SNx4HC138 3 ライン入力 8 ライン出力、デコーダ / デマルチプレクサ

1 特長

- 特に高速メモリ・デコーダおよびデータ伝送システム向け
- 広い動作電圧範囲:2V～6V
- 出力は最大 10 個の LSTTL 負荷を駆動可能
- 低消費電力、最大 I_{CC}:80μA
- t_{pd} = 15ns (標準値)
- 5V で ±4mA の出力駆動能力
- 低い入力電流:1μA (最大値)
- アクティブ LOW の出力 (選択された出力が LOW)
- 3 つのイネーブル入力を備え、カスケード接続やデータ受信を簡素化

2 アプリケーション

- LED ディスプレイ
- サーバー
- 白物家電
- 電力インフラストラクチャ
- ビル・オートメーション
- ファクトリ・オートメーション

3 概要

SNx4HC138 デバイスは、伝搬遅延時間を極めて短くする必要がある、高性能メモリ・デコーディングやデータ・ルーティングの用途に適しています。高性能メモリ・システムでは、このデコーダを使用することにより、システム・デコードの影響を最小限にとどめられます。高速イネーブル回路を使用する高速メモリと組み合わせた場合、このデコーダの遅延時間とメモリのイネーブル時間は、通例、メモリの標準的なアクセス時間を下回ります。すなわち、このデコーダによる実質的なシステム遅延時間は無視できるということです。

製品情報

部品番号	パッケージ (1)	本体サイズ (公称)
SN74HC138D	SOIC (16)	9.90mm × 3.90mm
SN74HC13DB	SSOP (16)	6.20mm × 5.30mm
SN74HC138N	PDIP (16)	19.32mm × 6.35mm
SN74HC138NS	SO (16)	10.20mm × 5.30mm
SN74HC138PW	TSSOP (16)	5.00mm × 4.40mm
SN54HC138J	CDIP (16)	21.34mm × 6.92mm
SN54HC138W	CFP (16)	10.16mm × 6.73mm
SN54HC138FK	LCCC (20)	8.89mm × 8.89mm

(1) 利用可能なすべてのパッケージについては、このデータシートの末尾にある注文情報を参照してください。

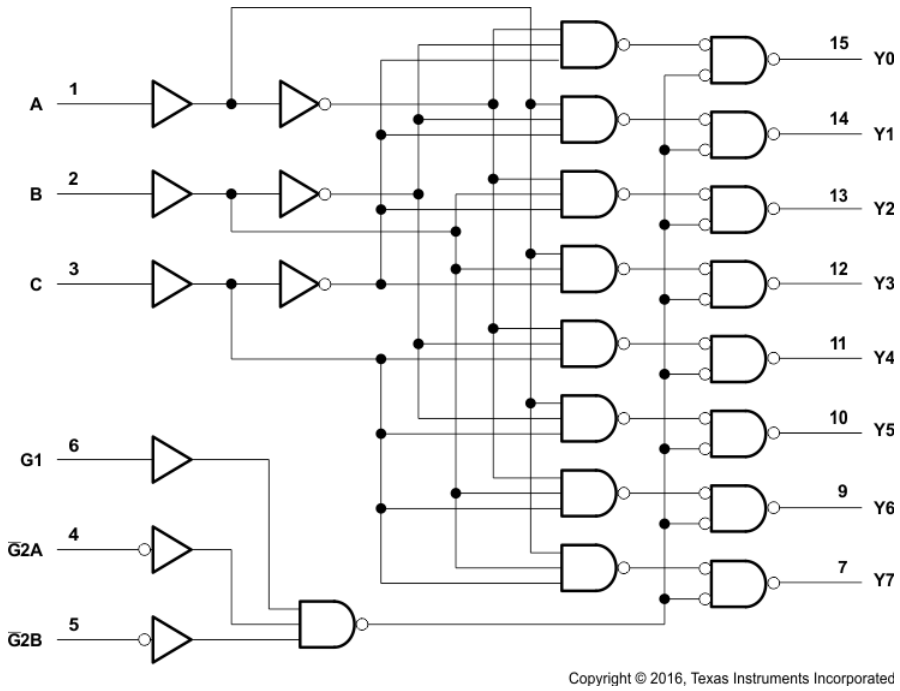

ここに示すピン番号は D、DB、J、N、NS、PW、W の各パッケージのものです。

機能ブロック図

英語版の TI 製品についての情報を翻訳したこの資料は、製品の概要を確認する目的で便宜的に提供しているものです。該当する正式な英語版の最新情報は、www.ti.com で閲覧でき、その内容が常に優先されます。TI では翻訳の正確性および妥当性につきましては一切保証いたしません。実際の設計などの前には、必ず最新版の英語版をご参照くださいますようお願いいたします。

Table of Contents

1 特長 1
2 アプリケーション 1
3 概要 1
4 Revision History 2
5 Pin Configuration and Functions 3
Pin Functions 3
6 Specifications 4
6.1 Absolute Maximum Ratings 4
6.2 ESD Ratings: SN74HC138 4
6.3 Recommended Operating Conditions 4
6.4 Thermal Information: SN74HC138 5
6.5 Thermal Information: SN54HC138 5
6.6 Electrical Characteristics 5
6.7 Electrical Characteristics: SN74HC138 6
6.8 Electrical Characteristics: SN54HC138 6
6.9 Switching Characteristics 6
6.10 Switching Characteristics: SN74HC138 7
6.11 Switching Characteristics: SN54HC138 7
6.12 Typical Characteristic 7
7 Parameter Measurement Information 8
8 Detailed Description 9
8.1 Overview 9
8.2 Functional Block Diagram 9
8.3 Feature Description 9
8.4 Device Functional Modes 10
9 Application and Implementation 11
9.1 Application Information 11
9.2 Typical Application 11
10 Power Supply Recommendations 12
11 Layout 12
11.1 Layout Guidelines 12
11.2 Layout Example 12
12 Device and Documentation Support 13
12.1 Documentation Support 13
12.2 Related Links 13
12.3 Receiving Notification of Documentation Updates 13
12.4 Support Resources 13
12.5 Trademarks 13
12.6 Electrostatic Discharge Caution 13
12.7 Glossary 13
13 Mechanical, Packaging, and Orderable Information 13

4 Revision History

資料番号末尾の英字は改訂を表しています。その改訂履歴は英語版に準じています。

Changes from Revision E (September 2003) to Revision F (September 2016)	Page
• 「*ESD 定格*」表、「*機能説明*」セクション、「*デバイスの機能モード*」セクション、「*アプリケーションと実装*」セクション、「*電源に関する推奨事項*」セクション、「*レイアウト*」セクション、「*デバイスおよびドキュメントのサポート*」セクション、「*メカニカル、パッケージ、および注文情報*」セクションを追加。	1
• 「注文情報」表を削除 (データシートの末尾にある POA を参照)	1
• Changed $R_{\theta JA}$ values from 73 to 87.3 (D), from 82 to 104.3 (DB), from 67 to 54.8 (N), from 64 to 91.1 (NS), and from 108 to 114.6 (PW)	5

Changes from Revision F (September 2016) to Revision G (October 2021)	Page
• Updated the ESD ratings table to fit modern data sheet standards	4

Copyright © 2021 Texas Instruments Incorporated

5 Pin Configuration and Functions

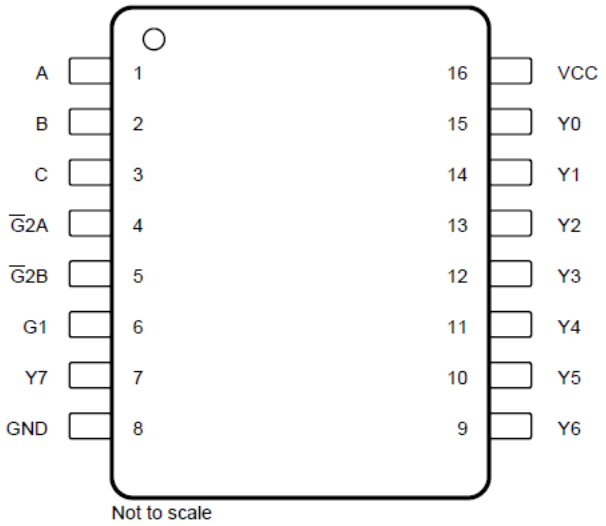

SOIC, SSOP, PDIP, SO, TSSOP, CDIP, or CFP Package
16-Pin D, DB, N, NS, PW, J or W
Top View

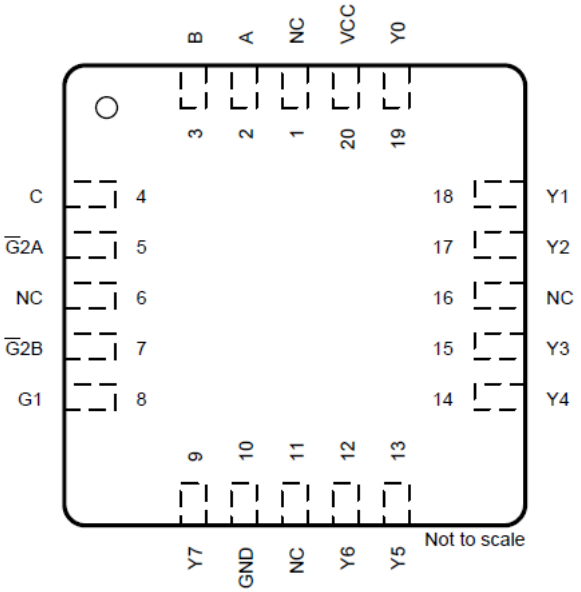

NC: No internal connection

LCCC Package
20-Pin FK
Top View

Pin Functions

PIN			I/O[(1)]	DESCRIPTION
NAME	SOIC, SSOP, PDIP, SO, TSSOP, CDIP, CFP	LCCC		
A	1	2	I	Select input A (least significant bit)
B	2	3	I	Select input B
C	3	4	I	Select input C (most significant bit)
$\overline{G}$2A	4	5	I	Active low enable A
$\overline{G}$2B	5	7	I	Active low enable B
G1	6	8	I	Active high enable
GND	8	10	—	Ground
NC	—	1, 6, 11, 16	—	No internal connection
V_{CC}	16	20	—	Supply voltage
Y0	15	19	O	Output 0 (least significant bit)
Y1	14	18	O	Output 1
Y2	13	17	O	Output 2
Y3	12	15	O	Output 3
Y4	11	14	O	Output 4
Y5	10	13	O	Output 5
Y6	9	12	O	Output 6
Y7	7	9	O	Output 7 (most significant bit)

(1) Signal Types: I = Input, O = Output, I/O = Input or Output.

Copyright © 2021 Texas Instruments Incorporated

6 Specifications

6.1 Absolute Maximum Ratings

over operating free-air temperature range (unless otherwise noted)[1]

			MIN	MAX	UNIT
V_{CC}	Supply voltage range		–0.5	7	V
I_{IK}	Input clamp current[2]	$V_I < 0$ or $V_I > V_{CC}$		±20	mA
I_{OK}	Output clamp current[2]	$V_O < 0$ or $V_O > V_{CC}$		±20	mA
I_O	Continuous output current	$V_O = 0$ to V_{CC}		±25	mA
	Continuous current through V_{CC} or GND			±50	mA
T_J	Junction temperature			150	°C
T_{stg}	Storage temperature		–65	150	°C

(1) Stresses beyond those listed under *Absolute Maximum Ratings* may cause permanent damage to the device. These are stress ratings only, which do not imply functional operation of the device at these or any other conditions beyond those indicated under *Recommended Operating Conditions*. Exposure to absolute-maximum-rated conditions for extended periods may affect device reliability.
(2) The input and output voltage ratings may be exceeded if the input and output current ratings are observed.

6.2 ESD Ratings: SN74HC138

			VALUE	UNIT
$V_{(ESD)}$	Electrostatic discharge	Human-body model (HBM), per ANSI/ESDA/JEDEC JS-001[1]	±2000	V
		Charged device model (CDM), per ANSI/ESDA/JEDEC JS-002[2]	±1000	

(1) JEDEC document JEP155 states that 500-V HBM allows safe manufacturing with a standard ESD control process.
(2) JEDEC document JEP157 states that 250-V CDM allows safe manufacturing with a standard ESD control process.

6.3 Recommended Operating Conditions

over operating free-air temperature range (unless otherwise noted)[1]

			MIN	NOM	MAX	UNIT
V_{CC}	Supply voltage		2	5	6	V
V_{IH}	High-level input voltage	V_{CC} = 2 V	1.5			V
		V_{CC} = 4.5 V	3.15			
		V_{CC} = 6 V	4.2			
V_{IL}	Low-level input voltage	V_{CC} = 2 V			0.5	V
		V_{CC} = 4.5 V			1.35	
		V_{CC} = 6 V			1.8	
V_I	Input voltage		0		V_{CC}	V
V_O	Output voltage		0		V_{CC}	V
Δt/Δv	Input transition rise or fall time	V_{CC} = 2 V			1000	ns
		V_{CC} = 4.5 V			500	
		V_{CC}= 6 V			400	
C_{pd}	Power dissipation capacitance (no load)			85		pF
T_A	Operating free-air temperature	SN54HC138	–55		125	°C
		SN74HC138	–40		85	

(1) All unused inputs of the device must be held at V_{CC} or GND to ensure proper device operation. See TI application report, *Implications of Slow or Floating CMOS Inputs* (SCBA004).

Copyright © 2021 Texas Instruments Incorporated

6.4 Thermal Information: SN74HC138

THERMAL METRIC[1]		SN74HC138					UNIT
		D (SOIC)	DB (SSOP)	N (PDIP)	NS (SO)	PW (TSSOP)	
		16 PINS	16 PINS	16 PINS	16 PINS	16 PINS	
$R_{\theta JA}$	Junction-to-ambient thermal resistance	87.3	104.3	54.8	91.1	141.6	°C/W
$R_{\theta JC(top)}$	Junction-to-case (top) thermal resistance	45.8	54.7	42.1	49.5	49.5	°C/W
$R_{\theta JB}$	Junction-to-board thermal resistance	44.8	54.9	34.8	51.5	59.6	°C/W
ψ_{JT}	Junction-to-top characterization parameter	14.2	17.7	27	17.8	6.9	°C/W
ψ_{JB}	Junction-to-board characterization parameter	44.5	54.4	34.7	51.2	59.1	°C/W

(1) For more information about traditional and new thermal metrics, see the *Semiconductor and IC Package Thermal Metrics* application report.

6.5 Thermal Information: SN54HC138

THERMAL METRIC[1]		SN54HC138[2]			UNIT
		J (CDIP)	W (CFP)	FK (LCCC)	
		16 PINS	16 PINS	20 PINS	
$R_{\theta JA}$	Junction-to-ambient thermal resistance	—	—	—	°C/W
$R_{\theta JC(top)}$	Junction-to-case (top) thermal resistance	45.4	68.1	49	°C/W
$R_{\theta JB}$	Junction-to-board thermal resistance	—	118.4	47.7	°C/W
ψ_{JT}	Junction-to-top characterization parameter	—	—	7.2	°C/W
ψ_{JB}	Junction-to-board characterization parameter	62.5	—	—	°C/W
$R_{\theta JC(bot)}$	Junction-to-case (bottom) thermal resistance	17.7	9	—	°C/W

(1) For more information about traditional and new thermal metrics, see the *Semiconductor and IC Package Thermal Metrics* application report.
(2) $R_{\theta JC}$ follows MIL-STD-883, and $R_{\theta JB}$ follows JESD51.

6.6 Electrical Characteristics

T_A = 25°C (unless otherwise noted)

PARAMETER	TEST CONDITIONS			MIN	TYP	MAX	UNIT
V_{OH}	$V_I = V_{IH}$ or V_{IL}	I_{OH} = –20 µA	V_{CC} = 2 V	1.9	1.998		V
			V_{CC} = 4.5 V	4.4	4.499		
			V_{CC} = 6 V	5.9	5.999		
		I_{OH} = –4 mA, V_{CC} = 4.5 V		3.98	4.3		
		I_{OH}= –5.2 mA, V_{CC} = 6 V		5.48	5.8		
V_{OL}	$V_I = V_{IH}$ or V_{IL}	I_{OL} = 20 µA	V_{CC} = 2 V		0.002	0.1	V
			V_{CC} = 4.5 V		0.001	0.1	
			V_{CC} = 6 V		0.001	0.1	
		I_{OL} = 4 mA, V_{CC} = 4.5 V			0.17	0.26	
		I_{OL} = 5.2 mA, V_{CC} = 6 V			0.15	0.26	
I_I	$V_I = V_{CC}$ or 0, V_{CC} = 6 V				±0.1	±100	nA
I_{CC}	$V_I = V_{CC}$ or 0, I_O = 0, V_{CC} = 6 V					8	µA
C_i	V_{CC} = 2 V to 6 V				3	10	pF

6.7 Electrical Characteristics: SN74HC138

over operating free-air temperature range (unless otherwise noted)

PARAMETER	TEST CONDITIONS			MIN	TYP	MAX	UNIT
V_{OH}	$V_I = V_{IH}$ or V_{IL}	$I_{OH} = –20$ µA	$V_{CC} = 2$ V	1.9			V
			$V_{CC} = 4.5$ V	4.4			
			$V_{CC} = 6$ V	5.9			
		$I_{OH} = –4$ mA, $V_{CC} = 4.5$ V		3.84			
		$I_{OH} = –5.2$ mA, $V_{CC} = 6$ V		5.34			
V_{OL}	$V_I = V_{IH}$ or V_{IL}	$I_{OL} = 20$ µA	$V_{CC} = 2$ V			0.1	V
			$V_{CC} = 4.5$ V			0.1	
			$V_{CC} = 6$ V			0.1	
		$I_{OL} = 4$ mA, $V_{CC} = 4.5$ V				0.33	
		$I_{OL} = 5.2$ mA, $V_{CC} = 6$ V				0.33	
I_I	$V_I = V_{CC}$ or 0, $V_{CC} = 6$ V					±1000	nA
I_{CC}	$V_I = V_{CC}$ or 0, $I_O = 0$, $V_{CC} = 6$ V					80	µA
C_i	$V_{CC} = 2$ V to 6 V					10	pF

6.8 Electrical Characteristics: SN54HC138

over operating free-air temperature range (unless otherwise noted)

PARAMETER	TEST CONDITIONS		V_{CC}	MIN	TYP	MAX	UNIT
V_{OH}	$V_I = V_{IH}$ or V_{IL}	$I_{OH} = –20$ µA	$V_{CC} = 2$ V	1.9			V
			$V_{CC} = 4.5$ V	4.4			
			$V_{CC} = 6$ V	5.9			
		$I_{OH} = –4$ mA, $V_{CC} = 4.5$ V		3.7			
		$I_{OH} = –5.2$ mA, $V_{CC} = 6$ V		5.2			
V_{OL}	$V_I = V_{IH}$ or V_{IL}	$I_{OL} = 20$ µA	$V_{CC} = 2$ V			0.1	V
			$V_{CC} = 4.5$ V			0.1	
			$V_{CC} = 6$ V			0.1	
		$I_{OL} = 4$ mA, $V_{CC} = 4.5$ V				0.4	
		$I_{OL} = 5.2$ mA, $V_{CC} = 6$ V				0.4	
I_I	$V_I = V_{CC}$ or 0, $V_{CC} = 6$ V					±1000	nA
I_{CC}	$V_I = V_{CC}$ or 0, $I_O = 0$, $V_{CC} = 6$ V					160	µA
C_i	$V_{CC} = 2$ V to 6 V					10	pF

6.9 Switching Characteristics

$T_A = 25°C$ and $C_L = 50$ pF (unless otherwise noted; see *セクション 7*)

PARAMETER	TEST CONDITIONS		MIN	TYP	MAX	UNIT
t_{pd}	From A, B, or C (input) to any Y (output)	$V_{CC} = 2$ V		67	180	ns
		$V_{CC} = 4.5$ V		18	36	
		$V_{CC} = 6$ V		15	31	
	From enable (input) to any Y (output)	$V_{CC} = 2$ V		66	155	
		$V_{CC} = 4.5$ V		18	31	
		$V_{CC} = 6$ V		15	26	
t_t	To any output	$V_{CC} = 2$ V		38	75	ns
		$V_{CC} = 4.5$ V		8	15	
		$V_{CC} = 6$ V		6	13	

Copyright © 2021 Texas Instruments Incorporated

6.10 Switching Characteristics: SN74HC138

over recommended operating free-air temperature range and C_L = 50 pF (unless otherwise noted; see セクション 7)

PARAMETER	TEST CONDITIONS		MIN	TYP	MAX	UNIT
t_{pd}	From A, B, or C (input) to any Y (output)	V_{CC} = 2 V			225	ns
		V_{CC} = 4.5 V			45	
		V_{CC} = 6 V			38	
	From enable (input) to any Y (output)	V_{CC} = 2 V			195	
		V_{CC} = 4.5 V			39	
		V_{CC} = 6 V			33	
t_t	To any output	V_{CC} = 2 V			95	ns
		V_{CC} = 4.5 V			19	
		V_{CC} = 6 V			16	

6.11 Switching Characteristics: SN54HC138

over recommended operating free-air temperature range and C_L = 50 pF (unless otherwise noted; see セクション 7)

PARAMETER	TEST CONDITIONS		MIN	TYP	MAX	UNIT
t_{pd}	From A, B, or C (input) to any Y (output)	V_{CC} = 2 V			270	ns
		V_{CC} = 4.5 V			54	
		V_{CC} = 6 V			46	
	From enable (input) to any Y (output)	V_{CC} = 2 V			235	
		V_{CC} = 4.5 V			47	
		V_{CC} = 6 V			40	
t_t	To any output	V_{CC} = 2 V			110	ns
		V_{CC} = 4.5 V			22	
		V_{CC} = 6 V			19	

6.12 Typical Characteristic

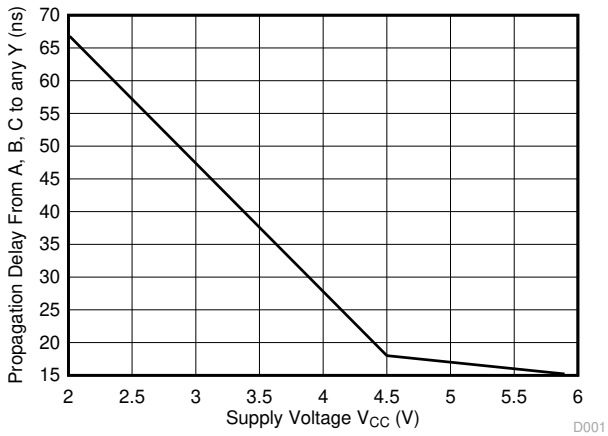

図 6-1. Typical Propagation Delay vs Supply Voltage

7 Parameter Measurement Information

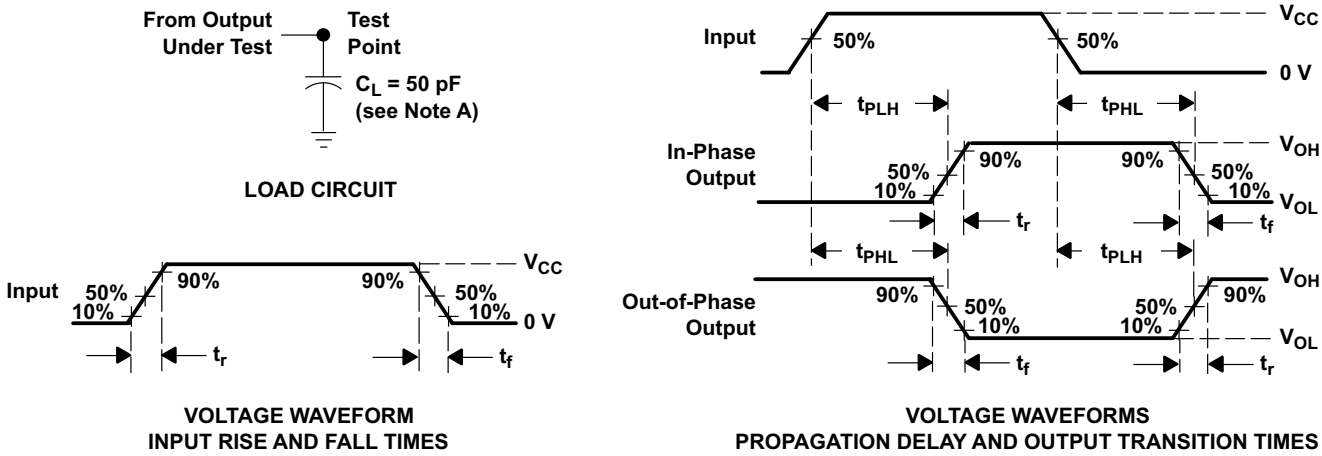

NOTES: A. C_L includes probe and test-fixture capacitance.
B. Phase relationships between waveforms were chosen arbitrarily. All input pulses are supplied by generators having the following characteristics: PRR ≤ 1 MHz, Z_O = 50 Ω, t_r = 6 ns, t_f = 6 ns.
C. The outputs are measured one at a time with one input transition per measurement.
D. t_{PLH} and t_{PHL} are the same as t_{pd}.

図 7-1. Load Circuit and Voltage Waveforms

Copyright © 2021 Texas Instruments Incorporated

8 Detailed Description

8.1 Overview

The SNx4HC138 devices are 3-to-8 decoders and demultiplexers. The three input pins, A, B, and C, select which output is active. The selected output is pulled LOW, while the remaining outputs are all HIGH. The conditions at the binary-select inputs at the three enable inputs select one of eight output lines. Two active-low and one active-high enable inputs reduce the requirement for external gates or inverters when expanding. A 24-line decoder can be implemented without external inverters, and a 32-line decoder requires only one inverter. An enable input can be used as a data input for demultiplexing applications.

8.2 Functional Block Diagram

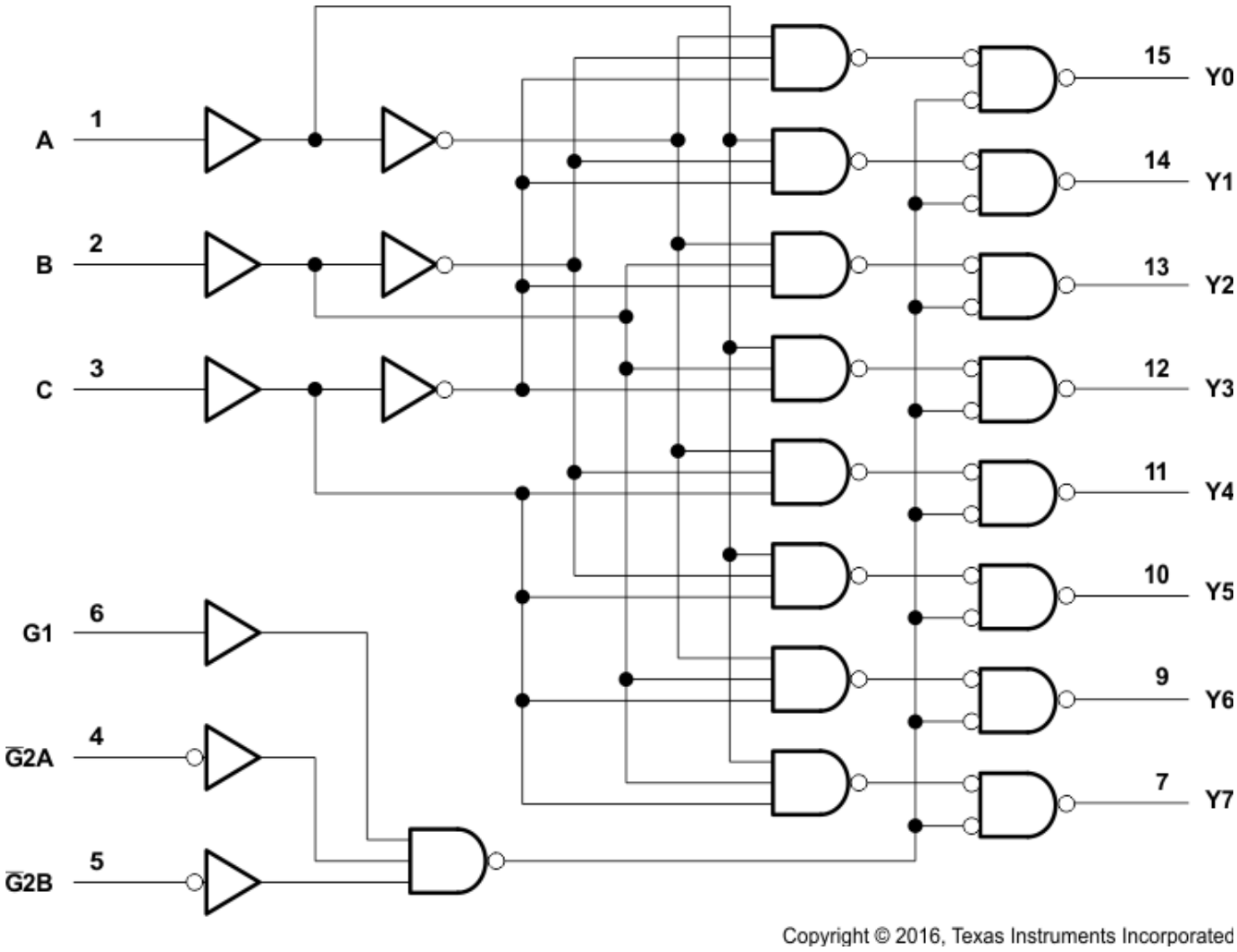

Pin numbers shown are for the D, DB, J, N, NS, PW, and W packages.

8.3 Feature Description

This device features three binary inputs to select a single active-low output. Three enable pins are also available to enable or disable the outputs. One active high enable and two active low enable pins are available, and any enable pin can be deactivated to force all outputs high. All three enable pins must be active for the output to be enabled.

8.4 Device Functional Modes

表 8-1 lists the functions of the SNx4HC138 devices.

表 8-1. Function Table

INPUTS						OUTPUTS							
ENABLE			SELECT										
G1	$\overline{G2A}$	$\overline{G2B}$	C	B	A	Y0	Y1	Y2	Y3	Y4	Y5	Y6	Y7
X	H	X	X	X	X	H	H	H	H	H	H	H	H
X	X	H	X	X	X	H	H	H	H	H	H	H	H
L	X	X	X	X	X	H	H	H	H	H	H	H	H
H	L	L	L	L	L	L	H	H	H	H	H	H	H
H	L	L	L	L	H	H	L	H	H	H	H	H	H
H	L	L	L	H	L	H	H	L	H	H	H	H	H
H	L	L	L	H	H	H	H	H	L	H	H	H	H
H	L	L	H	L	L	H	H	H	H	L	H	H	H
H	L	L	H	L	H	H	H	H	H	H	L	H	H
H	L	L	H	H	L	H	H	H	H	H	H	L	H
H	L	L	H	H	H	H	H	H	H	H	H	H	L

Copyright © 2021 Texas Instruments Incorporated

9 Application and Implementation

Note

以下のアプリケーション情報は、TI の製品仕様に含まれるものではなく、TI ではその正確性または完全性を保証いたしません。個々の目的に対する製品の適合性については、お客様の責任で判断していただくことになります。また、お客様は自身の設計実装を検証しテストすることで、システムの機能を確認する必要があります。

9.1 Application Information

The SN74HC138 is useful as a scanning column selector for an LED Matrix display as it can be used for the low side drive of the LED string. The decoder functionality ensures that no more than one output is pulled to a low-level logic voltage so that only a single column is enabled at any point in time.

9.2 Typical Application

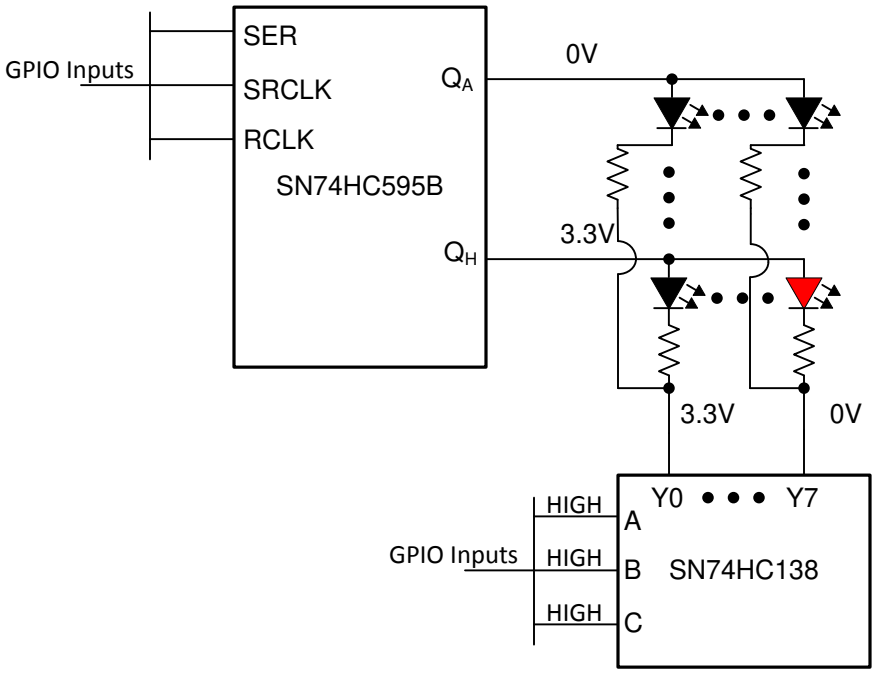

Copyright © 2016, Texas Instruments Incorporated

図 9-1. LED Matrix Driver Application

9.2.1 Design Requirements

These devices use CMOS technology and have balanced output drive. Take care to avoid bus contention because it can drive currents that would exceed maximum limits. The high drive also creates fast edges into light loads, so routing and load conditions must be considered to prevent ringing.

9.2.2 Detailed Design Procedure

1. Recommended Input Conditions
   - For switch time specifications, see propagation delay times in *セクション 6.9*.
   - For input voltage level specifications for control inputs, see V_{IH} and V_{IL} in *セクション 6.6*.
2. Recommended Output Conditions
   - Outputs must not be pulled above V_{CC} or below GND.

9.2.3 Application Curve

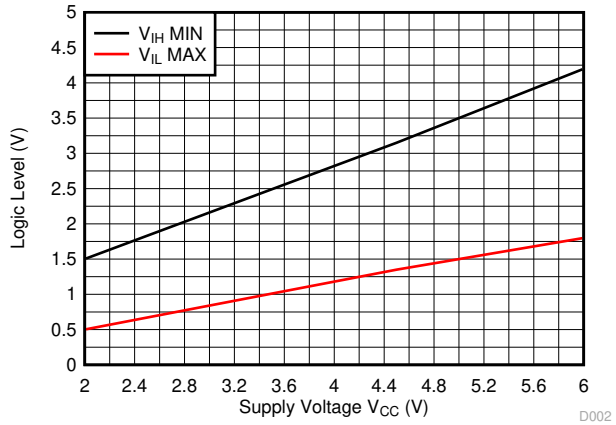

図 9-2. Input High and Input Low Thresholds vs Supply Voltage

10 Power Supply Recommendations

The power supply can be any voltage between the minimum and maximum supply voltage rating located in the *セクション 6.3*.

Each V_{CC} terminal must have a good bypass capacitor to prevent power disturbance. A 0.1-μF bypass capacitor is recommended to be placed close to the V_{CC} terminal. It is acceptable to parallel multiple bypass capacitors to reject different frequencies of noise; 0.1-μF and 1-μF capacitors are commonly used in parallel. The bypass capacitor must be installed as close to the power terminal as possible for best results.

11 Layout

11.1 Layout Guidelines

Reflections and matching are closely related to loop antenna theory, but different enough to warrant their own discussion. When a PCB trace turns a corner at a 90° angle, a reflection can occur. This is primarily due to the change of width of the trace. At the apex of the turn, the trace width is increased to 1.414 times its width. This upsets the transmission line characteristics, especially the distributed capacitance and self–inductance of the trace (resulting in the reflection). It is a given that not all PCB traces can be straight, and so they have to turn corners. 図 11-1 shows progressively better techniques of rounding corners. Only the last example maintains constant trace width and minimizes reflections.

11.2 Layout Example

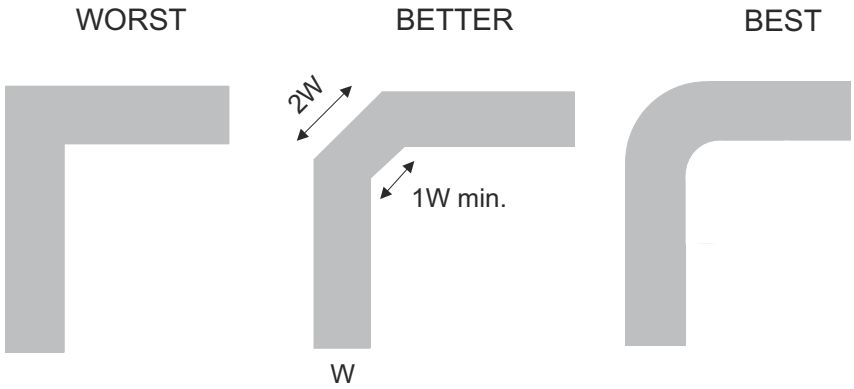

図 11-1. Trace Example

Copyright © 2021 Texas Instruments Incorporated

12 Device and Documentation Support

12.1 Documentation Support

12.1.1 Related Documentation

For related documentation see the following:

Implications of Slow or Floating CMOS Inputs (SCBA004)

12.2 Related Links

The table below lists quick access links. Categories include technical documents, support and community resources, tools and software, and quick access to sample or buy.

表 12-1. Related Links

PARTS	PRODUCT FOLDER	SAMPLE & BUY	TECHNICAL DOCUMENTS	TOOLS & SOFTWARE	SUPPORT & COMMUNITY
SN54HC138	Click here	Click here	Click here	Click here	Click here
SN74HC138	Click here	Click here	Click here	Click here	Click here

12.3 Receiving Notification of Documentation Updates

To receive notification of documentation updates, navigate to the device product folder on ti.com. In the upper right corner, click on *Alert me* to register and receive a weekly digest of any product information that has changed. For change details, review the revision history included in any revised document.

12.4 Support Resources

TI E2E™ support forums are an engineer's go-to source for fast, verified answers and design help — straight from the experts. Search existing answers or ask your own question to get the quick design help you need.

Linked content is provided "AS IS" by the respective contributors. They do not constitute TI specifications and do not necessarily reflect TI's views; see TI's Terms of Use.

12.5 Trademarks

TI E2E™ is a trademark of Texas Instruments.
すべての商標は、それぞれの所有者に帰属します。

12.6 Electrostatic Discharge Caution

This integrated circuit can be damaged by ESD. Texas Instruments recommends that all integrated circuits be handled with appropriate precautions. Failure to observe proper handling and installation procedures can cause damage.

ESD damage can range from subtle performance degradation to complete device failure. Precision integrated circuits may be more susceptible to damage because very small parametric changes could cause the device not to meet its published specifications.

12.7 Glossary

TI Glossary This glossary lists and explains terms, acronyms, and definitions.

13 Mechanical, Packaging, and Orderable Information

The following pages include mechanical, packaging, and orderable information. This information is the most current data available for the designated devices. This data is subject to change without notice and revision of this document. For browser-based versions of this data sheet, refer to the left-hand navigation.

PACKAGING INFORMATION

Orderable part number	Status (1)	Material type (2)	Package | Pins	Package qty | Carrier	RoHS (3)	Lead finish/ Ball material (4)	MSL rating/ Peak reflow (5)	Op temp (°C)	Part marking (6)
5962-8406201VEA	Active	Production	CDIP (J) | 16	25 | TUBE	No	SNPB	N/A for Pkg Type	-55 to 125	5962-8406201VE A SNV54HC138J
5962-8406201VEA.A	Active	Production	CDIP (J) | 16	25 | TUBE	No	SNPB	N/A for Pkg Type	-55 to 125	5962-8406201VE A SNV54HC138J
5962-8406201VFA	Active	Production	CFP (W) | 16	25 | TUBE	No	SNPB	N/A for Pkg Type	-55 to 125	5962-8406201VF A SNV54HC138W
5962-8406201VFA.A	Active	Production	CFP (W) | 16	25 | TUBE	No	SNPB	N/A for Pkg Type	-55 to 125	5962-8406201VF A SNV54HC138W
84062012A	Active	Production	LCCC (FK) | 20	55 | TUBE	No	SNPB	N/A for Pkg Type	-55 to 125	84062012A SNJ54HC 138FK
8406201EA	Active	Production	CDIP (J) | 16	25 | TUBE	No	SNPB	N/A for Pkg Type	-55 to 125	8406201EA SNJ54HC138J
8406201FA	Active	Production	CFP (W) | 16	25 | TUBE	No	SNPB	N/A for Pkg Type	-55 to 125	8406201FA SNJ54HC138W
JM38510/65802B2A	Active	Production	LCCC (FK) | 20	55 | TUBE	No	SNPB	N/A for Pkg Type	-55 to 125	JM38510/ 65802B2A
JM38510/65802B2A.A	Active	Production	LCCC (FK) | 20	55 | TUBE	No	SNPB	N/A for Pkg Type	-55 to 125	JM38510/ 65802B2A
JM38510/65802BEA	Active	Production	CDIP (J) | 16	25 | TUBE	No	SNPB	N/A for Pkg Type	-55 to 125	JM38510/ 65802BEA
JM38510/65802BEA.A	Active	Production	CDIP (J) | 16	25 | TUBE	No	SNPB	N/A for Pkg Type	-55 to 125	JM38510/ 65802BEA
M38510/65802B2A	Active	Production	LCCC (FK) | 20	55 | TUBE	No	SNPB	N/A for Pkg Type	-55 to 125	JM38510/ 65802B2A
M38510/65802BEA	Active	Production	CDIP (J) | 16	25 | TUBE	No	SNPB	N/A for Pkg Type	-55 to 125	JM38510/ 65802BEA
SN54HC138J	Active	Production	CDIP (J) | 16	25 | TUBE	No	SNPB	N/A for Pkg Type	-55 to 125	SN54HC138J
SN54HC138J.A	Active	Production	CDIP (J) | 16	25 | TUBE	No	SNPB	N/A for Pkg Type	-55 to 125	SN54HC138J
SN74HC138D	Obsolete	Production	SOIC (D) | 16	-	-	Call TI	Call TI	-40 to 85	HC138

Orderable part number	Status (1)	Material type (2)	Package | Pins	Package qty | Carrier	RoHS (3)	Lead finish/ Ball material (4)	MSL rating/ Peak reflow (5)	Op temp (°C)	Part marking (6)
SN74HC138DBR	Active	Production	SSOP (DB) | 16	2000 | LARGE T&R	Yes	NIPDAU	Level-1-260C-UNLIM	-40 to 85	HC138
SN74HC138DBR.A	Active	Production	SSOP (DB) | 16	2000 | LARGE T&R	Yes	NIPDAU	Level-1-260C-UNLIM	-40 to 85	HC138
SN74HC138DR	Active	Production	SOIC (D) | 16	2500 | LARGE T&R	Yes	NIPDAU | SN	Level-1-260C-UNLIM	-40 to 85	HC138
SN74HC138DR.A	Active	Production	SOIC (D) | 16	2500 | LARGE T&R	Yes	NIPDAU	Level-1-260C-UNLIM	-40 to 85	HC138
SN74HC138DRE4	Active	Production	SOIC (D) | 16	2500 | LARGE T&R	Yes	NIPDAU	Level-1-260C-UNLIM	-40 to 85	HC138
SN74HC138DRG4	Active	Production	SOIC (D) | 16	2500 | LARGE T&R	Yes	NIPDAU	Level-1-260C-UNLIM	-40 to 85	HC138
SN74HC138DRG4.A	Active	Production	SOIC (D) | 16	2500 | LARGE T&R	Yes	NIPDAU	Level-1-260C-UNLIM	-40 to 85	HC138
SN74HC138DT	Obsolete	Production	SOIC (D) | 16	-	-	Call TI	Call TI	-40 to 85	HC138
SN74HC138N	Active	Production	PDIP (N) | 16	25 | TUBE	Yes	NIPDAU	N/A for Pkg Type	-40 to 85	SN74HC138N
SN74HC138N.A	Active	Production	PDIP (N) | 16	25 | TUBE	Yes	NIPDAU	N/A for Pkg Type	-40 to 85	SN74HC138N
SN74HC138NE4	Active	Production	PDIP (N) | 16	25 | TUBE	Yes	NIPDAU	N/A for Pkg Type	-40 to 85	SN74HC138N
SN74HC138NSR	Active	Production	SOP (NS) | 16	2000 | LARGE T&R	Yes	NIPDAU	Level-1-260C-UNLIM	-40 to 85	HC138
SN74HC138NSR.A	Active	Production	SOP (NS) | 16	2000 | LARGE T&R	Yes	NIPDAU	Level-1-260C-UNLIM	-40 to 85	HC138
SN74HC138PW	Obsolete	Production	TSSOP (PW) | 16	-	-	Call TI	Call TI	-40 to 85	HC138
SN74HC138PWR	Active	Production	TSSOP (PW) | 16	2000 | LARGE T&R	Yes	NIPDAU | SN	Level-1-260C-UNLIM	-40 to 85	HC138
SN74HC138PWR.A	Active	Production	TSSOP (PW) | 16	2000 | LARGE T&R	Yes	NIPDAU	Level-1-260C-UNLIM	-40 to 85	HC138
SN74HC138PWRG4	Active	Production	TSSOP (PW) | 16	2000 | LARGE T&R	Yes	NIPDAU	Level-1-260C-UNLIM	-40 to 85	HC138
SN74HC138PWRG4.A	Active	Production	TSSOP (PW) | 16	2000 | LARGE T&R	Yes	NIPDAU	Level-1-260C-UNLIM	-40 to 85	HC138
SN74HC138PWT	Obsolete	Production	TSSOP (PW) | 16	-	-	Call TI	Call TI	-40 to 85	HC138
SNJ54HC138FK	Active	Production	LCCC (FK) | 20	55 | TUBE	No	SNPB	N/A for Pkg Type	-55 to 125	84062012A SNJ54HC 138FK
SNJ54HC138FK.A	Active	Production	LCCC (FK) | 20	55 | TUBE	No	SNPB	N/A for Pkg Type	-55 to 125	84062012A SNJ54HC 138FK
SNJ54HC138J	Active	Production	CDIP (J) | 16	25 | TUBE	No	SNPB	N/A for Pkg Type	-55 to 125	8406201EA SNJ54HC138J
SNJ54HC138J.A	Active	Production	CDIP (J) | 16	25 | TUBE	No	SNPB	N/A for Pkg Type	-55 to 125	8406201EA SNJ54HC138J
SNJ54HC138W	Active	Production	CFP (W) | 16	25 | TUBE	No	SNPB	N/A for Pkg Type	-55 to 125	8406201FA SNJ54HC138W
SNJ54HC138W.A	Active	Production	CFP (W) | 16	25 | TUBE	No	SNPB	N/A for Pkg Type	-55 to 125	8406201FA SNJ54HC138W

(1) **Status:** For more details on status, see our product life cycle.

(2) **Material type:** When designated, preproduction parts are prototypes/experimental devices, and are not yet approved or released for full production. Testing and final process, including without limitation quality assurance, reliability performance testing, and/or process qualification, may not yet be complete, and this item is subject to further changes or possible discontinuation. If available for ordering, purchases will be subject to an additional waiver at checkout, and are intended for early internal evaluation purposes only. These items are sold without warranties of any kind.

(3) **RoHS values:** Yes, No, RoHS Exempt. See the TI RoHS Statement for additional information and value definition.

(4) **Lead finish/Ball material:** Parts may have multiple material finish options. Finish options are separated by a vertical ruled line. Lead finish/Ball material values may wrap to two lines if the finish value exceeds the maximum column width.

(5) **MSL rating/Peak reflow:** The moisture sensitivity level ratings and peak solder (reflow) temperatures. In the event that a part has multiple moisture sensitivity ratings, only the lowest level per JEDEC standards is shown. Refer to the shipping label for the actual reflow temperature that will be used to mount the part to the printed circuit board.

(6) **Part marking:** There may be an additional marking, which relates to the logo, the lot trace code information, or the environmental category of the part.

Multiple part markings will be inside parentheses. Only one part marking contained in parentheses and separated by a "~" will appear on a part. If a line is indented then it is a continuation of the previous line and the two combined represent the entire part marking for that device.

Important Information and Disclaimer: The information provided on this page represents TI's knowledge and belief as of the date that it is provided. TI bases its knowledge and belief on information provided by third parties, and makes no representation or warranty as to the accuracy of such information. Efforts are underway to better integrate information from third parties. TI has taken and continues to take reasonable steps to provide representative and accurate information but may not have conducted destructive testing or chemical analysis on incoming materials and chemicals. TI and TI suppliers consider certain information to be proprietary, and thus CAS numbers and other limited information may not be available for release.

In no event shall TI's liability arising out of such information exceed the total purchase price of the TI part(s) at issue in this document sold by TI to Customer on an annual basis.

OTHER QUALIFIED VERSIONS OF SN54HC138, SN54HC138-SP, SN74HC138 :

- Catalog : SN74HC138, SN54HC138
- Automotive : SN74HC138-Q1, SN74HC138-Q1
- Military : SN54HC138
- Space : SN54HC138-SP

NOTE: Qualified Version Definitions:

- Catalog - TI's standard catalog product
- Automotive - Q100 devices qualified for high-reliability automotive applications targeting zero defects
- Military - QML certified for Military and Defense Applications
- Space - Radiation tolerant, ceramic packaging and qualified for use in Space-based application

TAPE AND REEL INFORMATION

REEL DIMENSIONS

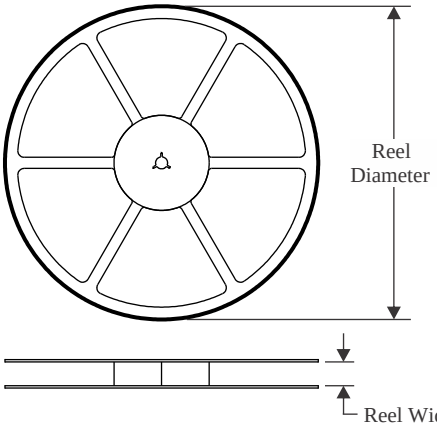

TAPE DIMENSIONS

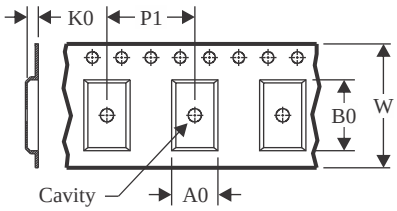

A0	Dimension designed to accommodate the component width
B0	Dimension designed to accommodate the component length
K0	Dimension designed to accommodate the component thickness
W	Overall width of the carrier tape
P1	Pitch between successive cavity centers

QUADRANT ASSIGNMENTS FOR PIN 1 ORIENTATION IN TAPE

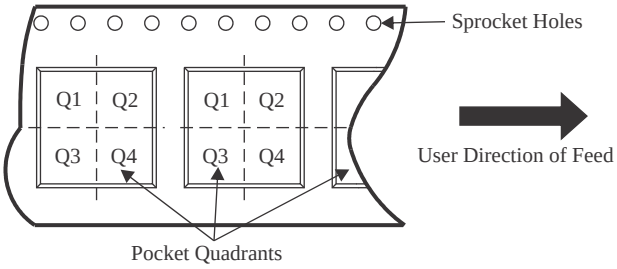

*All dimensions are nominal

Device	Package Type	Package Drawing	Pins	SPQ	Reel Diameter (mm)	Reel Width W1 (mm)	A0 (mm)	B0 (mm)	K0 (mm)	P1 (mm)	W (mm)	Pin1 Quadrant
SN74HC138DBR	SSOP	DB	16	2000	330.0	16.4	8.35	6.6	2.4	12.0	16.0	Q1
SN74HC138DR	SOIC	D	16	2500	330.0	16.4	6.5	10.3	2.1	8.0	16.0	Q1
SN74HC138DR	SOIC	D	16	2500	330.0	16.4	6.5	10.3	2.1	8.0	16.0	Q1
SN74HC138DRG4	SOIC	D	16	2500	330.0	16.4	6.5	10.3	2.1	8.0	16.0	Q1
SN74HC138NSR	SOP	NS	16	2000	330.0	16.4	8.45	10.55	2.5	12.0	16.2	Q1
SN74HC138PWR	TSSOP	PW	16	2000	330.0	12.4	6.9	5.6	1.6	8.0	12.0	Q1
SN74HC138PWR	TSSOP	PW	16	2000	330.0	12.4	6.9	5.6	1.6	8.0	12.0	Q1
SN74HC138PWR	TSSOP	PW	16	2000	330.0	12.4	6.9	5.3	1.6	8.0	12.0	Q1
SN74HC138PWRG4	TSSOP	PW	16	2000	330.0	12.4	6.9	5.6	1.6	8.0	12.0	Q1

TAPE AND REEL BOX DIMENSIONS

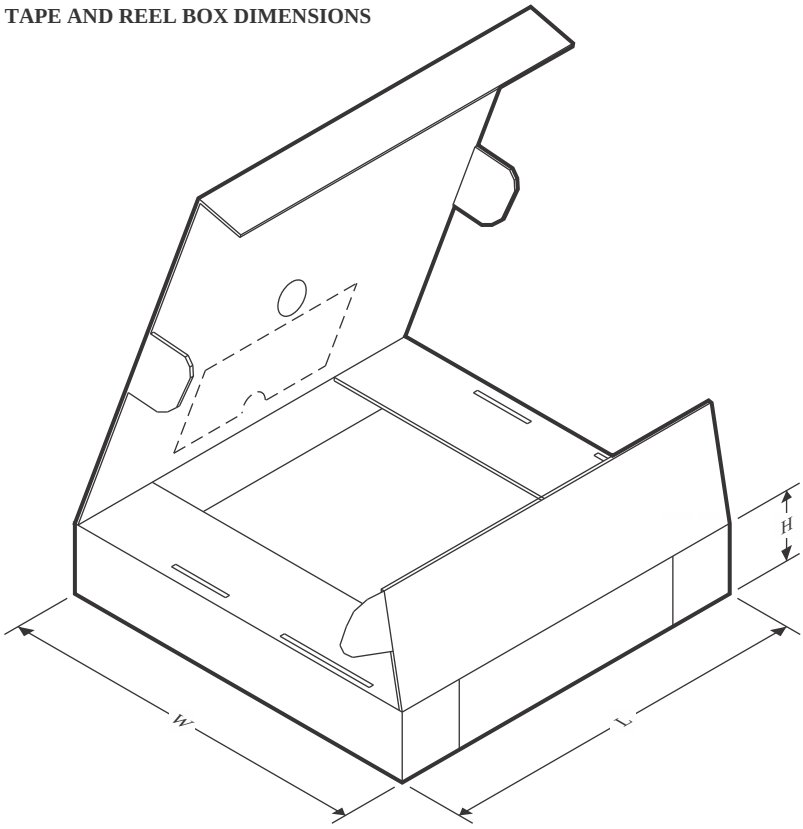

*All dimensions are nominal

Device	Package Type	Package Drawing	Pins	SPQ	Length (mm)	Width (mm)	Height (mm)
SN74HC138DBR	SSOP	DB	16	2000	353.0	353.0	32.0
SN74HC138DR	SOIC	D	16	2500	340.5	336.1	32.0
SN74HC138DR	SOIC	D	16	2500	340.5	336.1	32.0
SN74HC138DRG4	SOIC	D	16	2500	340.5	336.1	32.0
SN74HC138NSR	SOP	NS	16	2000	353.0	353.0	32.0
SN74HC138PWR	TSSOP	PW	16	2000	356.0	356.0	35.0
SN74HC138PWR	TSSOP	PW	16	2000	353.0	353.0	32.0
SN74HC138PWR	TSSOP	PW	16	2000	367.0	367.0	35.0
SN74HC138PWRG4	TSSOP	PW	16	2000	353.0	353.0	32.0

TUBE

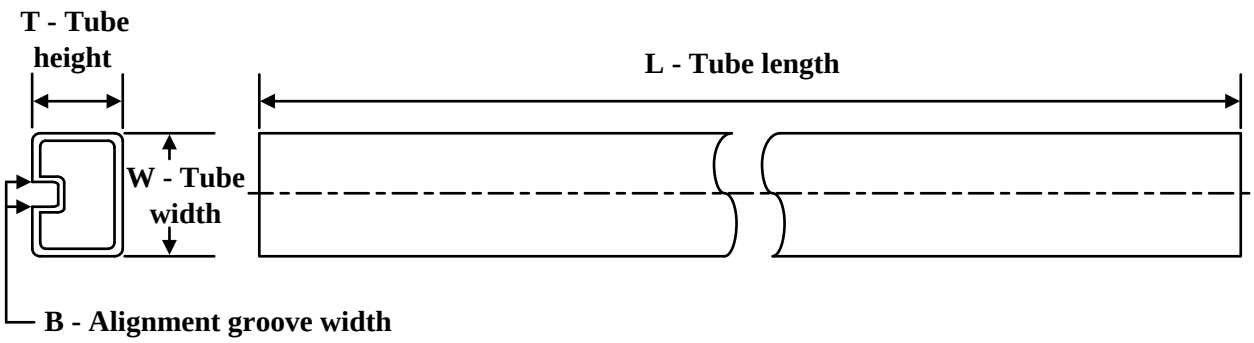

*All dimensions are nominal

Device	Package Name	Package Type	Pins	SPQ	L (mm)	W (mm)	T (µm)	B (mm)
5962-8406201VFA	W	CFP	16	25	506.98	26.16	6220	NA
5962-8406201VFA.A	W	CFP	16	25	506.98	26.16	6220	NA
84062012A	FK	LCCC	20	55	506.98	12.06	2030	NA
8406201FA	W	CFP	16	25	506.98	26.16	6220	NA
JM38510/65802B2A	FK	LCCC	20	55	506.98	12.06	2030	NA
JM38510/65802B2A.A	FK	LCCC	20	55	506.98	12.06	2030	NA
M38510/65802B2A	FK	LCCC	20	55	506.98	12.06	2030	NA
SN74HC138N	N	PDIP	16	25	506	13.97	11230	4.32
SN74HC138N	N	PDIP	16	25	506	13.97	11230	4.32
SN74HC138N.A	N	PDIP	16	25	506	13.97	11230	4.32
SN74HC138N.A	N	PDIP	16	25	506	13.97	11230	4.32
SN74HC138NE4	N	PDIP	16	25	506	13.97	11230	4.32
SN74HC138NE4	N	PDIP	16	25	506	13.97	11230	4.32
SNJ54HC138FK	FK	LCCC	20	55	506.98	12.06	2030	NA
SNJ54HC138FK.A	FK	LCCC	20	55	506.98	12.06	2030	NA
SNJ54HC138W	W	CFP	16	25	506.98	26.16	6220	NA
SNJ54HC138W.A	W	CFP	16	25	506.98	26.16	6220	NA

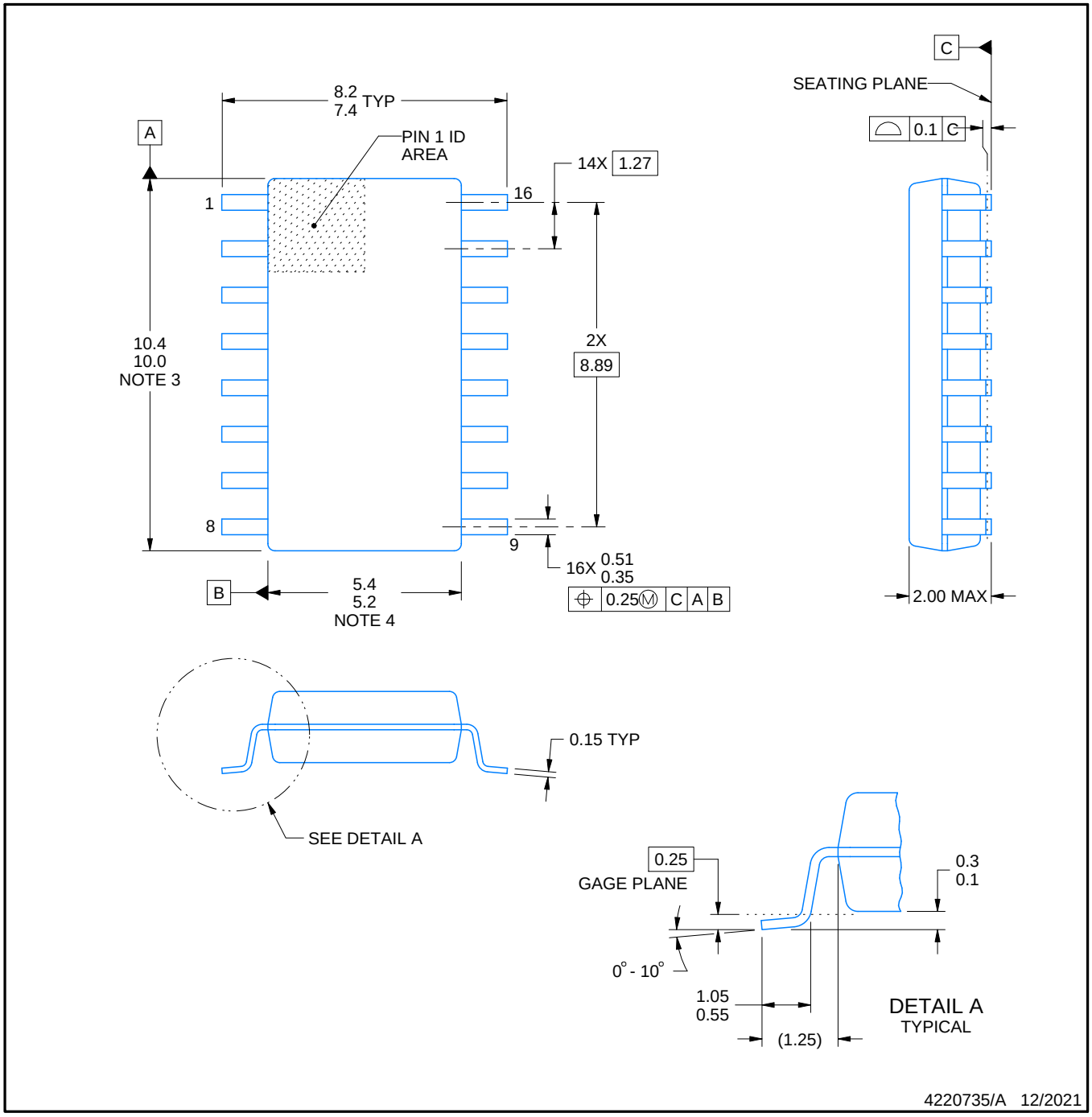

NOTES:

1. All linear dimensions are in millimeters. Dimensions in parenthesis are for reference only. Dimensioning and tolerancing per ASME Y14.5M.
2. This drawing is subject to change without notice.
3. This dimension does not include mold flash, protrusions, or gate burrs. Mold flash, protrusions, or gate burrs shall not exceed 0.15 mm, per side.
4. This dimension does not include interlead flash. Interlead flash shall not exceed 0.25 mm, per side.

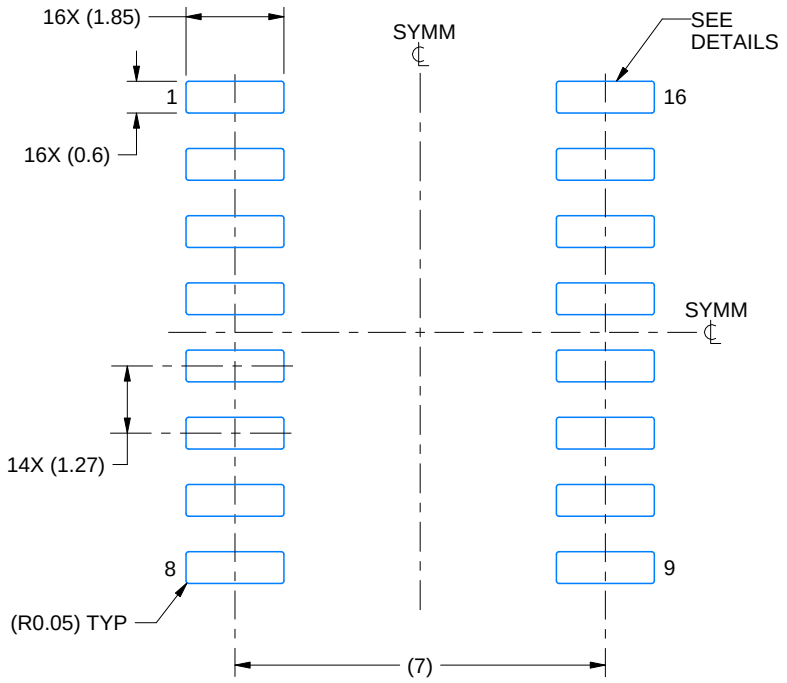

LAND PATTERN EXAMPLE
SCALE:7X

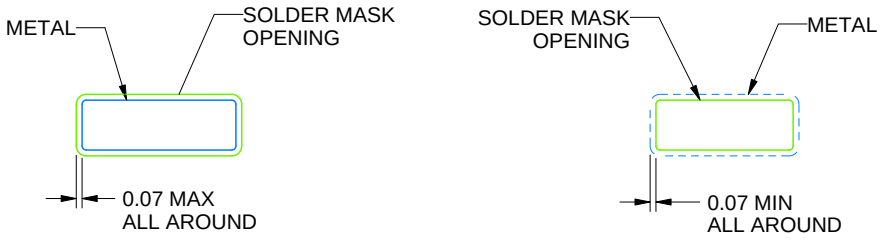

NON SOLDER MASK DEFINED

SOLDER MASK DEFINED

SOLDER MASK DETAILS

4220735/A 12/2021

NOTES: (continued)

5. Publication IPC-7351 may have alternate designs.
6. Solder mask tolerances between and around signal pads can vary based on board fabrication site.

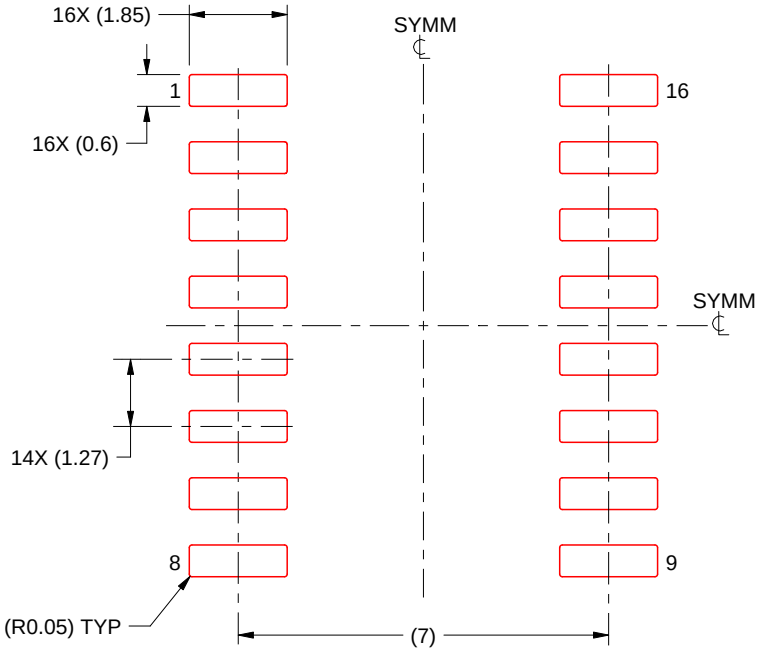

SOLDER PASTE EXAMPLE
BASED ON 0.125 mm THICK STENCIL
SCALE:7X

4220735/A 12/2021

NOTES: (continued)

7. Laser cutting apertures with trapezoidal walls and rounded corners may offer better paste release. IPC-7525 may have alternate design recommendations.
8. Board assembly site may have different recommendations for stencil design.

D (R–PDSO–G16) PLASTIC SMALL OUTLINE

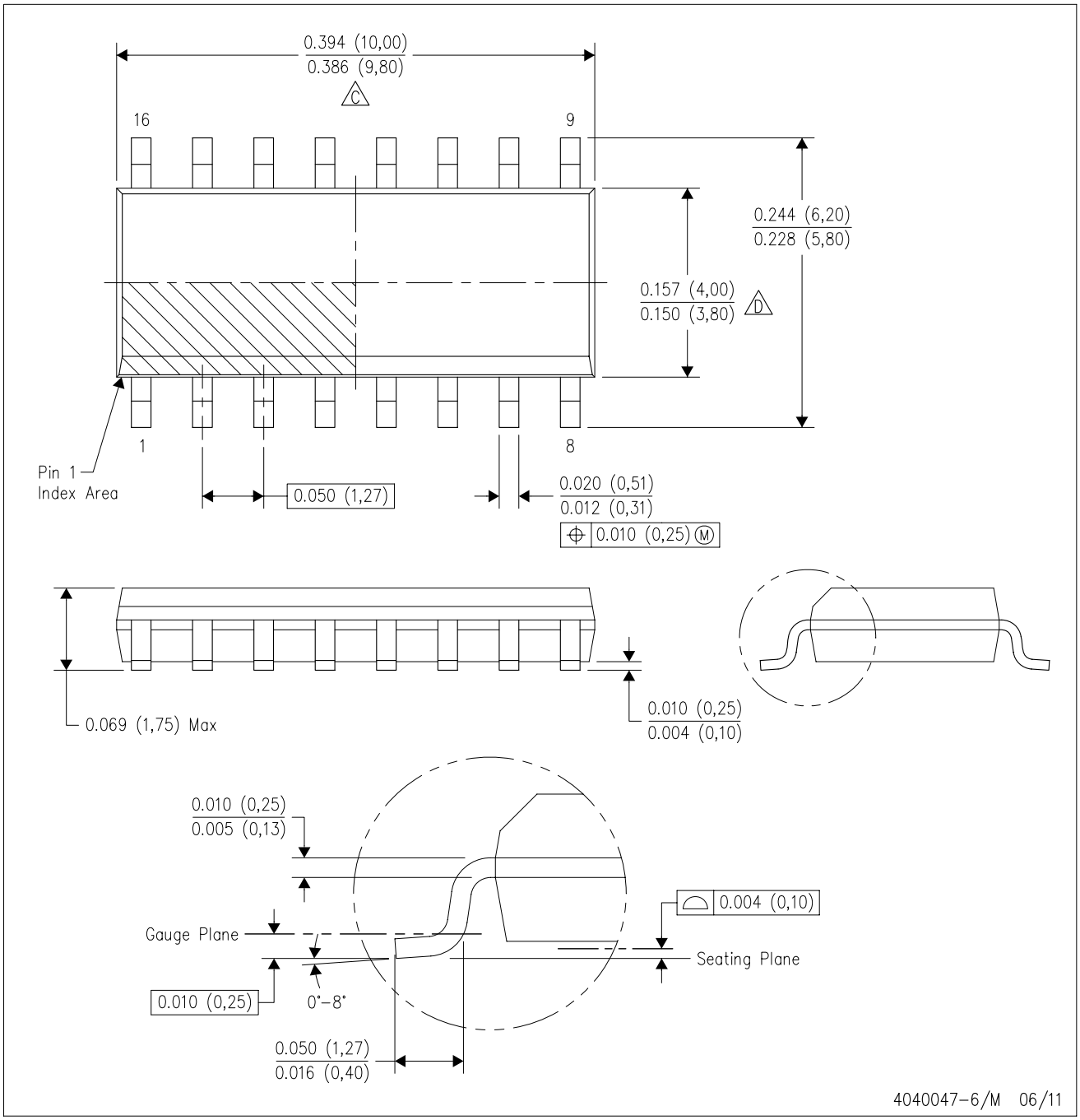

NOTES:
A. All linear dimensions are in inches (millimeters).
B. This drawing is subject to change without notice.
C. Body length does not include mold flash, protrusions, or gate burrs. Mold flash, protrusions, or gate burrs shall not exceed 0.006 (0,15) each side.
D. Body width does not include interlead flash. Interlead flash shall not exceed 0.017 (0,43) each side.
E. Reference JEDEC MS–012 variation AC.

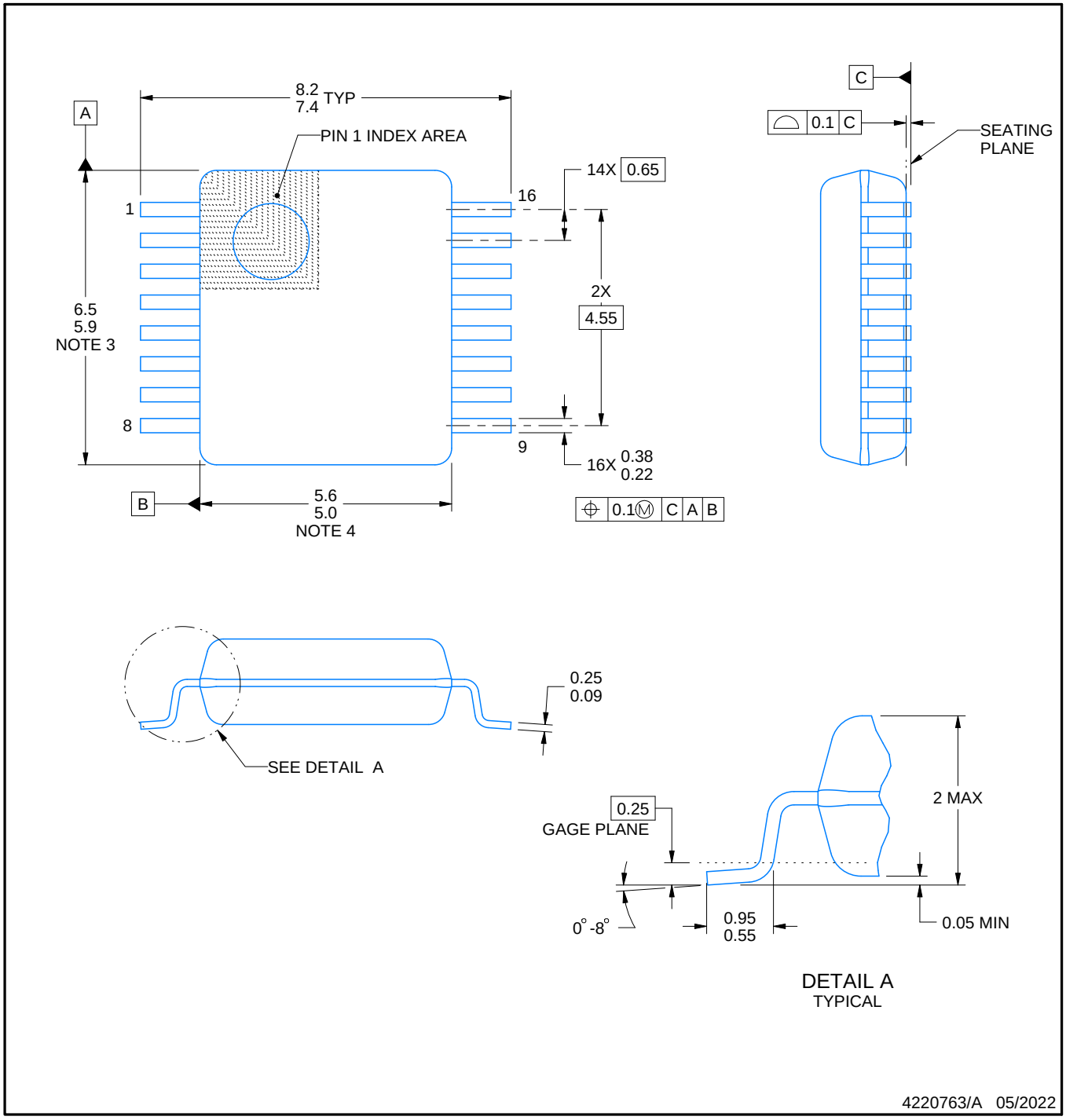

NOTES:

1. All linear dimensions are in millimeters. Any dimensions in parenthesis are for reference only. Dimensioning and tolerancing per ASME Y14.5M.
2. This drawing is subject to change without notice.
3. This dimension does not include mold flash, protrusions, or gate burrs. Mold flash, protrusions, or gate burrs shall not exceed 0.15 mm per side.
4. Reference JEDEC registration MO-150.

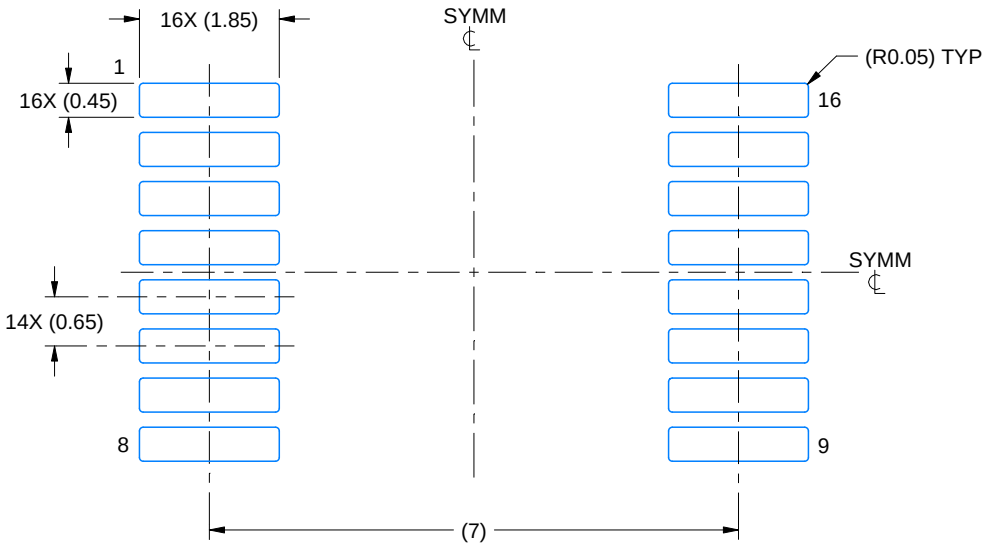

LAND PATTERN EXAMPLE
EXPOSED METAL SHOWN
SCALE: 10X

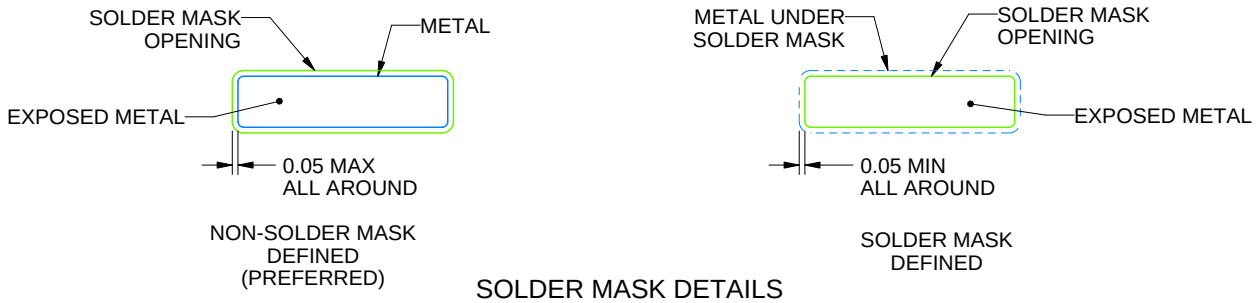

SOLDER MASK DETAILS

4220763/A 05/2022

NOTES: (continued)

5. Publication IPC-7351 may have alternate designs.
6. Solder mask tolerances between and around signal pads can vary based on board fabrication site.

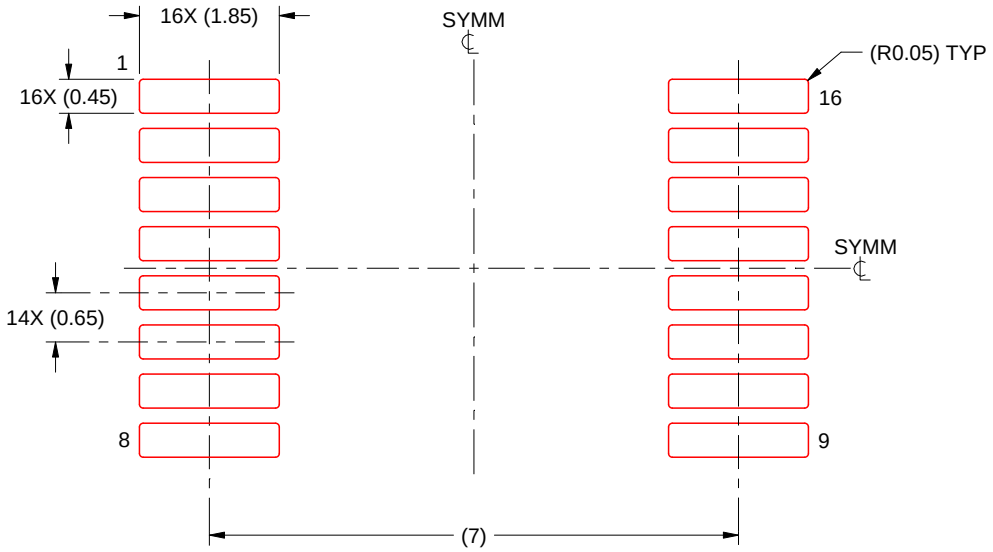

SOLDER PASTE EXAMPLE
BASED ON 0.125 mm THICK STENCIL
SCALE: 10X

4220763/A 05/2022

NOTES: (continued)

7. Laser cutting apertures with trapezoidal walls and rounded corners may offer better paste release. IPC-7525 may have alternate design recommendations.
8. Board assembly site may have different recommendations for stencil design.

W (R–GDFP–F16) CERAMIC DUAL FLATPACK

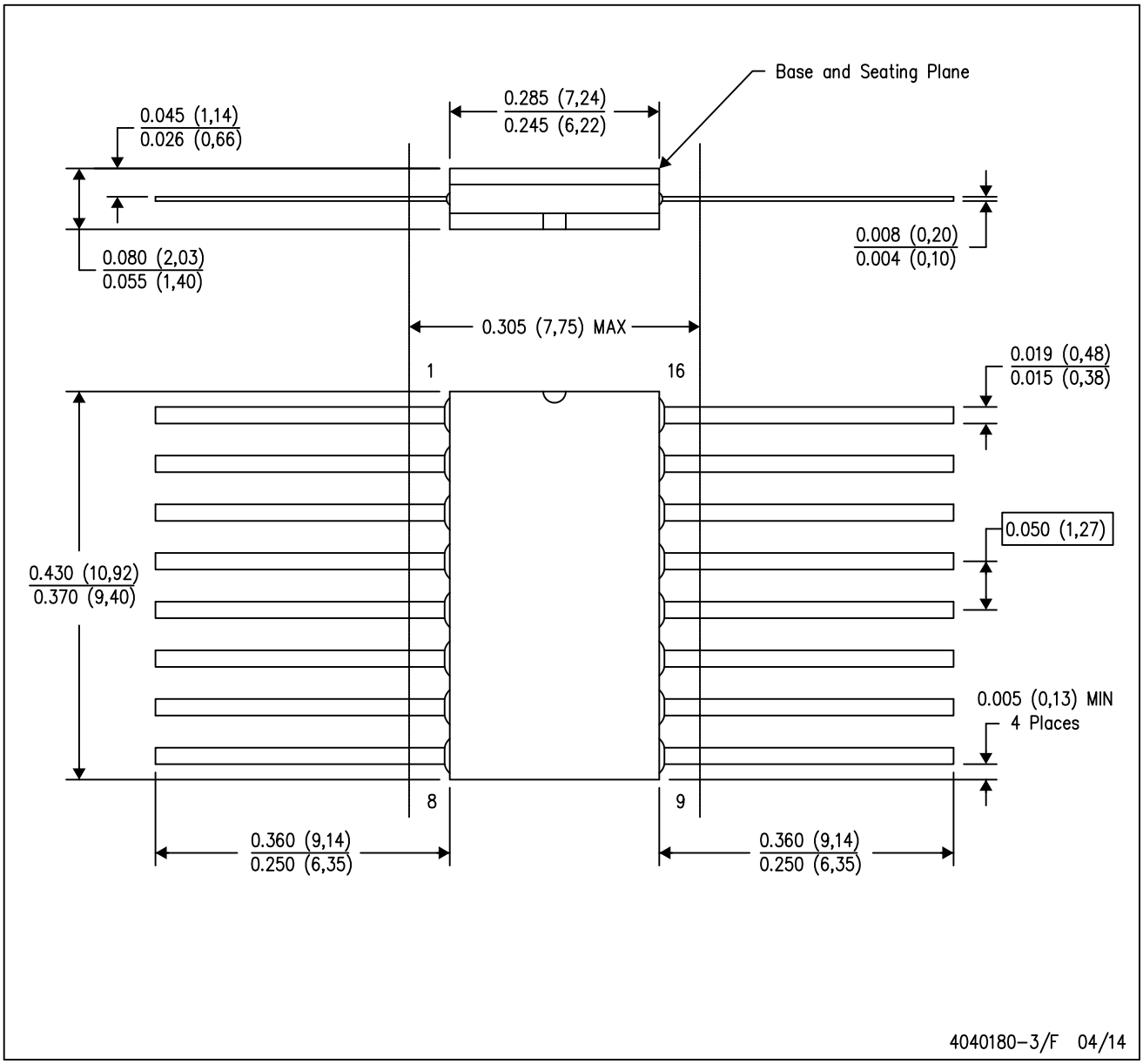

NOTES:
A. All linear dimensions are in inches (millimeters).
B. This drawing is subject to change without notice.
C. This package can be hermetically sealed with a ceramic lid using glass frit.
D. Index point is provided on cap for terminal identification only.
E. Falls within MIL STD 1835 GDFP2–F16

GENERIC PACKAGE VIEW

FK 20

LCCC - 2.03 mm max height

8.89 x 8.89, 1.27 mm pitch

LEADLESS CERAMIC CHIP CARRIER

This image is a representation of the package family, actual package may vary.
Refer to the product data sheet for package details.

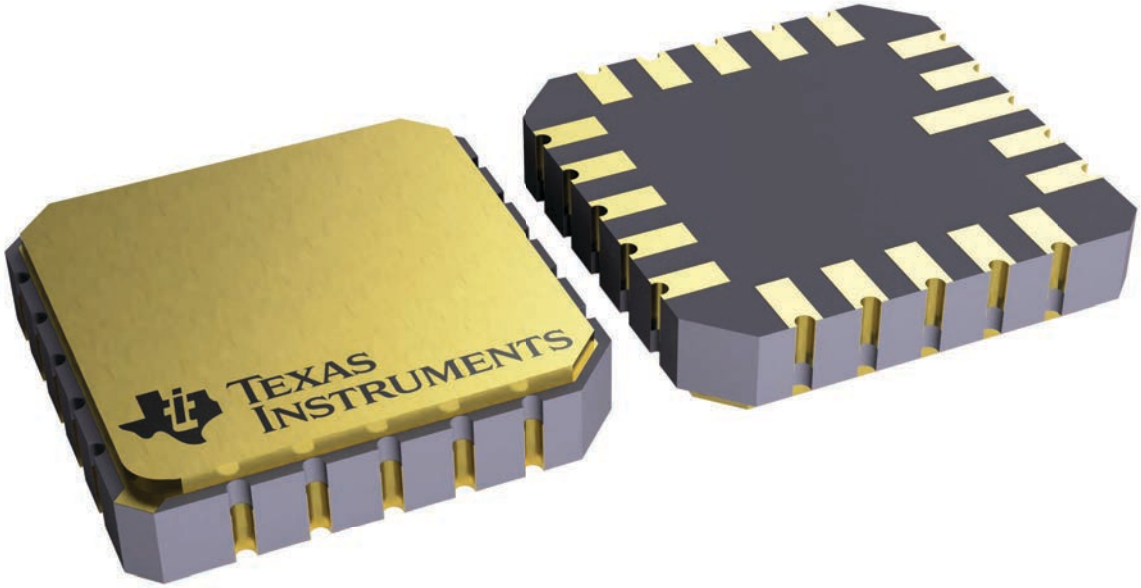

4229370VA\

J (R–GDIP–T**) CERAMIC DUAL IN–LINE PACKAGE

14 LEADS SHOWN

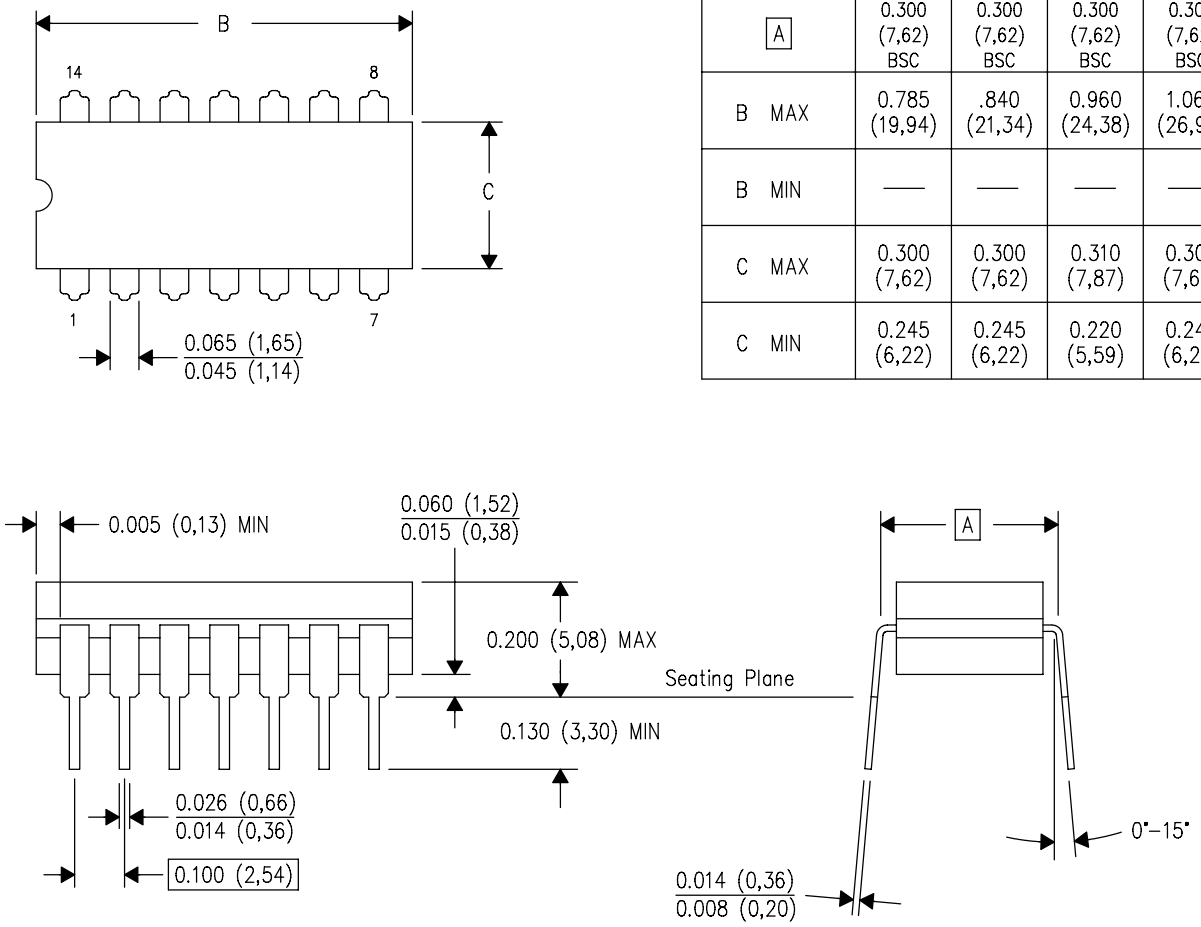

DIM \ PINS **	14	16	18	20
A	0.300 (7,62) BSC	0.300 (7,62) BSC	0.300 (7,62) BSC	0.300 (7,62) BSC
B MAX	0.785 (19,94)	.840 (21,34)	0.960 (24,38)	1.060 (26,92)
B MIN	—	—	—	—
C MAX	0.300 (7,62)	0.300 (7,62)	0.310 (7,87)	0.300 (7,62)
C MIN	0.245 (6,22)	0.245 (6,22)	0.220 (5,59)	0.245 (6,22)

4040083/F 03/03

NOTES:
- A. All linear dimensions are in inches (millimeters).
- B. This drawing is subject to change without notice.
- C. This package is hermetically sealed with a ceramic lid using glass frit.
- D. Index point is provided on cap for terminal identification only on press ceramic glass frit seal only.
- E. Falls within MIL STD 1835 GDIP1–T14, GDIP1–T16, GDIP1–T18 and GDIP1–T20.

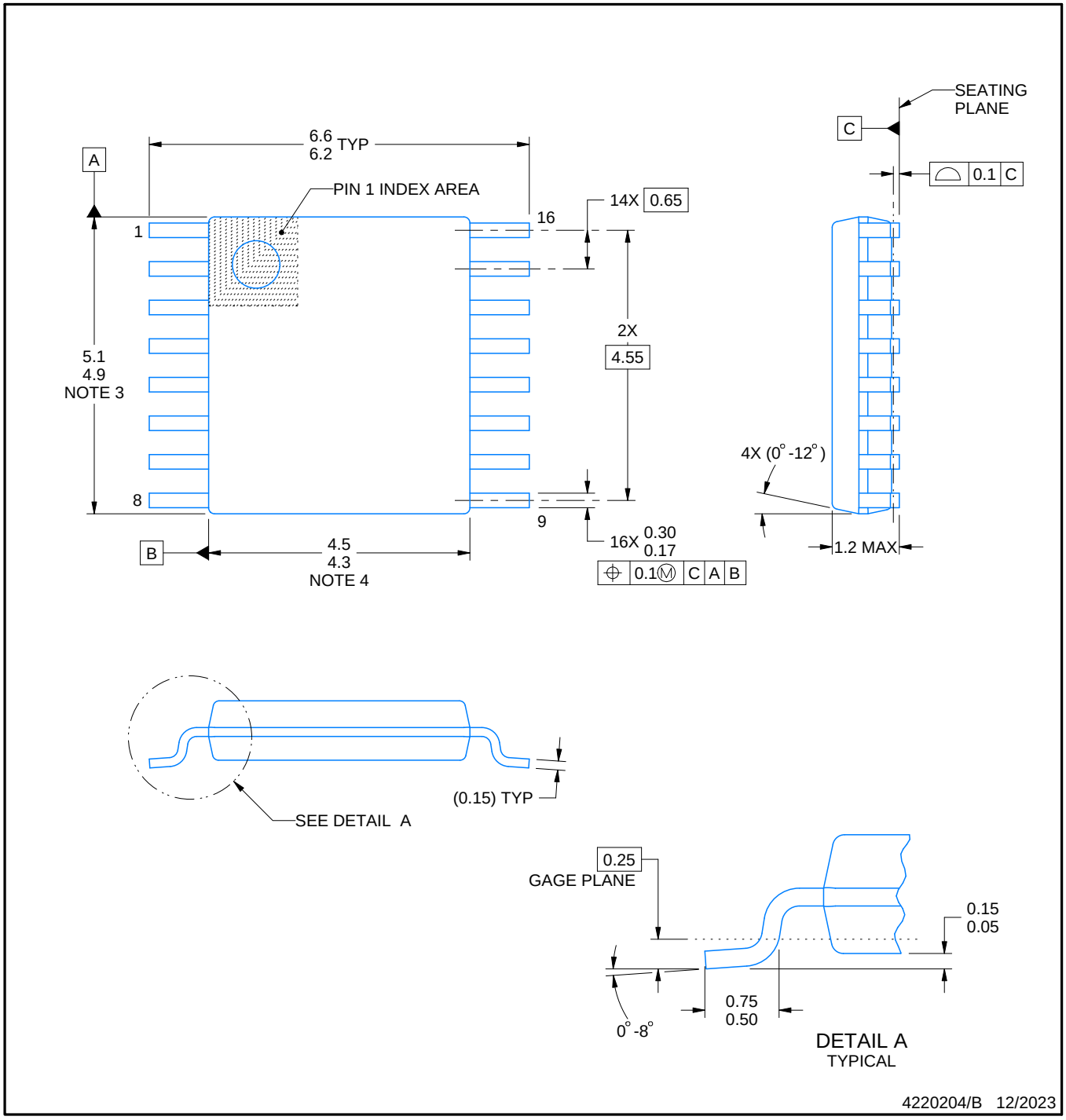

NOTES:

1. All linear dimensions are in millimeters. Any dimensions in parenthesis are for reference only. Dimensioning and tolerancing per ASME Y14.5M.
2. This drawing is subject to change without notice.
3. This dimension does not include mold flash, protrusions, or gate burrs. Mold flash, protrusions, or gate burrs shall not exceed 0.15 mm per side.
4. This dimension does not include interlead flash. Interlead flash shall not exceed 0.25 mm per side.
5. Reference JEDEC registration MO-153.

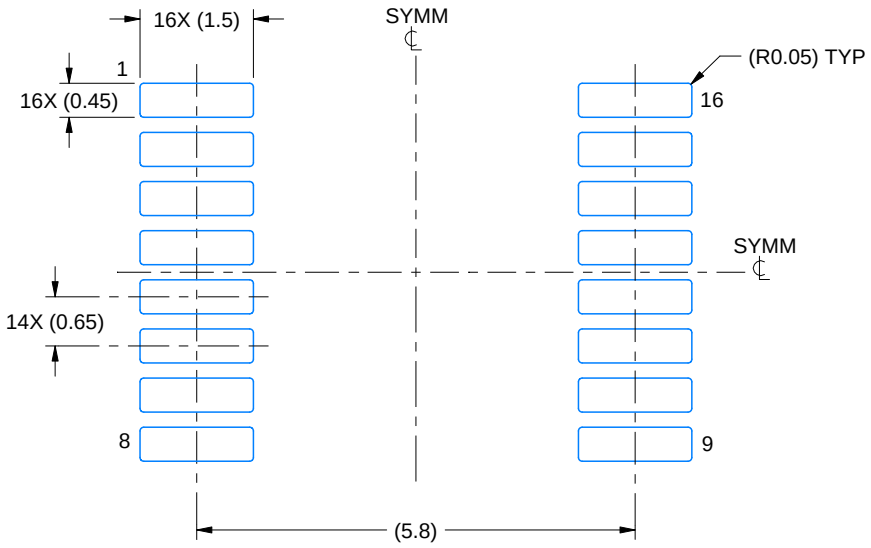

LAND PATTERN EXAMPLE
EXPOSED METAL SHOWN
SCALE: 10X

NON-SOLDER MASK DEFINED (PREFERRED)

SOLDER MASK DEFINED

SOLDER MASK DETAILS

4220204/B 12/2023

NOTES: (continued)

6. Publication IPC-7351 may have alternate designs.
7. Solder mask tolerances between and around signal pads can vary based on board fabrication site.

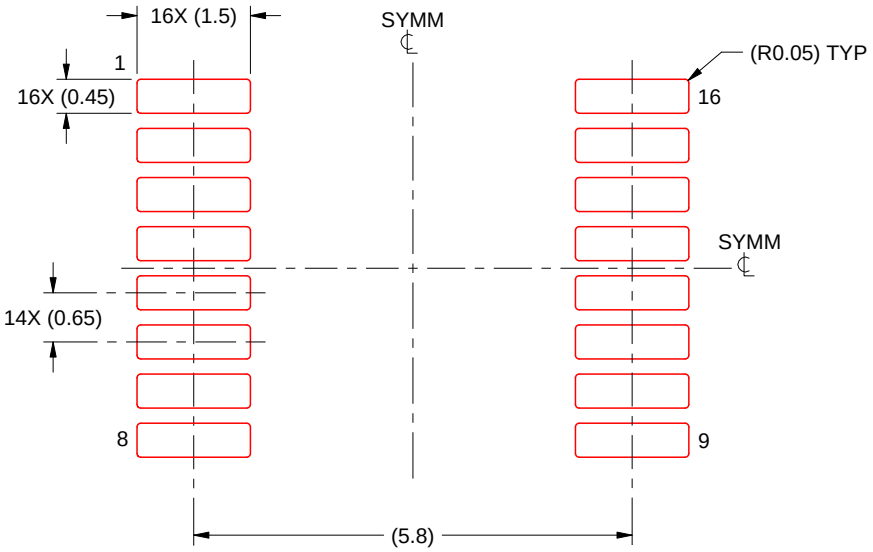

SOLDER PASTE EXAMPLE
BASED ON 0.125 mm THICK STENCIL
SCALE: 10X

4220204/B 12/2023

NOTES: (continued)

8. Laser cutting apertures with trapezoidal walls and rounded corners may offer better paste release. IPC-7525 may have alternate design recommendations.
9. Board assembly site may have different recommendations for stencil design.

N (R–PDIP–T**) PLASTIC DUAL–IN–LINE PACKAGE

16 PINS SHOWN

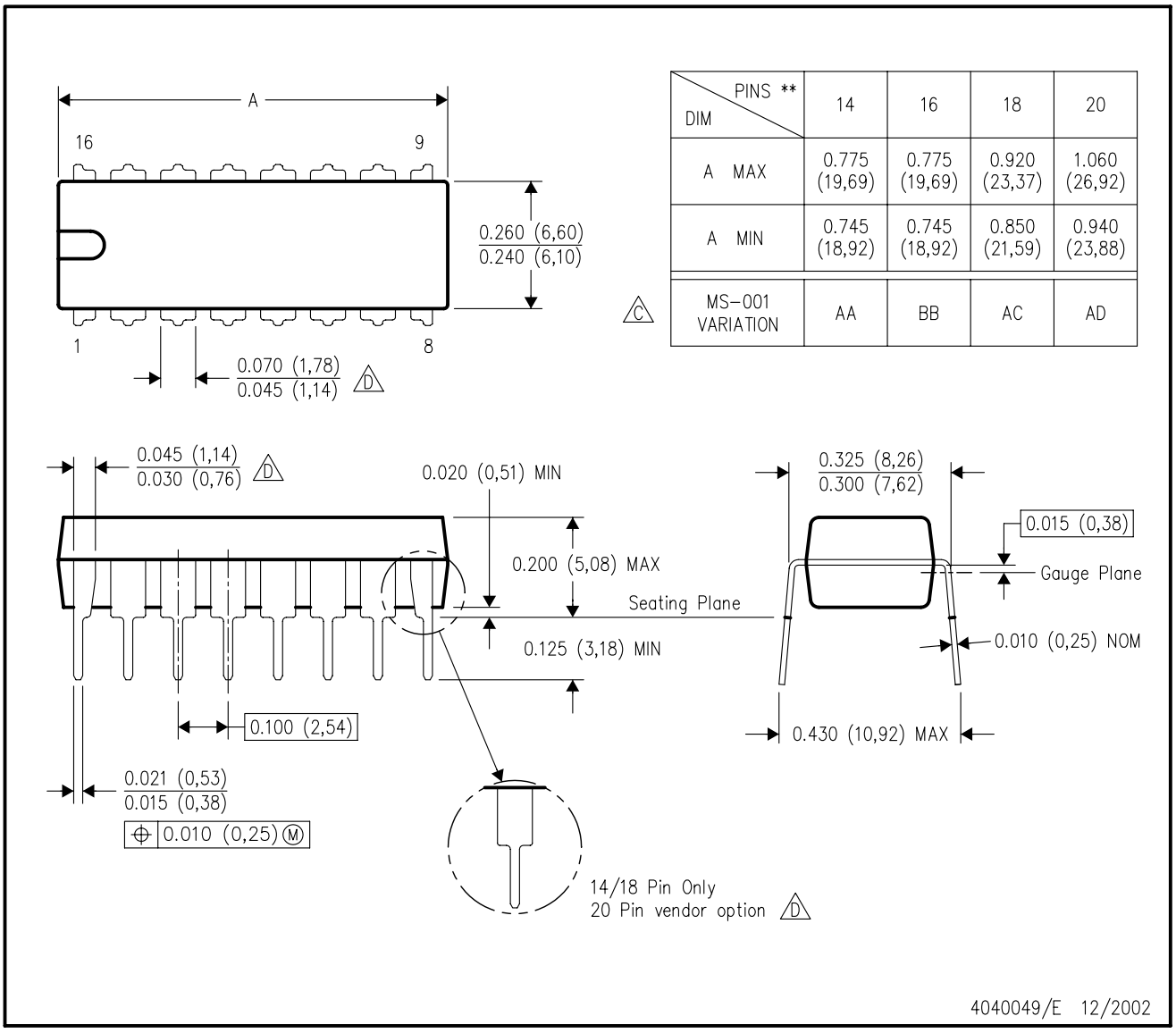

DIM \ PINS **	14	16	18	20
A MAX	0.775 (19,69)	0.775 (19,69)	0.920 (23,37)	1.060 (26,92)
A MIN	0.745 (18,92)	0.745 (18,92)	0.850 (21,59)	0.940 (23,88)
MS–001 VARIATION (C)	AA	BB	AC	AD

NOTES:
A. All linear dimensions are in inches (millimeters).
B. This drawing is subject to change without notice.
C. Falls within JEDEC MS–001, except 18 and 20 pin minimum body length (Dim A).
D. The 20 pin end lead shoulder width is a vendor option, either half or full width.

重要なお知らせと免責事項

TI は、技術データと信頼性データ (データシートを含みます)、設計リソース (リファレンス デザインを含みます)、アプリケーションや設計に関する各種アドバイス、Web ツール、安全性情報、その他のリソースを、欠陥が存在する可能性のある「現状のまま」提供しており、商品性および特定目的に対する適合性の黙示保証、第三者の知的財産権の非侵害保証を含むいかなる保証も、明示的または黙示的にかかわらず拒否します。

これらのリソースは、TI 製品を使用する設計の経験を積んだ開発者への提供を意図したものです。(1) お客様のアプリケーションに適した TI 製品の選定、(2) お客様のアプリケーションの設計、検証、試験、(3) お客様のアプリケーションに該当する各種規格や、その他のあらゆる安全性、セキュリティ、規制、または他の要件への確実な適合に関する責任を、お客様のみが単独で負うものとします。

上記の各種リソースは、予告なく変更される可能性があります。これらのリソースは、リソースで説明されている TI 製品を使用するアプリケーションの開発の目的でのみ、TI はその使用をお客様に許諾します。これらのリソースに関して、他の目的で複製することや掲載することは禁止されています。TI や第三者の知的財産権のライセンスが付与されている訳ではありません。お客様は、これらのリソースを自身で使用した結果発生するあらゆる申し立て、損害、費用、損失、責任について、TI およびその代理人を完全に補償するものとし、TI は一切の責任を拒否します。

TI の製品は、 TI の販売条件 、 TI の総合的な品質ガイドライン 、 ti.com または TI 製品などに関連して提供される他の適用条件に従い提供されます。TI がこれらのリソースを提供することは、適用される TI の保証または他の保証の放棄の拡大や変更を意味するものではありません。 TI がカスタム、またはカスタマー仕様として明示的に指定していない限り、TI の製品は標準的なカタログに掲載される汎用機器です。

お客様がいかなる追加条項または代替条項を提案する場合も、TI はそれらに異議を唱え、拒否します。

Copyright © 2026, Texas Instruments Incorporated

最終更新日：2025 年 10 月