SNx4HC368 3 ステート出力、ヘキサ反転バッファ / ライン・ドライバ

1 特長

- 幅広い動作電圧範囲:2V～6V
- バス・ライン、バッファ・メモリ・アドレス・レジスタ、または最大 15 の LSTTL 負荷を駆動する大電流 3 ステート出力
- 反転出力
- 低消費電力、最大 I_{CC} 80μA
- t_{pd} = 10ns (標準値)
- 5V で ±6mA の出力駆動能力
- 低い入力電流:最大 1μA

2 概要

これらのヘキサ・バッファ / ライン・ドライバは、3 ステート・メモリ・アドレス・ドライバ、クロック・ドライバ、バス用レシーバ / トランスミッタの性能と密度の両方を向上することに特化して設計されています。'HC368 デバイスは、アクティブ LOW 出力イネーブル入力 (1$\overline{OE}$、2$\overline{OE}$) を備えたデュアル 4 ラインおよび 2 ライン・バッファ / ドライバとして構成されています。$\overline{OE}$ が LOW の場合、デバイスは A 入力の反転データを Y 出力に渡します。$\overline{OE}$ が HIGH の場合、出力は高インピーダンス状態になります。

製品情報

部品番号	パッケージ(1)	本体サイズ (公称)
SN54HC368J	CDIP (16)	24.38mm × 6.92mm
SN74HC368D	SOIC (16)	9.90mm × 3.90mm
SN74HC368N	PDIP (16)	19.31mm × 6.35mm
SN74HC368NS	SO (16)	6.20mm × 5.30mm
SN74HC368PW	TSSOP (16)	5.00mm × 4.40mm
SN74HC368FK	LCCC (20)	8.89mm × 8.45mm

(1) 利用可能なパッケージについては、このデータシートの末尾にある注文情報を参照してください。

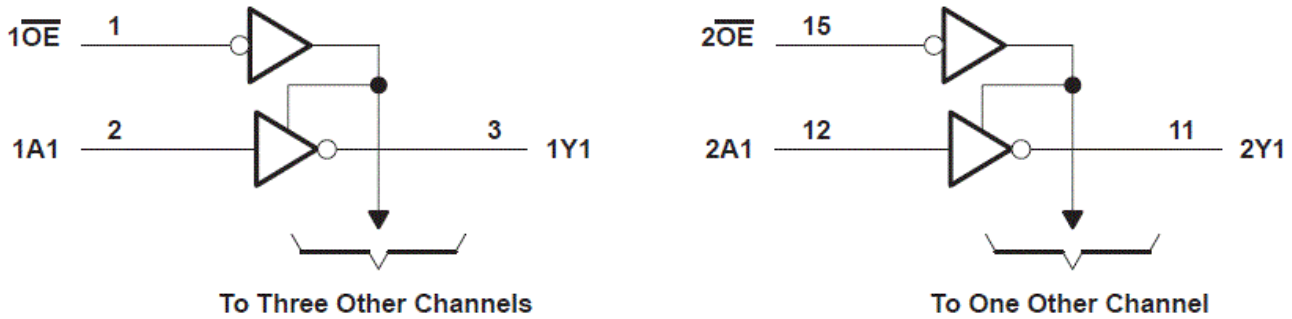

機能ブロック図

英語版の TI 製品についての情報を翻訳したこの資料は、製品の概要を確認する目的で便宜的に提供しているものです。該当する正式な英語版の最新情報は、www.ti.com で閲覧でき、その内容が常に優先されます。TI では翻訳の正確性および妥当性につきましては一切保証いたしません。実際の設計などの前には、必ず最新版の英語版をご参照くださいますようお願いいたします。

Table of Contents

1 特長 ... 1
2 概要 ... 1
3 Revision History ... 2
4 Pin Configuration and Functions ... 3
5 Specifications ... 4
5.1 Absolute Maximum Ratings ... 4
5.2 Recommended Operating Conditions[1] ... 4
5.3 Thermal Information ... 4
5.4 Electrical Characteristics ... 6
5.5 Switching Characteristics ... 6
5.6 Operating Characteristics ... 7
6 Parameter Measurement Information ... 8
7 Detailed Description ... 9
7.1 Overview ... 9
7.2 Functional Block Diagram ... 9
7.3 Device Functional Modes ... 9
8 Power Supply Recommendations ... 10
9 Layout ... 10
9.1 Layout Guidelines ... 10
10 Device and Documentation Support ... 11
10.1 Documentation Support ... 11
10.2 Receiving Notification of Documentation Updates ... 11
10.3 サポート・リソース ... 11
10.4 Trademarks ... 11
10.5 Electrostatic Discharge Caution ... 11
10.6 Glossary ... 11
11 Mechanical, Packaging, and Orderable Information ... 11

3 Revision History

資料番号末尾の英字は改訂を表しています。その改訂履歴は英語版に準じています。

Changes from Revision E (February 2022) to Revision F (June 2022)	Page
• Junction-to-ambient thermal resistance values increased. D was 73 is now 117.2, N was 67 is now 68.6, NS was 64 is now 87.4, PW was 108 is now 137.5	4

Changes from Revision D (October 2003) to Revision E (February 2022)	Page
• 最新のデータシート規格を反映するように、文書全体にわたって表、図、相互参照の採番方法を更新	1

Copyright © 2022 Texas Instruments Incorporated

4 Pin Configuration and Functions

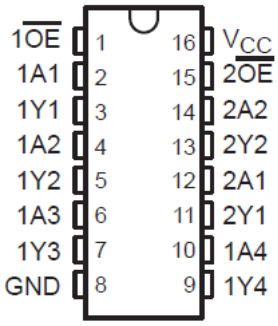

J, D, N, NS, PW package
16-Pin CDIP, SOIC, PDIP, SO, TSSOP
Top View

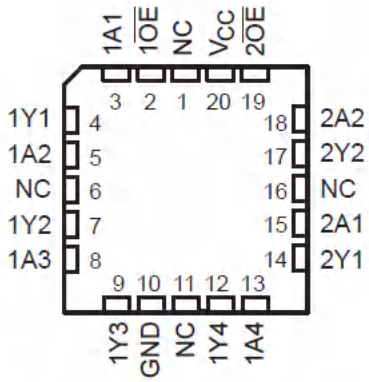

NC – No internal connection

FK package
20-Pin LCCC
Top View

5 Specifications

5.1 Absolute Maximum Ratings

over operating free-air temperature range (unless otherwise noted)[1]

			MIN	MAX	UNIT
V_{CC}	Supply voltage range		-0.5	7	V
I_{IK}	Input clamp current[2]	(V_I < 0 or V_I > V_{CC})		±20	mA
I_{OK}	Output clamp current[2]	(V_O < 0 or V_O > V_{CC})		±20	mA
I_O	Continuous output current	(V_O = 0 to V_{CC})		±25	mA
	Continuous current through V_{CC} or GND			±50	mA
T_J	Junction temperature			150	°C
T_{stg}	Storage temperature		-65	150	°C

(1) Stresses beyond those listed under *absolute maximum ratings* may cause permanent damage to the device. These are stress ratings only and functional operation of the device at these or any other conditions beyond those indicated under *recommended operating conditions* is not implied. Exposure to absolute-maximum-rated conditions for extended periods may affect device reliability.
(2) The input and output voltage ratings may be exceeded if the input and output current ratings are observed.

5.2 Recommended Operating Conditions[1]

			SN54HC368			SN74HC368			UNIT
			MIN	NOM	MAX	MIN	NOM	MAX	
V_{CC}	Supply voltage		2	5	6	2	5	6	V
V_{IH}	High-level input voltage	V_{CC} = 2 V	1.5			1.5			V
		V_{CC} = 4.5 V	3.15			3.15			
		V_{CC} = 6 V	4.2			4.2			
V_{IL}	Low-level input voltage	V_{CC} = 2 V			0.5			0.5	V
		V_{CC} = 4.5 V			1.35			1.35	
		V_{CC} = 6 V			1.8			1.8	
V_I	Input voltage		0		V_{CC}	0		V_{CC}	V
V_O	Output voltage		0		V_{CC}	0		V_{CC}	V
t_t	Input transition rise/fall time	V_{CC} = 2 V			1000			1000	ns
		V_{CC} = 4.5 V			500			500	
		V_{CC} = 6 V			400			400	
T_A	Operating free-air temperature		– 55		125	– 40		85	°C

(1) All unused inputs of the device must be held at V_{CC} or GND to ensure proper device operation. Refer to the TI application report Implications of Slow or Floating SMOS Inputs, literature number SCBA004.

5.3 Thermal Information

THERMAL METRIC		D (SOIC) 16 PINS	N (PDIP) 16 PINS	NS (SO) 16 PINS	PW (TSSOP) 16 PINS	UNIT
$R_{\theta JA}$	Junction-to-ambient thermal resistance[1]	117.2	68.6	87.4	137.5	°C/W
$R_{\theta JC(top)}$	Junction-to-case (top) thermal resistance	77.2	61.1	44.9	75.3	°C/W
$R_{\theta JB}$	Junction-to-board thermal resistance	75.6	48.6	49.6	82.2	°C/W
ψ_{JT}	Junction-to-top characterization parameter	38.1	33.9	12.2	25.1	°C/W
ψ_{JB}	Junction-to-board characterization parameter	75.3	48.4	49.2	81.8	°C/W

Copyright © 2022 Texas Instruments Incorporated

5.3 Thermal Information (continued)

THERMAL METRIC		D (SOIC) 16 PINS	N (PDIP) 16 PINS	NS (SO) 16 PINS	PW (TSSOP) 16 PINS	UNIT
$R_{\theta JC(bot)}$	Junction-to-case (bottom) thermal resistance	N/A	N/A	N/A	N/A	°C/W

(1) For more information about traditional and new thermal metrics, see the *Semiconductor and IC package thermal metrics* application report.

5.4 Electrical Characteristics

Over recommended operating free-air temperature range (unless otherwise noted)

PARAMETER	TEST CONDITIONS		V_{CC} (V)	T_A = 25°C			SN74HC368		SN74HC368		UNIT
				MIN	TYP	MAX	MIN	MAX	MIN	MAX	
V_{OH}	$V_I = V_{IH}$ or V_{IL}	I_{OH} = – 20 µA	2	1.9	1.998		1.9		1.9		V
			4.5	4.4	4.499		4.4		4.4		
			6	5.9	5.999		5.9		5.9		
		I_{OH} - 6 mA	4.5	3.98	4.3		3.7		3.84		
		I_{OH} = – 7.8 mA	6	5.48	5.8		5.2		5.34		
V_{OL}	$V_I = V_{IH}$ or V_{IL}	I_{OL} = 20 µA	2		0.002	0.1		0.1		0.1	V
			4.5		0.001	0.1		0.1		0.1	
			6		0.001	0.1		0.1		0.1	
		I_{OL} = 6 mA	4.5		0.17	0.26		0.4		0.33	
		I_{OL} = 7.8 mA	6		0.17	0.26		0.4		0.33	
I_I	$V_I = V_{CC}$ or 0		6		±0.1	±100		±1000		±1000	nA
I_{OZ}	$V_O = V_{CC}$ or 0		6		±0.01	±0.5		±10		±5	µA
I_{CC}	$V_I = V_{CC}$ or 0, I_O = 0		6			8		160		80	µA
C_i			2 to 6		3	10		10		10	pF

5.5 Switching Characteristics

Over recommended operating free-air temperature range, C_L = 50 pF. See Parameter Measurement Information

PARAMETER	FROM (INPUT)	TO (OUTPUT)	V_{CC} (V)	T_A = 25°C			SN54HC368		SN74HC368		
				MIN	TYP	MAX	MIN	MAX	MIN	MAX	
t_{pd}	A	Y	2		50	95		145		120	ns
			4.5		12	19		29		24	
			6		10	16		25		20	
t_{en}	$\overline{OE}$	Y	2		100	190		285		238	ns
			4.5		26	38		57		48	
			6		21	32		48		41	
t_{dis}	$\overline{OE}$	Y	2		50	175		265		240	ns
			4.5		21	35		53		48	
			6		19	30		45		41	
t_t		Any	2		28	60		90		75	ns
			4.5		8	12		18		15	
			6		6	10		15		13	

Copyright © 2022 Texas Instruments Incorporated

5.5 Switching Characteristics

Over recommended operating free-air temperature range, C_L = 150 pF. See Parameter Measurement Information

PARAMETER	FROM (INPUT)	TO (OUTPUT)	V_{CC} (V)	T_A = 25°C			SN54HC368		SN74HC368		
				MIN	TYP	MAX	MIN	MAX	MIN	MAX	
t_{pd}	A	Y	2		70	120		180		150	ns
			4.5		17	24		36		30	
			6		14	20		31		25	
t_{en}	$\overline{OE}$	Y	2		140	1230		345		285	ns
			4.5		30	46		69		57	
			6		28	39		59		48	
t_t		Any	2		45	210		315		265	ns
			4.5		17	42		63		53	
			6		13	36		53		45	

5.6 Operating Characteristics

T_A = 25°C

		Test Conditions	TYP	UNIT
C_{pd}	Power dissipation capacitance per buffer/driver	No load	35	pF

6 Parameter Measurement Information

t_{pd} is the maximum between t_{PLH} and t_{PHL}

t_t is the maximum between t_{TLH} and t_{THL}

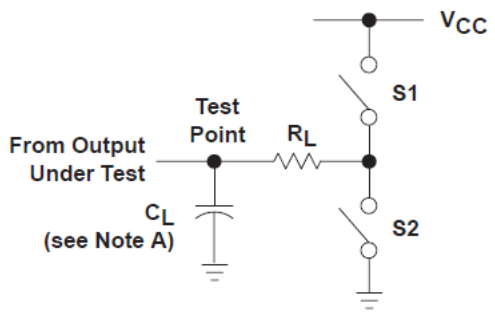

図 6-1.

PARAMETER		R_L	C_L	S1	S2
t_{en}	t_{PZH}	1 kΩ	50 pF or 150 pF	Open	Closed
	t_{PZL}			Closed	Open
t_{dis}	t_{PHZ}	1 kΩ	50 pF	Open	Closed
	t_{PLZ}			Closed	Open
t_{pd} or t_t		--	50 pF or 150 pF	Open	Open

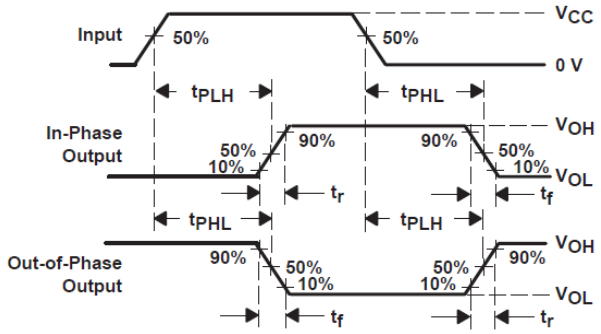

図 6-2. Voltage Waveforms
Propagation Delay and Output Transitions Times

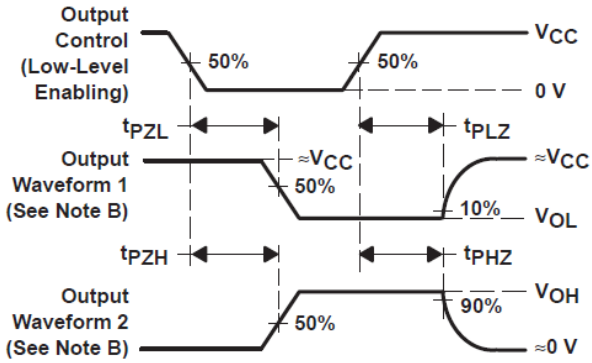

図 6-3. Voltage Waveforms
Enable and Disable Times for 3-State Outputs

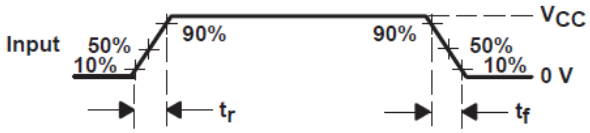

図 6-4. Voltage Waveform
Input Rise and Fall Times

A. C_L includes probe and jig capacitance.

B. Waveform 1 is for an output with internal conditions such that the output is low except when diabled by the output control.
Waveform 2 is for an output with internal conditions such that the output is high except when diabled by the output control.

C. Phase relationships between waveforms were chosen arbitrarily. All input pulses are supplied by generators having the following charactersitics: PRR ≤ 1 MHz, Z_O = 50 Ω, t_r = 6 ns, t_f = 6 ns.

D. The outputs are measured one at a time with one input transition per measurement.

E. t_{PLZ} and t_{PHZ} are the same as t_{dis}.

F. t_{PZL} and t_{PZH} are the same as t_{en}.

Copyright © 2022 Texas Instruments Incorporated

7 Detailed Description

7.1 Overview

These hex inverting buffers and line drivers are designed specifically to improve both the performance and density of 3-state memory address drivers, clock drivers, and bus-oriented receivers and transmitters. The ’ HC368 devices are organized as dual 4-line and 2-line buffers/drivers with active-low output-enable (1$\overline{OE}$ and 2$\overline{OE}$) inputs. When $\overline{OE}$ is low, the device passes inverted data from the A inputs to the Y outputs. When $\overline{OE}$ is high, the outputs are in the high-impedance state.

7.2 Functional Block Diagram

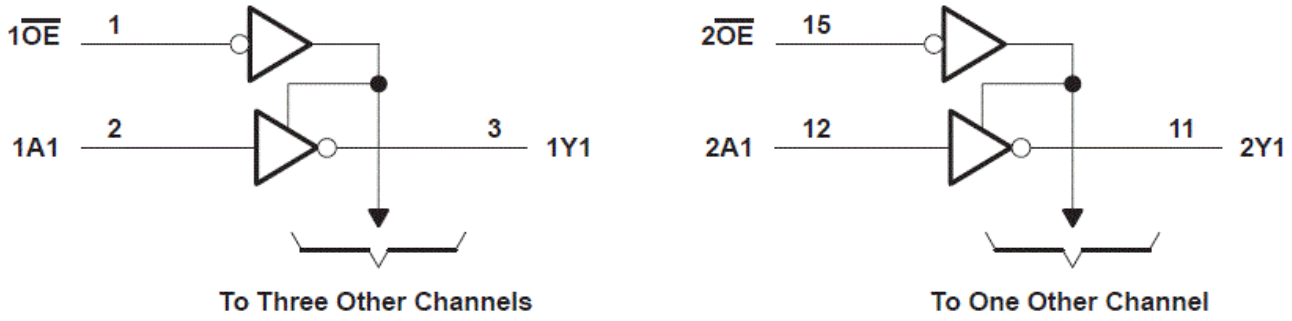

図 7-1. Functional Block Diagram

7.3 Device Functional Modes

Function Table
(Each buffer/driver)

INPUTS		OUTPUT Y
$\overline{OE}$	A	
H	X	Z
L	H	L
L	L	H

8 Power Supply Recommendations

The power supply can be any voltage between the minimum and maximum supply voltage rating located in the *Recommended Operating Conditions*. Each V_{CC} terminal should have a good bypass capacitor to prevent power disturbance. A 0.1-μF capacitor is recommended for this device. It is acceptable to parallel multiple bypass caps to reject different frequencies of noise. The 0.1-μF and 1-μF capacitors are commonly used in parallel. The bypass capacitor should be installed as close to the power terminal as possible for best results.

9 Layout

9.1 Layout Guidelines

When using multiple-input and multiple-channel logic devices inputs must not ever be left floating. In many cases, functions or parts of functions of digital logic devices are unused; for example, when only two inputs of a triple-input AND gate are used or only 3 of the 4 buffer gates are used. Such unused input pins must not be left unconnected because the undefined voltages at the outside connections result in undefined operational states. All unused inputs of digital logic devices must be connected to a logic high or logic low voltage, as defined by the input voltage specifications, to prevent them from floating. The logic level that must be applied to any particular unused input depends on the function of the device. Generally, the inputs are tied to GND or V_{CC}, whichever makes more sense for the logic function or is more convenient.

Copyright © 2022 Texas Instruments Incorporated

10 Device and Documentation Support

TI offers an extensive line of development tools. Tools and software to evaluate the performance of the device, generate code, and develop solutions are listed below.

10.1 Documentation Support

10.1.1 Related Documentation

10.2 Receiving Notification of Documentation Updates

To receive notification of documentation updates, navigate to the device product folder on ti.com. Click on *Subscribe to updates* to register and receive a weekly digest of any product information that has changed. For change details, review the revision history included in any revised document.

10.3 サポート・リソース

TI E2E™ サポート・フォーラムは、エンジニアが検証済みの回答と設計に関するヒントをエキスパートから迅速かつ直接得ることができる場所です。既存の回答を検索したり、独自の質問をしたりすることで、設計で必要な支援を迅速に得ることができます。

リンクされているコンテンツは、該当する貢献者により、現状のまま提供されるものです。これらは TI の仕様を構成するものではなく、必ずしも TI の見解を反映したものではありません。TI の使用条件を参照してください。

10.4 Trademarks

TI E2E™ is a trademark of Texas Instruments.
すべての商標は、それぞれの所有者に帰属します。

10.5 Electrostatic Discharge Caution

This integrated circuit can be damaged by ESD. Texas Instruments recommends that all integrated circuits be handled with appropriate precautions. Failure to observe proper handling and installation procedures can cause damage.

ESD damage can range from subtle performance degradation to complete device failure. Precision integrated circuits may be more susceptible to damage because very small parametric changes could cause the device not to meet its published specifications.

10.6 Glossary

TI Glossary This glossary lists and explains terms, acronyms, and definitions.

11 Mechanical, Packaging, and Orderable Information

The following pages include mechanical, packaging, and orderable information. This information is the most current data available for the designated devices. This data is subject to change without notice and revision of this document. For browser-based versions of this data sheet, refer to the left-hand navigation.

PACKAGING INFORMATION

Orderable part number	Status (1)	Material type (2)	Package | Pins	Package qty | Carrier	RoHS (3)	Lead finish/ Ball material (4)	MSL rating/ Peak reflow (5)	Op temp (°C)	Part marking (6)
5962-86812012A	Active	Production	LCCC (FK) | 20	55 | TUBE	No	SNPB	N/A for Pkg Type	-55 to 125	5962-86812012A SNJ54HC368FK
5962-8681201EA	Active	Production	CDIP (J) | 16	25 | TUBE	No	SNPB	N/A for Pkg Type	-55 to 125	5962-8681201EA SNJ54HC368J
JM38510/65709BEA	Active	Production	CDIP (J) | 16	25 | TUBE	No	SNPB	N/A for Pkg Type	-55 to 125	JM38510/65709BEA
JM38510/65709BEA.A	Active	Production	CDIP (J) | 16	25 | TUBE	No	SNPB	N/A for Pkg Type	-55 to 125	JM38510/65709BEA
M38510/65709BEA	Active	Production	CDIP (J) | 16	25 | TUBE	No	SNPB	N/A for Pkg Type	-55 to 125	JM38510/65709BEA
SN54HC368J	Active	Production	CDIP (J) | 16	25 | TUBE	No	SNPB	N/A for Pkg Type	-55 to 125	SN54HC368J
SN54HC368J.A	Active	Production	CDIP (J) | 16	25 | TUBE	No	SNPB	N/A for Pkg Type	-55 to 125	SN54HC368J
SN74HC368D	Obsolete	Production	SOIC (D) | 16	-	-	Call TI	Call TI	-40 to 85	HC368
SN74HC368DR	Active	Production	SOIC (D) | 16	2500 | LARGE T&R	Yes	NIPDAU | SN	Level-1-260C-UNLIM	-40 to 85	HC368
SN74HC368DR.A	Active	Production	SOIC (D) | 16	2500 | LARGE T&R	Yes	NIPDAU	Level-1-260C-UNLIM	-40 to 85	HC368
SN74HC368DRG4	Active	Production	SOIC (D) | 16	2500 | LARGE T&R	Yes	NIPDAU	Level-1-260C-UNLIM	-40 to 85	HC368
SN74HC368DRG4.A	Active	Production	SOIC (D) | 16	2500 | LARGE T&R	Yes	NIPDAU	Level-1-260C-UNLIM	-40 to 85	HC368
SN74HC368N	Active	Production	PDIP (N) | 16	25 | TUBE	Yes	NIPDAU	N/A for Pkg Type	-40 to 85	SN74HC368N
SN74HC368N.A	Active	Production	PDIP (N) | 16	25 | TUBE	Yes	NIPDAU	N/A for Pkg Type	-40 to 85	SN74HC368N
SN74HC368NE4	Active	Production	PDIP (N) | 16	25 | TUBE	Yes	NIPDAU	N/A for Pkg Type	-40 to 85	SN74HC368N
SN74HC368NSR	Active	Production	SOP (NS) | 16	2000 | LARGE T&R	Yes	NIPDAU	Level-1-260C-UNLIM	-40 to 85	HC368
SN74HC368NSR.A	Active	Production	SOP (NS) | 16	2000 | LARGE T&R	Yes	NIPDAU	Level-1-260C-UNLIM	-40 to 85	HC368
SN74HC368PW	Obsolete	Production	TSSOP (PW) | 16	-	-	Call TI	Call TI	-40 to 85	HC368
SN74HC368PWR	Active	Production	TSSOP (PW) | 16	2000 | LARGE T&R	Yes	NIPDAU | SN	Level-1-260C-UNLIM	-40 to 85	HC368
SN74HC368PWR.A	Active	Production	TSSOP (PW) | 16	2000 | LARGE T&R	Yes	NIPDAU	Level-1-260C-UNLIM	-40 to 85	HC368
SNJ54HC368FK	Active	Production	LCCC (FK) | 20	55 | TUBE	No	SNPB	N/A for Pkg Type	-55 to 125	5962-86812012A SNJ54HC368FK

Orderable part number	Status (1)	Material type (2)	Package | Pins	Package qty | Carrier	RoHS (3)	Lead finish/ Ball material (4)	MSL rating/ Peak reflow (5)	Op temp (°C)	Part marking (6)
SNJ54HC368FK.A	Active	Production	LCCC (FK) | 20	55 | TUBE	No	SNPB	N/A for Pkg Type	-55 to 125	5962-86812012A SNJ54HC 368FK
SNJ54HC368J	Active	Production	CDIP (J) | 16	25 | TUBE	No	SNPB	N/A for Pkg Type	-55 to 125	5962-8681201EA SNJ54HC368J
SNJ54HC368J.A	Active	Production	CDIP (J) | 16	25 | TUBE	No	SNPB	N/A for Pkg Type	-55 to 125	5962-8681201EA SNJ54HC368J

(1) **Status:** For more details on status, see our product life cycle.

(2) **Material type:** When designated, preproduction parts are prototypes/experimental devices, and are not yet approved or released for full production. Testing and final process, including without limitation quality assurance, reliability performance testing, and/or process qualification, may not yet be complete, and this item is subject to further changes or possible discontinuation. If available for ordering, purchases will be subject to an additional waiver at checkout, and are intended for early internal evaluation purposes only. These items are sold without warranties of any kind.

(3) **RoHS values:** Yes, No, RoHS Exempt. See the TI RoHS Statement for additional information and value definition.

(4) **Lead finish/Ball material:** Parts may have multiple material finish options. Finish options are separated by a vertical ruled line. Lead finish/Ball material values may wrap to two lines if the finish value exceeds the maximum column width.

(5) **MSL rating/Peak reflow:** The moisture sensitivity level ratings and peak solder (reflow) temperatures. In the event that a part has multiple moisture sensitivity ratings, only the lowest level per JEDEC standards is shown. Refer to the shipping label for the actual reflow temperature that will be used to mount the part to the printed circuit board.

(6) **Part marking:** There may be an additional marking, which relates to the logo, the lot trace code information, or the environmental category of the part.

Multiple part markings will be inside parentheses. Only one part marking contained in parentheses and separated by a "~" will appear on a part. If a line is indented then it is a continuation of the previous line and the two combined represent the entire part marking for that device.

Important Information and Disclaimer: The information provided on this page represents TI's knowledge and belief as of the date that it is provided. TI bases its knowledge and belief on information provided by third parties, and makes no representation or warranty as to the accuracy of such information. Efforts are underway to better integrate information from third parties. TI has taken and continues to take reasonable steps to provide representative and accurate information but may not have conducted destructive testing or chemical analysis on incoming materials and chemicals. TI and TI suppliers consider certain information to be proprietary, and thus CAS numbers and other limited information may not be available for release.

In no event shall TI's liability arising out of such information exceed the total purchase price of the TI part(s) at issue in this document sold by TI to Customer on an annual basis.

OTHER QUALIFIED VERSIONS OF SN54HC368, SN74HC368 :

- Catalog : SN74HC368
- Military : SN54HC368

NOTE: Qualified Version Definitions:

- Catalog - TI's standard catalog product
- Military - QML certified for Military and Defense Applications

TAPE AND REEL INFORMATION

REEL DIMENSIONS

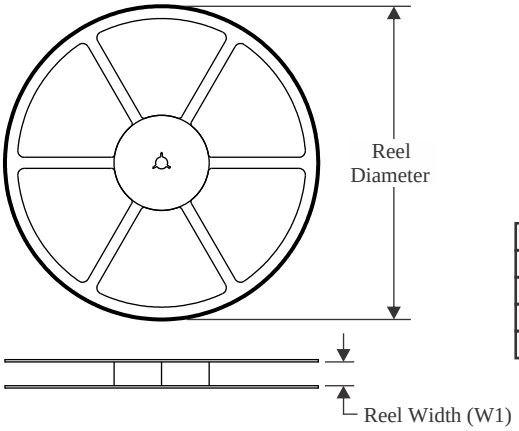

TAPE DIMENSIONS

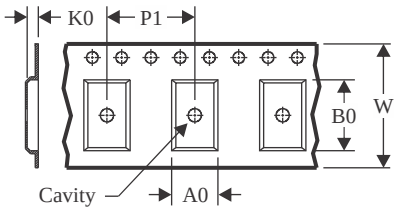

A0	Dimension designed to accommodate the component width
B0	Dimension designed to accommodate the component length
K0	Dimension designed to accommodate the component thickness
W	Overall width of the carrier tape
P1	Pitch between successive cavity centers

QUADRANT ASSIGNMENTS FOR PIN 1 ORIENTATION IN TAPE

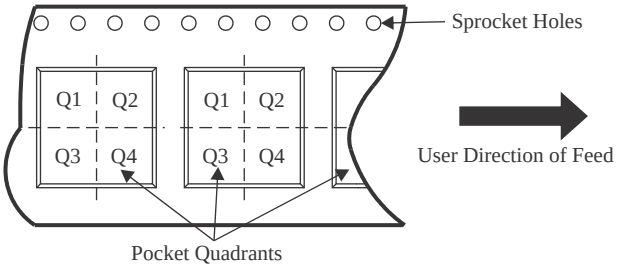

*All dimensions are nominal

Device	Package Type	Package Drawing	Pins	SPQ	Reel Diameter (mm)	Reel Width W1 (mm)	A0 (mm)	B0 (mm)	K0 (mm)	P1 (mm)	W (mm)	Pin1 Quadrant
SN74HC368DR	SOIC	D	16	2500	330.0	16.4	6.5	10.3	2.1	8.0	16.0	Q1
SN74HC368DRG4	SOIC	D	16	2500	330.0	16.4	6.5	10.3	2.1	8.0	16.0	Q1
SN74HC368NSR	SOP	NS	16	2000	330.0	16.4	8.1	10.4	2.5	12.0	16.0	Q1
SN74HC368PWR	TSSOP	PW	16	2000	330.0	12.4	6.9	5.6	1.6	8.0	12.0	Q1

TAPE AND REEL BOX DIMENSIONS

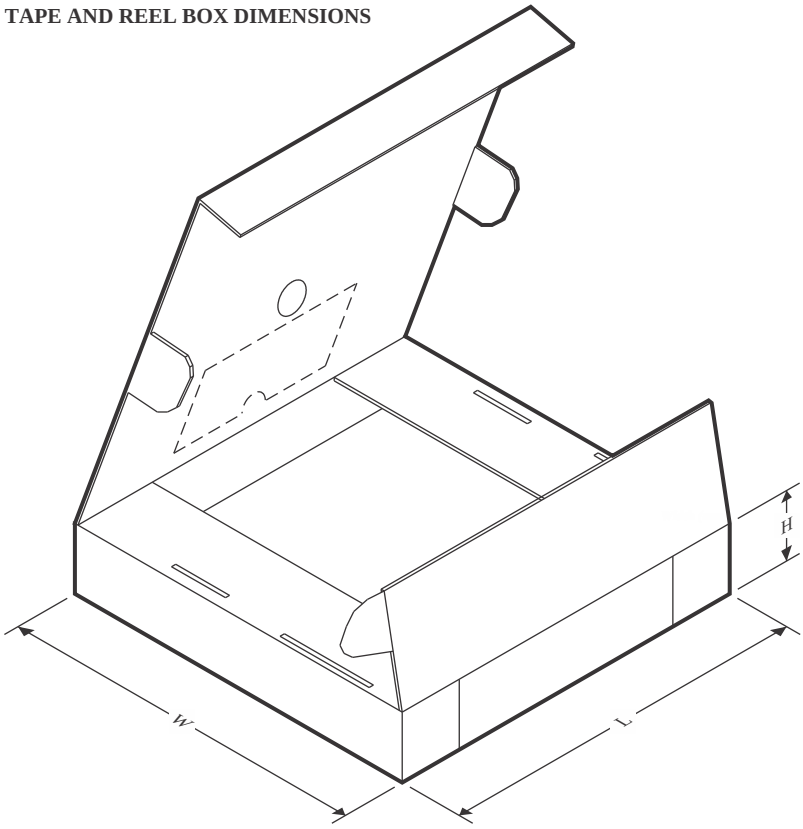

*All dimensions are nominal

Device	Package Type	Package Drawing	Pins	SPQ	Length (mm)	Width (mm)	Height (mm)
SN74HC368DR	SOIC	D	16	2500	353.0	353.0	32.0
SN74HC368DRG4	SOIC	D	16	2500	353.0	353.0	32.0
SN74HC368NSR	SOP	NS	16	2000	353.0	353.0	32.0
SN74HC368PWR	TSSOP	PW	16	2000	356.0	356.0	35.0

TUBE

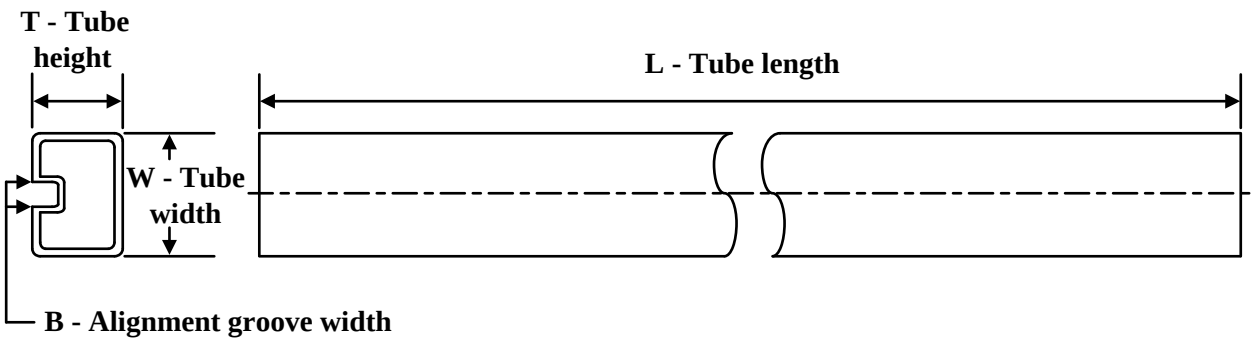

*All dimensions are nominal

Device	Package Name	Package Type	Pins	SPQ	L (mm)	W (mm)	T (µm)	B (mm)
5962-86812012A	FK	LCCC	20	55	506.98	12.06	2030	NA
SN74HC368N	N	PDIP	16	25	506	13.97	11230	4.32
SN74HC368N	N	PDIP	16	25	506	13.97	11230	4.32
SN74HC368N.A	N	PDIP	16	25	506	13.97	11230	4.32
SN74HC368N.A	N	PDIP	16	25	506	13.97	11230	4.32
SN74HC368NE4	N	PDIP	16	25	506	13.97	11230	4.32
SN74HC368NE4	N	PDIP	16	25	506	13.97	11230	4.32
SNJ54HC368FK	FK	LCCC	20	55	506.98	12.06	2030	NA
SNJ54HC368FK.A	FK	LCCC	20	55	506.98	12.06	2030	NA

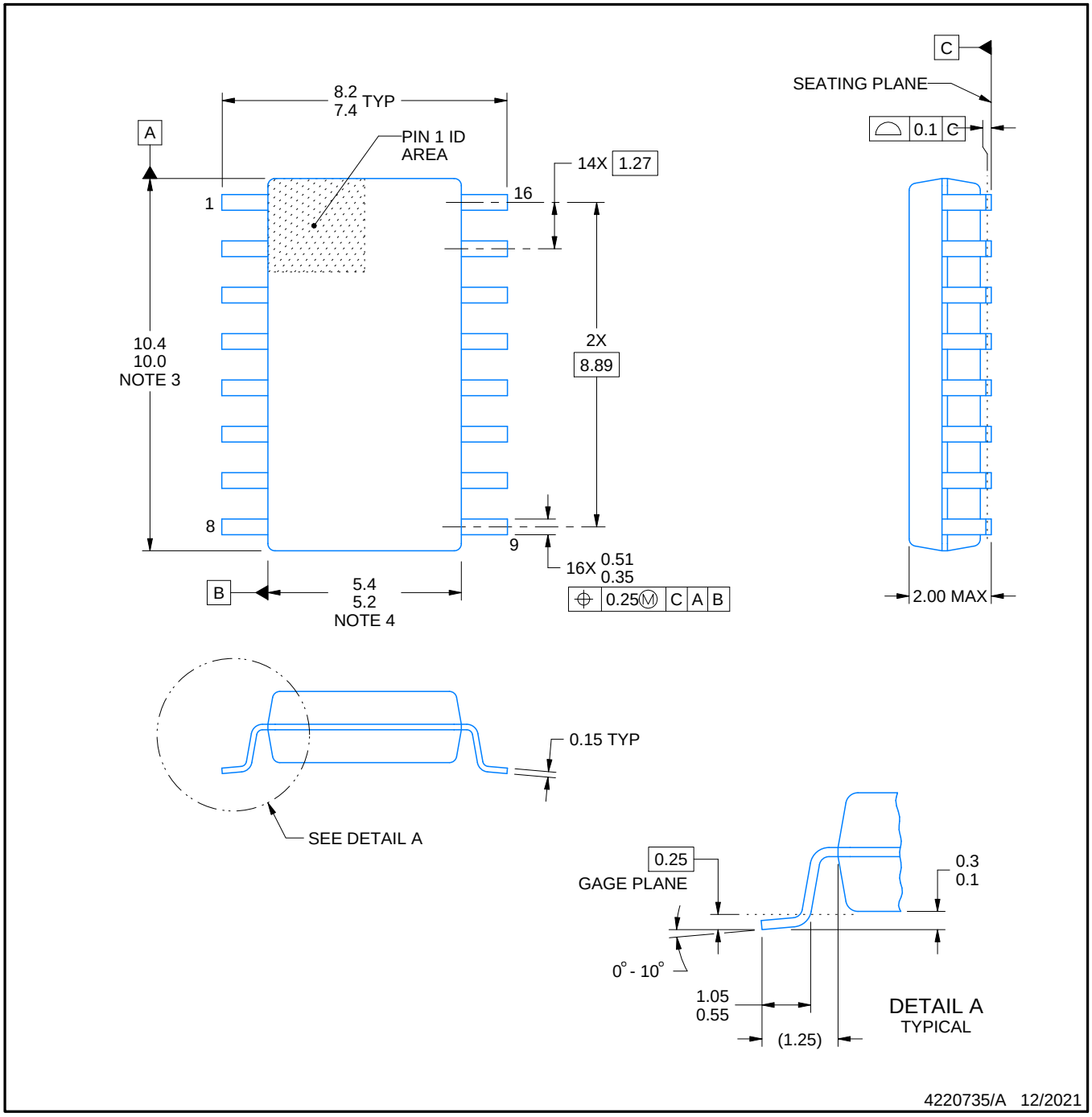

NOTES:

1. All linear dimensions are in millimeters. Dimensions in parenthesis are for reference only. Dimensioning and tolerancing per ASME Y14.5M.
2. This drawing is subject to change without notice.
3. This dimension does not include mold flash, protrusions, or gate burrs. Mold flash, protrusions, or gate burrs shall not exceed 0.15 mm, per side.
4. This dimension does not include interlead flash. Interlead flash shall not exceed 0.25 mm, per side.

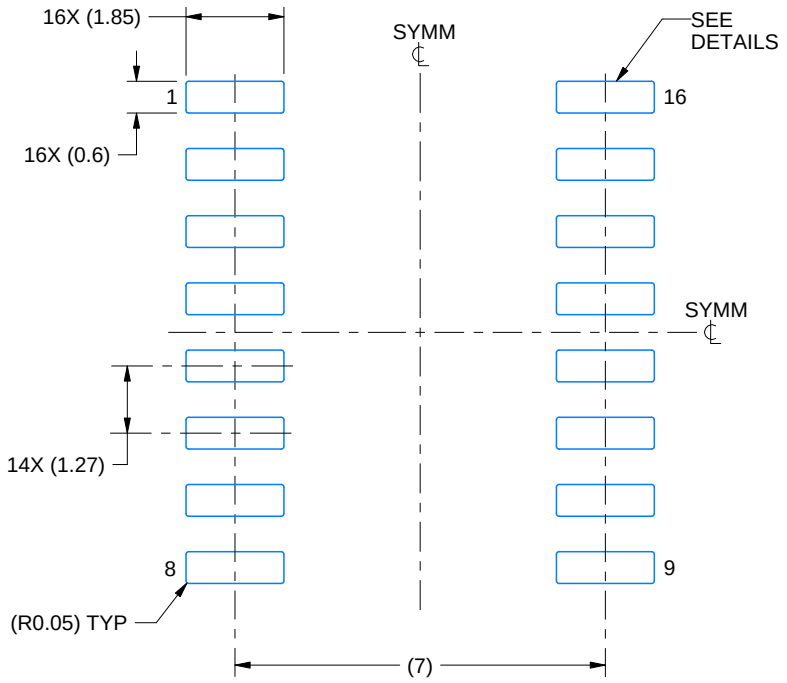

LAND PATTERN EXAMPLE
SCALE:7X

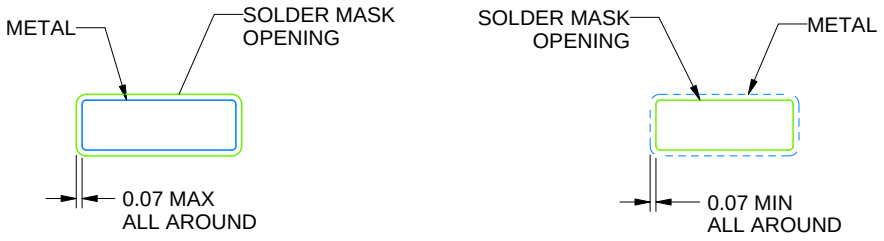

NON SOLDER MASK DEFINED

SOLDER MASK DEFINED

SOLDER MASK DETAILS

4220735/A 12/2021

NOTES: (continued)

5. Publication IPC-7351 may have alternate designs.
6. Solder mask tolerances between and around signal pads can vary based on board fabrication site.

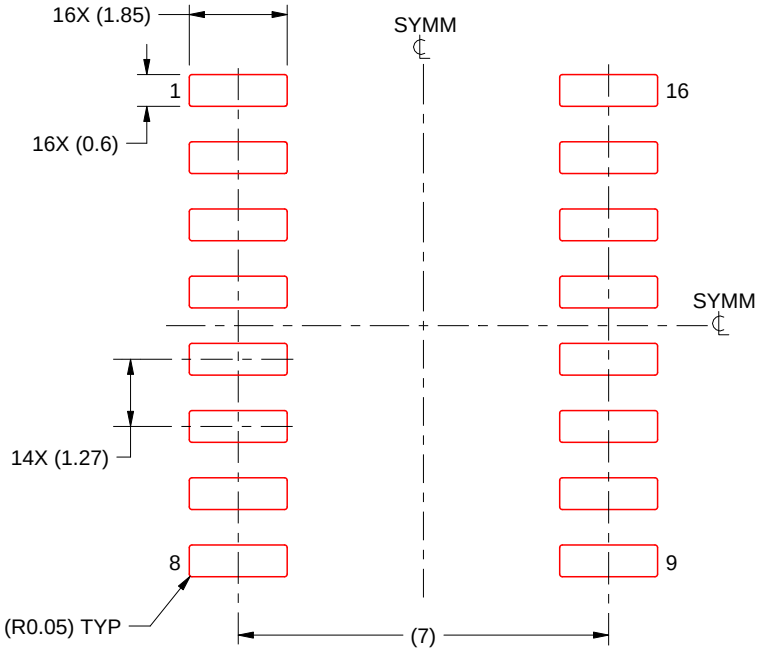

SOLDER PASTE EXAMPLE
BASED ON 0.125 mm THICK STENCIL
SCALE:7X

4220735/A 12/2021

NOTES: (continued)

7. Laser cutting apertures with trapezoidal walls and rounded corners may offer better paste release. IPC-7525 may have alternate design recommendations.
8. Board assembly site may have different recommendations for stencil design.

D (R–PDSO–G16) PLASTIC SMALL OUTLINE

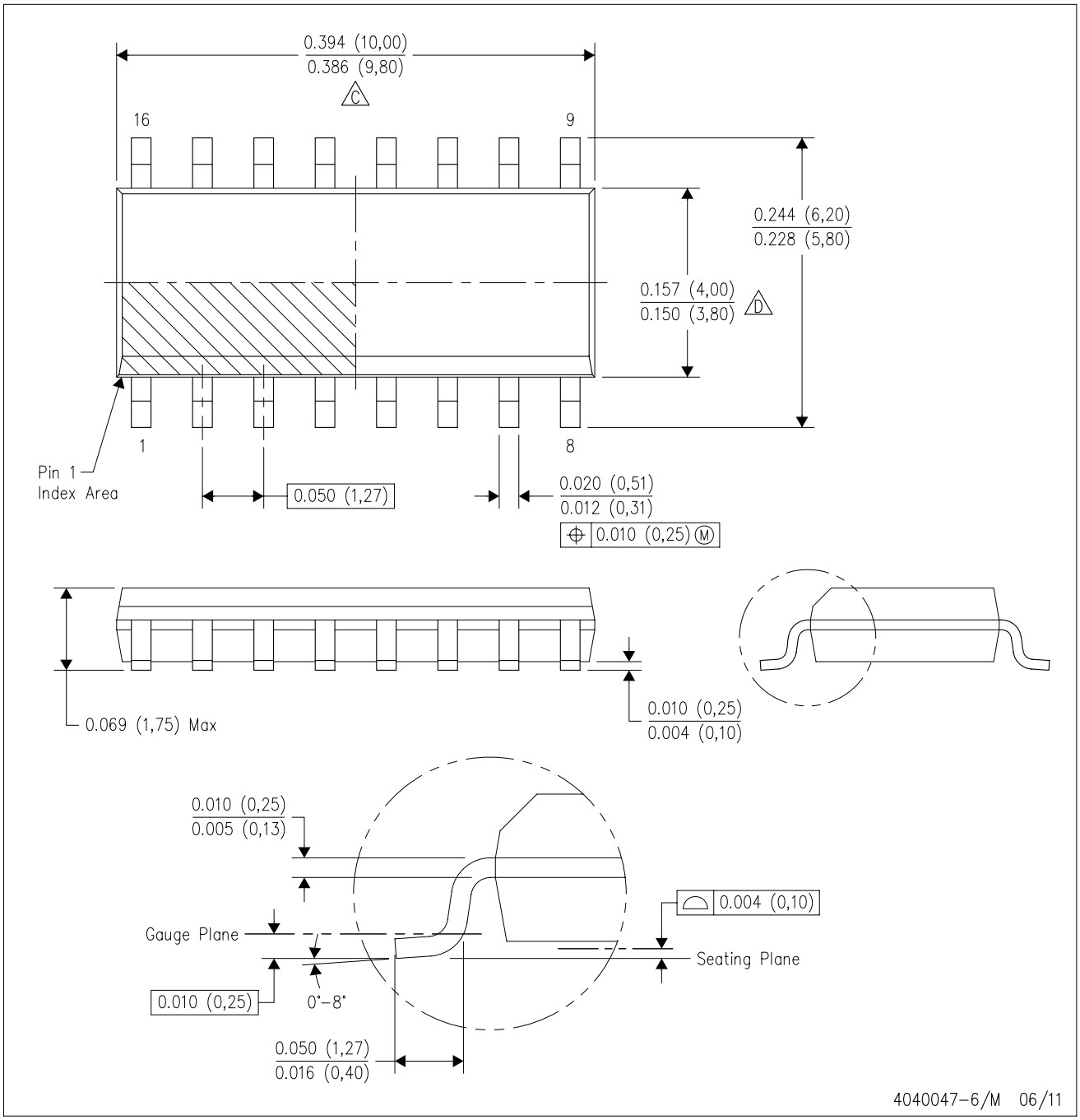

NOTES:
A. All linear dimensions are in inches (millimeters).
B. This drawing is subject to change without notice.
C. Body length does not include mold flash, protrusions, or gate burrs. Mold flash, protrusions, or gate burrs shall not exceed 0.006 (0,15) each side.
D. Body width does not include interlead flash. Interlead flash shall not exceed 0.017 (0,43) each side.
E. Reference JEDEC MS–012 variation AC.

GENERIC PACKAGE VIEW

FK 20

LCCC - 2.03 mm max height

8.89 x 8.89, 1.27 mm pitch

LEADLESS CERAMIC CHIP CARRIER

This image is a representation of the package family, actual package may vary.
Refer to the product data sheet for package details.

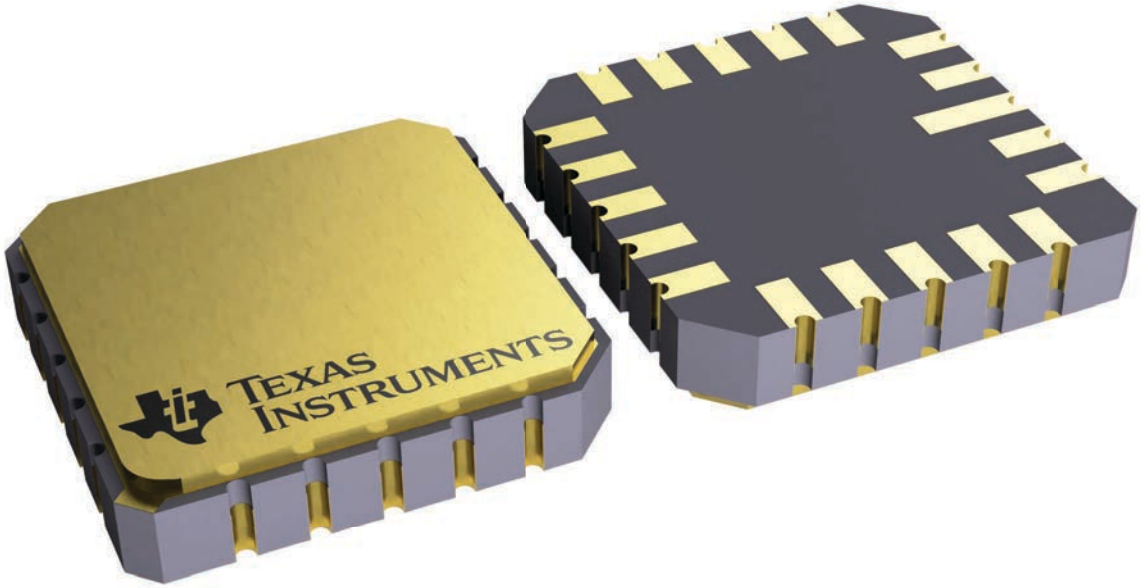

4229370VA\

J (R–GDIP–T**) CERAMIC DUAL IN–LINE PACKAGE

14 LEADS SHOWN

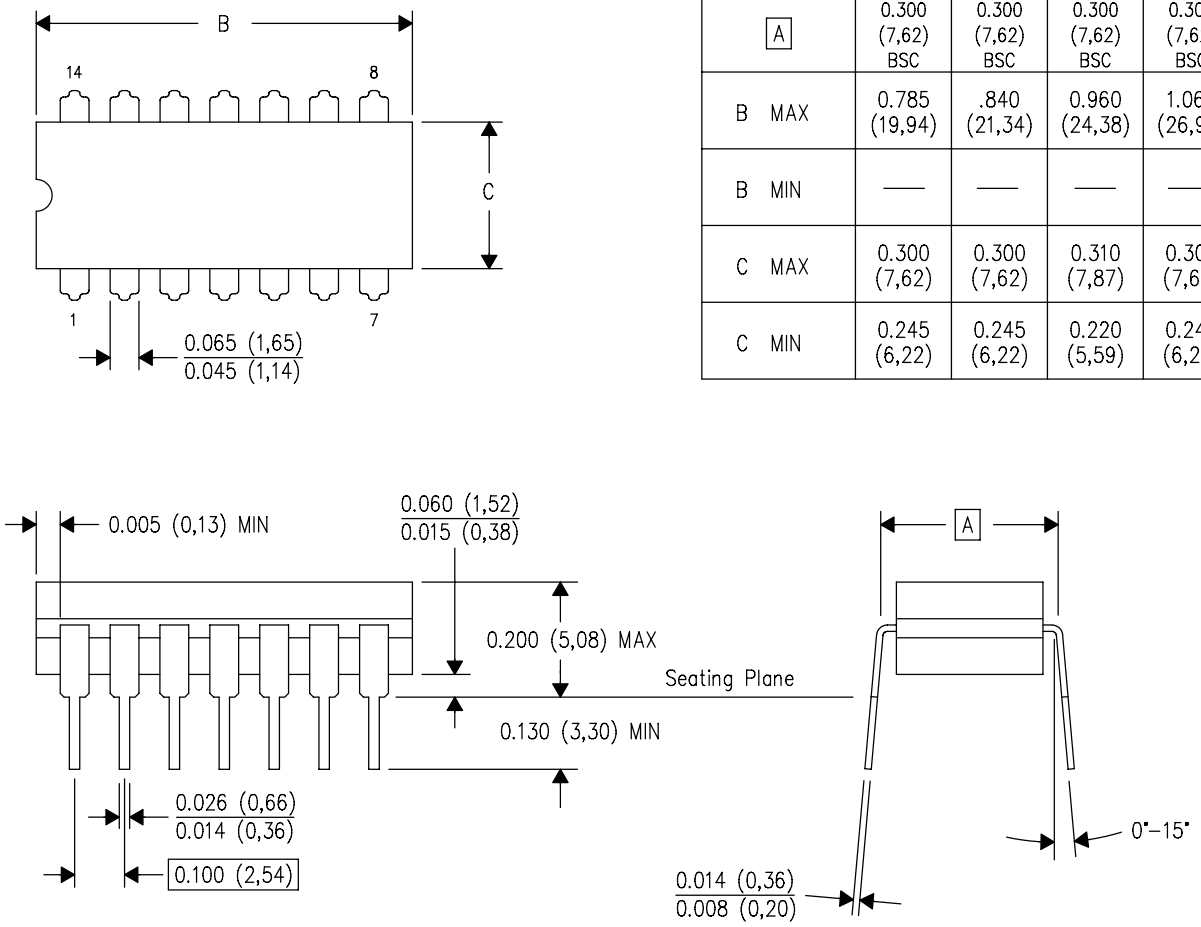

DIM \ PINS **	14	16	18	20
A	0.300 (7,62) BSC	0.300 (7,62) BSC	0.300 (7,62) BSC	0.300 (7,62) BSC
B MAX	0.785 (19,94)	.840 (21,34)	0.960 (24,38)	1.060 (26,92)
B MIN	—	—	—	—
C MAX	0.300 (7,62)	0.300 (7,62)	0.310 (7,87)	0.300 (7,62)
C MIN	0.245 (6,22)	0.245 (6,22)	0.220 (5,59)	0.245 (6,22)

4040083/F 03/03

NOTES:
- A. All linear dimensions are in inches (millimeters).
- B. This drawing is subject to change without notice.
- C. This package is hermetically sealed with a ceramic lid using glass frit.
- D. Index point is provided on cap for terminal identification only on press ceramic glass frit seal only.
- E. Falls within MIL STD 1835 GDIP1–T14, GDIP1–T16, GDIP1–T18 and GDIP1–T20.

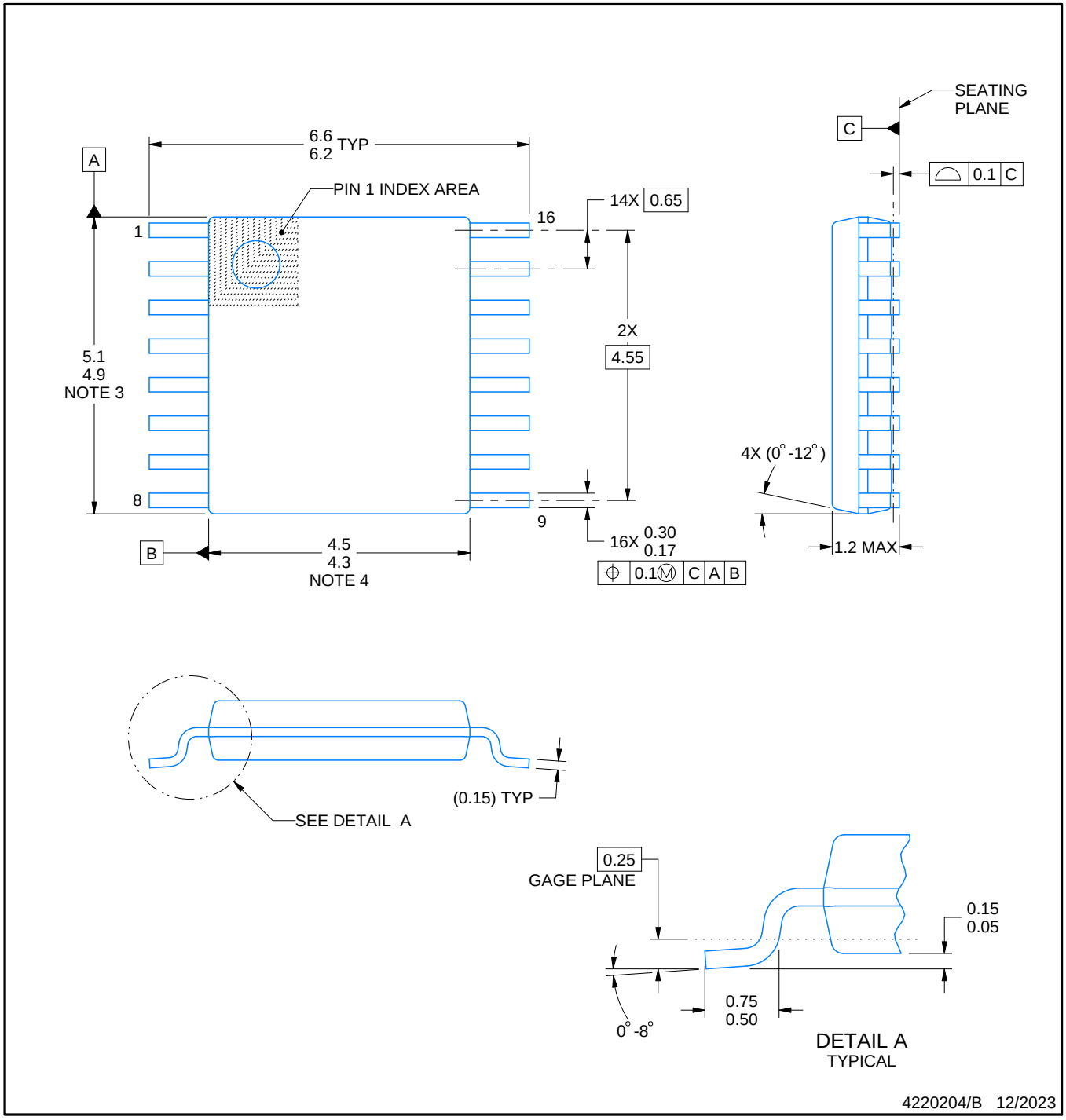

NOTES:

1. All linear dimensions are in millimeters. Any dimensions in parenthesis are for reference only. Dimensioning and tolerancing per ASME Y14.5M.
2. This drawing is subject to change without notice.
3. This dimension does not include mold flash, protrusions, or gate burrs. Mold flash, protrusions, or gate burrs shall not exceed 0.15 mm per side.
4. This dimension does not include interlead flash. Interlead flash shall not exceed 0.25 mm per side.
5. Reference JEDEC registration MO-153.

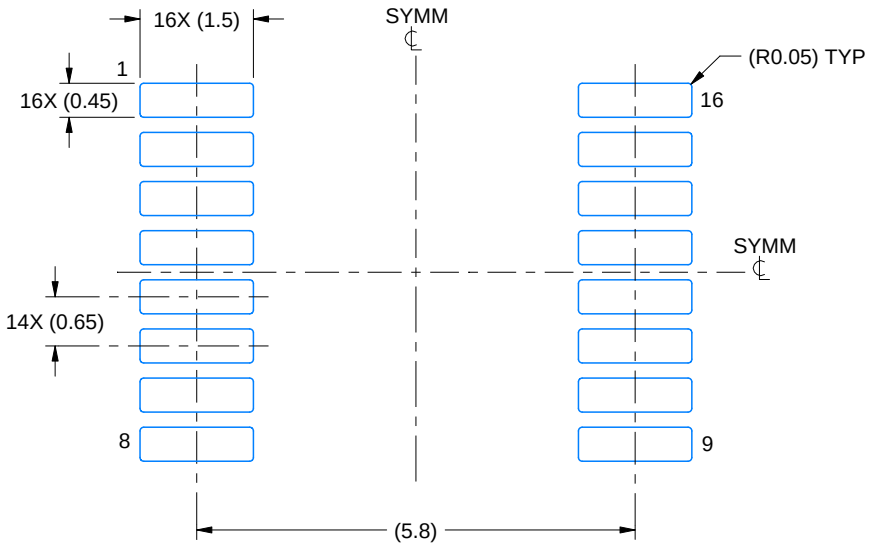

LAND PATTERN EXAMPLE
EXPOSED METAL SHOWN
SCALE: 10X

NON-SOLDER MASK DEFINED (PREFERRED)

SOLDER MASK DEFINED

SOLDER MASK DETAILS

4220204/B 12/2023

NOTES: (continued)

6. Publication IPC-7351 may have alternate designs.
7. Solder mask tolerances between and around signal pads can vary based on board fabrication site.

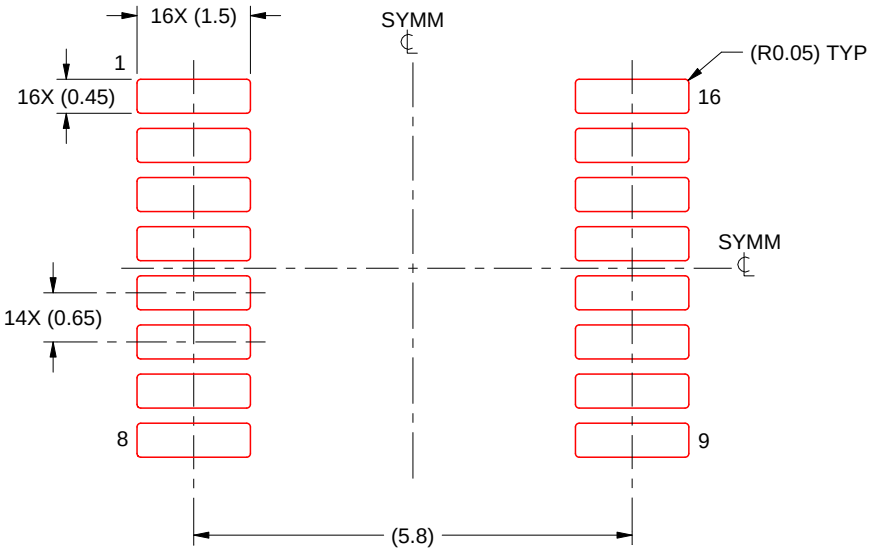

SOLDER PASTE EXAMPLE
BASED ON 0.125 mm THICK STENCIL
SCALE: 10X

4220204/B 12/2023

NOTES: (continued)

8. Laser cutting apertures with trapezoidal walls and rounded corners may offer better paste release. IPC-7525 may have alternate design recommendations.
9. Board assembly site may have different recommendations for stencil design.

N (R–PDIP–T**) PLASTIC DUAL–IN–LINE PACKAGE

16 PINS SHOWN

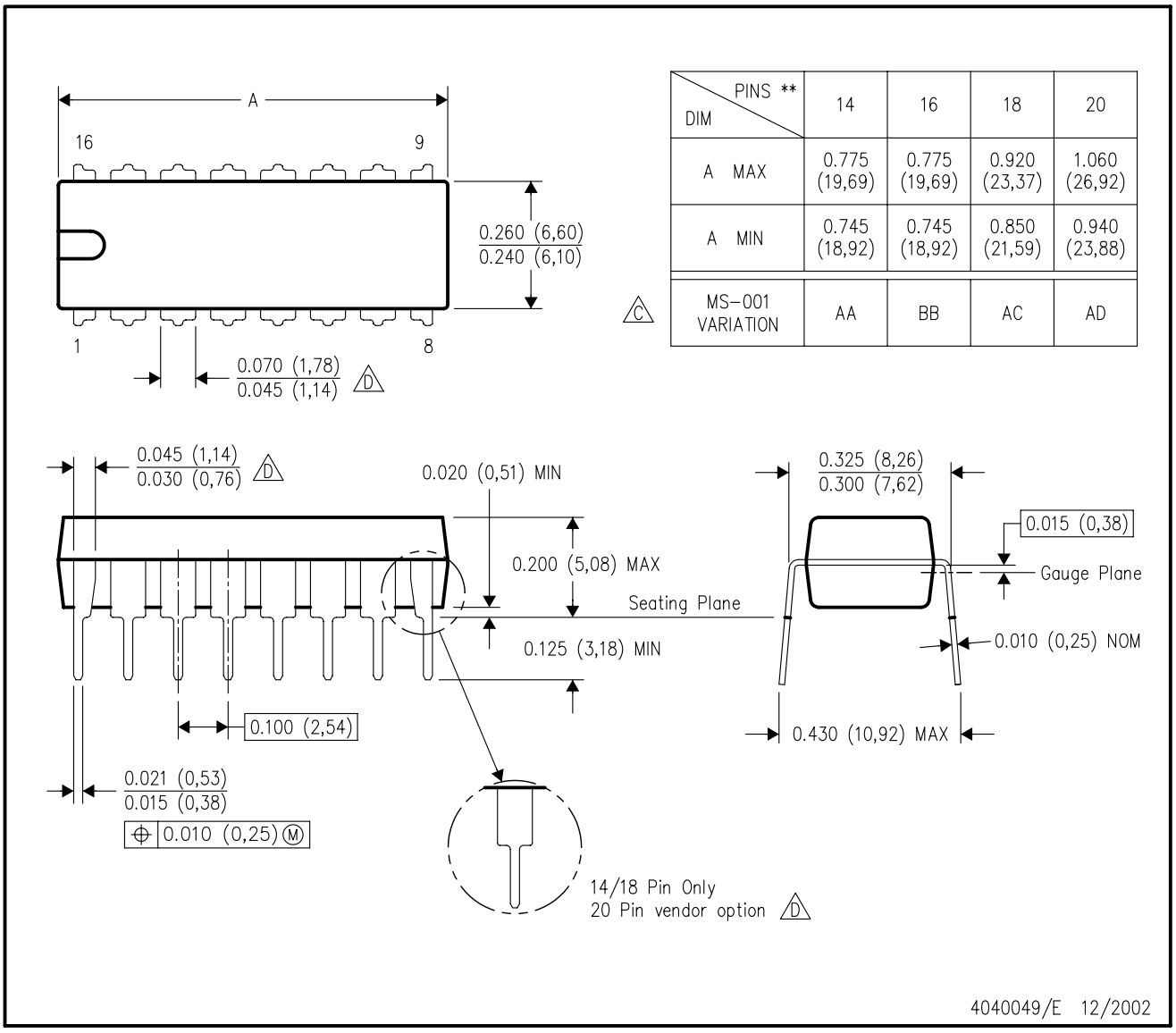

DIM \ PINS **	14	16	18	20
A MAX	0.775 (19,69)	0.775 (19,69)	0.920 (23,37)	1.060 (26,92)
A MIN	0.745 (18,92)	0.745 (18,92)	0.850 (21,59)	0.940 (23,88)
MS–001 VARIATION (C)	AA	BB	AC	AD

NOTES:
A. All linear dimensions are in inches (millimeters).
B. This drawing is subject to change without notice.
C. Falls within JEDEC MS–001, except 18 and 20 pin minimum body length (Dim A).
D. The 20 pin end lead shoulder width is a vendor option, either half or full width.

重要なお知らせと免責事項

TI は、技術データと信頼性データ (データシートを含みます)、設計リソース (リファレンス デザインを含みます)、アプリケーションや設計に関する各種アドバイス、Web ツール、安全性情報、その他のリソースを、欠陥が存在する可能性のある「現状のまま」提供しており、商品性および特定目的に対する適合性の黙示保証、第三者の知的財産権の非侵害保証を含むいかなる保証も、明示的または黙示的にかかわらず拒否します。

これらのリソースは、TI 製品を使用する設計の経験を積んだ開発者への提供を意図したものです。(1) お客様のアプリケーションに適した TI 製品の選定、(2) お客様のアプリケーションの設計、検証、試験、(3) お客様のアプリケーションに該当する各種規格や、その他のあらゆる安全性、セキュリティ、規制、または他の要件への確実な適合に関する責任を、お客様のみが単独で負うものとします。

上記の各種リソースは、予告なく変更される可能性があります。これらのリソースは、リソースで説明されている TI 製品を使用するアプリケーションの開発の目的でのみ、TI はその使用をお客様に許諾します。これらのリソースに関して、他の目的で複製することや掲載することは禁止されています。TI や第三者の知的財産権のライセンスが付与されている訳ではありません。お客様は、これらのリソースを自身で使用した結果発生するあらゆる申し立て、損害、費用、損失、責任について、TI およびその代理人を完全に補償するものとし、TI は一切の責任を拒否します。

TI の製品は、 TI の販売条件 、 TI の総合的な品質ガイドライン 、 ti.com または TI 製品などに関連して提供される他の適用条件に従い提供されます。TI がこれらのリソースを提供することは、適用される TI の保証または他の保証の放棄の拡大や変更を意味するものではありません。 TI がカスタム、またはカスタマー仕様として明示的に指定していない限り、TI の製品は標準的なカタログに掲載される汎用機器です。

お客様がいかなる追加条項または代替条項を提案する場合も、TI はそれらに異議を唱え、拒否します。

Copyright © 2026, Texas Instruments Incorporated

最終更新日：2025 年 10 月