SNx4HC74 デュアル D タイプ、ポジティブ・エッジ・トリガ・フリップ・フロップ、クリアおよびプリセット付

1 特長

- バッファ付き入力
- 広い動作電圧範囲:2V～6V
- 広い動作温度範囲:-40℃～+85℃
- 最大 10 個の LSTTL 負荷ファンアウトに対応
- LSTTL ロジック IC に比べて消費電力を大幅削減

2 アプリケーション

- モメンタリ・スイッチからトグル・スイッチへの変換
- クロック信号の 2 分割または 4 分割

3 概要

SNx4HC74 デバイスには、2 つの独立した D タイプ正エッジ・トリガ型フリップ・フロップが内蔵されており、それぞれに非同期のプリセット・ピンとクリア・ピンがあります。

製品情報 (1)

部品番号	パッケージ	本体サイズ (公称)
SN74HC74D	SOIC (14)	8.70mm × 3.90mm
SN74HC74DB	SSOP (14)	6.50mm × 5.30mm
SN74HC74N	PDIP (14)	19.30mm × 6.40mm
SN74HC74NS	SO (14)	10.20mm × 5.30mm
SN74HC74PW	TSSOP (14)	5.00mm × 4.40mm
SN54HC74J	CDIP (14)	21.30mm × 7.60mm
SN54HC74W	CFP (14)	9.20mm × 6.29mm
SN54HC74FK	LCCC (20)	8.90mm × 8.90mm

(1) 利用可能なパッケージについては、このデータシートの末尾にある注文情報を参照してください。

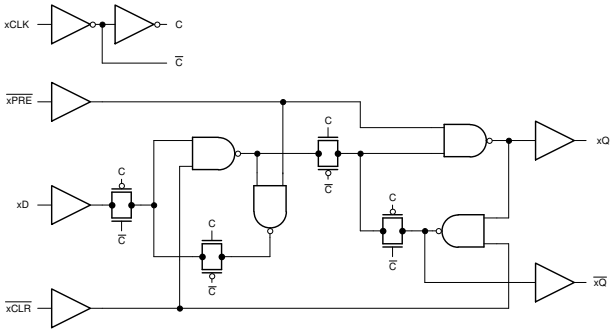

機能的なピン配置

英語版の TI 製品についての情報を翻訳したこの資料は、製品の概要を確認する目的で便宜的に提供しているものです。該当する正式な英語版の最新情報は、www.ti.com で閲覧でき、その内容が常に優先されます。TI では翻訳の正確性および妥当性につきましては一切保証いたしません。実際の設計などの前には、必ず最新版の英語版をご参照くださいますようお願いいたします。

Table of Contents

1 特長 ... 1
2 アプリケーション ... 1
3 概要 ... 1
4 Revision History ... 2
5 Pin Configuration and Functions ... 3
Pin Functions ... 3
6 Specifications ... 4
6.1 Absolute Maximum Ratings ... 4
6.2 ESD Ratings ... 4
6.3 Recommended Operating Conditions ... 4
6.4 Thermal Information ... 5
6.5 Electrical Characteristics - 74 ... 5
6.6 Electrical Characteristics - 54 ... 6
6.7 Timing Requirements - 74 ... 6
6.8 Timing Requirements - 54 ... 7
6.9 Switching Characteristics - 74 ... 7
6.10 Switching Characteristics - 54 ... 8
6.11 Operating Characteristics ... 8
6.12 Typical Characteristics ... 8
7 Parameter Measurement Information ... 9
8 Detailed Description ... 10
8.1 Overview ... 10
8.2 Functional Block Diagram ... 10
8.3 Feature Description ... 10
8.4 Device Functional Modes ... 11
9 Application and Implementation ... 12
9.1 Application Information ... 12
9.2 Typical Application ... 12
10 Power Supply Recommendations ... 15
11 Layout ... 16
11.1 Layout Guidelines ... 16
11.2 Layout Example ... 16
12 Device and Documentation Support ... 17
12.1 Documentation Support ... 17
12.2 サポート・リソース ... 17
12.3 Trademarks ... 17
12.4 静電気放電に関する注意事項 ... 17
12.5 用語集 ... 17
13 Mechanical, Packaging, and Orderable Information ... 17

4 Revision History

資料番号末尾の英字は改訂を表しています。その改訂履歴は英語版に準じています。

Changes from Revision E (December 2015) to Revision F (June 2021) — **Page**

- 新しいデータシート標準に更新 ... 1
- $R_{\theta JA}$ increased for the D (86 to 133.6 °C/W), DB (96 to 107.7 °C/W), NS (76 to 122.6 °C/W), and PW (113 to 151.7 °C/W) and decreased for the N package (80 to 61.9 °C/W) ... 5

Copyright © 2023 Texas Instruments Incorporated

5 Pin Configuration and Functions

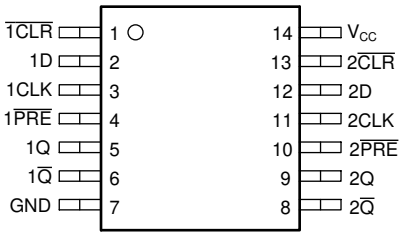

D, DB, N, NS, PW, J, or W Package
14-Pin SOIC, SSOP, PDIP, SO, TSSOP, CDIP, or CFP
Top View

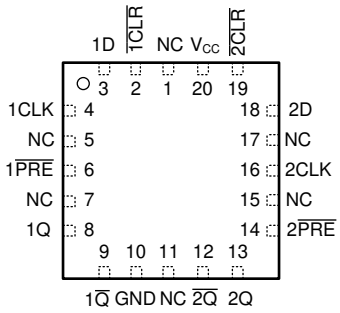

FK Package
20-Pin LCCC
Top View

Pin Functions

PIN			I/O	DESCRIPTION
NAME	D, DB, N, NS, PW, J, or W	FK		
1 $\overline{CLR}$	1	2	Input	Channel 1, Clear Input, Active Low
1D	2	3	Input	Channel 1, Data Input
1CLK	3	4	Input	Channel 1, Positive edge triggered clock input
1 $\overline{PRE}$	4	6	Input	Channel 1, Preset Input, Active Low
1Q	5	8	Output	Channel 1, Output
1 $\overline{Q}$	6	9	Output	Channel 1, Inverted Output
GND	7	10	—	Ground
2 $\overline{Q}$	8	12	Output	Channel 2, Inverted Output
2Q	9	13	Output	Channel 2, Output
2 $\overline{PRE}$	10	14	Input	Channel 2, Preset Input, Active Low
2CLK	11	16	Input	Channel 2, Positive edge triggered clock input
2D	12	18	Input	Channel 2, Data Input
2 $\overline{CLR}$	13	19	Input	Channel 2, Clear Input, Active Low
V_{CC}	14	20	—	Positive Supply
NC		1, 5, 7, 11, 15, 17	—	Not internally connected

Copyright © 2023 Texas Instruments Incorporated

6 Specifications

6.1 Absolute Maximum Ratings

over operating free-air temperature range (unless otherwise noted)[1]

			MIN	MAX	UNIT
V_{CC}	Supply voltage		–0.5	7	V
I_{IK}	Input clamp current[2]	V_I < –0.5 V or V_I > V_{CC}		±20	mA
I_{OK}	Output clamp current[2]	V_I < –0.5 V or V_I > V_{CC}		±20	mA
I_O	Continuous output current	V_O = 0 to V_{CC}		±25	mA
	Continuous current through V_{CC} or GND			±50	mA
T_J	Junction temperature[3]			150	°C
T_{stg}	Storage temperature		–65	150	°C

(1) Stresses beyond those listed under *Absolute Maximum Rating* may cause permanent damage to the device. These are stress ratings only, which do not imply functional operation of the device at these or any other conditions beyond those indicated under *Recommended Operating Condition*. Exposure to absolute-maximum-rated conditions for extended periods may affect device reliability.
(2) The input and output voltage ratings may be exceeded if the input and output current ratings are observed.
(3) Guaranteed by design.

6.2 ESD Ratings

			VALUE	UNIT
$V_{(ESD)}$	Electrostatic discharge	Human-body model (HBM), per ANSI/ESDA/JEDEC JS-001[1]	±2000	V
		Charged-device model (CDM), per JEDEC specification JESD22-C101[2]	±1500	

(1) JEDEC document JEP155 states that 500-V HBM allows safe manufacturing with a standard ESD control process.
(2) JEDEC document JEP157 states that 250-V CDM allows safe manufacturing with a standard ESD control process.

6.3 Recommended Operating Conditions

over operating free-air temperature range (unless otherwise noted)

			MIN	NOM	MAX	UNIT
V_{CC}	Supply voltage		2	5	6	V
V_{IH}	High-level input voltage	V_{CC} = 2 V	1.5			V
		V_{CC} = 4.5 V	3.15			
		V_{CC} = 6 V	4.2			
V_{IL}	Low-level input voltage	V_{CC} = 2 V			0.5	V
		V_{CC} = 4.5 V			1.35	
		V_{CC} = 6 V			1.8	
V_I	Input voltage		0		V_{CC}	V
V_O	Output voltage		0		V_{CC}	V
Δt/Δv	Input transition rise and fall rate	V_{CC} = 2 V			1000	ns
		V_{CC} = 4.5 V			500	
		V_{CC} = 6 V			400	
T_A	Operating free-air temperature	SN54HC00	–55		125	°C
		SN74HC00	–40		85	

Copyright © 2023 Texas Instruments Incorporated

6.4 Thermal Information

THERMAL METRIC[1]		SN74HC74					SN54HC74			UNIT
		D (SOIC)	DB (SSOP)	N (PDIP)	NS (SO)	PW (TSSOP)	J (CDIP)	W (CFP)	FK (LCCC)	
		14 PINS	14 PINS	14 PINS	14 PINS	14 PINS	14 PINS	14 PINS	20 PINS	
$R_{\theta JA}$	Junction-to-ambient thermal resistance	133.6	107.7	61.9	122.6	151.7	N/A	N/A	N/A	°C/W
$R_{\theta JC(top)}$	Junction-to-case (top) thermal resistance	89.0	57.4	49.7	81.8	79.4	15.05	14.65	5.61	°C/W
$R_{\theta JB}$	Junction-to-board thermal resistance	89.5	57.9	41.7	83.8	94.7	N/A	N/A	N/A	°C/W
Ψ_{JT}	Junction-to-top characterization parameter	45.5	17.6	29.3	45.4	25.2	N/A	N/A	N/A	°C/W
Ψ_{JB}	Junction-to-board characterization parameter	89.1	57.2	41.4	83.4	94.1	N/A	N/A	N/A	°C/W
$R_{\theta JC(bot)}$	Junction-to-case (bottom) thermal resistance	N/A	N/A	N/A	N/A	N/A	N/A	N/A	N/A	°C/W

(1) For more information about traditional and new thermal metrics, see the Semiconductor and IC Package Thermal Metrics application report.

6.5 Electrical Characteristics - 74

over operating free-air temperature range; typical values measured at T_A = 25°C (unless otherwise noted).

PARAMETER		TEST CONDITIONS		V_{CC}	Operating free-air temperature (T_A)						UNIT
					25°C			-40°C to 85°C			
					MIN	TYP	MAX	MIN	TYP	MAX	
V_{OH}	High-level output voltage	$V_I = V_{IH}$ or V_{IL}	I_{OH} = –20 µA	2 V	1.9	1.998		1.9			V
				4.5 V	4.4	4.499		4.4			
				6 V	5.9	5.999		5.9			
			I_{OH} = –4 mA	4.5 V	3.98	4.3		3.84			
			I_{OH} = –5.2 mA	6 V	5.48	5.8		5.34			
V_{OL}	Low-level output voltage	$V_I = V_{IH}$ or V_{IL}	I_{OL} = 20 µA	2 V		0.002	0.1			0.1	V
				4.5 V		0.001	0.1			0.1	
				6 V		0.001	0.1			0.1	
			I_{OL} = 4 mA	4.5 V		0.17	0.26			0.33	
			I_{OL} = 5.2 mA	6 V		0.15	0.26			0.33	
I_I	Input leakage current	$V_I = V_{CC}$ or 0		6 V			±0.1			±1	µA
I_{CC}	Supply current	$V_I = V_{CC}$ or 0	I_O = 0	6 V			4			40	µA
C_i	Input capacitance			2 V to 6 V		3	10			10	pF

6.6 Electrical Characteristics - 54

over operating free-air temperature range; typical values measured at TA = 25°C (unless otherwise noted).

PARAMETER		TEST CONDITIONS		V_{CC}	Operating free-air temperature (T_A)									UNIT
					25°C			–40°C to 85°C			–55°C to 125°C			
					MIN	TYP	MAX	MIN	TYP	MAX	MIN	TYP	MAX	
V_{OH}	High-level output voltage	$V_I = V_{IH}$ or V_{IL}	I_{OH} = -20 µA	2 V	1.9	1.998		1.9			1.9			V
				4.5 V	4.4	4.499		4.4			4.4			
				6 V	5.9	5.999		5.9			5.9			
			I_{OH} = -6 mA	4.5 V	3.98	4.3		3.84			3.7			
			I_{OH} = -7.8 mA	6 V	5.48	5.8		5.34			5.2			
V_{OL}	Low-level output voltage	$V_I = V_{IH}$ or V_{IL}	I_{OL} = 20 µA	2 V		0.002	0.1			0.1			0.1	V
				4.5 V		0.001	0.1			0.1			0.1	
				6 V		0.001	0.1			0.1			0.1	
			I_{OL} = 6 mA	4.5 V		0.17	0.26			0.33			0.4	
			I_{OL} = 7.8 mA	6 V		0.15	0.26			0.33			0.4	
I_I	Input leakage current	$V_I = V_{CC}$ or 0		6 V			±0.1			±1			±1	µA
I_{CC}	Supply current	$V_I = V_{CC}$ or 0	I_O = 0	6 V			2			20			40	µA
C_i	Input capacitance			2 V to 6 V		3	10			10			10	pF

6.7 Timing Requirements - 74

over operating free-air temperature range (unless otherwise noted)

			V_{CC}	Operating free-air temperature (T_A)						UNIT
				25°C			–40°C to 85°C			
				MIN	TYP	MAX	MIN	TYP	MAX	
f_{clock}	Clock frequency		2 V			6			5	MHz
			4.5 V			31			25	
			6 V	0		36	0		29	
t_w	Pulse duration	$\overline{PRE}$ or $\overline{CLR}$ low	2 V			100			125	ns
			4.5 V			20			25	
			6 V			14			21	
		CLK high or low	2 V			80			100	
			4.5 V			16			20	
			6 V			14			17	
t_{su}	Setup time before CLK ↑	Data	2 V			100			125	ns
			4.5 V			20			25	
			6 V			17			21	
		$\overline{PRE}$ or $\overline{CLR}$ inactive	2 V			25			30	
			4.5 V			5			6	
			6 V			4			5	
$_{th}$	Hold time, data after CLK ↑		2 V	0			0			ns
			4.5 V	0			0			
			6 V	0			0			

Copyright © 2023 Texas Instruments Incorporated

6.8 Timing Requirements - 54

over operating free-air temperature range; typical values measured at TA = 25°C (unless otherwise noted).

			V_{CC}	Operating free-air temperature (T_A)									UNIT
				25°C			–40°C to 85°C			–55°C to 125°C			
				MIN	TYP	MAX	MIN	TYP	MAX	MIN	TYP	MAX	
f_{clock}	Clock frequency		2 V			6			5			4.2	ns
			4.5 V			31			25			21	
			6 V	0		36	0		29	0		25	
t_w	Pulse duration	$\overline{PRE}$ or $\overline{CLR}$ low	2 V			100			125			150	ns
			4.5 V			20			25			30	
			6 V			14			21			25	
		CLK high or low	2 V			80			100			120	
			4.5 V			16			20			24	
			6 V			14			17			20	
t_{su}	Setup time before CLK ↑	Data	2 V			100			125			150	ns
			4.5 V			20			25			30	
			6 V			17			21			25	
		$\overline{PRE}$ or $\overline{CLR}$ inactive	2 V			25			30			40	
			4.5 V			5			6			8	
			6 V			4			5			7	
th	Hold time, data after CLK ↑		2 V	0			0			0			MHz
			4.5 V	0			0			0			
			6 V	0			0			0			

6.9 Switching Characteristics - 74

over operating free-air temperature range (unless otherwise noted)

PARAMETER		FROM	TO	V_{CC}	Operating free-air temperature (T_A)						UNIT
					25°C			–40°C to 85°C			
					MIN	TYP	MAX	MIN	TYP	MAX	
f_{max}				2 V	6	10		6			MHz
				4.5 V	31	50		25			
				6 V	36	60		29			
t_{pd}	Propagation delay	PRE or CLR	Q or $\overline{Q}$	2 V		70	230			290	ns
				4.5 V		20	46			58	
				6 V		15	39			49	
		CLK	Q or $\overline{Q}$	2 V		70	175			220	
				4.5 V		20	35			44	
				6 V		15	30			39	
t_t	Transition-time		Q or $\overline{Q}$	2 V		28	75			95	ns
				4.5 V		8	15			19	
				6 V		6	13			16	

Copyright © 2023 Texas Instruments Incorporated

6.10 Switching Characteristics - 54

over operating free-air temperature range; typical values measured at TA = 25°C (unless otherwise noted).

PARAMETER		FROM	TO	V_{CC}	Operating free-air temperature (T_A)									UNIT
					25°C			–40°C to 85°C			–55°C to 125°C			
					MIN	TYP	MAX	MIN	TYP	MAX	MIN	TYP	MAX	
f_{max}				2 V	6	10		6			4.2			MHz
				4.5 V	31	50		25			21			
				6 V	36	60		29			25			
t_{pd}	Propagation delay	PRE or CLR	Q or $\overline{Q}$	2 V		70	230			290			345	ns
				4.5 V		20	46			58			69	
				6 V		15	39			49			59	
		CLK	Q or $\overline{Q}$	2 V		70	175			220			250	
				4.5 V		20	35			44			50	
				6 V		15	30			39			42	
t_t	Transition-time		Q or $\overline{Q}$	2 V		28	75			95			110	ns
				4.5 V		8	15			19			22	
				6 V		6	13			16			19	

6.11 Operating Characteristics

over operating free-air temperature range; typical values measured at T_A = 25°C (unless otherwise noted).

PARAMETER		TEST CONDITIONS	V_{CC}	MIN	TYP	MAX	UNIT
C_{pd}	Power dissipation capacitance per gate	No load	2 V to 6 V		35		pF

6.12 Typical Characteristics

T_A = 25°C

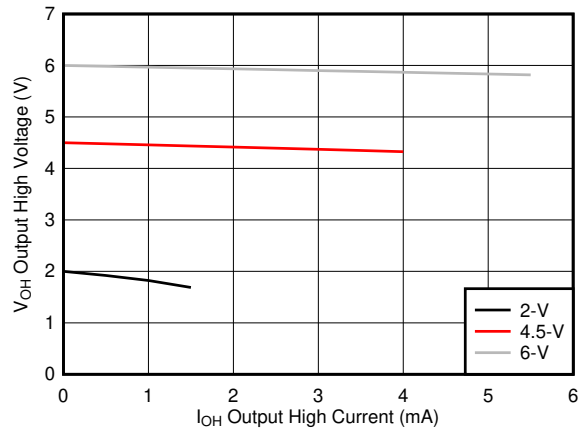

図 6-1. Typical output voltage in the high state (V_{OH})

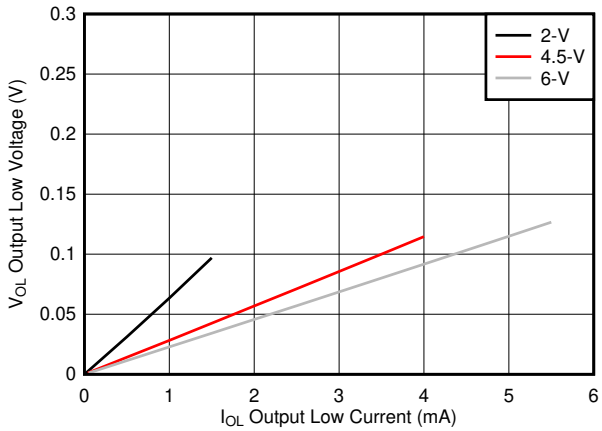

図 6-2. Typical output voltage in the low state (V_{OL})

Copyright © 2023 Texas Instruments Incorporated

7 Parameter Measurement Information

- Phase relationships between waveforms were chosen arbitrarily. All input pulses are supplied by generators having the following characteristics: PRR ≤ 1 MHz, Z_O = 50 Ω, t_t < 6 ns.
- The outputs are measured one at a time, with one input transition per measurement.

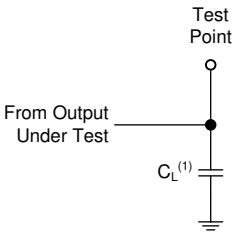

A. C_L= 50 pF and includes probe and jig capacitance.

図 7-1. Load Circuit

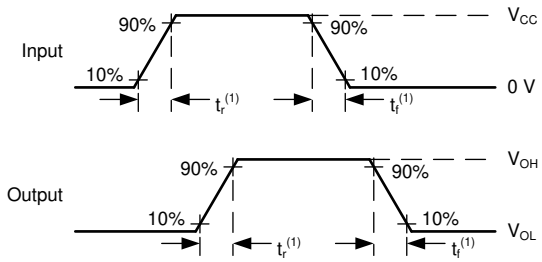

A. t_t is the greater of t_r and t_f.

図 7-2. Voltage Waveforms Transition Times

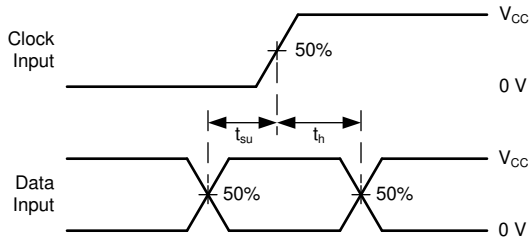

図 7-3. Voltage Waveforms Setup and Hold Times

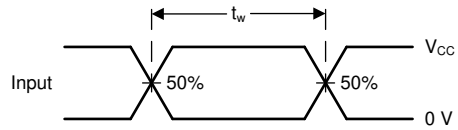

図 7-4. Voltage Waveforms Pulse Width

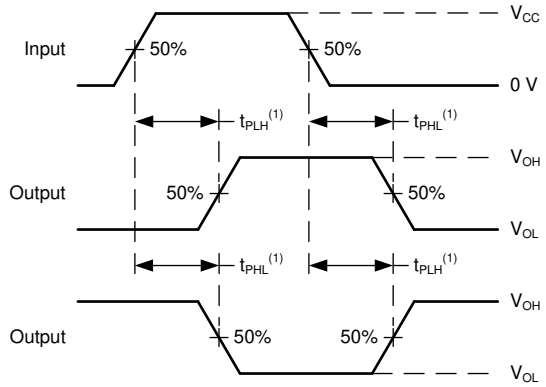

A. The maximum between t_{PLH} and t_{PHL} is used for t_{pd}.

図 7-5. Voltage Waveforms Propagation Delays

8 Detailed Description

8.1 Overview

The SNx4HC74 devices contain two independent D-type positive-edge-triggered flip-flops with asynchronous preset and clear pins for each.

8.2 Functional Block Diagram

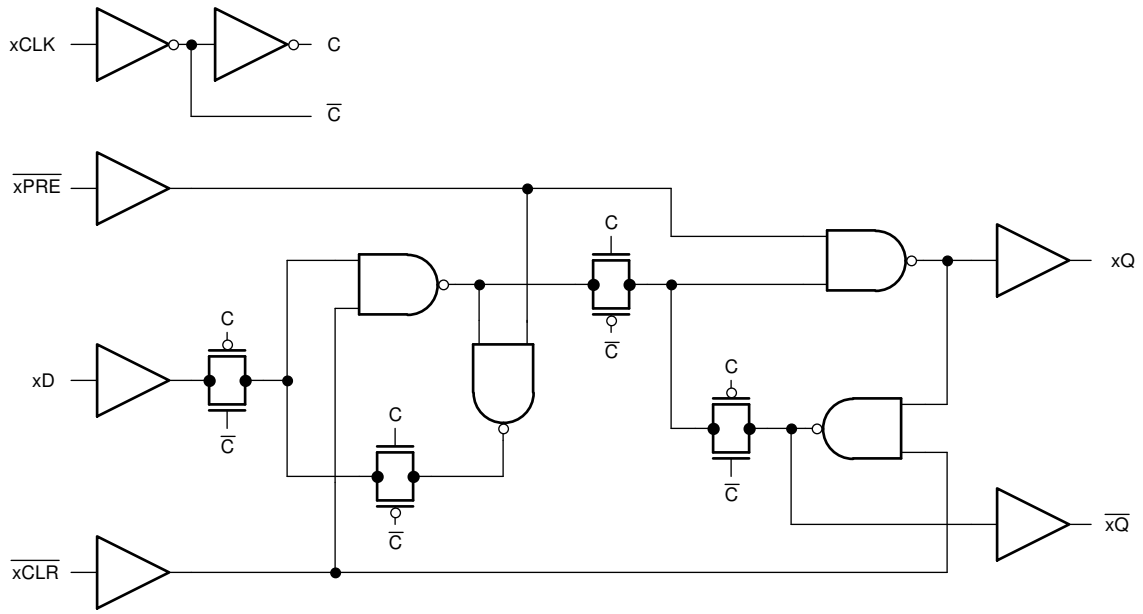

8.3 Feature Description

8.3.1 Balanced CMOS Push-Pull Outputs

A balanced output allows the device to sink and source similar currents. The drive capability of this device may create fast edges into light loads so routing and load conditions should be considered to prevent ringing. Additionally, the outputs of this device are capable of driving larger currents than the device can sustain without being damaged. It is important for the output power of the device to be limited to avoid damage due to over-current. The electrical and thermal limits defined in the *セクション 6.1* must be followed at all times.

The SN74HC74 can drive a load with a total capacitance less than or equal to the maximum load listed in the *セクション 6.9* connected to a high-impedance CMOS input while still meeting all of the datasheet specifications. Larger capacitive loads can be applied, however it is not recommended to exceed the provided load value. If larger capacitive loads are required, it is recommended to add a series resistor between the output and the capacitor to limit output current to the values given in the *セクション 6.1*.

8.3.2 Standard CMOS Inputs

Standard CMOS inputs are high impedance and are typically modeled as a resistor from the input to ground in parallel with the input capacitance given in the *セクション 6.5*. The worst case resistance is calculated with the maximum input voltage, given in the *セクション 6.1*, and the maximum input leakage current, given in the *セクション 6.5*, using ohm's law (R = V ÷ I).

Signals applied to the inputs need to have fast edge rates, as defined by the input transition time in the *セクション 6.3* to avoid excessive current consumption and oscillations. If a slow or noisy input signal is required, a device with a Schmitt-trigger input should be used to condition the input signal prior to the standard CMOS input.

Copyright © 2023 Texas Instruments Incorporated

8.3.3 Clamp Diode Structure

The inputs and outputs to this device have both positive and negative clamping diodes as depicted in 図 8-1.

> **注意**
>
> Voltages beyond the values specified in the セクション 6.1 table can cause damage to the device. The recommended input and output voltage ratings may be exceeded if the input and output clamp-current ratings are observed.

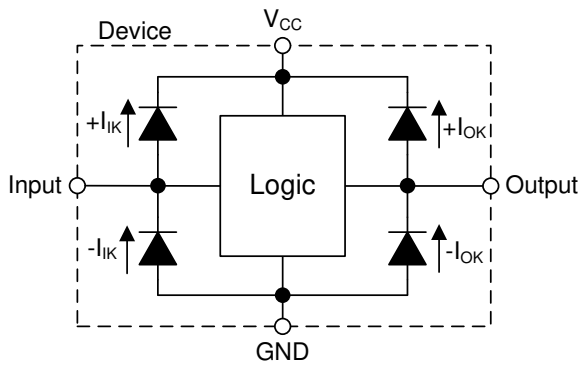

図 8-1. Electrical Placement of Clamping Diodes for Each Input and Output

8.4 Device Functional Modes

表 8-1. Function Table

INPUTS				OUTPUTS	
$\overline{PRE}$	$\overline{CLR}$	CLK	D	Q	$\overline{Q}$
L	H	X	X	H	L
H	L	X	X	L	H
L	L	X	X	H(1)	H(1)
H	H	↑	H	H	L
H	H	↑	L	L	H
H	H	L	X	Q_0	$\overline{Q}_0$

(1) This configuration is nonstable; that is, it does not persist when $\overline{PRE}$ or $\overline{CLR}$ returns to its inactive (high) level.

9 Application and Implementation

注

以下のアプリケーション情報は、TI の製品仕様に含まれるものではなく、TI ではその正確性または完全性を保証いたしません。個々の目的に対する製品の適合性については、お客様の責任で判断していただくことになります。また、お客様は自身の設計実装を検証しテストすることで、システムの機能を確認する必要があります。

9.1 Application Information

Toggle switches are typically large, mechanically complex and relatively expensive. It is desirable to use a momentary switch instead because they are small, mechanically simple and low cost. Some systems require a toggle switch's functionality but are space or cost constrained and must use a momentary switch instead.

If the data input (D) of the D-type flip-flop is tied to the inverted output ($\overline{Q}$), then each clock pulse will cause the value at the output (Q) to toggle. The momentary switch can be debounced and connected through a Schmitt-trigger buffer to the clock input (CLK) to toggle the output.

This application also utilizes a power-on reset circuit to ensure that the output always starts in the LOW state when power is applied.

9.2 Typical Application

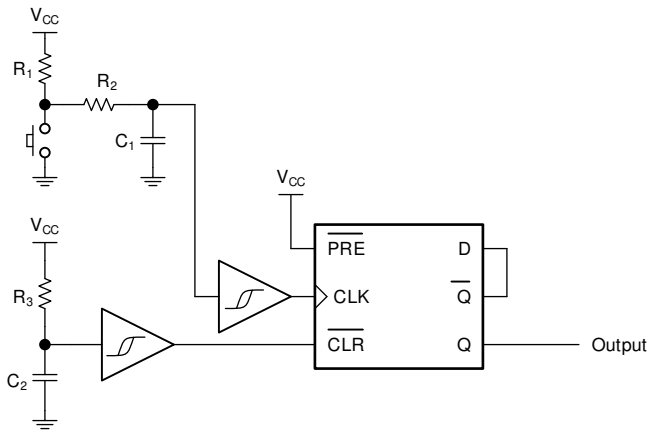

図 9-1. Typical application schematic

9.2.1 Design Requirements

9.2.1.1 Power Considerations

Ensure the desired supply voltage is within the range specified in the *セクション 6.3*. The supply voltage sets the device's electrical characteristics as described in the *セクション 6.5*.

The supply must be capable of sourcing current equal to the total current to be sourced by all outputs of the SN74HC74 plus the maximum supply current, I_{CC}, listed in the *セクション 6.5*. The logic device can only source or sink as much current as it is provided at the supply and ground pins, respectively. Be sure not to exceed the maximum total current through GND or V_{CC} listed in the *セクション 6.1*.

Total power consumption can be calculated using the information provided in CMOS Power Consumption and C_{pd} Calculation.

Thermal increase can be calculated using the information provided in Thermal Characteristics of Standard Linear and Logic (SLL) Packages and Devices.

Copyright © 2023 Texas Instruments Incorporated

> **注意**
>
> The maximum junction temperature, T_J(max) listed in the *セクション 6.1*, is an *additional limitation* to prevent damage to the device. Do not violate any values listed in the *セクション 6.1*. These limits are provided to prevent damage to the device.

9.2.1.2 Input Considerations

Unused inputs must be terminated to either V_{CC} or ground. These can be directly terminated if the input is completely unused, or they can be connected with a pull-up or pull-down resistor if the input is to be used sometimes, but not always. A pull-up resistor is used for a default state of HIGH, and a pull-down resistor is used for a default state of LOW. The resistor size is limited by drive current of the controller, leakage current into the SN74HC74, as specified in the *セクション 6.5*, and the desired input transition rate. A 10-kΩ resistor value is often used due to these factors.

The SN74HC74 has standard CMOS inputs, so input signal edge rates cannot be slow. Slow input edge rates can cause oscillations and damaging shoot-through current. The recommended rates are defined in the *セクション 6.3*.

Refer to the *セクション 8.3* for additional information regarding the inputs for this device.

9.2.1.3 Output Considerations

The positive supply voltage is used to produce the output HIGH voltage. Drawing current from the output will decrease the output voltage as specified by the V_{OH} specification in the *セクション 6.5*. Similarly, the ground voltage is used to produce the output LOW voltage. Sinking current into the output will increase the output voltage as specified by the V_{OL} specification in the *セクション 6.5*.

Unused outputs can be left floating. Do not connect outputs directly to V_{CC} or ground.

Refer to *セクション 8.3* for additional information regarding the outputs for this device.

9.2.1.4 Timing Considerations

The SN74HC74 is a clocked device. As such, it requires special timing considerations to ensure normal operation.

Primary timing factors to consider:

- Maximum clock frequency: the maximum operating clock frequency defined in *セクション 6.7* is the maximum frequency at which the device is guaranteed to function. This value refers specifically to the triggering waveform, measuring from one trigger level to the next.
- Pulse duration: ensure that the triggering event duration is larger than the minimum pulse duration, as defined in the *セクション 6.7*.
- Setup time: ensure that the data has changed at least one setup time prior to the triggering event, as defined in the *セクション 6.7*.
- Hold time: ensure that the data remains in the desired state at least one hold time after the triggering event, as defined in the *セクション 6.7*.

9.2.2 Detailed Design Procedure

1. Add a decoupling capacitor from V_{CC} to GND. The capacitor needs to be placed physically close to the device and electrically close to both the V_{CC} and GND pins. An example layout is shown in the *セクション 11*.
2. Ensure the capacitive load at the output is ≤ 70 pF. This is not a hard limit, however it will ensure optimal performance. This can be accomplished by providing short, appropriately sized traces from the SN74HC74 to the receiving device.
3. Ensure the resistive load at the output is larger than (V_{CC} / I_O(max)) Ω. This will ensure that the maximum output current from the *セクション 6.1* is not violated. Most CMOS inputs have a resistive load measured in megaohms; much larger than the minimum calculated above.

4. Thermal issues are rarely a concern for logic gates, however the power consumption and thermal increase can be calculated using the steps provided in the application report, CMOS Power Consumption and Cpd Calculation

9.2.3 Application Curves

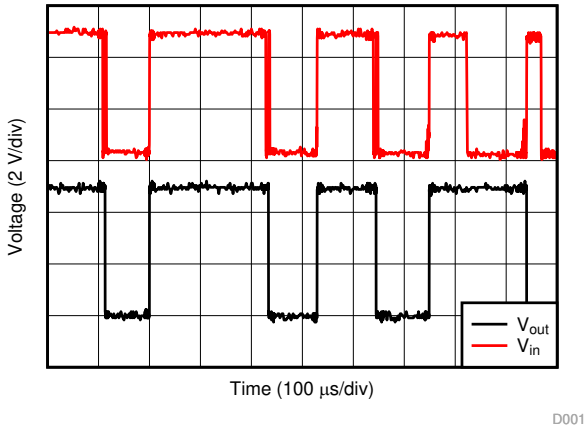

図 9-2. Waveform for non-debounced switch.

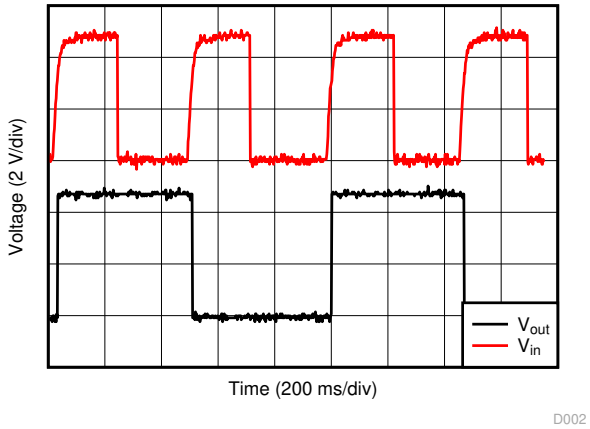

図 9-3. Waveform for debounced switch.

Copyright © 2023 Texas Instruments Incorporated

10 Power Supply Recommendations

The power supply can be any voltage between the minimum and maximum supply voltage rating located in the *セクション 6.3*. Each V_{CC} terminal should have a bypass capacitor to prevent power disturbance. A 0.1-µF capacitor is recommended for this device. It is acceptable to parallel multiple bypass caps to reject different frequencies of noise. The 0.1-µF and 1-µF capacitors are commonly used in parallel. The bypass capacitor should be installed as close to the power terminal as possible for best results, as shown in *図 11-1*.

11 Layout

11.1 Layout Guidelines

When using multiple-input and multiple-channel logic devices inputs must not ever be left floating. In many cases, functions or parts of functions of digital logic devices are unused; for example, when only two inputs of a triple-input AND gate are used. Such unused input pins must not be left unconnected because the undefined voltages at the outside connections result in undefined operational states. All unused inputs of digital logic devices must be connected to a logic high or logic low voltage, as defined by the input voltage specifications, to prevent them from floating. The logic level that must be applied to any particular unused input depends on the function of the device. Generally, the inputs are tied to GND or V_{CC}, whichever makes more sense for the logic function or is more convenient.

11.2 Layout Example

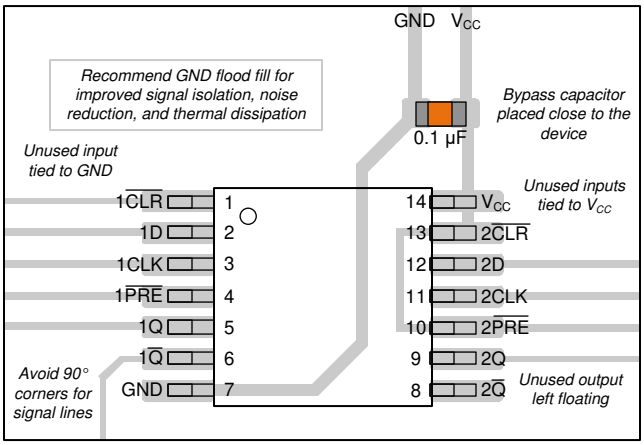

図 11-1. Example layout for the SN74HC74

Copyright © 2023 Texas Instruments Incorporated

12 Device and Documentation Support

12.1 Documentation Support

12.1.1 Related Documentation

For related documentation see the following:

- HCMOS Design Considerations
- CMOS Power Consumption and CPD Calculation
- Designing with Logic

12.2 サポート・リソース

TI E2E™ サポート・フォーラムは、エンジニアが検証済みの回答と設計に関するヒントをエキスパートから迅速かつ直接得ることができる場所です。既存の回答を検索したり、独自の質問をしたりすることで、設計で必要な支援を迅速に得ることができます。

リンクされているコンテンツは、該当する貢献者により、現状のまま提供されるものです。これらは TI の仕様を構成するものではなく、必ずしも TI の見解を反映したものではありません。TI の使用条件を参照してください。

12.3 Trademarks

TI E2E™ is a trademark of Texas Instruments.
すべての商標は、それぞれの所有者に帰属します。

12.4 静電気放電に関する注意事項

この IC は、ESD によって破損する可能性があります。テキサス・インスツルメンツは、IC を取り扱う際には常に適切な注意を払うことを推奨します。正しい ESD 対策をとらないと、デバイスを破損するおそれがあります。

ESD による破損は、わずかな性能低下からデバイスの完全な故障まで多岐にわたります。精密な IC の場合、パラメータがわずかに変化するだけで公表されている仕様から外れる可能性があるため、破損が発生しやすくなっています。

12.5 用語集

TI 用語集　　この用語集には、用語や略語の一覧および定義が記載されています。

13 Mechanical, Packaging, and Orderable Information

The following pages include mechanical, packaging, and orderable information. This information is the most current data available for the designated devices. This data is subject to change without notice and revision of this document. For browser-based versions of this data sheet, refer to the left-hand navigation.

PACKAGING INFORMATION

Orderable part number	Status (1)	Material type (2)	Package | Pins	Package qty | Carrier	RoHS (3)	Lead finish/ Ball material (4)	MSL rating/ Peak reflow (5)	Op temp (°C)	Part marking (6)
5962-8405601VCA	Active	Production	CDIP (J) | 14	25 | TUBE	No	SNPB	N/A for Pkg Type	-55 to 125	5962-8405601VC A SNV54HC74J
5962-8405601VCA.A	Active	Production	CDIP (J) | 14	25 | TUBE	No	SNPB	N/A for Pkg Type	-55 to 125	5962-8405601VC A SNV54HC74J
5962-8405601VDA	Active	Production	CFP (W) | 14	25 | TUBE	No	SNPB	N/A for Pkg Type	-55 to 125	5962-8405601VD A SNV54HC74W
5962-8405601VDA.A	Active	Production	CFP (W) | 14	25 | TUBE	No	SNPB	N/A for Pkg Type	-55 to 125	5962-8405601VD A SNV54HC74W
84056012A	Active	Production	LCCC (FK) | 20	55 | TUBE	No	SNPB	N/A for Pkg Type	-55 to 125	84056012A SNJ54HC 74FK
8405601CA	Active	Production	CDIP (J) | 14	25 | TUBE	No	SNPB	N/A for Pkg Type	-55 to 125	8405601CA SNJ54HC74J
8405601DA	Active	Production	CFP (W) | 14	25 | TUBE	No	SNPB	N/A for Pkg Type	-55 to 125	8405601DA SNJ54HC74W
JM38510/65302B2A	NRND	Production	LCCC (FK) | 20	55 | TUBE	No	SNPB	N/A for Pkg Type	-55 to 125	JM38510/ 65302B2A
JM38510/65302B2A.A	NRND	Production	LCCC (FK) | 20	55 | TUBE	No	SNPB	N/A for Pkg Type	-55 to 125	JM38510/ 65302B2A
JM38510/65302BCA	Active	Production	CDIP (J) | 14	25 | TUBE	No	SNPB	N/A for Pkg Type	-55 to 125	JM38510/ 65302BCA
JM38510/65302BCA.A	Active	Production	CDIP (J) | 14	25 | TUBE	No	SNPB	N/A for Pkg Type	-55 to 125	JM38510/ 65302BCA
JM38510/65302BDA	Active	Production	CFP (W) | 14	25 | TUBE	No	SNPB	N/A for Pkg Type	-55 to 125	JM38510/ 65302BDA
JM38510/65302BDA.A	Active	Production	CFP (W) | 14	25 | TUBE	No	SNPB	N/A for Pkg Type	-55 to 125	JM38510/ 65302BDA
M38510/65302B2A	NRND	Production	LCCC (FK) | 20	55 | TUBE	No	SNPB	N/A for Pkg Type	-55 to 125	JM38510/ 65302B2A

Orderable part number	Status (1)	Material type (2)	Package | Pins	Package qty | Carrier	RoHS (3)	Lead finish/ Ball material (4)	MSL rating/ Peak reflow (5)	Op temp (°C)	Part marking (6)
M38510/65302BCA	Active	Production	CDIP (J) | 14	25 | TUBE	No	SNPB	N/A for Pkg Type	-55 to 125	JM38510/ 65302BCA
M38510/65302BDA	Active	Production	CFP (W) | 14	25 | TUBE	No	SNPB	N/A for Pkg Type	-55 to 125	JM38510/ 65302BDA
SN54HC74J	Active	Production	CDIP (J) | 14	25 | TUBE	No	SNPB	N/A for Pkg Type	-55 to 125	SN54HC74J
SN54HC74J.A	Active	Production	CDIP (J) | 14	25 | TUBE	No	SNPB	N/A for Pkg Type	-55 to 125	SN54HC74J
SN74HC74D	Obsolete	Production	SOIC (D) | 14	-	-	Call TI	Call TI	-40 to 85	HC74
SN74HC74DBR	Active	Production	SSOP (DB) | 14	2000 | LARGE T&R	Yes	NIPDAU	Level-1-260C-UNLIM	-40 to 85	HC74
SN74HC74DBR.A	Active	Production	SSOP (DB) | 14	2000 | LARGE T&R	Yes	NIPDAU	Level-1-260C-UNLIM	-40 to 85	HC74
SN74HC74DBRG4	Active	Production	SSOP (DB) | 14	2000 | LARGE T&R	Yes	NIPDAU	Level-1-260C-UNLIM	-40 to 85	HC74
SN74HC74DR	Active	Production	SOIC (D) | 14	2500 | LARGE T&R	Yes	NIPDAU | SN	Level-1-260C-UNLIM	-40 to 85	HC74
SN74HC74DR.A	Active	Production	SOIC (D) | 14	2500 | LARGE T&R	Yes	NIPDAU	Level-1-260C-UNLIM	-40 to 85	HC74
SN74HC74DRG4	Active	Production	SOIC (D) | 14	2500 | LARGE T&R	Yes	NIPDAU	Level-1-260C-UNLIM	-40 to 85	HC74
SN74HC74DRG4.A	Active	Production	SOIC (D) | 14	2500 | LARGE T&R	Yes	NIPDAU	Level-1-260C-UNLIM	-40 to 85	HC74
SN74HC74DT	Obsolete	Production	SOIC (D) | 14	-	-	Call TI	Call TI	-40 to 85	HC74
SN74HC74N	Active	Production	PDIP (N) | 14	25 | TUBE	Yes	NIPDAU	N/A for Pkg Type	-40 to 85	SN74HC74N
SN74HC74N.A	Active	Production	PDIP (N) | 14	25 | TUBE	Yes	NIPDAU	N/A for Pkg Type	-40 to 85	SN74HC74N
SN74HC74NE4	Active	Production	PDIP (N) | 14	25 | TUBE	Yes	NIPDAU	N/A for Pkg Type	-40 to 85	SN74HC74N
SN74HC74NSR	Active	Production	SOP (NS) | 14	2000 | LARGE T&R	Yes	NIPDAU	Level-1-260C-UNLIM	-40 to 85	HC74
SN74HC74NSR.A	Active	Production	SOP (NS) | 14	2000 | LARGE T&R	Yes	NIPDAU	Level-1-260C-UNLIM	-40 to 85	HC74
SN74HC74NSRG4	Active	Production	SOP (NS) | 14	2000 | LARGE T&R	Yes	NIPDAU	Level-1-260C-UNLIM	-40 to 85	HC74
SN74HC74NSRG4.A	Active	Production	SOP (NS) | 14	2000 | LARGE T&R	Yes	NIPDAU	Level-1-260C-UNLIM	-40 to 85	HC74
SN74HC74PW	Obsolete	Production	TSSOP (PW) | 14	-	-	Call TI	Call TI	-40 to 85	HC74
SN74HC74PWR	Active	Production	TSSOP (PW) | 14	2000 | LARGE T&R	Yes	NIPDAU | SN	Level-1-260C-UNLIM	-40 to 85	HC74
SN74HC74PWR.A	Active	Production	TSSOP (PW) | 14	2000 | LARGE T&R	Yes	NIPDAU	Level-1-260C-UNLIM	-40 to 85	HC74
SN74HC74PWR1G4	Active	Production	TSSOP (PW) | 14	2000 | LARGE T&R	Yes	NIPDAU	Level-1-260C-UNLIM	-40 to 85	HC74
SN74HC74PWR1G4.A	Active	Production	TSSOP (PW) | 14	2000 | LARGE T&R	Yes	NIPDAU	Level-1-260C-UNLIM	-40 to 85	HC74
SN74HC74PWT	Obsolete	Production	TSSOP (PW) | 14	-	-	Call TI	Call TI	-40 to 85	HC74
SNJ54HC74FK	Active	Production	LCCC (FK) | 20	55 | TUBE	No	SNPB	N/A for Pkg Type	-55 to 125	84056012A SNJ54HC 74FK

Orderable part number	Status (1)	Material type (2)	Package | Pins	Package qty | Carrier	RoHS (3)	Lead finish/ Ball material (4)	MSL rating/ Peak reflow (5)	Op temp (°C)	Part marking (6)
SNJ54HC74FK.A	Active	Production	LCCC (FK) | 20	55 | TUBE	No	SNPB	N/A for Pkg Type	-55 to 125	84056012A SNJ54HC 74FK
SNJ54HC74J	Active	Production	CDIP (J) | 14	25 | TUBE	No	SNPB	N/A for Pkg Type	-55 to 125	8405601CA SNJ54HC74J
SNJ54HC74J.A	Active	Production	CDIP (J) | 14	25 | TUBE	No	SNPB	N/A for Pkg Type	-55 to 125	8405601CA SNJ54HC74J
SNJ54HC74W	Active	Production	CFP (W) | 14	25 | TUBE	No	SNPB	N/A for Pkg Type	-55 to 125	8405601DA SNJ54HC74W
SNJ54HC74W.A	Active	Production	CFP (W) | 14	25 | TUBE	No	SNPB	N/A for Pkg Type	-55 to 125	8405601DA SNJ54HC74W

(1) **Status:** For more details on status, see our product life cycle.

(2) **Material type:** When designated, preproduction parts are prototypes/experimental devices, and are not yet approved or released for full production. Testing and final process, including without limitation quality assurance, reliability performance testing, and/or process qualification, may not yet be complete, and this item is subject to further changes or possible discontinuation. If available for ordering, purchases will be subject to an additional waiver at checkout, and are intended for early internal evaluation purposes only. These items are sold without warranties of any kind.

(3) **RoHS values:** Yes, No, RoHS Exempt. See the TI RoHS Statement for additional information and value definition.

(4) **Lead finish/Ball material:** Parts may have multiple material finish options. Finish options are separated by a vertical ruled line. Lead finish/Ball material values may wrap to two lines if the finish value exceeds the maximum column width.

(5) **MSL rating/Peak reflow:** The moisture sensitivity level ratings and peak solder (reflow) temperatures. In the event that a part has multiple moisture sensitivity ratings, only the lowest level per JEDEC standards is shown. Refer to the shipping label for the actual reflow temperature that will be used to mount the part to the printed circuit board.

(6) **Part marking:** There may be an additional marking, which relates to the logo, the lot trace code information, or the environmental category of the part.

Multiple part markings will be inside parentheses. Only one part marking contained in parentheses and separated by a "~" will appear on a part. If a line is indented then it is a continuation of the previous line and the two combined represent the entire part marking for that device.

Important Information and Disclaimer: The information provided on this page represents TI's knowledge and belief as of the date that it is provided. TI bases its knowledge and belief on information provided by third parties, and makes no representation or warranty as to the accuracy of such information. Efforts are underway to better integrate information from third parties. TI has taken and continues to take reasonable steps to provide representative and accurate information but may not have conducted destructive testing or chemical analysis on incoming materials and chemicals. TI and TI suppliers consider certain information to be proprietary, and thus CAS numbers and other limited information may not be available for release.

In no event shall TI's liability arising out of such information exceed the total purchase price of the TI part(s) at issue in this document sold by TI to Customer on an annual basis.

OTHER QUALIFIED VERSIONS OF SN54HC74, SN54HC74-SP, SN74HC74 :

- Catalog : SN74HC74, SN54HC74
- Automotive : SN74HC74-Q1, SN74HC74-Q1
- Enhanced Product : SN74HC74-EP, SN74HC74-EP
- Military : SN54HC74
- Space : SN54HC74-SP

NOTE: Qualified Version Definitions:

- Catalog - TI's standard catalog product
- Automotive - Q100 devices qualified for high-reliability automotive applications targeting zero defects
- Enhanced Product - Supports Defense, Aerospace and Medical Applications
- Military - QML certified for Military and Defense Applications
- Space - Radiation tolerant, ceramic packaging and qualified for use in Space-based application

TAPE AND REEL INFORMATION

REEL DIMENSIONS

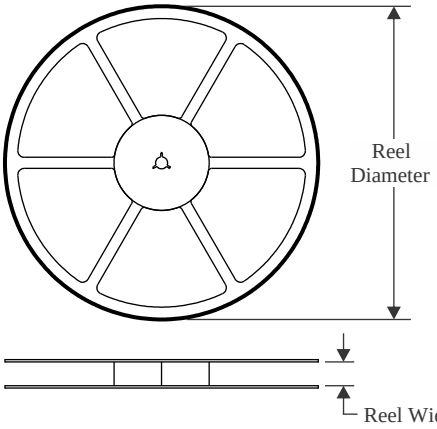

TAPE DIMENSIONS

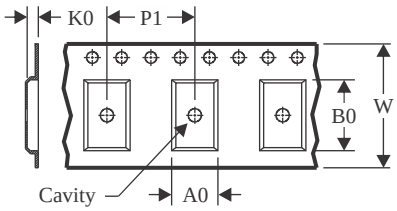

A0	Dimension designed to accommodate the component width
B0	Dimension designed to accommodate the component length
K0	Dimension designed to accommodate the component thickness
W	Overall width of the carrier tape
P1	Pitch between successive cavity centers

QUADRANT ASSIGNMENTS FOR PIN 1 ORIENTATION IN TAPE

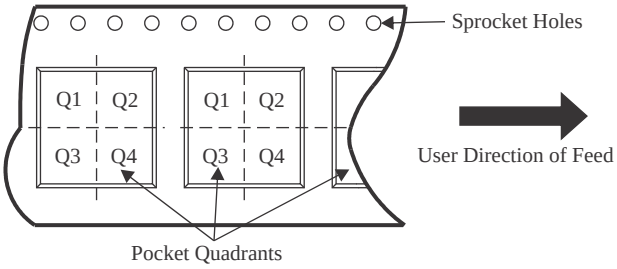

*All dimensions are nominal

Device	Package Type	Package Drawing	Pins	SPQ	Reel Diameter (mm)	Reel Width W1 (mm)	A0 (mm)	B0 (mm)	K0 (mm)	P1 (mm)	W (mm)	Pin1 Quadrant
SN74HC74DBR	SSOP	DB	14	2000	330.0	16.4	8.35	6.6	2.4	12.0	16.0	Q1
SN74HC74DR	SOIC	D	14	2500	330.0	16.4	6.5	9.0	2.1	8.0	16.0	Q1
SN74HC74DR	SOIC	D	14	2500	330.0	16.4	6.5	9.0	2.1	8.0	16.0	Q1
SN74HC74DRG4	SOIC	D	14	2500	330.0	16.4	6.5	9.0	2.1	8.0	16.0	Q1
SN74HC74NSR	SOP	NS	14	2000	330.0	16.4	8.45	10.55	2.5	12.0	16.2	Q1
SN74HC74NSRG4	SOP	NS	14	2000	330.0	16.4	8.45	10.55	2.5	12.0	16.2	Q1
SN74HC74PWR	TSSOP	PW	14	2000	330.0	12.4	6.9	5.6	1.6	8.0	12.0	Q1
SN74HC74PWR	TSSOP	PW	14	2000	330.0	12.4	6.9	5.6	1.6	8.0	12.0	Q1
SN74HC74PWR1G4	TSSOP	PW	14	2000	330.0	12.4	6.9	5.6	1.6	8.0	12.0	Q1

TAPE AND REEL BOX DIMENSIONS

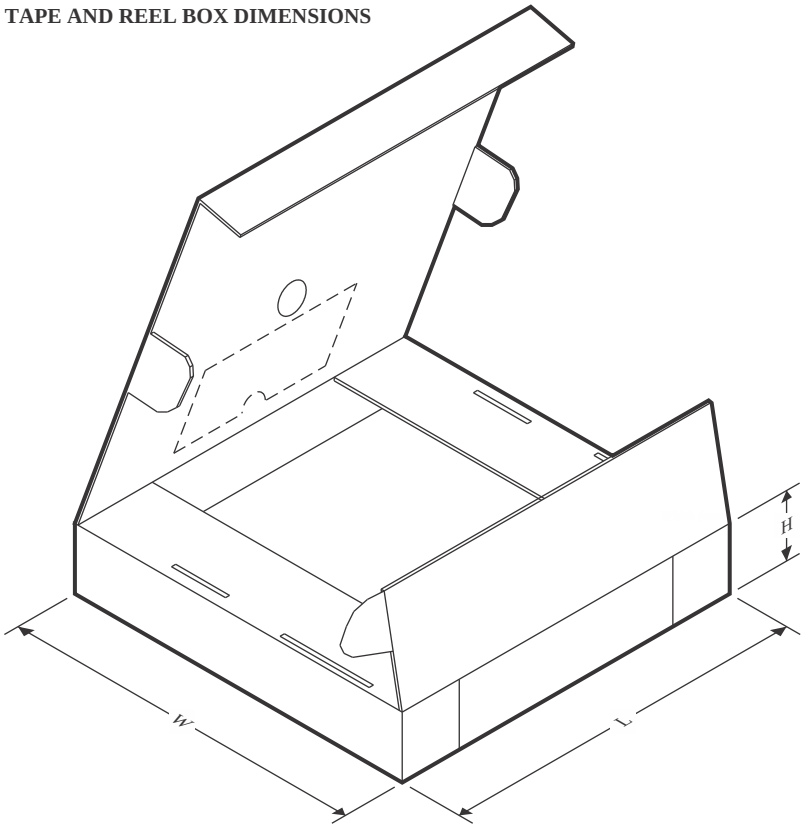

*All dimensions are nominal

Device	Package Type	Package Drawing	Pins	SPQ	Length (mm)	Width (mm)	Height (mm)
SN74HC74DBR	SSOP	DB	14	2000	353.0	353.0	32.0
SN74HC74DR	SOIC	D	14	2500	340.5	336.1	32.0
SN74HC74DR	SOIC	D	14	2500	340.5	336.1	32.0
SN74HC74DRG4	SOIC	D	14	2500	340.5	336.1	32.0
SN74HC74NSR	SOP	NS	14	2000	353.0	353.0	32.0
SN74HC74NSRG4	SOP	NS	14	2000	353.0	353.0	32.0
SN74HC74PWR	TSSOP	PW	14	2000	356.0	356.0	35.0
SN74HC74PWR	TSSOP	PW	14	2000	353.0	353.0	32.0
SN74HC74PWR1G4	TSSOP	PW	14	2000	353.0	353.0	32.0

TUBE

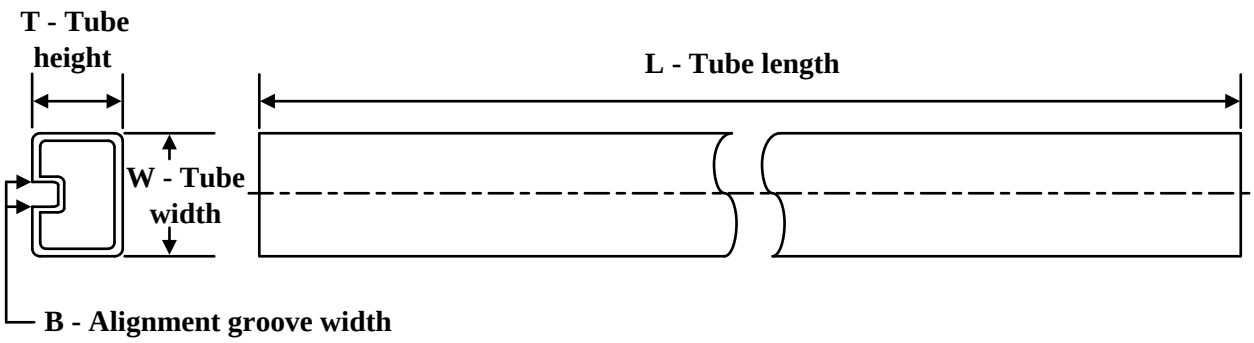

*All dimensions are nominal

Device	Package Name	Package Type	Pins	SPQ	L (mm)	W (mm)	T (µm)	B (mm)
5962-8405601VDA	W	CFP	14	25	506.98	26.16	6220	NA
5962-8405601VDA.A	W	CFP	14	25	506.98	26.16	6220	NA
84056012A	FK	LCCC	20	55	506.98	12.06	2030	NA
8405601DA	W	CFP	14	25	506.98	26.16	6220	NA
JM38510/65302B2A	FK	LCCC	20	55	506.98	12.06	2030	NA
JM38510/65302B2A.A	FK	LCCC	20	55	506.98	12.06	2030	NA
JM38510/65302BDA	W	CFP	14	25	506.98	26.16	6220	NA
JM38510/65302BDA.A	W	CFP	14	25	506.98	26.16	6220	NA
M38510/65302B2A	FK	LCCC	20	55	506.98	12.06	2030	NA
M38510/65302BDA	W	CFP	14	25	506.98	26.16	6220	NA
SN74HC74N	N	PDIP	14	25	506	13.97	11230	4.32
SN74HC74N	N	PDIP	14	25	506	13.97	11230	4.32
SN74HC74N.A	N	PDIP	14	25	506	13.97	11230	4.32
SN74HC74N.A	N	PDIP	14	25	506	13.97	11230	4.32
SN74HC74NE4	N	PDIP	14	25	506	13.97	11230	4.32
SN74HC74NE4	N	PDIP	14	25	506	13.97	11230	4.32
SNJ54HC74FK	FK	LCCC	20	55	506.98	12.06	2030	NA
SNJ54HC74FK.A	FK	LCCC	20	55	506.98	12.06	2030	NA
SNJ54HC74W	W	CFP	14	25	506.98	26.16	6220	NA
SNJ54HC74W.A	W	CFP	14	25	506.98	26.16	6220	NA

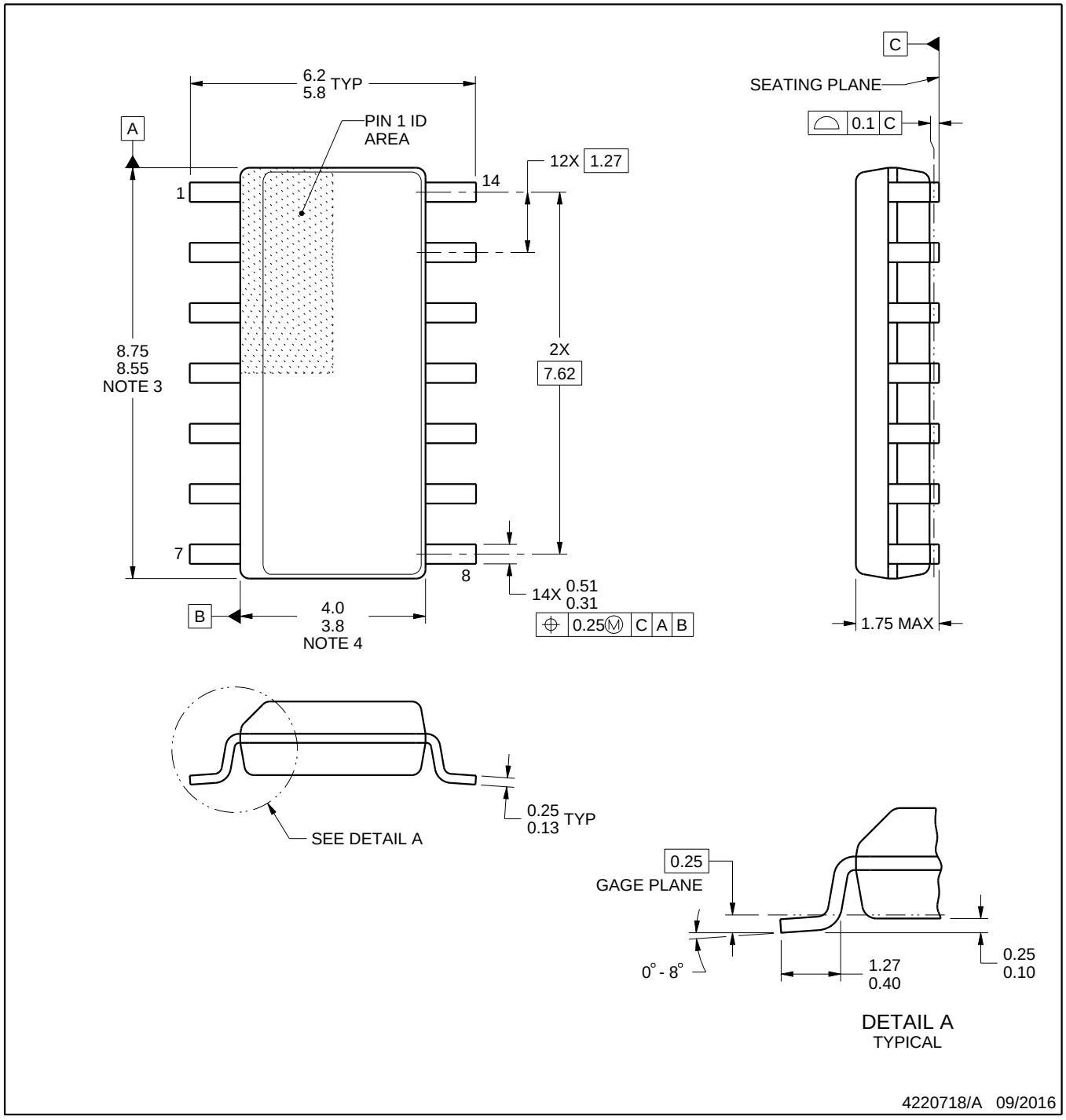

NOTES:

1. All linear dimensions are in millimeters. Dimensions in parenthesis are for reference only. Dimensioning and tolerancing per ASME Y14.5M.
2. This drawing is subject to change without notice.
3. This dimension does not include mold flash, protrusions, or gate burrs. Mold flash, protrusions, or gate burrs shall not exceed 0.15 mm, per side.
4. This dimension does not include interlead flash. Interlead flash shall not exceed 0.43 mm, per side.
5. Reference JEDEC registration MS-012, variation AB.

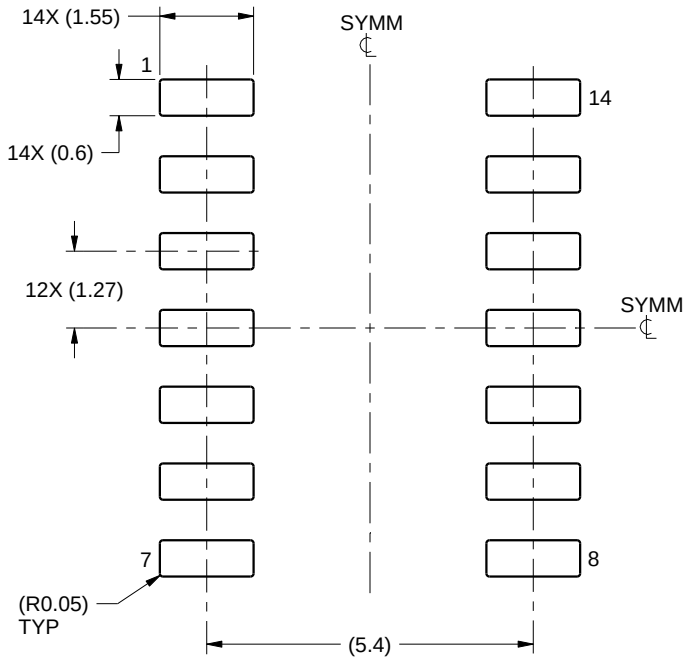

LAND PATTERN EXAMPLE
SCALE:8X

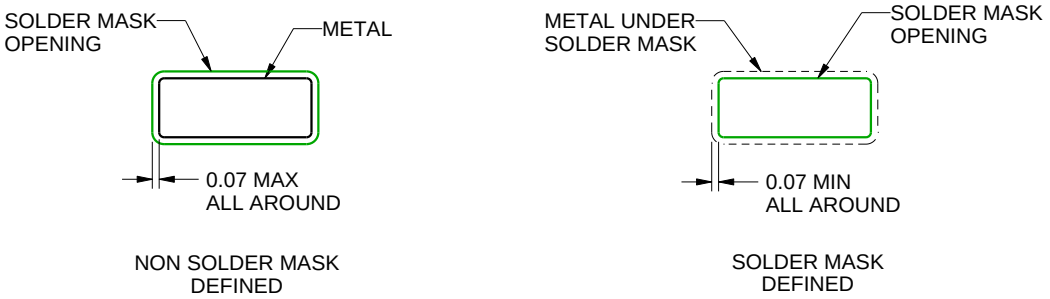

SOLDER MASK DETAILS

4220718/A 09/2016

NOTES: (continued)

6. Publication IPC-7351 may have alternate designs.
7. Solder mask tolerances between and around signal pads can vary based on board fabrication site.

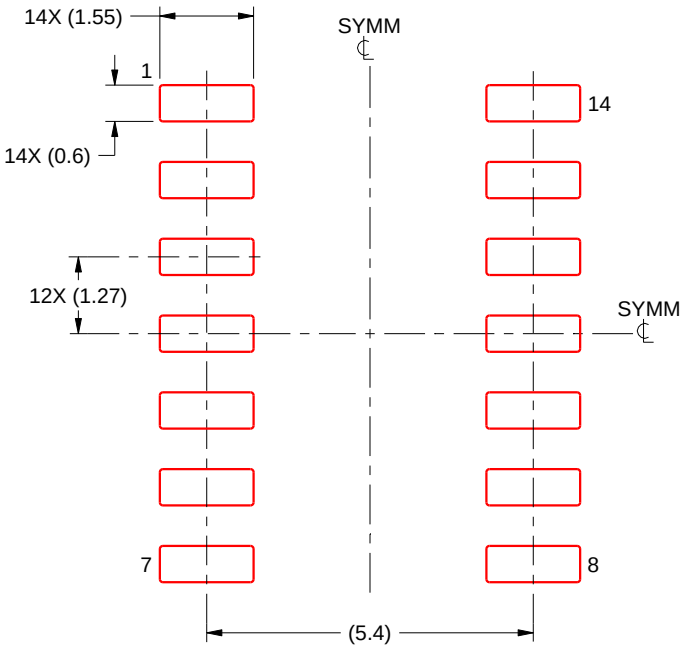

SOLDER PASTE EXAMPLE
BASED ON 0.125 mm THICK STENCIL
SCALE:8X

4220718/A 09/2016

NOTES: (continued)

8. Laser cutting apertures with trapezoidal walls and rounded corners may offer better paste release. IPC-7525 may have alternate design recommendations.
9. Board assembly site may have different recommendations for stencil design.

MECHANICAL DATA

NS (R-PDSO-G)** **PLASTIC SMALL-OUTLINE PACKAGE**

14-PINS SHOWN

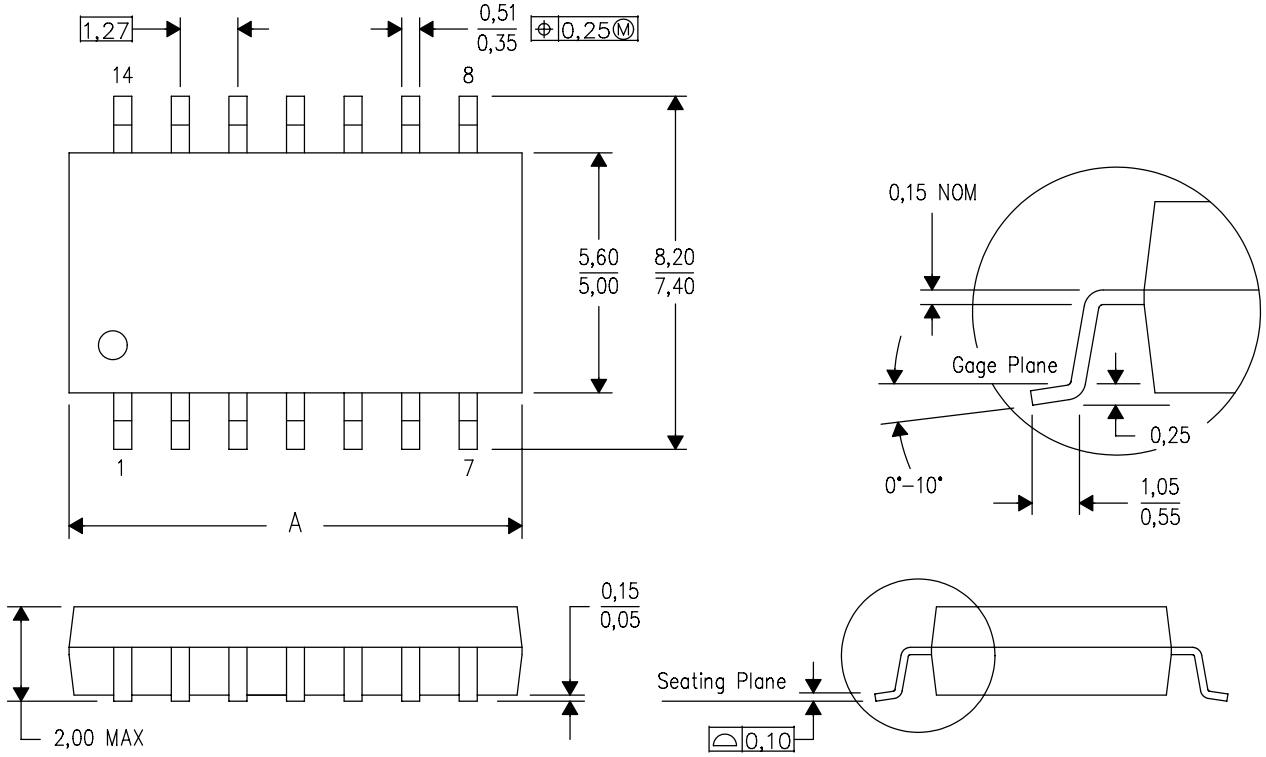

DIM \ PINS **	14	16	20	24
A MAX	10,50	10,50	12,90	15,30
A MIN	9,90	9,90	12,30	14,70

4040062/C 03/03

NOTES:
A. All linear dimensions are in millimeters.
B. This drawing is subject to change without notice.
C. Body dimensions do not include mold flash or protrusion, not to exceed 0,15.

W (R–GDFP–F14) CERAMIC DUAL FLATPACK

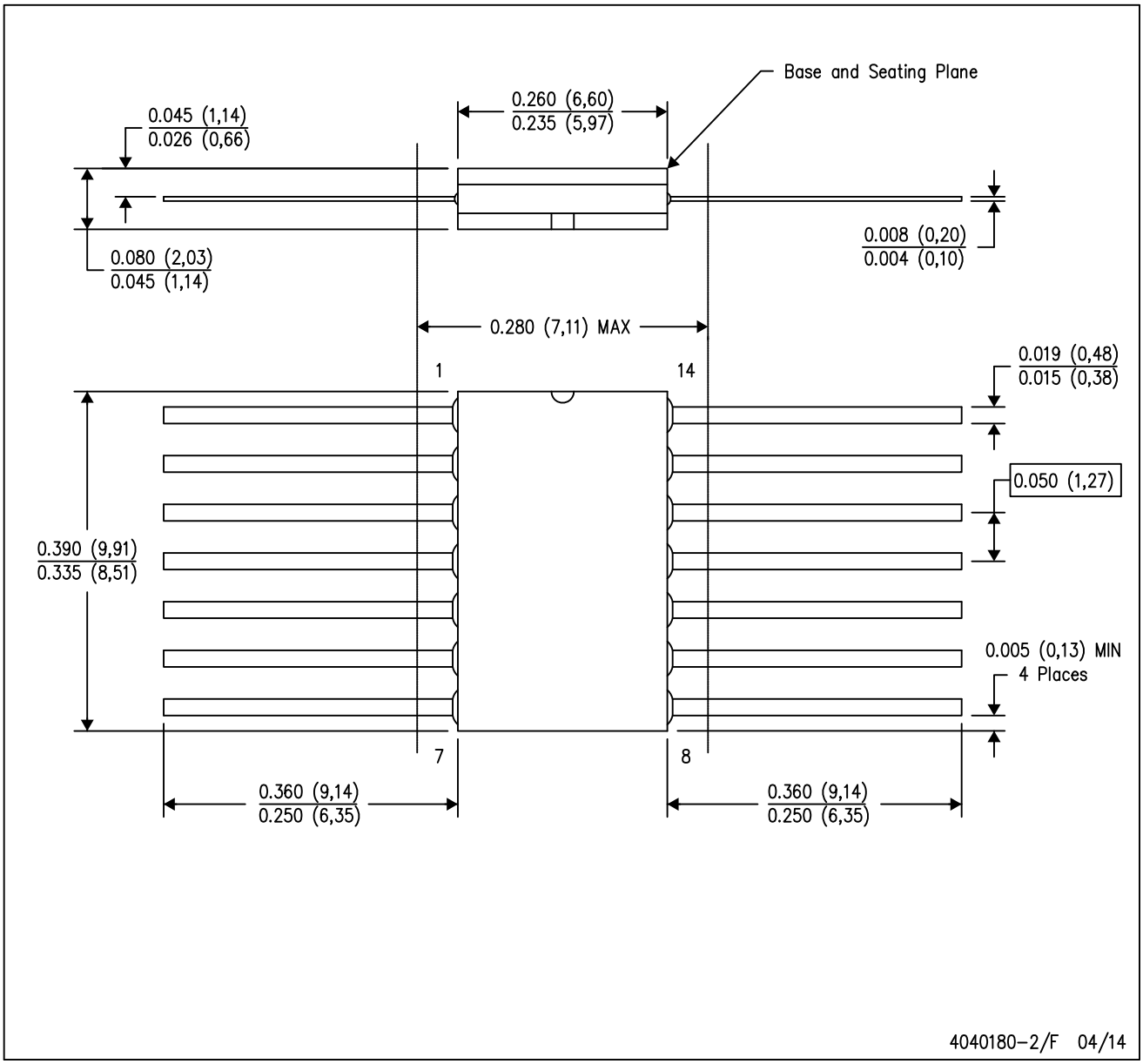

NOTES:
A. All linear dimensions are in inches (millimeters).
B. This drawing is subject to change without notice.
C. This package can be hermetically sealed with a ceramic lid using glass frit.
D. Index point is provided on cap for terminal identification only.
E. Falls within MIL STD 1835 GDFP1–F14

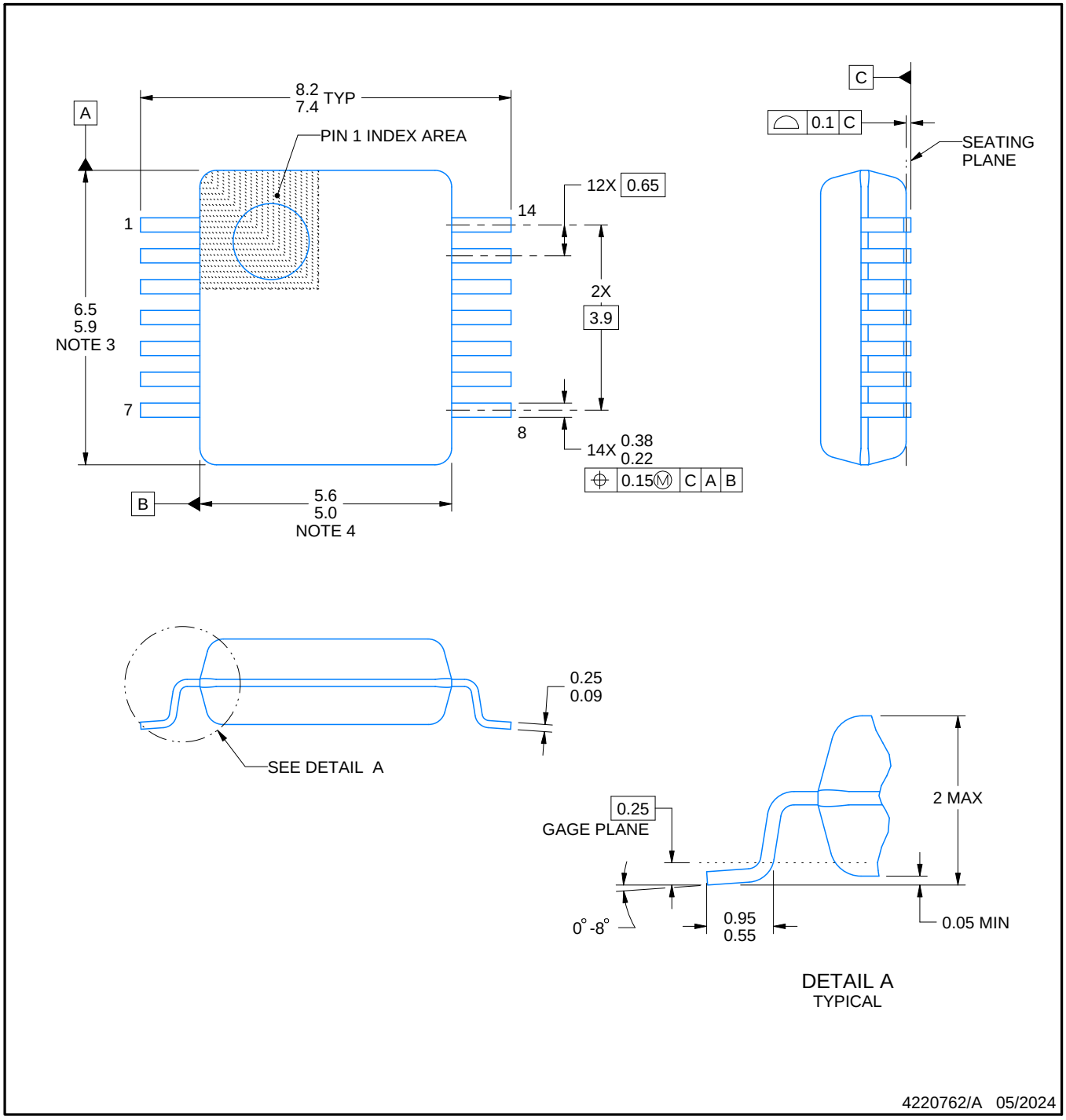

NOTES:

1. All linear dimensions are in millimeters. Any dimensions in parenthesis are for reference only. Dimensioning and tolerancing per ASME Y14.5M.
2. This drawing is subject to change without notice.
3. This dimension does not include mold flash, protrusions, or gate burrs. Mold flash, protrusions, or gate burrs shall not exceed 0.15 mm per side.
4. Reference JEDEC registration MO-150.

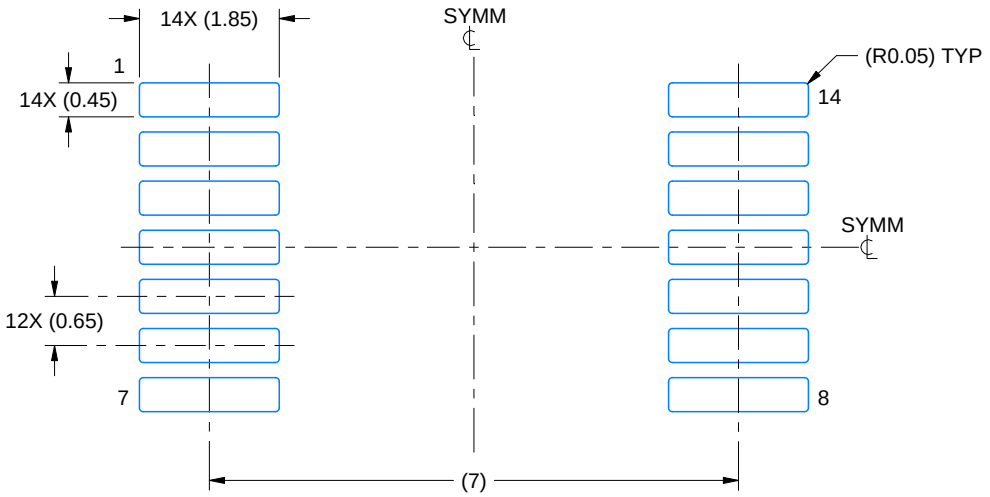

LAND PATTERN EXAMPLE
EXPOSED METAL SHOWN
SCALE: 10X

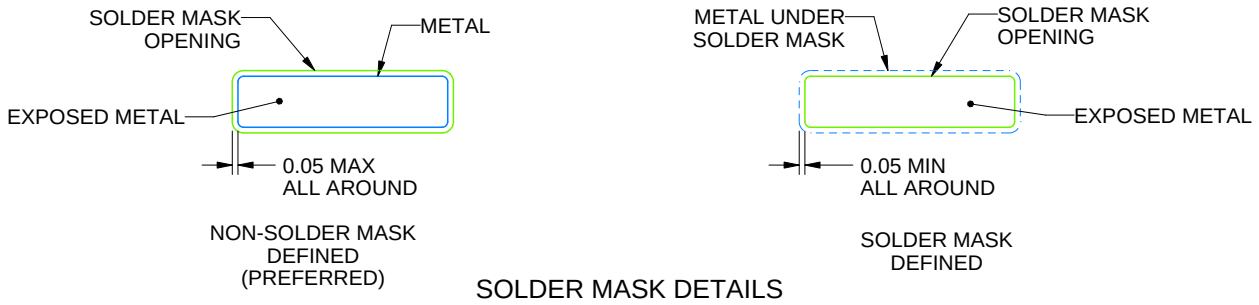

SOLDER MASK DETAILS

4220762/A 05/2024

NOTES: (continued)

5. Publication IPC-7351 may have alternate designs.
6. Solder mask tolerances between and around signal pads can vary based on board fabrication site.

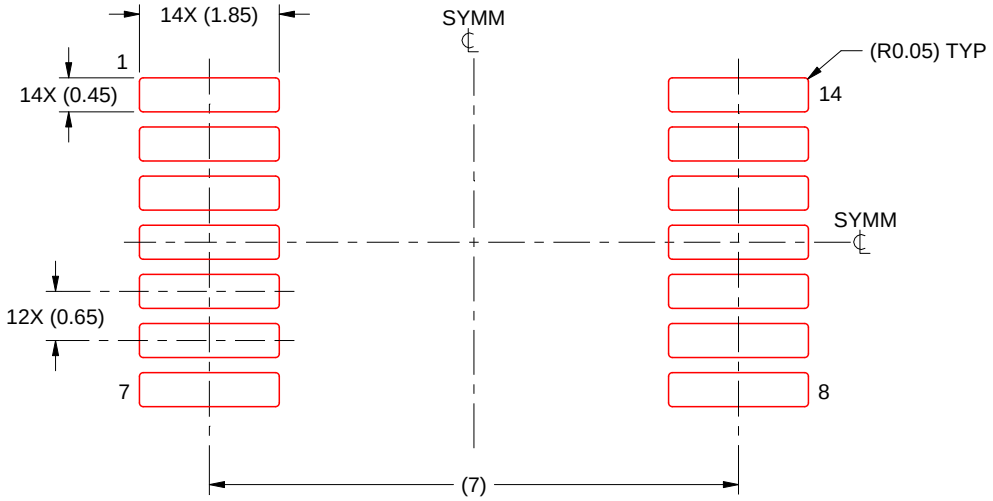

SOLDER PASTE EXAMPLE
BASED ON 0.125 mm THICK STENCIL
SCALE: 10X

4220762/A 05/2024

NOTES: (continued)

7. Laser cutting apertures with trapezoidal walls and rounded corners may offer better paste release. IPC-7525 may have alternate design recommendations.
8. Board assembly site may have different recommendations for stencil design.

GENERIC PACKAGE VIEW

FK 20

LCCC - 2.03 mm max height

8.89 x 8.89, 1.27 mm pitch

LEADLESS CERAMIC CHIP CARRIER

This image is a representation of the package family, actual package may vary.
Refer to the product data sheet for package details.

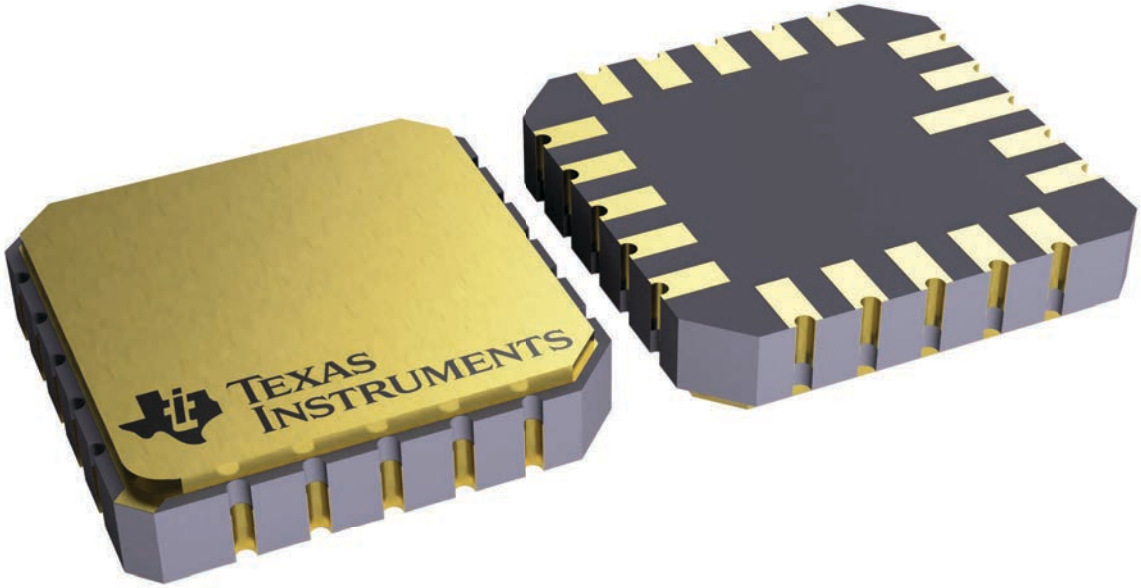

4229370VA\

J 14 CDIP - 5.08 mm max height

CERAMIC DUAL IN LINE PACKAGE

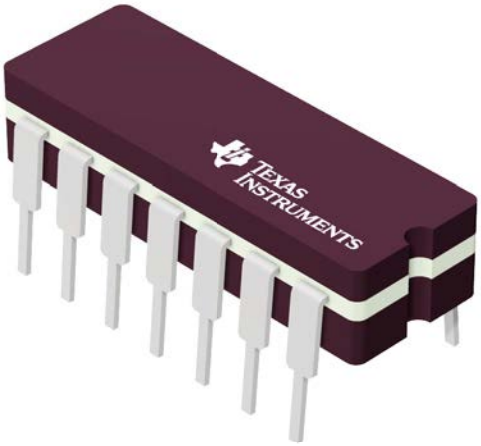

Images above are just a representation of the package family, actual package may vary.
Refer to the product data sheet for package details.

4040083-5/G

PACKAGE OUTLINE

J0014A

CDIP - 5.08 mm max height

CERAMIC DUAL IN LINE PACKAGE

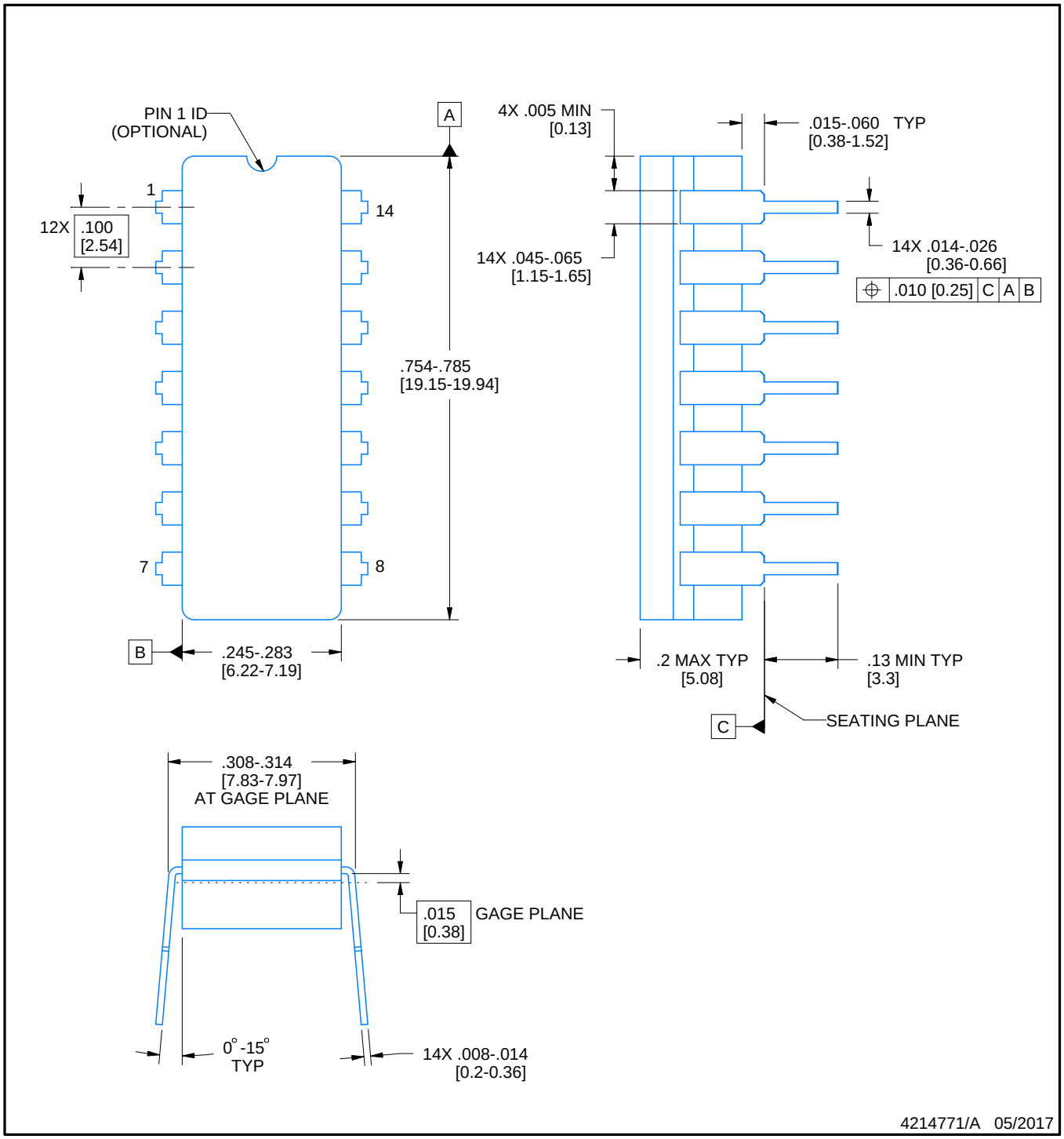

NOTES:

1. All controlling linear dimensions are in inches. Dimensions in brackets are in millimeters. Any dimension in brackets or parenthesis are for reference only. Dimensioning and tolerancing per ASME Y14.5M.
2. This drawing is subject to change without notice.
3. This package is hermitically sealed with a ceramic lid using glass frit.
4. Index point is provided on cap for terminal identification only and on press ceramic glass frit seal only.
5. Falls within MIL-STD-1835 and GDIP1-T14.

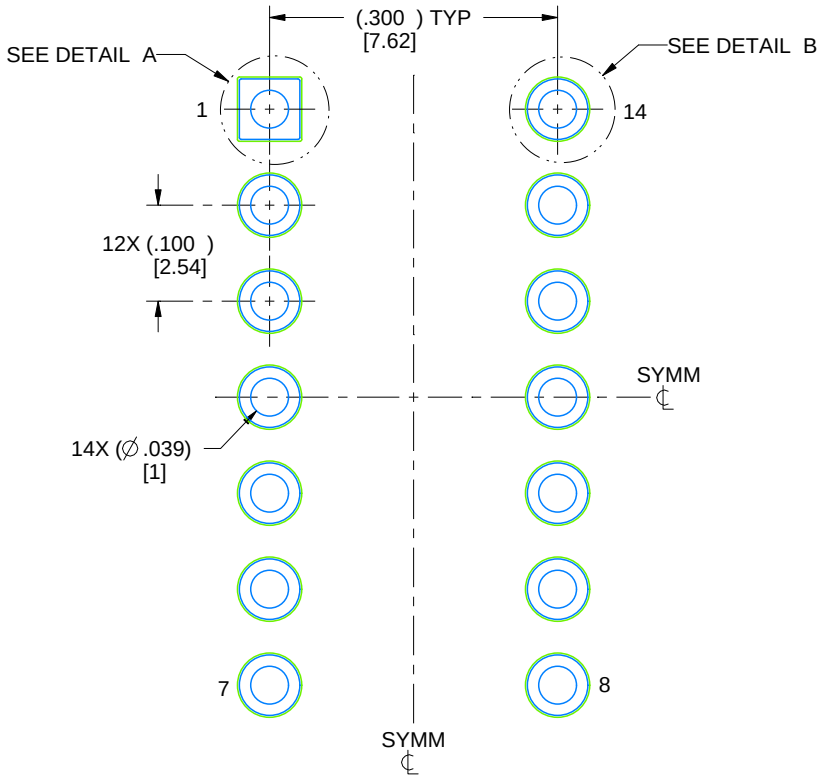

LAND PATTERN EXAMPLE
NON-SOLDER MASK DEFINED
SCALE: 5X

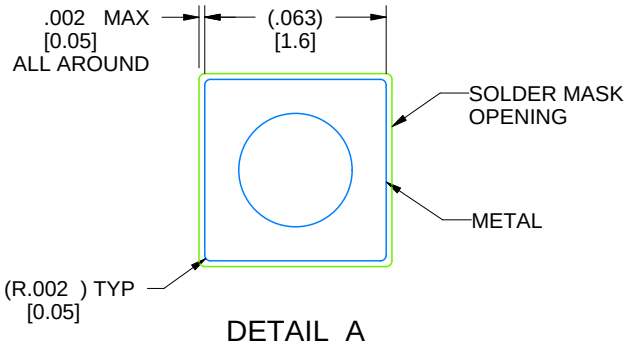

DETAIL A
SCALE: 15X

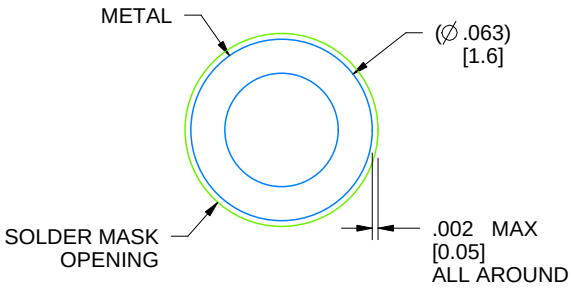

DETAIL B
13X, SCALE: 15X

4214771/A 05/2017

N (R–PDIP–T**) PLASTIC DUAL–IN–LINE PACKAGE

16 PINS SHOWN

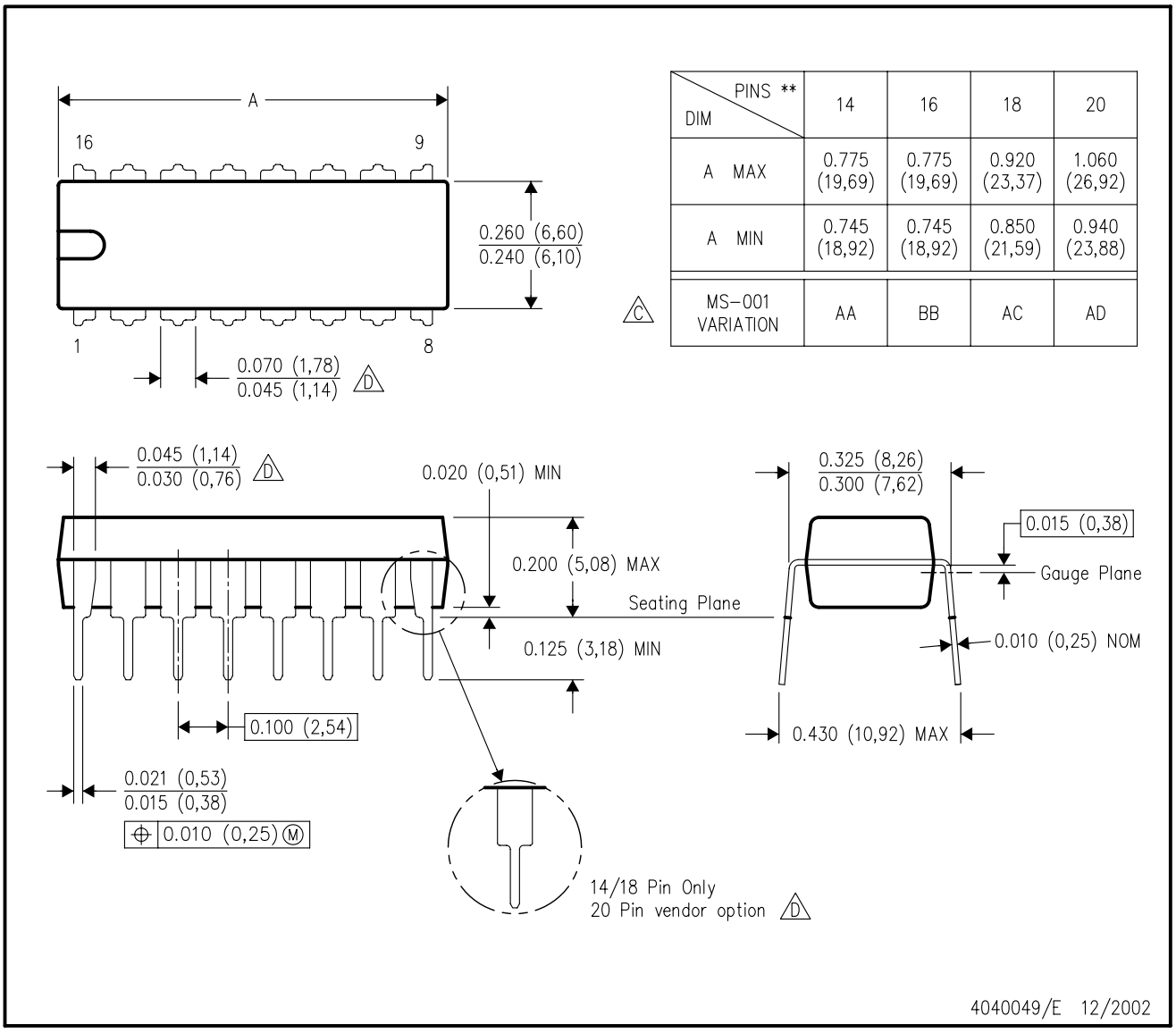

DIM \ PINS **	14	16	18	20
A MAX	0.775 (19,69)	0.775 (19,69)	0.920 (23,37)	1.060 (26,92)
A MIN	0.745 (18,92)	0.745 (18,92)	0.850 (21,59)	0.940 (23,88)
MS–001 VARIATION (C)	AA	BB	AC	AD

NOTES:
A. All linear dimensions are in inches (millimeters).
B. This drawing is subject to change without notice.
C. Falls within JEDEC MS–001, except 18 and 20 pin minimum body length (Dim A).
D. The 20 pin end lead shoulder width is a vendor option, either half or full width.

PW0014A

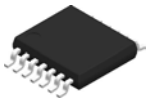

PACKAGE OUTLINE

TSSOP - 1.2 mm max height

SMALL OUTLINE PACKAGE

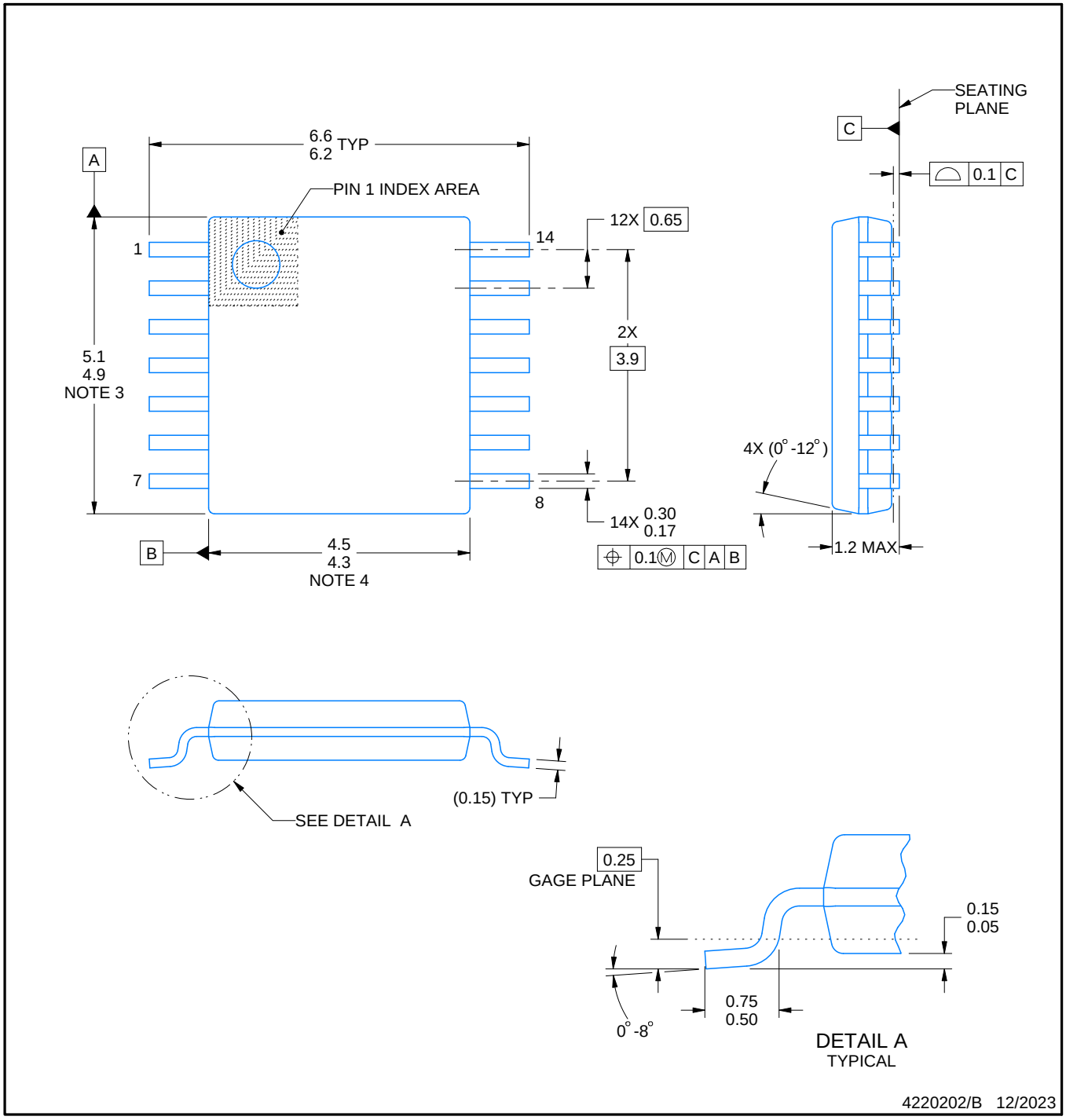

NOTES:

1. All linear dimensions are in millimeters. Any dimensions in parenthesis are for reference only. Dimensioning and tolerancing per ASME Y14.5M.
2. This drawing is subject to change without notice.
3. This dimension does not include mold flash, protrusions, or gate burrs. Mold flash, protrusions, or gate burrs shall not exceed 0.15 mm per side.
4. This dimension does not include interlead flash. Interlead flash shall not exceed 0.25 mm per side.
5. Reference JEDEC registration MO-153.

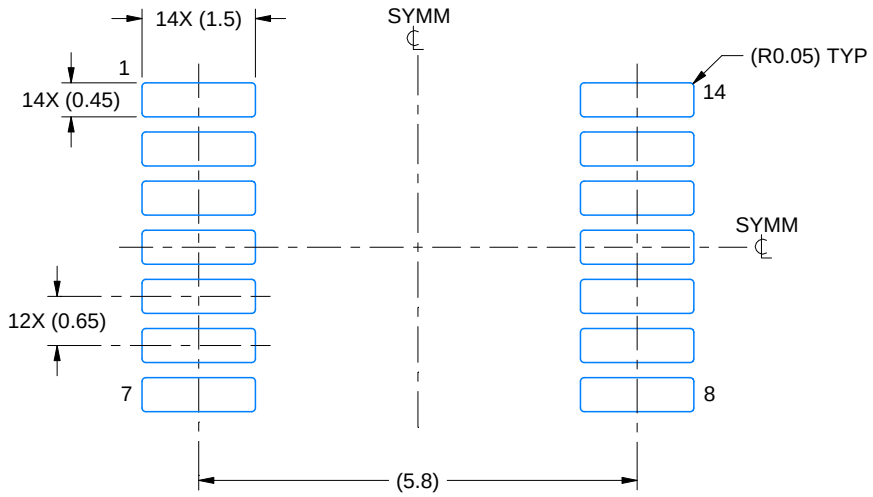

LAND PATTERN EXAMPLE
EXPOSED METAL SHOWN
SCALE: 10X

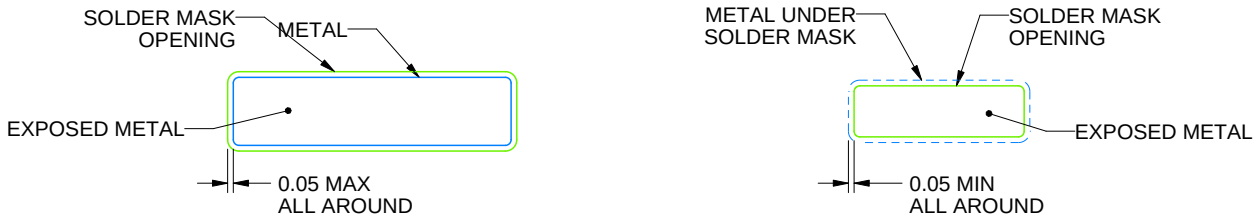

NON-SOLDER MASK DEFINED (PREFERRED)

SOLDER MASK DEFINED

SOLDER MASK DETAILS

4220202/B 12/2023

NOTES: (continued)

6. Publication IPC-7351 may have alternate designs.
7. Solder mask tolerances between and around signal pads can vary based on board fabrication site.

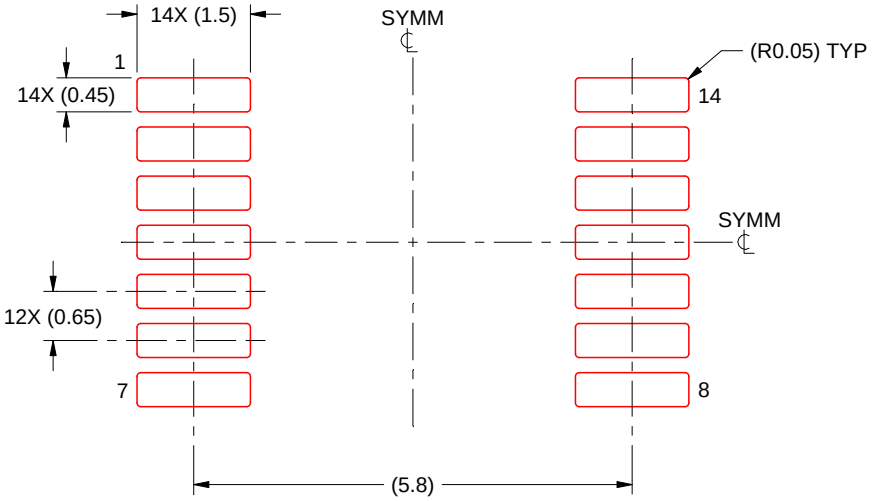

SOLDER PASTE EXAMPLE
BASED ON 0.125 mm THICK STENCIL
SCALE: 10X

4220202/B 12/2023

NOTES: (continued)

8. Laser cutting apertures with trapezoidal walls and rounded corners may offer better paste release. IPC-7525 may have alternate design recommendations.
9. Board assembly site may have different recommendations for stencil design.

重要なお知らせと免責事項

TI は、技術データと信頼性データ (データシートを含みます)、設計リソース (リファレンス デザインを含みます)、アプリケーションや設計に関する各種アドバイス、Web ツール、安全性情報、その他のリソースを、欠陥が存在する可能性のある「現状のまま」提供しており、商品性および特定目的に対する適合性の黙示保証、第三者の知的財産権の非侵害保証を含むいかなる保証も、明示的または黙示的にかかわらず拒否します。

これらのリソースは、TI 製品を使用する設計の経験を積んだ開発者への提供を意図したものです。(1) お客様のアプリケーションに適した TI 製品の選定、(2) お客様のアプリケーションの設計、検証、試験、(3) お客様のアプリケーションに該当する各種規格や、その他のあらゆる安全性、セキュリティ、規制、または他の要件への確実な適合に関する責任を、お客様のみが単独で負うものとします。

上記の各種リソースは、予告なく変更される可能性があります。これらのリソースは、リソースで説明されている TI 製品を使用するアプリケーションの開発の目的でのみ、TI はその使用をお客様に許諾します。これらのリソースに関して、他の目的で複製することや掲載することは禁止されています。TI や第三者の知的財産権のライセンスが付与されている訳ではありません。お客様は、これらのリソースを自身で使用した結果発生するあらゆる申し立て、損害、費用、損失、責任について、TI およびその代理人を完全に補償するものとし、TI は一切の責任を拒否します。

TI の製品は、 TI の販売条件 、 TI の総合的な品質ガイドライン 、 ti.com または TI 製品などに関連して提供される他の適用条件に従い提供されます。TI がこれらのリソースを提供することは、適用される TI の保証または他の保証の放棄の拡大や変更を意味するものではありません。 TI がカスタム、またはカスタマー仕様として明示的に指定していない限り、TI の製品は標準的なカタログに掲載される汎用機器です。

お客様がいかなる追加条項または代替条項を提案する場合も、TI はそれらに異議を唱え、拒否します。

Copyright © 2026, Texas Instruments Incorporated

最終更新日：2025 年 10 月