SN54SC4T32-SEP レベル変換内蔵、耐放射線、クワッド、2 入力、正論理 OR ゲート

1 特長

- VID (Vendor Item Drawing) V62/23629-01XE が利用可能
- 吸収線量 (TID) 耐性 = 30krad(Si)
  - すべてのウェハー ロットについての 30krad(Si) までの吸収線量耐性放射線ロット受け入れテスト (TID RLAT)
- シングル・イベント効果 (SEE) 特性:
  - シングル・イベント・ラッチアップ (SEL) 耐性:線エネルギー付与 (LET) = 43MeV-cm2/mg
  - シングル・イベント過渡 (SET) 特性:43MeV-cm2/mg
- 広い動作範囲:1.2V～5.5V
- 5/3.3/2.5/1.8/1.2V V_{CC} の単電源変換ゲート
  - TTL 互換入力:
    - 昇圧変換:
      - 1.8V – 1.2V からの入力
      - 2.5V – 1.8V からの入力
      - 3.3V – 1.8V、2.5V からの入力
      - 5.0V – 2.5V、3.3V からの入力
    - 降圧変換:
      - 1.2V – 1.8V、2.5V、3.3V、5.0V からの入力
      - 1.8V – 2.5V、3.3V、5.0V からの入力
      - 2.5V – 3.3V、5.0V からの入力
      - 3.3V – 5.0V からの入力
- 5.5V 耐圧入力ピン
- 5V で最大 25mA の出力駆動能力
- JESD 17 準拠で 250mA 超のラッチアップ性能
- 宇宙向け強化プラスチック (SEP)
  - 管理されたベースライン
  - 金ボンド・ワイヤ
  - NiPdAu リード仕上げ
  - 単一のアセンブリ / テスト施設
  - 単一の製造施設
  - 軍用温度範囲:-55℃～125℃
  - 長い製品ライフ・サイクル
  - 製品のトレーサビリティ
  - NASA ASTM E595 アウトガス仕様に適合

2 アプリケーション

- デジタル信号のイネーブルまたはディスエーブル
- インジケータ LED の制御
- 通信モジュールとシステム・コントローラの間のレベル変換

3 概要

SN54SC4T32-SEP には、シュミット トリガ入力の 4 つの独立した 2 入力 OR ゲートが内蔵されており、拡張電圧動作によりレベル変換が可能です。各ゲートはブール関数 Y = A + B を正論理で実行します。出力レベルは電源電圧 (V_{CC}) を基準としており、1.8V、2.5V、3.3V、5V の CMOS レベルをサポートしています。

入力は、低電圧 CMOS 入力の昇圧変換 (例:1.2V 入力から 1.8V 出力、または 1.8V 入力から 3.3V 出力) をサポートするため、低スレッショルド回路を使って設計されています。また、5V 許容の入力ピンにより、降圧変換 (例:3.3V～2.5V 出力) が可能です。

パッケージ情報

部品番号	パッケージ (1)	パッケージ サイズ (2)	本体サイズ (公称)(3)
SN54SC4T32-SEP	PW (TSSOP、14)	5.00mm × 6.40mm	5.00mm × 4.40mm

(1) 詳細については、セクション 11 を参照してください。
(2) パッケージ・サイズ (長さ×幅) は公称値であり、該当する場合はピンも含まれます
(3) 本体サイズ (長さ×幅) は公称値であり、ピンは含まれません。

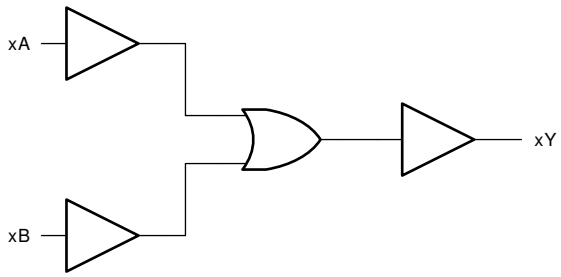

概略ロジック図

このリソースの元の言語は英語です。翻訳は概要を便宜的に提供するもので、自動化ツール (機械翻訳) を使用していることがあり、TI では翻訳の正確性および妥当性につきましては一切保証いたしません。実際の設計などの前には、ti.com で必ず最新の英語版をご参照くださいますようお願いいたします。

Table of Contents

1 特長 ... 1
2 アプリケーション ... 1
3 概要 ... 1
4 Pin Configuration and Functions ... 3
5 Specifications ... 4
5.1 Absolute Maximum Ratings ... 4
5.2 ESD Ratings ... 4
5.3 Recommended Operating Conditions ... 4
5.4 Thermal Information ... 5
5.5 Electrical Characteristics ... 5
5.6 Switching Characteristics ... 6
5.7 Noise Characteristics ... 6
5.8 Typical Characteristics ... 7
6 Parameter Measurement Information ... 10
7 Detailed Description ... 11
7.1 Overview ... 11
7.2 Functional Block Diagram ... 11
7.3 Feature Description ... 11
7.4 Device Functional Modes ... 13
8 Application and Implementation ... 14
8.1 Application Information ... 14
8.2 Typical Application ... 14
8.3 Power Supply Recommendations ... 16
8.4 Layout ... 16
9 Device and Documentation Support ... 18
9.1 Documentation Support ... 18
9.2 ドキュメントの更新通知を受け取る方法 ... 18
9.3 サポート・リソース ... 18
9.4 Trademarks ... 18
9.5 静電気放電に関する注意事項 ... 18
9.6 用語集 ... 18
10 Revision History ... 18
11 Mechanical, Packaging, and Orderable Information ... 18

Copyright © 2024 Texas Instruments Incorporated

4 Pin Configuration and Functions

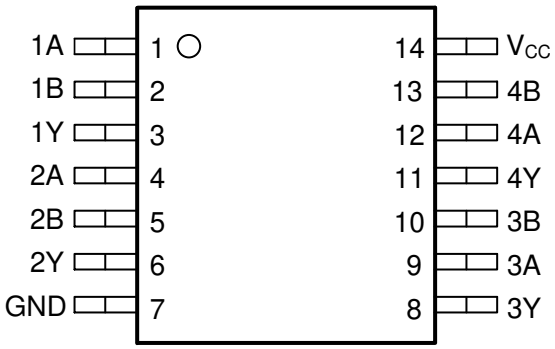

図 4-1. PW Package, 14-Pin TSSOP (Top View)

表 4-1. Pin Functions

PIN		TYPE[1]	DESCRIPTION
NAME	NO.		
1A	1	I	Channel 1, Input A
1B	2	I	Channel 1, Input B
1Y	3	O	Channel 1, Output Y
2A	4	I	Channel 2, Input A
2B	5	I	Channel 2, Input B
2Y	6	O	Channel 2, Output Y
GND	7	G	Ground
3Y	8	O	Channel 3, Output Y
3A	9	I	Channel 3, Input A
3B	10	I	Channel 3, Input B
4Y	11	O	Channel 4, Output Y
4A	12	I	Channel 4, Input A
4B	13	I	Channel 4, Input B
V_{CC}	14	P	Positive Supply

(1) I = Input, O = Output, I/O = Input or Output, G = Ground, P = Power.

Copyright © 2024 Texas Instruments Incorporated

5 Specifications

5.1 Absolute Maximum Ratings

over operating free-air temperature range (unless otherwise noted)(1)

			MIN	MAX	UNIT
V_{CC}	Supply voltage range		–0.5	7	V
V_I	Input voltage range(2)		–0.5	7	V
V_O	Voltage range applied to any output in the high-impedance or power-off state(2)		–0.5	7	V
V_O	Output voltage range(2)		–0.5	V_{CC} + 0.5	V
I_{IK}	Input clamp current	V_I < -0.5 V		-20	mA
I_{OK}	Output clamp current	V_O < -0.5 V or V_O > V_{CC} + 0.5 V		±20	mA
I_O	Continuous output current	V_O = 0 to V_{CC}		±25	mA
	Continuous output current through V_{CC} or GND			±50	mA
T_{stg}	Storage temperature		-65	150	°C

(1) Operation outside the *Absolute Maximum Ratings* may cause permanent device damage. Absolute maximum ratings do not imply functional operation of the device at these or any other conditions beyond those listed under *Recommended Operating Conditions*. If briefly operating outside the *Recommended Operating Conditions* but within the *Absolute Maximum Ratings*, the device may not sustain damage, but it may not be fully functional. Operating the device in this manner may affect device reliability, functionality, performance, and shorten the device lifetime.
(2) The input and output voltage ratings may be exceeded if the input and output current ratings are observed.

5.2 ESD Ratings

			VALUE	UNIT
$V_{(ESD)}$	Electrostatic discharge	Human-body model (HBM), per ANSI/ESDA/JEDEC JS-001(1)	±2000	V
		Charged-device model (CDM), per ANSI/ESDA/JEDEC JS-002(2)	±1000	

(1) JEDEC document JEP155 states that 500-V HBM allows safe manufacturing with a standard ESD control process.
(2) JEDEC document JEP157 states that 250-V CDM allows safe manufacturing with a standard ESD control process.

5.3 Recommended Operating Conditions

over operating free-air temperature range (unless otherwise noted)

			MIN	MAX	UNIT
V_{CC}	Supply voltage		1.2	5.5	V
V_I	Input voltage		0	5.5	V
V_O	Output voltage		0	V_{CC}	V
V_{IH}	High-level input voltage	V_{CC} = 1.2 V to 1.3 V	0.78		V
V_{IH}	High-level input voltage	V_{CC} = 1.65 V to 2 V	1.1		V
		V_{CC} = 2.25 V to 2.75 V	1.28		
		V_{CC} = 3 V to 3.6 V	1.45		
		V_{CC} = 4.5 V to 5.5 V	2		
V_{IL}	Low-Level input voltage	V_{CC} = 1.2 V to 1.3 V		0.18	V
V_{IL}	Low-Level input voltage	V_{CC} = 1.65 V to 2 V		0.5	V
		V_{CC} = 2.25 V to 2.75 V		0.65	
		V_{CC} = 3 V to 3.6 V		0.75	
		V_{CC} = 4.5 V to 5.5 V		0.85	
I_O	Output current	V_{CC} = 1.6 V to 2 V		±3	mA
		V_{CC} = 2.25 V to 2.75 V		±7	
		V_{CC} = 3.3 V to 5.0 V		±15	
I_O	Output Current	V_{CC} = 4.5 V to 5.5 V		±25	mA

Copyright © 2024 Texas Instruments Incorporated

5.3 Recommended Operating Conditions (続き)

over operating free-air temperature range (unless otherwise noted)

			MIN	MAX	UNIT
$\Delta t/\Delta v$	Input transition rise or fall rate	V_{CC} = 1.6 V to 5.0 V		20	ns/V
T_A	Operating free-air temperature		-55	125	°C

5.4 Thermal Information

THERMAL METRIC(1)		SN54SC4T32-SEP PW (TSSOP) 14 PINS	UNIT
$R_{\theta JA}$	Junction-to-ambient thermal resistance	147.7	°C/W
$R_{\theta JC(top)}$	Junction-to-case (top) thermal resistance	77.4	°C/W
$R_{\theta JB}$	Junction-to-board thermal resistance	90.9	°C/W
Ψ_{JT}	Junction-to-top characterization parameter	27.2	°C/W
Y_{JB}	Junction-to-board characterization parameter	90.2	°C/W
$R_{\theta JC(bot)}$	Junction-to-case (bottom) thermal resistance	N/A	°C/W

(1) For more information about traditional and new thermal metrics, see the Semiconductor and IC Package Thermal Metrics application report.

5.5 Electrical Characteristics

over operating free-air temperature range; typical ratings measured at T_A = 25°C (unless otherwise noted).

PARAMETER	TEST CONDITIONS	V_{CC}	MIN	TYP	MAX	UNIT
V_{OH}	I_{OH} = -50 µA	1.2 V to 5.5 V	V_{CC}-0.2			V
	I_{OH}= -50 µA	1.65 V to 5.5 V	V_{CC}-0.1			
	I_{OH} = -1 mA	1.2 V	0.8			
	I_{OH} = -2 mA	1.65 V to 2 V	1.21	1.7(1)		
	I_{OH} = -3 mA	2.25 V to 2.75 V	1.93	2.4(1)		
	I_{OH} = -5.5 mA	3 V to 3.6 V	2.49	3.08(1)		
	I_{OH} = -8 mA	4.5 V to 5.5 V	3.95	4.65(1)		
	I_{OH}= –24 mA	4.5 V to 5.5 V	3.15			
V_{OL}	I_{OL}= 50 µA	1.2 V to 5.5 V			0.1	V
	I_{OL}= 50 µA	1.65 V to 5.5 V			0.1	
	I_{OL} = 1 mA	1.2 V			0.2	
	I_{OL} = 2 mA	1.65 V to 2 V		0.1(1)	0.25	
	I_{OL} = 3 mA	2.25 V to 2.75 V		0.1(1)	0.2	
	I_{OL} = 5.5 mA	3 V to 3.6 V		0.2(1)	0.25	
	I_{OL}= 8 mA	4.5 V to 5.5 V		0.3(1)	0.35	
	I_{OL}= 24 mA	4.5 V to 5.5 V			0.75	
I_I	V_I = 0 V or V_{CC}	0 V to 5.5 V		±0.1	±1	µA
I_{CC}	V_I = V_{CC} or GND, I_O = 0	1.2 V to 5.5 V		2	93	µA
ΔI_{CC}	One input at 0.3 V or 3.4 V, other inputs at 0 or V_{CC}, I_O = 0	5.5 V		1.35	1.5	mA
	One input at 0.3 V or 1.1 V, other inputs at 0 or V_{CC}, I_O = 0	1.8 V			68	µA
C_I	V_I = V_{CC} or GND	5 V		3	5	pF
C_O	V_O = V_{CC} or GND	5 V		5	8	pF

Copyright © 2024 Texas Instruments Incorporated

over operating free-air temperature range; typical ratings measured at T_A = 25°C (unless otherwise noted).

PARAMETER	TEST CONDITIONS	V_{CC}	MIN	TYP	MAX	UNIT
C_{PD} (2) (3)	C_L = 50 pF, F = 10 MHz	1.2 V to 5.5 V		11	25	pF

(1) Typical value at nearest nominal voltage (1.8 V, 2.5 V, 3.3 V, and 5 V)
(2) C_{PD} is used to determine the dynamic power consumption, per channel.
(3) $P_D = V_{CC}{}^2 x F_I x (C_{PD} + C_L)$ where F_I= input frequency, C_L= output load capacitance, V_{CC}= supply voltage.

5.6 Switching Characteristics

over operating free-air temperature range; typical ratings measured at T_A = 25°C (unless otherwise noted).

PARAMETER	FROM (INPUT)	TO (OUTPUT)	LOAD CAPACITANCE	V_{CC}	MIN	TYP	MAX	UNIT
t_{PHL}	A or B	Y	C_L = 15 pF	1.2 V		44.5	117.5	nS
t_{PLH}	A or B	Y	C_L = 15 pF	1.2 V		39.5	102.8	nS
t_{PHL}	A or B	Y	C_L = 50 pF	1.2 V		48.7	137.2	nS
t_{PLH}	A or B	Y	C_L = 50 pF	1.2 V		45.1	115.2	nS
t_{PHL}	A or B	Y	C_L = 15 pF	1.8 V		15.9	38.1	nS
t_{PLH}	A or B	Y	C_L = 15 pF	1.8 V		13.5	33.7	nS
t_{PHL}	A or B	Y	C_L = 50 pF	1.8 V		18.6	43.6	nS
t_{PLH}	A or B	Y	C_L = 50 pF	1.8 V		15.6	38.0	nS
t_{PHL}	A or B	Y	C_L = 15 pF	2.5 V		9.4	22.6	nS
t_{PLH}	A or B	Y	C_L = 15 pF	2.5 V		7.7	20.2	nS
t_{PHL}	A or B	Y	C_L = 50 pF	2.5 V		11.3	26.4	nS
t_{PLH}	A or B	Y	C_L = 50 pF	2.5 V		9.5	23.1	nS
t_{PHL}	A or B	Y	C_L = 15 pF	3.3 V		7.0	16.1	nS
t_{PLH}	A or B	Y	C_L = 15 pF	3.3 V		5.7	14.6	nS
t_{PHL}	A or B	Y	C_L = 50 pF	3.3 V		8.2	19.0	nS
t_{PLH}	A or B	Y	C_L = 50 pF	3.3 V		7.0	16.7	nS
t_{PHL}	A or B	Y	C_L = 15 pF	5 V		5.0	10.6	nS
t_{PLH}	A or B	Y	C_L = 15 pF	5 V		4.7	9.7	nS
t_{PHL}	A or B	Y	C_L = 50 pF	5 V		6.1	13.0	nS
t_{PLH}	A or B	Y	C_L = 50 pF	5 V		5.7	11.4	nS

5.7 Noise Characteristics

VCC = 5 V, CL = 50 pF, TA = 25°C

PARAMETER	DESCRIPTION	MIN	TYP	MAX	UNIT
$V_{OL(P)}$	Quiet output, maximum dynamic V_{OL}		1	1.2	V
$V_{OL(V)}$	Quiet output, minimum dynamic V_{OL}	-0.8	-0.3		V
$V_{OH(V)}$	Quiet output, minimum dynamic V_{OH}	4.4	5		V
$V_{IH(D)}$	High-level dynamic input voltage	2.1			V
$V_{IL(D)}$	Low-level dynamic input voltage			0.5	V

Copyright © 2024 Texas Instruments Incorporated

5.8 Typical Characteristics

T_A = 25°C (unless otherwise noted)

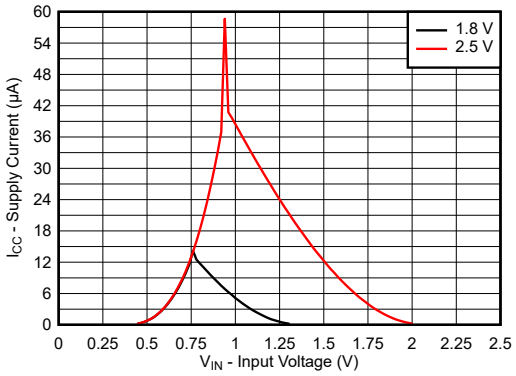

図 5-1. Supply Current Across Input Voltage 1.8-V and 2.5-V Supply

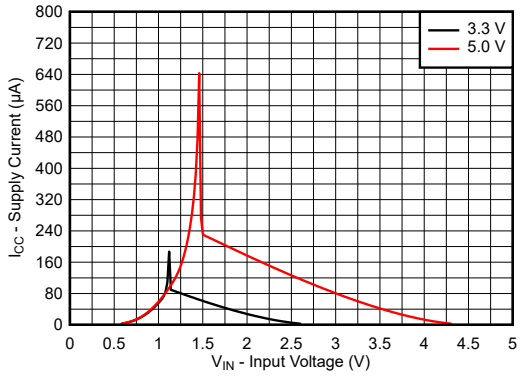

図 5-2. Supply Current Across Input Voltage 3.3-V and 5.0-V Supply

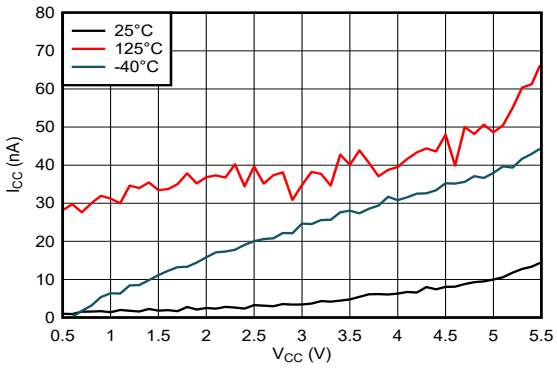

図 5-3. Supply Current Across Supply Voltage

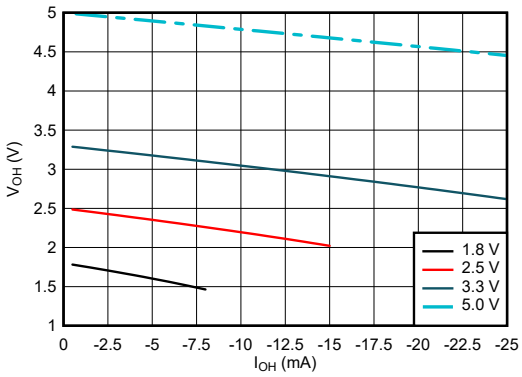

図 5-4. Output Voltage vs Current in HIGH State

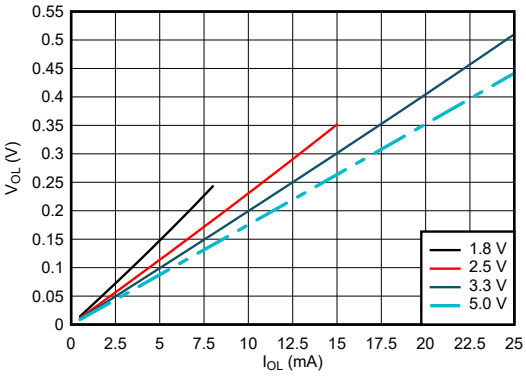

図 5-5. Output Voltage vs Current in LOW State

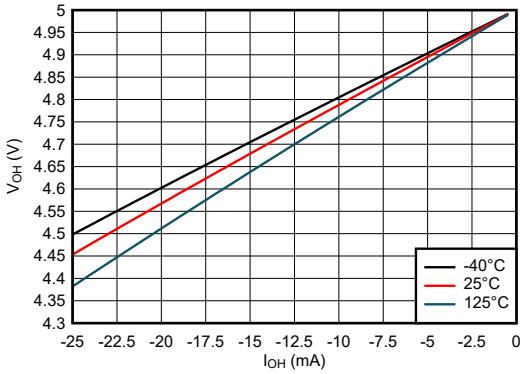

図 5-6. Output Voltage vs Current in HIGH State; 5-V Supply

Copyright © 2024 Texas Instruments Incorporated

5.8 Typical Characteristics (continued)

T_A = 25°C (unless otherwise noted)

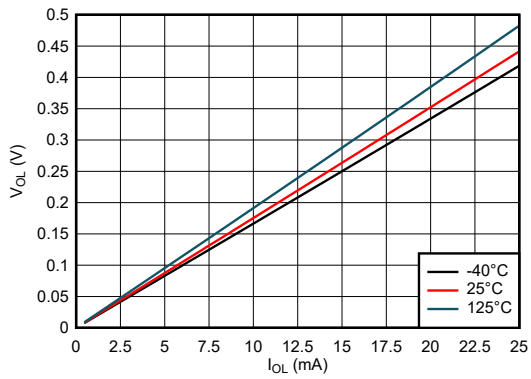

図 5-7. Output Voltage vs Current in LOW State; 5-V Supply

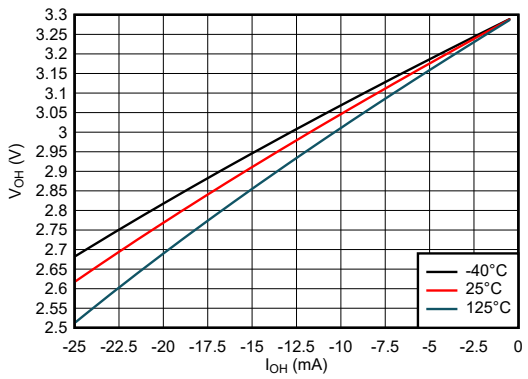

図 5-8. Output Voltage vs Current in HIGH State; 3.3-V Supply

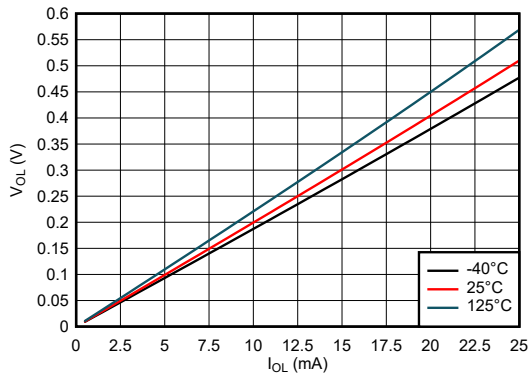

図 5-9. Output Voltage vs Current in LOW State; 3.3-V Supply

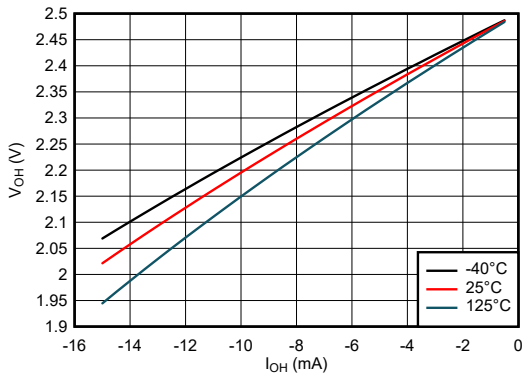

図 5-10. Output Voltage vs Current in HIGH State; 2.5-V Supply

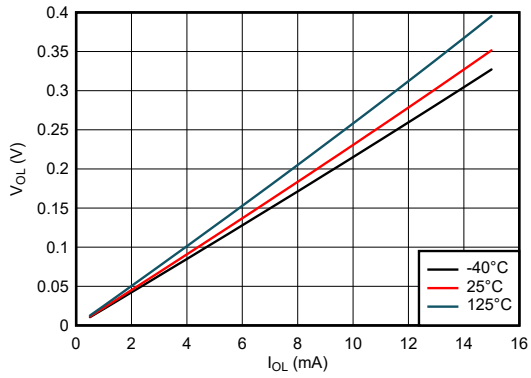

図 5-11. Output Voltage vs Current in LOW State; 2.5-V Supply

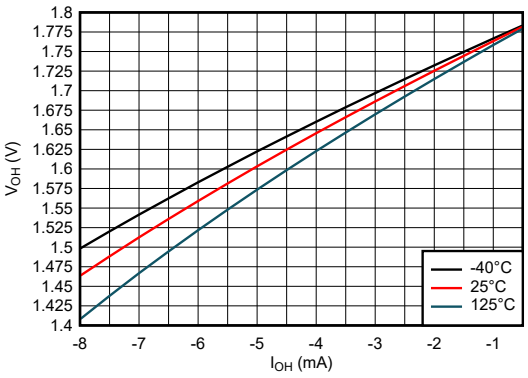

図 5-12. Output Voltage vs Current in HIGH State; 1.8-V Supply

Copyright © 2024 Texas Instruments Incorporated

5.8 Typical Characteristics (continued)

T_A = 25°C (unless otherwise noted)

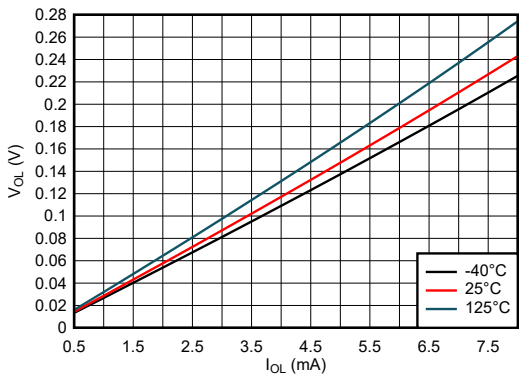

図 5-13. Output Voltage vs Current in LOW State; 1.8-V Supply

6 Parameter Measurement Information

Phase relationships between waveforms were chosen arbitrarily. All input pulses are supplied by generators having the following characteristics: PRR ≤ 1 MHz, Z_O = 50 Ω, t_t< 2.5 ns.

For clock inputs, f_{max} is measured when the input duty cycle is 50%.

The outputs are measured one at a time with one input transition per measurement.

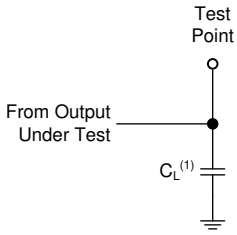

(1) C_L includes probe and test-fixture capacitance.

図 6-1. Load Circuit for Push-Pull Outputs

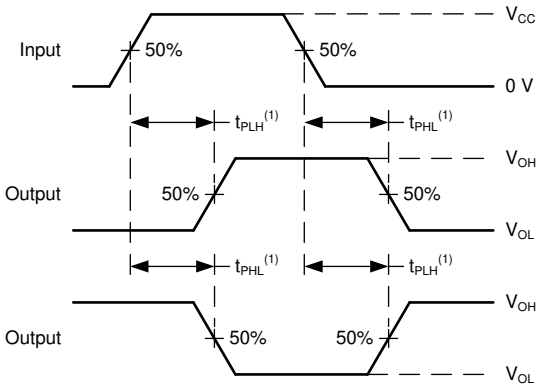

(1) The greater between t_{PLH} and t_{PHL} is the same as t_{pd}.

図 6-2. Voltage Waveforms Propagation Delays

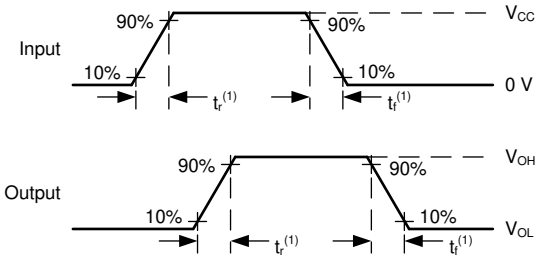

(1) The greater between t_r and t_f is the same as t_t.

図 6-3. Voltage Waveforms, Input and Output Transition Times

Copyright © 2024 Texas Instruments Incorporated

7 Detailed Description

7.1 Overview

The SN54SC4T32-SEP contains a single buffer with extended voltage operation to allow for level translation. The buffer performs the Boolean function Y = A in positive logic. The output level is referenced to the supply voltage (V_{CC}) and supports 1.8-V, 2.5-V, 3.3-V, and 5-V CMOS levels.

7.2 Functional Block Diagram

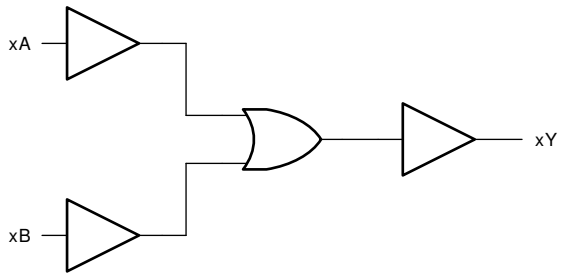

7.3 Feature Description

7.3.1 Balanced CMOS Push-Pull Outputs

This device includes balanced CMOS push-pull outputs. The term *balanced* indicates that the device can sink and source similar currents. The drive capability of this device may create fast edges into light loads so routing and load conditions should be considered to prevent ringing. Additionally, the outputs of this device are capable of driving larger currents than the device can sustain without being damaged. It is important for the output power of the device to be limited to avoid damage due to overcurrent. The electrical and thermal limits defined in the *Absolute Maximum Ratings* must be followed at all times.

Unused push-pull CMOS outputs should be left disconnected.

7.3.2 Clamp Diode Structure

As 図 7-1 shows, the outputs to this device have both positive and negative clamping diodes, and the inputs to this device have negative clamping diodes only.

> **注意**
> Voltages beyond the values specified in the *Absolute Maximum Ratings* table can cause damage to the device. The input and output voltage ratings may be exceeded if the input and output clamp-current ratings are observed.

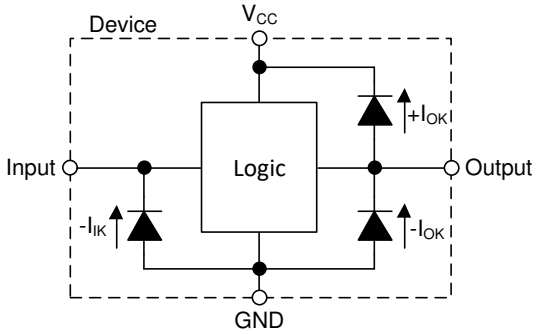

図 7-1. Electrical Placement of Clamping Diodes for Each Input and Output

7.3.3 SCxT Enhanced Input Voltage

The SN54SC4T32-SEP belongs to TI's SCxT family of logic devices with integrated voltage level translation. This family of devices was designed with reduced input voltage thresholds to support up-translation, and inputs

Copyright © 2024 Texas Instruments Incorporated

tolerant of signals with up to 5.5 V levels to support down-translation. The output voltage will always be referenced to the supply voltage (V_{CC}), as described in the *Electrical Characteristics* table. For proper functionality, input signals must remain at or below the specified $V_{IH(MIN)}$ level for a HIGH input state, and at or below the specified $V_{IL(MAX)}$ for a LOW input state. 図 7-2 shows the typical V_{IH} and V_{IL} levels for the SCxT family of devices, as well as the voltage levels for standard CMOS devices for comparison.

The inputs are high impedance and are typically modeled as a resistor in parallel with the input capacitance given in the *Electrical Characteristics*. The worst case resistance is calculated with the maximum input voltage, given in the *Absolute Maximum Ratings*, and the maximum input leakage current, given in the *Electrical Characteristics*, using Ohm's law (R = V ÷ I).

The inputs require the input signals to transition between valid logic states quickly, as defined by the input transition time or rate in the *Recommended Operating Conditions* table. Failing to meet this specification will result in excessive power consumption and can cause oscillations. More details can be found in the *Implications of Slow or Floating CMOS Inputs* application report.

Do not leave inputs floating at any time during operation. Unused inputs must be terminated at V_{CC} or GND. If a system will not be actively driving an input at all times, a pull-up or pull-down resistor can be added to provide a valid input voltage during these times. The resistor value will depend on multiple factors; however, a 10-kΩ resistor is recommended and will typically meet all requirements.

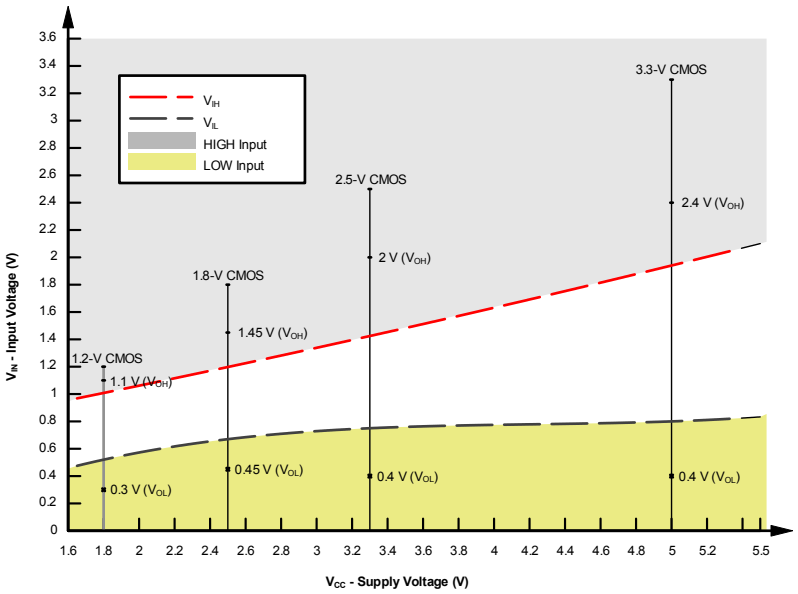

図 7-2. SCxT Input Voltage Levels

7.3.3.1 Down Translation

Signals can be translated down using the SN54SC4T32-SEP. The voltage applied at the V_{CC} will determine the output voltage and the input thresholds as described in the *Recommended Operating Conditions* and *Electrical Characteristics* tables.

When connected to a high-impedance input, the output voltage will be approximately V_{CC} in the HIGH state, and 0 V in the LOW state. Ensure that the input signals in the HIGH state are between $V_{IH(MIN)}$ and 5.5 V, and input signals in the LOW state are lower than $V_{IL(MAX)}$ as shown in 図 7-2.

For example, standard CMOS inputs for devices operating at 5.0 V, 3.3 V or 2.5 V can be down-translated to match 1.8 V CMOS signals when operating from 1.8-V V_{CC}. See 図 7-3.

Down Translation Combinations are as follows:

Copyright © 2024 Texas Instruments Incorporated

- 1.8-V V_{CC} – Inputs from 2.5 V, 3.3 V, and 5.0 V
- 2.5-V V_{CC} – Inputs from 3.3 V and 5.0 V
- 3.3-V V_{CC} – Inputs from 5.0 V

7.3.3.2 Up Translation

Input signals can be up translated using the SN54SC4T32-SEP. The voltage applied at V_{CC} will determine the output voltage and the input thresholds as described in the *Recommended Operating Conditions* and *Electrical Characteristics* tables. When connected to a high-impedance input, the output voltage will be approximately V_{CC} in the HIGH state, and 0 V in the LOW state.

The inputs have reduced thresholds that allow for input HIGH state levels which are much lower than standard values. For example, standard CMOS inputs for a device operating at a 5-V supply will have a $V_{IH(MIN)}$ of 3.5 V. For the SN54SC4T32-SEP, $V_{IH(MIN)}$ with a 5-V supply is only 2 V, which would allow for up-translation from a typical 2.5-V to 5-V signals.

As shown in 図 7-3, ensure that the input signals in the HIGH state are above $V_{IH(MIN)}$ and input signals in the LOW state are lower than $V_{IL(MAX)}$.

Up Translation Combinations are as follows:

- 1.8-V V_{CC} – Inputs from 1.2 V
- 2.5-V V_{CC} – Inputs from 1.8 V
- 3.3-V V_{CC} – Inputs from 1.8 V and 2.5 V
- 5.0-V V_{CC} – Inputs from 2.5 V and 3.3 V

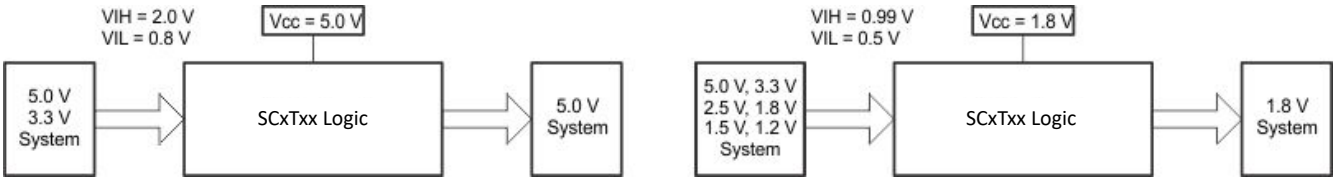

図 7-3. SCxT Up and Down Translation Example

7.4 Device Functional Modes

Function Table is the function table for the SN54SC4T32-SEP.

表 7-1. Function Table

INPUTS(1)		OUTPUT
A	B	Y
H	H	H
L	H	H
H	L	H
L	L	L

(1) H = high voltage level, L = low voltage level, X = do not care

8 Application and Implementation

注

Information in the following applications sections is not part of the TI component specification, and TI does not warrant its accuracy or completeness. TI's customers are responsible for determining suitability of components for their purposes, as well as validating and testing their design implementation to confirm system functionality.

8.1 Application Information

The SNx4AHCT32 is a low-drive CMOS device that can be used for a multitude of bus-interface type applications where output ringing is a concern. The low drive and slow edge rates will minimize overshoot and undershoot on the outputs. The TTL inputs can accept voltages down to 3.3 V and can translate up to 5 V.

8.2 Typical Application

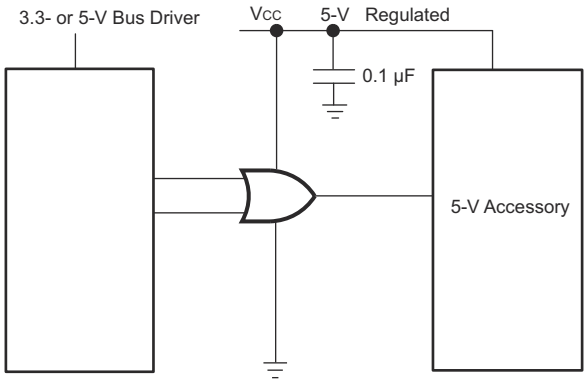

図 8-1. Typical Application Diagram for a Single Gate

8.2.1 Design Requirements

8.2.1.1 Power Considerations

Ensure the desired supply voltage is within the range specified in the *Recommended Operating Conditions*. The supply voltage sets the device's electrical characteristics as described in the *Electrical Characteristics* section.

The positive voltage supply must be capable of sourcing current equal to the total current to be sourced by all outputs of the SN54SC4T32-SEP plus the maximum static supply current, I_{CC}, listed in the *Electrical Characteristics*, and any transient current required for switching. The logic device can only source as much current that is provided by the positive supply source. Be sure to not exceed the maximum total current through V_{CC} listed in the *Absolute Maximum Ratings*.

The ground must be capable of sinking current equal to the total current to be sunk by all outputs of the SN54SC4T32-SEP plus the maximum supply current, I_{CC}, listed in the *Electrical Characteristics*, and any transient current required for switching. The logic device can only sink as much current that can be sunk into its ground connection. Be sure to not exceed the maximum total current through GND listed in the *Absolute Maximum Ratings*.

The SN54SC4T32-SEP can drive a load with a total capacitance less than or equal to 50 pF while still meeting all of the data sheet specifications. Larger capacitive loads can be applied; however, it is not recommended to exceed 50 pF.

The SN54SC4T32-SEP can drive a load with total resistance described by $R_L \geq V_O / I_O$, with the output voltage and current defined in the *Electrical Characteristics* table with V_{OH} and V_{OL}. When outputting in the HIGH state,

Copyright © 2024 Texas Instruments Incorporated

the output voltage in the equation is defined as the difference between the measured output voltage and the supply voltage at the V_{CC} pin.

Total power consumption can be calculated using the information provided in *CMOS Power Consumption and Cpd Calculation*.

Thermal increase can be calculated using the information provided in *Thermal Characteristics of Standard Linear and Logic (SLL) Packages and Devices*.

> 注意
> The maximum junction temperature, $T_{J(max)}$ listed in the *Absolute Maximum Ratings*, is an additional limitation to prevent damage to the device. Do not violate any values listed in the *Absolute Maximum Ratings*. These limits are provided to prevent damage to the device.

8.2.1.2 Input Considerations

Input signals must cross $V_{IL(max)}$ to be considered a logic LOW, and $V_{IH(min)}$ to be considered a logic HIGH. Do not exceed the maximum input voltage range found in the *Absolute Maximum Ratings*.

Unused inputs must be terminated to either V_{CC} or ground. The unused inputs can be directly terminated if the input is completely unused, or they can be connected with a pull-up or pull-down resistor if the input will be used sometimes, but not always. A pull-up resistor is used for a default state of HIGH, and a pull-down resistor is used for a default state of LOW. The drive current of the controller, leakage current into the SN54SC4T32-SEP (as specified in the *Electrical Characteristics*), and the desired input transition rate limits the resistor size. A 10-kΩ resistor value is often used due to these factors.

The SN54SC4T32-SEP has CMOS inputs and thus requires fast input transitions to operate correctly, as defined in the *Recommended Operating Conditions* table. Slow input transitions can cause oscillations, additional power consumption, and reduction in device reliability.

Refer to the *Feature Description* section for additional information regarding the inputs for this device.

8.2.1.3 Output Considerations

The positive supply voltage is used to produce the output HIGH voltage. Drawing current from the output will decrease the output voltage as specified by the V_{OH} specification in the *Electrical Characteristics*. The ground voltage is used to produce the output LOW voltage. Sinking current into the output will increase the output voltage as specified by the V_{OL} specification in the *Electrical Characteristics*.

Push-pull outputs that could be in opposite states, even for a very short time period, should never be connected directly together. This can cause excessive current and damage to the device.

Two channels within the same device with the same input signals can be connected in parallel for additional output drive strength.

Unused outputs can be left floating. Do not connect outputs directly to V_{CC} or ground.

Refer to the *Feature Description* section for additional information regarding the outputs for this device.

Copyright © 2024 Texas Instruments Incorporated

8.2.2 Detailed Design Procedure

1. Add a decoupling capacitor from V_{CC} to GND. The capacitor needs to be placed physically close to the device and electrically close to both the V_{CC} and GND pins. An example layout is shown in the *Layout* section.
2. Ensure the capacitive load at the output is ≤ 50 pF. This is not a hard limit; it will, however, optimize performance. This can be accomplished by providing short, appropriately sized traces from the SN54SC4T32-SEP to one or more of the receiving devices.
3. Ensure the resistive load at the output is larger than (V_{CC} / $I_{O(max)}$) Ω. Doing so will not violate the maximum output current from the *Absolute Maximum Ratings*. Most CMOS inputs have a resistive load measured in MΩ; much larger than the minimum calculated previously.
4. Thermal issues are rarely a concern for logic gates; the power consumption and thermal increase, however, can be calculated using the steps provided in the application report, *CMOS Power Consumption and Cpd Calculation*.

8.2.3 Application Curves

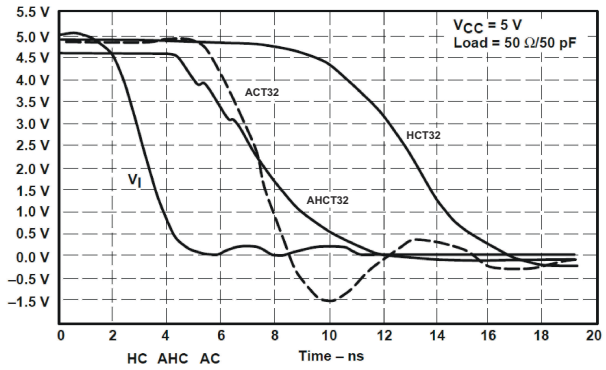

図 8-2. Switching Characteristics Comparison

8.3 Power Supply Recommendations

The power supply can be any voltage between the minimum and maximum supply voltage rating located in the *Recommended Operating Conditions*. Each V_{CC} terminal should have a good bypass capacitor to prevent power disturbance. A 0.1-μF capacitor is recommended for this device. It is acceptable to parallel multiple bypass capacitors to reject different frequencies of noise. The 0.1-μF and 1-μF capacitors are commonly used in parallel. The bypass capacitor should be installed as close to the power terminal as possible for best results, as shown in the following layout example.

8.4 Layout

8.4.1 Layout Guidelines

When using multiple-input and multiple-channel logic devices, inputs must never be left floating. In many cases, functions or parts of functions of digital logic devices are unused; for example, when only two inputs of a triple-input AND gate are used or only 3 of the 4 buffer gates are used. Such unused input pins must not be left unconnected because the undefined voltages at the outside connections result in undefined operational states. All unused inputs of digital logic devices must be connected to a logic high or logic low voltage, as defined by the input voltage specifications, to prevent them from floating. The logic level that must be applied to any particular unused input depends on the function of the device. Generally, the inputs are tied to GND or V_{CC}, whichever makes more sense for the logic function or is more convenient.

Copyright © 2024 Texas Instruments Incorporated

8.4.2 Layout Example

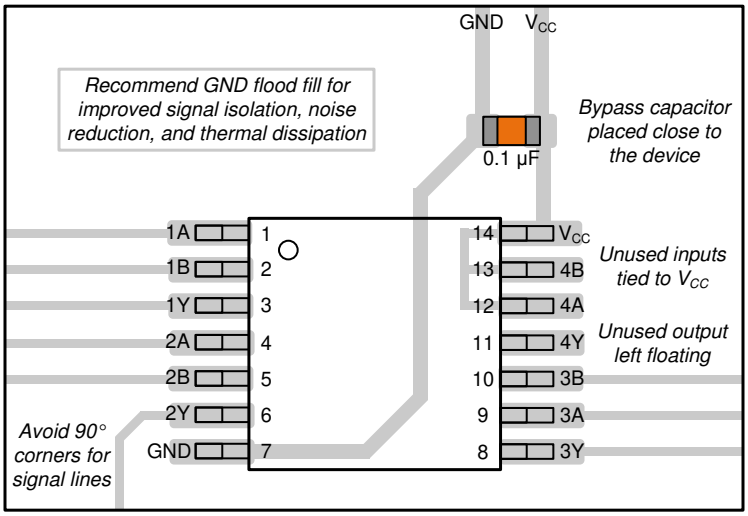

図 8-3. Example Layout for the SN54SC4T32-SEP

9 Device and Documentation Support

9.1 Documentation Support

9.1.1 Related Documentation

For related documentation, see the following:

- Texas Instruments, *Implications of Slow or Floating CMOS Inputs* application report

9.2 ドキュメントの更新通知を受け取る方法

ドキュメントの更新についての通知を受け取るには、www.tij.co.jp のデバイス製品フォルダを開いてください。[通知] をクリックして登録すると、変更されたすべての製品情報に関するダイジェストを毎週受け取ることができます。 変更の詳細については、改訂されたドキュメントに含まれている改訂履歴をご覧ください。

9.3 サポート・リソース

テキサス・インスツルメンツ E2E™ サポート・フォーラムは、エンジニアが検証済みの回答と設計に関するヒントをエキスパートから迅速かつ直接得ることができる場所です。既存の回答を検索したり、独自の質問をしたりすることで、設計で必要な支援を迅速に得ることができます。

リンクされているコンテンツは、各寄稿者により「現状のまま」提供されるものです。これらはテキサス・インスツルメンツの仕様を構成するものではなく、必ずしもテキサス・インスツルメンツの見解を反映したものではありません。テキサス・インスツルメンツの使用条件を参照してください。

9.4 Trademarks

テキサス・インスツルメンツ E2E™ is a trademark of Texas Instruments.
すべての商標は、それぞれの所有者に帰属します。

9.5 静電気放電に関する注意事項



この IC は、ESD によって破損する可能性があります。テキサス・インスツルメンツは、IC を取り扱う際には常に適切な注意を払うことを推奨します。正しい取り扱いおよび設置手順に従わない場合、デバイスを破損するおそれがあります。

ESD による破損は、わずかな性能低下からデバイスの完全な故障まで多岐にわたります。精密な IC の場合、パラメータがわずかに変化するだけで公表されている仕様から外れる可能性があるため、破損が発生しやすくなっています。

9.6 用語集

テキサス・インスツルメンツ用語集　　この用語集には、用語や略語の一覧および定義が記載されています。

10 Revision History

DATE	REVSION	NOTES
November 2023	*	Initial Release

11 Mechanical, Packaging, and Orderable Information

The following pages include mechanical, packaging, and orderable information. This information is the most current data available for the designated devices. This data is subject to change without notice and revision of this document. For browser-based versions of this data sheet, refer to the left-hand navigation.

Copyright © 2024 Texas Instruments Incorporated

PACKAGING INFORMATION

Orderable part number	Status (1)	Material type (2)	Package | Pins	Package qty | Carrier	RoHS (3)	Lead finish/ Ball material (4)	MSL rating/ Peak reflow (5)	Op temp (°C)	Part marking (6)
SN54SC4T32MPWTSEP	Active	Production	TSSOP (PW) | 14	250 | SMALL T&R	Yes	NIPDAU	Level-1-260C-UNLIM	-55 to 125	SC32SEP
SN54SC4T32MPWTSEP.A	Active	Production	TSSOP (PW) | 14	250 | SMALL T&R	Yes	NIPDAU	Level-1-260C-UNLIM	-55 to 125	SC32SEP
V62/23629-01XE	Active	Production	TSSOP (PW) | 14	250 | SMALL T&R	Yes	NIPDAU	Level-1-260C-UNLIM	-55 to 125	SC32SEP

(1) **Status:** For more details on status, see our product life cycle.

(2) **Material type:** When designated, preproduction parts are prototypes/experimental devices, and are not yet approved or released for full production. Testing and final process, including without limitation quality assurance, reliability performance testing, and/or process qualification, may not yet be complete, and this item is subject to further changes or possible discontinuation. If available for ordering, purchases will be subject to an additional waiver at checkout, and are intended for early internal evaluation purposes only. These items are sold without warranties of any kind.

(3) **RoHS values:** Yes, No, RoHS Exempt. See the TI RoHS Statement for additional information and value definition.

(4) **Lead finish/Ball material:** Parts may have multiple material finish options. Finish options are separated by a vertical ruled line. Lead finish/Ball material values may wrap to two lines if the finish value exceeds the maximum column width.

(5) **MSL rating/Peak reflow:** The moisture sensitivity level ratings and peak solder (reflow) temperatures. In the event that a part has multiple moisture sensitivity ratings, only the lowest level per JEDEC standards is shown. Refer to the shipping label for the actual reflow temperature that will be used to mount the part to the printed circuit board.

(6) **Part marking:** There may be an additional marking, which relates to the logo, the lot trace code information, or the environmental category of the part.

Multiple part markings will be inside parentheses. Only one part marking contained in parentheses and separated by a "~" will appear on a part. If a line is indented then it is a continuation of the previous line and the two combined represent the entire part marking for that device.

Important Information and Disclaimer: The information provided on this page represents TI's knowledge and belief as of the date that it is provided. TI bases its knowledge and belief on information provided by third parties, and makes no representation or warranty as to the accuracy of such information. Efforts are underway to better integrate information from third parties. TI has taken and continues to take reasonable steps to provide representative and accurate information but may not have conducted destructive testing or chemical analysis on incoming materials and chemicals. TI and TI suppliers consider certain information to be proprietary, and thus CAS numbers and other limited information may not be available for release.

In no event shall TI's liability arising out of such information exceed the total purchase price of the TI part(s) at issue in this document sold by TI to Customer on an annual basis.

TAPE AND REEL INFORMATION

REEL DIMENSIONS

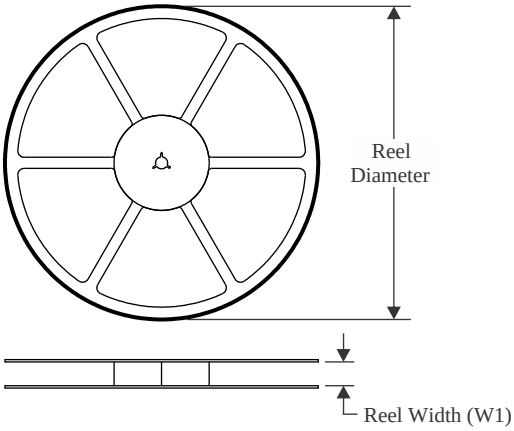

TAPE DIMENSIONS

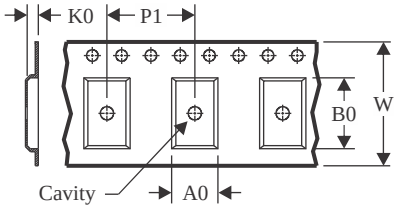

A0	Dimension designed to accommodate the component width
B0	Dimension designed to accommodate the component length
K0	Dimension designed to accommodate the component thickness
W	Overall width of the carrier tape
P1	Pitch between successive cavity centers

QUADRANT ASSIGNMENTS FOR PIN 1 ORIENTATION IN TAPE

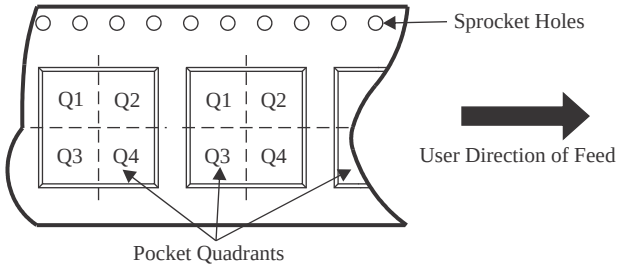

*All dimensions are nominal

Device	Package Type	Package Drawing	Pins	SPQ	Reel Diameter (mm)	Reel Width W1 (mm)	A0 (mm)	B0 (mm)	K0 (mm)	P1 (mm)	W (mm)	Pin1 Quadrant
SN54SC4T32MPWTSEP	TSSOP	PW	14	250	330.0	12.4	6.9	5.6	1.6	8.0	12.0	Q1

TAPE AND REEL BOX DIMENSIONS

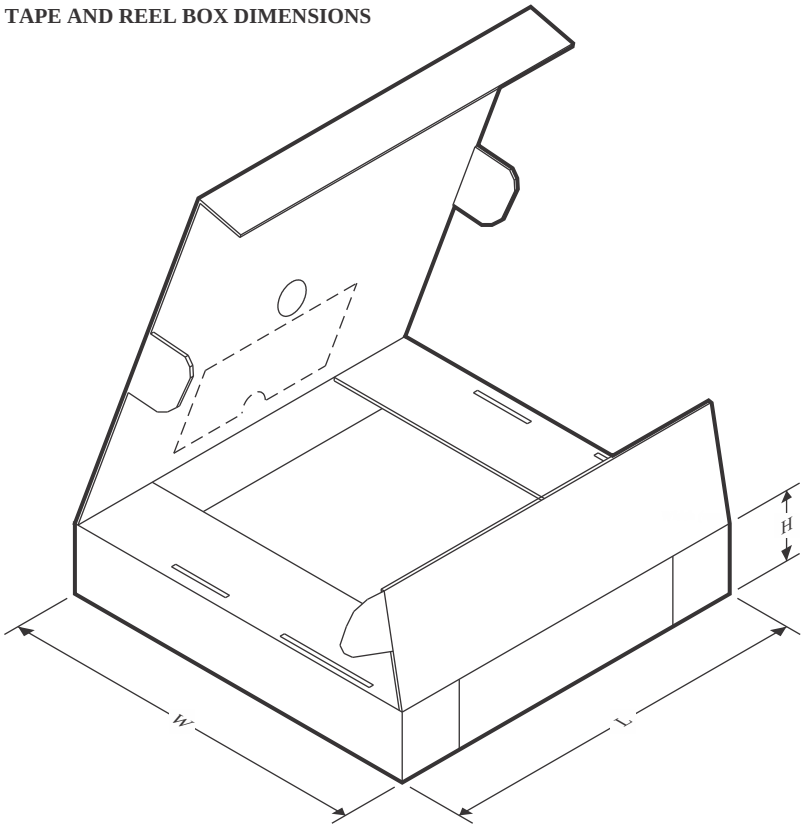

*All dimensions are nominal

Device	Package Type	Package Drawing	Pins	SPQ	Length (mm)	Width (mm)	Height (mm)
SN54SC4T32MPWTSEP	TSSOP	PW	14	250	353.0	353.0	32.0

PACKAGE OUTLINE

PW0014A

TSSOP - 1.2 mm max height

SMALL OUTLINE PACKAGE

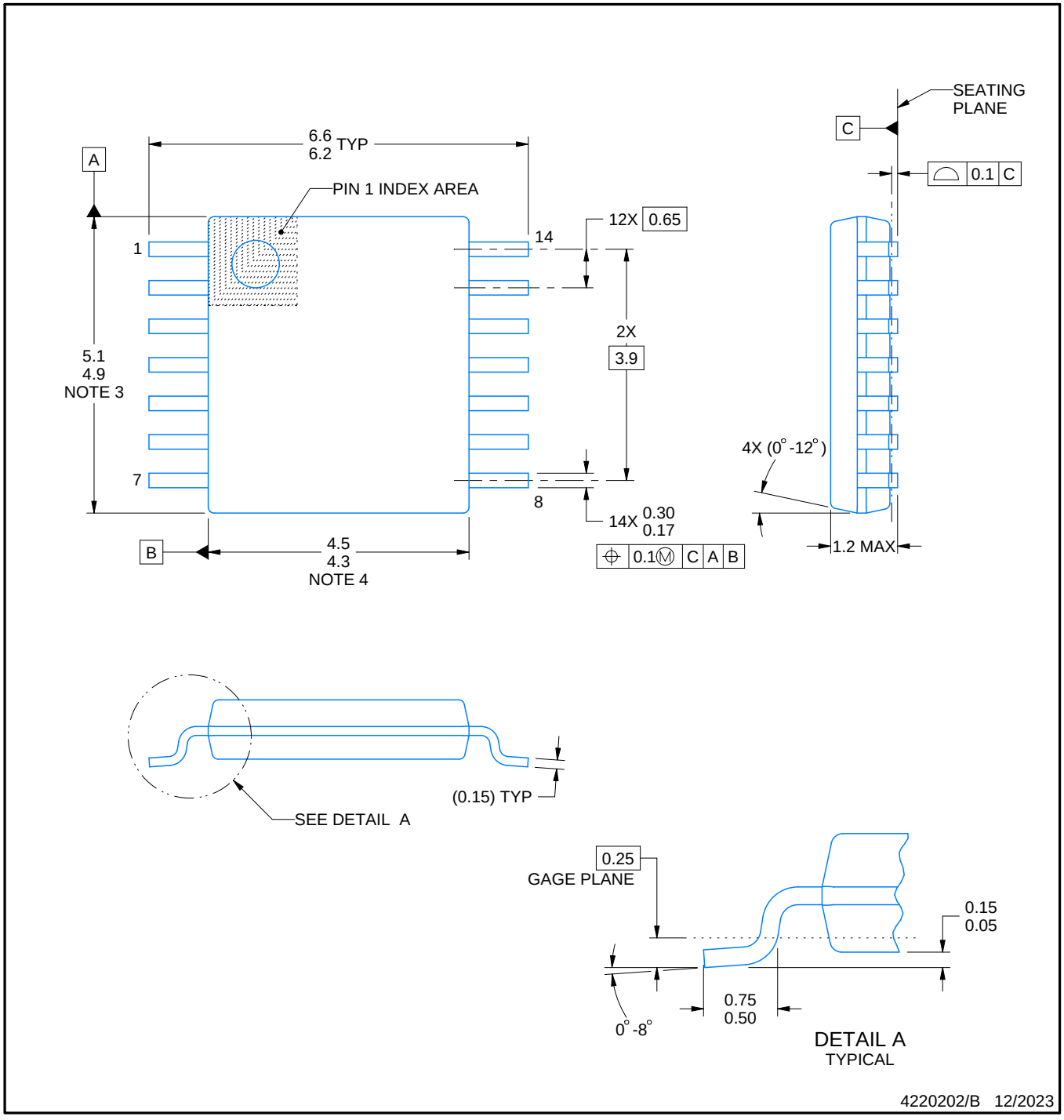

NOTES:

1. All linear dimensions are in millimeters. Any dimensions in parenthesis are for reference only. Dimensioning and tolerancing per ASME Y14.5M.
2. This drawing is subject to change without notice.
3. This dimension does not include mold flash, protrusions, or gate burrs. Mold flash, protrusions, or gate burrs shall not exceed 0.15 mm per side.
4. This dimension does not include interlead flash. Interlead flash shall not exceed 0.25 mm per side.
5. Reference JEDEC registration MO-153.

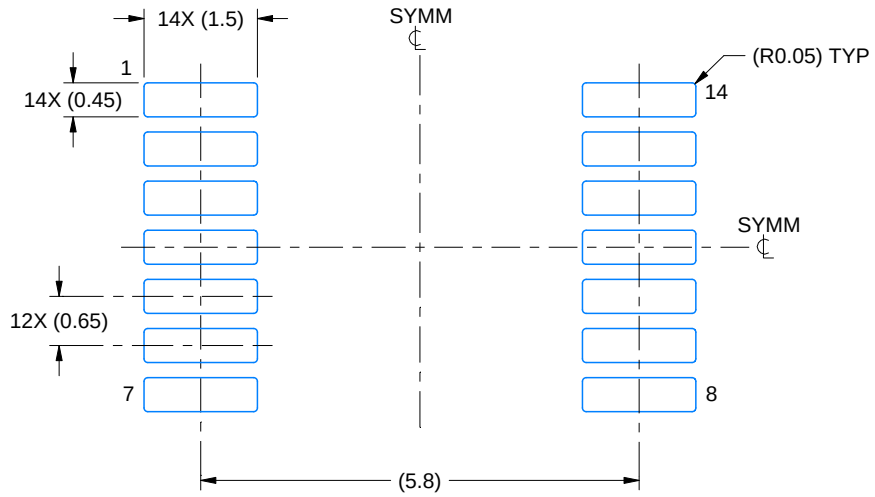

LAND PATTERN EXAMPLE
EXPOSED METAL SHOWN
SCALE: 10X

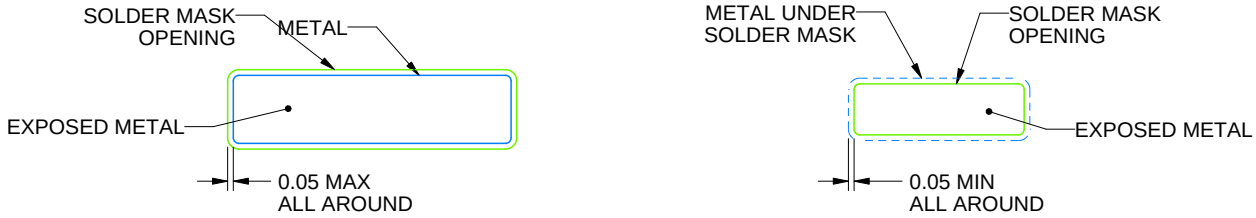

SOLDER MASK DETAILS

4220202/B 12/2023

NOTES: (continued)

6. Publication IPC-7351 may have alternate designs.
7. Solder mask tolerances between and around signal pads can vary based on board fabrication site.

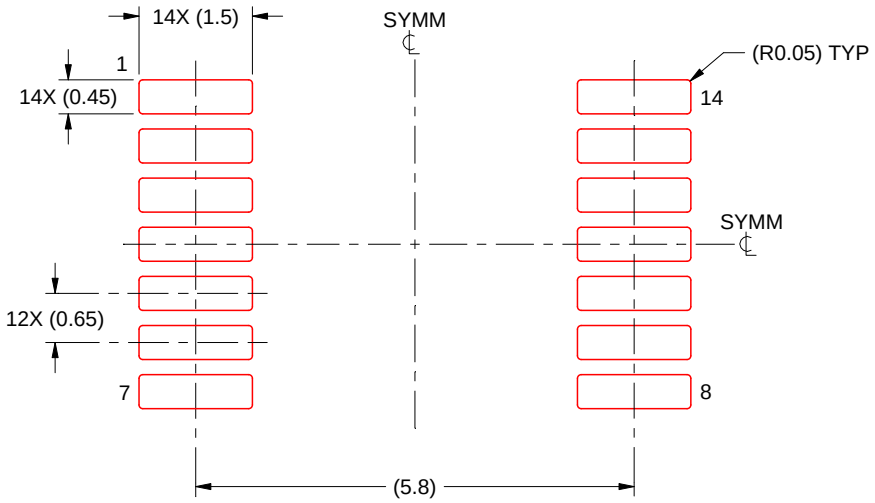

SOLDER PASTE EXAMPLE
BASED ON 0.125 mm THICK STENCIL
SCALE: 10X

4220202/B 12/2023

NOTES: (continued)

8. Laser cutting apertures with trapezoidal walls and rounded corners may offer better paste release. IPC-7525 may have alternate design recommendations.
9. Board assembly site may have different recommendations for stencil design.

重要なお知らせと免責事項

TI は、技術データと信頼性データ (データシートを含みます)、設計リソース (リファレンス デザインを含みます)、アプリケーションや設計に関する各種アドバイス、Web ツール、安全性情報、その他のリソースを、欠陥が存在する可能性のある「現状のまま」提供しており、商品性および特定目的に対する適合性の黙示保証、第三者の知的財産権の非侵害保証を含むいかなる保証も、明示的または黙示的にかかわらず拒否します。

これらのリソースは、TI 製品を使用する設計の経験を積んだ開発者への提供を意図したものです。(1) お客様のアプリケーションに適した TI 製品の選定、(2) お客様のアプリケーションの設計、検証、試験、(3) お客様のアプリケーションに該当する各種規格や、その他のあらゆる安全性、セキュリティ、規制、または他の要件への確実な適合に関する責任を、お客様のみが単独で負うものとします。

上記の各種リソースは、予告なく変更される可能性があります。これらのリソースは、リソースで説明されている TI 製品を使用するアプリケーションの開発の目的でのみ、TI はその使用をお客様に許諾します。これらのリソースに関して、他の目的で複製することや掲載することは禁止されています。TI や第三者の知的財産権のライセンスが付与されている訳ではありません。お客様は、これらのリソースを自身で使用した結果発生するあらゆる申し立て、損害、費用、損失、責任について、TI およびその代理人を完全に補償するものとし、TI は一切の責任を拒否します。

TI の製品は、 TI の販売条件 、 TI の総合的な品質ガイドライン 、 ti.com または TI 製品などに関連して提供される他の適用条件に従い提供されます。TI がこれらのリソースを提供することは、適用される TI の保証または他の保証の放棄の拡大や変更を意味するものではありません。 TI がカスタム、またはカスタマー仕様として明示的に指定していない限り、TI の製品は標準的なカタログに掲載される汎用機器です。

お客様がいかなる追加条項または代替条項を提案する場合も、TI はそれらに異議を唱え、拒否します。

Copyright © 2026, Texas Instruments Incorporated

最終更新日：2025 年 10 月