3V～5.5V、1 チャネル RS-232 1Mbit/s ライン・ドライバ / レシーバ、±15kV IEC ESD 保護機能搭載

1 特長

- RS-232 ピンの ESD 保護
  - ±15kV 人体モデル (HBM)
  - ±8kV IEC 61000-4-2 接触放電
  - ±15kV IEC 61000-4-2 エアギャップ放電
- 3V～5.5V の V_{CC} 電源で動作
- 最大 1Mbit/s で動作
- 低スタンバイ電流 ...標準値 1μA
- 外付けコンデンサ ...4 × 0.1μF
- 3.3V 電源で 5V ロジック入力を受容
- ±15kV (人体モデル (HBM)) を超える RS-232 バス・ピン ESD 保護
- 自動パワー・ダウン機能により、ドライバを自動的にディスエーブルすることで電力を節約

2 アプリケーション

- 産業用 PC
- 有線ネットワーク
- データ・センターおよびエンタープライズ・コンピューティング
- バッテリ駆動システム
- PDA
- ノートブック PC
- ノート PC
- パームトップ PC
- ハンドヘルド機器

3 概要

SN65C3221E と SN75C3221E は 1 つのライン・ドライバ、1 つのライン・レシーバ、1 つのデュアル・チャージ・ポンプ回路で構成されており、±15kV のピン間 (シリアル・ポート接続ピン、GND を含む) IEC ESD 保護機能を備えています。これらのデバイスは、非同期通信コントローラとシリアルポート・コネクタの間の電気的インターフェイスとして機能します。チャージ・ポンプと 4 つの小さな外付けコンデンサにより、3V～5.5V の単一電源で動作できます。

これらのデバイスは最大 1Mbit/s のデータ信号速度、24V/μs～150V/μs のドライバ出力スルーレートで動作します。

シリアル・ポートが使われていない際のパワー・マネージメントを柔軟に制御できます。FORCEON が LOW かつ $\overline{\text{FORCEOFF}}$ が HIGH の場合、自動パワー・ダウン機能が動作します。この動作モード中、デバイスがレシーバ入力で有効な RS-232 信号を検出しない場合、ドライバ出力はディスエーブルになります。$\overline{\text{FORCEOFF}}$ を LOW に設定しかつ $\overline{\text{EN}}$ を HIGH に設定すると、ドライバとレシーバはどちらもシャットダウンされ、消費電流は 1μA に減少します。シリアル・ポートを切り離した場合、またはペリフェラル・ドライバをオフにした場合、自動パワー・ダウン状態になります。FORCEON と $\overline{\text{FORCEOFF}}$ を HIGH にすると、自動パワー・ダウンを無効にできます。自動パワー・ダウンが有効な場合、レシーバの入力に有効な信号が印加されると、デバイスは自動的にアクティブになります。$\overline{\text{INVALID}}$ 出力は、レシーバの入力に RS-232 信号が存在するかどうかをユーザーに通知します。$\overline{\text{INVALID}}$ は、レシーバの入力電圧が 2.7V を上回っている場合、–2.7V を下回っている場合、–0.3V と 0.3V の間にあった期間が 30μs 未満である場合のいずれかの場合、HIGH (有効データ) になります。$\overline{\text{INVALID}}$ は、レシーバの入力電圧が 30μs を超える期間 –0.3V と 0.3V の間にある場合、LOW (無効データ) になります。レシーバの入力レベルについては、図 8-5 を参照してください。

製品情報

部品番号	パッケージ(1)	本体サイズ (公称)
SNx5C3221E	SSOP (DB) 16	6.20mm × 5.30mm
	TSSOP (DW) 16	10.3mm × 7.50mm

(1) 利用可能なすべてのパッケージについては、このデータシートの末尾にある注文情報を参照してください。

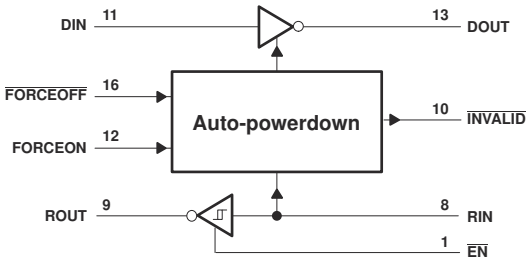

論理図 (正論理)

英語版の TI 製品についての情報を翻訳したこの資料は、製品の概要を確認する目的で便宜的に提供しているものです。該当する正式な英語版の最新情報は、www.ti.com で閲覧でき、その内容が常に優先されます。TI では翻訳の正確性および妥当性につきましては一切保証いたしません。実際の設計などの前には、必ず最新版の英語版をご参照くださいますようお願いいたします。

Table of Contents

1 特長 ... 1
2 アプリケーション ... 1
3 概要 ... 1
4 Revision History ... 2
5 Device Comparison Table ... 3
6 Pin Configuration and Functions ... 4
7 Specifications ... 5
7.1 Absolute Maximum Ratings ... 5
7.2 ESD Ratings ... 5
7.3 ESD Ratings - IEC Specifications ... 5
7.4 Recommended Operating Conditions ... 6
7.5 Thermal Information ... 6
7.6 Electrical Characteristics ... 7
7.7 Driver Section: Electrical Characteristics ... 7
7.8 Switching Characteristics: Driver ... 7
7.9 Receiver Section: Electrical Characteristics ... 8
7.10 Switching Characteristics: Receiver ... 8
7.11 Auto-powerdown Section: Electrical Characteristics ... 9
7.12 Switching Characteristics: Auto-powerdown ... 9
8 Parameter Measurement Information ... 10
9 Detailed Description ... 13
9.1 Device Functional Modes ... 13
10 Application and Implementation ... 14
10.1 Application Information ... 14
11 Device and Documentation Support ... 15
11.1 Receiving Notification of Documentation Updates ... 15
11.2 サポート・リソース ... 15
11.3 Trademarks ... 15
11.4 Electrostatic Discharge Caution ... 15
11.5 Glossary ... 15
12 Mechanical, Packaging, and Orderable Information ... 15

4 Revision History

資料番号末尾の英字は改訂を表しています。その改訂履歴は英語版に準じています。

Changes from Revision B (April 2009) to Revision C (July 2021) — **Page**

- *「アプリケーション」*の一覧を変更 ... 1
- 「注文情報」表を削除 ... 1
- 製品情報の表を追加 ... 1
- Added the *Pin Configuration and Functions* ... 4
- Removed the thermal information from *Absolute Maximum Ratings*table and moved the thermal information to its own table ... 5
- Added a table note for PW package of SN65C3221E regarding the minimum capacitance in *ESD Ratings - IEC Specifications* table ... 5
- Changed thermal information for PW package of SN65C3221E. Added additional thermal information for other packages ... 6
- Added the *Detailed Desctipiton* section ... 13

Copyright © 2021 Texas Instruments Incorporated

5 Device Comparison Table

表 5-1. 1-Mbit/s RS-232 Parts

PART NO.	TEMPERATURE RANGE	DRIVER NO.	RECEIVER NO.	ESD	SUPPLY V_{CC} (V)	FEATURE	PIN/PACKAGE
SN65C3221E	–40°C to 85°C	1	1	±15-kV Air-Gap, ±8-kV Contact, ±15-kV HBM	3.3 or 5	Auto powerdown	16-pin SOIC, SSOP, TSSOP
SN65C3232E		2	2	±15-kV Air-Gap, ±8-kV Contact, ±15-kV HBM	3.3 or 5	Low pin count	16-pin SOIC, SSOP, TSSOP
MAX3227I		1	1	±8-kV Air-Gap, ±8-k V Contact, ±15-kV HBM	3.3 or 5	Auto powerdown plus, ready signal	16-pin SSOP
SN65C3221		1	1	±15-kV HBM	3.3 or 5	Auto powerdown	16-pin SOIC, SSOP, TSSOP
SN65C3223		2	2	±15-kV HBM	3.3 or 5	Auto powerdown, enable signal	20-pin SOIC, SSOP, TSSOP
SN65C3222		2	2	±15-kV HBM	3.3 or 5	Enable, powerdown signal	20-pin SOIC, SSOP, TSSOP
SN65C3232		2	2	±15-kV HBM	3.3 or 5	Low pin count	16-pin SOIC, SSOP, TSSOP
SN65C3238		5	3	±15-kV HBM	3.3 or 5	Auto powerdown plus	28-pin SOIC, SSOP, TSSOP
SN65C3243		3	5	±15-kV HBM	3.3 or 5	Auto powerdown	28-pin SOIC, SSOP, TSSOP
SN75C3221E	0°C to 70°C	1	1	±15-kV Air-Gap, ±8-kV Contact, ±15-kV HBM	3.3 or 5	Auto powerdown	16-pin SOIC, SSOP, TSSOP
SN75C3232E		2	2	±15-kV Air-Gap, ±8-kV Contact, ±15-kV HBM	3.3 or 5	Low pin count	16-pin SOIC, SSOP, TSSOP
MAX3227C		1	1	±8-kV Air-Gap, ±8-kV Contact, ±15-kV HBM	3.3 or 5	Auto powerdown plus, ready signal	16-pin SSOP
SN75C3221		1	1	±15-kV HBM	3.3 or 5	Auto powerdown	16-pin SOIC, SSOP, TSSOP
SN75C3223		2	2	±15-kV HBM	3.5 or 5	Auto powerdown, enable signal	20-pin SOIC, SSOP, TSSOP
SN75C3222		2	2	±15-kV HBM	3.3 or 5	Enable, powerdown signal	20-pin SOIC, SSOP, TSSOP
SN75C3232		2	2	±15-kV HBM	3.3 or 5	Low pin count	16-pin SOIC, SSOP, TSSOP
SN75C3238		5	3	±15-kV HBM	3.3 or 5	Auto powerdown plus	28-pin SOIC, SSOP, TSSOP
SN75C3243		3	5	±15-kV HBM	3.3 or 5	Auto powerdown	28-pin SOIC, SSOP, TSSOP

Copyright © 2021 Texas Instruments Incorporated

6 Pin Configuration and Functions

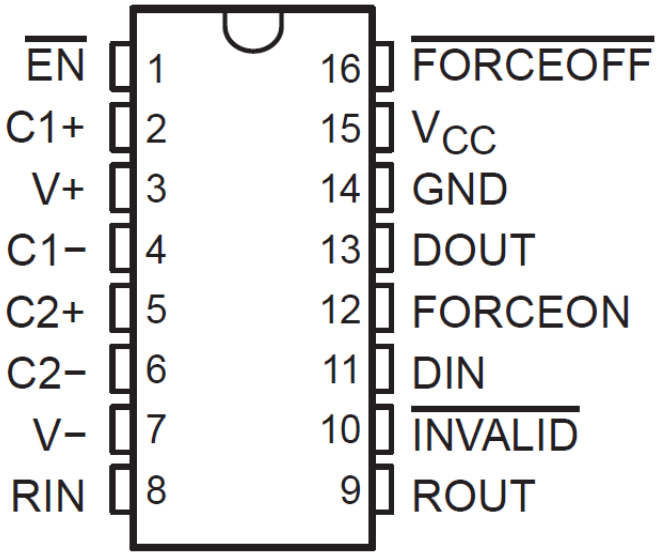

図 6-1. DB or PW Package
Top View

表 6-1. Pin Configurations

PIN			DESCRIPTION
NAME	NO	I/O	
$\overline{EN}$	1	I	Low input enables receiver ROUT output. High input sets ROUT to high impedance.
C1+	2	—	Positive terminals of the voltage-doubler charge-pump capacitors
V+	3	O	5.5-V supply generated by the charge pump
C1–	4	—	Negative terminals of the voltage-doubler charge-pump capacitors
C2+	5	—	Positive terminals of the voltage-doubler charge-pump capacitors
C2–	6	—	Negative terminals of the voltage-doubler charge-pump capacitors
V–	7	O	–5.5-V supply generated by the charge pump
RIN	8	I	RS-232 receiver input
ROUT	9	O	Receiver output
$\overline{INVALID}$	10	O	Invalid output pin. Output low when all RIN inputs are unpowered.
DIN	11	I	Driver input
FORCEON	12	I	Automatic power-down control input
DOUT	13	O	RS-232 driver output
GND	14	—	Ground
V_{CC}	15	—	3-V to 5.5-V supply voltage
$\overline{FORCEOFF}$	16	I	Automatic power-down control input

Copyright © 2021 Texas Instruments Incorporated

7 Specifications

7.1 Absolute Maximum Ratings

over operating free-air temperature range (unless otherwise noted) [1]

			MIN	MAX	UNIT
V_{CC}	Supply voltage range[2]		–0.3	6	V
V+	Positive output supply voltage range[2]		–0.3	7	V
V–	Negative output supply voltage range[2]		0.3	–7	V
V+ – V–	Supply voltage difference[2]			13	V
V_I	Input voltage range	Driver ($\overline{FORCEOFF}$, FORCEON, $\overline{EN}$)	–0.3	6	V
		Receiver	–25	25	
V_O	Output voltage range	Driver	–13.2	13.2	V
		Receiver ($\overline{INVALID}$)	–0.3	V_{CC} + 0.3	
T_J	Operating virtual junction temperature			150	°C
T_{stg}	Storage temperature range		–65	150	°C

(1) Stresses beyond those listed under "absolute maximum ratings" may cause permanent damage to the device. These are stress ratings only, and functional operation of the device at these or any other conditions beyond those indicated under "recommended operating conditions" is not implied. Exposure to absolute-maximum-rated conditions for extended periods may affect device reliability.
(2) All voltages are with respect to network GND.

7.2 ESD Ratings

				VALUE	UNIT
$V_{(ESD)}$	Electrostatic discharge	Human-body model (HBM), per ANSI/ESDA/JEDEC JS-001[1]	DOUT, RIN	±15000	V
			All other pins	±3000	
		Charged-device model (CDM), per JEDEC specification JESD22-C101[2]		±1500	

(1) JEDEC document JEP155 states that 500-V HBM allows safe manufacturing with a standard ESD control process.
(2) JEDEC document JEP157 states that 250-V CDM allows safe manufacturing with a standard ESD control process.

7.3 ESD Ratings - IEC Specifications

				VALUE	UNIT
$V_{(ESD)}$	Electrostatic discharge	IEC 61000-4-2 Contact Discharge [1]	RIN and DOUT pins only	±8000	V
		IEC 61000-4-2 Air Discharge [1]	RIN and DOUT pins only	±15000	

(1) For the PW package of SN65C3221E only, a minimum of 1-µF capacitor is required between VCC and GND to meet the specified IEC-ESD level.

Copyright © 2021 Texas Instruments Incorporated

7.4 Recommended Operating Conditions

See 図 10-1. see (1)

				MIN	NOM	MAX	UNIT
	Supply voltage		V_{CC} = 3.3 V	3	3.3	3.6	V
			V_{CC} = 5 V	4.5	5	5.5	
V_{IH}	Driver and control high-level input voltage	DIN, $\overline{FORCEOFF}$, FORCEON, $\overline{EN}$	V_{CC} = 3.3 V	2			V
			V_{CC} = 5 V	2.4			
V_{IL}	Driver and control low-level input voltage	DIN, $\overline{FORCEOFF}$, FORCEON, $\overline{EN}$				0.8	V
V_I	Driver and control input voltage	DIN, $\overline{FORCEOFF}$, FORCEON		0		5.5	V
V_I	Receiver input voltage			–25		25	V
T_A	Operating free-air temperature		SN65C3221E	–40		85	°C
			SN75C3221E	0		70	

(1) Test conditions are C1–C4 = 0.1 µF at V_{CC} = 3.3 V ± 0.3 V; C1 = 0.047 µF, C2–C4 = 0.33 µF at V_{CC} = 5 V ± 0.5 V.

7.5 Thermal Information

THERMAL METRIC[1]		SN65C3221E		SN75C3221E		UNIT
		PW (TSSOP)	DB (SSOP)	PW (TSSOP)	DB (SSOP)	
		16 PINS	16 PINS	16 PINS	16 PINS	
$R_{\theta JA}$	Junction-to-ambient thermal resistance	110.9	82	108	82	°C/W
$R_{\theta JC(top)}$	Junction-to-case (top) thermal resistance	41.7	45.7	41.1	45.7	°C/W
$R_{\theta JB}$	Junction-to-board thermal resistance	57.2	44.4	51.4	44.4	°C/W
ψ_{JT}	Junction-to-top characterization parameter	4.2	11.0	3.9	11.0	°C/W
ψ_{JB}	Junction-to-board characterization parameter	56.6	43.8	50.9	43.8	°C/W

Copyright © 2021 Texas Instruments Incorporated

7.6 Electrical Characteristics

over recommended ranges of supply voltage and operating free-air temperature (unless otherwise noted) (see 図 10-1)

PARAMETER			TEST CONDITIONS(1)	MIN	TYP(2)	MAX	UNIT
I_I	Input leakage current	$\overline{\text{FORCEOFF}}$, FORCEON, $\overline{\text{EN}}$			±0.01	±1	μA
I_{CC}	Supply current (T_A = 25°C)	Auto-powerdown disabled	No load, $\overline{\text{FORCEOFF}}$ and FORCEON at V_{CC}		0.3	1	mA
		Powered off	No load, $\overline{\text{FORCEOFF}}$ at GND		1	10	μA
		Auto-powerdown enabled	No load, $\overline{\text{FORCEOFF}}$ at V_{CC}, FORCEON at GND, All RIN are open or grounded		1	10	

(1) Test conditions are C1–C4 = 0.1 μF at V_{CC} = 3.3 V ± 0.3 V; C1 = 0.047 μF, C2–C4 = 0.33 μF at V_{CC} = 5 V ± 0.5 V.
(2) All typical values are at V_{CC} = 3.3 V or V_{CC} = 5 V, and T_A = 25°C.

7.7 Driver Section: Electrical Characteristics

over recommended ranges of supply voltage and operating free-air temperature (unless otherwise noted) (see 図 10-1)

PARAMETER		TEST CONDITIONS(1)			MIN	TYP(2)	MAX	UNIT
V_{OH}	High-level output voltage	DOUT at R_L = 3 kΩ to GND,	DIN = GND		5	5.4		V
V_{OL}	Low-level output voltage	DOUT at R_L = 3 kΩ to GND,	DIN = V_{CC}		–5	–5.4		V
I_{IH}	High-level input current	V_I = V_{CC}				±0.01	±1	μA
I_{IL}	Low-level input current	V_I at GND				±0.01	±1	μA
I_{OS}	Short-circuit output current(3)	V_{CC} = 3.6 V,	V_O = 0 V			±35	±60	mA
		V_{CC} = 5.5 V,	V_O = 0 V			±35	±90	
r_o	Output resistance	V_{CC}, V+, and V– = 0 V,	V_O = ±2 V		300	10M		Ω
I_{off}	Output leakage current	$\overline{\text{FORCEOFF}}$ = GND	V_O = ±12 V,	V_{CC} = 3 V to 3.6 V			±25	μA
			V_O = ±10 V,	V_{CC} = 4.5 V to 5.5 V			±25	

(1) Test conditions are C1–C4 = 0.1 μF at V_{CC} = 3.3 V ± 0.3 V; C1 = 0.047 μF, C2–C4 = 0.33 μF at V_{CC} = 5 V ± 0.5 V.
(2) All typical values are at V_{CC} = 3.3 V or V_{CC} = 5 V, and T_A = 25°C.
(3) Short-circuit durations should be controlled to prevent exceeding the device absolute power-dissipation ratings, and not more than one output should be shorted at a time.

7.8 Switching Characteristics: Driver

over recommended ranges of supply voltage and operating free-air temperature (unless otherwise noted) (see 図 10-1)

PARAMETER		TEST CONDITIONS(1)			MIN	TYP(2)	MAX	UNIT
Maximum data rate (see 図 8-1)		R_L = 3 kΩ	C_L = 1000 pF		250			kbit/s
			C_L = 250 pF,	V_{CC} = 3 V to 4.5 V	1000			
			C_L = 1000 pF,	V_{CC} = 4.5 V to 5.5 V	1000			
$t_{sk(p)}$	Pulse skew(3)	C_L = 150 pF to 2500 pF,	R_L = 3 kΩ to 7 kΩ,	See 図 8-2		100		ns
SR(tr)	Slew rate, transition region (see 図 8-1)	V_{CC} = 3.3 V,	R_L = 3 kΩ to 7 kΩ,	C_L = 150 pF to 1000 pF	18		150	V/μs

(1) Test conditions are C1–C4 = 0.1 μF at V_{CC} = 3.3 V ± 0.3 V; C1 = 0.047 μF, C2–C4 = 0.33 μF at V_{CC} = 5 V ± 0.5 V.
(2) All typical values are at V_{CC} = 3.3 V or V_{CC} = 5 V, and T_A = 25°C.
(3) Pulse skew is defined as $|t_{PLH} - t_{PHL}|$ of each channel of the same device.

Copyright © 2021 Texas Instruments Incorporated

7.9 Receiver Section: Electrical Characteristics

over recommended ranges of supply voltage and operating free-air temperature (unless otherwise noted) (see 図 10-1)

PARAMETER		TEST CONDITIONS(1)	MIN	TYP(2)	MAX	UNIT
V_{OH}	High-level output voltage	I_{OH} = –1 mA	V_{CC} – 0.6 V	V_{CC} – 0.1 V		V
V_{OL}	Low-level output voltage	I_{OL} = 1.6 mA			0.4	V
V_{IT+}	Positive-going input threshold voltage	V_{CC} = 3.3 V		1.6	2.4	V
		V_{CC} = 5 V		1.9	2.4	
V_{IT-}	Negative-going input threshold voltage	V_{CC} = 3.3 V	0.6	1.1		V
		V_{CC} = 5 V	0.8	1.4		
V_{hys}	Input hysteresis (V_{IT+} – V_{IT-})			0.5		V
I_{off}	Output leakage current	$\overline{\text{FORCEOFF}}$ = 0 V		±0.05	±10	μA
r_i	Input resistance	V_I = ±3 V to ±25 V	3	5	7	kΩ

(1) Test conditions are C1–C4 = 0.1 μF at V_{CC} = 3.3 V ± 0.3 V; C1 = 0.047 μF, C2–C4 = 0.33 μF at V_{CC} = 5 V ± 0.5 V.
(2) All typical values are at V_{CC} = 3.3 V or V_{CC} = 5 V, and T_A = 25°C.

7.10 Switching Characteristics: Receiver

over recommended ranges of supply voltage and operating free-air temperature (unless otherwise noted) (see 図 10-1)

PARAMETER		TEST CONDITIONS(1)	TYP(2)	UNIT
t_{PLH}	Propagation delay time, low- to high-level output	C_L = 150 pF, See 図 8-3	150	ns
t_{PHL}	Propagation delay time, high- to low-level output	C_L = 150 pF, See 図 8-3	150	ns
t_{en}	Output enable time	C_L = 150 pF, R_L = 3 kΩ, See 図 8-4	200	ns
t_{dis}	Output disable time	C_L = 150 pF, R_L = 3 kΩ, See 図 8-4	200	ns
$t_{sk(p)}$	Pulse skew(3)	See 図 8-3	50	ns

(1) Test conditions are C1–C4 = 0.1 μF at V_{CC} = 3.3 V ± 0.3 V; C1 = 0.047 μF, C2–C4 = 0.33 μF at V_{CC} = 5 V ± 0.5 V.
(2) All typical values are at V_{CC} = 3.3 V or V_{CC} = 5 V, and T_A = 25°C.
(3) Pulse skew is defined as $|t_{PLH} - t_{PHL}|$ of each channel of the same device.

Copyright © 2021 Texas Instruments Incorporated

7.11 Auto-powerdown Section: Electrical Characteristics

over recommended ranges of supply voltage and operating free-air temperature (unless otherwise noted) (see 図 8-5)

PARAMETER		TEST CONDITIONS	MIN	MAX	UNIT
$V_{T+(valid)}$	Receiver input threshold for $\overline{INVALID}$ high-level output voltage	FORCEON = GND, $\overline{FORCEOFF}$ = V_{CC}		2.7	V
$V_{T-(valid)}$	Receiver input threshold for $\overline{INVALID}$ high-level output voltage	FORCEON = GND, $\overline{FORCEOFF}$ = V_{CC}	–2.7		V
$V_{T(invalid)}$	Receiver input threshold for $\overline{INVALID}$ low-level output voltage	FORCEON = GND, $\overline{FORCEOFF}$ = V_{CC}	–0.3	0.3	V
V_{OH}	$\overline{INVALID}$ high-level output voltage	I_{OH} = –1 mA, FORCEON = GND, $\overline{FORCEOFF}$ = V_{CC}	V_{CC} – 0.6		V
V_{OL}	$\overline{INVALID}$ low-level output voltage	I_{OL} = 1.6 mA, FORCEON = GND, $\overline{FORCEOFF}$ = V_{CC}		0.4	V

7.12 Switching Characteristics: Auto-powerdown

over recommended ranges of supply voltage and operating free-air temperature (unless otherwise noted) (see 図 8-5)

PARAMETER		TYP(1)	UNIT
t_{valid}	Propagation delay time, low- to high-level output	1	µs
$t_{invalid}$	Propagation delay time, high- to low-level output	30	µs
t_{en}	Supply enable time	100	µs

(1) All typical values are at V_{CC} = 3.3 V or V_{CC} = 5 V, and T_A = 25°C.

8 Parameter Measurement Information

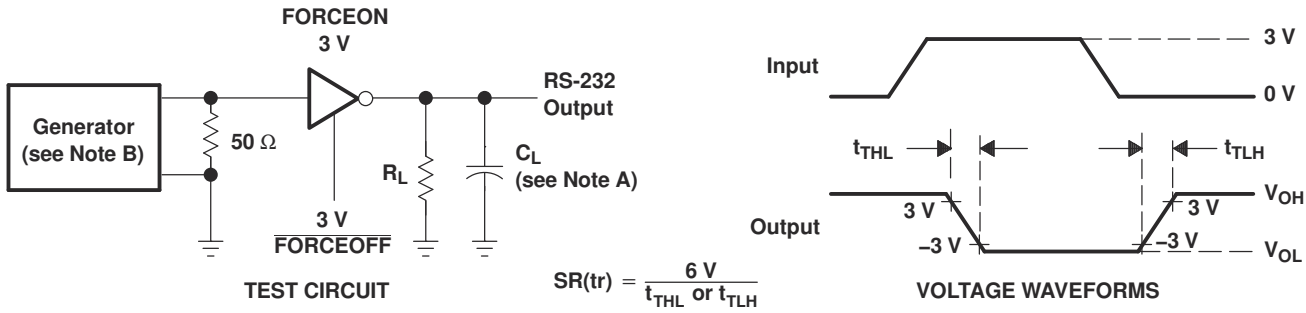

NOTES: A. C_L includes probe and jig capacitance.
B. The pulse generator has the following characteristics: PRR = 250 kbit/s, Z_O = 50 Ω, 50% duty cycle, $t_r \leq 10$ ns, $t_f \leq 10$ ns.

図 8-1. Driver Slew Rate

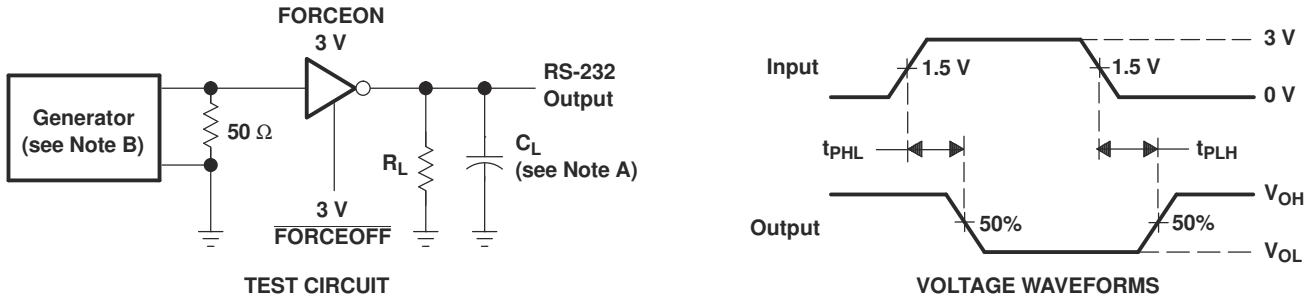

NOTES: A. C_L includes probe and jig capacitance.
B. The pulse generator has the following characteristics: PRR = 250 kbit/s, Z_O = 50 Ω, 50% duty cycle, $t_r \leq 10$ ns, $t_f \leq 10$ ns.

図 8-2. Driver Pulse Skew

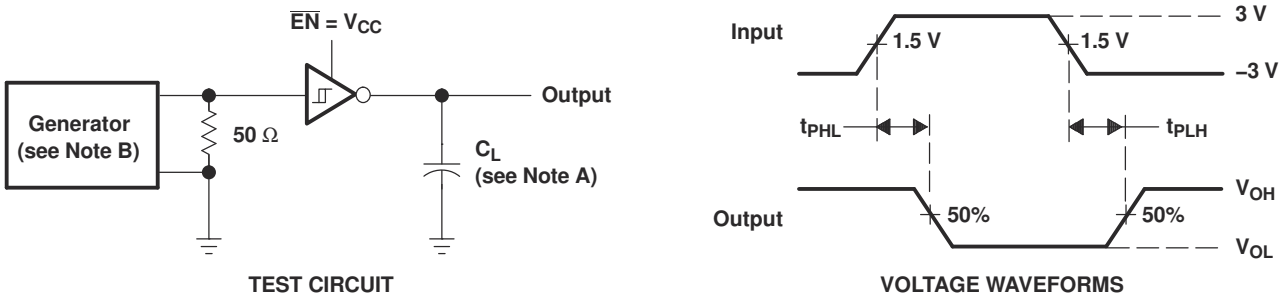

NOTES: A. C_L includes probe and jig capacitance.
B. The pulse generator has the following characteristics: Z_O = 50 Ω, 50% duty cycle, $t_r \leq 10$ ns, $t_f \leq 10$ ns.

図 8-3. Receiver Propagation Delay Times

Copyright © 2021 Texas Instruments Incorporated

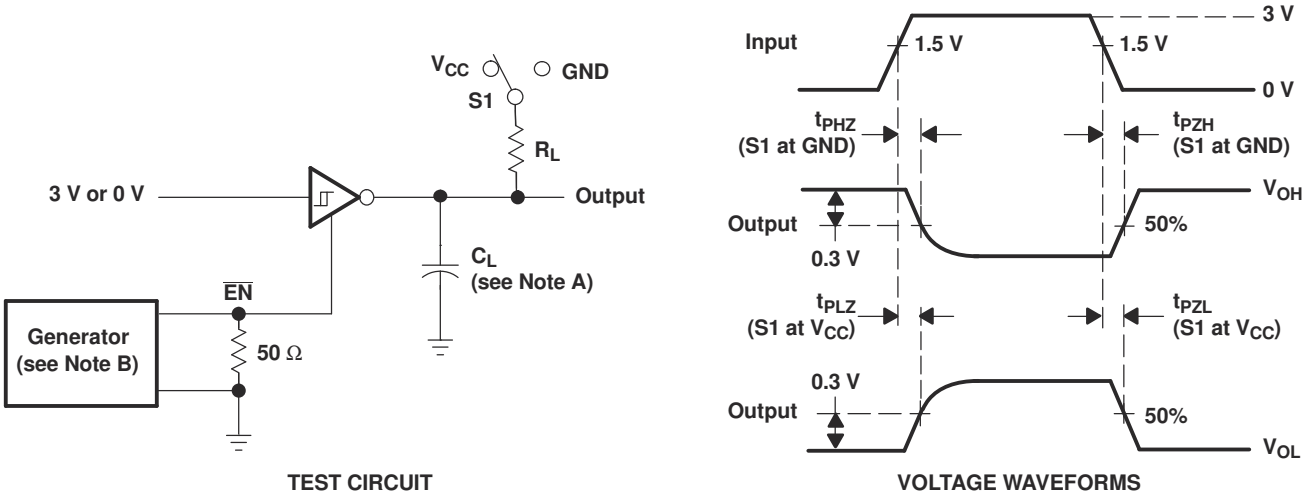

NOTES: A. C_L includes probe and jig capacitance.
B. The pulse generator has the following characteristics: Z_O = 50 Ω, 50% duty cycle, $t_r \leq 10$ ns, $t_f \leq 10$ ns.
C. t_{PLZ} and t_{PHZ} are the same as t_{dis}.
D. t_{PZL} and t_{PZH} are the same as t_{en}.

図 8-4. Receiver Enable and Disable Times

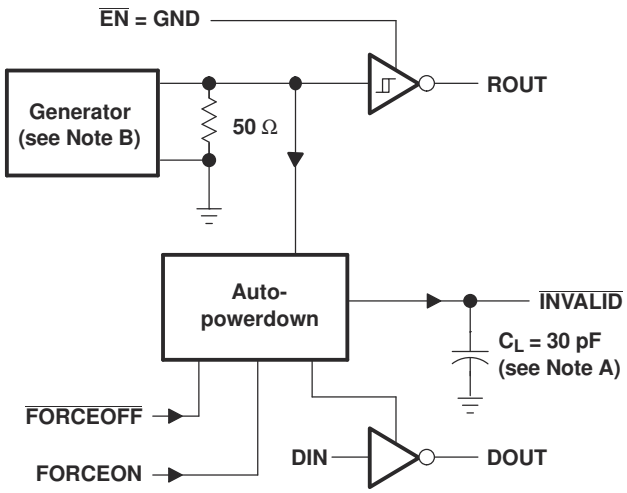

TEST CIRCUIT

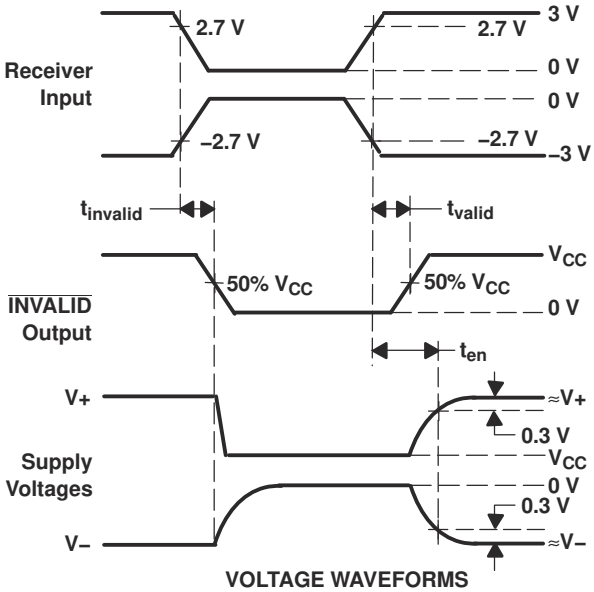

VOLTAGE WAVEFORMS

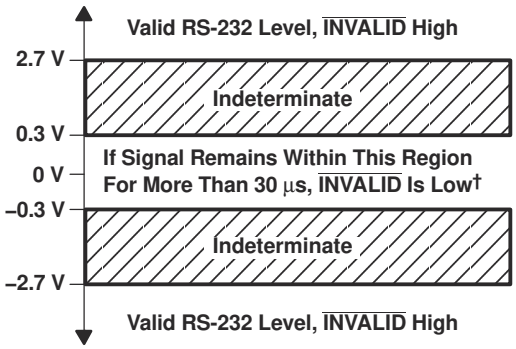

† Auto-powerdown disables drivers and reduces supply current to 1 µA.

NOTES: A. C_L includes probe and jig capacitance.
B. The pulse generator has the following characteristics: PRR = 5 kbit/s, Z_O = 50 Ω, 50% duty cycle, $t_r \leq 10$ ns, $t_f \leq 10$ ns.

図 8-5. $\overline{\text{INVALID}}$ Propagation Delay Times and Driver Enabling Time

Copyright © 2021 Texas Instruments Incorporated

9 Detailed Description

9.1 Device Functional Modes

表 9-1. Each Driver

INPUTS[1]				OUTPUT DOUT	DRIVER STATUS
DIN	FORCEON	$\overline{\text{FORCEOFF}}$	VALID RIN RS-232 LEVEL		
X	X	L	X	Z	Powered off
L	H	H	X	H	Normal operation with auto-powerdown disabled
H	H	H	X	L	
L	L	H	Yes	H	Normal operation with auto-powerdown enabled
H	L	H	Yes	L	
L	L	H	No	Z	Powered off by auto-powerdown feature
H	L	H	No	Z	

(1) H = high level, L = low level, X = irrelevant, Z = high impedance

表 9-2. Each Receiver

INPUTS[1]			OUTPUT ROUT
RIN	$\overline{\text{EN}}$	VALID RIN RS-232 LEVEL	
L	L	X	H
H	L	X	L
X	H	X	Z
Open	L	No	H

(1) H = high level, L = low level, X = irrelevant, Z = high impedance (off), Open = disconnected input or connected driver off

10 Application and Implementation

Note

Information in the following applications sections is not part of the TI component specification, and TI does not warrant its accuracy or completeness. TI's customers are responsible for determining suitability of components for their purposes, as well as validating and testing their design implementation to confirm system functionality.

10.1 Application Information

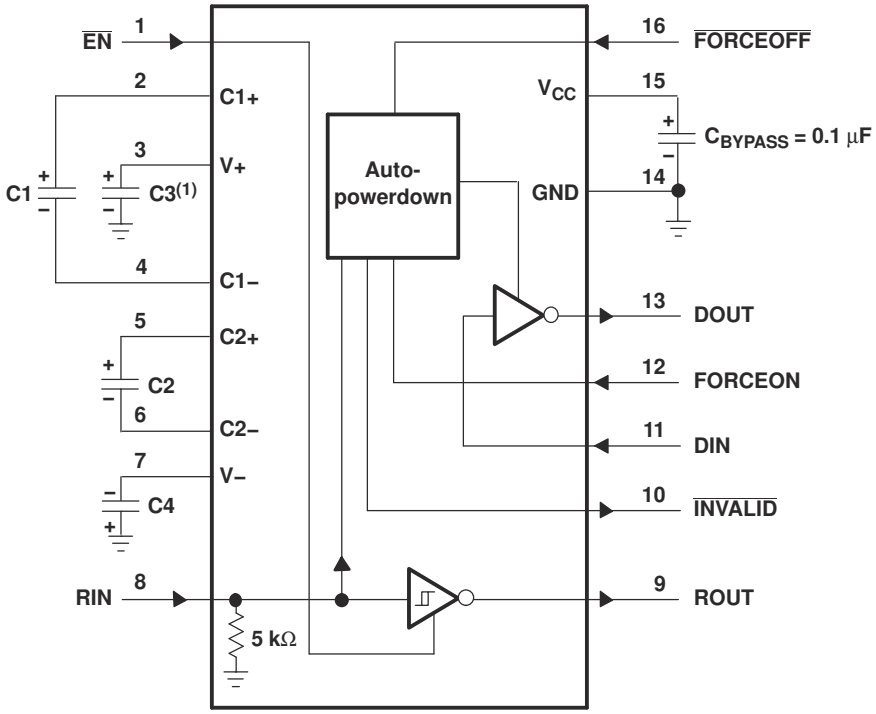

(1) C3 can be connected to V_{CC} or GND.
NOTES: A. Resistor values shown are nominal.
B. Nonpolarized ceramic capacitors are acceptable. If polarized tantalum or electrolytic capacitors are used, they should be connected as shown.

V_{CC} vs CAPACITOR VALUES

V_{CC}	C1	C2, C3, and C4
3.3 V ± 0.3 V	0.1 µF	0.1 µF
5 V ± 0.5 V	0.047 µF	0.33 µF
3 V to 5.5 V	0.1 µF	0.47 µF

図 10-1. Typical Operating Circuit and Capacitor Values

Copyright © 2021 Texas Instruments Incorporated

11 Device and Documentation Support

TI offers an extensive line of development tools. Tools and software to evaluate the performance of the device, generate code, and develop solutions are listed below.

11.1 Receiving Notification of Documentation Updates

To receive notification of documentation updates, navigate to the device product folder on ti.com. Click on *Subscribe to updates* to register and receive a weekly digest of any product information that has changed. For change details, review the revision history included in any revised document.

11.2 サポート・リソース

TI E2E™ サポート・フォーラムは、エンジニアが検証済みの回答と設計に関するヒントをエキスパートから迅速かつ直接得ることができる場所です。既存の回答を検索したり、独自の質問をしたりすることで、設計で必要な支援を迅速に得ることができます。

リンクされているコンテンツは、該当する貢献者により、現状のまま提供されるものです。これらは TI の仕様を構成するものではなく、必ずしも TI の見解を反映したものではありません。TI の使用条件を参照してください。

11.3 Trademarks

TI E2E™ is a trademark of Texas Instruments.
すべての商標は、それぞれの所有者に帰属します。

11.4 Electrostatic Discharge Caution

This integrated circuit can be damaged by ESD. Texas Instruments recommends that all integrated circuits be handled with appropriate precautions. Failure to observe proper handling and installation procedures can cause damage.

ESD damage can range from subtle performance degradation to complete device failure. Precision integrated circuits may be more susceptible to damage because very small parametric changes could cause the device not to meet its published specifications.

11.5 Glossary

TI Glossary	This glossary lists and explains terms, acronyms, and definitions.

12 Mechanical, Packaging, and Orderable Information

The following pages include mechanical, packaging, and orderable information. This information is the most current data available for the designated devices. This data is subject to change without notice and revision of this document. For browser-based versions of this data sheet, refer to the left-hand navigation.

PACKAGING INFORMATION

Orderable part number	Status (1)	Material type (2)	Package | Pins	Package qty | Carrier	RoHS (3)	Lead finish/ Ball material (4)	MSL rating/ Peak reflow (5)	Op temp (°C)	Part marking (6)
SN65C3221EDB	Obsolete	Production	SSOP (DB) | 16	-	-	Call TI	Call TI	-40 to 85	MU221E
SN65C3221EDBR	Active	Production	SSOP (DB) | 16	2000 | LARGE T&R	Yes	NIPDAU	Level-1-260C-UNLIM	-40 to 85	MU221E
SN65C3221EDBR.A	Active	Production	SSOP (DB) | 16	2000 | LARGE T&R	Yes	NIPDAU	Level-1-260C-UNLIM	-40 to 85	MU221E
SN65C3221EDBRG4	Active	Production	SSOP (DB) | 16	2000 | LARGE T&R	Yes	NIPDAU	Level-1-260C-UNLIM	-40 to 85	MU221E
SN65C3221EDBRG4.A	Active	Production	SSOP (DB) | 16	2000 | LARGE T&R	Yes	NIPDAU	Level-1-260C-UNLIM	-40 to 85	MU221E
SN65C3221EPWR	Active	Production	TSSOP (PW) | 16	2000 | LARGE T&R	Yes	NIPDAU | SN	Level-1-260C-UNLIM	-40 to 85	MU221E
SN65C3221EPWR.A	Active	Production	TSSOP (PW) | 16	2000 | LARGE T&R	Yes	NIPDAU	Level-1-260C-UNLIM	-40 to 85	MU221E
SN65C3221EPWRG4	Active	Production	TSSOP (PW) | 16	2000 | LARGE T&R	Yes	NIPDAU	Level-1-260C-UNLIM	-40 to 85	MU221E
SN65C3221EPWRG4.A	Active	Production	TSSOP (PW) | 16	2000 | LARGE T&R	Yes	NIPDAU	Level-1-260C-UNLIM	-40 to 85	MU221E
SN75C3221EDB	Obsolete	Production	SSOP (DB) | 16	-	-	Call TI	Call TI	0 to 70	MY221E
SN75C3221EDBR	Obsolete	Production	SSOP (DB) | 16	-	-	Call TI	Call TI	0 to 70	MY221E

(1) **Status:** For more details on status, see our product life cycle.

(2) **Material type:** When designated, preproduction parts are prototypes/experimental devices, and are not yet approved or released for full production. Testing and final process, including without limitation quality assurance, reliability performance testing, and/or process qualification, may not yet be complete, and this item is subject to further changes or possible discontinuation. If available for ordering, purchases will be subject to an additional waiver at checkout, and are intended for early internal evaluation purposes only. These items are sold without warranties of any kind.

(3) **RoHS values:** Yes, No, RoHS Exempt. See the TI RoHS Statement for additional information and value definition.

(4) **Lead finish/Ball material:** Parts may have multiple material finish options. Finish options are separated by a vertical ruled line. Lead finish/Ball material values may wrap to two lines if the finish value exceeds the maximum column width.

(5) **MSL rating/Peak reflow:** The moisture sensitivity level ratings and peak solder (reflow) temperatures. In the event that a part has multiple moisture sensitivity ratings, only the lowest level per JEDEC standards is shown. Refer to the shipping label for the actual reflow temperature that will be used to mount the part to the printed circuit board.

(6) **Part marking:** There may be an additional marking, which relates to the logo, the lot trace code information, or the environmental category of the part.

Multiple part markings will be inside parentheses. Only one part marking contained in parentheses and separated by a "~" will appear on a part. If a line is indented then it is a continuation of the previous line and the two combined represent the entire part marking for that device.

Important Information and Disclaimer: The information provided on this page represents TI's knowledge and belief as of the date that it is provided. TI bases its knowledge and belief on information provided by third parties, and makes no representation or warranty as to the accuracy of such information. Efforts are underway to better integrate information from third parties. TI has taken and continues to take reasonable steps to provide representative and accurate information but may not have conducted destructive testing or chemical analysis on incoming materials and chemicals. TI and TI suppliers consider certain information to be proprietary, and thus CAS numbers and other limited information may not be available for release.

In no event shall TI's liability arising out of such information exceed the total purchase price of the TI part(s) at issue in this document sold by TI to Customer on an annual basis.

TAPE AND REEL INFORMATION

REEL DIMENSIONS

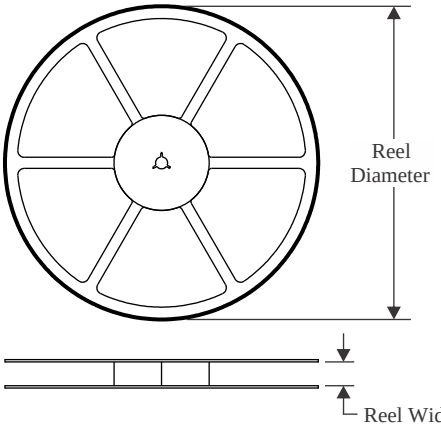

TAPE DIMENSIONS

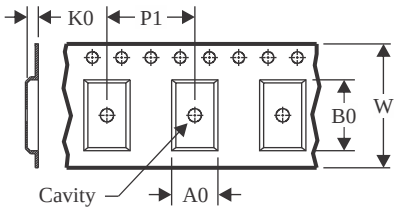

A0	Dimension designed to accommodate the component width
B0	Dimension designed to accommodate the component length
K0	Dimension designed to accommodate the component thickness
W	Overall width of the carrier tape
P1	Pitch between successive cavity centers

QUADRANT ASSIGNMENTS FOR PIN 1 ORIENTATION IN TAPE

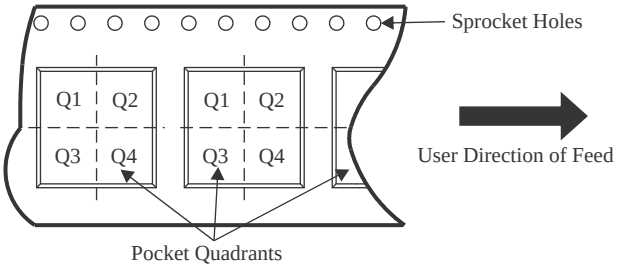

*All dimensions are nominal

Device	Package Type	Package Drawing	Pins	SPQ	Reel Diameter (mm)	Reel Width W1 (mm)	A0 (mm)	B0 (mm)	K0 (mm)	P1 (mm)	W (mm)	Pin1 Quadrant
SN65C3221EDBR	SSOP	DB	16	2000	330.0	16.4	8.35	6.6	2.4	12.0	16.0	Q1
SN65C3221EDBRG4	SSOP	DB	16	2000	330.0	16.4	8.35	6.6	2.4	12.0	16.0	Q1
SN65C3221EPWR	TSSOP	PW	16	2000	330.0	12.4	6.9	5.6	1.6	8.0	12.0	Q1
SN65C3221EPWR	TSSOP	PW	16	2000	330.0	12.4	6.9	5.6	1.6	8.0	12.0	Q1
SN65C3221EPWRG4	TSSOP	PW	16	2000	330.0	12.4	6.9	5.6	1.6	8.0	12.0	Q1

TAPE AND REEL BOX DIMENSIONS

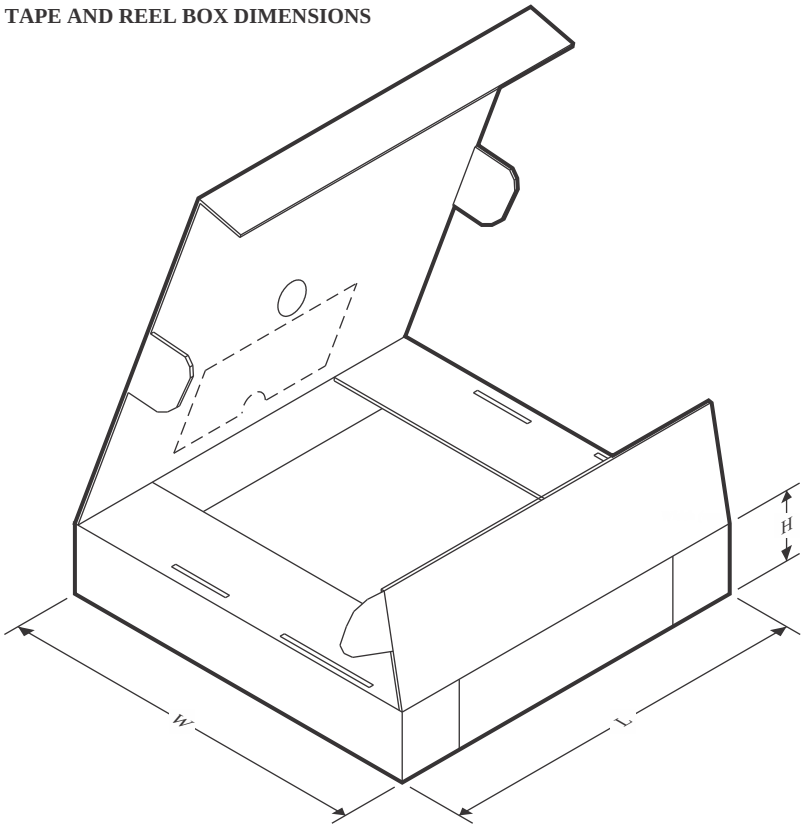

*All dimensions are nominal

Device	Package Type	Package Drawing	Pins	SPQ	Length (mm)	Width (mm)	Height (mm)
SN65C3221EDBR	SSOP	DB	16	2000	353.0	353.0	32.0
SN65C3221EDBRG4	SSOP	DB	16	2000	353.0	353.0	32.0
SN65C3221EPWR	TSSOP	PW	16	2000	356.0	356.0	35.0
SN65C3221EPWR	TSSOP	PW	16	2000	353.0	353.0	32.0
SN65C3221EPWRG4	TSSOP	PW	16	2000	353.0	353.0	32.0

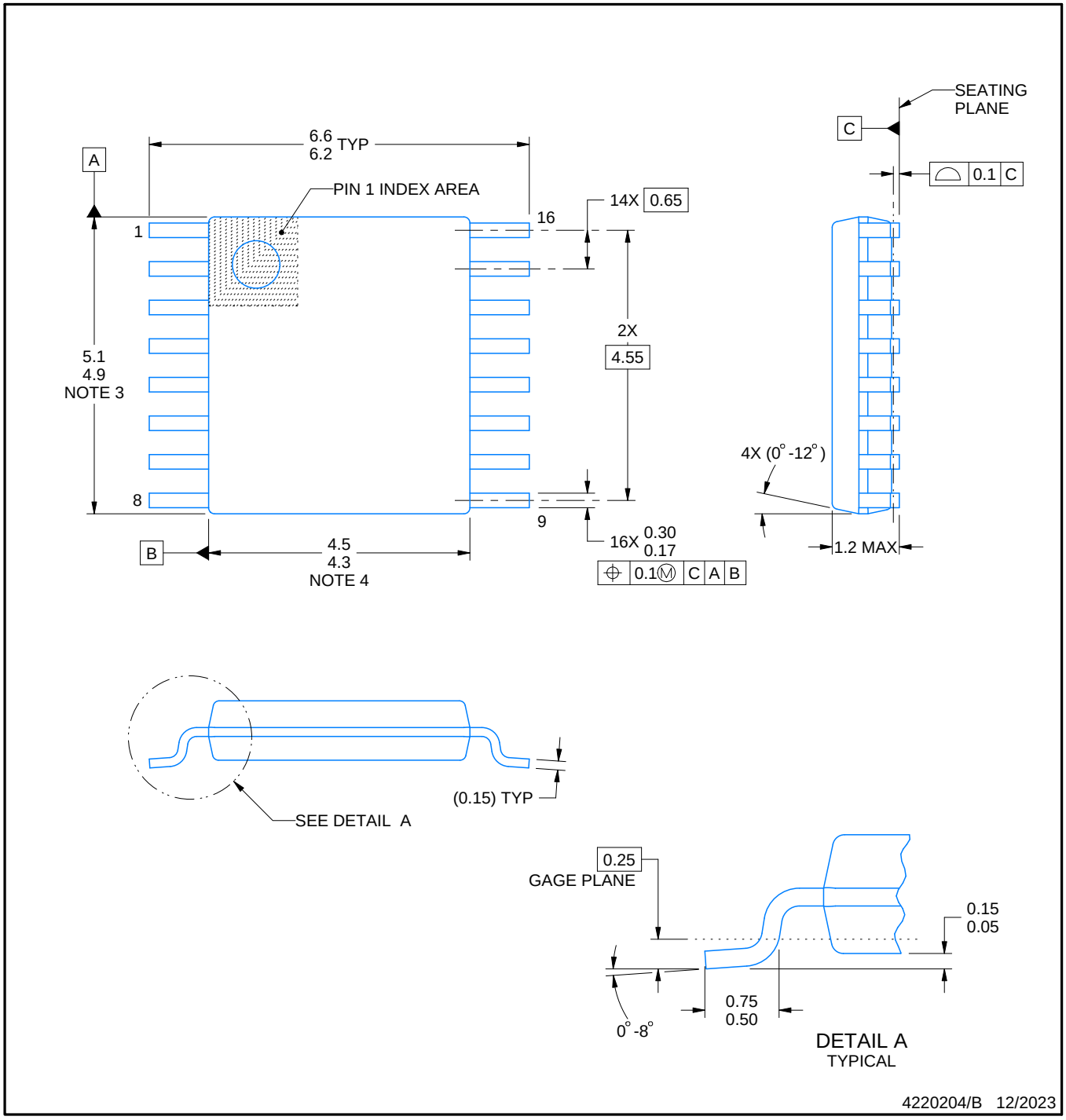

NOTES:

1. All linear dimensions are in millimeters. Any dimensions in parenthesis are for reference only. Dimensioning and tolerancing per ASME Y14.5M.
2. This drawing is subject to change without notice.
3. This dimension does not include mold flash, protrusions, or gate burrs. Mold flash, protrusions, or gate burrs shall not exceed 0.15 mm per side.
4. This dimension does not include interlead flash. Interlead flash shall not exceed 0.25 mm per side.
5. Reference JEDEC registration MO-153.

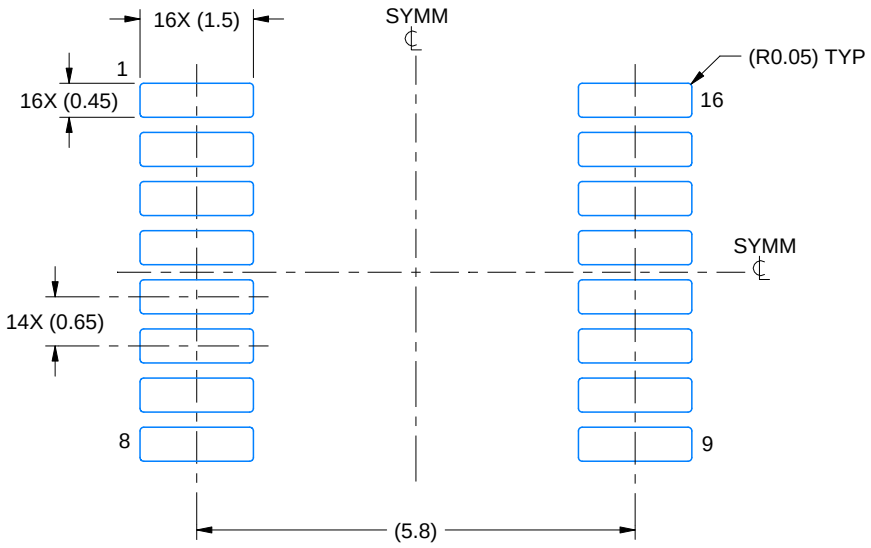

LAND PATTERN EXAMPLE
EXPOSED METAL SHOWN
SCALE: 10X

NON-SOLDER MASK DEFINED (PREFERRED)

SOLDER MASK DEFINED

SOLDER MASK DETAILS

4220204/B 12/2023

NOTES: (continued)

6. Publication IPC-7351 may have alternate designs.
7. Solder mask tolerances between and around signal pads can vary based on board fabrication site.

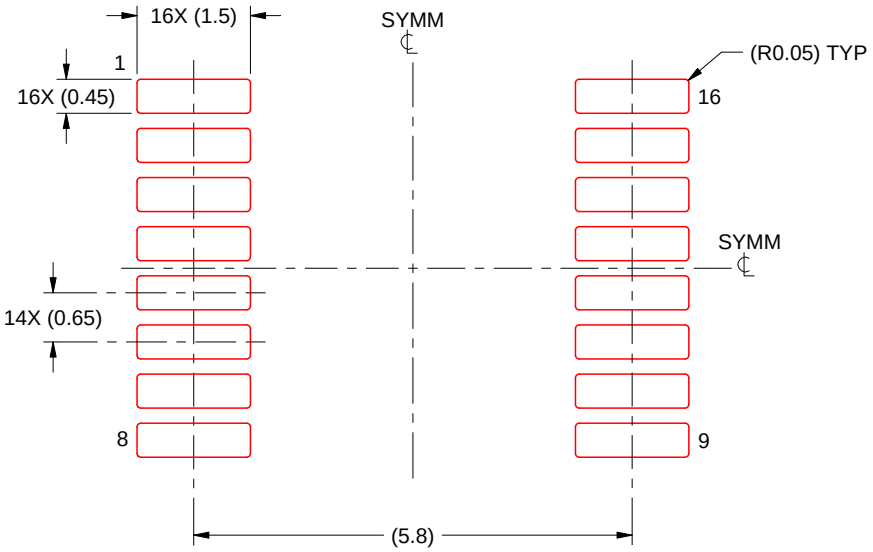

SOLDER PASTE EXAMPLE
BASED ON 0.125 mm THICK STENCIL
SCALE: 10X

4220204/B 12/2023

NOTES: (continued)

8. Laser cutting apertures with trapezoidal walls and rounded corners may offer better paste release. IPC-7525 may have alternate design recommendations.
9. Board assembly site may have different recommendations for stencil design.

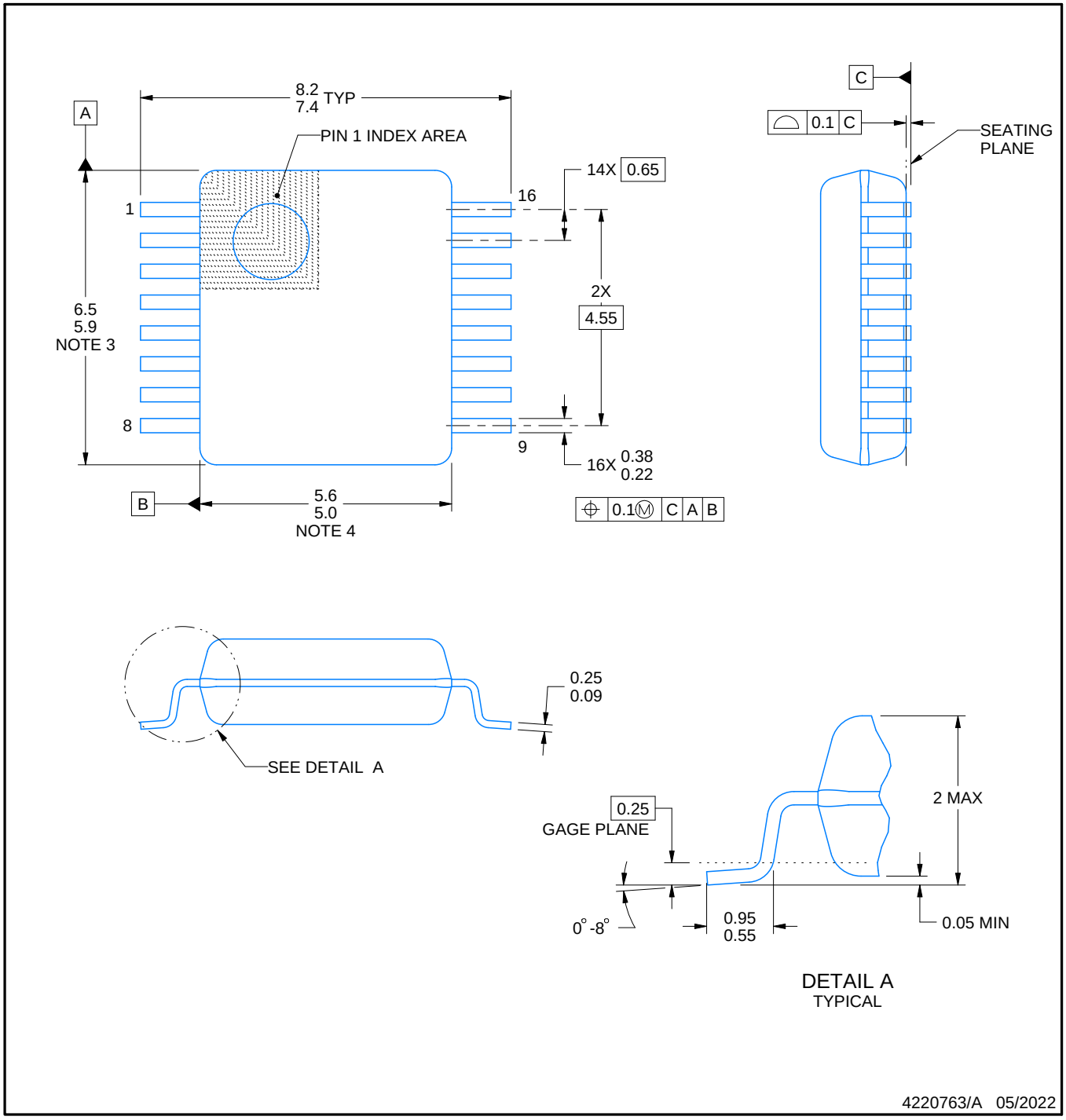

NOTES:

1. All linear dimensions are in millimeters. Any dimensions in parenthesis are for reference only. Dimensioning and tolerancing per ASME Y14.5M.
2. This drawing is subject to change without notice.
3. This dimension does not include mold flash, protrusions, or gate burrs. Mold flash, protrusions, or gate burrs shall not exceed 0.15 mm per side.
4. Reference JEDEC registration MO-150.

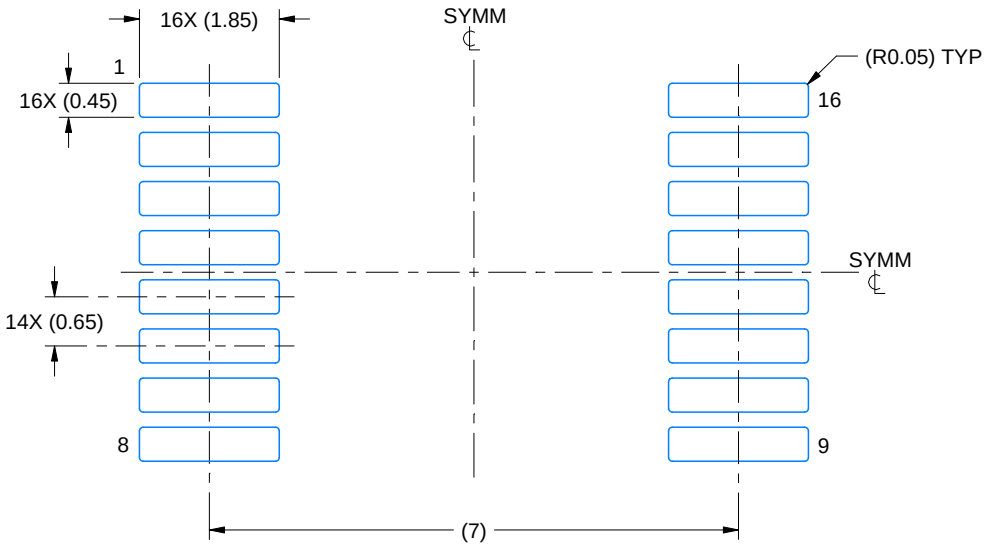

LAND PATTERN EXAMPLE
EXPOSED METAL SHOWN
SCALE: 10X

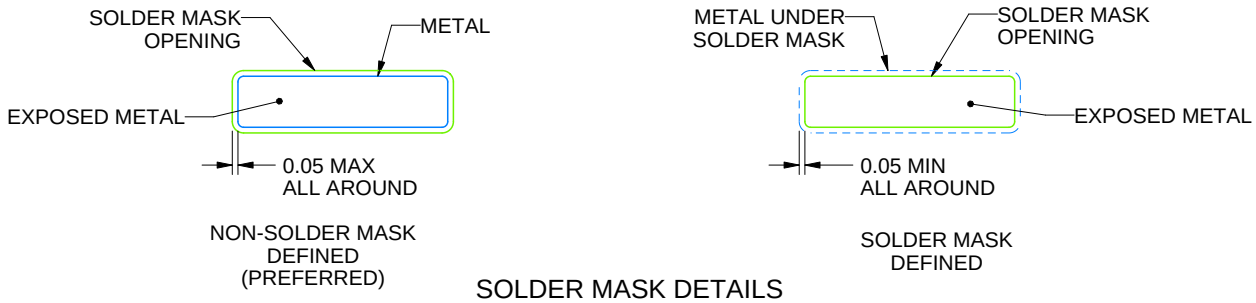

SOLDER MASK DETAILS

4220763/A 05/2022

NOTES: (continued)

5. Publication IPC-7351 may have alternate designs.
6. Solder mask tolerances between and around signal pads can vary based on board fabrication site.

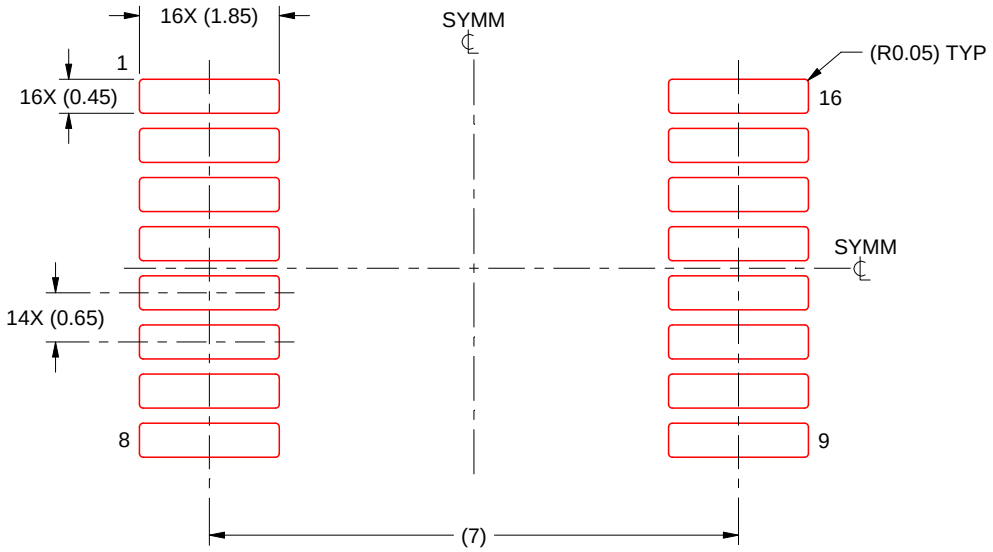

SOLDER PASTE EXAMPLE
BASED ON 0.125 mm THICK STENCIL
SCALE: 10X

4220763/A 05/2022

NOTES: (continued)

7. Laser cutting apertures with trapezoidal walls and rounded corners may offer better paste release. IPC-7525 may have alternate design recommendations.
8. Board assembly site may have different recommendations for stencil design.

重要なお知らせと免責事項

TI は、技術データと信頼性データ (データシートを含みます)、設計リソース (リファレンス デザインを含みます)、アプリケーションや設計に関する各種アドバイス、Web ツール、安全性情報、その他のリソースを、欠陥が存在する可能性のある「現状のまま」提供しており、商品性および特定目的に対する適合性の黙示保証、第三者の知的財産権の非侵害保証を含むいかなる保証も、明示的または黙示的にかかわらず拒否します。

これらのリソースは、TI 製品を使用する設計の経験を積んだ開発者への提供を意図したものです。(1) お客様のアプリケーションに適した TI 製品の選定、(2) お客様のアプリケーションの設計、検証、試験、(3) お客様のアプリケーションに該当する各種規格や、その他のあらゆる安全性、セキュリティ、規制、または他の要件への確実な適合に関する責任を、お客様のみが単独で負うものとします。

上記の各種リソースは、予告なく変更される可能性があります。これらのリソースは、リソースで説明されている TI 製品を使用するアプリケーションの開発の目的でのみ、TI はその使用をお客様に許諾します。これらのリソースに関して、他の目的で複製することや掲載することは禁止されています。TI や第三者の知的財産権のライセンスが付与されている訳ではありません。お客様は、これらのリソースを自身で使用した結果発生するあらゆる申し立て、損害、費用、損失、責任について、TI およびその代理人を完全に補償するものとし、TI は一切の責任を拒否します。

TI の製品は、 TI の販売条件 、 TI の総合的な品質ガイドライン 、 ti.com または TI 製品などに関連して提供される他の適用条件に従い提供されます。TI がこれらのリソースを提供することは、適用される TI の保証または他の保証の放棄の拡大や変更を意味するものではありません。 TI がカスタム、またはカスタマー仕様として明示的に指定していない限り、TI の製品は標準的なカタログに掲載される汎用機器です。

お客様がいかなる追加条項または代替条項を提案する場合も、TI はそれらに異議を唱え、拒否します。

Copyright © 2026, Texas Instruments Incorporated

最終更新日：2025 年 10 月