SNx4AC04 ヘキサ・インバータ

1 特長

- 2V～6V の V_{CC} で動作
- 6V までの入力電圧に対応
- 最大 t_{pd} 7ns (5V 時)

2 アプリケーション

- 反転クロック入力の同期
- スイッチのデバウンス
- デジタル信号の反転

3 概要

'AC04 デバイスには、6 つの独立したインバータがあります。これらのデバイスは、ブール関数 $Y = \overline{A}$ を実行します。

製品情報

部品番号	パッケージ (1)	パッケージ サイズ(2)	本体サイズ (3)
SNx4AC04	BQA (WQFN、14)	3mm × 2.5mm	3mm × 2.5mm
	DB (SSOP、14)	6.2mm × 7.8mm	6.2mm × 5.3mm
	D (SOIC、14)	8.65mm × 6mm	8.65mm × 3.9mm
	NS (SOP、14)	10.2mm × 7.8mm	10.3mm × 5.3mm
	PW (TSSOP、14)	5mm × 6.4mm	5mm × 4.4mm

(1) 詳細については、「メカニカル、パッケージ、および注文情報」を参照してください。
(2) パッケージ サイズ (長さ × 幅) は公称値であり、該当する場合はピンも含まれます。
(3) 本体サイズ (長さ×幅) は公称値であり、ピンは含まれません。



論理図 (正論理)

このリソースの元の言語は英語です。翻訳は概要を便宜的に提供するもので、自動化ツール (機械翻訳) を使用していることがあり、TI では翻訳の正確性および妥当性につきましては一切保証いたしません。実際の設計などの前には、ti.com で必ず最新の英語版をご参照くださいますようお願いいたします。

Table of Contents

1 特長 ... 1
2 アプリケーション ... 1
3 概要 ... 1
4 Pin Configuration and Functions ... 3
5 Specifications ... 4
5.1 Absolute Maximum Ratings ... 4
5.2 ESD Ratings ... 4
5.3 Recommended Operating Conditions ... 4
5.4 Thermal Information ... 5
5.5 Electrical Characteristics ... 5
5.6 Switching Characteristics ... 6
5.7 Operating Characteristics ... 6
6 Parameter Measurement Information ... 7
7 Detailed Description ... 8
7.1 Overview ... 8
7.2 Functional Block Diagram ... 8
7.3 Feature Description ... 8
7.4 Device Functional Modes ... 8
8 Application and Implementation ... 9
8.1 Application Information ... 9
8.2 Typical Application ... 9
8.3 Power Supply Recommendations ... 11
8.4 Layout ... 11
9 Device and Documentation Support ... 12
9.1 Device and Documentation Support ... 12
9.2 ドキュメントの更新通知を受け取る方法 ... 12
9.3 サポート・リソース ... 12
9.4 Trademarks ... 12
9.5 静電気放電に関する注意事項 ... 12
9.6 用語集 ... 12
10 Revision History ... 12
11 Mechanical, Packaging, and Orderable Information ... 13

Copyright © 2024 Texas Instruments Incorporated

4 Pin Configuration and Functions

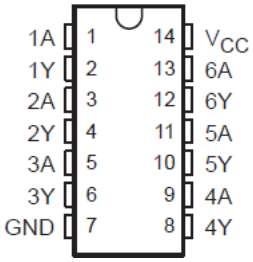

図 4-1. SN54AC04 J or W Package; SN74AC04 D, DB, N, NS, or PW Package; 14-Pin CDIP, CFP, SOIC, SSOP, PDIP, SOP, and TSSOP (Top View)

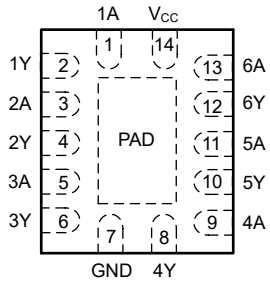

図 4-2. SN74AC04 BQA Package, 14-Pin WQFN (Top View)

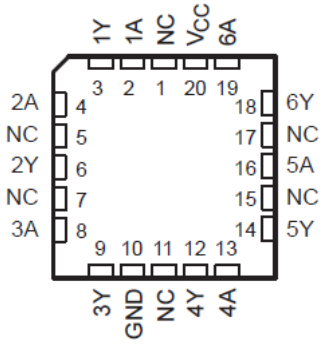

図 4-3. SN54AC04 FK Package, 20-Pin LCCC (Top View)

PIN			I/O	DESCRIPTION
NAME	D, DB, N, NS, PW, J, W, or BQA	FK		
1A	1	2	Input	Channel 1, Input A
1Y	2	3	Output	Channel 1, Output Y
2A	3	4	Input	Channel 2, Input A
2Y	4	6	Output	Channel 2, Output Y
3A	5	8	Input	Channel 3, Input A
3Y	6	9	Output	Channel 3, Output Y
GND	7	10	—	Ground
4Y	8	12	Output	Channel 4, Output Y
4A	9	13	Input	Channel 4, Input A
5Y	10	14	Output	Channel 5, Output Y
5A	11	16	Input	Channel 5, Input A
6Y	12	18	Output	Channel 6, Output Y
6A	13	19	Input	Channel 6, Input A
V_{CC}	14	20	—	Positive Supply
NC		1, 5, 7, 11, 15, 17	—	Not internally connected
Thermal Pad(1)			—	The thermal pad can be connected to GND or left floating. Do not connect to any other signal or supply.

(1) BQA package only.

5 Specifications

5.1 Absolute Maximum Ratings

over operating free-air temperature range (unless otherwise noted)(1)

			MIN	MAX	UNIT
V_{CC}	Supply voltage range		–0.5	7	V
V_I	Input voltage range(2)		–0.5	V_{CC} + 0.5	V
V_O	Output voltage range(2)		–0.5	V_{CC} + 0.5	V
I_{IK}	Input clamp current	V_I < 0 or V_I > V_{CC}		±20	mA
I_{OK}	Output clamp current	V_O < 0 or V_O > V_{CC}		±20	mA
I_O	Continuous output current	V_O = 0 to V_{CC}		±50	mA
	Continuous current through V_{CC} or GND			±200	mA
T_{stg}	Storage temperature range		–60	150	°C

(1) Stresses beyond those listed under “absolute maximum ratings” may cause permanent damage to the device. These are stress ratings only, and functional operation of the device at these or any other conditions beyond those indicated under “recommended operating conditions” is not implied. Exposure to absolute-maximum-rated conditions for extended periods may affect device reliability.
(2) The input and output voltage ratings may be exceeded if the input and output current ratings are observed.

5.2 ESD Ratings

			VALUE	UNIT
$V_{(ESD)}$	Electrostatic discharge	Human body model (HBM), per ANSI/ESDA/JEDEC JS-001(1)	±3000	V
		Charged-device model (CDM), per JEDEC specification JESD22-C101(2)	±1000	

(1) JEDEC document JEP155 states that 500-V HBM allows safe manufacturing with a standard ESD control process.
(2) JEDEC document JEP157 states that 250-V CDM allows safe manufacturing with a standard ESD control process.

5.3 Recommended Operating Conditions

over recommended operating free-air temperature range (unless otherwise noted)(1)

			SN54AC04		SN74AC04		UNIT
			MIN	MAX	MIN	MAX	
V_{CC}	Supply voltage		2	6	2	6	V
V_{IH}	High-level input voltage	V_{CC} = 3 V	2.1		2.1		V
		V_{CC} = 4.5 V	3.15		3.15		
		V_{CC} = 5.5 V	3.85		3.85		
V_{IL}	Low-level input voltage	V_{CC} = 3 V		0.9		0.9	V
		V_{CC} = 4.5 V		1.35		1.35	
		V_{CC} = 5.5 V		1.65		1.65	
V_I	Input voltage		0	V_{CC}	0	V_{CC}	V
V_O	Output voltage		0	V_{CC}	0	V_{CC}	V
I_{OH}	High-level output current	V_{CC} = 3 V		–12		–12	mA
		V_{CC} = 4.5 V		–24		–24	
		V_{CC} = 5.5 V		–24		–24	
I_{OL}	Low-level output current	V_{CC} = 3 V		12		12	mA
		V_{CC} = 4.5 V		24		24	
		V_{CC} = 5.5 V		24		24	
$\Delta t/\Delta v$	Input transition rise or fall rate			8		8	ns/V

Copyright © 2024 Texas Instruments Incorporated

over recommended operating free-air temperature range (unless otherwise noted)(1)

		SN54AC04		SN74AC04		UNIT
		MIN	MAX	MIN	MAX	
T_A	Operating free-air temperature	–55	125	–40	85	°C

(1) All unused inputs of the device must be held at V_{CC} or GND to ensure proper device operation. Refer to the TI application report, *Implications of Slow or Floating CMOS Inputs*, literature number SCBA004.

5.4 Thermal Information

THERMAL METRIC(1)		SN74AC04						UNIT
		BQA (WQFN)	D (SOIC)	DB (SSOP)	N (PDIP)	NS (SOP)	PW (TSSOP)	
		14 PINS						
$R_{\theta JA}$	Junction-to-ambient thermal resistance	93.4	89.9	96	80	92.4	148	°C/W

(1) For more information about traditional and new thermal metrics, see the *Semiconductor and IC Package Thermal Metrics* application report, SPRA953.

5.5 Electrical Characteristics

over recommended operating free-air temperature range (unless otherwise noted)

PARAMETER	TEST CONDITIONS	V_{CC}	T_A = 25°C			SN54AC04		SN74AC04		UNIT
			MIN	TYP	MAX	MIN	MAX	MIN	MAX	
V_{OH}	I_{OH} = –50 µA	3 V	2.9	2.99		2.9		2.9		V
		4.5 V	4.4	4.49		4.4		4.4		
		5.5 V	5.4	5.49		5.4		5.4		
	I_{OH} = –12 mA	3 V	2.56			2.4		2.46		
	I_{OH} = –24 mA	4.5 V	3.86			3.7		3.76		
		5.5 V	4.86			4.7		4.76		
	I_{OH} = –50 mA(1)	5.5 V				3.85				
	I_{OH} = –75 mA(1)	5.5 V						3.85		
V_{OL}	I_{OL} = 50 µA	3 V		0.002	0.1		0.1		0.1	V
		4.5 V		0.001	0.1		0.1		0.1	
		5.5 V		0.001	0.1		0.1		0.1	
	I_{OL} = 12 mA	3 V			0.36		0.5		0.44	
	I_{OL} = 24 mA	4.5 V			0.36		0.5		0.44	
		5.5 V			0.36		0.5		0.44	
	I_{OL} = 50 mA(1)	5.5 V					1.65			
	I_{OL} = 75 mA(1)	5.5 V							1.65	
I_I	V_I = V_{CC} or GND	5.5 V			±0.1		±1		±1	µA
I_{CC}	V_I = V_{CC} or GND, I_O = 0	5.5 V			2		40		20	µA
C_i	V_I = V_{CC} or GND			2.8						pF

(1) Not more than one output should be tested at a time, and the duration of the test should not exceed 2 ms.

Copyright © 2024 Texas Instruments Incorporated

5.6 Switching Characteristics

over recommended operating free-air temperature range, V_{CC} = 3.3 V ± 0.3 V (unless otherwise noted) (see Load Circuit and Voltage Waveforms)

PARAMETER	FROM (INPUT)	TO (OUTPUT)	T_A = 25°C			SN54AC04		SN74AC04		UNIT
			MIN	TYP	MAX	MIN	MAX	MIN	MAX	
t_{PLH}	A	Y	1.5	4.5	9	1	11	1	10	ns
t_{PHL}			1.5	4.5	8.5	1	10	1	9.5	

5.7 Operating Characteristics

V_{CC} = 5 V, T_A = 25°C

PARAMETER		TEST CONDITIONS		TYP	UNIT
C_{pd}	Power dissipation capacitance	C_L = 50 pF	f = 1 MHz	45	pF

Copyright © 2024 Texas Instruments Incorporated

6 Parameter Measurement Information

Load Circuit and Voltage Waveforms

TEST	S1
t_{PLH}/t_{PHL}	Open

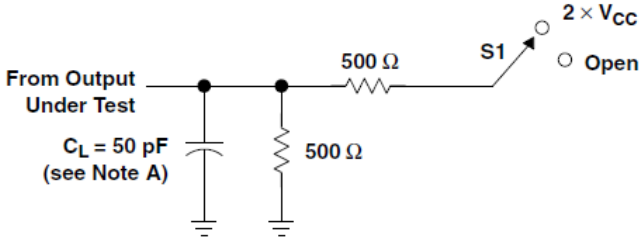

LOAD CIRCUIT

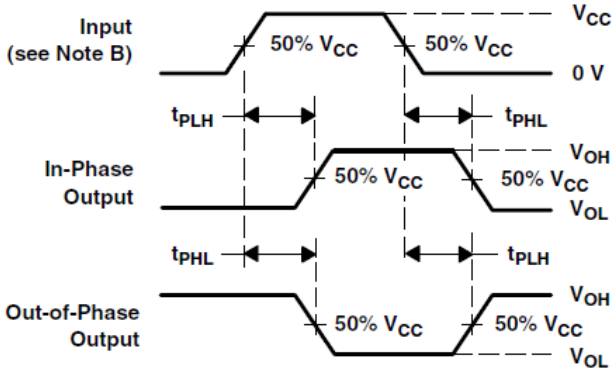

VOLTAGE WAVEFORMS

NOTES: A. C_L includes probe and jig capacitance.
B. All input pulses are supplied by generators having the following characteristics: PRR ≤ 1 MHz, Z_O = 50 Ω, t_r ≤ 2.5 ns, t_f ≤ 2.5 ns.
C. The outputs are measured one at a time with one input transition per measurement.

Copyright © 2024 Texas Instruments Incorporated

7 Detailed Description

7.1 Overview

The 'AC04 devices contain six independent inverters. The devices perform the Boolean function $Y = \overline{A}$.

7.2 Functional Block Diagram



Logic Diagram (Positive Logic)

7.3 Feature Description

The SNx4AC04 devices have an operating V_{CC} range from 2 V to 6 V.

7.4 Device Functional Modes

Function Table lists the function modes of the SNx4ACT04.

Function Table (Each Inverter)

INPUT	OUTPUT
A	Y
H	L
L	H

Copyright © 2024 Texas Instruments Incorporated

8 Application and Implementation

注

以下のアプリケーション情報は、TI の製品仕様に含まれるものではなく、TI ではその正確性または完全性を保証いたしません。個々の目的に対する製品の適合性については、お客様の責任で判断していただくことになります。お客様は自身の設計実装を検証しテストすることで、システムの機能を確認する必要があります。

8.1 Application Information

The SNx4ACT04 is a low-drive CMOS device that can be used for a multitude of bus interface type applications where output ringing is a concern. The low drive and slow edge rates will minimize overshoot and undershoot on the outputs.

8.2 Typical Application

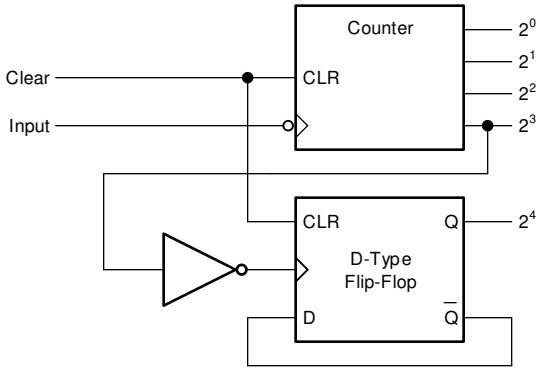

図 8-1. Typical Application Schematic

8.2.1 Design Requirements

This device uses CMOS technology and has balanced output drive. Care should be taken to avoid bus contention because it can drive currents that would exceed maximum limits. Outputs can be combined to produce higher drive but the high drive will also create faster edges into light loads, so routing and load conditions should be considered to prevent ringing.

8.2.2 Detailed Design Procedure

1. Recommended Input Conditions
   - Rise time and fall time specs: See (Δt/ΔV) in the *セクション 5.3* .
   - Specified high and low levels: See (V_{IH} and V_{IL}) in the *セクション 5.3* .
2. Recommend Output Conditions
   - Load currents should not exceed 25 mA per output and 75 mA total for the part.
   - Outputs should not be pulled above V_{CC}.

Copyright © 2024 Texas Instruments Incorporated

8.2.3 Application Curve

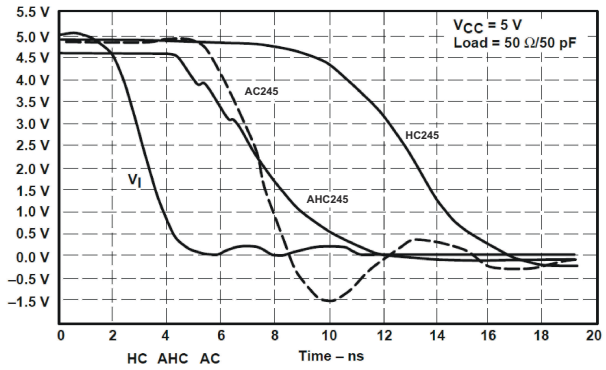

図 8-2. Switching Characteristics Comparison

Copyright © 2024 Texas Instruments Incorporated

8.3 Power Supply Recommendations

The power supply can be any voltage between the MIN and MAX supply voltage rating located in the セクション 5.3 .

Each V_{CC} pin should have a good bypass capacitor to prevent power disturbance. For devices with a single supply, 0.1 µF is recommended; if there are multiple V_{CC} pins, then 0.01 µF or 0.022 µF is recommended for each power pin. It is acceptable to parallel multiple bypass caps to reject different frequencies of noise. A 0.1 µF and a 1 µF are commonly used in parallel. The bypass capacitor should be installed as close to the power pin as possible for best results.

8.4 Layout

8.4.1 Layout Guidelines

When using multiple-bit logic devices, inputs should never float.

In many cases, functions or parts of functions of digital logic devices are unused, for example, when only two inputs of a triple-input AND gate are used or only 3 of the 4 buffer gates are used. Such input pins should not be left unconnected because the undefined voltages at the outside connections result in undefined operational states. セクション 8.4.1.1 specifies the rules that must be observed under all circumstances. All unused inputs of digital logic devices must be connected to a high or low bias to prevent them from floating. The logic level that should be applied to any particular unused input depends on the function of the device. Generally they will be tied to GND or V_{CC}, whichever makes more sense or is more convenient. It is generally acceptable to float outputs, unless the part is a transceiver. If the transceiver has an output enable pin, it will disable the output section of the part when asserted. This will not disable the input section of the IOs, so they cannot float when disabled.

8.4.1.1 Layout Example

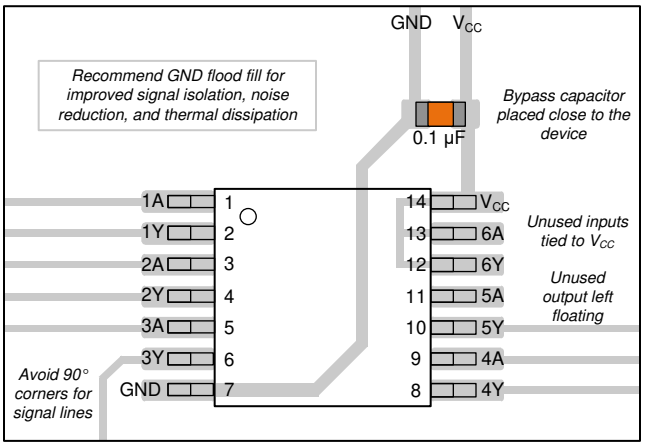

図 8-3. Example Layout of the SN74AC04

9 Device and Documentation Support

TI offers an extensive line of development tools. Tools and software to evaluate the performance of the device, generate code, and develop solutions are listed below.

9.1 Device and Documentation Support

9.1.1 Related Documentation

The table below lists quick access links. Categories include technical documents, support and community resources, tools and software, and quick access to sample or buy.

表 9-1. Related Links

PARTS	PRODUCT FOLDER	SAMPLE & BUY	TECHNICAL DOCUMENTS	TOOLS & SOFTWARE	SUPPORT & COMMUNITY
SN54AC04	Click here	Click here	Click here	Click here	Click here
SN74AC04	Click here	Click here	Click here	Click here	Click here

9.2 ドキュメントの更新通知を受け取る方法

ドキュメントの更新についての通知を受け取るには、www.tij.co.jp のデバイス製品フォルダを開いてください。[通知] をクリックして登録すると、変更されたすべての製品情報に関するダイジェストを毎週受け取ることができます。変更の詳細については、改訂されたドキュメントに含まれている改訂履歴をご覧ください。

9.3 サポート・リソース

テキサス・インスツルメンツ E2E™ サポート・フォーラムは、エンジニアが検証済みの回答と設計に関するヒントをエキスパートから迅速かつ直接得ることができる場所です。既存の回答を検索したり、独自の質問をしたりすることで、設計で必要な支援を迅速に得ることができます。

リンクされているコンテンツは、各寄稿者により「現状のまま」提供されるものです。これらはテキサス・インスツルメンツの仕様を構成するものではなく、必ずしもテキサス・インスツルメンツの見解を反映したものではありません。テキサス・インスツルメンツの使用条件を参照してください。

9.4 Trademarks

テキサス・インスツルメンツ E2E™ is a trademark of Texas Instruments.
すべての商標は、それぞれの所有者に帰属します。

9.5 静電気放電に関する注意事項



この IC は、ESD によって破損する可能性があります。テキサス・インスツルメンツは、IC を取り扱う際には常に適切な注意を払うことを推奨します。正しい取り扱いおよび設置手順に従わない場合、デバイスを破損するおそれがあります。

ESD による破損は、わずかな性能低下からデバイスの完全な故障まで多岐にわたります。精密な IC の場合、パラメータがわずかに変化するだけで公表されている仕様から外れる可能性があるため、破損が発生しやすくなっています。

9.6 用語集

テキサス・インスツルメンツ用語集　　この用語集には、用語や略語の一覧および定義が記載されています。

10 Revision History

資料番号末尾の英字は改訂を表しています。その改訂履歴は英語版に準じています。

Changes from Revision F (January 2023) to Revision G (July 2024)	Page
• 「製品情報」表、「ピン構成および機能」セクション、および「熱に関する情報」表に BQA パッケージを追加	1
• 製品情報の表にパッケージ サイズを追加	1
• Updated RθJA values: D = 86 to 89.9, NS = 76 to 92.4, PW = 113 to 148, all values in °C/W	5
• Updated *Layout Example* image	11

Copyright © 2024 Texas Instruments Incorporated

Changes from Revision E (July 1995) to Revision F (January 2023)	Page
• 「アプリケーション」セクション、「製品情報」表、「ピンの機能」表、「ESD 定格」表、「熱に関する情報」表、「代表的特性」セクション、「機能説明」セクション、「デバイスの機能モード」セクション、「アプリケーションと実装」セクション、「電源に関する推奨事項」セクション、「レイアウト」セクション、「デバイスおよびドキュメントのサポート」セクション、「メカニカル、パッケージ、および注文情報」セクションを追加	1

11 Mechanical, Packaging, and Orderable Information

The following pages include mechanical, packaging, and orderable information. This information is the most current data available for the designated devices. This data is subject to change without notice and revision of this document. For browser-based versions of this data sheet, refer to the left-hand navigation.

Copyright © 2024 Texas Instruments Incorporated

重要なお知らせと免責事項

テキサス・インスツルメンツは、技術データと信頼性データ (データシートを含みます)、設計リソース (リファレンス デザインを含みます)、アプリケーションや設計に関する各種アドバイス、Web ツール、安全性情報、その他のリソースを、欠陥が存在する可能性のある「現状のまま」提供しており、商品性および特定目的に対する適合性の黙示保証、第三者の知的財産権の非侵害保証を含むいかなる保証も、明示的または黙示的にかかわらず拒否します。

これらのリソースは、テキサス・インスツルメンツ製品を使用する設計の経験を積んだ開発者への提供を意図したものです。(1) お客様のアプリケーションに適した テキサス・インスツルメンツ製品の選定、(2) お客様のアプリケーションの設計、検証、試験、(3) お客様のアプリケーションに該当する各種規格や、その他のあらゆる安全性、セキュリティ、規制、または他の要件への確実な適合に関する責任を、お客様のみが単独で負うものとします。

上記の各種リソースは、予告なく変更される可能性があります。これらのリソースは、リソースで説明されている テキサス・インスツルメンツ製品を使用するアプリケーションの開発の目的でのみ、テキサス・インスツルメンツはその使用をお客様に許諾します。これらのリソースに関して、他の目的で複製することや掲載することは禁止されています。テキサス・インスツルメンツや第三者の知的財産権のライセンスが付与されている訳ではありません。お客様は、これらのリソースを自身で使用した結果発生するあらゆる申し立て、損害、費用、損失、責任について、テキサス・インスツルメンツおよびその代理人を完全に補償するものとし、テキサス・インスツルメンツは一切の責任を拒否します。

テキサス・インスツルメンツの製品は、テキサス・インスツルメンツの販売条件、または ti.com やかかる テキサス・インスツルメンツ製品の関連資料などのいずれかを通じて提供する適用可能な条項の下で提供されています。テキサス・インスツルメンツがこれらのリソースを提供することは、適用されるテキサス・インスツルメンツの保証または他の保証の放棄の拡大や変更を意味するものではありません。

お客様がいかなる追加条項または代替条項を提案した場合でも、テキサス・インスツルメンツはそれらに異議を唱え、拒否します。

郵送先住所:Texas Instruments, Post Office Box 655303, Dallas, Texas 75265
Copyright © 2024, Texas Instruments Incorporated

PACKAGING INFORMATION

Orderable part number	Status (1)	Material type (2)	Package | Pins	Package qty | Carrier	RoHS (3)	Lead finish/ Ball material (4)	MSL rating/ Peak reflow (5)	Op temp (°C)	Part marking (6)
5962-87609012A	Active	Production	LCCC (FK) | 20	55 | TUBE	No	SNPB	N/A for Pkg Type	-55 to 125	5962-87609012A SNJ54AC 04FK
5962-8760901CA	Active	Production	CDIP (J) | 14	25 | TUBE	No	SNPB	N/A for Pkg Type	-55 to 125	5962-8760901CA SNJ54AC04J
5962-8760901DA	Active	Production	CFP (W) | 14	25 | TUBE	No	SNPB	N/A for Pkg Type	-55 to 125	5962-8760901DA SNJ54AC04W
SN74AC04BQAR	Active	Production	WQFN (BQA) | 14	3000 | LARGE T&R	Yes	NIPDAU	Level-1-260C-UNLIM	-40 to 125	AC04
SN74AC04BQAR.A	Active	Production	WQFN (BQA) | 14	3000 | LARGE T&R	Yes	NIPDAU	Level-1-260C-UNLIM	-40 to 125	AC04
SN74AC04D	Obsolete	Production	SOIC (D) | 14	-	-	Call TI	Call TI	-40 to 85	AC04
SN74AC04DBR	Active	Production	SSOP (DB) | 14	2000 | LARGE T&R	Yes	NIPDAU	Level-1-260C-UNLIM	-40 to 85	AC04
SN74AC04DBR.A	Active	Production	SSOP (DB) | 14	2000 | LARGE T&R	Yes	NIPDAU	Level-1-260C-UNLIM	-40 to 85	AC04
SN74AC04DR	Active	Production	SOIC (D) | 14	2500 | LARGE T&R	Yes	NIPDAU	Level-1-260C-UNLIM	-40 to 85	AC04
SN74AC04DR.A	Active	Production	SOIC (D) | 14	2500 | LARGE T&R	Yes	NIPDAU	Level-1-260C-UNLIM	-40 to 85	AC04
SN74AC04DRG4	Active	Production	SOIC (D) | 14	2500 | LARGE T&R	Yes	NIPDAU	Level-1-260C-UNLIM	-40 to 125	AC04
SN74AC04DRG4.A	Active	Production	SOIC (D) | 14	2500 | LARGE T&R	Yes	NIPDAU	Level-1-260C-UNLIM	-40 to 125	AC04
SN74AC04N	NRND	Production	PDIP (N) | 14	25 | TUBE	Yes	NIPDAU	N/A for Pkg Type	-40 to 85	SN74AC04N
SN74AC04N.A	NRND	Production	PDIP (N) | 14	25 | TUBE	Yes	NIPDAU	N/A for Pkg Type	-40 to 85	SN74AC04N
SN74AC04NE4	NRND	Production	PDIP (N) | 14	25 | TUBE	Yes	NIPDAU	N/A for Pkg Type	-40 to 85	SN74AC04N
SN74AC04NSR	Active	Production	SOP (NS) | 14	2000 | LARGE T&R	Yes	NIPDAU	Level-1-260C-UNLIM	-40 to 85	AC04
SN74AC04NSR.A	Active	Production	SOP (NS) | 14	2000 | LARGE T&R	Yes	NIPDAU	Level-1-260C-UNLIM	-40 to 85	AC04
SN74AC04PW	Obsolete	Production	TSSOP (PW) | 14	-	-	Call TI	Call TI	-40 to 85	AC04
SN74AC04PWR	Active	Production	TSSOP (PW) | 14	2000 | LARGE T&R	Yes	NIPDAU | SN	Level-1-260C-UNLIM	-40 to 85	AC04
SN74AC04PWR.A	Active	Production	TSSOP (PW) | 14	2000 | LARGE T&R	Yes	NIPDAU	Level-1-260C-UNLIM	-40 to 85	AC04
SN74AC04PWRG4	Active	Production	TSSOP (PW) | 14	2000 | LARGE T&R	Yes	NIPDAU	Level-1-260C-UNLIM	-40 to 85	AC04
SN74AC04PWRG4.A	Active	Production	TSSOP (PW) | 14	2000 | LARGE T&R	Yes	NIPDAU	Level-1-260C-UNLIM	-40 to 125	AC04
SNJ54AC04FK	Active	Production	LCCC (FK) | 20	55 | TUBE	No	SNPB	N/A for Pkg Type	-55 to 125	5962-87609012A SNJ54AC 04FK

Orderable part number	Status (1)	Material type (2)	Package | Pins	Package qty | Carrier	RoHS (3)	Lead finish/ Ball material (4)	MSL rating/ Peak reflow (5)	Op temp (°C)	Part marking (6)
SNJ54AC04FK.A	Active	Production	LCCC (FK) | 20	55 | TUBE	No	SNPB	N/A for Pkg Type	-55 to 125	5962-87609012A SNJ54AC 04FK
SNJ54AC04J	Active	Production	CDIP (J) | 14	25 | TUBE	No	SNPB	N/A for Pkg Type	-55 to 125	5962-8760901CA SNJ54AC04J
SNJ54AC04J.A	Active	Production	CDIP (J) | 14	25 | TUBE	No	SNPB	N/A for Pkg Type	-55 to 125	5962-8760901CA SNJ54AC04J
SNJ54AC04W	Active	Production	CFP (W) | 14	25 | TUBE	No	SNPB	N/A for Pkg Type	-55 to 125	5962-8760901DA SNJ54AC04W
SNJ54AC04W.A	Active	Production	CFP (W) | 14	25 | TUBE	No	SNPB	N/A for Pkg Type	-55 to 125	5962-8760901DA SNJ54AC04W

(1) **Status:** For more details on status, see our product life cycle.

(2) **Material type:** When designated, preproduction parts are prototypes/experimental devices, and are not yet approved or released for full production. Testing and final process, including without limitation quality assurance, reliability performance testing, and/or process qualification, may not yet be complete, and this item is subject to further changes or possible discontinuation. If available for ordering, purchases will be subject to an additional waiver at checkout, and are intended for early internal evaluation purposes only. These items are sold without warranties of any kind.

(3) **RoHS values:** Yes, No, RoHS Exempt. See the TI RoHS Statement for additional information and value definition.

(4) **Lead finish/Ball material:** Parts may have multiple material finish options. Finish options are separated by a vertical ruled line. Lead finish/Ball material values may wrap to two lines if the finish value exceeds the maximum column width.

(5) **MSL rating/Peak reflow:** The moisture sensitivity level ratings and peak solder (reflow) temperatures. In the event that a part has multiple moisture sensitivity ratings, only the lowest level per JEDEC standards is shown. Refer to the shipping label for the actual reflow temperature that will be used to mount the part to the printed circuit board.

(6) **Part marking:** There may be an additional marking, which relates to the logo, the lot trace code information, or the environmental category of the part.

Multiple part markings will be inside parentheses. Only one part marking contained in parentheses and separated by a "~" will appear on a part. If a line is indented then it is a continuation of the previous line and the two combined represent the entire part marking for that device.

Important Information and Disclaimer: The information provided on this page represents TI's knowledge and belief as of the date that it is provided. TI bases its knowledge and belief on information provided by third parties, and makes no representation or warranty as to the accuracy of such information. Efforts are underway to better integrate information from third parties. TI has taken and continues to take reasonable steps to provide representative and accurate information but may not have conducted destructive testing or chemical analysis on incoming materials and chemicals. TI and TI suppliers consider certain information to be proprietary, and thus CAS numbers and other limited information may not be available for release.

In no event shall TI's liability arising out of such information exceed the total purchase price of the TI part(s) at issue in this document sold by TI to Customer on an annual basis.

OTHER QUALIFIED VERSIONS OF SN54AC04, SN74AC04 :

- Catalog : SN74AC04
- Automotive : SN74AC04-Q1, SN74AC04-Q1
- Enhanced Product : SN74AC04-EP, SN74AC04-EP
- Military : SN54AC04

NOTE: Qualified Version Definitions:

- Catalog - TI's standard catalog product
- Automotive - Q100 devices qualified for high-reliability automotive applications targeting zero defects
- Enhanced Product - Supports Defense, Aerospace and Medical Applications
- Military - QML certified for Military and Defense Applications

TAPE AND REEL INFORMATION

REEL DIMENSIONS

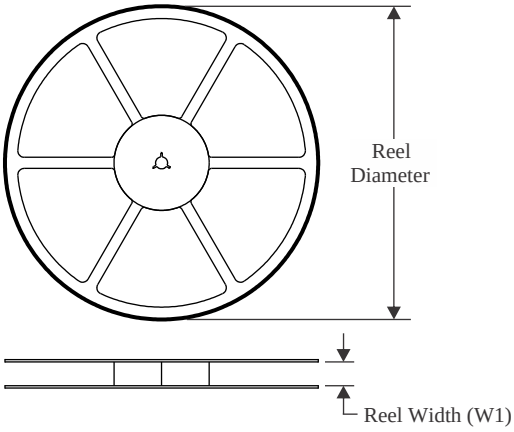

TAPE DIMENSIONS

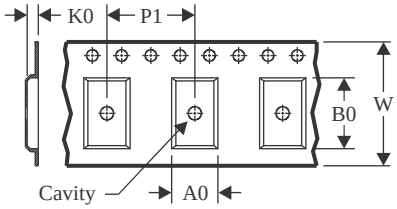

A0	Dimension designed to accommodate the component width
B0	Dimension designed to accommodate the component length
K0	Dimension designed to accommodate the component thickness
W	Overall width of the carrier tape
P1	Pitch between successive cavity centers

QUADRANT ASSIGNMENTS FOR PIN 1 ORIENTATION IN TAPE

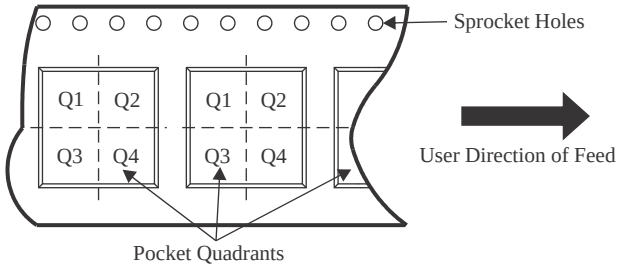

*All dimensions are nominal

Device	Package Type	Package Drawing	Pins	SPQ	Reel Diameter (mm)	Reel Width W1 (mm)	A0 (mm)	B0 (mm)	K0 (mm)	P1 (mm)	W (mm)	Pin1 Quadrant
SN74AC04BQAR	WQFN	BQA	14	3000	180.0	12.4	2.8	3.3	1.1	4.0	12.0	Q1
SN74AC04DBR	SSOP	DB	14	2000	330.0	16.4	8.35	6.6	2.4	12.0	16.0	Q1
SN74AC04DR	SOIC	D	14	2500	330.0	12.4	3.75	3.75	1.15	8.0	12.0	Q1
SN74AC04DRG4	SOIC	D	14	2500	330.0	12.4	3.75	3.75	1.15	8.0	12.0	Q1
SN74AC04NSR	SOP	NS	14	2000	330.0	16.4	8.1	10.4	2.5	12.0	16.0	Q1
SN74AC04NSR	SOP	NS	14	2000	330.0	16.4	8.45	10.55	2.5	12.0	16.2	Q1
SN74AC04PWR	TSSOP	PW	14	2000	330.0	12.4	6.9	5.6	1.6	8.0	12.0	Q1
SN74AC04PWRG4	TSSOP	PW	14	2000	330.0	12.4	6.9	5.6	1.6	8.0	12.0	Q1

TAPE AND REEL BOX DIMENSIONS

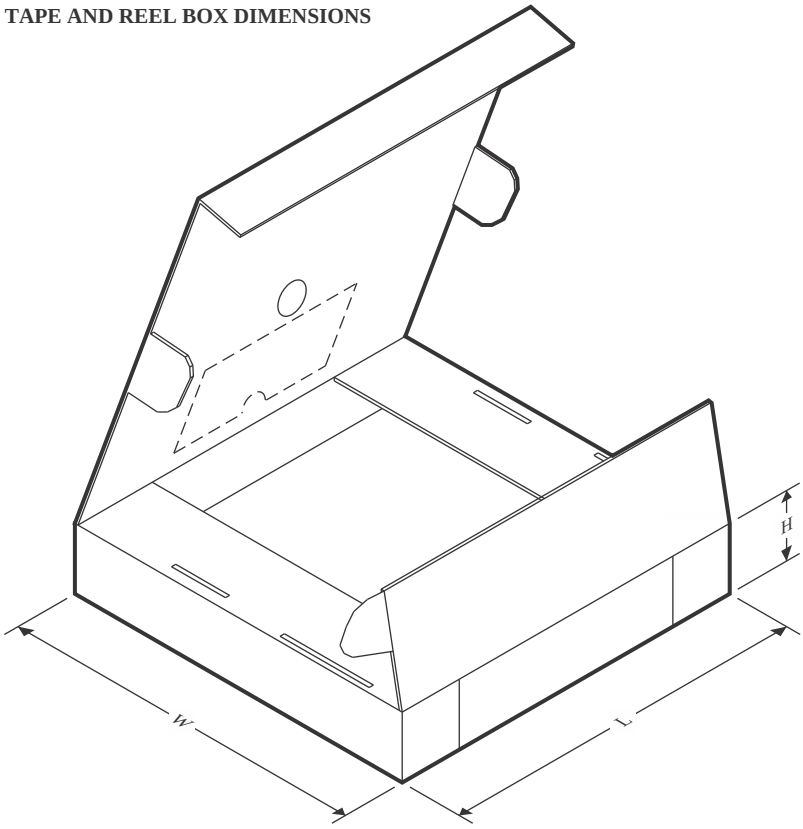

*All dimensions are nominal

Device	Package Type	Package Drawing	Pins	SPQ	Length (mm)	Width (mm)	Height (mm)
SN74AC04BQAR	WQFN	BQA	14	3000	210.0	185.0	35.0
SN74AC04DBR	SSOP	DB	14	2000	353.0	353.0	32.0
SN74AC04DR	SOIC	D	14	2500	340.5	336.1	32.0
SN74AC04DRG4	SOIC	D	14	2500	340.5	336.1	32.0
SN74AC04NSR	SOP	NS	14	2000	353.0	353.0	32.0
SN74AC04NSR	SOP	NS	14	2000	353.0	353.0	32.0
SN74AC04PWR	TSSOP	PW	14	2000	353.0	353.0	32.0
SN74AC04PWRG4	TSSOP	PW	14	2000	353.0	353.0	32.0

TUBE

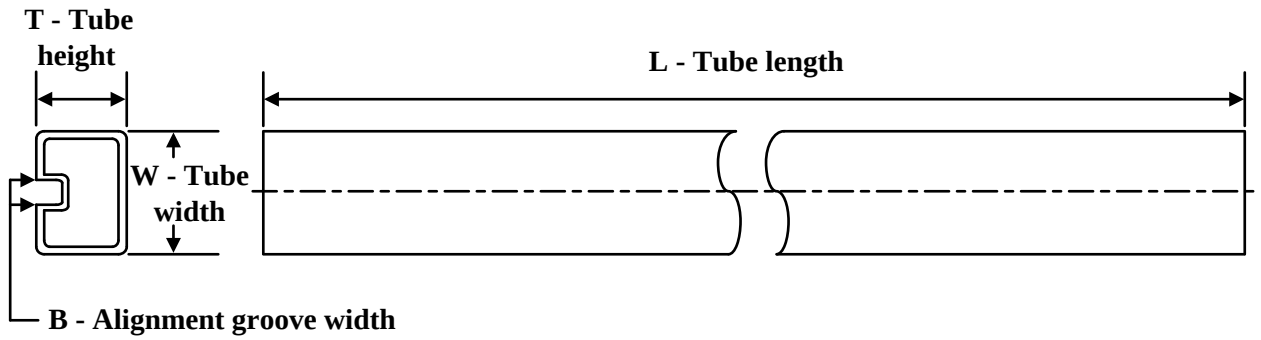

*All dimensions are nominal

Device	Package Name	Package Type	Pins	SPQ	L (mm)	W (mm)	T (µm)	B (mm)
5962-87609012A	FK	LCCC	20	55	506.98	12.06	2030	NA
5962-8760901DA	W	CFP	14	25	506.98	26.16	6220	NA
SN74AC04N	N	PDIP	14	25	506	13.97	11230	4.32
SN74AC04N	N	PDIP	14	25	506	13.97	11230	4.32
SN74AC04N.A	N	PDIP	14	25	506	13.97	11230	4.32
SN74AC04N.A	N	PDIP	14	25	506	13.97	11230	4.32
SN74AC04NE4	N	PDIP	14	25	506	13.97	11230	4.32
SN74AC04NE4	N	PDIP	14	25	506	13.97	11230	4.32
SNJ54AC04FK	FK	LCCC	20	55	506.98	12.06	2030	NA
SNJ54AC04FK.A	FK	LCCC	20	55	506.98	12.06	2030	NA
SNJ54AC04W	W	CFP	14	25	506.98	26.16	6220	NA
SNJ54AC04W.A	W	CFP	14	25	506.98	26.16	6220	NA

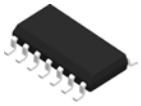

PACKAGE OUTLINE

D0014A

SOIC - 1.75 mm max height

SMALL OUTLINE INTEGRATED CIRCUIT

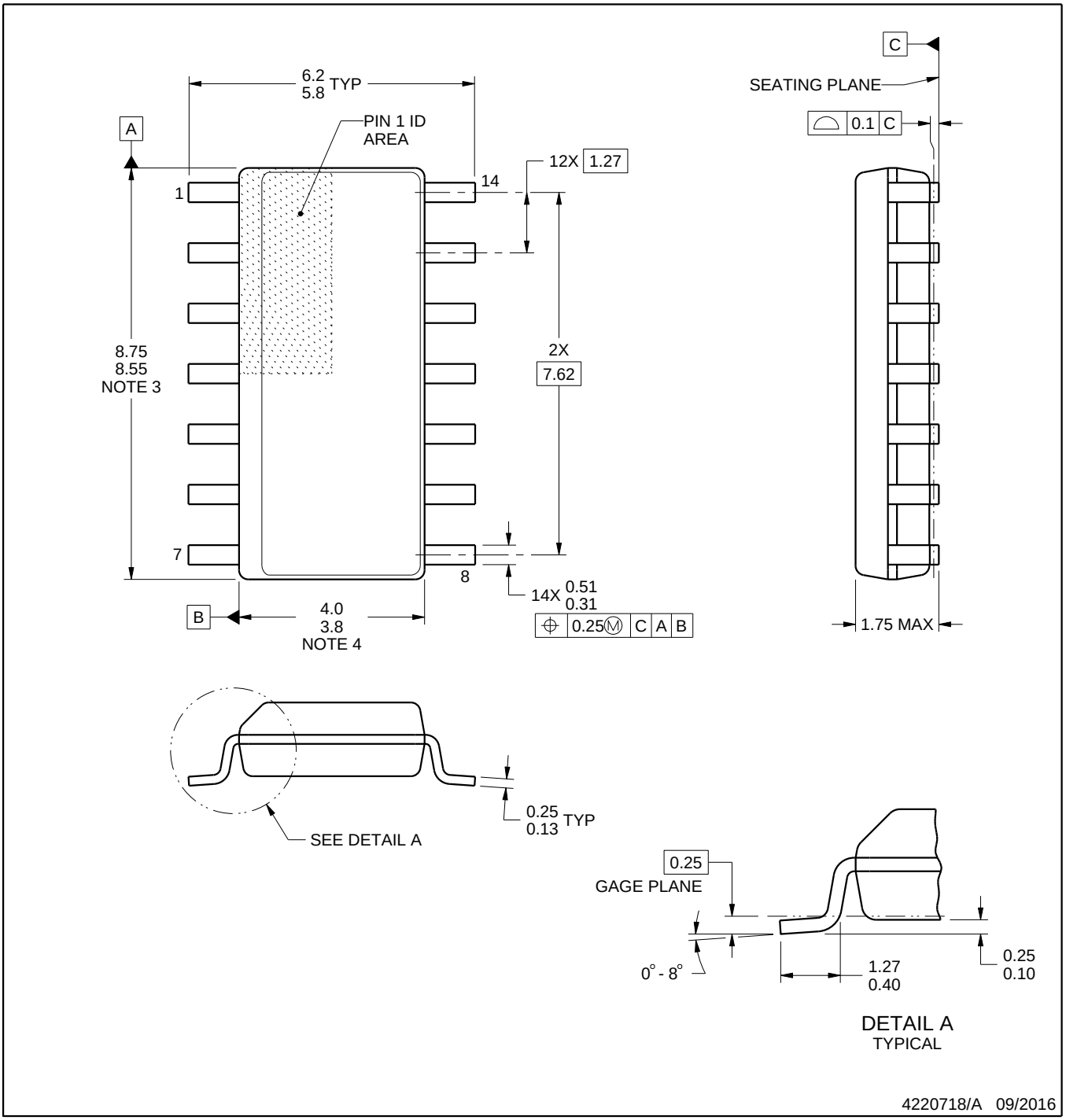

NOTES:

1. All linear dimensions are in millimeters. Dimensions in parenthesis are for reference only. Dimensioning and tolerancing per ASME Y14.5M.
2. This drawing is subject to change without notice.
3. This dimension does not include mold flash, protrusions, or gate burrs. Mold flash, protrusions, or gate burrs shall not exceed 0.15 mm, per side.
4. This dimension does not include interlead flash. Interlead flash shall not exceed 0.43 mm, per side.
5. Reference JEDEC registration MS-012, variation AB.

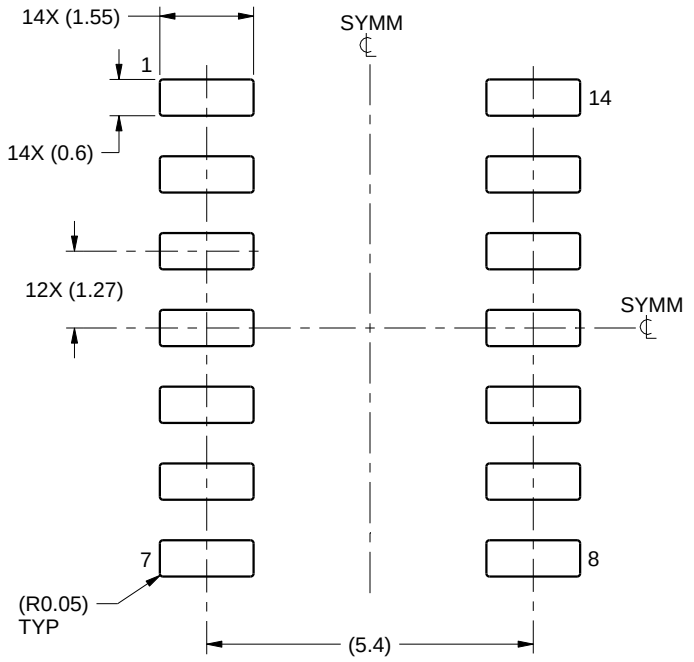

LAND PATTERN EXAMPLE
SCALE:8X

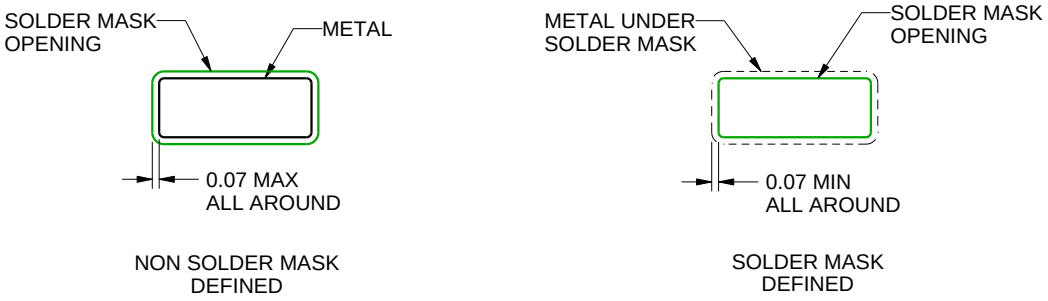

SOLDER MASK DETAILS

4220718/A 09/2016

NOTES: (continued)

6. Publication IPC-7351 may have alternate designs.
7. Solder mask tolerances between and around signal pads can vary based on board fabrication site.

EXAMPLE STENCIL DESIGN

D0014A

SOIC - 1.75 mm max height

SMALL OUTLINE INTEGRATED CIRCUIT

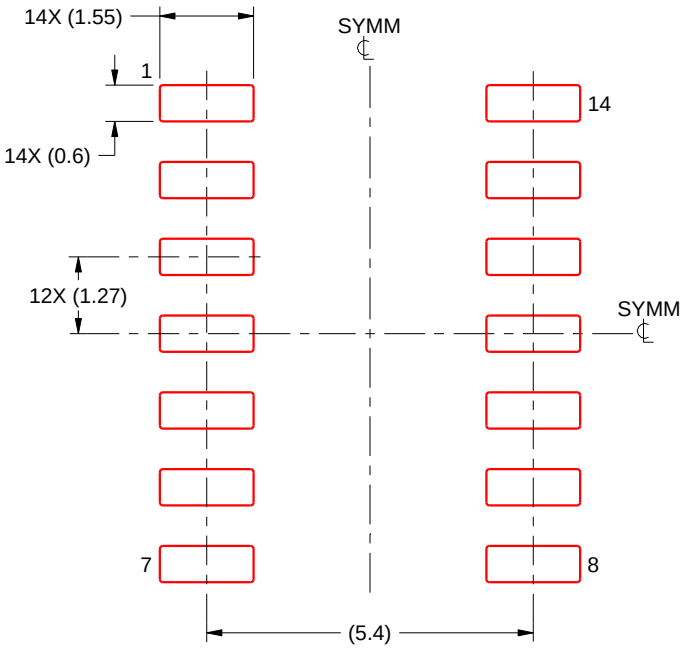

SOLDER PASTE EXAMPLE
BASED ON 0.125 mm THICK STENCIL
SCALE:8X

4220718/A 09/2016

NOTES: (continued)

8. Laser cutting apertures with trapezoidal walls and rounded corners may offer better paste release. IPC-7525 may have alternate design recommendations.
9. Board assembly site may have different recommendations for stencil design.

GENERIC PACKAGE VIEW

BQA 14

WQFN - 0.8 mm max height

2.5 x 3, 0.5 mm pitch

PLASTIC QUAD FLATPACK - NO LEAD

This image is a representation of the package family, actual package may vary.
Refer to the product data sheet for package details.

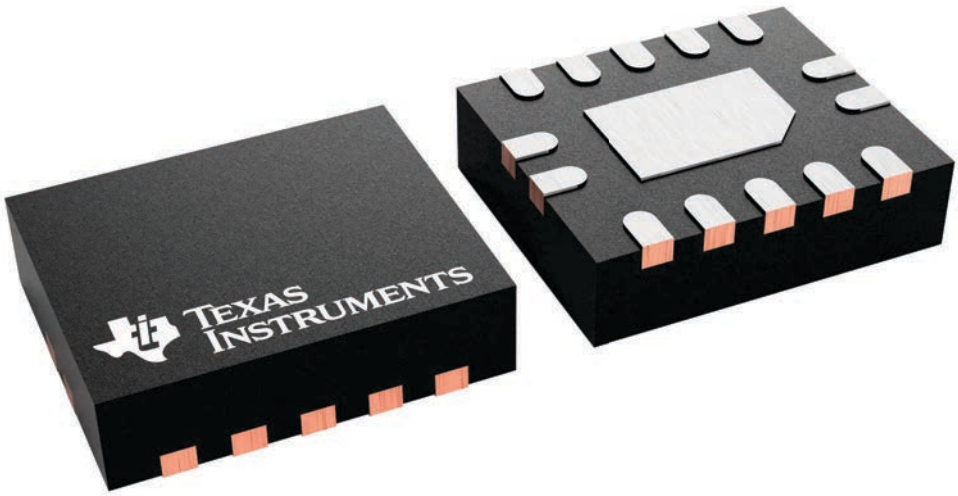

PACKAGE OUTLINE

BQA0014A

WQFN - 0.8 mm max height

PLASTIC QUAD FLAT PACK-NO LEAD

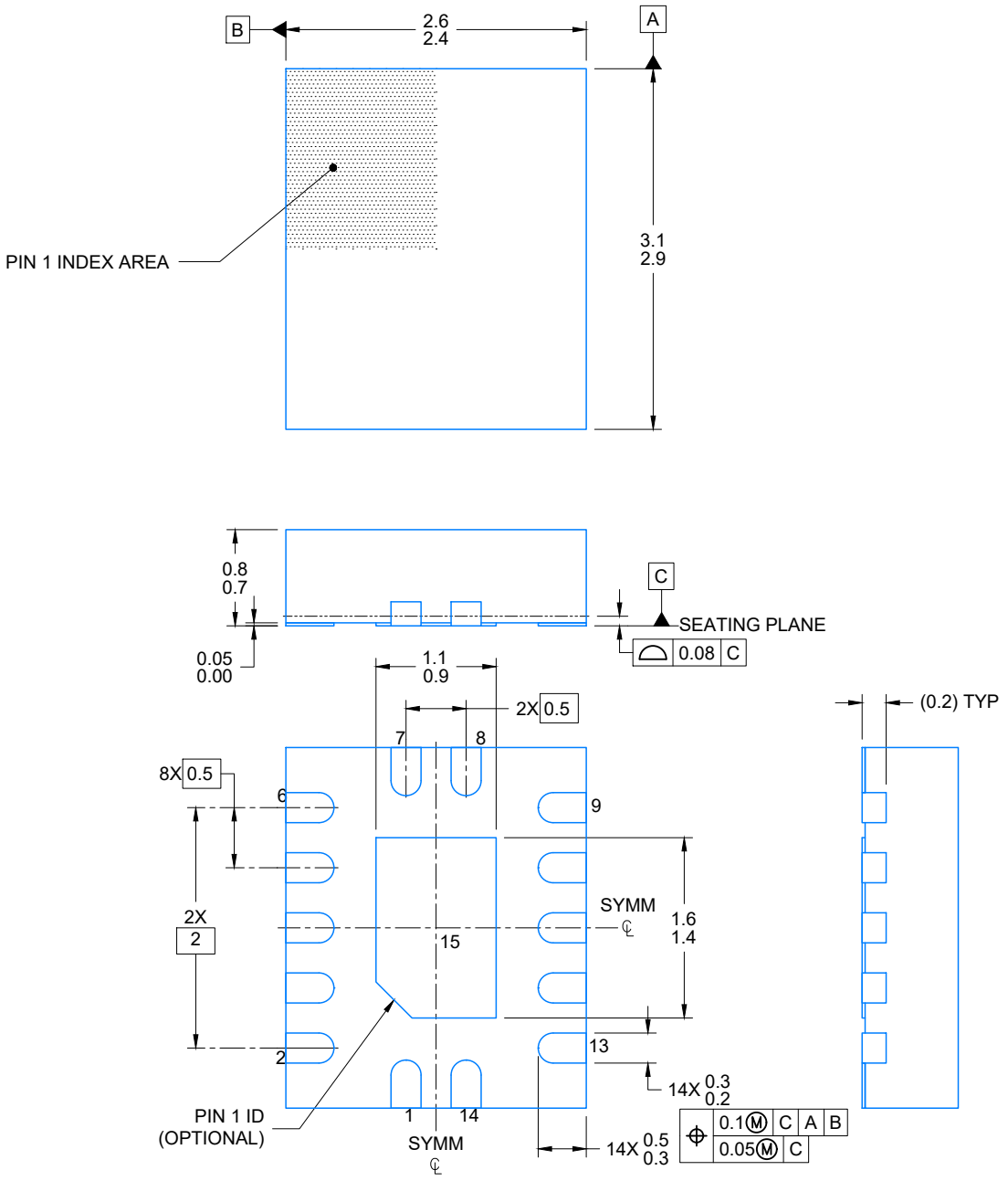

NOTES:

1. All linear dimensions are in millimeters. Any dimensions in parenthesis are for reference only. Dimensioning and tolerancing per ASME Y14.5M.
2. This drawing is subject to change without notice.
3. The package thermal pad must be soldered to the printed circuit board for optimal thermal and mechanical performance.

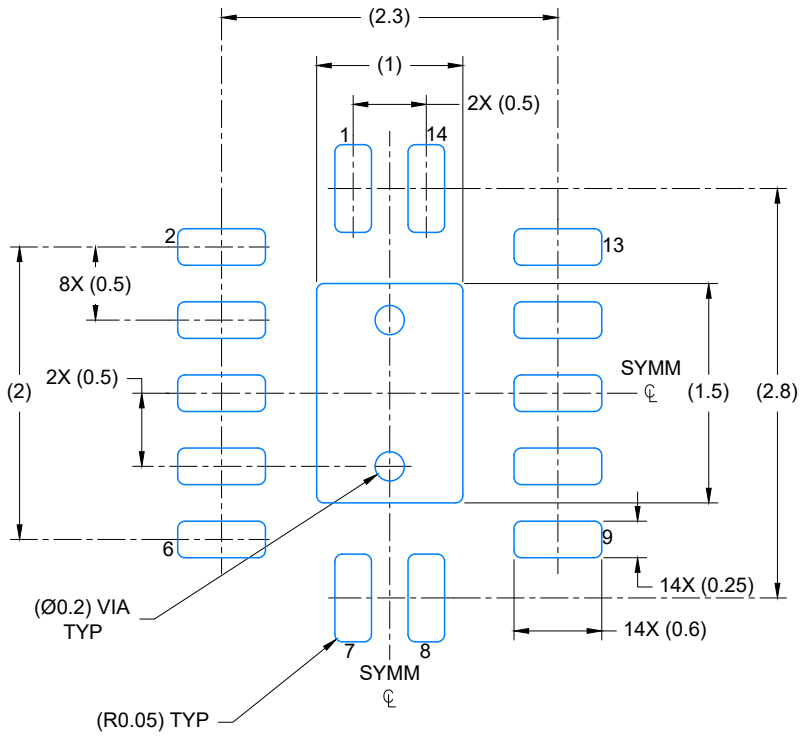

LAND PATTERN EXAMPLE
EXPOSED METAL SHOWN
SCALE: 20X

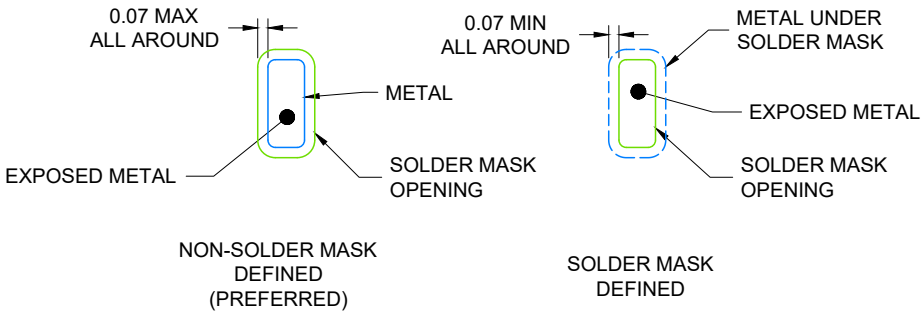

4224636/A 11/2018

NOTES: (continued)

4. This package is designed to be soldered to a thermal pad on the board. For more information, see Texas Instruments literature number SLUA271 (www.ti.com/lit/slua271).
5. Vias are optional depending on application, refer to device data sheet. If any vias are implemented, refer to their locations shown on this view. It is recommended that vias under paste be filled, plugged or tented.

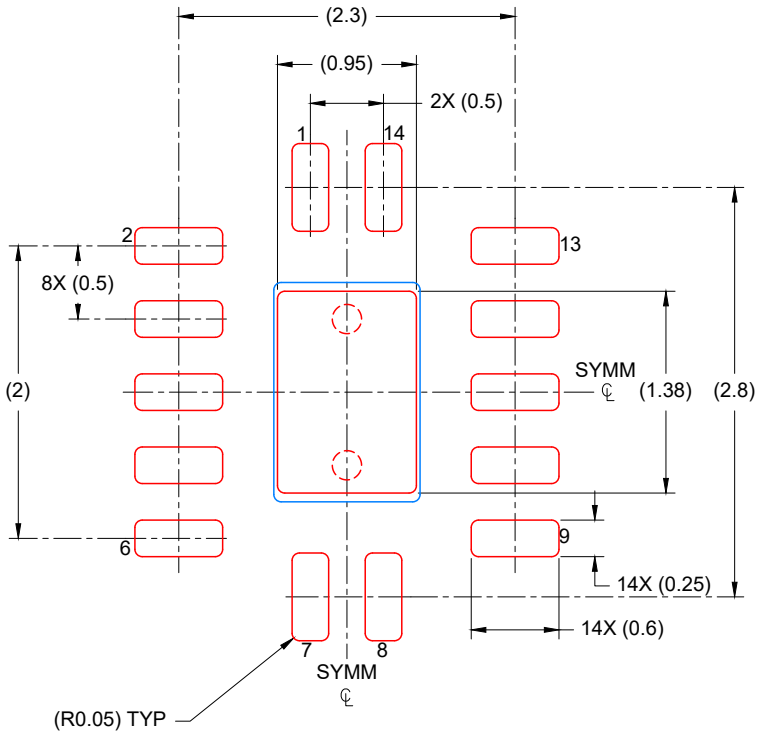

SOLDER PASTE EXAMPLE
BASED ON 0.125 mm THICK STENCIL

EXPOSED PAD
88% PRINTED COVERAGE BY AREA
SCALE: 20X

4224636/A 11/2018

NOTES: (continued)

6. Laser cutting apertures with trapezoidal walls and rounded corners may offer better paste release. IPC-7525 may have alternate design recommendations.

MECHANICAL DATA

NS (R-PDSO-G)** **PLASTIC SMALL-OUTLINE PACKAGE**

14-PINS SHOWN

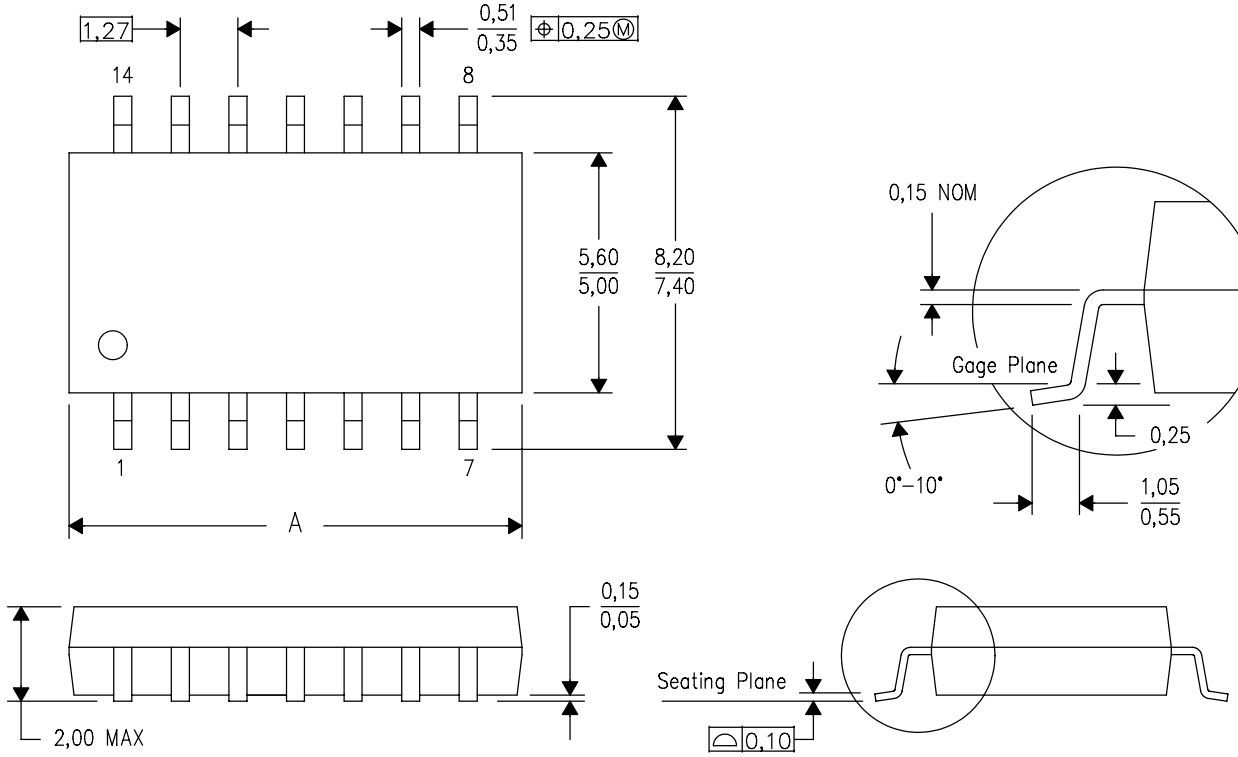

DIM \ PINS **	14	16	20	24
A MAX	10,50	10,50	12,90	15,30
A MIN	9,90	9,90	12,30	14,70

4040062/C 03/03

NOTES:
A. All linear dimensions are in millimeters.
B. This drawing is subject to change without notice.
C. Body dimensions do not include mold flash or protrusion, not to exceed 0,15.

W (R–GDFP–F14) CERAMIC DUAL FLATPACK

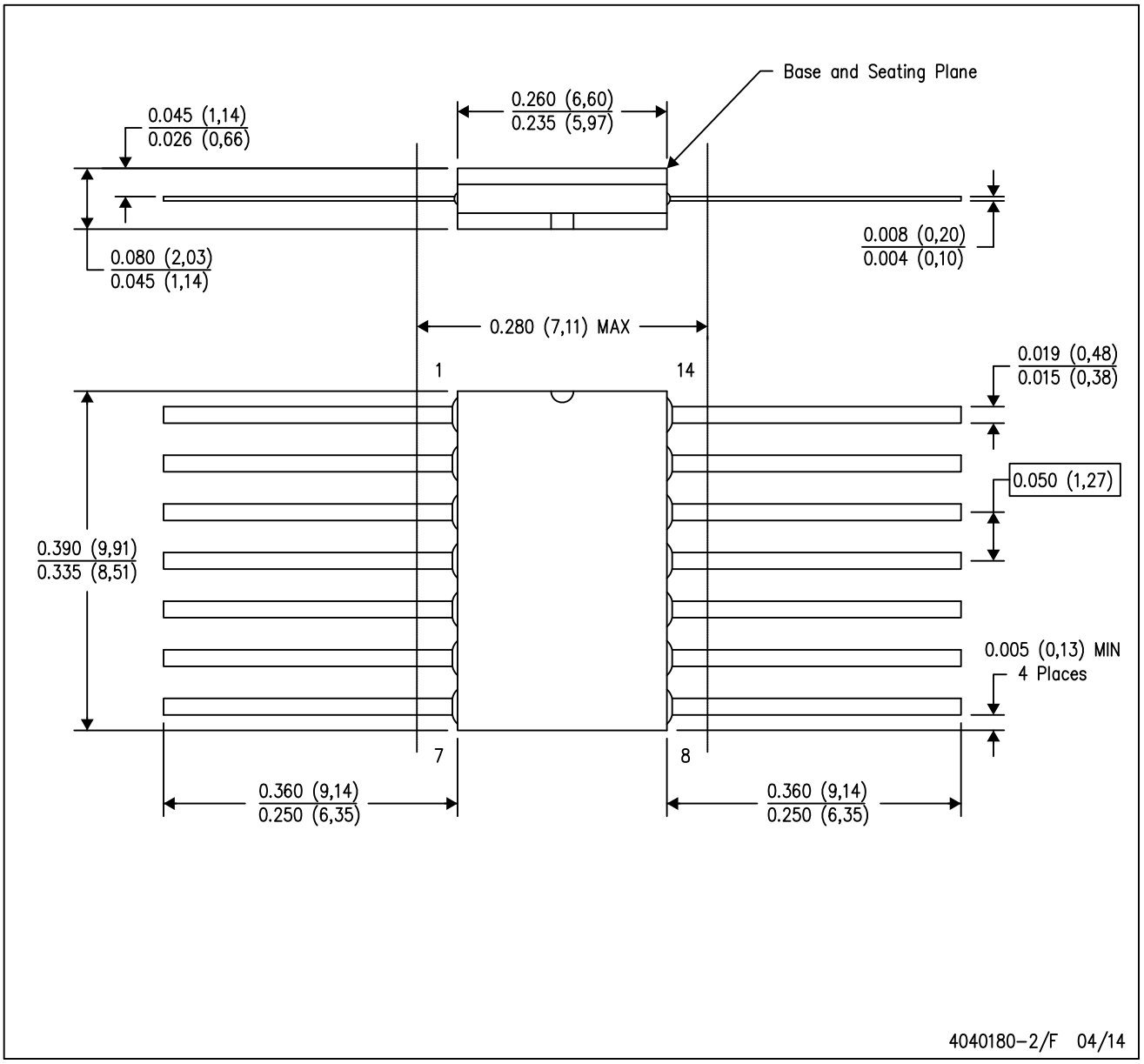

NOTES:
A. All linear dimensions are in inches (millimeters).
B. This drawing is subject to change without notice.
C. This package can be hermetically sealed with a ceramic lid using glass frit.
D. Index point is provided on cap for terminal identification only.
E. Falls within MIL STD 1835 GDFP1–F14

PACKAGE OUTLINE

DB0014A

SSOP - 2 mm max height

SMALL OUTLINE PACKAGE

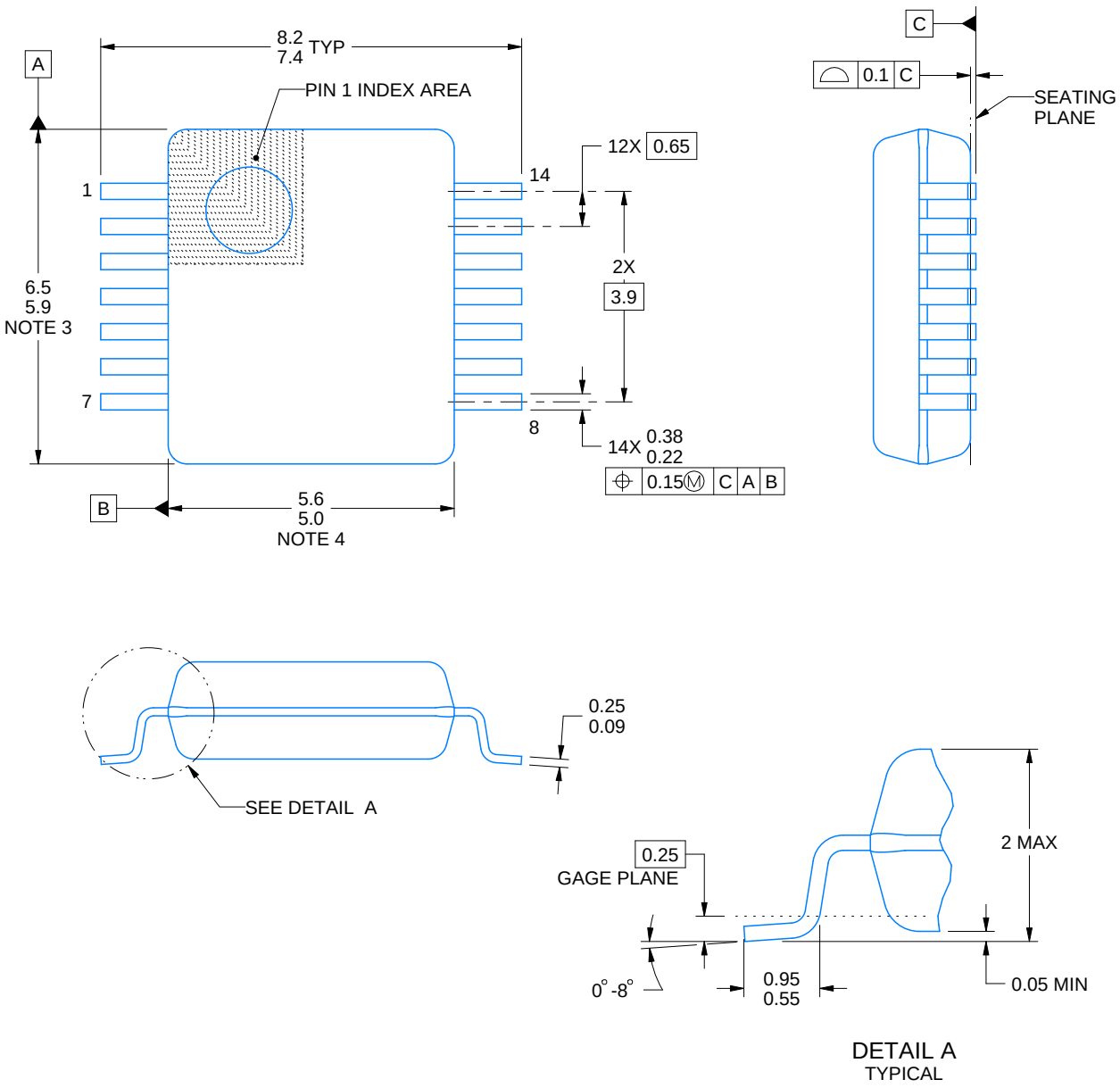

4220762/A 05/2024

NOTES:

1. All linear dimensions are in millimeters. Any dimensions in parenthesis are for reference only. Dimensioning and tolerancing per ASME Y14.5M.
2. This drawing is subject to change without notice.
3. This dimension does not include mold flash, protrusions, or gate burrs. Mold flash, protrusions, or gate burrs shall not exceed 0.15 mm per side.
4. Reference JEDEC registration MO-150.

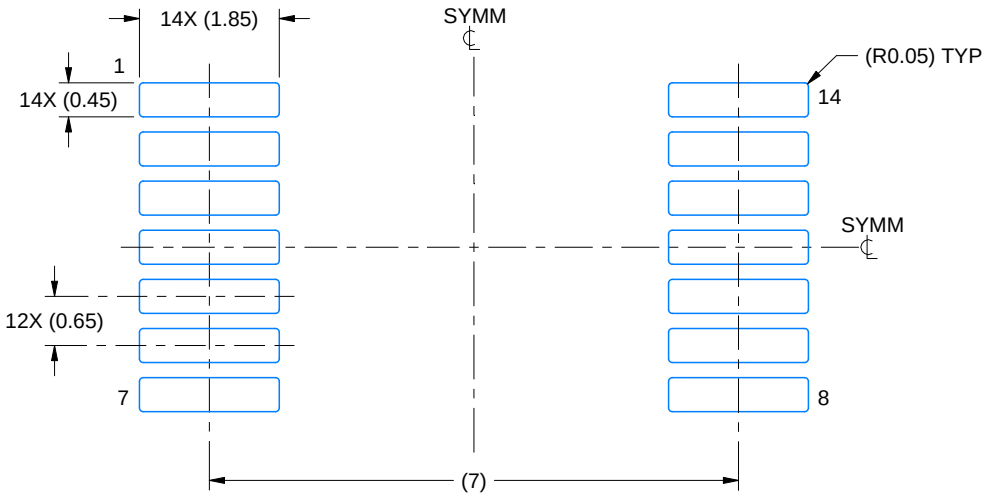

LAND PATTERN EXAMPLE
EXPOSED METAL SHOWN
SCALE: 10X

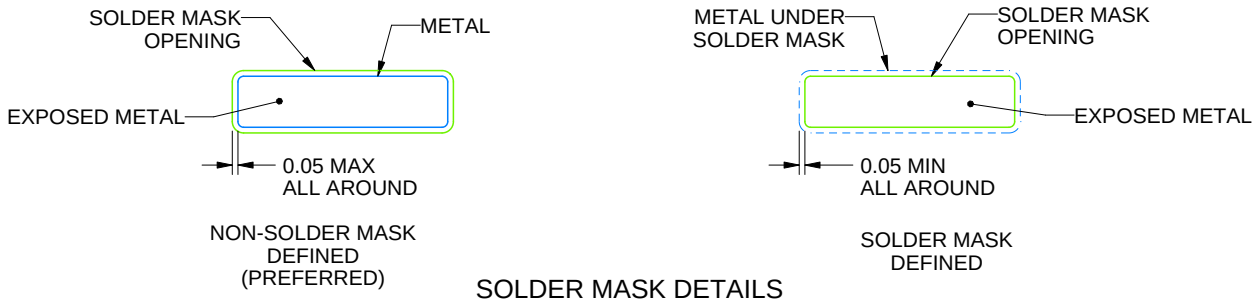

SOLDER MASK DETAILS

4220762/A 05/2024

NOTES: (continued)

5. Publication IPC-7351 may have alternate designs.
6. Solder mask tolerances between and around signal pads can vary based on board fabrication site.

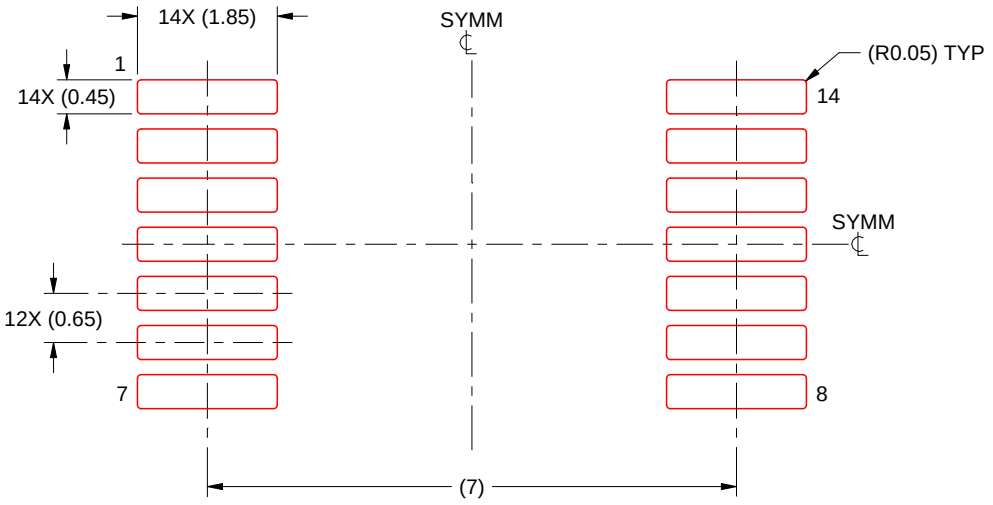

SOLDER PASTE EXAMPLE
BASED ON 0.125 mm THICK STENCIL
SCALE: 10X

4220762/A 05/2024

NOTES: (continued)

7. Laser cutting apertures with trapezoidal walls and rounded corners may offer better paste release. IPC-7525 may have alternate design recommendations.
8. Board assembly site may have different recommendations for stencil design.

GENERIC PACKAGE VIEW

FK 20

LCCC - 2.03 mm max height

8.89 x 8.89, 1.27 mm pitch

LEADLESS CERAMIC CHIP CARRIER

This image is a representation of the package family, actual package may vary.
Refer to the product data sheet for package details.

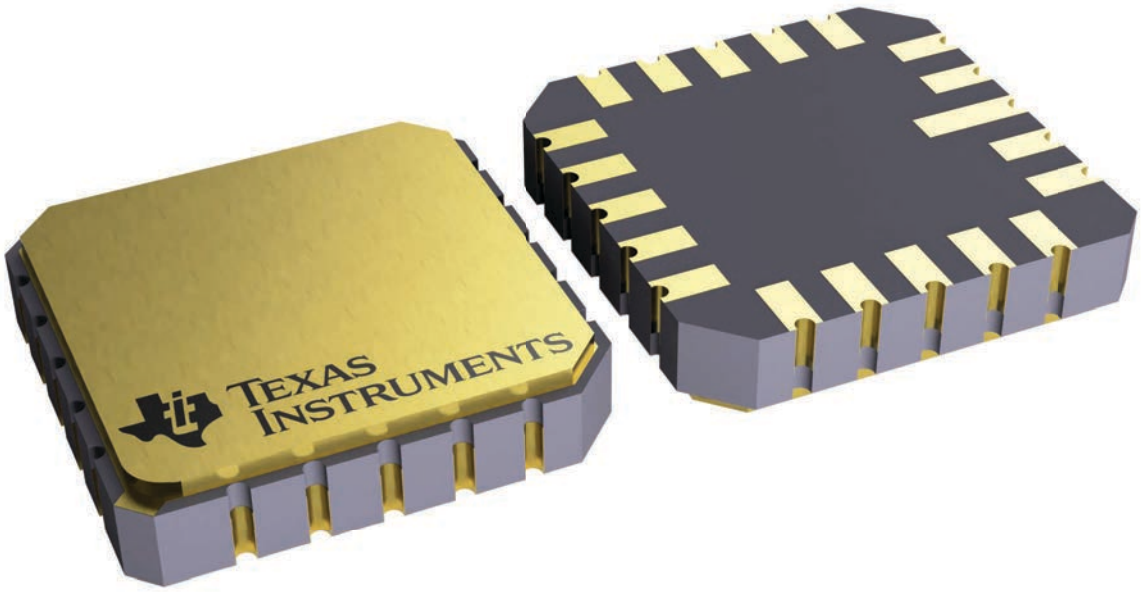

4229370VA\

GENERIC PACKAGE VIEW

J 14 CDIP - 5.08 mm max height

CERAMIC DUAL IN LINE PACKAGE

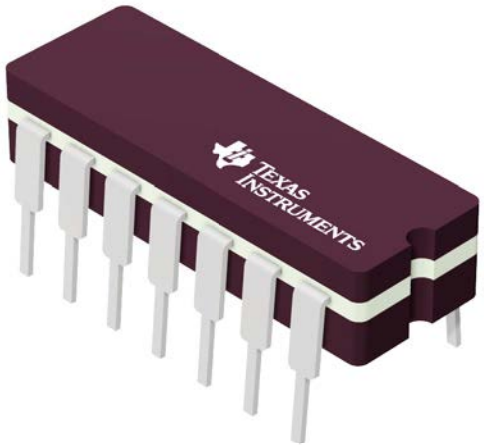

Images above are just a representation of the package family, actual package may vary.
Refer to the product data sheet for package details.

4040083-5/G



PACKAGE OUTLINE

J0014A

CDIP - 5.08 mm max height

CERAMIC DUAL IN LINE PACKAGE

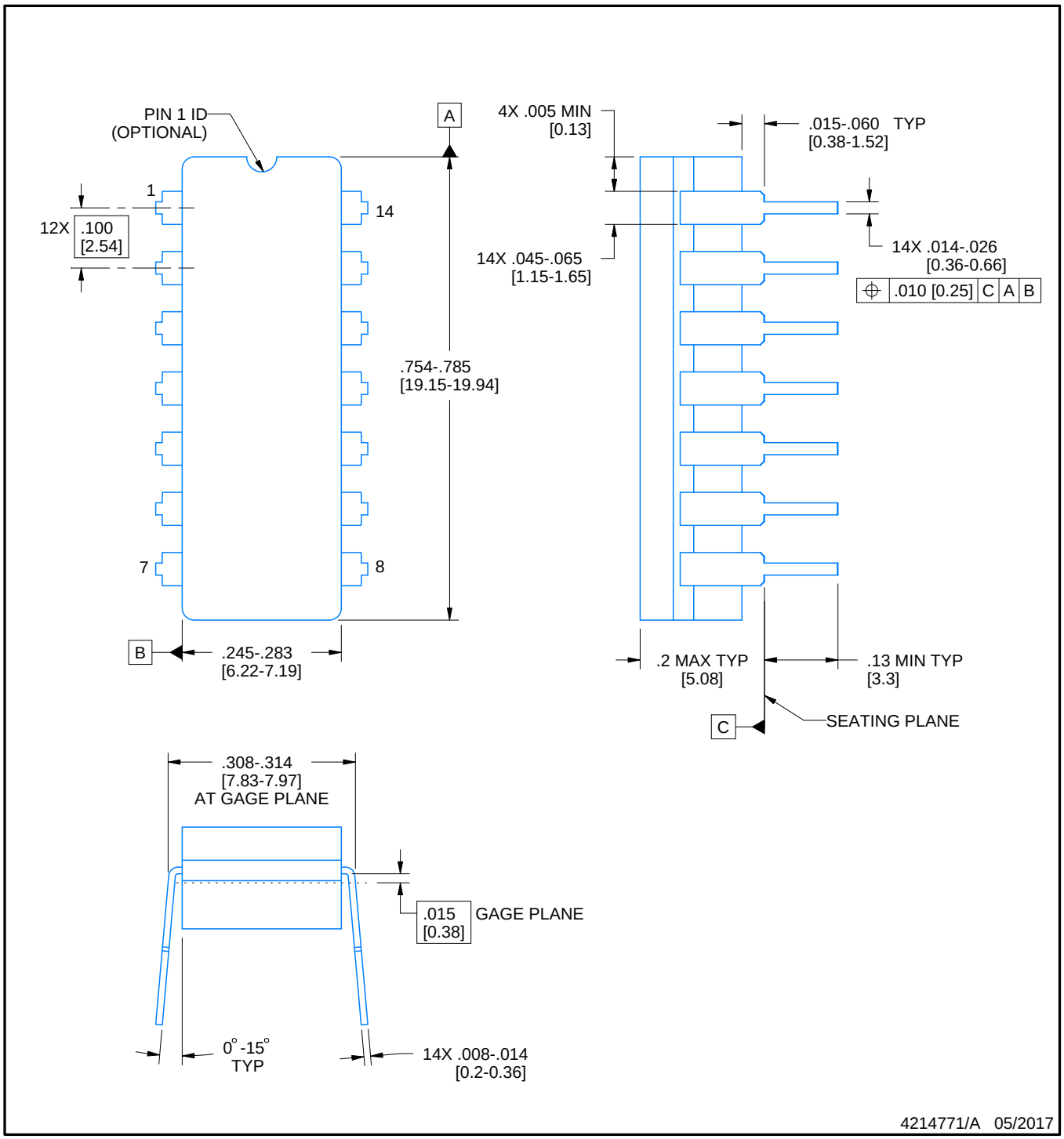

NOTES:

1. All controlling linear dimensions are in inches. Dimensions in brackets are in millimeters. Any dimension in brackets or parenthesis are for reference only. Dimensioning and tolerancing per ASME Y14.5M.
2. This drawing is subject to change without notice.
3. This package is hermitically sealed with a ceramic lid using glass frit.
4. Index point is provided on cap for terminal identification only and on press ceramic glass frit seal only.
5. Falls within MIL-STD-1835 and GDIP1-T14.

EXAMPLE BOARD LAYOUT

J0014A

CDIP - 5.08 mm max height

CERAMIC DUAL IN LINE PACKAGE

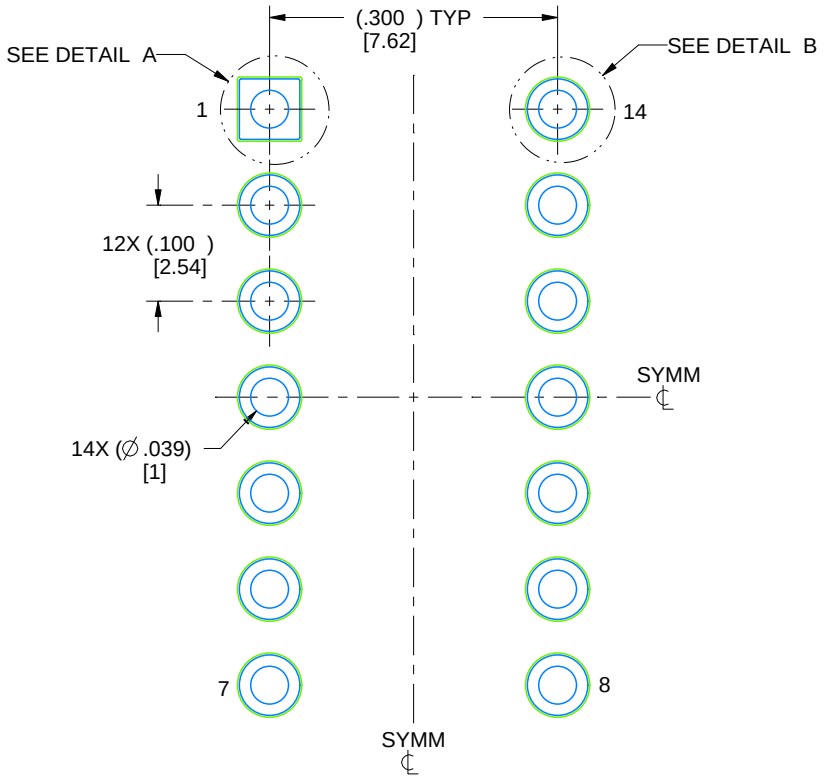

LAND PATTERN EXAMPLE
NON-SOLDER MASK DEFINED
SCALE: 5X

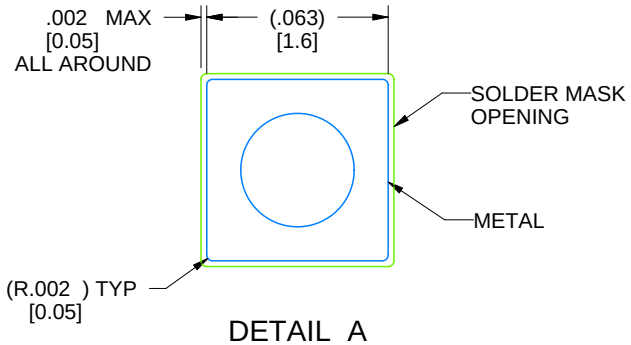

DETAIL A
SCALE: 15X

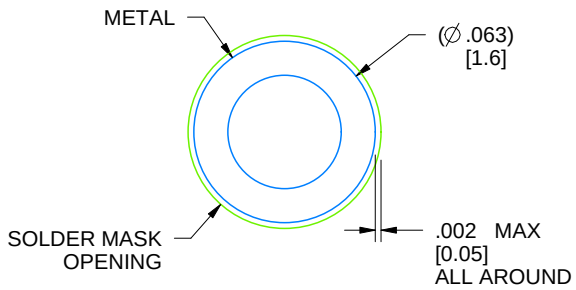

DETAIL B
13X, SCALE: 15X

4214771/A 05/2017

N (R–PDIP–T**)

PLASTIC DUAL–IN–LINE PACKAGE

16 PINS SHOWN

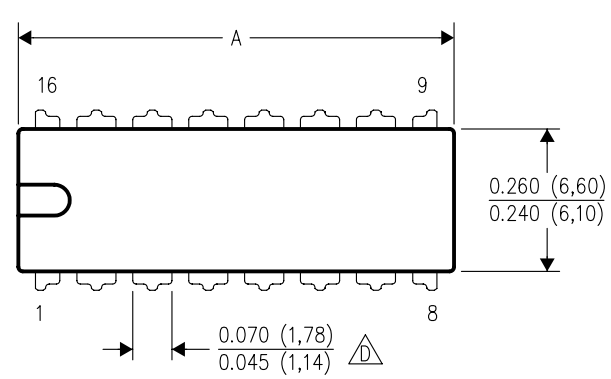

DIM \ PINS **	14	16	18	20
A MAX	0.775 (19,69)	0.775 (19,69)	0.920 (23,37)	1.060 (26,92)
A MIN	0.745 (18,92)	0.745 (18,92)	0.850 (21,59)	0.940 (23,88)
MS–001 VARIATION (C)	AA	BB	AC	AD

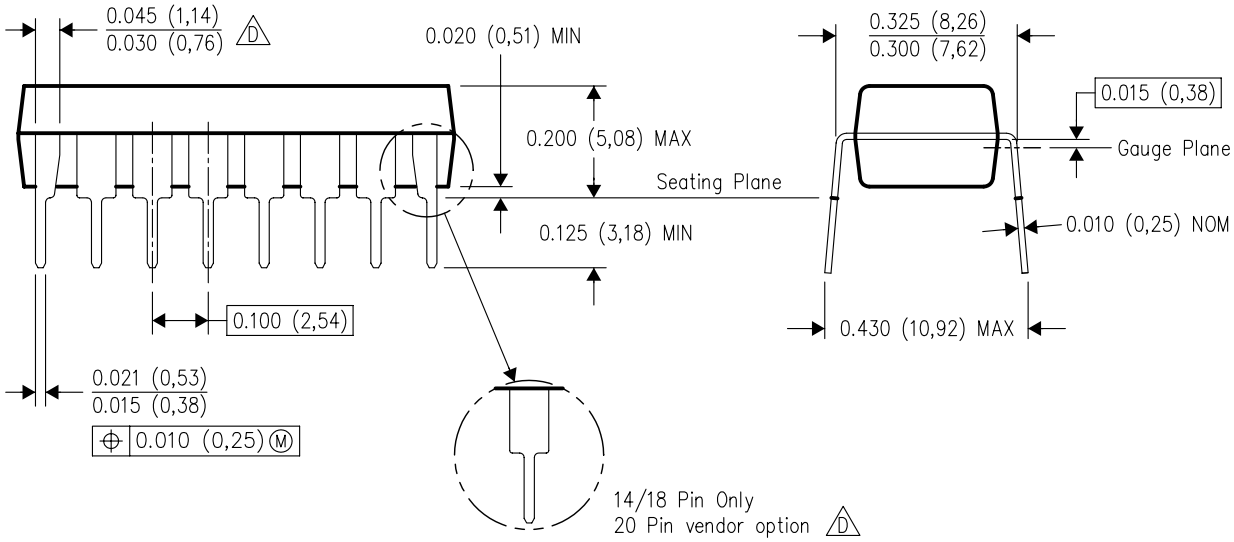

4040049/E 12/2002

NOTES:
A. All linear dimensions are in inches (millimeters).
B. This drawing is subject to change without notice.
C. Falls within JEDEC MS–001, except 18 and 20 pin minimum body length (Dim A).
D. The 20 pin end lead shoulder width is a vendor option, either half or full width.

PACKAGE OUTLINE

PW0014A

TSSOP - 1.2 mm max height

SMALL OUTLINE PACKAGE

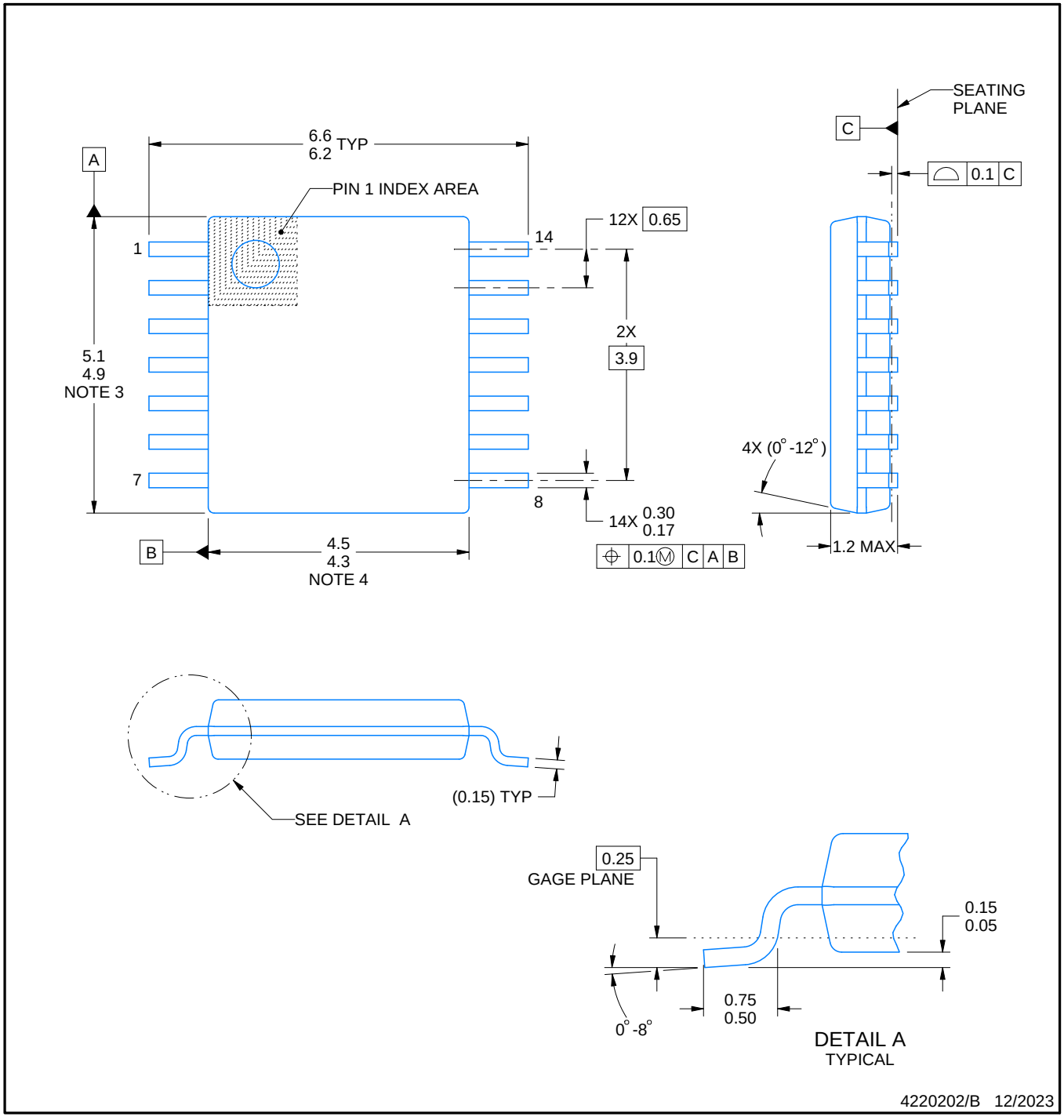

NOTES:

1. All linear dimensions are in millimeters. Any dimensions in parenthesis are for reference only. Dimensioning and tolerancing per ASME Y14.5M.
2. This drawing is subject to change without notice.
3. This dimension does not include mold flash, protrusions, or gate burrs. Mold flash, protrusions, or gate burrs shall not exceed 0.15 mm per side.
4. This dimension does not include interlead flash. Interlead flash shall not exceed 0.25 mm per side.
5. Reference JEDEC registration MO-153.

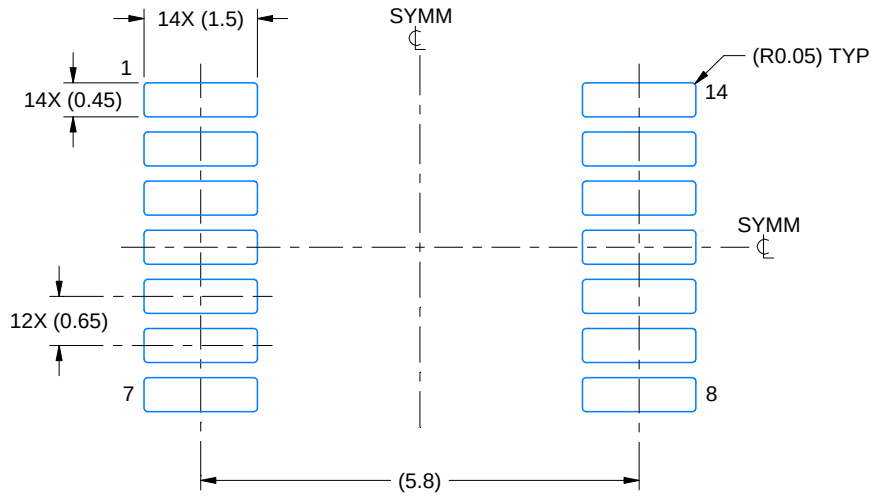

LAND PATTERN EXAMPLE
EXPOSED METAL SHOWN
SCALE: 10X

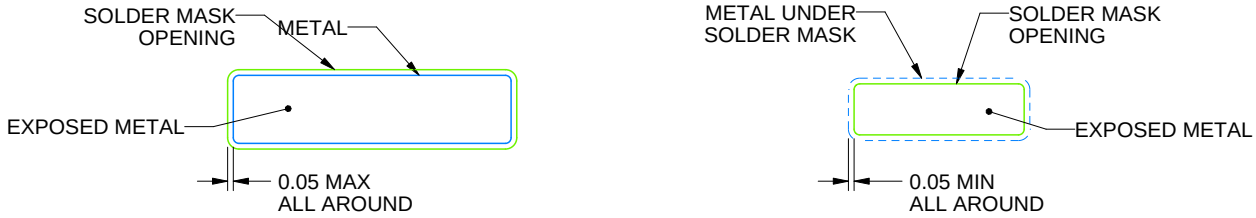

SOLDER MASK DETAILS

4220202/B 12/2023

NOTES: (continued)

6. Publication IPC-7351 may have alternate designs.
7. Solder mask tolerances between and around signal pads can vary based on board fabrication site.

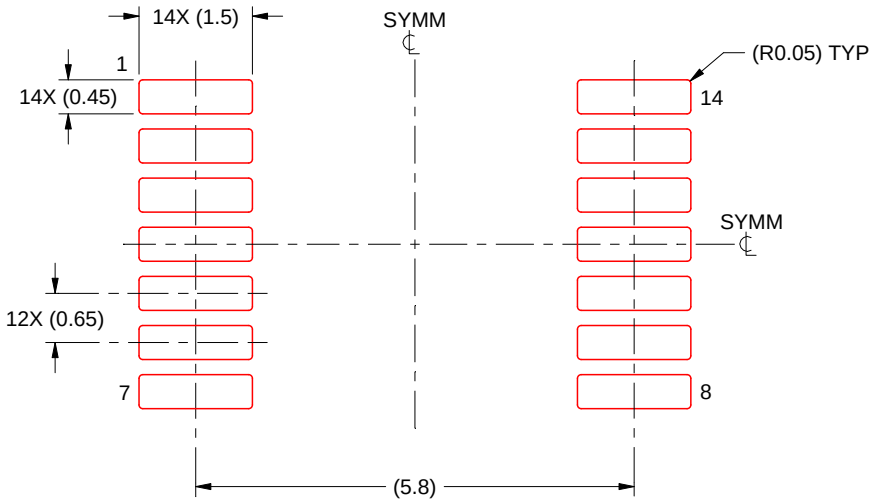

SOLDER PASTE EXAMPLE
BASED ON 0.125 mm THICK STENCIL
SCALE: 10X

4220202/B 12/2023

NOTES: (continued)

8. Laser cutting apertures with trapezoidal walls and rounded corners may offer better paste release. IPC-7525 may have alternate design recommendations.
9. Board assembly site may have different recommendations for stencil design.

重要なお知らせと免責事項

TI は、技術データと信頼性データ (データシートを含みます)、設計リソース (リファレンス デザインを含みます)、アプリケーションや設計に関する各種アドバイス、Web ツール、安全性情報、その他のリソースを、欠陥が存在する可能性のある「現状のまま」提供しており、商品性および特定目的に対する適合性の黙示保証、第三者の知的財産権の非侵害保証を含むいかなる保証も、明示的または黙示的にかかわらず拒否します。

これらのリソースは、TI 製品を使用する設計の経験を積んだ開発者への提供を意図したものです。(1) お客様のアプリケーションに適した TI 製品の選定、(2) お客様のアプリケーションの設計、検証、試験、(3) お客様のアプリケーションに該当する各種規格や、その他のあらゆる安全性、セキュリティ、規制、または他の要件への確実な適合に関する責任を、お客様のみが単独で負うものとします。

上記の各種リソースは、予告なく変更される可能性があります。これらのリソースは、リソースで説明されている TI 製品を使用するアプリケーションの開発の目的でのみ、TI はその使用をお客様に許諾します。これらのリソースに関して、他の目的で複製することや掲載することは禁止されています。TI や第三者の知的財産権のライセンスが付与されている訳ではありません。お客様は、これらのリソースを自身で使用した結果発生するあらゆる申し立て、損害、費用、損失、責任について、TI およびその代理人を完全に補償するものとし、TI は一切の責任を拒否します。

TI の製品は、 TI の販売条件 、 TI の総合的な品質ガイドライン 、 ti.com または TI 製品などに関連して提供される他の適用条件に従い提供されます。TI がこれらのリソースを提供することは、適用される TI の保証または他の保証の放棄の拡大や変更を意味するものではありません。 TI がカスタム、またはカスタマー仕様として明示的に指定していない限り、TI の製品は標準的なカタログに掲載される汎用機器です。

お客様がいかなる追加条項または代替条項を提案する場合も、TI はそれらに異議を唱え、拒否します。

Copyright © 2026, Texas Instruments Incorporated

最終更新日：2025 年 10 月