SN74AHC1G08 シングル 2 入力、正論理 AND ゲート

1 特長

- 動作範囲：2V ~ 5.5V
- 最大 t_{pd} 7ns (5V 時)
- 低消費電力、最大 I_{CC} 10µA
- ±8mA の出力駆動能力 (5V 時)
- 全入力でのシュミット・トリガ・アクションにより、低速の入力立ち上がり / 立ち下がり時間を許容
- JESD 17 準拠で 250mA 超のラッチアップ性能

2 アプリケーション

- バーコード・スキャナ
- ケーブル・ソリューション
- eBook (電子書籍)
- 組み込み用 PC
- フィールド・トランスミッタ：温度センサ、圧力センサ
- 指紋認証
- HVAC：暖房、換気、空調
- ネットワーク接続ストレージ (NAS)
- サーバーのマザーボードおよび PSU
- ソフトウェア定義無線 (SDR)
- テレビ：高解像度 (HDTV)、LCD、デジタル
- ビデオ通信システム
- ワイヤレス・データ・アクセス・カード、ヘッドセット、キーボード、マウス、LAN カード

3 概要

SN74AHC1G08 デバイスはシングル 2 入力正論理 AND ゲートです。デバイスは、ブール関数 Y = A ● B つまり、$Y = \overline{A + B}$ を正論理で実行します。

パッケージ情報

部品番号	パッケージ (1)	パッケージ・サイズ (2)	本体サイズ (3)
SN74AHC1G08	DBV (SOT-23、5)	2.9mm × 2.8mm	2.9mm × 1.6mm
	DCK (SC-70、5)	2mm × 2.1mm	2mm × 1.25mm
	DRL (SOT、5)	1.6mm × 1.6mm	1.6mm × 1.2mm

(1) 利用可能なすべてのパッケージについては、データシートの末尾にある注文情報を参照してください。
(2) パッケージ・サイズ (長さ × 幅) は公称値で、該当する場合はピンも含まれます。
(3) 本体サイズ (長さ×幅) は公称値であり、ピンは含まれません。



論理図 (正論理)

このリソースの元の言語は英語です。 翻訳は概要を便宜的に提供するもので、自動化ツール (機械翻訳) を使用していることがあり、TI では翻訳の正確性および妥当性につきましては一切保証いたしません。 実際の設計などの前には、ti.com で必ず最新の英語版をご参照くださいますようお願いいたします。

Table of Contents

1 特長 ... 1
2 アプリケーション ... 1
3 概要 ... 1
4 Pin Configuration and Functions ... 3
5 Specifications ... 4
5.1 Absolute Maximum Ratings ... 4
5.2 ESD Ratings ... 4
5.3 Recommended Operating Conditions ... 4
5.4 Thermal Information ... 5
5.5 Electrical Characteristics ... 5
5.6 Switching Characteristics, V_{CC} = 3.3 V ± 0.3 V ... 5
5.7 Switching Characteristics, V_{CC} = 5 V ± 0.5 V ... 6
5.8 Operating Characteristics ... 6
5.9 Typical Characteristics ... 6
6 Parameter Measurement Information ... 7
7 Detailed Description ... 8
7.1 Overview ... 8
7.2 Functional Block Diagram ... 8
7.3 Feature Description ... 8
7.4 Device Functional Modes ... 8
8 Application and Implementation ... 9
8.1 Application Information ... 9
8.2 Typical Application ... 9
8.3 Power Supply Recommendations ... 10
8.4 Layout ... 10
9 Device and Documentation Support ... 12
9.1 Documentation Support (Analog) ... 12
9.2 ドキュメントの更新通知を受け取る方法 ... 12
9.3 サポート・リソース ... 12
9.4 Trademarks ... 12
9.5 静電気放電に関する注意事項 ... 12
9.6 用語集 ... 12
10 Revision History ... 12
11 Mechanical, Packaging, and Orderable Information ... 13

Copyright © 2024 Texas Instruments Incorporated

4 Pin Configuration and Functions

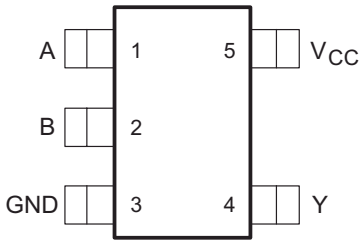

図 4-1. DBV Package 5-Pin SOT-23 Top View

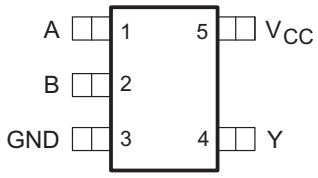

図 4-2. DCK Package 5-Pin SC70 Top View

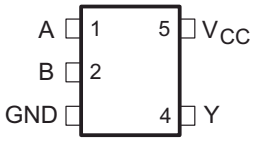

See mechanical drawings for dimensions (in *セクション 11*).

図 4-3. DRL Package 5-Pin SOT Top View

表 4-1. Pin Functions

PIN		TYPE(1)	DESCRIPTION
NO.	NAME		
1	A	I	Data Input
2	B	I	Data Input
3	GND	—	Ground
4	Y	O	Data Output
5	VCC	—	Power

(1) Signal Types: I = Input, O = Output, I/O = Input or Output

Copyright © 2024 Texas Instruments Incorporated

5 Specifications

5.1 Absolute Maximum Ratings

over operating free-air temperature range (unless otherwise noted)(1)

			MIN	MAX	UNIT
V_{CC}	Supply voltage		–0.5	7	V
V_I	Input voltage(2)		–0.5	7	V
V_O	Output voltage(2)		–0.5	V_{CC} + 0.5	V
I_{IK}	Input clamp current	V_I < 0		–20	mA
I_{OK}	Output clamp current	V_O < 0 or V_O > V_{CC}		±20	mA
I_O	Continuous output current	V_O = 0 to V_{CC}		±25	mA
	Continuous current through V_{CC} or GND			±50	mA
T_J	Junction temperature			150	°C
T_{stg}	Storage temperature		–65	150	°C

(1) Stresses beyond those listed under *Absolute Maximum Ratings* may cause permanent damage to the device. These are stress ratings only, and functional operation of the device at these or any other conditions beyond those indicated under *Recommended Operating Conditions* is not implied. Exposure to absolute-maximum-rated conditions for extended periods may affect device reliability.
(2) The input and output voltage ratings may be exceeded if the input and output current ratings are observed.

5.2 ESD Ratings

			VALUE	UNIT
$V_{(ESD)}$	Electrostatic discharge	Human body model (HBM), per ANSI/ESDA/JEDEC JS-001, all pins(1)	±2000	V
		Charged-device model (CDM), per JEDEC specification JESD22-C101, all pins(2)	±1000	

(1) JEDEC document JEP155 states that 500-V HBM allows safe manufacturing with a standard ESD control process.
(2) JEDEC document JEP157 states that 250-V CDM allows safe manufacturing with a standard ESD control process.

5.3 Recommended Operating Conditions

over operating free-air temperature range (unless otherwise noted)(1)

			MIN	MAX	UNIT
V_{CC}	Supply voltage		2	5.5	V
V_{IH}	High-level input voltage	V_{CC} = 2 V	1.5		V
		V_{CC} = 3 V	2.1		
		V_{CC} = 5.5 V	3.85		
V_{IL}	Low-level Input voltage	V_{CC} = 2 V		0.5	V
		V_{CC} = 3 V		0.9	
		V_{CC} = 5.5 V		1.65	
V_I	Input voltage		0	5.5	V
V_O	Output voltage		0	V_{CC}	V
I_{OH}	High-level output current	V_{CC} = 2 V		–50	µA
		V_{CC} = 3.3 V ± 0.3 V		–4	mA
		V_{CC} = 5 V ± 0.5 V		–8	
I_{OL}	Low-level output current	V_{CC} = 2 V		50	µA
		V_{CC} = 3.3 V ± 0.3 V		4	mA
		V_{CC} = 5 V ± 0.5 V		8	
Δt/Δv	Input transition rise or fall rate	V_{CC} = 3.3 V ± 0.3 V		100	ns/V
		V_{CC} = 5 V ± 0.5 V		20	

Copyright © 2024 Texas Instruments Incorporated

over operating free-air temperature range (unless otherwise noted)(1)

		MIN	MAX	UNIT
T_A	Operating free-air temperature	–55	125	°C

(1) All unused inputs of the device must be held at V_{CC} or GND to ensure proper device operation. Refer to the TI application report, *Implications of Slow or Floating CMOS Inputs*, SCBA004.

5.4 Thermal Information

THERMAL METRIC(1)		SN74AHC1G08			UNIT
		DBV (SOT-23)	DCK (SC70)	DRL (SOT)	
		5 PINS	5 PINS	5 PINS	
$R_{\theta JA}$	Junction-to-ambient thermal resistance	278	289.2	142	°C/W

(1) For more information about traditional and new thermal metrics, see the *Semiconductor and IC Package Thermal Metrics* application report, SPRA953.

5.5 Electrical Characteristics

over operating free-air temperature range (unless otherwise noted)

PARAMETER		TEST CONDITIONS	V_{CC}	T_A = 25°C			T_A = –55°C to 125°C		UNIT
				MIN	TYP	MAX	MIN	MAX	
V_{OH}	High level output voltage	I_{OH} = –50 µA	2 V	1.9	2		1.9		V
			3 V	2.9	3		2.9		
			4.5 V	4.4	4.5		4.4		
		I_{OH} = –4 mA	3 V	2.58			2.48		
		I_{OH} = –8 mA	4.5 V	3.94			3.8		
V_{OL}	Low level output voltage	I_{OL} = 50 µA	2 V			0.1		0.1	V
			3 V			0.1		0.1	
			4.5 V			0.1		0.1	
		I_{OL} = 4 mA	3 V			0.36		0.44	
		I_{OL} = 8 mA	4.5 V			0.36		0.44	
I_I	Input leakage current	V_I = 5.5 V or GND	0 V to 5.5 V			±0.1		±1	µA
I_{CC}	Supply current	V_I = V_{CC} or GND, I_O = 0	5.5 V			1		10	µA
C_i	Input Capacitance	V_I = V_{CC} or GND	5 V		4	10		10	pF

5.6 Switching Characteristics, V_{CC} = 3.3 V ± 0.3 V

over recommended operating free-air temperature range, V_{CC} = 3.3 V ± 0.3 V (unless otherwise noted) (see Load Circuit and Voltage Waveforms)

PARAMETER	FROM (INPUT)	TO (OUTPUT)	OUTPUT CAPACITANCE	T_A = 25°C			T_A = –40°C to 85°C		T_A = –55°C to 125°C		UNIT
				MIN	TYP	MAX	MIN	MAX	MIN	MAX	
t_{PLH}	A or B	Y	C_L = 15 pF		6.2	8.8	1	10.5	1	11	ns
t_{PHL}					6.2	8.8	1	10.5	1	11	
t_{PLH}	A or B	Y	C_L = 50 pF		8.7	12.3	1	14	1	14.5	ns
t_{PHL}					8.7	12.3	1	14	1	14.5	

Copyright © 2024 Texas Instruments Incorporated

5.7 Switching Characteristics, V_{CC} = 5 V ± 0.5 V

over recommended operating free-air temperature range, V_{CC} = 5 V ± 0.5 V (unless otherwise noted) (see Load Circuit and Voltage Waveforms)

PARAMETER	FROM (INPUT)	TO (OUTPUT)	OUTPUT CAPACITANCE	T_A = 25°C			T_A = –40°C to 85°C		T_A = –55°C to 125°C		UNIT
				MIN	TYP	MAX	MIN	MAX	MIN	MAX	
t_{PLH}	A or B	Y	C_L = 15 pF		4.3	5.9	1	7	1	7.5	ns
t_{PHL}					4.3	5.9	1	7	1	7.5	
t_{PLH}	A or B	Y	C_L = 50 pF		5.8	7.9	1	9	1	9.5	ns
t_{PHL}					5.8	7.9	1	9	1	9.5	

5.8 Operating Characteristics

V_{CC} = 5 V, T_A = 25°C

PARAMETER		TEST CONDITIONS		TYP	UNIT
C_{pd}	Power dissipation capacitance	No load,	f = 1 MHz	18	pF

5.9 Typical Characteristics

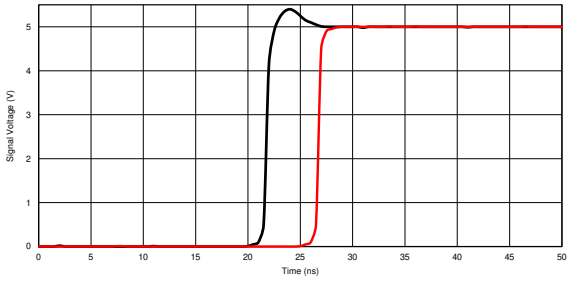

図 5-1. Response Time vs Output Voltage (T_A = 25°C, V_A = 5 V)

Copyright © 2024 Texas Instruments Incorporated

6 Parameter Measurement Information

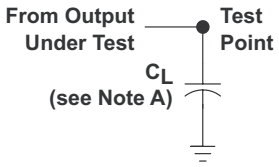

LOAD CIRCUIT FOR
TOTEM-POLE OUTPUTS

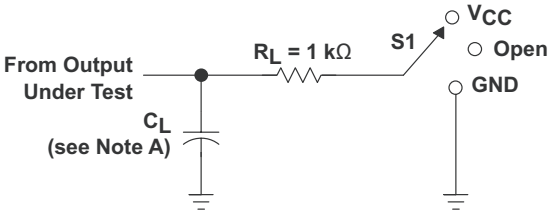

LOAD CIRCUIT FOR
3-STATE AND OPEN-DRAIN OUTPUTS

TEST	S1
t_{PLH}/t_{PHL}	Open
t_{PLZ}/t_{PZL}	V_{CC}
t_{PHZ}/t_{PZH}	GND
Open Drain	V_{CC}

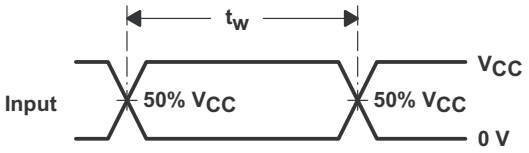

VOLTAGE WAVEFORMS
PULSE DURATION

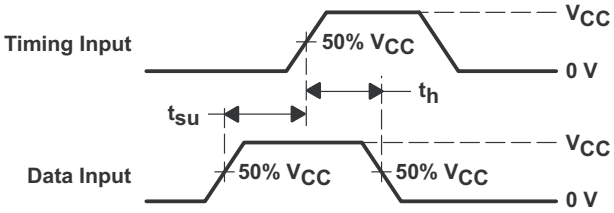

VOLTAGE WAVEFORMS
SETUP AND HOLD TIMES

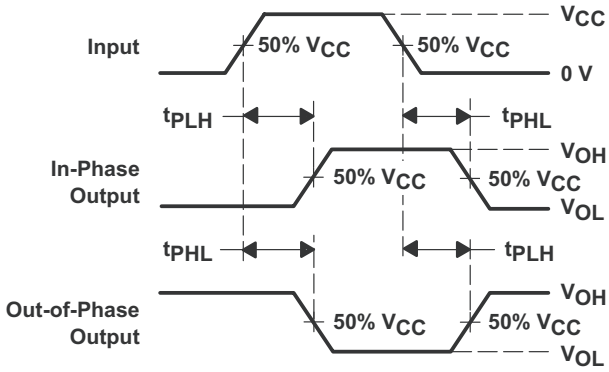

VOLTAGE WAVEFORMS
PROPAGATION DELAY TIMES
INVERTING AND NONINVERTING OUTPUTS

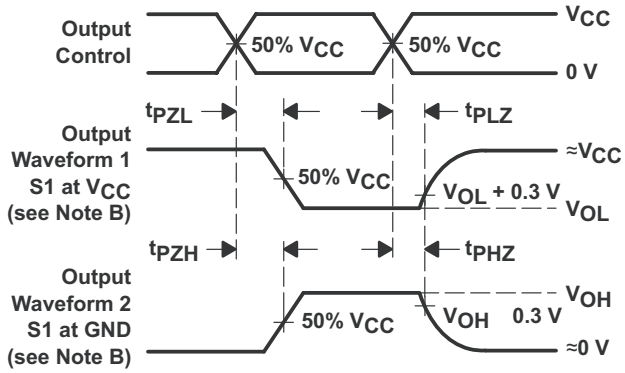

VOLTAGE WAVEFORMS
ENABLE AND DISABLE TIMES
LOW- AND HIGH-LEVEL ENABLING

A. C_L includes probe and jig capacitance.
B. Waveform 1 is for an output with internal conditions such that the output is low except when disabled by the output control.
Waveform 2 is for an output with internal conditions such that the output is high except when disabled by the output control.
C. All input pulses are supplied by generators having the following characteristics: PRR ≤ 1 MHz, Z_O = 50 Ω, t_r ≤ 3 ns, t_f ≤ 3 ns.
D. The outputs are measured one at a time with one input transition per measurement.
E. All parameters and waveforms are not applicable to all devices.

図 6-1. Load Circuit and Voltage Waveforms

Copyright © 2024 Texas Instruments Incorporated

7 Detailed Description

7.1 Overview

The SN74AHC1G08 device is a single 2-input positive-AND gate. The device performs the Boolean function Y = A ● B or Y = $\overline{A + B}$ in positive logic.

7.2 Functional Block Diagram



図 7-1. Logic Diagram (Positive Side)

7.3 Feature Description

The SN74AHC1G08 device has a wide operating V_{CC} range of 2 V to 5.5 V, which allows it to be used in a broad range of systems. The low propagation delay allows fast switching and higher operation speeds. In addition, the low-power consumption makes this device a good choice for portable and battery power-sensitive applications.

7.4 Device Functional Modes

表 7-1 lists the functional modes for SN74AHC1G08.

表 7-1. Function Table

INPUTS(1)		OUTPUT (2)
A	B	Y
H	H	H
L	X	L
X	L	L

(1) H = High Voltage Level, L = Low Voltage Level, X = Don't Care
(2) H = Driving High, L = Driving Low, Z = High Impedance State

Copyright © 2024 Texas Instruments Incorporated

8 Application and Implementation

注

以下のアプリケーション情報は、TI の製品仕様に含まれるものではなく、TI ではその正確性または完全性を保証いたしません。個々の目的に対する製品の適合性については、お客様の責任で判断していただくことになります。お客様は自身の設計実装を検証しテストすることで、システムの機能を確認する必要があります。

8.1 Application Information

A common application for AND gates is their use in power sequencing. Power sequencing is often employed in applications that require a processor or other delicate device with specific voltage timing requirements in order to protect the device from malfunctioning. Using the SN74AHC1G08 to verify that the processor has turned on can protect it from any harmful signals.

8.2 Typical Application

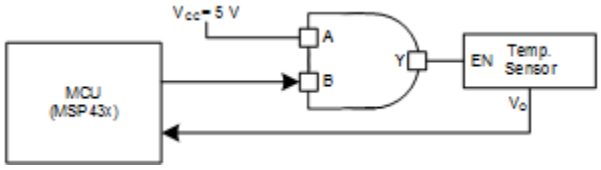

図 8-1. Power Sequencing Application

8.2.1 Design Requirements

The SN74AHC1G08 device uses CMOS technology and has balanced output drive. Take care to avoid bus contention because it can drive currents that would exceed maximum limits.

The SN74AHC1G08 allows switching control of analog and digital signals with a digital control signal. All input signals should remain as close to either 0 V or V_{CC} as possible for optimal operation.

8.2.2 Detailed Design Procedure

1. Recommended input conditions:
   - For rise time and fall time specifications, see Δt/Δv in the *セクション 5.3* table.
   - For specified high and low levels, see V_{IH} and V_{IL} in the *セクション 5.3* table.
   - Inputs and outputs are overvoltage tolerant and can therefore go as high as 5.5 V at any valid V_{CC}.
2. Recommended output conditions:
   - Load currents should not exceed ±50 mA.
3. Frequency selection criterion:
   - The effects of frequency upon the device's power consumption should be studied in *CMOS Power Consumption and CPD Calculation*, SCAA035.
   - Added trace resistance and capacitance can reduce maximum frequency capability; follow the layout practices listed in the *セクション 8.4* section.

8.2.3 Application Curves

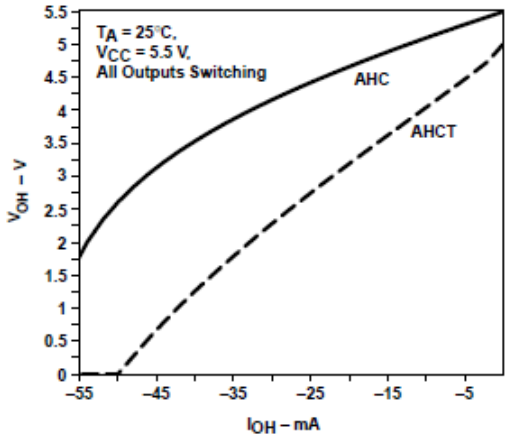

図 8-2. AHC Family V_{OH} vs I_{OH} at V_{CC} = 5.5 V

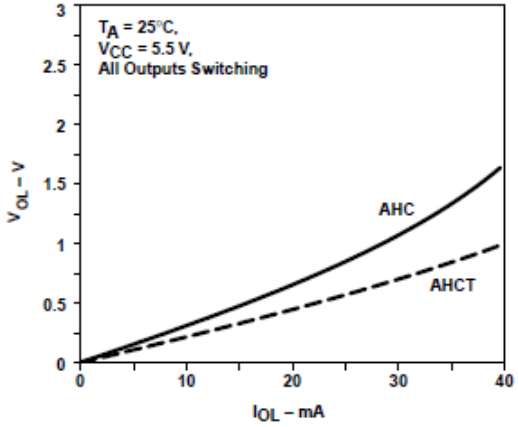

図 8-3. AHC Family V_{OL} vs I_{OL} at V_{CC} = 5.5 V

8.3 Power Supply Recommendations

The power supply can be any voltage between the minimum and maximum supply voltage rating listed in the *セクション 5.3* table.

Each V_{CC} terminal should have a bypass capacitor to prevent power disturbance. A 0.1-µF bypass capacitor is recommended for devices with a single supply. If multiple pins are labeled V_{CC}, then a 0.01-µF or 0.022-µF capacitor is recommended for each V_{CC} because the V_{CC} pins are tied together internally. For devices with dual-supply pins operating at different voltages, for example V_{CC} and V_{DD}, a 0.1-µF bypass capacitor is recommended for each supply pin. Use multiple bypass capacitors in parallel to reject different frequencies of noise. Capacitors with values of 0.1 µF and 1 µF are commonly used in parallel. The bypass capacitor should be installed as close to the power terminal as possible for best results.

8.4 Layout

8.4.1 Layout Guidelines

Reflections and matching are closely related to the loop antenna theory but are different enough to be discussed separately from the theory. When a PCB trace turns a corner at a 90° angle, a reflection can occur. A reflection occurs primarily because of the change of width of the trace. At the apex of the turn, the trace width increases to 1.414 times the width. This increase upsets the transmission-line characteristics, especially the distributed capacitance and self–inductance of the trace which results in the reflection. Not all PCB traces can be straight and therefore some traces must turn corners. 図 8-4 shows progressively better techniques of rounding corners. Only the last example (BEST) maintains constant trace width and minimizes reflections.

Copyright © 2024 Texas Instruments Incorporated

8.4.1.1 Layout Example

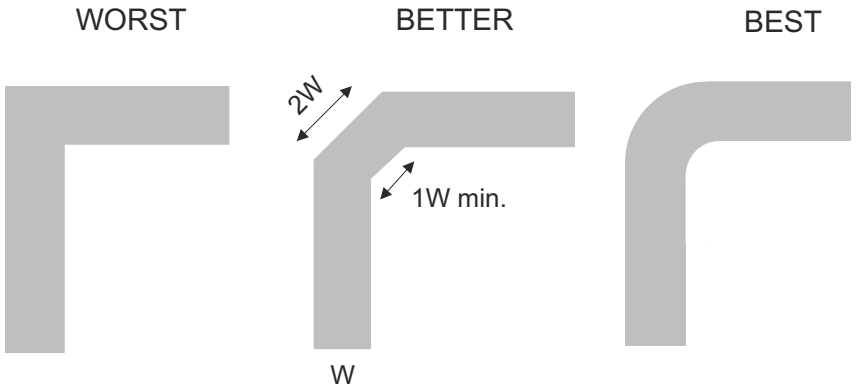

図 8-4. Trace Example

9 Device and Documentation Support

9.1 Documentation Support (Analog)

9.1.1 Related Documentation

For related documentation see the following:

- *Implications of Slow or Floating CMOS Inputs*, SCBA004
- *CMOS Power Consumption and CPD Calculation*, SCAA035
- *Selecting the Right Texas Instruments Signal Switch*, SZZA030

9.2 ドキュメントの更新通知を受け取る方法

ドキュメントの更新についての通知を受け取るには、www.tij.co.jp のデバイス製品フォルダを開いてください。[通知] をクリックして登録すると、変更されたすべての製品情報に関するダイジェストを毎週受け取ることができます。 変更の詳細については、改訂されたドキュメントに含まれている改訂履歴をご覧ください。

9.3 サポート・リソース

テキサス・インスツルメンツ E2E™ サポート・フォーラムは、エンジニアが検証済みの回答と設計に関するヒントを工キスパートから迅速かつ直接得ることができる場所です。既存の回答を検索したり、独自の質問をしたりすることで、設計で必要な支援を迅速に得ることができます。

リンクされているコンテンツは、各寄稿者により「現状のまま」提供されるものです。これらはテキサス・インスツルメンツの仕様を構成するものではなく、必ずしもテキサス・インスツルメンツの見解を反映したものではありません。テキサス・インスツルメンツの使用条件を参照してください。

9.4 Trademarks

テキサス・インスツルメンツ E2E™ is a trademark of Texas Instruments.
すべての商標は、それぞれの所有者に帰属します。

9.5 静電気放電に関する注意事項



この IC は、ESD によって破損する可能性があります。テキサス・インスツルメンツは、IC を取り扱う際には常に適切な注意を払うことを推奨します。正しい取り扱いおよび設置手順に従わない場合、デバイスを破損するおそれがあります。

ESD による破損は、わずかな性能低下からデバイスの完全な故障まで多岐にわたります。精密な IC の場合、パラメータがわずかに変化するだけで公表されている仕様から外れる可能性があるため、破損が発生しやすくなっています。

9.6 用語集

テキサス・インスツルメンツ用語集　この用語集には、用語や略語の一覧および定義が記載されています。

10 Revision History

資料番号末尾の英字は改訂を表しています。その改訂履歴は英語版に準じています。

Changes from Revision Q (October 2023) to Revision R (January 2024)	Page
• Updated RθJA values: DBV = 206 to 278, all values in °C/W	5

Changes from Revision P (March 2016) to Revision Q (October 2023)	Page
• ドキュメント全体にわたって表、図、相互参照の採番方法を更新	1
• Updated RθJA values: DCK = 252 to 289.2, all values in °C/W	5

Copyright © 2024 Texas Instruments Incorporated

11 Mechanical, Packaging, and Orderable Information

The following pages include mechanical, packaging, and orderable information. This information is the most current data available for the designated devices. This data is subject to change without notice and revision of this document. For browser based versions of this data sheet, refer to the left hand navigation.

Copyright © 2024 Texas Instruments Incorporated

PACKAGING INFORMATION

Orderable part number	Status (1)	Material type (2)	Package | Pins	Package qty | Carrier	RoHS (3)	Lead finish/ Ball material (4)	MSL rating/ Peak reflow (5)	Op temp (°C)	Part marking (6)
SN74AHC1G08DBV3	Obsolete	Production	SOT-23 (DBV) | 5	-	-	Call TI	Call TI	-55 to 125	A08Y
SN74AHC1G08DBVR	Active	Production	SOT-23 (DBV) | 5	3000 | LARGE T&R	Yes	SN	Level-1-260C-UNLIM	-55 to 125	(38EH, 3BVF, A083, A08G, A08J, A 08L, A08S)
SN74AHC1G08DBVR.A	Active	Production	SOT-23 (DBV) | 5	3000 | LARGE T&R	Yes	SN	Level-1-260C-UNLIM	-55 to 125	(38EH, 3BVF, A083, A08G, A08J, A 08L, A08S)
SN74AHC1G08DBVRE4	Active	Production	SOT-23 (DBV) | 5	3000 | LARGE T&R	Yes	NIPDAU	Level-1-260C-UNLIM	-55 to 125	A08G
SN74AHC1G08DBVRG4	Active	Production	SOT-23 (DBV) | 5	3000 | LARGE T&R	Yes	NIPDAU	Level-1-260C-UNLIM	-55 to 125	A08G
SN74AHC1G08DBVRG4.A	Active	Production	SOT-23 (DBV) | 5	3000 | LARGE T&R	Yes	NIPDAU	Level-1-260C-UNLIM	-55 to 125	A08G
SN74AHC1G08DBVT	Obsolete	Production	SOT-23 (DBV) | 5	-	-	Call TI	Call TI	-55 to 125	(A083, A08G, A08J, A08S)
SN74AHC1G08DBVTG4	Active	Production	SOT-23 (DBV) | 5	250 | SMALL T&R	Yes	NIPDAU	Level-1-260C-UNLIM	-55 to 125	A08G
SN74AHC1G08DBVTG4.A	Active	Production	SOT-23 (DBV) | 5	250 | SMALL T&R	Yes	NIPDAU	Level-1-260C-UNLIM	-55 to 125	A08G
SN74AHC1G08DCK3	Obsolete	Production	SC70 (DCK) | 5	-	-	Call TI	Call TI	-55 to 125	AEY
SN74AHC1G08DCK3.A	Obsolete	Production	SC70 (DCK) | 5	-	-	Call TI	Call TI	-55 to 125	AEY
SN74AHC1G08DCKR	Active	Production	SC70 (DCK) | 5	3000 | LARGE T&R	Yes	SN	Level-1-260C-UNLIM	-55 to 125	(1B9, AE3, AEG, AE J, AEL, AES)
SN74AHC1G08DCKR.A	Active	Production	SC70 (DCK) | 5	3000 | LARGE T&R	Yes	SN	Level-1-260C-UNLIM	-55 to 125	(1B9, AE3, AEG, AE J, AEL, AES)
SN74AHC1G08DCKRE4	Active	Production	SC70 (DCK) | 5	3000 | LARGE T&R	Yes	NIPDAU	Level-1-260C-UNLIM	-55 to 125	AE3
SN74AHC1G08DCKRG4	Active	Production	SC70 (DCK) | 5	3000 | LARGE T&R	Yes	NIPDAU	Level-1-260C-UNLIM	-55 to 125	AE3
SN74AHC1G08DCKRG4.A	Active	Production	SC70 (DCK) | 5	3000 | LARGE T&R	Yes	NIPDAU	Level-1-260C-UNLIM	-55 to 125	AE3
SN74AHC1G08DCKT	Obsolete	Production	SC70 (DCK) | 5	-	-	Call TI	Call TI	-55 to 125	(AE3, AEG, AEJ, AE S)
SN74AHC1G08DCKTE4	Active	Production	SC70 (DCK) | 5	250 | SMALL T&R	Yes	NIPDAU	Level-1-260C-UNLIM	-55 to 125	AE3
SN74AHC1G08DCKTG4	Active	Production	SC70 (DCK) | 5	250 | SMALL T&R	Yes	NIPDAU	Level-1-260C-UNLIM	-55 to 125	AE3
SN74AHC1G08DCKTG4.A	Active	Production	SC70 (DCK) | 5	250 | SMALL T&R	Yes	NIPDAU	Level-1-260C-UNLIM	-55 to 125	AE3
SN74AHC1G08DRLR	Active	Production	SOT-5X3 (DRL) | 5	4000 | LARGE T&R	Yes	NIPDAU | NIPDAUAG	Level-1-260C-UNLIM	-55 to 125	(AEB, AES)
SN74AHC1G08DRLR.A	Active	Production	SOT-5X3 (DRL) | 5	4000 | LARGE T&R	Yes	NIPDAUAG	Level-1-260C-UNLIM	-55 to 125	(AEB, AES)
SN74AHC1G08DRLRG4	Active	Production	SOT-5X3 (DRL) | 5	4000 | LARGE T&R	Yes	NIPDAUAG	Level-1-260C-UNLIM	-55 to 125	(AEB, AES)

(1) **Status:** For more details on status, see our product life cycle.

(2) **Material type:** When designated, preproduction parts are prototypes/experimental devices, and are not yet approved or released for full production. Testing and final process, including without limitation quality assurance, reliability performance testing, and/or process qualification, may not yet be complete, and this item is subject to further changes or possible discontinuation. If available for ordering, purchases will be subject to an additional waiver at checkout, and are intended for early internal evaluation purposes only. These items are sold without warranties of any kind.

(3) **RoHS values:** Yes, No, RoHS Exempt. See the TI RoHS Statement for additional information and value definition.

(4) **Lead finish/Ball material:** Parts may have multiple material finish options. Finish options are separated by a vertical ruled line. Lead finish/Ball material values may wrap to two lines if the finish value exceeds the maximum column width.

(5) **MSL rating/Peak reflow:** The moisture sensitivity level ratings and peak solder (reflow) temperatures. In the event that a part has multiple moisture sensitivity ratings, only the lowest level per JEDEC standards is shown. Refer to the shipping label for the actual reflow temperature that will be used to mount the part to the printed circuit board.

(6) **Part marking:** There may be an additional marking, which relates to the logo, the lot trace code information, or the environmental category of the part.

Multiple part markings will be inside parentheses. Only one part marking contained in parentheses and separated by a "~" will appear on a part. If a line is indented then it is a continuation of the previous line and the two combined represent the entire part marking for that device.

Important Information and Disclaimer: The information provided on this page represents TI's knowledge and belief as of the date that it is provided. TI bases its knowledge and belief on information provided by third parties, and makes no representation or warranty as to the accuracy of such information. Efforts are underway to better integrate information from third parties. TI has taken and continues to take reasonable steps to provide representative and accurate information but may not have conducted destructive testing or chemical analysis on incoming materials and chemicals. TI and TI suppliers consider certain information to be proprietary, and thus CAS numbers and other limited information may not be available for release.

In no event shall TI's liability arising out of such information exceed the total purchase price of the TI part(s) at issue in this document sold by TI to Customer on an annual basis.

OTHER QUALIFIED VERSIONS OF SN74AHC1G08 :

- Automotive : SN74AHC1G08-Q1

NOTE: Qualified Version Definitions:

- Automotive - Q100 devices qualified for high-reliability automotive applications targeting zero defects

TAPE AND REEL INFORMATION

REEL DIMENSIONS

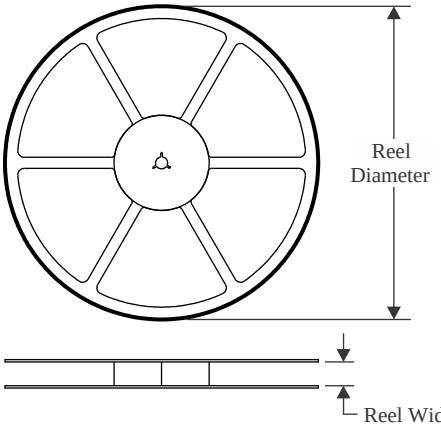

TAPE DIMENSIONS

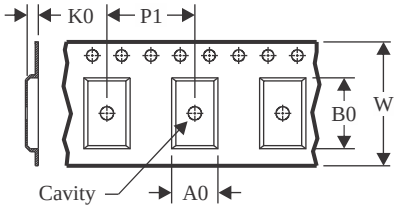

A0	Dimension designed to accommodate the component width
B0	Dimension designed to accommodate the component length
K0	Dimension designed to accommodate the component thickness
W	Overall width of the carrier tape
P1	Pitch between successive cavity centers

QUADRANT ASSIGNMENTS FOR PIN 1 ORIENTATION IN TAPE

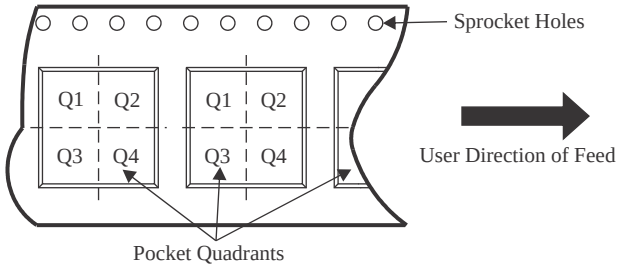

*All dimensions are nominal

Device	Package Type	Package Drawing	Pins	SPQ	Reel Diameter (mm)	Reel Width W1 (mm)	A0 (mm)	B0 (mm)	K0 (mm)	P1 (mm)	W (mm)	Pin1 Quadrant
SN74AHC1G08DBVR	SOT-23	DBV	5	3000	180.0	8.4	3.2	3.2	1.4	4.0	8.0	Q3
SN74AHC1G08DBVR	SOT-23	DBV	5	3000	180.0	8.4	3.2	3.2	1.4	4.0	8.0	Q3
SN74AHC1G08DBVRG4	SOT-23	DBV	5	3000	178.0	9.0	3.23	3.17	1.37	4.0	8.0	Q3
SN74AHC1G08DBVTG4	SOT-23	DBV	5	250	178.0	9.0	3.23	3.17	1.37	4.0	8.0	Q3
SN74AHC1G08DCKR	SC70	DCK	5	3000	178.0	9.0	2.4	2.5	1.2	4.0	8.0	Q3
SN74AHC1G08DCKR	SC70	DCK	5	3000	180.0	8.4	2.3	2.55	1.2	4.0	8.0	Q3
SN74AHC1G08DCKRG4	SC70	DCK	5	3000	178.0	9.2	2.4	2.4	1.22	4.0	8.0	Q3
SN74AHC1G08DCKTG4	SC70	DCK	5	250	178.0	9.2	2.4	2.4	1.22	4.0	8.0	Q3
SN74AHC1G08DRLR	SOT-5X3	DRL	5	4000	180.0	9.5	1.78	1.78	0.69	4.0	8.0	Q3
SN74AHC1G08DRLR	SOT-5X3	DRL	5	4000	180.0	8.4	1.98	1.78	0.69	4.0	8.0	Q3

TAPE AND REEL BOX DIMENSIONS

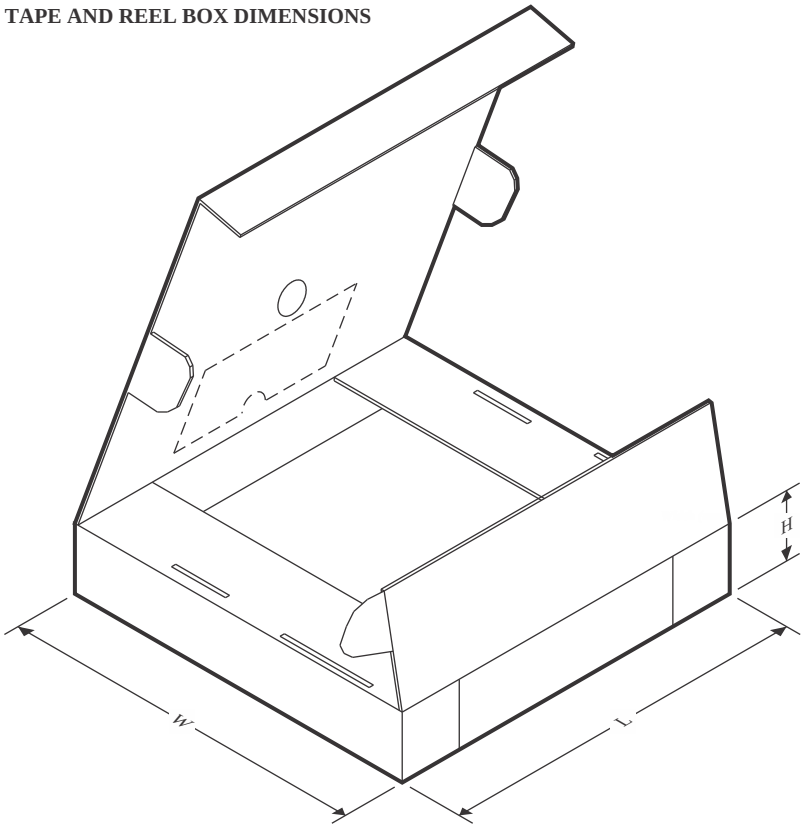

*All dimensions are nominal

Device	Package Type	Package Drawing	Pins	SPQ	Length (mm)	Width (mm)	Height (mm)
SN74AHC1G08DBVR	SOT-23	DBV	5	3000	210.0	185.0	35.0
SN74AHC1G08DBVR	SOT-23	DBV	5	3000	210.0	185.0	35.0
SN74AHC1G08DBVRG4	SOT-23	DBV	5	3000	180.0	180.0	18.0
SN74AHC1G08DBVTG4	SOT-23	DBV	5	250	180.0	180.0	18.0
SN74AHC1G08DCKR	SC70	DCK	5	3000	180.0	180.0	18.0
SN74AHC1G08DCKR	SC70	DCK	5	3000	210.0	185.0	35.0
SN74AHC1G08DCKRG4	SC70	DCK	5	3000	180.0	180.0	18.0
SN74AHC1G08DCKTG4	SC70	DCK	5	250	180.0	180.0	18.0
SN74AHC1G08DRLR	SOT-5X3	DRL	5	4000	184.0	184.0	19.0
SN74AHC1G08DRLR	SOT-5X3	DRL	5	4000	202.0	201.0	28.0

PACKAGE OUTLINE

DCK0005A

SOT - 1.1 max height

SMALL OUTLINE TRANSISTOR

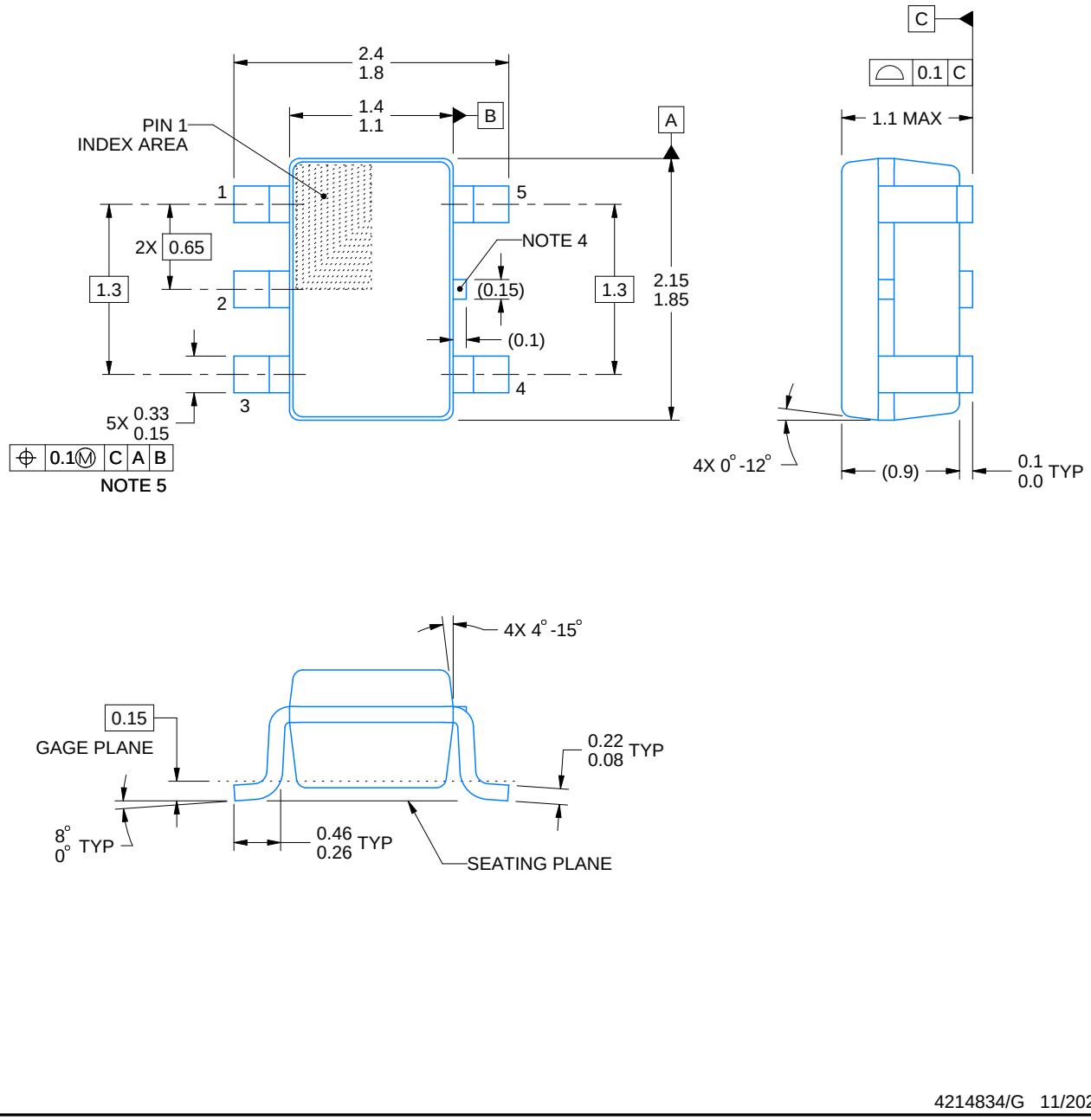

4214834/G 11/2024

NOTES:

1. All linear dimensions are in millimeters. Any dimensions in parenthesis are for reference only. Dimensioning and tolerancing per ASME Y14.5M.
2. This drawing is subject to change without notice.
3. Refernce JEDEC MO-203.
4. Support pin may differ or may not be present.
5. Lead width does not comply with JEDEC.
6. Body dimensions do not include mold flash, protrusions, or gate burrs. Mold flash, protrusions, or gate burrs shall not exceed 0.25mm per side

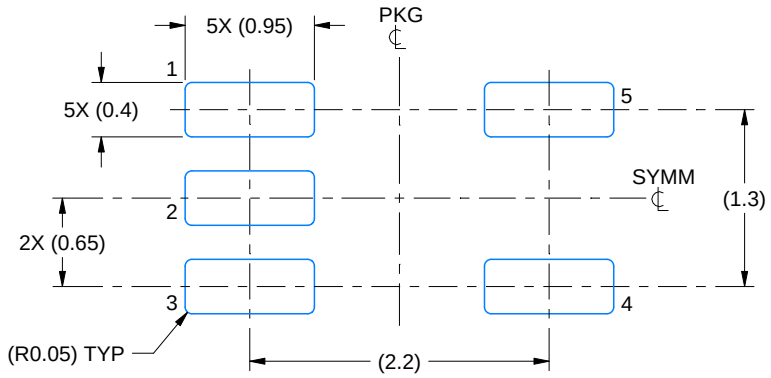

LAND PATTERN EXAMPLE
EXPOSED METAL SHOWN
SCALE:18X

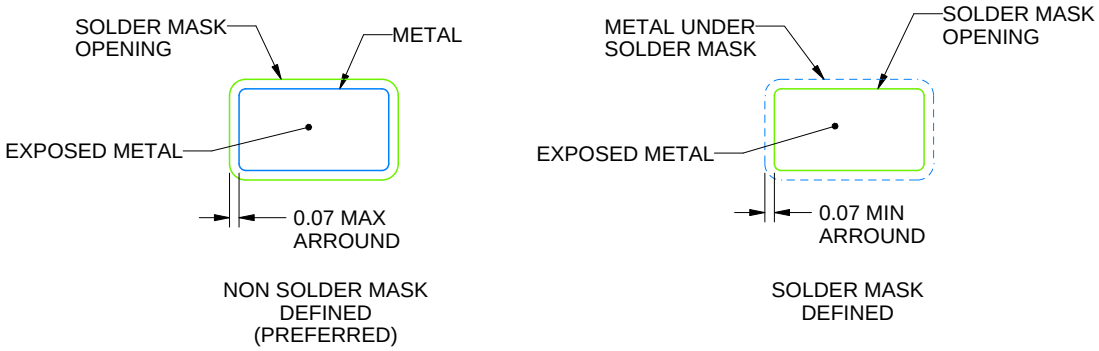

SOLDER MASK DETAILS

4214834/G 11/2024

NOTES: (continued)

7. Publication IPC-7351 may have alternate designs.
8. Solder mask tolerances between and around signal pads can vary based on board fabrication site.

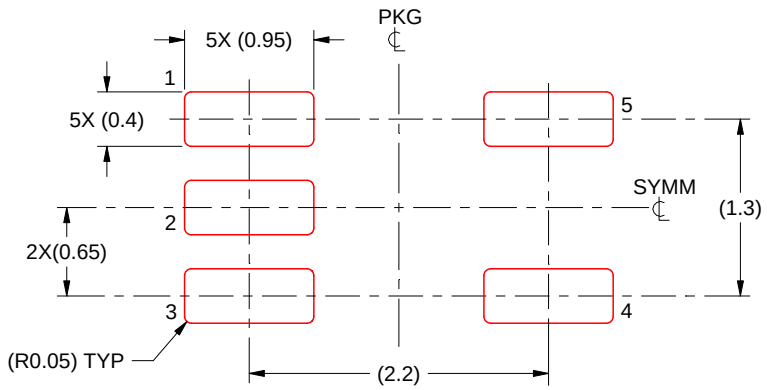

SOLDER PASTE EXAMPLE
BASED ON 0.125 THICK STENCIL
SCALE:18X

4214834/G 11/2024

NOTES: (continued)

9. Laser cutting apertures with trapezoidal walls and rounded corners may offer better paste release. IPC-7525 may have alternate design recommendations.
10. Board assembly site may have different recommendations for stencil design.

PACKAGE OUTLINE

DBV0005A

SOT-23 - 1.45 mm max height

SMALL OUTLINE TRANSISTOR

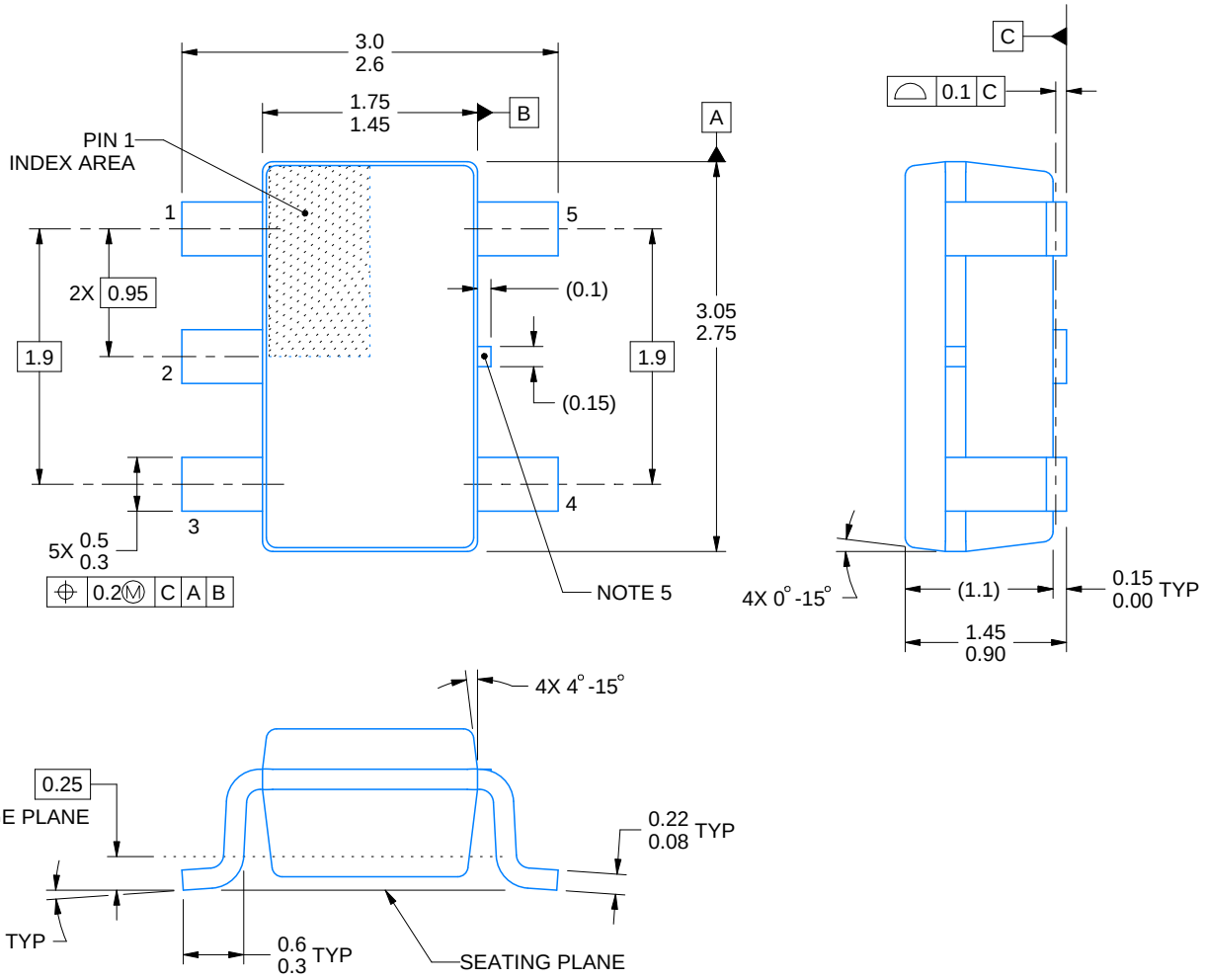

4214839/K 08/2024

NOTES:

1. All linear dimensions are in millimeters. Any dimensions in parenthesis are for reference only. Dimensioning and tolerancing per ASME Y14.5M.
2. This drawing is subject to change without notice.
3. Refernce JEDEC MO-178.
4. Body dimensions do not include mold flash, protrusions, or gate burrs. Mold flash, protrusions, or gate burrs shall not exceed 0.25 mm per side.
5. Support pin may differ or may not be present.

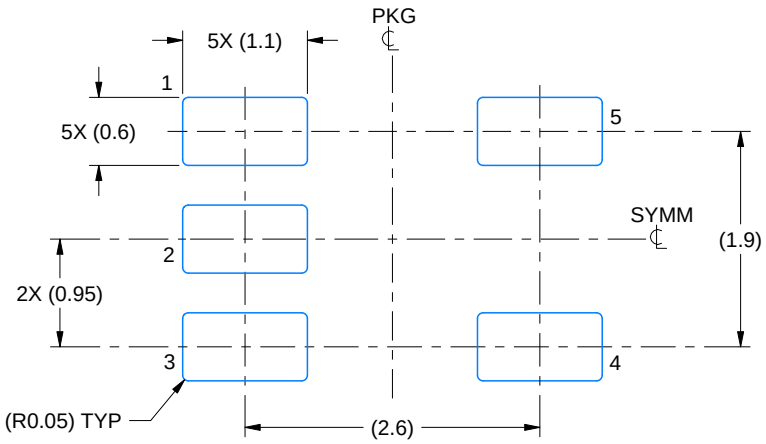

LAND PATTERN EXAMPLE
EXPOSED METAL SHOWN
SCALE:15X

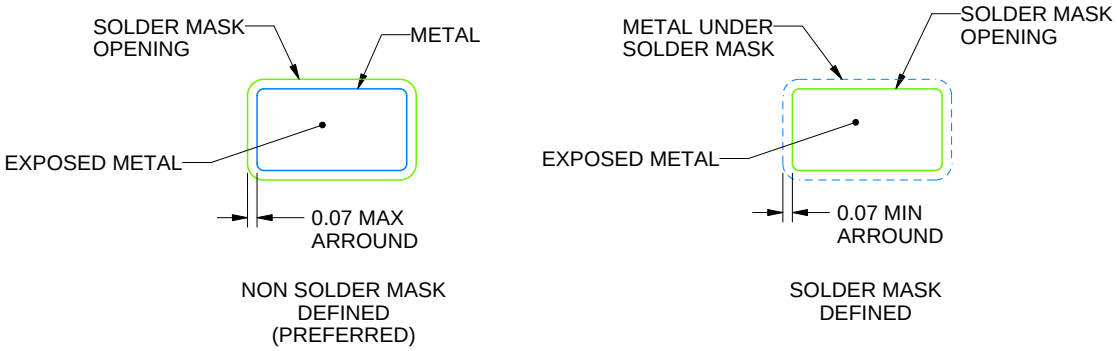

SOLDER MASK DETAILS

4214839/K 08/2024

NOTES: (continued)

6. Publication IPC-7351 may have alternate designs.
7. Solder mask tolerances between and around signal pads can vary based on board fabrication site.

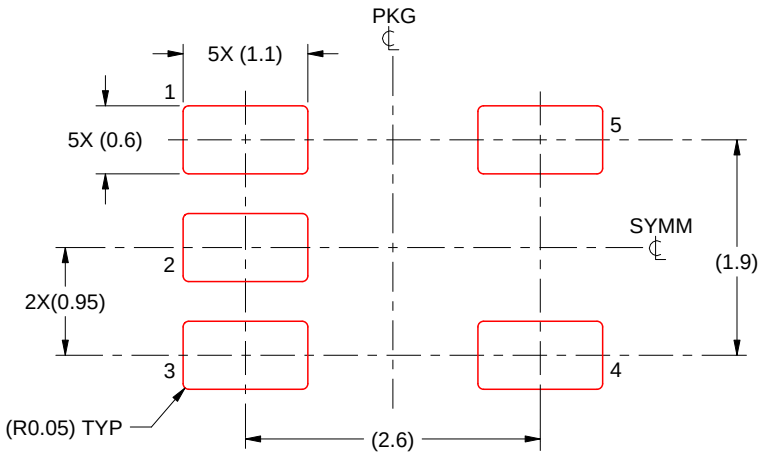

SOLDER PASTE EXAMPLE
BASED ON 0.125 mm THICK STENCIL
SCALE:15X

4214839/K 08/2024

NOTES: (continued)

8. Laser cutting apertures with trapezoidal walls and rounded corners may offer better paste release. IPC-7525 may have alternate design recommendations.
9. Board assembly site may have different recommendations for stencil design.

PACKAGE OUTLINE

DRL0005A

SOT - 0.6 mm max height

PLASTIC SMALL OUTLINE

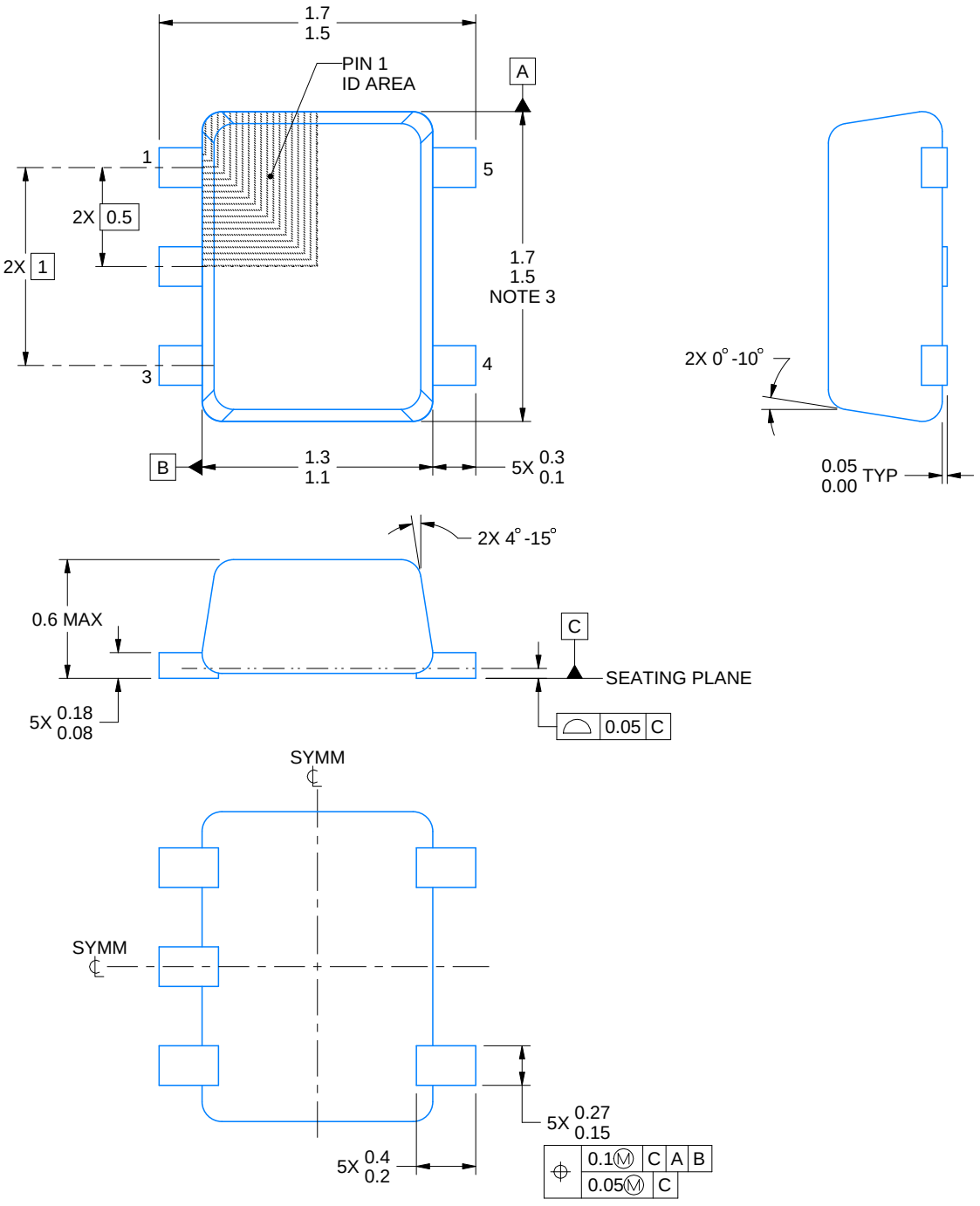

4220753/E 11/2024

NOTES:

1. All linear dimensions are in millimeters. Any dimensions in parenthesis are for reference only. Dimensioning and tolerancing per ASME Y14.5M.
2. This drawing is subject to change without notice.
3. This dimension does not include mold flash, protrusions, or gate burrs. Mold flash, protrusions, or gate burrs shall not exceed 0.15 mm per side.
4. Reference JEDEC registration MO-293 Variation UAAD-1

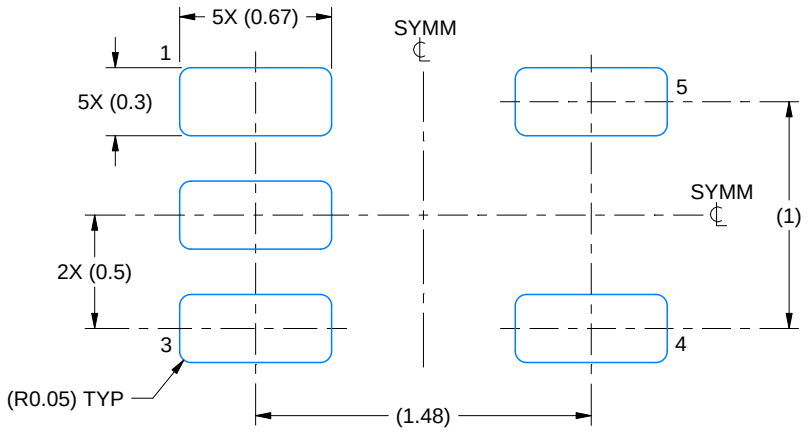

LAND PATTERN EXAMPLE
SCALE:30X

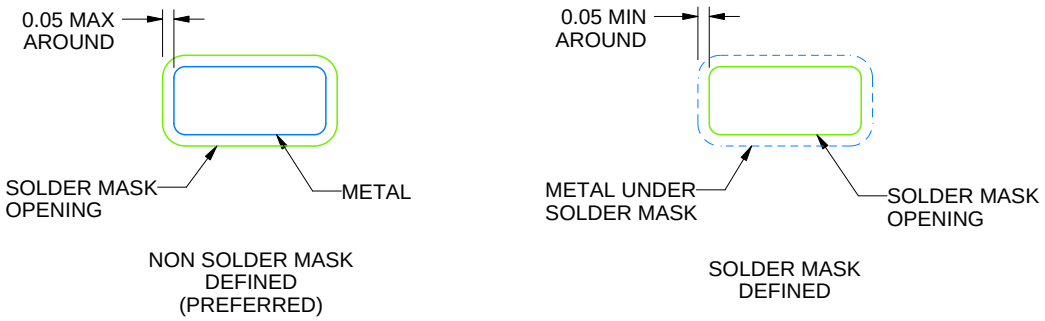

SOLDERMASK DETAILS

4220753/E 11/2024

NOTES: (continued)

5. Publication IPC-7351 may have alternate designs.
6. Solder mask tolerances between and around signal pads can vary based on board fabrication site.

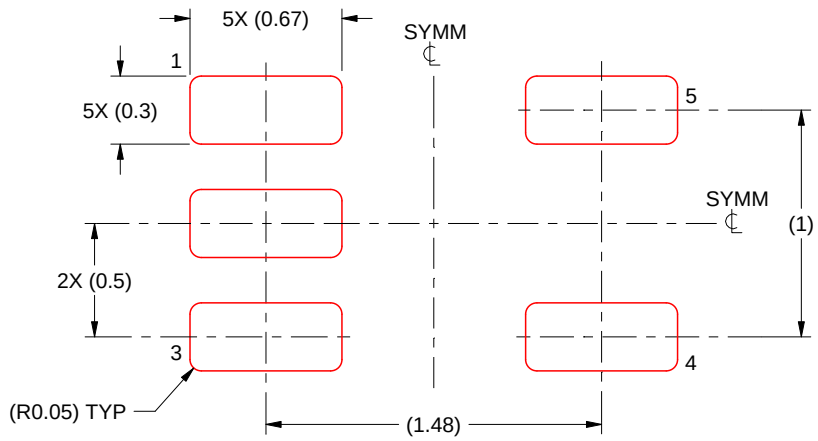

SOLDER PASTE EXAMPLE
BASED ON 0.1 mm THICK STENCIL
SCALE:30X

4220753/E 11/2024

NOTES: (continued)

7. Laser cutting apertures with trapezoidal walls and rounded corners may offer better paste release. IPC-7525 may have alternate design recommendations.
8. Board assembly site may have different recommendations for stencil design.

重要なお知らせと免責事項

TI は、技術データと信頼性データ (データシートを含みます)、設計リソース (リファレンス デザインを含みます)、アプリケーションや設計に関する各種アドバイス、Web ツール、安全性情報、その他のリソースを、欠陥が存在する可能性のある「現状のまま」提供しており、商品性および特定目的に対する適合性の黙示保証、第三者の知的財産権の非侵害保証を含むいかなる保証も、明示的または黙示的にかかわらず拒否します。

これらのリソースは、TI 製品を使用する設計の経験を積んだ開発者への提供を意図したものです。(1) お客様のアプリケーションに適した TI 製品の選定、(2) お客様のアプリケーションの設計、検証、試験、(3) お客様のアプリケーションに該当する各種規格や、その他のあらゆる安全性、セキュリティ、規制、または他の要件への確実な適合に関する責任を、お客様のみが単独で負うものとします。

上記の各種リソースは、予告なく変更される可能性があります。これらのリソースは、リソースで説明されている TI 製品を使用するアプリケーションの開発の目的でのみ、TI はその使用をお客様に許諾します。これらのリソースに関して、他の目的で複製することや掲載することは禁止されています。TI や第三者の知的財産権のライセンスが付与されている訳ではありません。お客様は、これらのリソースを自身で使用した結果発生するあらゆる申し立て、損害、費用、損失、責任について、TI およびその代理人を完全に補償するものとし、TI は一切の責任を拒否します。

TI の製品は、 TI の販売条件 、 TI の総合的な品質ガイドライン 、 ti.com または TI 製品などに関連して提供される他の適用条件に従い提供されます。TI がこれらのリソースを提供することは、適用される TI の保証または他の保証の放棄の拡大や変更を意味するものではありません。 TI がカスタム、またはカスタマー仕様として明示的に指定していない限り、TI の製品は標準的なカタログに掲載される汎用機器です。

お客様がいかなる追加条項または代替条項を提案する場合も、TI はそれらに異議を唱え、拒否します。

Copyright © 2026, Texas Instruments Incorporated

最終更新日：2025 年 10 月