SN74AXC4T245 4 ビット バス トランシーバ、構成可能電圧変換、3 ステート出力

1 特長

- 完全に構成可能なデュアル レール設計により、各ポートは 0.65V～3.6V の範囲の電源電圧で動作可能
- 動作温度範囲：-40℃～+125℃
- 複数の方向制御ピンにより、昇圧と降圧の変換を同時に実行
- グリッチの発生しない電源シーケンシング
- 1.8V から 3.3V への変換時に最高 380Mbps をサポート
- V_{CC} 絶縁機能：
  - どちらかの V_{CC} 入力が 100mV を下回った場合、すべての I/O 出力がディセーブルされ高インピーダンス状態に移行
- I_{off} により部分的パワーダウン モードでの動作をサポート
- AVC ファミリのレベル シフタと互換
- JESD 78、Class II 準拠で 100mA 超のラッチアップ性能
- JESD 22 を上回る ESD 保護：
  - 8000V 人体モデル
  - 1000V 荷電デバイス モデル

2 アプリケーション

- エンタープライズおよび通信
- 産業用
- パーソナル エレクトロニクス
- ワイヤレス インフラ
- ビル オートメーション
- POS システム

3 概要

SN74AXC4T245 は、個別に構成可能な 2 つの電源レールを使用した 4 ビット非反転バス トランシーバです。本デバイスは、最小 0.65V の V_{CCA} と V_{CCB} の両方の電源で動作します。A ポートは V_{CCA} (0.65V～3.6V の任意の電源電圧を入力できます) に追従するように設計されています。同様に B ポートは V_{CCB} (0.65V～3.6V の任意の電源電圧を入力できます) に追従するように設計されています。さらに、SN74AXC4T245 は単一電源システムと互換性があります。

SN74AXC4T245 デバイスは、データ バス間の非同期通信用に設計されています。このデバイスは、方向制御入力 (1DIR および 2DIR) のロジック レベルに応じて、A バスから B バスへ、または B バスから A バスへデータを転送します。出力イネーブル入力 (1$\overline{OE}$ および 2$\overline{OE}$) を使用すると、出力をディスエーブルにして、バスを実質的に絶縁できます。SN74AXC4T245 デバイスは、制御ピン (xDIR および x$\overline{OE}$) が V_{CCA} を基準とするように設計されています。

電源オンまたは電源オフ時にレベル シフタ I/O を高インピーダンス状態にするには、プルアップ抵抗を介して $\overline{OE}$ ピンを V_{CCA} に接続します。

このデバイスは、I_{off} 電流を使用する部分的パワーダウン アプリケーション用に完全に動作が規定されています。I_{off} 保護回路により、電源切断時に入力、出力、複合 I/O は指定の電圧にバイアスされ、それらとの間に過剰な電流が流れることはありません。

V_{CC} 絶縁機能により、V_{CCA} と V_{CCB} のどちらかが 100mV を下回った場合に出力を無効化することで、両方の I/O ポートを高インピーダンス状態にすることができます。

グリッチの発生しない電源シーケンシングにより、堅牢な電源シーケンシング性能が得られると同時に、どちらの電源レールも任意の順序で電源オン / オフできます。

パッケージ情報

部品番号	パッケージ (1)	パッケージ サイズ(2)
SN74AXC4T245	PW (TSSOP、16)	5mm × 6.4mm
	BQB (WQFN、16)	3.5mm × 2.5mm
	RSV (UQFN、16)	2.6mm × 1.8mm

(1) 詳細については、セクション 11 を参照してください。
(2) パッケージ サイズ (長さ×幅) は公称値であり、該当する場合はピンも含まれます。

このリソースの元の言語は英語です。翻訳は概要を便宜的に提供するもので、自動化ツール (機械翻訳) を使用していることがあり、TI では翻訳の正確性および妥当性につきましては一切保証いたしません。実際の設計などの前には、ti.com で必ず最新の英語版をご参照くださいますようお願いいたします。

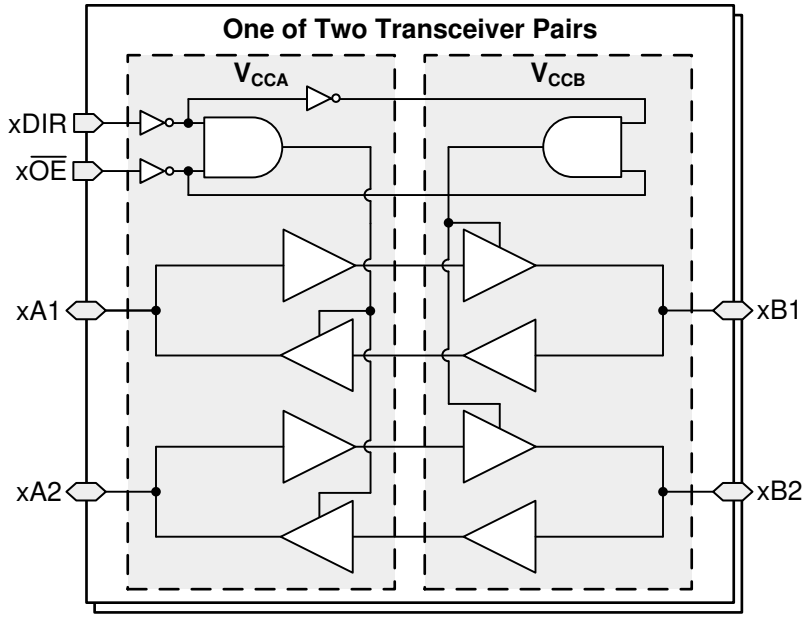

機能ブロック図

Copyright © 2024 Texas Instruments Incorporated

Table of Contents

1 特長 ... 1
2 アプリケーション ... 1
3 概要 ... 1
4 Pin Configuration and Functions ... 4
5 Specifications ... 5
5.1 Absolute Maximum Ratings ... 5
5.2 ESD Ratings ... 5
5.3 Recommended Operating Conditions ... 6
5.4 Thermal Information ... 6
5.5 Electrical Characteristics ... 7
5.6 Switching Characteristics, V_{CCA} = 0.7V ... 8
5.7 Switching Characteristics, V_{CCA} = 0.8V ... 8
5.8 Switching Characteristics, V_{CCA} = 0.9V ... 9
5.9 Switching Characteristics, V_{CCA} = 1.2V ... 10
5.10 Switching Characteristics, V_{CCA} = 1.5V ... 10
5.11 Switching Characteristics, V_{CCA} = 1.8V ... 11
5.12 Switching Characteristics, V_{CCA} = 2.5V ... 12
5.13 Switching Characteristics, V_{CCA} = 3.3V ... 12
5.14 Operating Characteristics: T_A = 25°C ... 14
6 Parameter Measurement Information ... 16
6.1 Load Circuit and Voltage Waveforms ... 16
7 Detailed Description ... 18
7.1 Overview ... 18
7.2 Functional Block Diagram ... 18
7.3 Feature Description ... 18
7.4 Device Functional Modes ... 20
8 Application and Implementation ... 21
8.1 Application Information ... 21
8.2 Typical Application ... 21
8.3 Power Supply Recommendations ... 22
8.4 Layout ... 23
9 Device and Documentation Support ... 24
9.1 Documentation Support ... 24
9.2 ドキュメントの更新通知を受け取る方法 ... 24
9.3 サポート・リソース ... 24
9.4 Trademarks ... 24
9.5 静電気放電に関する注意事項 ... 24
9.6 用語集 ... 24
10 Revision History ... 24
11 Mechanical, Packaging, and Orderable Information ... 25

4 Pin Configuration and Functions

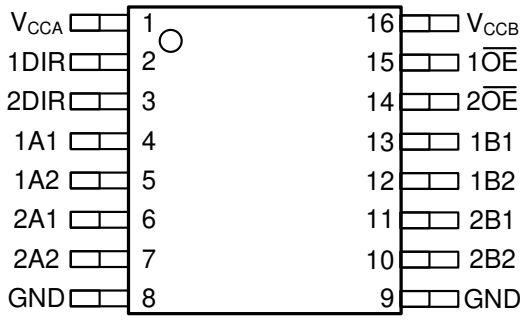

図 4-1. PW Package 16-Pin TSSOP (Top View)

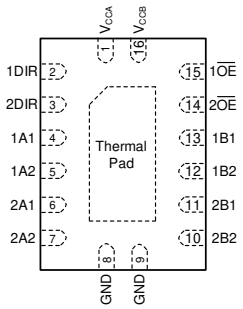

図 4-2. BQB Package 16-Pin WQFN (Transparent Top View)

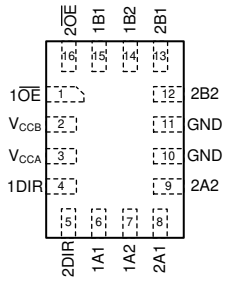

図 4-3. RSV Package 16-Pin UQFN (Transparent Top View)

表 4-1. Pin Functions

PIN	NO.			TYPE(1)	DESCRIPTION
NAME	PW	RSV	BQB		
1A1	4	6	4	I/O	Input/output 1A1. Referenced to V_{CCA}.
1A2	5	7	5	I/O	Input/output 1A2. Referenced to V_{CCA}.
1B1	13	15	13	I/O	Input/output 1B1. Referenced to V_{CCB}.
1B2	12	14	12	I/O	Input/output 1B2. Referenced to V_{CCB}.
1DIR	2	4	2	I	Direction-control input for ‘1’ ports.
1 $\overline{OE}$	15	1	15	I	Tri-state output-mode enable. Pull $\overline{OE}$ high to place ‘1’ outputs in tri-state mode. Referenced to V_{CCA}.
2A1	6	8	6	I/O	Input/output 2A1. Referenced to V_{CCA}.
2A2	7	9	7	I/O	Input/output 2A2. Referenced to V_{CCA}.
2B1	11	13	11	I/O	Input/output 2B1. Referenced to V_{CCB}.
2B2	10	12	10	I/O	Input/output 2B2. Referenced to V_{CCB}.
2DIR	3	5	3	I	Direction-control input for ‘2’ ports.
2 $\overline{OE}$	14	16	14	I	Tri-state output-mode enable. Pull $\overline{OE}$ high to place ‘2’ outputs in tri-state mode. Referenced to V_{CCA}.
GND	8, 9	10, 11	8, 9	—	Ground.
V_{CCA}	1	3	1	—	A-port power supply voltage. 0.65V ≤ V_{CCA} ≤ 3.6V.
V_{CCB}	16	2	16	—	B-port power supply voltage. 0.65V ≤ V_{CCB} ≤ 3.6V.

(1) I = input, O = output

Copyright © 2024 Texas Instruments Incorporated

5 Specifications

5.1 Absolute Maximum Ratings

over operating free-air temperature range (unless otherwise noted)[1]

			MIN	MAX	UNIT
V_{CCA}	Supply voltage A		–0.5	4.2	V
V_{CCB}	Supply voltage B		–0.5	4.2	V
V_I	Input Voltage[2]	I/O Ports (A Port)	–0.5	4.2	V
		I/O Ports (B Port)	–0.5	4.2	
		Control Inputs	–0.5	4.2	
V_O	Voltage applied to any output in the high-impedance or power-off state[2]	A Port	–0.5	4.2	V
		B Port	–0.5	4.2	
V_O	Voltage applied to any output in the high or low state[2] [3]	A Port	–0.5	V_{CCA} + 0.2	V
		B Port	–0.5	V_{CCB} + 0.2	
I_{IK}	Input clamp current	V_I < 0	–50		mA
I_{OK}	Output clamp current	V_O < 0	–50		mA
I_O	Continuous output current		–50	50	mA
	Continuous current through V_{CC} or GND		–100	100	mA
T_j	Junction Temperature			150	°C
T_{stg}	Storage temperature		–65	150	°C

(1) Stresses beyond those listed under *Absolute Maximum Ratings* may cause permanent damage to the device. These are stress ratings only, which do not imply functional operation of the device at these or any other conditions beyond those indicated under *Recommended Operating Conditions.* Exposure to absolute-maximum-rated conditions for extended periods may affect device reliability.
(2) The input voltage and output negative-voltage ratings may be exceeded if the input and output current ratings are observed.
(3) The output positive-voltage rating may be exceeded up to 4.2V maximum if the output current rating is observed.

5.2 ESD Ratings

			VALUE	UNIT
$V_{(ESD)}$	Electrostatic discharge	Human body model (HBM), per ANSI/ESDA/JEDEC JS-001[1]	±8000	V
		Charged device model (CDM), per JEDEC specification JESD22-C101[2]	±1000	

(1) JEDEC document JEP155 states that 500V HBM allows safe manufacturing with a standard ESD control process.
(2) JEDEC document JEP157 states that 250V CDM allows safe manufacturing with a standard ESD control process.

5.3 Recommended Operating Conditions

over operating free-air temperature range (unless otherwise noted)[(1) 2]

				MIN	MAX	UNIT
V_{CCA}	Supply voltage A			0.65	3.6	V
V_{CCB}	Supply voltage B			0.65	3.6	V
V_{IH}	High-level input voltage	Data Inputs	V_{CCI} = 0.65V - 0.75V	V_{CCI} x 0.70		V
			V_{CCI} = 0.76V - 1V	V_{CCI} x 0.70		
			V_{CCI} = 1.1V - 1.95V	V_{CCI} x 0.65		
			V_{CCI} = 2.3V - 2.7V	1.6		
			V_{CCI} = 3V - 3.6V	2		
		Control Inputs(xDIR, x $\overline{OE}$) Referenced to V_{CCA}	V_{CCA} = 0.65V - 0.75V	V_{CCA} x 0.70		
			V_{CCA} = 0.76V - 1V	V_{CCA} x 0.70		
			V_{CCA} = 1.1V - 1.95V	V_{CCA} x 0.65		
			V_{CCA} = 2.3V - 2.7V	1.6		
			V_{CCA} = 3V - 3.6V	2		
V_{IL}	Low-level input voltage	Data Inputs	V_{CCI} = 0.65V - 0.75V		V_{CCI} x 0.30	V
			V_{CCI} = 0.76V - 1V		V_{CCI} x 0.30	
			V_{CCI} = 1.1V - 1.95V		V_{CCI} x 0.35	
			V_{CCI} = 2.3V - 2.7V		0.7	
			V_{CCI} = 3V - 3.6V		0.8	
		Control Inputs(xDIR, x $\overline{OE}$) Referenced to V_{CCA}	V_{CCA} = 0.65V - 0.75V		V_{CCA} x 0.30	
			V_{CCA} = 0.76V - 1V		V_{CCA} x 0.30	
			V_{CCA} = 1.1V - 1.95V		V_{CCA} x 0.35	
			V_{CCA} = 2.3V - 2.7V		0.7	
			V_{CCA} = 3V - 3.6V		0.8	
V_I	Input voltage [1]			0	3.6	V
V_O	Output voltage	Active State		0	V_{CCO}	V
		Tri-State		0	3.6	
$\Delta t/\Delta v$[2]	Input transition rate				10	ns/V
T_A	Operating free-air temperature			–40	125	°C

(1) V_{CCI} is the V_{CC} associated with the input port. V_{CCO} is the V_{CC} associated with the output port.
(2) All unused inputs of the device must be held at VCC or GND for proper device operation. Refer to the TI application report, Implications of Slow or Floating CMOS Inputs.

5.4 Thermal Information

THERMAL METRIC[(1)]		SN74AXC4T245			UNIT
		PW (TSSOP)	RSV (UQFN)	BQB (WQFN)	
		16 PINS	16 PINS	16 PINS	
$R_{\theta JA}$	Junction-to-ambient thermal resistance	126.9	130.1	73.0	°C/W
$R_{\theta JC(top)}$	Junction-to-case (top) thermal resistance	49.3	70.3	35.1	°C/W
$R_{\theta JB}$	Junction-to-board thermal resistance	74.3	57.4	42.8	°C/W
ψ_{JT}	Junction-to-top characterization parameter	8.1	4.6	4.6	°C/W
ψ_{JB}	Junction-to-board characterization parameter	73.4	55.8	42.8	°C/W
$R_{\theta JC(bottom)}$	Junction-to-case (bottom) thermal resistance	NA	NA	10.2	°C/W

(1) For more information about traditional and new thermal metrics, see the Semiconductor and IC Package Thermal Metrics application report.

Copyright © 2024 Texas Instruments Incorporated

5.5 Electrical Characteristics

over operating free-air temperature range (unless otherwise noted) (1) (2)

PARAMETER		TEST CONDITIONS		V_{CCA}	V_{CCB}	Operating free-air temperature (T_A)						UNIT
						–40°C to 85°C			–40°C to 125°C			
						MIN	TYP(4)	MAX	MIN	TYP(4)	MAX	
V_{OH}	High-level output voltage	$V_I = V_{IH}$	I_{OH} = –100µA	0.7V - 3.6V	0.7V - 3.6V	V_{CCO} – 0.1			V_{CCO} – 0.1			V
			I_{OH} = –50µA	0.65V	0.65V	0.55			0.55			
			I_{OH} = –200µA	0.76V	0.76V	0.58			0.58			
			I_{OH} = –500µA	0.85V	0.85V	0.65			0.65			
			I_{OH} = –3mA	1.1V	1.1V	0.85			0.85			
			I_{OH} = –6mA	1.4V	1.4V	1.05			1.05			
			I_{OH} = –8mA	1.65V	1.65V	1.2			1.2			
			I_{OH} = –9mA	2.3V	2.3V	1.75			1.75			
			I_{OH} = –12mA	3V	3V	2.3			2.3			
V_{OL}	Low-level output voltage	$V_I = V_{IL}$	I_{OL} = 100µA	0.7V - 3.6V	0.7V - 3.6V			0.1			0.1	V
			I_{OL} = 50µA	0.65V	0.65V			0.1			0.1	
			I_{OL} = 200µA	0.76V	0.76V			0.18			0.18	
			I_{OL} = 500µA	0.85V	0.85V			0.2			0.2	
			I_{OL} = 3mA	1.1V	1.1V			0.25			0.25	
			I_{OL} = 6mA	1.4V	1.4V			0.35			0.35	
			I_{OL} = 8mA	1.65V	1.65V			0.45			0.45	
			I_{OL} = 9mA	2.3V	2.3V			0.55			0.55	
			I_{OL} = 12mA	3V	3V			0.7			0.7	
I_I	Input leakage current	Control inputs (xDIR, x $\overline{OE}$): V_I = V_{CCA} or GND		0.65V- 3.6V	0.65V- 3.6V	–0.5		0.5	–1		1	µA
		Data Inputs (xAx, xBx) V_I = V_{CCI} or GND		0.65V- 3.6V	0.65V- 3.6V	–4		4	–8		8	µA
I_{off}	Partial power down current	A or B Port V_I or V_O = 0V - 3.6V		0V	0V - 3.6V	–4		4	–8		8	µA
				0V - 3.6V	0V	–4		4	–8		8	
I_{OZ}	Tri-state output current (3)	A or B Port V_I = V_{CCI} or GND, V_O = V_{CCO} or GND, $\overline{OE}$ = V_{IH}		3.6V	3.6V	–4		4	–8		8	µA
I_{CCA}	V_{CCA} supply current	V_I = V_{CCI} or GND	I_O = 0	0.65V- 3.6V	0.65V- 3.6V			13			26	µA
				0V	3.6V	–2			–12			
				3.6V	0V			8			16	
I_{CCB}	V_{CCB} supply current	V_I = V_{CCI} or GND	I_O = 0	0.65V- 3.6V	0.65V- 3.6V			13			26	µA
				0V	3.6V			8			16	
				3.6V	0V	–2			–12			
I_{CCA} + I_{CCB}	Combined supply current	V_I = V_{CCI} or GND	I_O = 0	0.65V- 3.6V	0.65V- 3.6V			20			40	µA
C_i	Control input capacitance	V_I = 3.3V or GND		3.3V	3.3V		4.5			4.5		pF
C_{io}	Data I/O capacitance	$\overline{OE}$ = V_{CCA}, V_O = 1.65V DC +1MHz -16dBm sine wave		3.3V	3.3V		6.6			6.6		pF

(1) V_{CCI} is the V_{CC} associated with the input port.
(2) V_{CCO} is the V_{CC} associated with the output port.
(3) For I/O ports, the parameter I_{OZ} includes the input leakage current.
(4) All typical data is taken at 25°C.

5.6 Switching Characteristics, V_{CCA} = 0.7V

See Figure 1 and Table 1 for test circuit and loading. See Figure 2, Figure 3, and Figure 4 for measurement waveforms.

PARAMETER		FROM	TO	Test Conditions	B-Port Supply Voltage (V_{CCB})																UNIT
					0.7 ± 0.05V		0.8 ± 0.04V		0.9 ± 0.045V		1.2 ± 0.1V		1.5 ± 0.1V		1.8 ± 0.15V		2.5 ± 0.2V		3.3 ± 0.3V		
					MIN	MAX	MIN	MAX	MIN	MAX	MIN	MAX	MIN	MAX	MIN	MAX	MIN	MAX	MIN	MAX	
t_{pd}	Propagation delay	A	B	–40°C to 85°C	0.5	155	0.5	108	0.5	76	0.5	40	0.5	37	0.5	40	0.5	67	0.5	185	ns
				–40°C to 125°C	0.5	155	0.5	108	0.5	76	0.5	40	0.5	37	0.5	40	0.5	67	0.5	185	
		B	A	–40°C to 85°C	0.5	156	0.5	128	0.5	106	0.5	55	0.5	21	0.5	15	0.5	11	0.5	10	
				–40°C to 125°C	0.5	156	0.5	128	0.5	106	0.5	55	0.5	21	0.5	15	0.5	11	0.5	10	
t_{dis}	Disable time	$\overline{OE}$	A	–40°C to 85°C	0.5	156	0.5	156	0.5	156	0.5	156	0.5	156	0.5	156	0.5	156	0.5	156	ns
				–40°C to 125°C	0.5	156	0.5	156	0.5	156	0.5	156	0.5	156	0.5	156	0.5	156	0.5	156	
		$\overline{OE}$	B	–40°C to 85°C	0.5	154	0.5	121	0.5	101	0.5	55	0.5	54	0.5	56	0.5	65	0.5	125	
				–40°C to 125°C	0.5	154	0.5	121	0.5	101	0.5	55	0.5	54	0.5	56	0.5	65	0.5	125	
t_{en}	Enable time	$\overline{OE}$	A	–40°C to 85°C	0.5	238	0.5	238	0.5	238	0.5	238	0.5	238	0.5	238	0.5	238	0.5	238	ns
				–40°C to 125°C	0.5	238	0.5	238	0.5	238	0.5	238	0.5	238	0.5	238	0.5	238	0.5	238	
		$\overline{OE}$	B	–40°C to 85°C	0.5	286	0.5	194	0.5	146	0.5	94	0.5	76	0.5	70	0.5	69	0.5	146	
				–40°C to 125°C	0.5	286	0.5	194	0.5	146	0.5	94	0.5	76	0.5	70	0.5	69	0.5	146	

5.7 Switching Characteristics, V_{CCA} = 0.8V

See Figure 1 and Table 1 for test circuit and loading. See Figure 2, Figure 3, and Figure 4 for measurement waveforms.

PARAMETER		FROM	TO	Test Conditions	B-Port Supply Voltage (V_{CCB})																UNIT
					0.7 ± 0.05V		0.8 ± 0.04V		0.9 ± 0.045V		1.2 ± 0.1V		1.5 ± 0.1V		1.8 ± 0.15V		2.5 ± 0.2V		3.3 ± 0.3V		
					MIN	MAX	MIN	MAX	MIN	MAX	MIN	MAX	MIN	MAX	MIN	MAX	MIN	MAX	MIN	MAX	
t_{pd}	Propagation delay	A	B	–40°C to 85°C	0.5	128	0.5	88	0.5	63	0.5	29	0.5	24	0.5	23	0.5	24	0.5	34	ns
				–40°C to 125°C	0.5	128	0.5	88	0.5	63	0.5	29	0.5	24	0.5	23	0.5	24	0.5	34	
		B	A	–40°C to 85°C	0.5	108	0.5	88	0.5	70	0.5	38	0.5	21	0.5	15	0.5	11	0.5	10	
				–40°C to 125°C	0.5	108	0.5	88	0.5	70	0.5	38	0.5	21	0.5	15	0.5	11	0.5	10	
t_{dis}	Disable time	$\overline{OE}$	A	–40°C to 85°C	0.5	103	0.5	103	0.5	103	0.5	103	0.5	103	0.5	103	0.5	103	0.5	103	ns
				–40°C to 125°C	0.5	103	0.5	103	0.5	103	0.5	103	0.5	103	0.5	103	0.5	103	0.5	103	
		$\overline{OE}$	B	–40°C to 85°C	0.5	143	0.5	110	0.5	90	0.5	42	0.5	36	0.5	36	0.5	37	0.5	47	
				–40°C to 125°C	0.5	143	0.5	110	0.5	90	0.5	42	0.5	36	0.5	36	0.5	37	0.5	47	

Copyright © 2024 Texas Instruments Incorporated

5.7 Switching Characteristics, V_{CCA} = 0.8V (続き)

See Figure 1 and Table 1 for test circuit and loading. See Figure 2, Figure 3, and Figure 4 for measurement waveforms.

PARAMETER		FROM	TO	Test Conditions	B-Port Supply Voltage (V_{CCB})																UNIT
					0.7 ± 0.05V		0.8 ± 0.04V		0.9 ± 0.045V		1.2 ± 0.1V		1.5 ± 0.1V		1.8 ± 0.15V		2.5 ± 0.2V		3.3 ± 0.3V		
					MIN	MAX	MIN	MAX	MIN	MAX	MIN	MAX	MIN	MAX	MIN	MAX	MIN	MAX	MIN	MAX	
t_{en}	Enable time	$\overline{OE}$	A	–40°C to 85°C	0.5	143	0.5	143	0.5	143	0.5	143	0.5	143	0.5	143	0.5	143	0.5	143	ns
				–40°C to 125°C	0.5	143	0.5	143	0.5	143	0.5	143	0.5	143	0.5	143	0.5	143	0.5	143	
		$\overline{OE}$	B	–40°C to 85°C	0.5	243	0.5	172	0.5	129	0.5	79	0.5	60	0.5	54	0.5	48	0.5	53	
				–40°C to 125°C	0.5	243	0.5	172	0.5	129	0.5	79	0.5	60	0.5	54	0.5	48	0.5	53	

5.8 Switching Characteristics, V_{CCA} = 0.9V

See Figure 1 and Table 1 for test circuit and loading. See Figure 2, Figure 3, and Figure 4 for measurement waveforms.

PARAMETER		FROM	TO	Test Conditions	B-Port Supply Voltage (V_{CCB})																UNIT
					0.7 ± 0.05V		0.8 ± 0.04V		0.9 ± 0.045V		1.2 ± 0.1V		1.5 ± 0.1V		1.8 ± 0.15V		2.5 ± 0.2V		3.3 ± 0.3V		
					MIN	MAX	MIN	MAX	MIN	MAX	MIN	MAX	MIN	MAX	MIN	MAX	MIN	MAX	MIN	MAX	
t_{pd}	Propagation delay	A	B	–40°C to 85°C	0.5	106	0.5	70	0.5	53	0.5	24	0.5	18	0.5	17	0.5	16	0.5	19	ns
				–40°C to 125°C	0.5	106	0.5	70	0.5	53	0.5	24	0.5	18	0.5	17	0.5	16	0.5	19	
		B	A	–40°C to 85°C	0.5	76	0.5	63	0.5	53	0.5	27	0.5	18	0.5	13	0.5	10	0.5	9	
				–40°C to 125°C	0.5	76	0.5	63	0.5	53	0.5	27	0.5	18	0.5	13	0.5	10	0.5	9	
t_{dis}	Disable time	$\overline{OE}$	A	–40°C to 85°C	0.5	81	0.5	81	0.5	81	0.5	81	0.5	81	0.5	81	0.5	81	0.5	81	ns
				–40°C to 125°C	0.5	81	0.5	81	0.5	81	0.5	81	0.5	81	0.5	81	0.5	81	0.5	81	
		$\overline{OE}$	B	–40°C to 85°C	0.5	138	0.5	105	0.5	84	0.5	37	0.5	30	0.5	28	0.5	26	0.5	30	
				–40°C to 125°C	0.5	138	0.5	105	0.5	84	0.5	37	0.5	30	0.5	28	0.5	26	0.5	30	
t_{en}	Enable time	$\overline{OE}$	A	–40°C to 85°C	0.5	95	0.5	95	0.5	95	0.5	95	0.5	95	0.5	95	0.5	95	0.5	95	ns
				–40°C to 125°C	0.5	95	0.5	95	0.5	95	0.5	95	0.5	95	0.5	95	0.5	95	0.5	95	
		$\overline{OE}$	B	–40°C to 85°C	0.5	222	0.5	148	0.5	116	0.5	71	0.5	52	0.5	46	0.5	39	0.5	39	
				–40°C to 125°C	0.5	222	0.5	148	0.5	116	0.5	71	0.5	52	0.5	46	0.5	39	0.5	39	

Copyright © 2024 Texas Instruments Incorporated

5.9 Switching Characteristics, V_{CCA} = 1.2V

See Figure 1 and Table 1 for test circuit and loading. See Figure 2, Figure 3, and Figure 4 for measurement waveforms.

PARAMETER		FROM	TO	Test Conditions	B-Port Supply Voltage (V_{CCB})																UNIT
					0.7 ± 0.05V		0.8 ± 0.04V		0.9 ± 0.045V		1.2 ± 0.1V		1.5 ± 0.1V		1.8 ± 0.15V		2.5 ± 0.2V		3.3 ± 0.3V		
					MIN	MAX	MIN	MAX	MIN	MAX	MIN	MAX	MIN	MAX	MIN	MAX	MIN	MAX	MIN	MAX	
t_{pd}	Propagation delay	A	B	–40°C to 85°C	0.5	55	0.5	37	0.5	27	0.5	15	0.5	11	0.5	10	0.5	8	0.5	9	ns
				–40°C to 125°C	0.5	55	0.5	37	0.5	27	0.5	15	0.5	11	0.5	10	0.5	8	0.5	9	
		B	A	–40°C to 85°C	0.5	41	0.5	29	0.5	24	0.5	15	0.5	10	0.5	9	0.5	7	0.5	6	
				–40°C to 125°C	0.5	41	0.5	29	0.5	24	0.5	15	0.5	10	0.5	9	0.5	7	0.5	6	
t_{dis}	Disable time	$\overline{OE}$	A	–40°C to 85°C	0.5	30	0.5	30	0.5	30	0.5	30	0.5	30	0.5	30	0.5	30	0.5	30	ns
				–40°C to 125°C	0.5	30	0.5	30	0.5	30	0.5	30	0.5	30	0.5	30	0.5	30	0.5	30	
		$\overline{OE}$	B	–40°C to 85°C	0.5	132	0.5	99	0.5	79	0.5	31	0.5	24	0.5	21	0.5	18	0.5	18	
				–40°C to 125°C	0.5	132	0.5	99	0.5	79	0.5	31	0.5	24	0.5	21	0.5	18	0.5	18	
t_{en}	Enable time	$\overline{OE}$	A	–40°C to 85°C	0.5	45	0.5	45	0.5	45	0.5	45	0.5	45	0.5	45	0.5	45	0.5	45	ns
				–40°C to 125°C	0.5	45	0.5	45	0.5	45	0.5	45	0.5	45	0.5	45	0.5	45	0.5	45	
		$\overline{OE}$	B	–40°C to 85°C	0.5	164	0.5	108	0.5	79	0.5	58	0.5	41	0.5	35	0.5	27	0.5	24	
				–40°C to 125°C	0.5	164	0.5	108	0.5	79	0.5	58	0.5	41	0.5	35	0.5	27	0.5	24	

5.10 Switching Characteristics, V_{CCA} = 1.5V

See Figure 1 and Table 1 for test circuit and loading. See Figure 2, Figure 3, and Figure 4 for measurement waveforms.

PARAMETER		FROM	TO	Test Conditions	B-Port Supply Voltage (V_{CCB})																UNIT
					0.7 ± 0.05V		0.8 ± 0.04V		0.9 ± 0.045V		1.2 ± 0.1V		1.5 ± 0.1V		1.8 ± 0.15V		2.5 ± 0.2V		3.3 ± 0.3V		
					MIN	MAX	MIN	MAX	MIN	MAX	MIN	MAX	MIN	MAX	MIN	MAX	MIN	MAX	MIN	MAX	
t_{pd}	Propagation delay	A	B	–40°C to 85°C	0.5	21	0.5	21	0.5	18	0.5	11	0.5	9	0.5	8	0.5	7	0.5	6	ns
				–40°C to 125°C	0.5	21	0.5	21	0.5	18	0.5	11	0.5	9	0.5	8	0.5	7	0.5	6	
		B	A	–40°C to 85°C	0.5	37	0.5	24	0.5	18	0.5	11	0.5	9	0.5	8	0.5	5	0.5	5	
				–40°C to 125°C	0.5	37	0.5	24	0.5	18	0.5	11	0.5	9	0.5	8	0.5	5	0.5	5	
t_{dis}	Disable time	$\overline{OE}$	A	–40°C to 85°C	0.5	21	0.5	21	0.5	21	0.5	21	0.5	21	0.5	21	0.5	21	0.5	21	ns
				–40°C to 125°C	0.5	21	0.5	21	0.5	21	0.5	21	0.5	21	0.5	21	0.5	21	0.5	21	
		$\overline{OE}$	B	–40°C to 85°C	0.5	131	0.5	97	0.5	77	0.5	29	0.5	21	0.5	19	0.5	15	0.5	15	
				–40°C to 125°C	0.5	131	0.5	97	0.5	77	0.5	29	0.5	21	0.5	19	0.5	15	0.5	15	

Copyright © 2024 Texas Instruments Incorporated

5.10 Switching Characteristics, V_{CCA} = 1.5V (続き)

See Figure 1 and Table 1 for test circuit and loading. See Figure 2, Figure 3, and Figure 4 for measurement waveforms.

PARAMETER		FROM	TO	Test Conditions	B-Port Supply Voltage (V_{CCB})																UNIT
					0.7 ± 0.05V		0.8 ± 0.04V		0.9 ± 0.045V		1.2 ± 0.1V		1.5 ± 0.1V		1.8 ± 0.15V		2.5 ± 0.2V		3.3 ± 0.3V		
					MIN	MAX	MIN	MAX	MIN	MAX	MIN	MAX	MIN	MAX	MIN	MAX	MIN	MAX	MIN	MAX	
t_{en}	Enable time	$\overline{OE}$	A	–40°C to 85°C	0.5	26	0.5	26	0.5	26	0.5	26	0.5	26	0.5	26	0.5	26	0.5	26	ns
				–40°C to 125°C	0.5	26	0.5	26	0.5	26	0.5	26	0.5	26	0.5	26	0.5	26	0.5	26	
		$\overline{OE}$	B	–40°C to 85°C	0.5	109	0.5	84	0.5	68	0.5	47	0.5	35	0.5	29	0.5	22	0.5	20	
				–40°C to 125°C	0.5	109	0.5	84	0.5	68	0.5	47	0.5	35	0.5	29	0.5	22	0.5	20	

5.11 Switching Characteristics, V_{CCA} = 1.8V

See Figure 1 and Table 1 for test circuit and loading. See Figure 2, Figure 3, and Figure 4 for measurement waveforms.

PARAMETER		FROM	TO	Test Conditions	B-Port Supply Voltage (V_{CCB})																UNIT
					0.7 ± 0.05V		0.8 ± 0.04V		0.9 ± 0.045V		1.2 ± 0.1V		1.5 ± 0.1V		1.8 ± 0.15V		2.5 ± 0.2V		3.3 ± 0.3V		
					MIN	MAX	MIN	MAX	MIN	MAX	MIN	MAX	MIN	MAX	MIN	MAX	MIN	MAX	MIN	MAX	
t_{pd}	Propagation delay	A	B	–40°C to 85°C	0.5	15	0.5	15	0.5	13	0.5	9	0.5	8	0.5	7	0.5	6	0.5	6	ns
				–40°C to 125°C	0.5	15	0.5	15	0.5	13	0.5	9	0.5	8	0.5	7	0.5	6	0.5	6	
		B	A	–40°C to 85°C	0.5	40	0.5	23	0.5	17	0.5	10	0.5	8	0.5	7	0.5	5	0.5	4	
				–40°C to 125°C	0.5	40	0.5	23	0.5	17	0.5	10	0.5	8	0.5	7	0.5	5	0.5	4	
t_{dis}	Disable time	$\overline{OE}$	A	–40°C to 85°C	0.5	18	0.5	18	0.5	18	0.5	18	0.5	18	0.5	18	0.5	18	0.5	18	ns
				–40°C to 125°C	0.5	18	0.5	18	0.5	18	0.5	18	0.5	18	0.5	18	0.5	18	0.5	18	
		$\overline{OE}$	B	–40°C to 85°C	0.5	130	0.5	96	0.5	76	0.5	28	0.5	21	0.5	18	0.5	15	0.5	14	
				–40°C to 125°C	0.5	130	0.5	96	0.5	76	0.5	28	0.5	21	0.5	18	0.5	15	0.5	14	
t_{en}	Enable time	$\overline{OE}$	A	–40°C to 85°C	0.5	20	0.5	20	0.5	20	0.5	20	0.5	20	0.5	20	0.5	20	0.5	20	ns
				–40°C to 125°C	0.5	20	0.5	20	0.5	20	0.5	20	0.5	20	0.5	20	0.5	20	0.5	20	
		$\overline{OE}$	B	–40°C to 85°C	0.5	102	0.5	75	0.5	62	0.5	41	0.5	32	0.5	27	0.5	20	0.5	18	
				–40°C to 125°C	0.5	102	0.5	75	0.5	62	0.5	41	0.5	32	0.5	27	0.5	20	0.5	18	

5.12 Switching Characteristics, V_{CCA} = 2.5V

See Figure 1 and Table 1 for test circuit and loading. See Figure 2, Figure 3, and Figure 4 for measurement waveforms.

PARAMETER		FROM	TO	Test Conditions	B-Port Supply Voltage (V_{CCB})																UNIT
					0.7 ± 0.05V		0.8 ± 0.04V		0.9 ± 0.045V		1.2 ± 0.1V		1.5 ± 0.1V		1.8 ± 0.15V		2.5 ± 0.2V		3.3 ± 0.3V		
					MIN	MAX	MIN	MAX	MIN	MAX	MIN	MAX	MIN	MAX	MIN	MAX	MIN	MAX	MIN	MAX	
t_{pd}	Propagation delay	A	B	–40°C to 85°C	0.5	11	0.5	11	0.5	10	0.5	7	0.5	5	0.5	5	0.5	5	0.5	5	ns
				–40°C to 125°C	0.5	11	0.5	11	0.5	11	0.5	7	0.5	5	0.5	5	0.5	5	0.5	5	
		B	A	–40°C to 85°C	0.5	67	0.5	24	0.5	16	0.5	8	0.5	7	0.5	6	0.5	5	0.5	4	
				–40°C to 125°C	0.5	67	0.5	24	0.5	16	0.5	8	0.5	7	0.5	6	0.5	5	0.5	4	
t_{dis}	Disable time	$\overline{OE}$	A	–40°C to 85°C	0.5	13	0.5	13	0.5	13	0.5	13	0.5	13	0.5	13	0.5	13	0.5	13	ns
				–40°C to 125°C	0.5	13	0.5	13	0.5	13	0.5	13	0.5	13	0.5	13	0.5	13	0.5	13	
		$\overline{OE}$	B	–40°C to 85°C	0.5	128	0.5	95	0.5	76	0.5	27	0.5	20	0.5	17	0.5	13	0.5	13	
				–40°C to 125°C	0.5	128	0.5	95	0.5	76	0.5	27	0.5	20	0.5	17	0.5	13	0.5	13	
t_{en}	Enable time	$\overline{OE}$	A	–40°C to 85°C	0.5	13	0.5	13	0.5	13	0.5	13	0.5	13	0.5	13	0.5	13	0.5	13	ns
				–40°C to 125°C	0.5	13	0.5	13	0.5	13	0.5	13	0.5	13	0.5	13	0.5	13	0.5	13	
		$\overline{OE}$	B	–40°C to 85°C	0.5	120	0.5	70	0.5	56	0.5	36	0.5	26	0.5	22	0.5	18	0.5	16	
				–40°C to 125°C	0.5	120	0.5	70	0.5	56	0.5	36	0.5	26	0.5	22	0.5	18	0.5	16	

5.13 Switching Characteristics, V_{CCA} = 3.3V

See Figure 1 and Table 1 for test circuit and loading. See Figure 2, Figure 3, and Figure 4 for measurement waveforms.

PARAMETER		FROM	TO	Test Conditions	B-Port Supply Voltage (V_{CCB})																UNIT
					0.7 ± 0.05V		0.8 ± 0.04V		0.9 ± 0.045V		1.2 ± 0.1V		1.5 ± 0.1V		1.8 ± 0.15V		2.5 ± 0.2V		3.3 ± 0.3V		
					MIN	MAX	MIN	MAX	MIN	MAX	MIN	MAX	MIN	MAX	MIN	MAX	MIN	MAX	MIN	MAX	
t_{pd}	Propagation delay	A	B	–40°C to 85°C	0.5	10	0.5	10	0.5	9	0.5	6	0.5	5	0.5	4	0.5	4	0.5	4	ns
				–40°C to 125°C	0.5	10	0.5	10	0.5	9	0.5	6	0.5	5	0.5	4	0.5	4	0.5	4	
		B	A	–40°C to 85°C	0.5	185	0.5	34	0.5	19	0.5	9	0.5	6	0.5	6	0.5	5	0.5	4	
				–40°C to 125°C	0.5	185	0.5	34	0.5	19	0.5	9	0.5	6	0.5	6	0.5	5	0.5	4	
t_{dis}	Disable time	$\overline{OE}$	A	–40°C to 85°C	0.5	12	0.5	12	0.5	12	0.5	12	0.5	12	0.5	12	0.5	12	0.5	12	ns
				–40°C to 125°C	0.5	12	0.5	12	0.5	12	0.5	12	0.5	12	0.5	12	0.5	12	0.5	12	
		$\overline{OE}$	B	–40°C to 85°C	0.5	141	0.5	95	0.5	75	0.5	27	0.5	19	0.5	17	0.5	13	0.5	12	
				–40°C to 125°C	0.5	141	0.5	95	0.5	75	0.5	27	0.5	19	0.5	17	0.5	13	0.5	12	

Copyright © 2024 Texas Instruments Incorporated

5.13 Switching Characteristics, V_{CCA} = 3.3V (続き)

See Figure 1 and Table 1 for test circuit and loading. See Figure 2, Figure 3, and Figure 4 for measurement waveforms.

PARAMETER		FROM	TO	Test Conditions	B-Port Supply Voltage (V_{CCB})																UNIT
					0.7 ± 0.05V		0.8 ± 0.04V		0.9 ± 0.045V		1.2 ± 0.1V		1.5 ± 0.1V		1.8 ± 0.15V		2.5 ± 0.2V		3.3 ± 0.3V		
					MIN	MAX	MIN	MAX	MIN	MAX	MIN	MAX	MIN	MAX	MIN	MAX	MIN	MAX	MIN	MAX	
t_{en}	Enable time	$\overline{OE}$	A	–40°C to 85°C	0.5	11	0.5	11	0.5	11	0.5	11	0.5	11	0.5	11	0.5	11	0.5	11	ns
				–40°C to 125°C	0.5	11	0.5	11	0.5	11	0.5	11	0.5	11	0.5	11	0.5	11	0.5	11	
		$\overline{OE}$	B	–40°C to 85°C	0.5	189	0.5	82	0.5	59	0.5	35	0.5	24	0.5	20	0.5	16	0.5	14	
				–40°C to 125°C	0.5	189	0.5	82	0.5	59	0.5	35	0.5	24	0.5	20	0.5	16	0.5	14	

5.14 Operating Characteristics: T_A = 25°C

PARAMETER		TEST CONDITIONS	V_{CCA}	V_{CCB}	MIN	TYP	MAX	UNIT
C_{pdA}	Power Dissipation Capacitance per transceiver (A to B: outputs enabled)	CL = 0, RL = Open f = 1MHz, tr = tf = 1ns	0.7V	0.7V		2.2		pF
			0.8V	0.8V		2.1		
			0.9V	0.9V		2.1		
			1.2V	1.2V		2.1		
			1.5V	1.5V		2.0		
			1.8V	1.8V		2.0		
			2.5V	2.5V		2.1		
			3.3V	3.3V		2.3		
	Power Dissipation Capacitance per transceiver (A to B: outputs disabled)	CL = 0, RL = Open f = 1MHz, tr = tf = 1ns	0.7V	0.7V		1.5		pF
			0.8V	0.8V		1.5		
			0.9V	0.9V		1.5		
			1.2V	1.2V		1.4		
			1.5V	1.5V		1.4		
			1.8V	1.8V		1.4		
			2.5V	2.5V		1.4		
			3.3V	3.3V		1.6		
	Power Dissipation Capacitance per transceiver (B to A: outputs enabled)	CL = 0, RL = Open f = 1MHz, tr = tf = 1ns	0.7V	0.7V		12.1		pF
			0.8V	0.8V		12.1		
			0.9V	0.9V		12.1		
			1.2V	1.2V		12.4		
			1.5V	1.5V		13.0		
			1.8V	1.8V		14.2		
			2.5V	2.5V		17.4		
			3.3V	3.3V		20.1		
	Power Dissipation Capacitance per transceiver (B to A: outputs disabled)	CL = 0, RL = Open f = 1MHz, tr = tf = 1ns	0.7V	0.7V		1.1		pF
			0.8V	0.8V		1.1		
			0.9V	0.9V		1.1		
			1.2V	1.2V		1.1		
			1.5V	1.5V		1.1		
			1.8V	1.8V		1.1		
			2.5V	2.5V		1.1		
			3.3V	3.3V		1.1		

Copyright © 2024 Texas Instruments Incorporated

5.14 Operating Characteristics: T_A = 25°C (続き)

PARAMETER		TEST CONDITIONS	V_{CCA}	V_{CCB}	MIN	TYP	MAX	UNIT
C_{pdB}	Power Dissipation Capacitance per transceiver (A to B: outputs enabled)	CL = 0, RL = Open f = 1MHz, tr = tf = 1ns	0.7V	0.7V		12.1		pF
			0.8V	0.8V		12.1		
			0.9V	0.9V		12.1		
			1.2V	1.2V		12.4		
			1.5V	1.5V		12.9		
			1.8V	1.8V		14.1		
			2.5V	2.5V		17.2		
			3.3V	3.3V		20.1		
	Power Dissipation Capacitance per transceiver (A to B: outputs disabled)	CL = 0, RL = Open f = 1MHz, tr = tf = 1ns	0.7V	0.7V		1.1		pF
			0.8V	0.8V		1.1		
			0.9V	0.9V		1.1		
			1.2V	1.2V		1.1		
			1.5V	1.5V		1.1		
			1.8V	1.8V		1.1		
			2.5V	2.5V		1.1		
			3.3V	3.3V		1.1		
	Power Dissipation Capacitance per transceiver (B to A: outputs enabled)	CL = 0, RL = Open f = 1MHz, tr = tf = 1ns	0.7V	0.7V		1.2		pF
			0.8V	0.8V		1.8		
			0.9V	0.9V		1.8		
			1.2V	1.2V		1.7		
			1.5V	1.5V		1.7		
			1.8V	1.8V		1.7		
			2.5V	2.5V		2		
			3.3V	3.3V		2.5		
	Power Dissipation Capacitance per transceiver (B to A: outputs disabled)	CL = 0, RL = Open f = 1MHz, tr = tf = 1ns	0.7V	0.7V		1.1		pF
			0.8V	0.8V		1.8		
			0.9V	0.9V		1.8		
			1.2V	1.2V		1.7		
			1.5V	1.5V		1.7		
			1.8V	1.8V		1.7		
			2.5V	2.5V		2		
			3.3V	3.3V		2.1		

6 Parameter Measurement Information

6.1 Load Circuit and Voltage Waveforms

Unless otherwise noted, all input pulses are supplied by generators having the following characteristics:

- f = 1MHz
- Z_O = 50Ω
- dv/dt ≤ 1ns/V

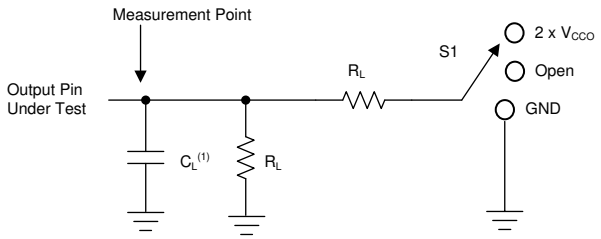

A. C_L includes probe and jig capacitance.

図 6-1. Load Circuit

表 6-1. Load Circuit Conditions

Parameter		V_{CCO}	R_L	C_L	S_1	V_{TP}
Δt/Δv	Input transition rise or fall rate	0.65V – 3.6V	1MΩ	15pF	Open	N/A
t_{pd}	Propagation (delay) time	1.1V – 3.6V	2kΩ	15pF	Open	N/A
		0.65V – 0.95V	20kΩ	15pF	Open	N/A
t_{en}, t_{dis}	Enable time, disable time	3V – 3.6V	2kΩ	15pF	2 × V_{CCO}	0.3V
		1.65V – 2.7V	2kΩ	15pF	2 × V_{CCO}	0.15V
		1.1V – 1.6V	2kΩ	15pF	2 × V_{CCO}	0.1V
		0.65V – 0.95V	20kΩ	15pF	2 × V_{CCO}	0.1V
t_{en}, t_{dis}	Enable time, disable time	3V – 3.6V	2kΩ	15pF	GND	0.3V
		1.65V – 2.7V	2kΩ	15pF	GND	0.15V
		1.1V – 1.6V	2kΩ	15pF	GND	0.1V
		0.65V – 0.95V	20kΩ	15pF	GND	0.1V

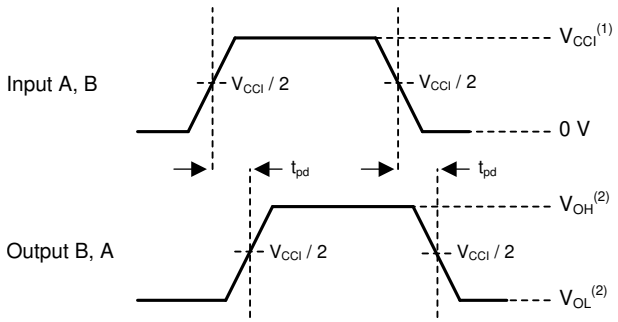

1. V_{CCI} is the supply pin associated with the input port.
2. V_{OH} and V_{OL} are typical output voltage levels that occur with specified R_L, C_L, and S_1

図 6-2. Propagation Delay

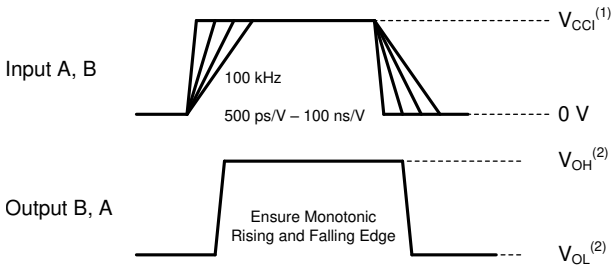

1. V_{CCI} is the supply pin associated with the input port.
2. V_{OH} and V_{OL} are typical output voltage levels that occur with specified R_L, C_L, and S_1

図 6-3. Input Transition Rise or Fall Rate

Copyright © 2024 Texas Instruments Incorporated

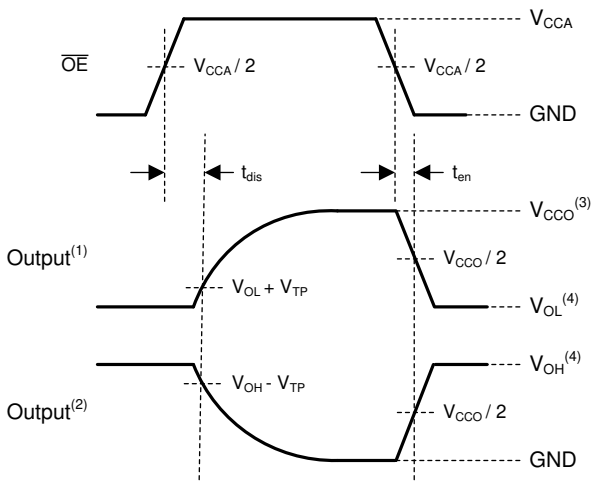

A. Output waveform on the condition that input is driven to a valid Logic Low.
B. Output waveform on the condition that input is driven to a valid Logic High.
C. V_{CCO} is the supply pin associated with the output port.
D. V_{OH} and V_{OL} are typical output voltage levels with specified R_L, C_L, and S_1.

図 6-4. Enable Time And Disable Time

7 Detailed Description

7.1 Overview

The SN74AXC4T245 is a 4-bit, dual-supply noninverting bidirectional voltage level translation device. Ax pins and control pins (1DIR, 2DIR,1 $\overline{OE}$, and 2 $\overline{OE}$) are referenced to V_{CCA} logic levels, and Bx pins are referenced to V_{CCB} logic levels. The A port is able to accept I/O voltages ranging from 0.65V to 3.6V, while the B port can accept I/O voltages from 0.65V to 3.6V. A high on DIR allows data transmission from A to B and a low on DIR allows data transmission from B to A when $\overline{OE}$ is set to low. When $\overline{OE}$ is set to high, both Ax and Bx pins are in the high-impedance state. See *Device Functional Modes* for a summary of the operation of the control logic.

7.2 Functional Block Diagram

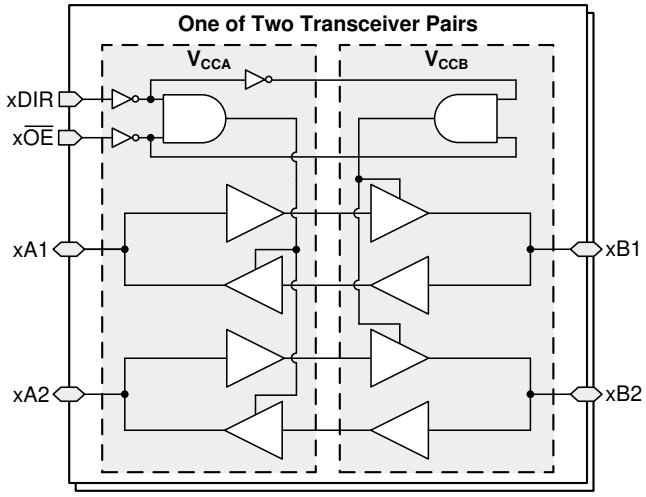

7.3 Feature Description

7.3.1 Standard CMOS Inputs

Standard CMOS inputs are high impedance and are typically modeled as a resistor in parallel with the input capacitance given in the *Electrical Characteristics*. The worst case resistance is calculated with the maximum input voltage, given in the *Absolute Maximum Ratings*, and the maximum input leakage current, given in the *Electrical Characteristics*, using ohm's law (R = V ÷ I).

Signals applied to the inputs need to have fast edge rates, as defined by Δt/Δv in *Recommended Operating Conditions* to avoid excessive current consumption and oscillations. If a slow or noisy input signal is required, a device with a Schmitt-trigger input should be used to condition the input signal prior to the standard CMOS input.

7.3.2 Balanced High-Drive CMOS Push-Pull Outputs

A balanced output allows the device to sink and source similar currents. The high drive capability of this device creates fast edges into light loads so routing and load conditions should be considered to prevent ringing. Additionally, the outputs of this device are capable of driving larger currents than the device can sustain without being damaged. The electrical and thermal limits defined in the *Absolute Maximum Ratings* must be followed at all times.

7.3.3 Partial Power Down (I_{off})

The inputs and outputs for this device enter a high-impedance state when the device is powered down, inhibiting current backflow into the device. The maximum leakage into or out of any input or output pin on the device is specified by I_{off} in the *Electrical Characteristics*.

7.3.4 V_{CC} Isolation

The inputs and outputs for this device enter a high-impedance state when either supply is <100mV.

Copyright © 2024 Texas Instruments Incorporated

7.3.5 Over-voltage Tolerant Inputs

Input signals to this device can be driven above the supply voltage so long as they remain below the maximum input voltage value specified in the *Recommended Operating Conditions*.

7.3.6 Glitch-free Power Supply Sequencing

Either supply rail may be powered on or off in any order without producing a glitch on the I/Os (that is, where the output erroneously transitions to VCC when it should be held low). Glitches of this nature can be misinterpreted by a peripheral as a valid data bit, which could trigger a false device reset of the peripheral, a false device configuration of the peripheral, or even a false data initialization by the peripheral. For more information regarding the power up glitch performance of the AXC family of level translators, see the *Glitch Free Power Sequencing With AXC Level Translators* application report

7.3.7 Negative Clamping Diodes

The inputs and outputs to this device have negative clamping diodes as depicted in 図 7-1.

> **注意**
>
> Voltages beyond the values specified in the *Absolute Maximum Ratings* table can cause damage to the device. The input negative-voltage and output voltage ratings may be exceeded if the input and output clamp-current ratings are observed.

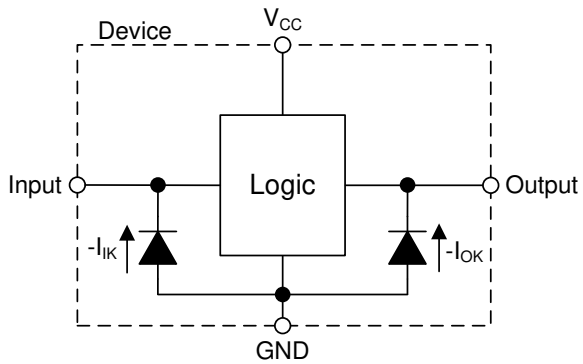

図 7-1. Electrical Placement of Clamping Diodes for Each Input and Output

7.3.8 Fully Configurable Dual-Rail Design

Both the V_{CCA} and V_{CCB} pins can be supplied at any voltage from 0.65V to 3.6V, making the device suitable for translating between any of the voltage nodes (0.7V, 0.8V, 0.9V, 1.2V, 1.8V, 2.5V and 3.3V).

7.3.9 I/Os with Integrated Static Pull-Down Resistors

To avoid floating inputs on the I/Os, this device has 71kΩ typical integrated weak pull-downs on all data I/Os. This feature allows all inputs to be left floating without the concern for unstable outputs or increased current consumption. This also reduces external component count for applications where not all channels are used or need to be fixed low. If an external pull-up is required, then it should be no larger than 7kΩ to avoid contention with the 71kΩ internal pull-down.

7.3.10 Supports High-Speed Translation

The SN74AXC4T245 device can support high data-rate applications. The translated signal data rate can be up to 380Mbps when the signal is translated from 1.8V to 3.3V.

7.4 Device Functional Modes

表 7-1. Function Table (Each 2-Bit Section)

CONTROL INPUTS[1]		PORT STATUS		OPERATION
$\overline{OE}$	DIR	A PORT	B PORT	
L	L	Output (Enabled)	Input (Hi-Z)	B data to A bus
L	H	Input (Hi-Z)	Output (Enabled)	A data to B bus
H	X	Input (Hi-Z)	Input (Hi-Z)	Isolation

(1) Input circuits of the data I/Os are always active.

Copyright © 2024 Texas Instruments Incorporated

8 Application and Implementation

注

以下のアプリケーション情報は、TI の製品仕様に含まれるものではなく、TI ではその正確性または完全性を保証いたしません。個々の目的に対する製品の適合性については、お客様の責任で判断していただくことになります。お客様は自身の設計実装を検証しテストすることで、システムの機能を確認する必要があります。

8.1 Application Information

The SN74AXC4T245 device can be used in level-translation applications for interfacing devices or systems operating at different interface voltages with one another. The SN74AXC4T245 device is ideal for use in applications where a push-pull driver is connected to the data I/Os. The max data rate can be up to 380Mbps when device translates a signal from 1.8V to 3.3V.

One example application is shown in 図 8-1, where the SN74AXC4T245 device is used to translate a low voltage UART signal from an SoC to a higher voltage signal which properly drive the inputs of the bluetooth module, and vice versa.

8.2 Typical Application

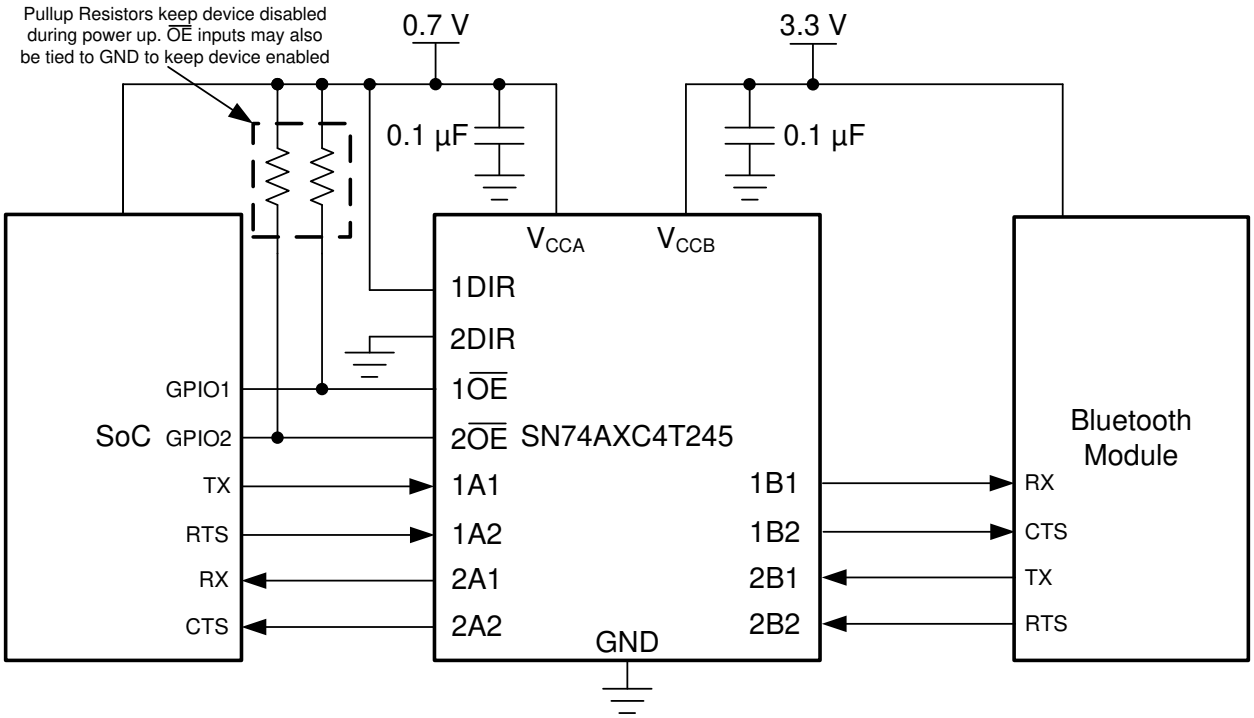

図 8-1. UART Interface Application

8.2.1 Design Requirements

For this design example, use the parameters listed in 表 8-1.

表 8-1. Design Parameters

DESIGN PARAMETERS	EXAMPLE VALUES
Input voltage range	0.65V to 3.6V
Output voltage range	0.65V to 3.6V

8.2.2 Detailed Design Procedure

To begin the design process, determine the following:

- Input voltage range
  - Use the supply voltage of the device that is driving the SN74AXC4T245 device to determine the input voltage range. For a valid logic-high, the value must exceed the high-level input voltage (V_{IH}) of the input port. For a valid logic low the value must be less than the low-level input voltage (V_{IL}) of the input port.
- Output voltage range
  - Use the supply voltage of the device that the SN74AXC4T245 device is driving to determine the output voltage range.

8.2.3 Application Curve

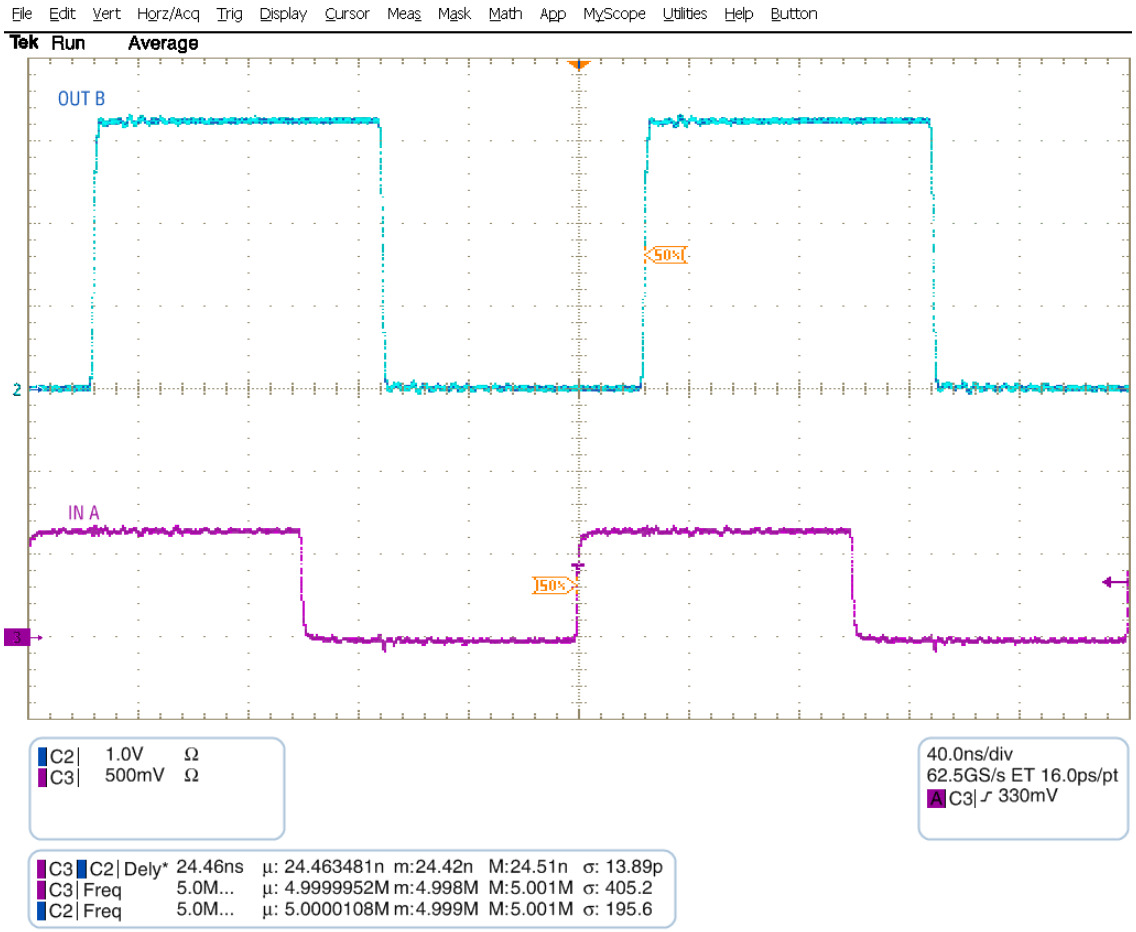

図 8-2. Up Translation at 2.5MHz (0.7V to 3.3V)

8.3 Power Supply Recommendations

Always apply a ground reference to the GND pins first. This device is designed for glitch free power sequencing without any supply sequencing requirements such as ramp order or ramp rate.

This device was designed with various power supply sequencing methods in mind to help prevent unintended triggering of downstream devices. For more information regarding the power up glitch performance of the AXC family of level translators, see the *Glitch Free Power Sequencing With AXC Level Translators* application report

Copyright © 2024 Texas Instruments Incorporated

8.4 Layout

8.4.1 Layout Guidelines

For device reliability, it is recommended to follow common printed-circuit board layout guidelines such as follows:

- Use bypass capacitors on the power supply pins and place them as close to the device as possible.
- Use short trace lengths to avoid excessive loading.

8.4.2 Layout Example

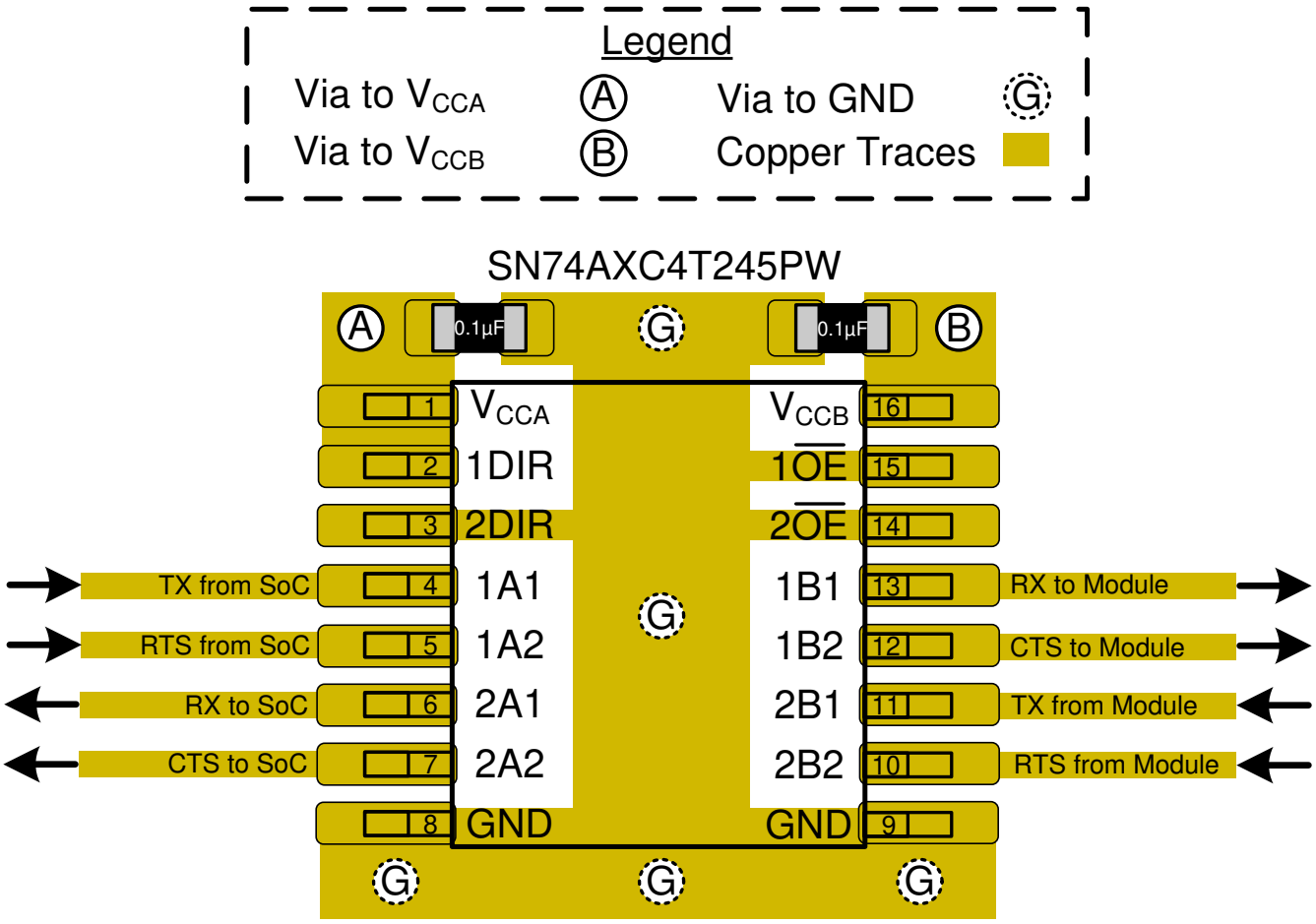

図 8-3. Layout Example

9 Device and Documentation Support

9.1 Documentation Support

9.1.1 Related Documentation

For related documentation, see the following:

- Texas Instruments, *Implications of Slow or Floating CMOS Inputs* application report
- Texas Instruments, *Power Sequencing for AXC Family of Devices* application report

9.2 ドキュメントの更新通知を受け取る方法

ドキュメントの更新についての通知を受け取るには、www.tij.co.jp のデバイス製品フォルダを開いてください。[通知] をクリックして登録すると、変更されたすべての製品情報に関するダイジェストを毎週受け取ることができます。 変更の詳細については、改訂されたドキュメントに含まれている改訂履歴をご覧ください。

9.3 サポート・リソース

テキサス・インスツルメンツ E2E™ サポート・フォーラムは、エンジニアが検証済みの回答と設計に関するヒントをエキスパートから迅速かつ直接得ることができる場所です。既存の回答を検索したり、独自の質問をしたりすることで、設計で必要な支援を迅速に得ることができます。

リンクされているコンテンツは、各寄稿者により「現状のまま」提供されるものです。これらはテキサス・インスツルメンツの仕様を構成するものではなく、必ずしもテキサス・インスツルメンツの見解を反映したものではありません。テキサス・インスツルメンツの使用条件を参照してください。

9.4 Trademarks

テキサス・インスツルメンツ E2E™ is a trademark of Texas Instruments.
すべての商標は、それぞれの所有者に帰属します。

9.5 静電気放電に関する注意事項

この IC は、ESD によって破損する可能性があります。テキサス・インスツルメンツは、IC を取り扱う際には常に適切な注意を払うことを推奨します。正しい取り扱いおよび設置手順に従わない場合、デバイスを破損するおそれがあります。

ESD による破損は、わずかな性能低下からデバイスの完全な故障まで多岐にわたります。精密な IC の場合、パラメータがわずかに変化するだけで公表されている仕様から外れる可能性があるため、破損が発生しやすくなっています。

9.6 用語集

テキサス・インスツルメンツ用語集　　この用語集には、用語や略語の一覧および定義が記載されています。

10 Revision History

資料番号末尾の英字は改訂を表しています。その改訂履歴は英語版に準じています。

Changes from Revision A (July 2020) to Revision B (April 2024)	Page
• Added the *I/Os with Integrated Static Pull-Down Resistors* section	19

Changes from Revision * (December 2018) to Revision A (July 2020)	Page
• ドキュメント全体にわたって表、図、相互参照の採番方法を更新。	1
• 「*製品情報*」表に BQB (WQFN) パッケージ オプションを追加	1

Copyright © 2024 Texas Instruments Incorporated

11 Mechanical, Packaging, and Orderable Information

The following pages include mechanical, packaging, and orderable information. This information is the most current data available for the designated devices. This data is subject to change without notice and revision of this document. For browser-based versions of this data sheet, refer to the left-hand navigation.

重要なお知らせと免責事項

テキサス・インスツルメンツは、技術データと信頼性データ (データシートを含みます)、設計リソース (リファレンス デザインを含みます)、アプリケーションや設計に関する各種アドバイス、Web ツール、安全性情報、その他のリソースを、欠陥が存在する可能性のある「現状のまま」提供しており、商品性および特定目的に対する適合性の黙示保証、第三者の知的財産権の非侵害保証を含むいかなる保証も、明示的または黙示的にかかわらず拒否します。

これらのリソースは、テキサス・インスツルメンツ製品を使用する設計の経験を積んだ開発者への提供を意図したものです。(1) お客様のアプリケーションに適した テキサス・インスツルメンツ製品の選定、(2) お客様のアプリケーションの設計、検証、試験、(3) お客様のアプリケーションに該当する各種規格や、その他のあらゆる安全性、セキュリティ、規制、または他の要件への確実な適合に関する責任を、お客様のみが単独で負うものとします。

上記の各種リソースは、予告なく変更される可能性があります。これらのリソースは、リソースで説明されている テキサス・インスツルメンツ製品を使用するアプリケーションの開発の目的でのみ、テキサス・インスツルメンツはその使用をお客様に許諾します。これらのリソースに関して、他の目的で複製することや掲載することは禁止されています。テキサス・インスツルメンツや第三者の知的財産権のライセンスが付与されている訳ではありません。お客様は、これらのリソースを自身で使用した結果発生するあらゆる申し立て、損害、費用、損失、責任について、テキサス・インスツルメンツおよびその代理人を完全に補償するものとし、テキサス・インスツルメンツは一切の責任を拒否します。

テキサス・インスツルメンツの製品は、テキサス・インスツルメンツの販売条件、または ti.com やかかる テキサス・インスツルメンツ製品の関連資料などのいずれかを通じて提供する適用可能な条項の下で提供されています。テキサス・インスツルメンツがこれらのリソースを提供することは、適用される テキサス・インスツルメンツの保証または他の保証の放棄の拡大や変更を意味するものではありません。

お客様がいかなる追加条項または代替条項を提案した場合でも、テキサス・インスツルメンツはそれらに異議を唱え、拒否します。

郵送先住所：Texas Instruments, Post Office Box 655303, Dallas, Texas 75265
Copyright © 2024, Texas Instruments Incorporated

PACKAGING INFORMATION

Orderable part number	Status (1)	Material type (2)	Package | Pins	Package qty | Carrier	RoHS (3)	Lead finish/ Ball material (4)	MSL rating/ Peak reflow (5)	Op temp (°C)	Part marking (6)
SN74AXC4T245BQBR	Active	Production	WQFN (BQB) | 16	3000 | LARGE T&R	Yes	SN	Level-1-260C-UNLIM	-40 to 125	4T245
SN74AXC4T245BQBR.A	Active	Production	WQFN (BQB) | 16	3000 | LARGE T&R	Yes	SN	Level-1-260C-UNLIM	-40 to 125	4T245
SN74AXC4T245BQBRG4	Active	Production	WQFN (BQB) | 16	3000 | LARGE T&R	Yes	NIPDAU	Level-1-260C-UNLIM	-40 to 125	4T245
SN74AXC4T245BQBRG4.A	Active	Production	WQFN (BQB) | 16	3000 | LARGE T&R	Yes	NIPDAU	Level-1-260C-UNLIM	-40 to 125	4T245
SN74AXC4T245PWR	Active	Production	TSSOP (PW) | 16	2000 | LARGE T&R	Yes	NIPDAU | SN	Level-1-260C-UNLIM	-40 to 125	SN4T245
SN74AXC4T245PWR.A	Active	Production	TSSOP (PW) | 16	2000 | LARGE T&R	Yes	NIPDAU	Level-1-260C-UNLIM	-40 to 125	SN4T245
SN74AXC4T245PWRG4	Active	Production	TSSOP (PW) | 16	2000 | LARGE T&R	Yes	NIPDAU	Level-1-260C-UNLIM	-40 to 125	SN4T245
SN74AXC4T245PWRG4.A	Active	Production	TSSOP (PW) | 16	2000 | LARGE T&R	Yes	NIPDAU	Level-1-260C-UNLIM	-40 to 125	SN4T245
SN74AXC4T245RSVR	Active	Production	UQFN (RSV) | 16	3000 | LARGE T&R	Yes	NIPDAU	Level-1-260C-UNLIM	-40 to 125	1TIR
SN74AXC4T245RSVR.A	Active	Production	UQFN (RSV) | 16	3000 | LARGE T&R	Yes	NIPDAU	Level-1-260C-UNLIM	-40 to 125	1TIR
SN74AXC4T245RSVRG4.A	Active	Production	UQFN (RSV) | 16	3000 | LARGE T&R	Yes	NIPDAU	Level-1-260C-UNLIM	-40 to 125	1TIR

(1) **Status:** For more details on status, see our product life cycle.

(2) **Material type:** When designated, preproduction parts are prototypes/experimental devices, and are not yet approved or released for full production. Testing and final process, including without limitation quality assurance, reliability performance testing, and/or process qualification, may not yet be complete, and this item is subject to further changes or possible discontinuation. If available for ordering, purchases will be subject to an additional waiver at checkout, and are intended for early internal evaluation purposes only. These items are sold without warranties of any kind.

(3) **RoHS values:** Yes, No, RoHS Exempt. See the TI RoHS Statement for additional information and value definition.

(4) **Lead finish/Ball material:** Parts may have multiple material finish options. Finish options are separated by a vertical ruled line. Lead finish/Ball material values may wrap to two lines if the finish value exceeds the maximum column width.

(5) **MSL rating/Peak reflow:** The moisture sensitivity level ratings and peak solder (reflow) temperatures. In the event that a part has multiple moisture sensitivity ratings, only the lowest level per JEDEC standards is shown. Refer to the shipping label for the actual reflow temperature that will be used to mount the part to the printed circuit board.

(6) **Part marking:** There may be an additional marking, which relates to the logo, the lot trace code information, or the environmental category of the part.

Multiple part markings will be inside parentheses. Only one part marking contained in parentheses and separated by a "~" will appear on a part. If a line is indented then it is a continuation of the previous line and the two combined represent the entire part marking for that device.

Important Information and Disclaimer: The information provided on this page represents TI's knowledge and belief as of the date that it is provided. TI bases its knowledge and belief on information provided by third parties, and makes no representation or warranty as to the accuracy of such information. Efforts are underway to better integrate information from third parties. TI has taken and continues to take reasonable steps to provide representative and accurate information but may not have conducted destructive testing or chemical analysis on incoming materials and chemicals. TI and TI suppliers consider certain information to be proprietary, and thus CAS numbers and other limited information may not be available for release.

In no event shall TI's liability arising out of such information exceed the total purchase price of the TI part(s) at issue in this document sold by TI to Customer on an annual basis.

OTHER QUALIFIED VERSIONS OF SN74AXC4T245 :

- Automotive : SN74AXC4T245-Q1

NOTE: Qualified Version Definitions:

- Automotive - Q100 devices qualified for high-reliability automotive applications targeting zero defects

TAPE AND REEL INFORMATION

REEL DIMENSIONS

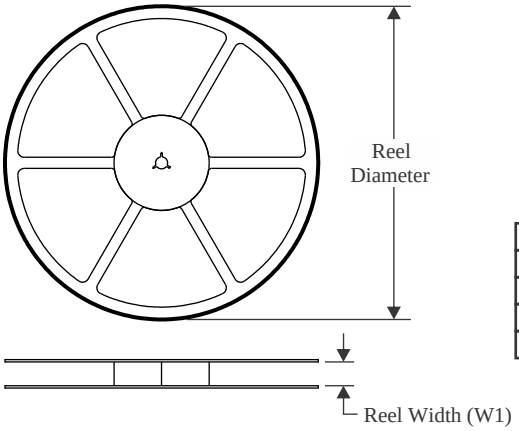

TAPE DIMENSIONS

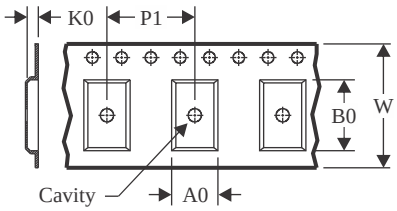

A0	Dimension designed to accommodate the component width
B0	Dimension designed to accommodate the component length
K0	Dimension designed to accommodate the component thickness
W	Overall width of the carrier tape
P1	Pitch between successive cavity centers

QUADRANT ASSIGNMENTS FOR PIN 1 ORIENTATION IN TAPE

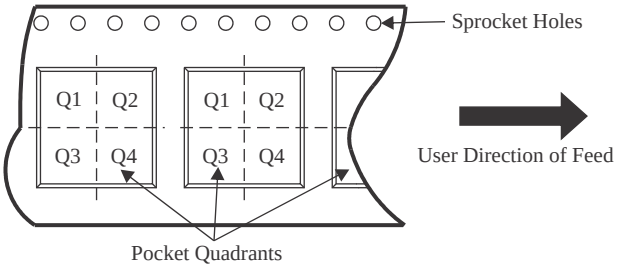

*All dimensions are nominal

Device	Package Type	Package Drawing	Pins	SPQ	Reel Diameter (mm)	Reel Width W1 (mm)	A0 (mm)	B0 (mm)	K0 (mm)	P1 (mm)	W (mm)	Pin1 Quadrant
SN74AXC4T245BQBR	WQFN	BQB	16	3000	180.0	12.4	2.8	3.8	1.2	4.0	12.0	Q1
SN74AXC4T245BQBRG4	WQFN	BQB	16	3000	180.0	12.4	2.8	3.8	1.2	4.0	12.0	Q1
SN74AXC4T245PWR	TSSOP	PW	16	2000	330.0	12.4	6.9	5.6	1.6	8.0	12.0	Q1
SN74AXC4T245PWR	TSSOP	PW	16	2000	330.0	12.4	6.9	5.6	1.6	8.0	12.0	Q1
SN74AXC4T245PWRG4	TSSOP	PW	16	2000	330.0	12.4	6.9	5.6	1.6	8.0	12.0	Q1
SN74AXC4T245RSVR	UQFN	RSV	16	3000	178.0	13.5	2.1	2.9	0.75	4.0	12.0	Q1

TAPE AND REEL BOX DIMENSIONS

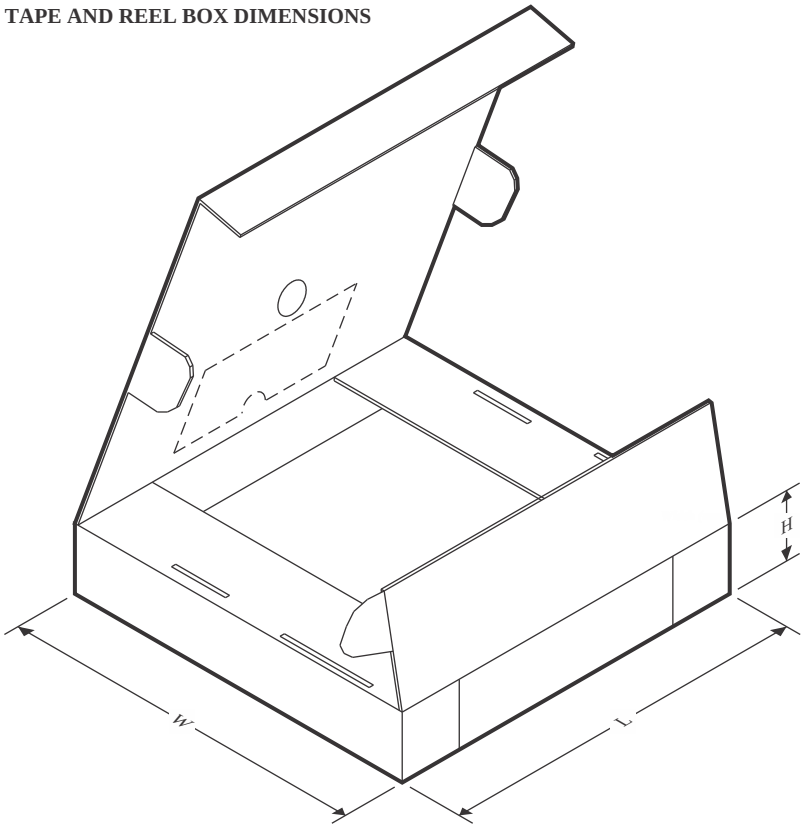

*All dimensions are nominal

Device	Package Type	Package Drawing	Pins	SPQ	Length (mm)	Width (mm)	Height (mm)
SN74AXC4T245BQBR	WQFN	BQB	16	3000	210.0	185.0	35.0
SN74AXC4T245BQBRG4	WQFN	BQB	16	3000	210.0	185.0	35.0
SN74AXC4T245PWR	TSSOP	PW	16	2000	364.0	364.0	27.0
SN74AXC4T245PWR	TSSOP	PW	16	2000	356.0	356.0	35.0
SN74AXC4T245PWRG4	TSSOP	PW	16	2000	353.0	353.0	32.0
SN74AXC4T245RSVR	UQFN	RSV	16	3000	189.0	185.0	36.0

GENERIC PACKAGE VIEW

RSV 16

UQFN - 0.55 mm max height

1.8 x 2.6, 0.4 mm pitch

ULTRA THIN QUAD FLATPACK - NO LEAD

This image is a representation of the package family, actual package may vary.
Refer to the product data sheet for package details.

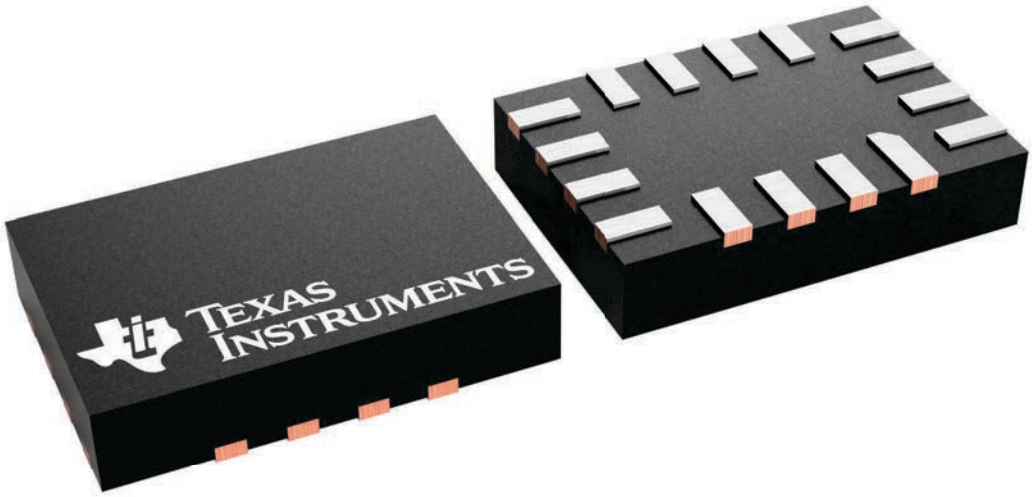

4231225/A

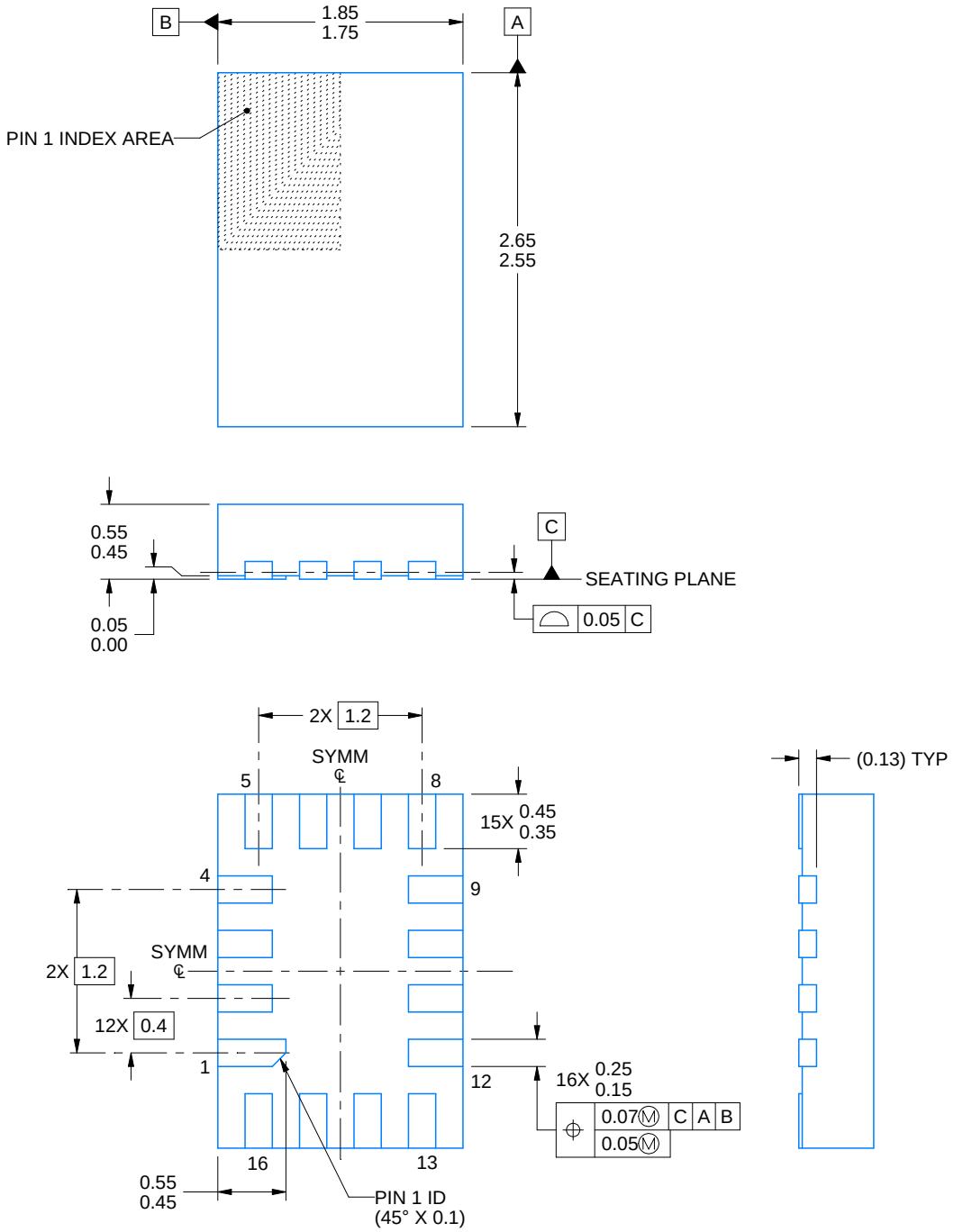

NOTES:

1. All linear dimensions are in millimeters. Any dimensions in parenthesis are for reference only. Dimensioning and tolerancing per ASME Y14.5M.
2. This drawing is subject to change without notice.

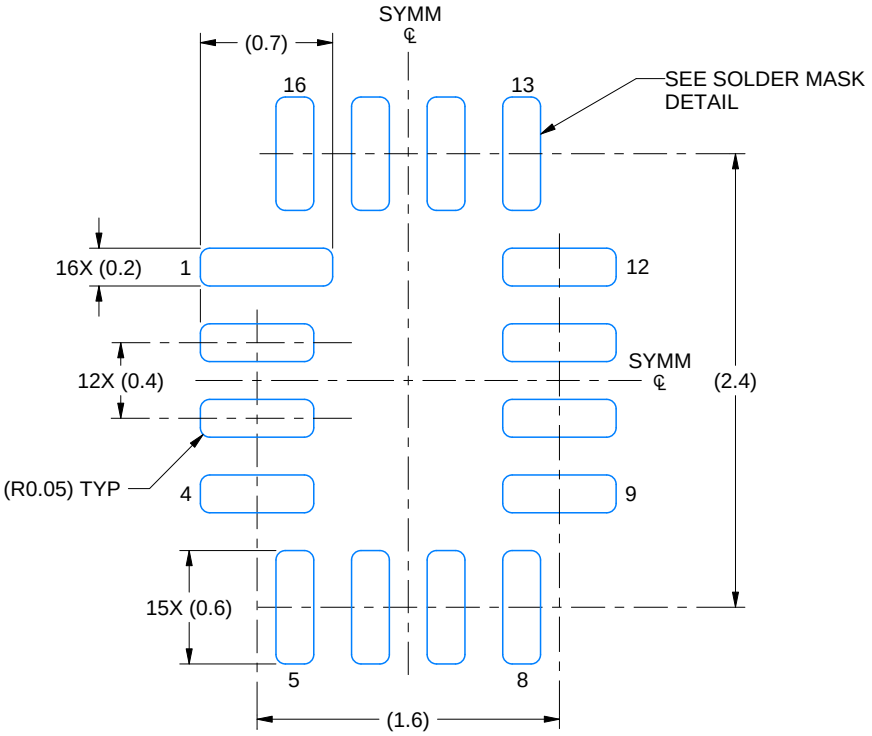

LAND PATTERN EXAMPLE
EXPOSED METAL SHOWN
SCALE: 25X

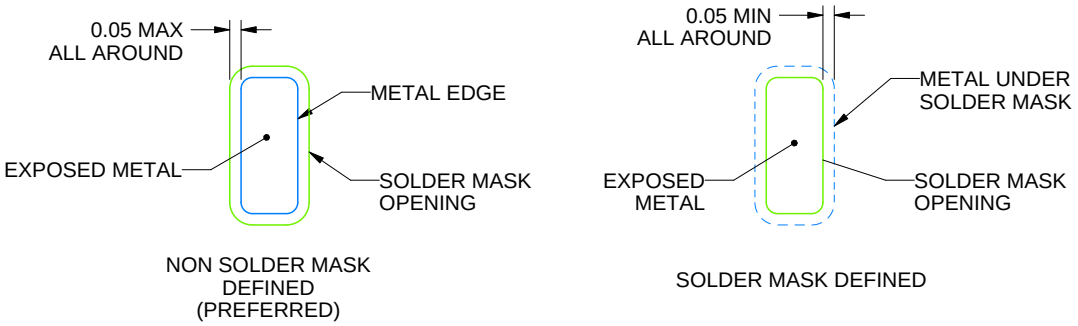

SOLDER MASK DETAILS

4220314/C 02/2020

NOTES: (continued)

3. For more information, see Texas Instruments literature number SLUA271 (www.ti.com/lit/slua271).

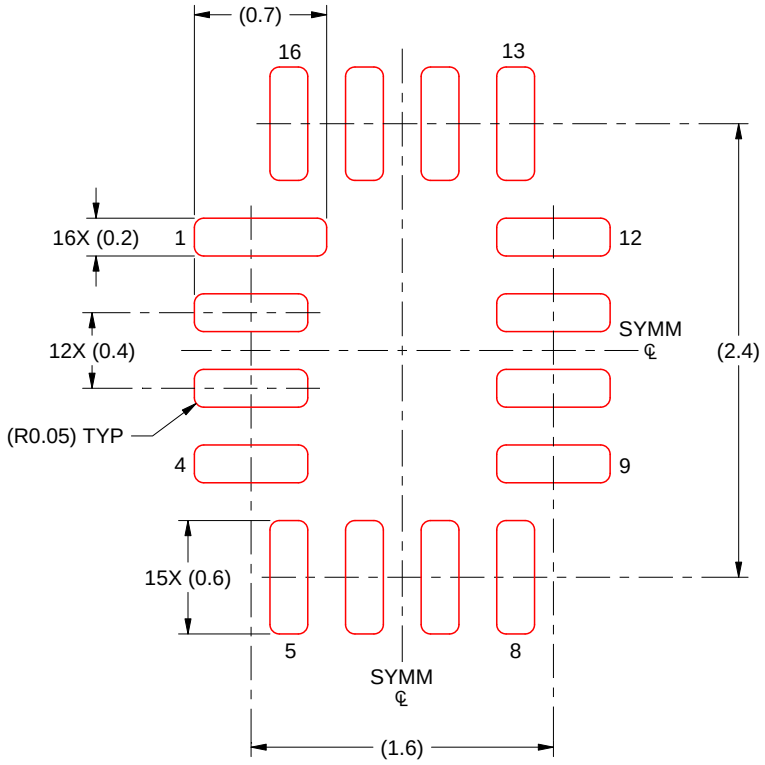

SOLDER PASTE EXAMPLE
BASED ON 0.125 MM THICK STENCIL
SCALE: 25X

4220314/C 02/2020

NOTES: (continued)

4. Laser cutting apertures with trapezoidal walls and rounded corners may offer better paste release. IPC-7525 may have alternate design recommendations.

GENERIC PACKAGE VIEW

BQB 16

WQFN - 0.8 mm max height

2.5 x 3.5, 0.5 mm pitch

PLASTIC QUAD FLATPACK - NO LEAD

This image is a representation of the package family, actual package may vary.
Refer to the product data sheet for package details.

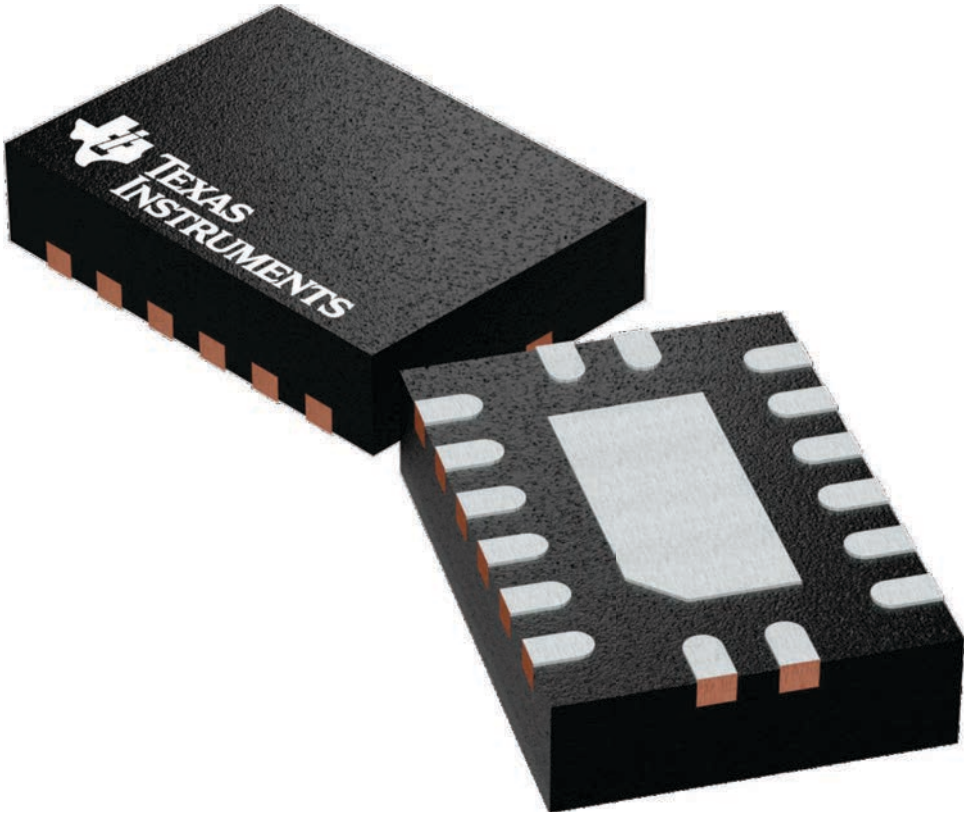

4226161/A

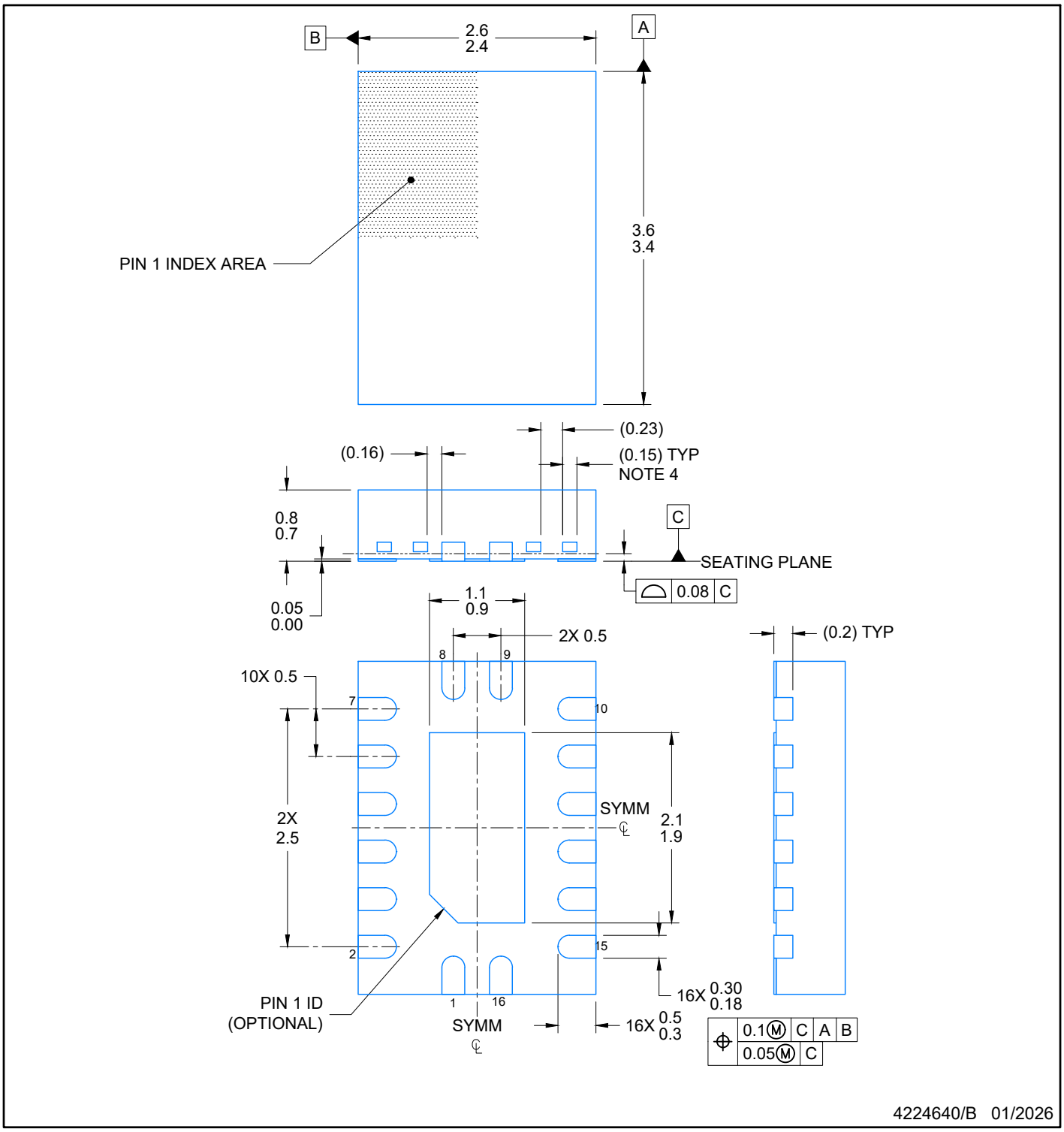

NOTES:

1. All linear dimensions are in millimeters. Any dimensions in parenthesis are for reference only. Dimensioning and tolerancing per ASME Y14.5M.
2. This drawing is subject to change without notice.
3. The package thermal pad must be soldered to the printed circuit board for optimal thermal and mechanical performance.
4. Features may differ or may not be present

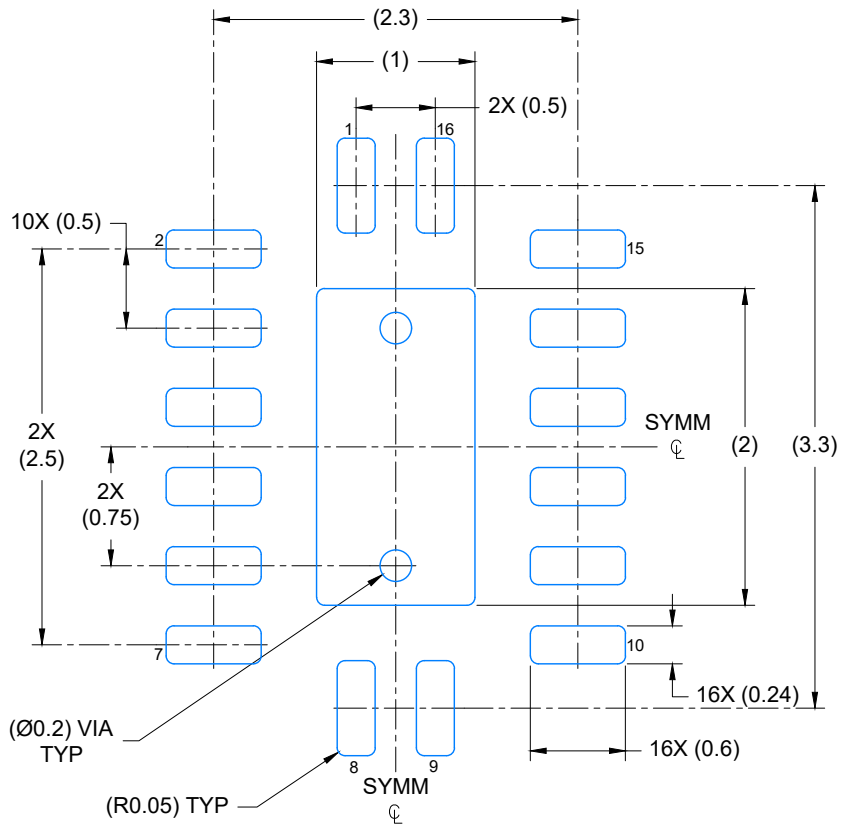

LAND PATTERN EXAMPLE
EXPOSED METAL SHOWN
SCALE: 20X

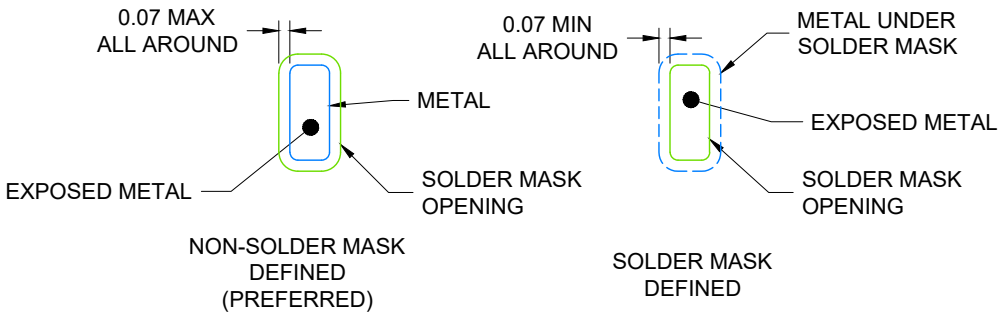

4224640/B 01/2026

1. NOTES: (continued)

   5. This package is designed to be soldered to a thermal pad on the board. For more information, see Texas Instruments literature number SLUA271 (www.ti.com/lit/slua271).

   6. Vias are optional depending on application, refer to device data sheet. If any vias are implemented, refer to their locations shown on this view. It is recommended that vias under paste be filled, plugged or tented.

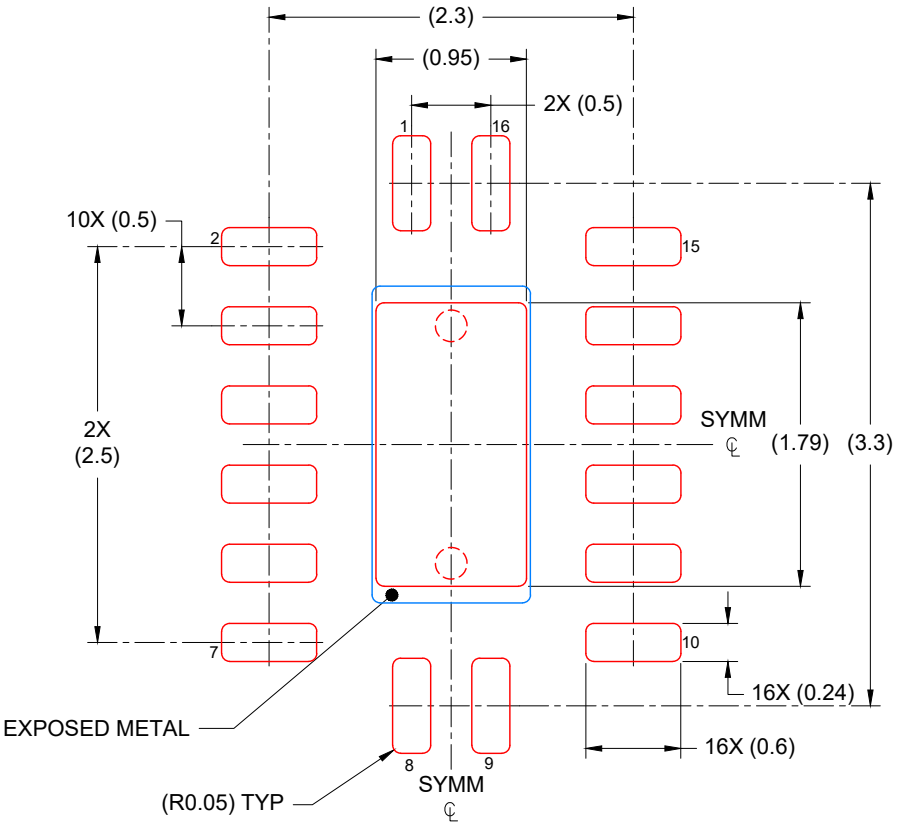

SOLDER PASTE EXAMPLE
BASED ON 0.125 mm THICK STENCIL

EXPOSED PAD
85% PRINTED COVERAGE BY AREA
SCALE: 20X

4224640/B 01/2026

NOTES: (continued)

7. Laser cutting apertures with trapezoidal walls and rounded corners may offer better paste release. IPC-7525 may have alternate design recommendations.

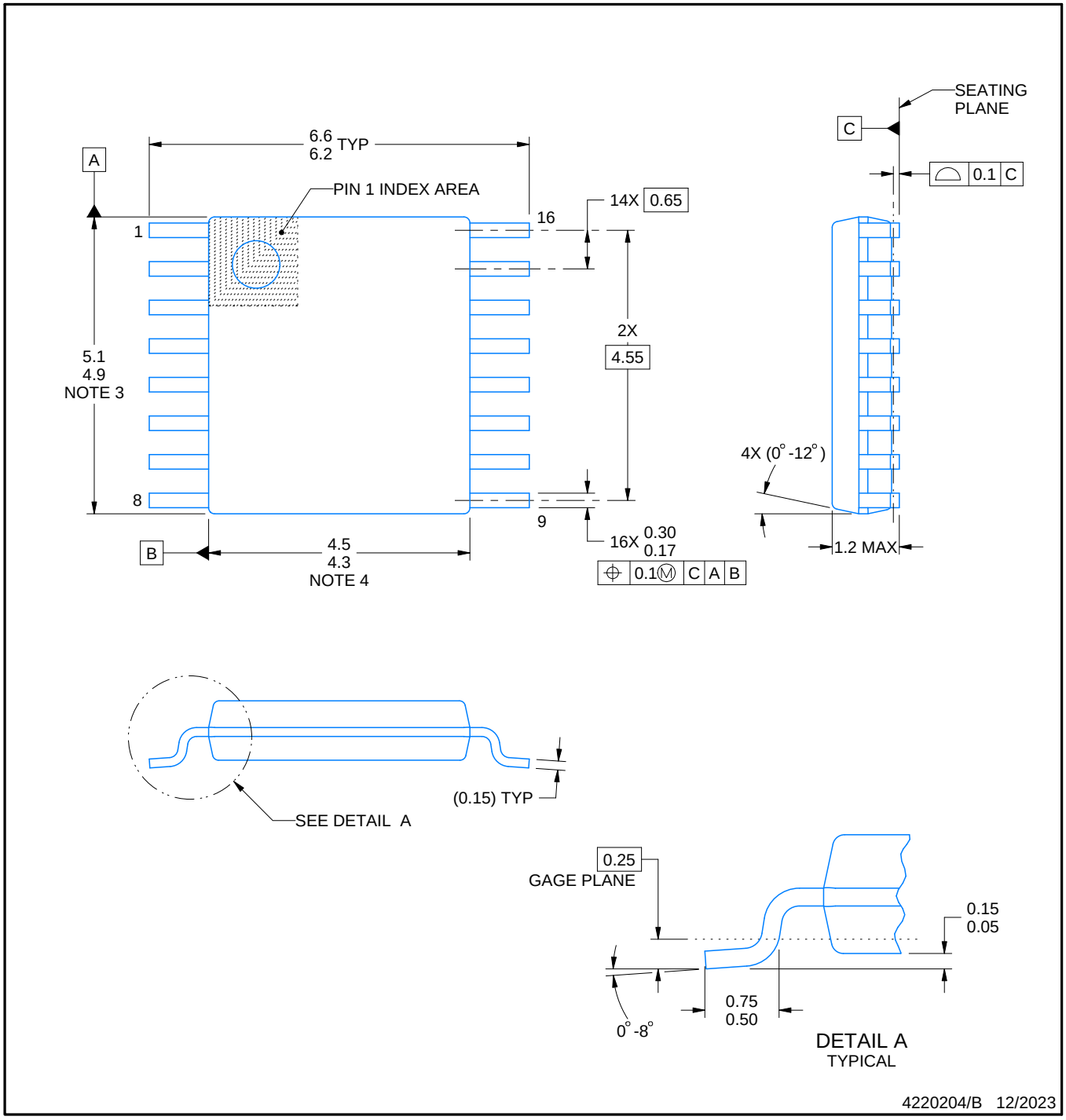

NOTES:

1. All linear dimensions are in millimeters. Any dimensions in parenthesis are for reference only. Dimensioning and tolerancing per ASME Y14.5M.
2. This drawing is subject to change without notice.
3. This dimension does not include mold flash, protrusions, or gate burrs. Mold flash, protrusions, or gate burrs shall not exceed 0.15 mm per side.
4. This dimension does not include interlead flash. Interlead flash shall not exceed 0.25 mm per side.
5. Reference JEDEC registration MO-153.

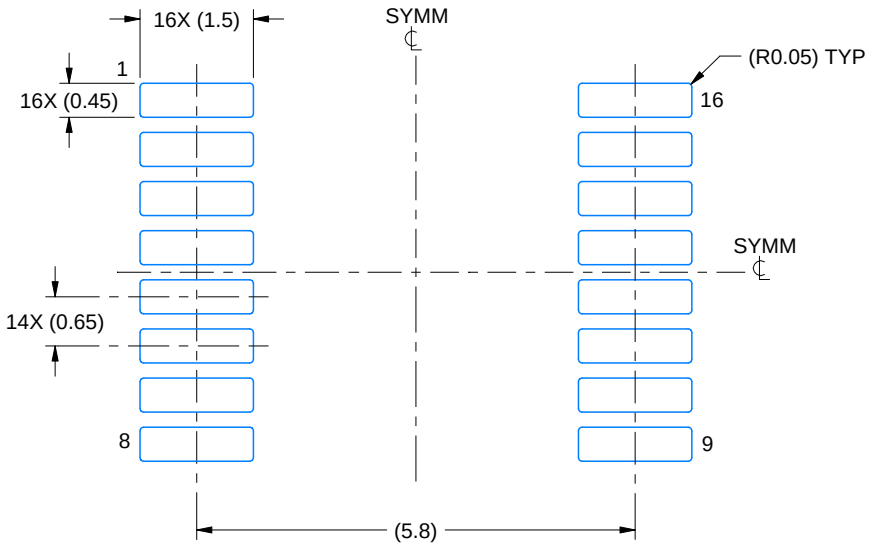

LAND PATTERN EXAMPLE
EXPOSED METAL SHOWN
SCALE: 10X

NON-SOLDER MASK DEFINED (PREFERRED)

SOLDER MASK DEFINED

SOLDER MASK DETAILS

4220204/B 12/2023

NOTES: (continued)

6. Publication IPC-7351 may have alternate designs.
7. Solder mask tolerances between and around signal pads can vary based on board fabrication site.

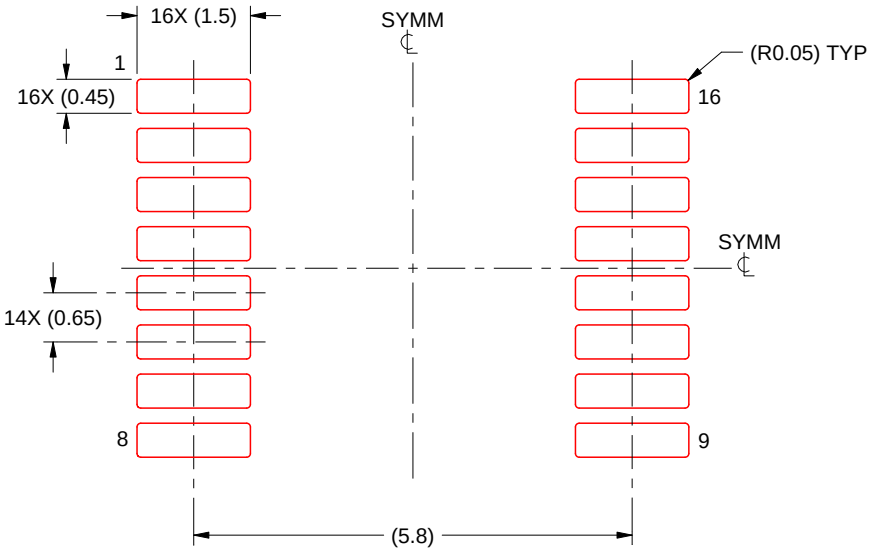

SOLDER PASTE EXAMPLE
BASED ON 0.125 mm THICK STENCIL
SCALE: 10X

4220204/B 12/2023

NOTES: (continued)

8. Laser cutting apertures with trapezoidal walls and rounded corners may offer better paste release. IPC-7525 may have alternate design recommendations.
9. Board assembly site may have different recommendations for stencil design.

重要なお知らせと免責事項

TI は、技術データと信頼性データ (データシートを含みます)、設計リソース (リファレンス デザインを含みます)、アプリケーションや設計に関する各種アドバイス、Web ツール、安全性情報、その他のリソースを、欠陥が存在する可能性のある「現状のまま」提供しており、商品性および特定目的に対する適合性の黙示保証、第三者の知的財産権の非侵害保証を含むいかなる保証も、明示的または黙示的にかかわらず拒否します。

これらのリソースは、TI 製品を使用する設計の経験を積んだ開発者への提供を意図したものです。(1) お客様のアプリケーションに適した TI 製品の選定、(2) お客様のアプリケーションの設計、検証、試験、(3) お客様のアプリケーションに該当する各種規格や、その他のあらゆる安全性、セキュリティ、規制、または他の要件への確実な適合に関する責任を、お客様のみが単独で負うものとします。

上記の各種リソースは、予告なく変更される可能性があります。これらのリソースは、リソースで説明されている TI 製品を使用するアプリケーションの開発の目的でのみ、TI はその使用をお客様に許諾します。これらのリソースに関して、他の目的で複製することや掲載することは禁止されています。TI や第三者の知的財産権のライセンスが付与されている訳ではありません。お客様は、これらのリソースを自身で使用した結果発生するあらゆる申し立て、損害、費用、損失、責任について、TI およびその代理人を完全に補償するものとし、TI は一切の責任を拒否します。

TI の製品は、 TI の販売条件 、 TI の総合的な品質ガイドライン 、 ti.com または TI 製品などに関連して提供される他の適用条件に従い提供されます。TI がこれらのリソースを提供することは、適用される TI の保証または他の保証の放棄の拡大や変更を意味するものではありません。 TI がカスタム、またはカスタマー仕様として明示的に指定していない限り、TI の製品は標準的なカタログに掲載される汎用機器です。

お客様がいかなる追加条項または代替条項を提案する場合も、TI はそれらに異議を唱え、拒否します。

Copyright © 2026, Texas Instruments Incorporated

最終更新日：2025 年 10 月