# SN74HC86-Q1 車載用クワッド 2 入力 XOR ゲート

## 1 特長

- 車載アプリケーション用に AEC-Q100 認定済み
  - デバイス温度グレード 1: -40℃～+125℃、$T_A$
- バッファ付き入力
- 正負入力クランプ・ダイオード
- 広い動作電圧範囲：2V～6V
- 最大 10 個の LSTTL 負荷ファンアウトに対応
- LSTTL ロジック IC に比べて消費電力を大幅削減

## 2 アプリケーション

- 入力信号の位相差の検出
- 選択可能なインバータ / バッファの作成

## 3 概要

このデバイスには、4 つの独立した 2 入力 XOR ゲートが内蔵されています。各ゲートはブール関数 Y = A ⊕ B を正論理で実行します。

**製品情報(1)**

| 型番 | パッケージ | 本体サイズ(公称) |
|---|---|---|
| SN74HC86QDRG4Q1 | SOIC (14) | 8.70mm×3.90mm |
| SN74HC86QPWRQ1 | TSSOP (14) | 5.00mm × 4.40mm |

(1) 提供されているすべてのパッケージについては、データシートの末尾にある注文情報を参照してください。

**SN74HC86-Q1 の機能ピン配置**

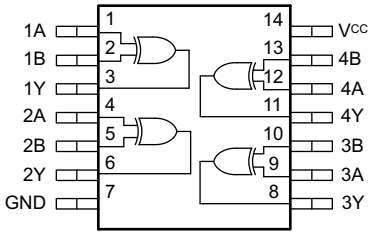


英語版のTI製品についての情報を翻訳したこの資料は、製品の概要を確認する目的で便宜的に提供しているものです。該当する正式な英語版の最新情報は、www.ti.comで閲覧でき、その内容が常に優先されます。TIでは翻訳の正確性および妥当性につきましては一切保証いたしません。実際の設計などの前には、必ず最新版の英語版をご参照くださいますようお願いいたします。

## 目次

**1** 特長 ... 1
**2** アプリケーション ... 1
**3** 概要 ... 1
**4** 改訂履歴 ... 2
**5** **Pin Configuration and Functions** ... 3
**6** **Specifications** ... 3
6.1 Absolute Maximum Ratings ... 3
6.2 ESD Ratings ... 4
6.3 Recommended Operating Conditions ... 4
6.4 Thermal Information ... 4
6.5 Electrical Characteristics ... 5
6.6 Switching Characteristics ... 5
6.7 Operating Characteristics ... 5
6.8 Typical Characteristics ... 6
**7** **Parameter Measurement Information** ... 6
**8** **Detailed Description** ... 7
8.1 Overview ... 7
8.2 Functional Block Diagram ... 7
8.3 Feature Description ... 7
8.4 Device Functional Modes ... 8
**9** **Application and Implementation** ... 9
9.1 Application Information ... 9
9.2 Typical Application ... 9
**10** **Power Supply Recommendations** ... 11
**11** **Layout** ... 11
11.1 Layout Guidelines ... 11
11.2 Layout Example ... 11
**12** デバイスおよびドキュメントのサポート ... 12
12.1 ドキュメントのサポート ... 12
12.2 関連リンク ... 12
12.3 コミュニティ・リソース ... 12
12.4 商標 ... 12
12.5 静電気放電に関する注意事項 ... 12
12.6 Glossary ... 12
**13** メカニカル、パッケージ、および注文情報 ... 12

## 4 改訂履歴

資料番号末尾の英字は改訂を表しています。その改訂履歴は英語版に準じています。

**Revision C (April 2008) から Revision D に変更** **Page**

- 新しいデータシート規格に更新 ... 1
- Changed $R_{\theta JA}$ for PW package from 113 °C/W to 151.7 °C/W ... 4
- Changed $R_{\theta JA}$ for D package from 86 °C/W to 133.6 °C/W ... 4


Copyright © 2004–2020, Texas Instruments Incorporated

# 5 Pin Configuration and Functions

**D or PW Package**
**14-Pin SOIC or TSSOP**
**Top View**

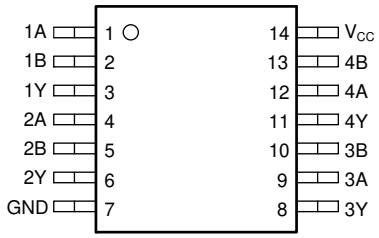


**Pin Functions**

| PIN | | I/O | DESCRIPTION |
|---|---|---|---|
| NAME | NO. | | |
| 1A | 1 | Input | Channel 1, Input A |
| 1B | 2 | Input | Channel 1, Input B |
| 1Y | 3 | Output | Channel 1, Output Y |
| 2A | 4 | Input | Channel 2, Input A |
| 2B | 5 | Input | Channel 2, Input B |
| 2Y | 6 | Output | Channel 2, Output Y |
| GND | 7 | — | Ground |
| 3Y | 8 | Output | Channel 3, Output Y |
| 3A | 9 | Input | Channel 3, Input A |
| 3B | 10 | Input | Channel 3, Input B |
| 4Y | 11 | Output | Channel 4, Output Y |
| 4A | 12 | Input | Channel 4, Input A |
| 4B | 13 | Input | Channel 4, Input B |
| $V_{CC}$ | 14 | — | Positive Supply |

# 6 Specifications

## 6.1 Absolute Maximum Ratings

over operating free-air temperature range (unless otherwise noted)[1]

| | | | MIN | MAX | UNIT |
|---|---|---|---|---|---|
| $V_{CC}$ | Supply voltage | | –0.5 | 7 | V |
| $I_{IK}$ | Input clamp current[2] | $V_I < 0$ or $V_I > V_{CC}$ | | ±20 | mA |
| $I_{OK}$ | Output clamp current[2] | $V_O < 0$ or $V_O > V_{CC}$ | | ±20 | mA |
| $I_O$ | Continuous output current | $V_O = 0$ to $V_{CC}$ | | ±25 | mA |
| | Continuous current through $V_{CC}$ or GND | | | ±50 | mA |
| $T_J$ | Junction temperature[3] | | | 150 | °C |
| $T_{stg}$ | Storage temperature | | –65 | 150 | °C |

(1) Stresses beyond those listed under *Absolute Maximum Rating* may cause permanent damage to the device. These are stress ratings only, which do not imply functional operation of the device at these or any other conditions beyond those indicated under *Recommended Operating Condition*. Exposure to absolute-maximum-rated conditions for extended periods may affect device reliability.
(2) The input and output voltage ratings may be exceeded if the input and output current ratings are observed.
(3) Guaranteed by design.

Copyright © 2004–2020, Texas Instruments Incorporated

## 6.2 ESD Ratings

| | | | VALUE | UNIT |
|---|---|---|---|---|
| $V_{(ESD)}$ | Electrostatic discharge | Human body model (HBM), per AEC Q100-002[(1)] HBM ESD Classification Level 2 | ±2000 | V |
| | | Charged device model (CDM), per AEC Q100-011 CDM ESD Classification Level C6 | ±1000 | |

(1) AEC Q100-002 indicate that HBM stressing shall be in accordance with the ANSI/ESDA/JEDEC JS-001 specification.

## 6.3 Recommended Operating Conditions

over operating free-air temperature range (unless otherwise noted)

| | | | MIN | NOM | MAX | UNIT |
|---|---|---|---|---|---|---|
| $V_{CC}$ | Supply voltage | | 2 | 5 | 6 | V |
| $V_{IH}$ | High-level input voltage | $V_{CC}$ = 2 V | 1.5 | | | V |
| | | $V_{CC}$ = 4.5 V | 3.15 | | | |
| | | $V_{CC}$ = 6 V | 4.2 | | | |
| $V_{IL}$ | Low-level input voltage | $V_{CC}$ = 2 V | | | 0.5 | V |
| | | $V_{CC}$ = 4.5 V | | | 1.35 | |
| | | $V_{CC}$ = 6 V | | | 1.8 | |
| $V_I$ | Input voltage | | 0 | | $V_{CC}$ | V |
| $V_O$ | Output voltage | | 0 | | $V_{CC}$ | V |
| $\Delta t/\Delta v$ | Input transition rise and fall rate | $V_{CC}$ = 2 V | | | 1000 | ns |
| | | $V_{CC}$ = 4.5 V | | | 500 | |
| | | $V_{CC}$ = 6 V | | | 400 | |
| $T_A$ | Operating free-air temperature | SN74HC00-Q1 | –40 | | 125 | °C |

## 6.4 Thermal Information

| THERMAL METRIC | | SN74HC86-Q1 | | UNIT |
|---|---|---|---|---|
| | | PW (TSSOP) | D (SOIC) | |
| | | 14 PINS | 14 PINS | |
| $R_{\theta JA}$ | Junction-to-ambient thermal resistance | 151.7 | 133.6 | °C/W |
| $R_{\theta JC(top)}$ | Junction-to-case (top) thermal resistance | 79.4 | 89.0 | °C/W |
| $R_{\theta JB}$ | Junction-to-board thermal resistance | 94.7 | 89.5 | °C/W |
| $\Psi_{JT}$ | Junction-to-top characterization parameter | 25.2 | 45.5 | °C/W |
| $\Psi_{JB}$ | Junction-to-board characterization parameter | 94.1 | 89.1 | °C/W |
| $R_{\theta JC(bot)}$ | Junction-to-case (bottom) thermal resistance | N/A | N/A | °C/W |


Copyright © 2004–2020, Texas Instruments Incorporated

## 6.5 Electrical Characteristics

over operating free-air temperature range; typical values measured at $T_A$ = 25°C (unless otherwise noted).

| PARAMETER | | TEST CONDITIONS | | $V_{CC}$ | Operating free-air temperature ($T_A$) | | | | | | UNIT |
|---|---|---|---|---|---|---|---|---|---|---|---|
| | | | | | –40°C to 85°C | | | –40°C to 125°C | | | |
| | | | | | MIN | TYP | MAX | MIN | TYP | MAX | |
| $V_{OH}$ | High-level output voltage | $V_I = V_{IH}$ or $V_{IL}$ | $I_{OH}$ = -20 µA | 2 V | 1.9 | | | 1.9 | | | V |
| | | | | 4.5 V | 4.4 | | | 4.4 | | | |
| | | | | 6 V | 5.9 | | | 5.9 | | | |
| | | | $I_{OH}$ = -4 mA | 4.5 V | 3.84 | | | 3.7 | | | |
| | | | $I_{OH}$ = -5.2 mA | 6 V | 5.34 | | | 5.2 | | | |
| $V_{OL}$ | Low-level output voltage | $V_I = V_{IH}$ or $V_{IL}$ | $I_{OL}$ = 20 µA | 2 V | | | 0.1 | | | 0.1 | V |
| | | | | 4.5 V | | | 0.1 | | | 0.1 | |
| | | | | 6 V | | | 0.1 | | | 0.1 | |
| | | | $I_{OL}$ = 4 mA | 4.5 V | | | 0.33 | | | 0.4 | |
| | | | $I_{OL}$ = 5.2 mA | 6 V | | | 0.33 | | | 0.4 | |
| $I_I$ | Input leakage current | $V_I = V_{CC}$ or 0 | | 6 V | | | ±1000 | | | ±1000 | nA |
| $I_{CC}$ | Supply current | $V_I = V_{CC}$ or 0 | $I_O$ = 0 | 6 V | | | 20 | | | 40 | µA |
| $C_i$ | Input capacitance | | | 2 V to 6 V | | | 10 | | | 10 | pF |

## 6.6 Switching Characteristics

over operating free-air temperature range (unless otherwise noted), $C_L$ = 50 pF

| PARAMETER | | FROM | TO | $V_{CC}$ | Operating free-air temperature ($T_A$) | | | | | | UNIT |
|---|---|---|---|---|---|---|---|---|---|---|---|
| | | | | | –40°C to 85°C | | | –40°C to 125°C | | | |
| | | | | | MIN | TYP | MAX | MIN | TYP | MAX | |
| $t_{pd}$ | Propagation delay | A or B | Y | 2 V | | | 125 | | | 150 | ns |
| | | | | 4.5 V | | | 25 | | | 30 | |
| | | | | 6 V | | | 21 | | | 25 | |
| $t_t$ | Transition-time | | Y | 2 V | | | 95 | | | 110 | ns |
| | | | | 4.5 V | | | 19 | | | 22 | |
| | | | | 6 V | | | 16 | | | 19 | |

## 6.7 Operating Characteristics

over operating free-air temperature range; typical values measured at $T_A$ = 25°C (unless otherwise noted).

| PARAMETER | | TEST CONDITIONS | MIN | TYP | MAX | UNIT |
|---|---|---|---|---|---|---|
| $C_{pd}$ | Power dissipation capacitance per gate | No load | | 35 | | pF |

Copyright © 2004–2020, Texas Instruments Incorporated

## 6.8 Typical Characteristics

$T_A$ = 25°C

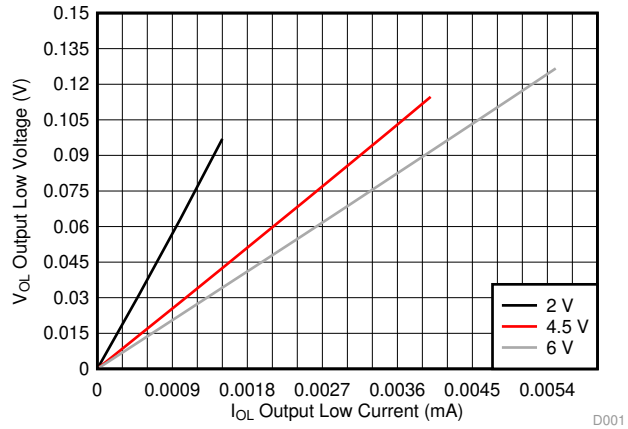


**図 1. Output voltage versus output current in low state**

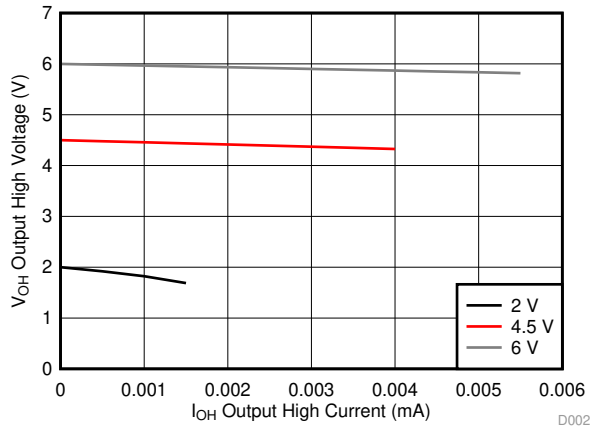


**図 2. Output voltage versus output current in high state**

## 7 Parameter Measurement Information

- Phase relationships between waveforms were chosen arbitrarily. All input pulses are supplied by generators having the following characteristics: PRR ≤ 1 MHz, $Z_O$ = 50 Ω, $t_t$ < 6 ns.
- The outputs are measured one at a time, with one input transition per measurement.

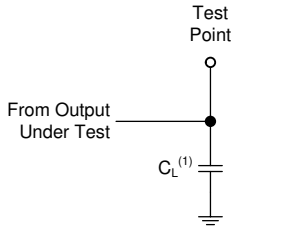


$C_L$= 50 pF and includes probe and jig capacitance.

**図 3. Load Circuit**

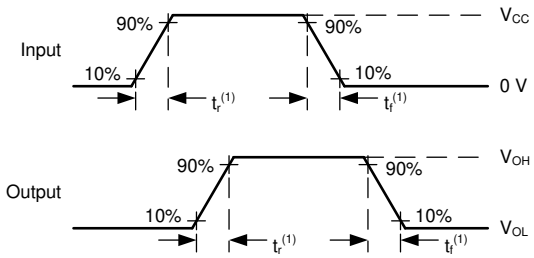


**図 4. Voltage Waveforms Transition Times**

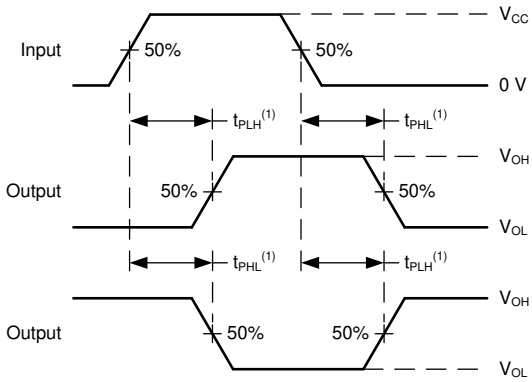


The maximum between $t_{PLH}$ and $T_{PHL}$ is used for $t_{pd}$.

**図 5. Voltage Waveforms Propagation Delays**


Copyright © 2004–2020, Texas Instruments Incorporated

# 8 Detailed Description

## 8.1 Overview

This device contains four independent 2-input XOR gates. Each gate performs the Boolean function Y = A ⊕ B in positive logic.

## 8.2 Functional Block Diagram

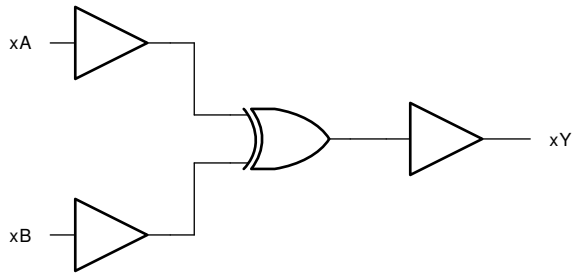


## 8.3 Feature Description

### 8.3.1 Balanced CMOS Push-Pull Outputs

A balanced output allows the device to sink and source similar currents. The drive capability of this device may create fast edges into light loads so routing and load conditions should be considered to prevent ringing. Additionally, the outputs of this device are capable of driving larger currents than the device can sustain without being damaged. It is important for the output power of the device to be limited to avoid damage due to over-current. The electrical and thermal limits defined in the *Absolute Maximum Ratings* must be followed at all times.

The SN74HC86-Q1 can drive a load with a total capacitance less than or equal to 50 pF connected to a high-impedance CMOS input while still meeting all of the datasheet specifications. Larger capacitive loads can be applied, however it is not recommended to exceed 70 pF. If larger capacitive loads are required, it is recommended to add a series resistor between the output and the capacitor to limit output current to the values given in the *Absolute Maximum Ratings*.

### 8.3.2 Standard CMOS Inputs

Standard CMOS inputs are high impedance and are typically modeled as a resistor from the input to ground in parallel with the input capacitance given in the *Electrical Characteristics*. The worst case resistance is calculated with the maximum input voltage, given in the *Absolute Maximum Ratings*, and the maximum input leakage current, given in the *Electrical Characteristics*, using ohm's law (R = V ÷ I).

Signals applied to the inputs need to have fast edge rates, as defined by Δt/Δv in the *Recommended Operating Conditions* to avoid excessive current consumption and oscillations. If a slow or noisy input signal is required, a device with a Schmitt-trigger input should be used to condition the input signal prior to the standard CMOS input.

Copyright © 2004–2020, Texas Instruments Incorporated

## Feature Description (continued)

### 8.3.3 Clamp Diode Structure

The inputs and outputs to this device have both positive and negative clamping diodes as depicted in 図 6.

> **注意**
>
> Voltages beyond the values specified in the Absolute Maximum Ratings table can cause damage to the device. The recommended input and output voltage ratings may be exceeded if the input and output clamp-current ratings are observed.

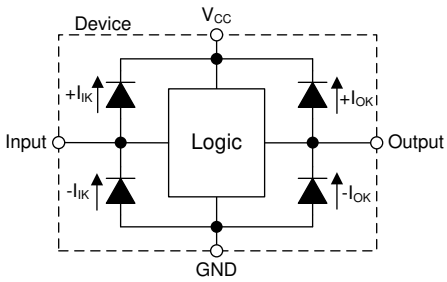


**図 6. Electrical Placement of Clamping Diodes for Each Input and Output**

## 8.4 Device Functional Modes

**表 1. Function Table**

| INPUTS | | OUTPUT |
|---|---|---|
| A | B | Y |
| L | L | L |
| L | H | H |
| H | L | H |
| H | H | L |


Copyright © 2004–2020, Texas Instruments Incorporated

# 9 Application and Implementation

**注**

Information in the following applications sections is not part of the TI component specification, and TI does not warrant its accuracy or completeness. TI's customers are responsible for determining suitability of components for their purposes. Customers should validate and test their design implementation to confirm system functionality.

## 9.1 Application Information

In this application, a 2-input XOR gate is used as a phase difference detector as shown in *図 7*. The remaining three gates can be used for other applications in the system, or the inputs can be grounded and the channels left unused.

The SN74HC86-Q1 is used to identify phase difference between a reference clock and another input clock. Whenever the clock states are different, the XOR output will pulse HIGH until the clocks return to the same state. The output is fed into a low-pass filter to obtain a DC representation of the phase difference.

## 9.2 Typical Application

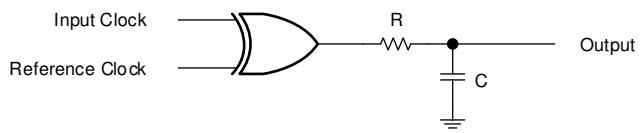


**図 7. Typical application block diagram**

### 9.2.1 Design Requirements

#### *9.2.1.1 Power Considerations*

Ensure the desired supply voltage is within the range specified in the *Recommended Operating Conditions*. The supply voltage sets the device's electrical characteristics as described in the *Electrical Characteristics*.

The supply must be capable of sourcing current equal to the total current to be sourced by all outputs of the SN74HC86-Q1 plus the maximum supply current, $I_{CC}$, listed in the *Electrical Characteristics*. The logic device can only source or sink as much current as it is provided at the supply and ground pins, respectively. Be sure not to exceed the maximum total current through GND or $V_{CC}$ listed in the *Absolute Maximum Ratings*.

Total power consumption can be calculated using the information provided in CMOS Power Consumption and $C_{pd}$ Calculation.

Thermal increase can be calculated using the information provided in Thermal Characteristics of Standard Linear and Logic (SLL) Packages and Devices.

**注意**

The maximum junction temperature, $T_J$(max) listed in the *Absolute Maximum Ratings*, is an *additional limitation* to prevent damage to the device. Do not violate any values listed in the *Absolute Maximum Ratings*. These limits are provided to prevent damage to the device.

#### *9.2.1.2 Input Considerations*

Unused inputs must be terminated to either $V_{CC}$ or ground. These can be directly terminated if the input is completely unused, or they can be connected with a pull-up or pull-down resistor if the input is to be used sometimes, but not always. A pull-up resistor is used for a default state of HIGH, and a pull-down resistor is used for a default state of LOW. The resistor size is limited by drive current of the controller, leakage current into the SN74HC86-Q1, as specified in the *Electrical Characteristics*, and the desired input transition rate. A 10-kΩ resistor value is often used due to these factors.

Copyright © 2004–2020, Texas Instruments Incorporated

## Typical Application (continued)

The SN74HC86-Q1 has standard CMOS inputs, so input signal edge rates cannot be slow. Slow input edge rates can cause oscillations and damaging shoot-through current. The recommended rates are defined in the *Recommended Operating Conditions*.

Refer to the *Feature Description* for additional information regarding the inputs for this device.

#### *9.2.1.3 Output Considerations*

The positive supply voltage is used to produce the output HIGH voltage. Drawing current from the output will decrease the output voltage as specified by the $V_{OH}$ specification in the *Electrical Characteristics*. Similarly, the ground voltage is used to produce the output LOW voltage. Sinking current into the output will increase the output voltage as specified by the $V_{OL}$ specification in the *Electrical Characteristics*.

Unused outputs can be left floating. Do not connect outputs directly to $V_{CC}$ or ground.

Refer to *Feature Description* for additional information regarding the outputs for this device.

### 9.2.2 Detailed Design Procedure

1. Add a decoupling capacitor from $V_{CC}$ to GND. The capacitor needs to be placed physically close to the device and electrically close to both the $V_{CC}$ and GND pins. An example layout is shown in the *Layout*.
2. Ensure the capacitive load at the output is ≤ 70 pF. This is not a hard limit, however it will ensure optimal performance. This can be accomplished by providing short, appropriately sized traces from the SN74HC86-Q1 to the receiving device.
3. Ensure the resistive load at the output is larger than ($V_{CC}$ / $I_O$(max)) Ω. This will ensure that the maximum output current from the *Absolute Maximum Ratings* is not violated. Most CMOS inputs have a resistive load measured in megaohms; much larger than the minimum calculated above.
4. Thermal issues are rarely a concern for logic gates, however the power consumption and thermal increase can be calculated using the steps provided in the application report, CMOS Power Consumption and Cpd Calculation

### 9.2.3 Application Curves

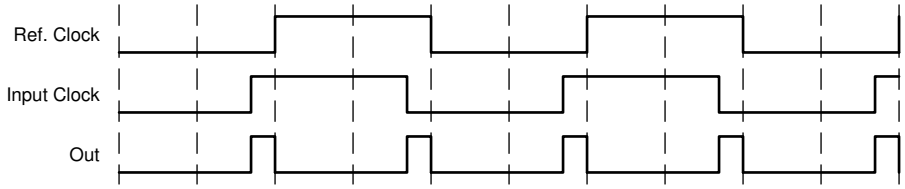


**図 8. Application timing diagram**


Copyright © 2004–2020, Texas Instruments Incorporated

## 10 Power Supply Recommendations

The power supply can be any voltage between the minimum and maximum supply voltage rating located in the *Recommended Operating Conditions*. Each $V_{CC}$ terminal should have a bypass capacitor to prevent power disturbance. A 0.1-µF capacitor is recommended for this device. It is acceptable to parallel multiple bypass caps to reject different frequencies of noise. The 0.1-µF and 1-µF capacitors are commonly used in parallel. The bypass capacitor should be installed as close to the power terminal as possible for best results, as shown in *図 9*.

## 11 Layout

### 11.1 Layout Guidelines

When using multiple-input and multiple-channel logic devices inputs must not ever be left floating. In many cases, functions or parts of functions of digital logic devices are unused; for example, when only two inputs of a triple-input AND gate are used. Such unused input pins must not be left unconnected because the undefined voltages at the outside connections result in undefined operational states. All unused inputs of digital logic devices must be connected to a logic high or logic low voltage, as defined by the input voltage specifications, to prevent them from floating. The logic level that must be applied to any particular unused input depends on the function of the device. Generally, the inputs are tied to GND or $V_{CC}$, whichever makes more sense for the logic function or is more convenient.

### 11.2 Layout Example

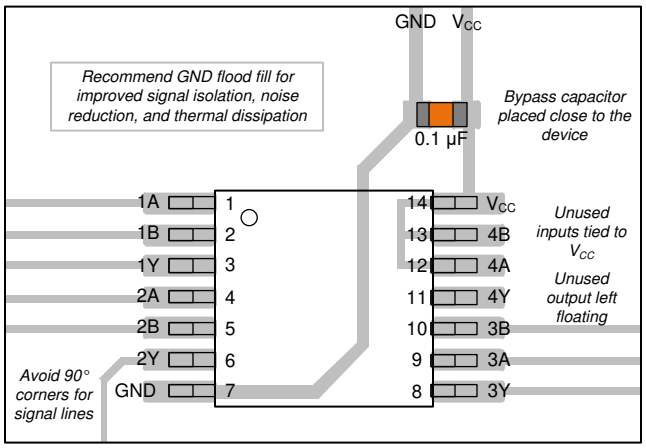


**図 9. Example layout for the SN74HC86-Q1**

# 12 デバイスおよびドキュメントのサポート

## 12.1 ドキュメントのサポート

### 12.1.1 関連資料

関連資料については、以下を参照してください。

- 『HCMOS Design Considerations』(英語)
- 『CMOS Power Consumption and Cpd Calculation』(英語)
- 『Designing With Logic』(英語)

## 12.2 関連リンク

次の表に、クイック・アクセス・リンクを示します。カテゴリには、技術資料、サポートおよびコミュニティ・リソース、ツールとソフトウェア、およびサンプル注文またはご購入へのクイック・アクセスが含まれます。

## 12.3 コミュニティ・リソース

TI E2E™ support forums are an engineer's go-to source for fast, verified answers and design help — straight from the experts. Search existing answers or ask your own question to get the quick design help you need.

Linked content is provided "AS IS" by the respective contributors. They do not constitute TI specifications and do not necessarily reflect TI's views; see TI's Terms of Use.

## 12.4 商標

E2E is a trademark of Texas Instruments.
All other trademarks are the property of their respective owners.

## 12.5 静電気放電に関する注意事項

これらのデバイスは、限定的なESD（静電破壊）保護機能を内 蔵しています。保存時または取り扱い時は、MOSゲートに対す る静電破壊を防止するために、リード線同士をショートさせて おくか、デバイスを導電フォームに入れる必要があります。

## 12.6 Glossary

SLYZ022 — *TI Glossary*.

This glossary lists and explains terms, acronyms, and definitions.

# 13 メカニカル、パッケージ、および注文情報

以降のページには、メカニカル、パッケージ、および注文に関する情報が記載されています。この情報は、そのデバイスについて利用可能な最新のデータです。このデータは予告なく変更されることがあり、ドキュメントが改訂される場合もあります。本データシートのブラウザ版を使用されている場合は、画面左側の説明をご覧ください。


Copyright © 2004–2020, Texas Instruments Incorporated

## PACKAGING INFORMATION

| Orderable part number | Status (1) | Material type (2) | Package \| Pins | Package qty \| Carrier | RoHS (3) | Lead finish/ Ball material (4) | MSL rating/ Peak reflow (5) | Op temp (°C) | Part marking (6) |
|---|---|---|---|---|---|---|---|---|---|
| SN74HC86IDRG4Q1 | Active | Production | SOIC (D) \| 14 | 2500 \| LARGE T&R | Yes | NIPDAU | Level-1-260C-UNLIM | -40 to 85 | HC86I |
| SN74HC86IDRG4Q1.A | Active | Production | SOIC (D) \| 14 | 2500 \| LARGE T&R | Yes | NIPDAU | Level-1-260C-UNLIM | -40 to 85 | HC86I |
| SN74HC86IPWRG4Q1 | Active | Production | TSSOP (PW) \| 14 | 2000 \| LARGE T&R | Yes | NIPDAU | Level-1-260C-UNLIM | -40 to 85 | HC86I |
| SN74HC86IPWRG4Q1.A | Active | Production | TSSOP (PW) \| 14 | 2000 \| LARGE T&R | Yes | NIPDAU | Level-1-260C-UNLIM | -40 to 85 | HC86I |
| SN74HC86QDRG4Q1 | Active | Production | SOIC (D) \| 14 | 2500 \| LARGE T&R | Yes | NIPDAU | Level-1-260C-UNLIM | -40 to 125 | HC86Q |
| SN74HC86QDRG4Q1.A | Active | Production | SOIC (D) \| 14 | 2500 \| LARGE T&R | Yes | NIPDAU | Level-1-260C-UNLIM | -40 to 125 | HC86Q |
| SN74HC86QPWRG4Q1 | Active | Production | TSSOP (PW) \| 14 | 2000 \| LARGE T&R | Yes | NIPDAU | Level-1-260C-UNLIM | -40 to 125 | HC86Q |
| SN74HC86QPWRG4Q1.A | Active | Production | TSSOP (PW) \| 14 | 2000 \| LARGE T&R | Yes | NIPDAU | Level-1-260C-UNLIM | -40 to 125 | HC86Q |
| SN74HC86QPWRQ1 | Active | Production | TSSOP (PW) \| 14 | 2000 \| LARGE T&R | Yes | NIPDAU \| SN | Level-1-260C-UNLIM | -40 to 125 | HC86Q |
| SN74HC86QPWRQ1.A | Active | Production | TSSOP (PW) \| 14 | 2000 \| LARGE T&R | Yes | NIPDAU | Level-1-260C-UNLIM | -40 to 125 | HC86Q |

(1) **Status:** For more details on status, see our product life cycle.

(2) **Material type:** When designated, preproduction parts are prototypes/experimental devices, and are not yet approved or released for full production. Testing and final process, including without limitation quality assurance, reliability performance testing, and/or process qualification, may not yet be complete, and this item is subject to further changes or possible discontinuation. If available for ordering, purchases will be subject to an additional waiver at checkout, and are intended for early internal evaluation purposes only. These items are sold without warranties of any kind.

(3) **RoHS values:** Yes, No, RoHS Exempt. See the TI RoHS Statement for additional information and value definition.

(4) **Lead finish/Ball material:** Parts may have multiple material finish options. Finish options are separated by a vertical ruled line. Lead finish/Ball material values may wrap to two lines if the finish value exceeds the maximum column width.

(5) **MSL rating/Peak reflow:** The moisture sensitivity level ratings and peak solder (reflow) temperatures. In the event that a part has multiple moisture sensitivity ratings, only the lowest level per JEDEC standards is shown. Refer to the shipping label for the actual reflow temperature that will be used to mount the part to the printed circuit board.

(6) **Part marking:** There may be an additional marking, which relates to the logo, the lot trace code information, or the environmental category of the part.

Multiple part markings will be inside parentheses. Only one part marking contained in parentheses and separated by a "~" will appear on a part. If a line is indented then it is a continuation of the previous line and the two combined represent the entire part marking for that device.

**Important Information and Disclaimer:**The information provided on this page represents TI's knowledge and belief as of the date that it is provided. TI bases its knowledge and belief on information provided by third parties, and makes no representation or warranty as to the accuracy of such information. Efforts are underway to better integrate information from third parties. TI has taken and continues to take reasonable steps to provide representative

and accurate information but may not have conducted destructive testing or chemical analysis on incoming materials and chemicals. TI and TI suppliers consider certain information to be proprietary, and thus CAS numbers and other limited information may not be available for release.

In no event shall TI's liability arising out of such information exceed the total purchase price of the TI part(s) at issue in this document sold by TI to Customer on an annual basis.

**OTHER QUALIFIED VERSIONS OF SN74HC86-Q1 :**

- Catalog : SN74HC86
- Military : SN54HC86

NOTE: Qualified Version Definitions:

- Catalog - TI's standard catalog product
- Military - QML certified for Military and Defense Applications

## TAPE AND REEL INFORMATION

**REEL DIMENSIONS**

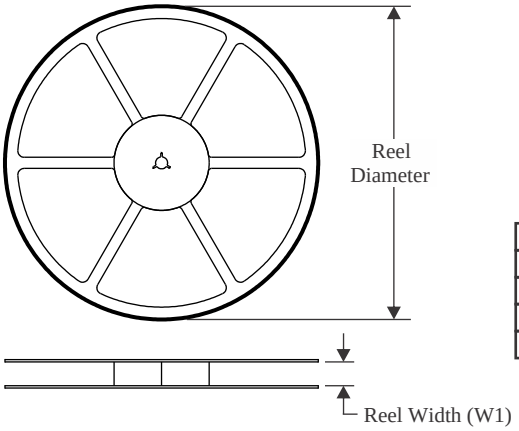


**TAPE DIMENSIONS**

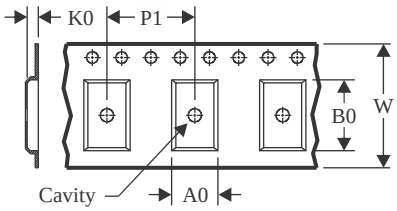


| | |
|---|---|
| A0 | Dimension designed to accommodate the component width |
| B0 | Dimension designed to accommodate the component length |
| K0 | Dimension designed to accommodate the component thickness |
| W | Overall width of the carrier tape |
| P1 | Pitch between successive cavity centers |

**QUADRANT ASSIGNMENTS FOR PIN 1 ORIENTATION IN TAPE**

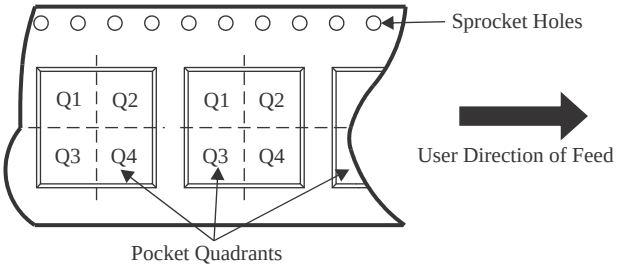


*All dimensions are nominal

| Device | Package Type | Package Drawing | Pins | SPQ | Reel Diameter (mm) | Reel Width W1 (mm) | A0 (mm) | B0 (mm) | K0 (mm) | P1 (mm) | W (mm) | Pin1 Quadrant |
|---|---|---|---|---|---|---|---|---|---|---|---|---|
| SN74HC86IDRG4Q1 | SOIC | D | 14 | 2500 | 330.0 | 16.4 | 6.5 | 9.0 | 2.1 | 8.0 | 16.0 | Q1 |
| SN74HC86IPWRG4Q1 | TSSOP | PW | 14 | 2000 | 330.0 | 12.4 | 6.9 | 5.6 | 1.6 | 8.0 | 12.0 | Q1 |
| SN74HC86QDRG4Q1 | SOIC | D | 14 | 2500 | 330.0 | 16.4 | 6.5 | 9.0 | 2.1 | 8.0 | 16.0 | Q1 |
| SN74HC86QPWRG4Q1 | TSSOP | PW | 14 | 2000 | 330.0 | 12.4 | 6.9 | 5.6 | 1.6 | 8.0 | 12.0 | Q1 |
| SN74HC86QPWRQ1 | TSSOP | PW | 14 | 2000 | 330.0 | 12.4 | 6.9 | 5.6 | 1.6 | 8.0 | 12.0 | Q1 |
| SN74HC86QPWRQ1 | TSSOP | PW | 14 | 2000 | 330.0 | 12.4 | 6.9 | 5.6 | 1.6 | 8.0 | 12.0 | Q1 |

TAPE AND REEL BOX DIMENSIONS

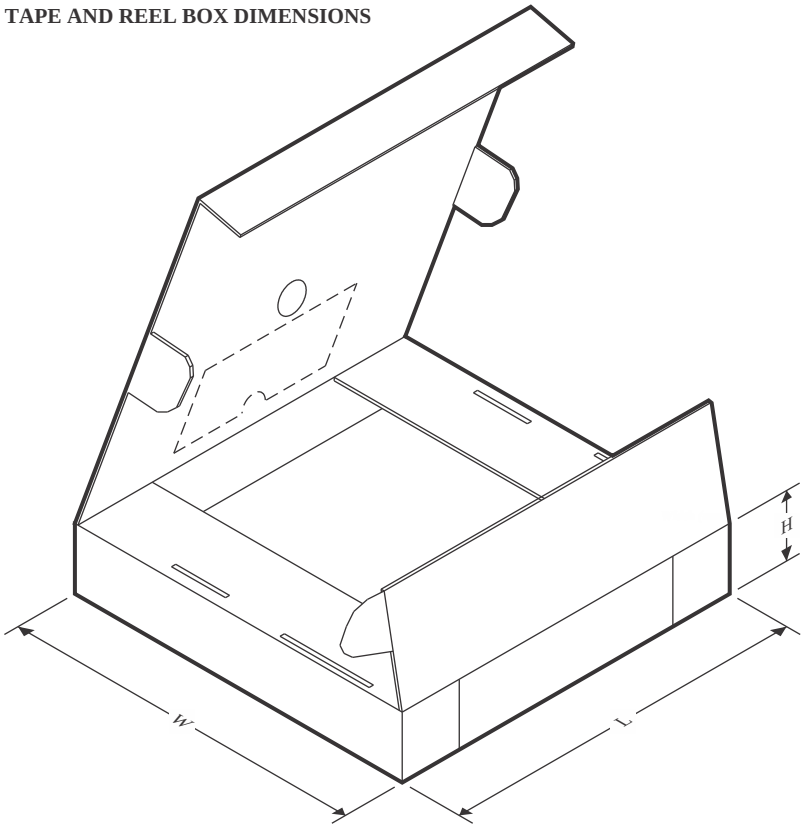


*All dimensions are nominal

| Device | Package Type | Package Drawing | Pins | SPQ | Length (mm) | Width (mm) | Height (mm) |
|---|---|---|---|---|---|---|---|
| SN74HC86IDRG4Q1 | SOIC | D | 14 | 2500 | 353.0 | 353.0 | 32.0 |
| SN74HC86IPWRG4Q1 | TSSOP | PW | 14 | 2000 | 353.0 | 353.0 | 32.0 |
| SN74HC86QDRG4Q1 | SOIC | D | 14 | 2500 | 353.0 | 353.0 | 32.0 |
| SN74HC86QPWRG4Q1 | TSSOP | PW | 14 | 2000 | 353.0 | 353.0 | 32.0 |
| SN74HC86QPWRQ1 | TSSOP | PW | 14 | 2000 | 356.0 | 356.0 | 35.0 |
| SN74HC86QPWRQ1 | TSSOP | PW | 14 | 2000 | 353.0 | 353.0 | 32.0 |

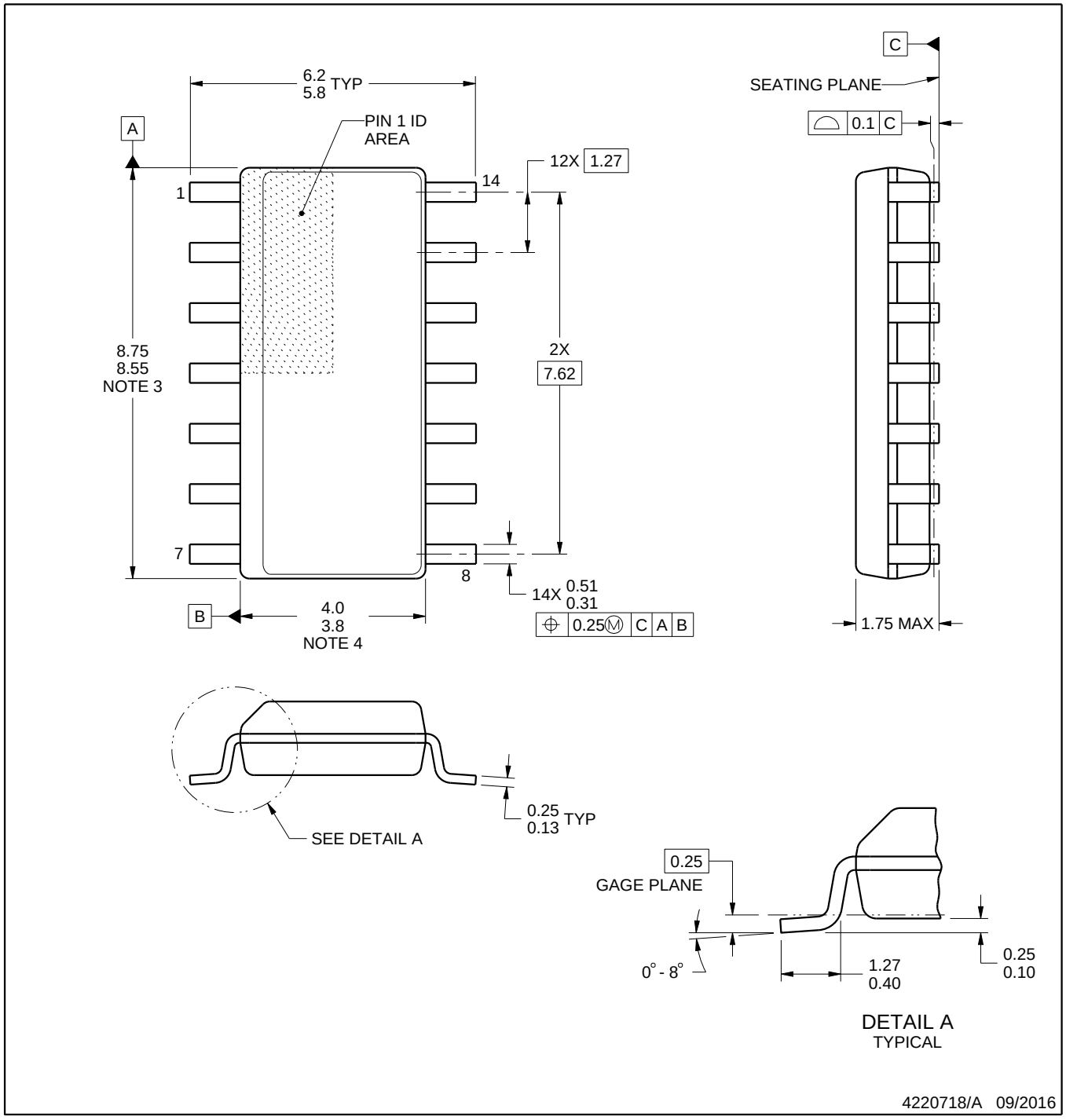


NOTES:

1. All linear dimensions are in millimeters. Dimensions in parenthesis are for reference only. Dimensioning and tolerancing per ASME Y14.5M.
2. This drawing is subject to change without notice.
3. This dimension does not include mold flash, protrusions, or gate burrs. Mold flash, protrusions, or gate burrs shall not exceed 0.15 mm, per side.
4. This dimension does not include interlead flash. Interlead flash shall not exceed 0.43 mm, per side.
5. Reference JEDEC registration MS-012, variation AB.

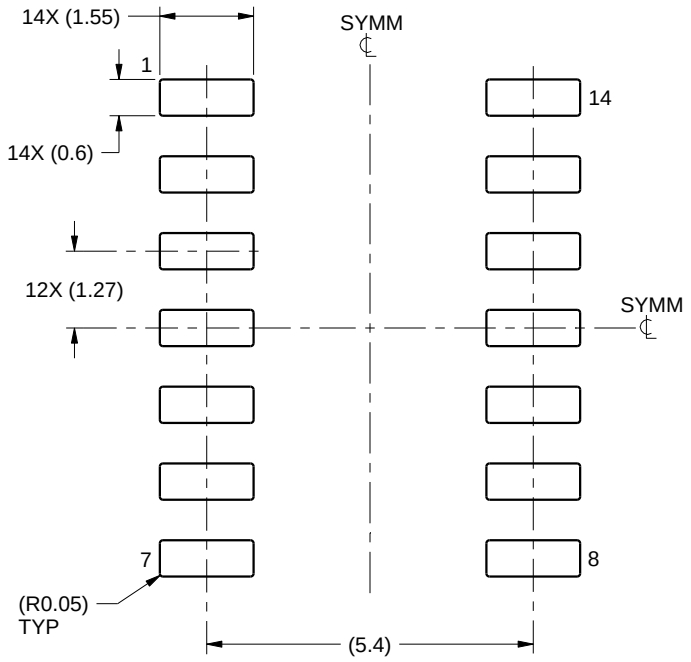


LAND PATTERN EXAMPLE
SCALE:8X

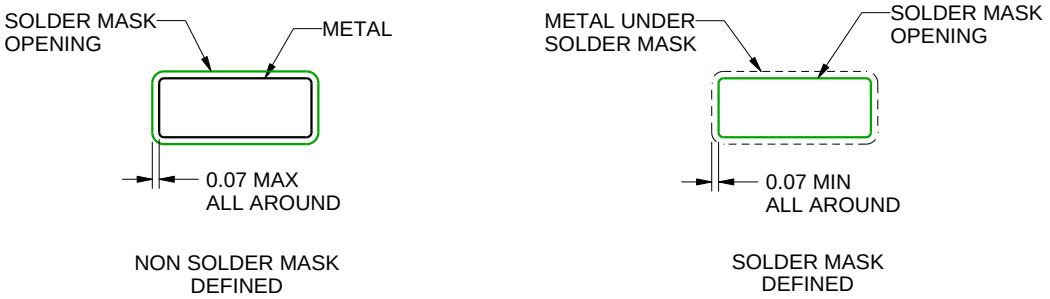


SOLDER MASK DETAILS

4220718/A 09/2016

NOTES: (continued)

6. Publication IPC-7351 may have alternate designs.
7. Solder mask tolerances between and around signal pads can vary based on board fabrication site.

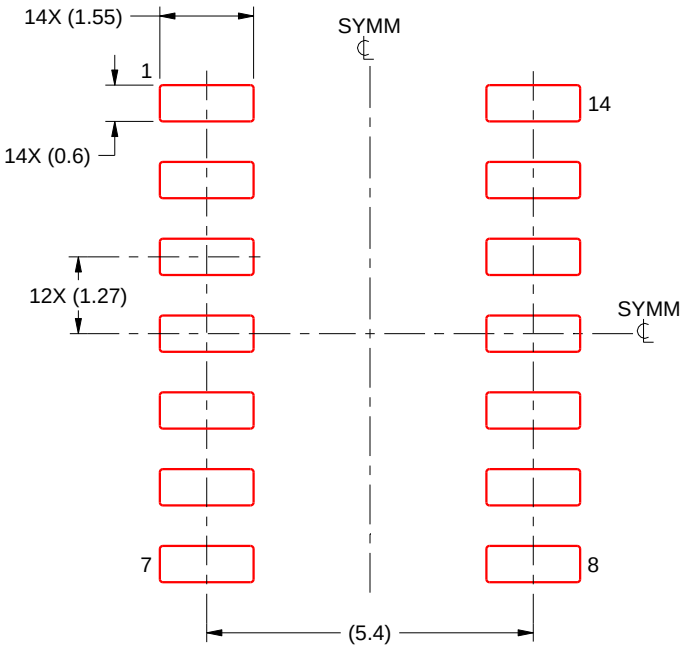


SOLDER PASTE EXAMPLE
BASED ON 0.125 mm THICK STENCIL
SCALE:8X

4220718/A 09/2016

NOTES: (continued)

8. Laser cutting apertures with trapezoidal walls and rounded corners may offer better paste release. IPC-7525 may have alternate design recommendations.
9. Board assembly site may have different recommendations for stencil design.

# PW0014A

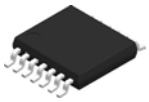

# PACKAGE OUTLINE

## TSSOP - 1.2 mm max height

SMALL OUTLINE PACKAGE

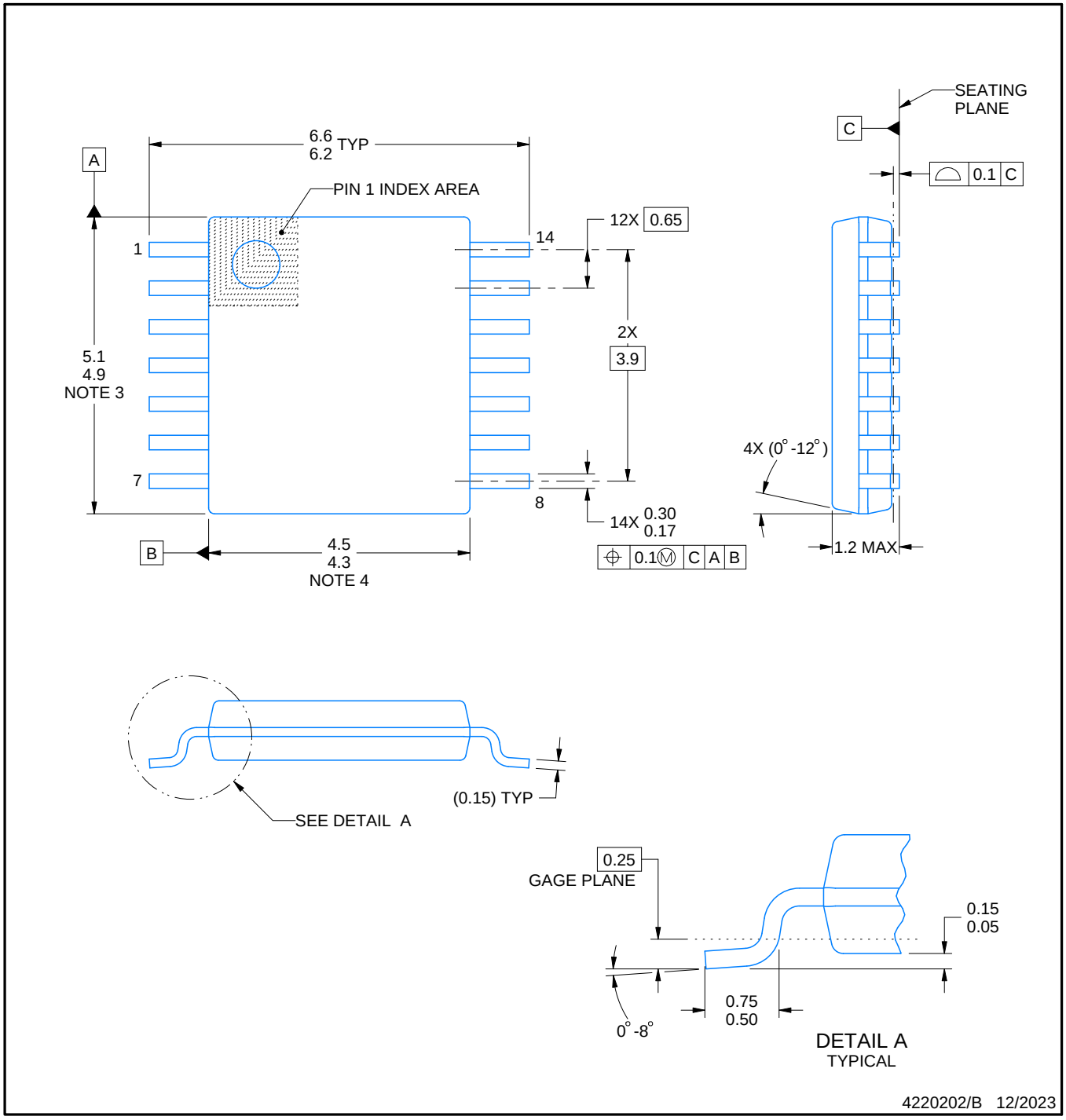


NOTES:

1. All linear dimensions are in millimeters. Any dimensions in parenthesis are for reference only. Dimensioning and tolerancing per ASME Y14.5M.
2. This drawing is subject to change without notice.
3. This dimension does not include mold flash, protrusions, or gate burrs. Mold flash, protrusions, or gate burrs shall not exceed 0.15 mm per side.
4. This dimension does not include interlead flash. Interlead flash shall not exceed 0.25 mm per side.
5. Reference JEDEC registration MO-153.

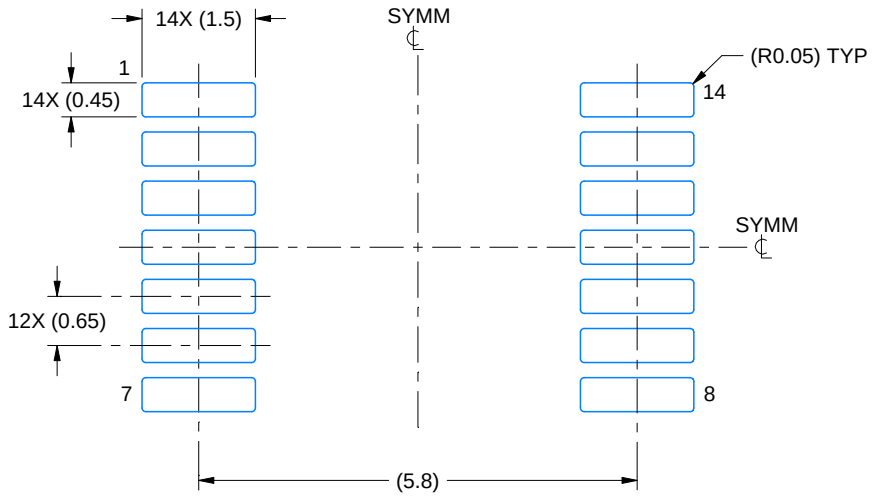


LAND PATTERN EXAMPLE
EXPOSED METAL SHOWN
SCALE: 10X

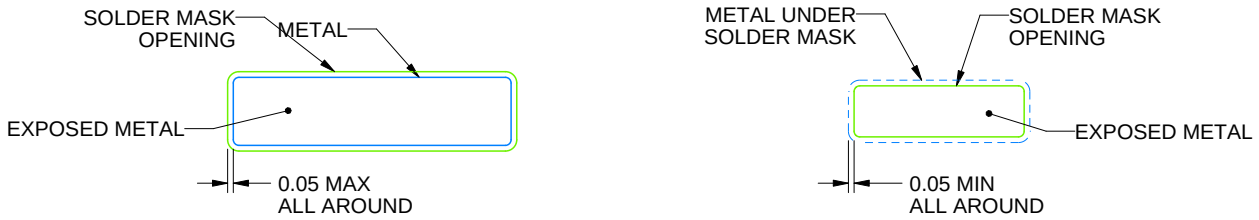


NON-SOLDER MASK DEFINED (PREFERRED)

SOLDER MASK DEFINED

SOLDER MASK DETAILS

4220202/B 12/2023

NOTES: (continued)

6. Publication IPC-7351 may have alternate designs.
7. Solder mask tolerances between and around signal pads can vary based on board fabrication site.

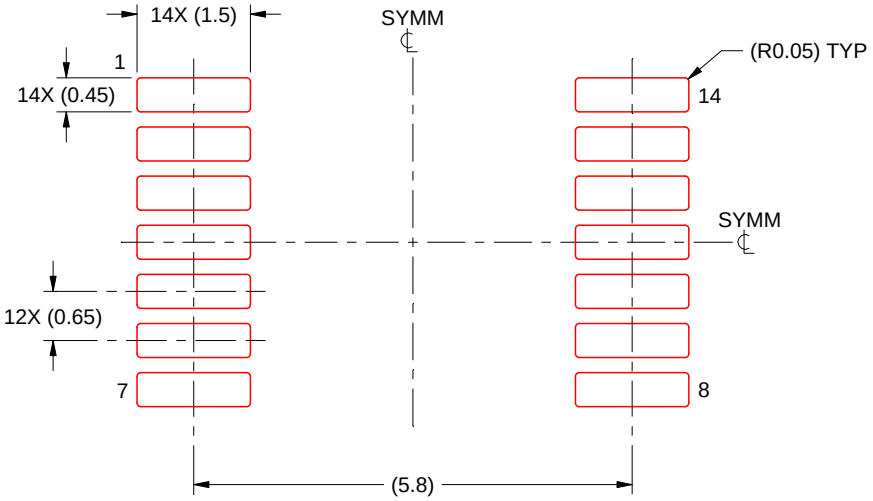


SOLDER PASTE EXAMPLE
BASED ON 0.125 mm THICK STENCIL
SCALE: 10X

4220202/B 12/2023

NOTES: (continued)

8. Laser cutting apertures with trapezoidal walls and rounded corners may offer better paste release. IPC-7525 may have alternate design recommendations.
9. Board assembly site may have different recommendations for stencil design.

# 重要なお知らせと免責事項

TI は、技術データと信頼性データ (データシートを含みます)、設計リソース (リファレンス デザインを含みます)、アプリケーションや設計に関する各種アドバイス、Web ツール、安全性情報、その他のリソースを、欠陥が存在する可能性のある「現状のまま」提供しており、商品性および特定目的に対する適合性の黙示保証、第三者の知的財産権の非侵害保証を含むいかなる保証も、明示的または黙示的にかかわらず拒否します。

これらのリソースは、TI 製品を使用する設計の経験を積んだ開発者への提供を意図したものです。(1) お客様のアプリケーションに適した TI 製品の選定、(2) お客様のアプリケーションの設計、検証、試験、(3) お客様のアプリケーションに該当する各種規格や、その他のあらゆる安全性、セキュリティ、規制、または他の要件への確実な適合に関する責任を、お客様のみが単独で負うものとします。

上記の各種リソースは、予告なく変更される可能性があります。これらのリソースは、リソースで説明されている TI 製品を使用するアプリケーションの開発の目的でのみ、TI はその使用をお客様に許諾します。これらのリソースに関して、他の目的で複製することや掲載することは禁止されています。TI や第三者の知的財産権のライセンスが付与されている訳ではありません。お客様は、これらのリソースを自身で使用した結果発生するあらゆる申し立て、損害、費用、損失、責任について、TI およびその代理人を完全に補償するものとし、TI は一切の責任を拒否します。

TI の製品は、 TI の販売条件 、 TI の総合的な品質ガイドライン 、 ti.com または TI 製品などに関連して提供される他の適用条件に従い提供されます。TI がこれらのリソースを提供することは、適用される TI の保証または他の保証の放棄の拡大や変更を意味するものではありません。 TI がカスタム、またはカスタマー仕様として明示的に指定していない限り、TI の製品は標準的なカタログに掲載される汎用機器です。

お客様がいかなる追加条項または代替条項を提案する場合も、TI はそれらに異議を唱え、拒否します。

Copyright © 2026, Texas Instruments Incorporated

最終更新日：2025 年 10 月