SN74HCS595-Q1 車載用、シュミット・トリガ入力および 3 ステート出力レジスタ付き、8 ビット・シフト・レジスタ

1 特長

- 車載アプリケーション用に AEC-Q100 認定済み:
  - デバイス温度グレード 1: -40℃～+125℃、T_A
  - デバイス HBM ESD 分類レベル 2
  - デバイス CDM ESD 分類レベル C6
- ウェッタブル・フランク QFN (WBQB) パッケージで供給
- 広い動作電圧範囲:2V～6V
- シュミット・トリガ入力により低速の入力信号またはノイズの多い入力信号に対応
- 低い消費電力
  - I_{CC}:100nA (標準値)
  - 入力リーク電流:±100nA (標準値)
- 6V で±7.8mA の出力駆動能力

2 アプリケーション

- 出力拡張
- LED マトリクス制御
- 7 セグメント・ディスプレイ制御
- 8 ビット・データ・ストレージ

3 概要

SN74HCS595-Q1 デバイスには 8 ビットのシリアル・イン、パラレル・アウトのシフト・レジスタが搭載されており、8 ビットの D タイプ・ストレージ・レジスタへデータを供給します。すべての入力はシュミット・トリガを備えているため、低速エッジまたはノイズの多い入力信号による誤ったデータ出力を解消できます。ストレージ・レジスタはパラレルの 3 ステート出力を備えています。シフト・レジスタとストレージ・レジスタの両方に、それぞれ独立したクロックが供給されます。シフト・レジスタはダイレクト・オーバーライディング・クリア ($\overline{SRCLR}$) 入力、シリアル (SER) 入力、カスケード用シリアル出力 ($Q_{H'}$) を備えています。出力イネーブル ($\overline{OE}$) 入力が HIGH のとき、ストレージ・レジスタ出力は高インピーダンス状態になります。内部レジスタ・データおよびシリアル出力 ($Q_{H'}$) は、$\overline{OE}$ 入力の動作による影響を受けません。

製品情報(1)

部品番号	パッケージ	本体サイズ (公称)
SN74HCS595PW-Q1	TSSOP (16)	5.00mm × 4.40mm
SN74HCS595D-Q1	SOIC (16)	9.90mm × 3.90mm
SN74HCS595BQB-Q1	WQFN (16)	3.60mm × 2.60mm
SN74HCS595DYY-Q1	SOT-23-THN (16)	4.20mm × 2.00mm
SN74HCS595WBQB-Q1	WQFN (16)	3.60mm × 2.60mm

(1) 利用可能なすべてのパッケージについては、このデータシートの末尾にある注文情報を参照してください。

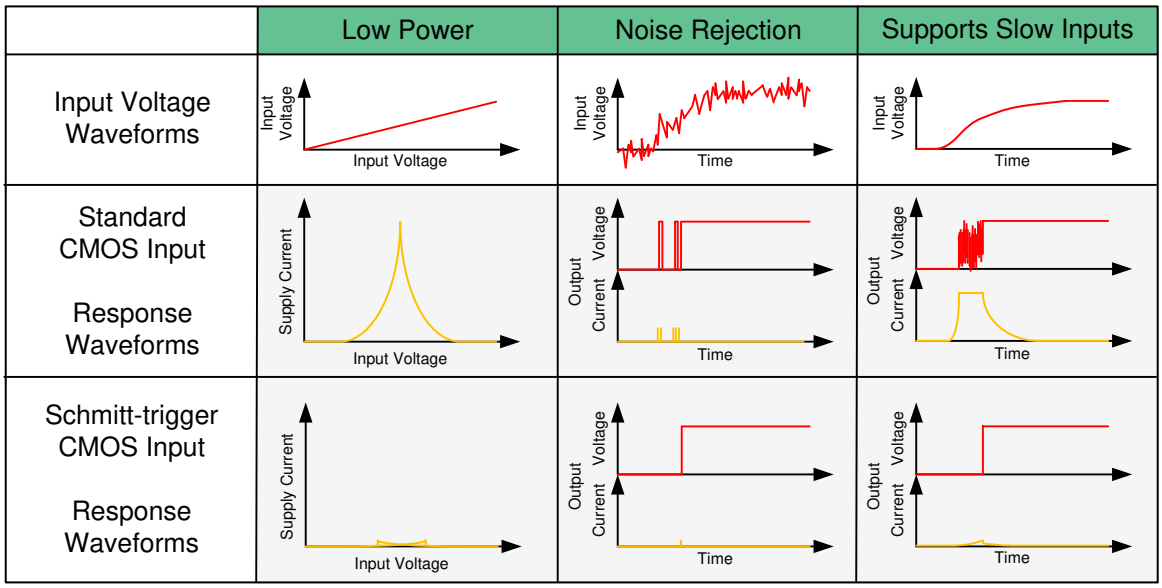

シュミットトリガ入力の利点

英語版の TI 製品についての情報を翻訳したこの資料は、製品の概要を確認する目的で便宜的に提供しているものです。該当する正式な英語版の最新情報は、www.ti.com で閲覧でき、その内容が常に優先されます。TI では翻訳の正確性および妥当性につきましては一切保証いたしません。実際の設計などの前には、必ず最新版の英語版をご参照くださいますようお願いいたします。

Table of Contents

1 特長 1
2 アプリケーション 1
3 概要 1
4 Revision History 2
5 Pin Configuration and Functions 3
6 Specifications 4
6.1 Absolute Maximum Ratings 4
6.2 ESD Ratings 4
6.3 Recommended Operating Conditions 4
6.4 Thermal Information 5
6.5 Electrical Characteristics 5
6.6 Timing Characteristics 6
6.7 Switching Characteristics 6
6.8 Operating Characteristics 7
6.9 Typical Characteristics 9
7 Parameter Measurement Information 10
8 Detailed Description 11
8.1 Functional Block Diagram 11
8.2 Feature Description 11
8.3 Device Functional Modes 13
9 Application and Implementation 14
9.1 Application Information 14
9.2 Typical Application 14
10 Power Supply Recommendations 17
11 Layout 18
11.1 Layout Guidelines 18
11.2 Layout Example 18
12 Device and Documentation Support 19
12.1 Documentation Support 19
12.2 Receiving Notification of Documentation Updates 19
12.3 サポート・リソース 19
12.4 Trademarks 19
12.5 Electrostatic Discharge Caution 19
12.6 Glossary 19
13 Mechanical, Packaging, and Orderable Information 19

4 Revision History

資料番号末尾の英字は改訂を表しています。その改訂履歴は英語版に準じています。

Changes from Revision E (September 2021) to Revision F (December 2021) — **Page**

- WBQB パッケージのステータスを*製品プレビュー*から*量産*に変更 1

Changes from Revision D (June 2021) to Revision E (September 2021) — **Page**

- 特長に WBQB パッケージを追加 1
- 製品情報表に WBQB の型番を追加 1
- Added WBQB package to WQFN pinout diagram and to pin functions table 3
- Added WBQB package to *Thermal Information table* 5

Changes from Revision C (March 2021) to Revision D (June 2021) — **Page**

- DYY パッケージを*製品プレビュー*から*量産データ*へ変更 1

Changes from Revision B (August 2020) to Revision C (March 2021) — **Page**

- 「*製品情報*」表に DYY パッケージを追加 1
- Added DYY Package pinout diagram and information to *Pin Configuration and Functions* 3
- Added DYY Package to *Thermal Information* table 5

Changes from Revision A (February 2020) to Revision B (August 2020) — **Page**

- 文書全体にわたって表、図、相互参照の採番方法を更新 1
- 注文可能な表に BQB パッケージを追加 1
- Added BQB Package to *Thermal Information* table 5

Changes from Revision * (December 2019) to Revision A (February 2020) — **Page**

- 事前情報から量産データに変更 1
- D パッケージを注文可能な表に追加 1
- Added D Package to *Thermal Information* table 5

Copyright © 2022 Texas Instruments Incorporated

5 Pin Configuration and Functions

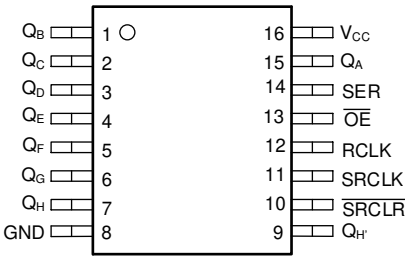

図 5-1. D, PW, or DYY Package 16-Pin SOIC, TSSOP, or SOT Top View

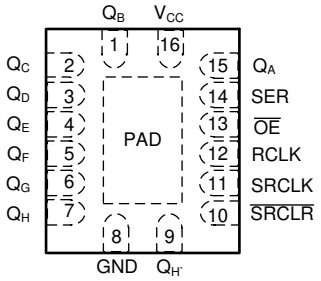

図 5-2. WBQB (Preview) or BQB Package 16-Pin WQFN Transparent Top View

表 5-1. Pin Functions

PIN		TYPE	DESCRIPTION
NAME	NO.		
Q_B	1	Output	Q_B output
Q_C	2	Output	Q_C output
Q_D	3	Output	Q_D output
Q_E	4	Output	Q_E output
Q_F	5	Output	Q_F output
Q_G	6	Output	Q_G output
Q_H	7	Output	Q_H output
GND	8	—	Ground
$Q_{H'}$	9	Output	Serial output, can be used for cascading
$\overline{SRCLR}$	10	Input	Shift register clear, active low
SRCLK	11	Input	Shift register clock, rising edge triggered
RCLK	12	Input	Output register clock, rising edge triggered
$\overline{OE}$	13	Input	Output Enable, active low
SER	14	Input	Serial input
Q_A	15	Output	Q_A output
V_{CC}	16	—	Positive supply
Thermal Pad(1)		—	The thermal pad can be connect to GND or left floating. Do not connect to any other signal or supply.

(1) BQB and WBQB package only.

6 Specifications

6.1 Absolute Maximum Ratings

over operating free-air temperature range (unless otherwise noted)[1]

			MIN	MAX	UNIT
V_{CC}	Supply voltage		–0.5	7	V
I_{IK}	Input clamp current[2]	V_I < –0.5 V or V_I > V_{CC} + 0.5 V		±20	mA
I_{OK}	Output clamp current[2]	V_I < –0.5 V or V_I > V_{CC} + 0.5 V		±20	mA
I_O	Continuous output current	V_O = 0 to V_{CC}		±35	mA
	Continuous current through V_{CC} or GND			±70	mA
T_J	Junction temperature[3]			150	°C
T_{stg}	Storage temperature		–65	150	°C

(1) Operation outside the *Absolute Maximum Ratings* may cause permanent device damage. Absolute maximum ratings do not imply functional operation of the device at these or any other conditions beyond those listed under *Recommended Operating Conditions*. If briefly operating outside the *Recommended Operating Conditions* but within the *Absolute Maximum Ratings*, the device may not sustain damage, but it may not be fully functional. Operating the device in this manner may affect device reliability, functionality, performance, and shorten the device lifetime.
(2) The input and output voltage ratings may be exceeded if the input and output current ratings are observed.
(3) Assured by design.

6.2 ESD Ratings

			VALUE	UNIT
$V_{(ESD)}$	Electrostatic discharge	Human body model (HBM), per AEC Q100-002[1] HBM ESD Classification Level 2	±4000	V
		Charged device model (CDM), per AEC Q100-011 CDM ESD Classification Level C6	±1500	

(1) AEC Q100-002 indicate that HBM stressing shall be in accordance with the ANSI/ESDA/JEDEC JS-001 specification.

6.3 Recommended Operating Conditions

over operating free-air temperature range (unless otherwise noted)

		MIN	NOM	MAX	UNIT
V_{CC}	Supply voltage	2	5	6	V
V_I	Input voltage	0		V_{CC}	V
V_O	Output voltage	0		V_{CC}	V
T_A	Ambient temperature	–40		125	°C

Copyright © 2022 Texas Instruments Incorporated

6.4 Thermal Information

THERMAL METRIC[1]		SN74HCS595-Q1					UNIT
		PW (TSSOP)	D (SOIC)	BQB (WQFN)	DYY (SOT)	WBQB (WQFN)	
		16 PINS	16 PINS	16 PINS	16 PINS	16 PINS	
$R_{\theta JA}$	Junction-to-ambient thermal resistance	141.2	122.2	108.4	186.2	97.3	°C/W
$R_{\theta JC(top)}$	Junction-to-case (top) thermal resistance	78.8	80.9	77.3	109.1	93.8	°C/W
$R_{\theta JB}$	Junction-to-board thermal resistance	85.8	80.6	74.4	111.0	66.4	°C/W
Ψ_{JT}	Junction-to-top characterization parameter	27.7	40.4	12.6	18.0	14.6	°C/W
Ψ_{JB}	Junction-to-board characterization parameter	85.5	80.3	74.5	110.9	66.4	°C/W
$R_{\theta JC(bot)}$	Junction-to-case (bottom) thermal resistance	N/A	N/A	54.3	N/A	44.3	°C/W

(1) For more information about traditional and new thermal metrics, see the Semiconductor and IC Package Thermal Metrics application report.

6.5 Electrical Characteristics

over operating free-air temperature range; typical values measured at T_A = 25°C (unless otherwise noted).

PARAMETER		TEST CONDITIONS		V_{CC}	MIN	TYP	MAX	UNIT
V_{T+}	Positive switching threshold			2 V	0.7		1.5	V
				4.5 V	1.7		3.15	
				6 V	2.1		4.2	
V_{T-}	Negative switching threshold			2 V	0.3		1.0	V
				4.5 V	0.9		2.2	
				6 V	1.2		3.0	
ΔV_T	Hysteresis (V_{T+} - V_{T-})[1]			2 V	0.2		1.0	V
				4.5 V	0.4		1.4	
				6 V	0.6		1.6	
V_{OH}	High-level output voltage	$V_I = V_{IH}$ or V_{IL}	I_{OH} = -20 µA	2 V to 6 V	V_{CC} – 0.1	V_{CC} – 0.002		V
			I_{OH} = -6 mA	4.5 V	4.0	4.3		
			I_{OH} = -7.8 mA	6 V	5.4	5.75		
V_{OL}	Low-level output voltage	$V_I = V_{IH}$ or V_{IL}	I_{OL} = 20 µA	2 V to 6 V		0.002	0.1	V
			I_{OL} = 6 mA	4.5 V		0.18	0.30	
			I_{OL} = 7.8 mA	6 V		0.22	0.33	
I_I	Input leakage current	$V_I = V_{CC}$ or 0		6 V		±0.1	±1	µA
I_{OZ}	Off-state (high-impedance state) output current	$V_O = V_{CC}$ or 0		6 V		±0.5	±5	µA
I_{CC}	Supply current	$V_I = V_{CC}$ or 0, I_O = 0		6 V		0.1	2	µA
C_i	Input capacitance			2 V to 6 V			5	pF

(1) Assured by design.

6.6 Timing Characteristics

C_L = 50 pF; over operating free-air temperature range (unless otherwise noted). See *Parameter Measurement Information.*

PARAMETER			V_{CC}	Operating free-air temperature (T_A)				UNIT
				25°C		–40°C to 125°C		
				MIN	MAX	MIN	MAX	
t_w	Pulse duration	SRCLK or RCLK high or low	2 V	7		9		ns
			4.5 V	7		7		
			6 V	7		7		
		$\overline{SRCLR}$ low	2 V	8		10		
			4.5 V	7		7		
			6 V	7		7		
t_{su}	Setup time	SER before SRCLK ↑	2 V	8		13		ns
			4.5 V	4		5		
			6 V	3		4		
		SRCLK ↑ before RCLK ↑	2 V	11		18		
			4.5 V	5		7		
			6 V	4		6		
		$\overline{SRCLR}$ low before RCLK ↑	2 V	8		13		
			4.5 V	4		6		
			6 V	4		5		
		$\overline{SRCLR}$ high (inactive) before SRCLK ↑	2 V	8		13		
			4.5 V	4		6		
			6 V	4		5		
t_h	Hold time	SER after SRCLK ↑	2 V	0		0		ns
			4.5 V	0		0		
			6 V	0		0		

6.7 Switching Characteristics

C_L = 50 pF; over operating free-air temperature range (unless otherwise noted). See *Parameter Measurement Information.*

PARAMETER		FROM	TO	V_{CC}	Operating free-air temperature (T_A)						UNIT
					25°C			–40°C to 125°C			
					MIN	TYP	MAX	MIN	TYP	MAX	
f_{max}	Max switching frequency			2 V	35			19			MHz
				4.5 V	110			60			
				6 V	130			75			
t_{pd}	Propagation delay	SRCLK	$Q_{H'}$	2 V		14	19			28	ns
				4.5 V		6	8			10	
				6 V		5	7			9	
		RCLK	Q_A - Q_H	2 V		16	21			37	
				4.5 V		6	9			12	
				6 V		6	8			10	
t_{PHL}	Propagation delay	$\overline{SRCLR}$	$Q_{H'}$	2 V		13	19			27	ns
				4.5 V		6	8			11	
				6 V		6	8			10	
t_{en}	Enable time	$\overline{OE}$	Q_A - Q_H	2 V		12	18			27	ns
				4.5 V		6	9			13	
				6 V		5	8			11	

Copyright © 2022 Texas Instruments Incorporated

6.7 Switching Characteristics (continued)

C_L = 50 pF; over operating free-air temperature range (unless otherwise noted). See *Parameter Measurement Information.*

PARAMETER		FROM	TO	V_{CC}	Operating free-air temperature (T_A)						UNIT
					25°C			–40°C to 125°C			
					MIN	TYP	MAX	MIN	TYP	MAX	
t_{dis}	Disable time	$\overline{OE}$	Q_A - Q_H	2 V		13	16			20	ns
				4.5 V		9	11			13	
				6 V		8	10			12	
t_t	Transition-time		Any output	2 V			9			16	ns
				4.5 V			5			9	
				6 V			4			8	

6.8 Operating Characteristics

over operating free-air temperature range; typical values measured at T_A = 25°C (unless otherwise noted).

PARAMETER		TEST CONDITIONS	V_{CC}	MIN	TYP	MAX	UNIT
C_{pd}	Power dissipation capacitance per gate	No load	2 V to 6 V		40		pF

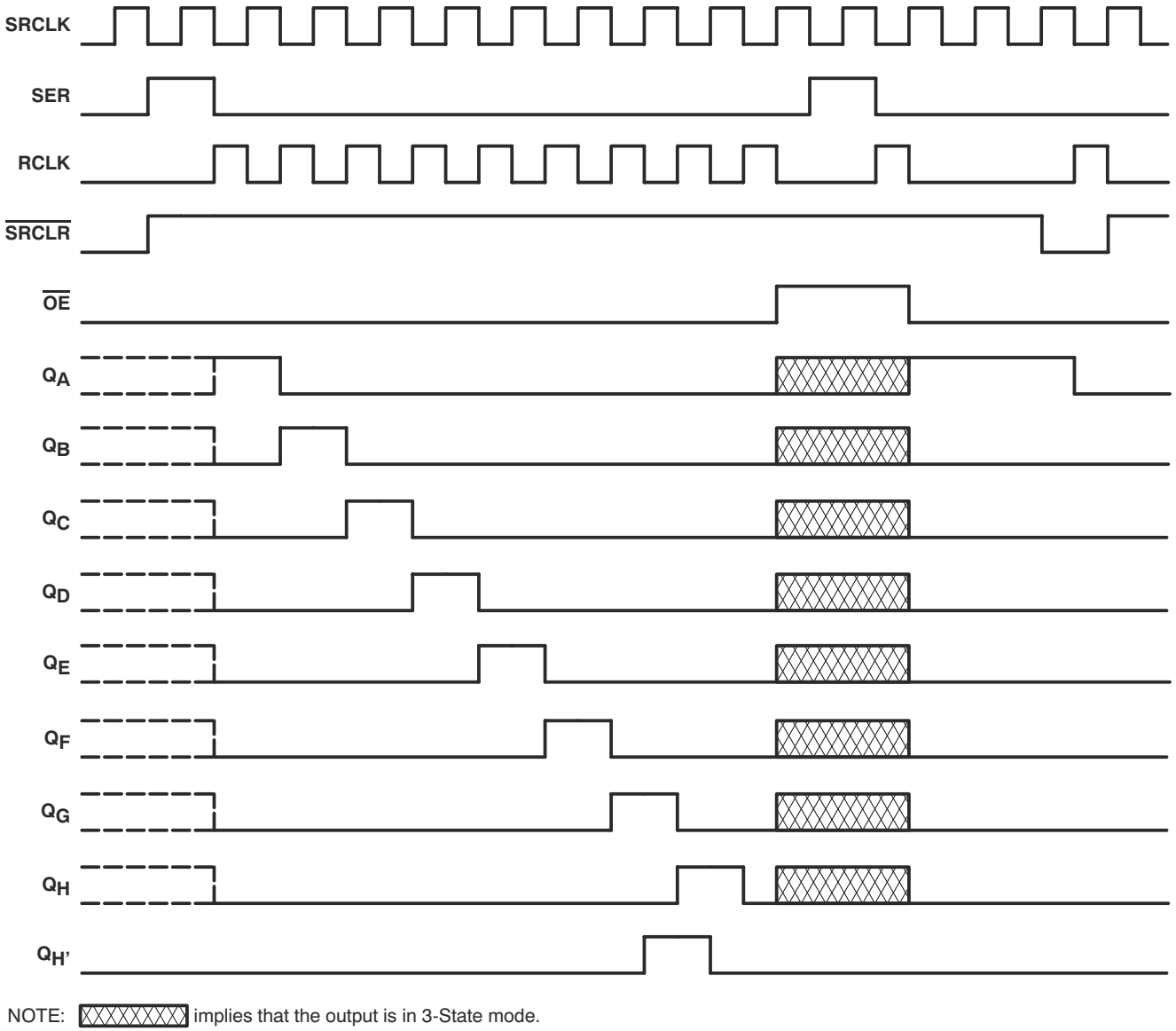

図 6-1. Timing Diagram

Copyright © 2022 Texas Instruments Incorporated

6.9 Typical Characteristics

T_A = 25°C

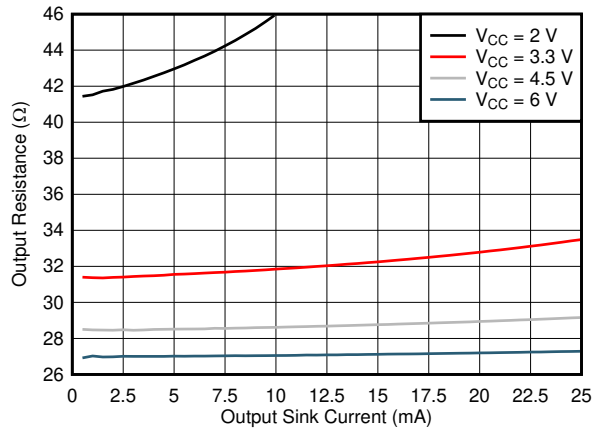

図 6-2. Output Driver Resistance in LOW State

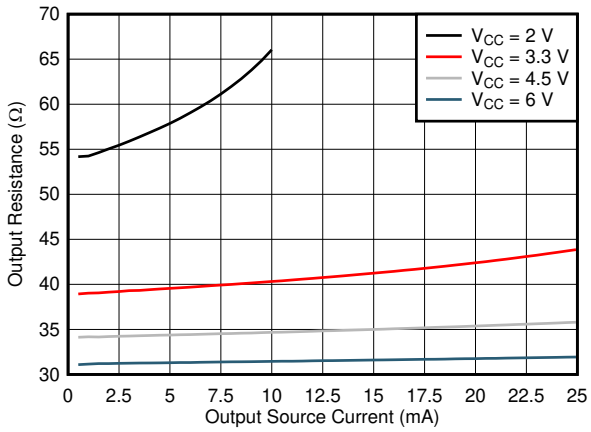

図 6-3. Output Driver Resistance in HIGH State

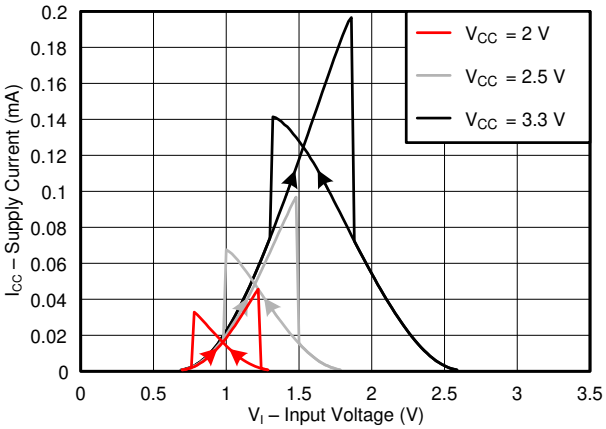

図 6-4. Supply Current Across Input Voltage, 2-, 2.5-, and 3.3-V Supply

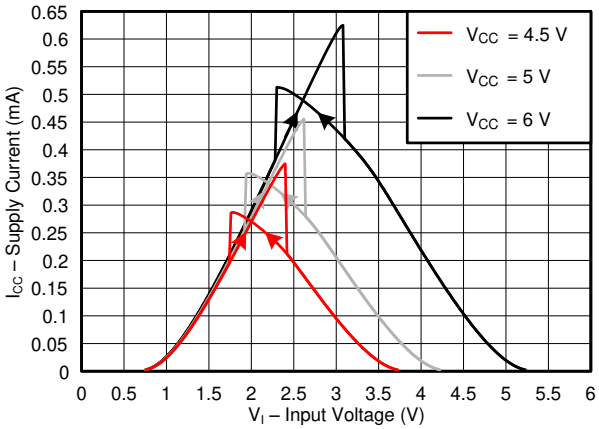

図 6-5. Supply Current Across Input Voltage, 4.5-, 5-, and 6-V Supply

7 Parameter Measurement Information

Phase relationships between waveforms were chosen arbitrarily. All input pulses are supplied by generators having the following characteristics: PRR ≤ 1 MHz, Z_O = 50 Ω, t_t < 2.5 ns.

For clock inputs, f_{max} is measured when the input duty cycle is 50%.

The outputs are measured one at a time with one input transition per measurement.

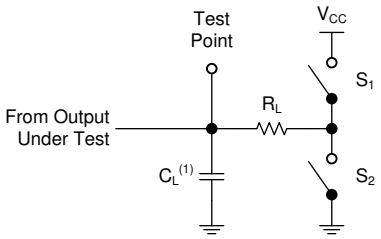

(1) C_L includes probe and test-fixture capacitance.

図 7-1. Load Circuit for 3-State Outputs

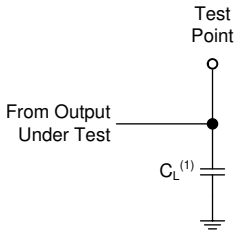

(1) C_L includes probe and test-fixture capacitance.

図 7-2. Load Circuit for Push-Pull Outputs

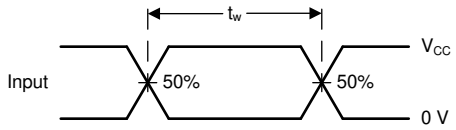

図 7-3. Voltage Waveforms, Pulse Duration

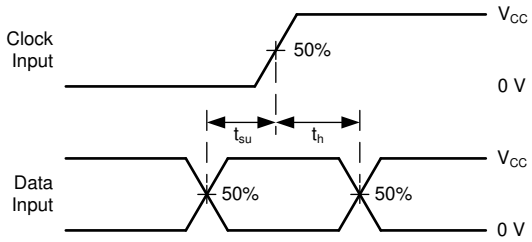

図 7-4. Voltage Waveforms, Setup and Hold Times

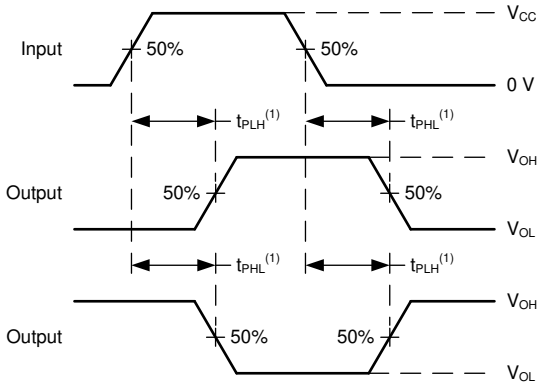

(1) The greater between t_{PLH} and t_{PHL} is the same as t_{pd}.

図 7-5. Voltage Waveforms Propagation Delays

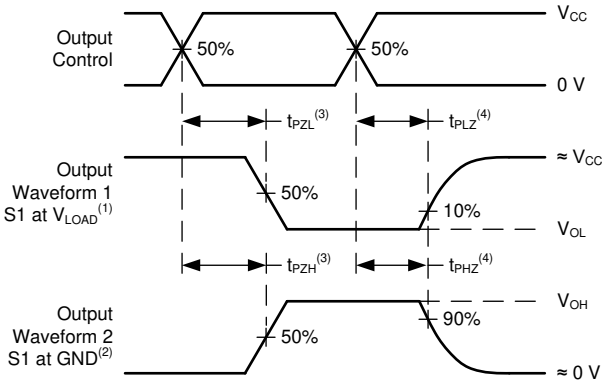

図 7-6. Voltage Waveforms Propagation Delays

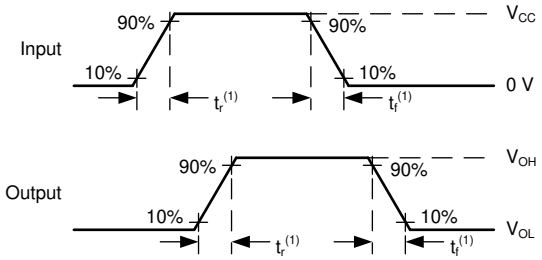

(1) The greater between t_r and t_f is the same as t_t.

図 7-7. Voltage Waveforms, Input and Output Transition Times

Copyright © 2022 Texas Instruments Incorporated

8 Detailed Description

8.1 Functional Block Diagram

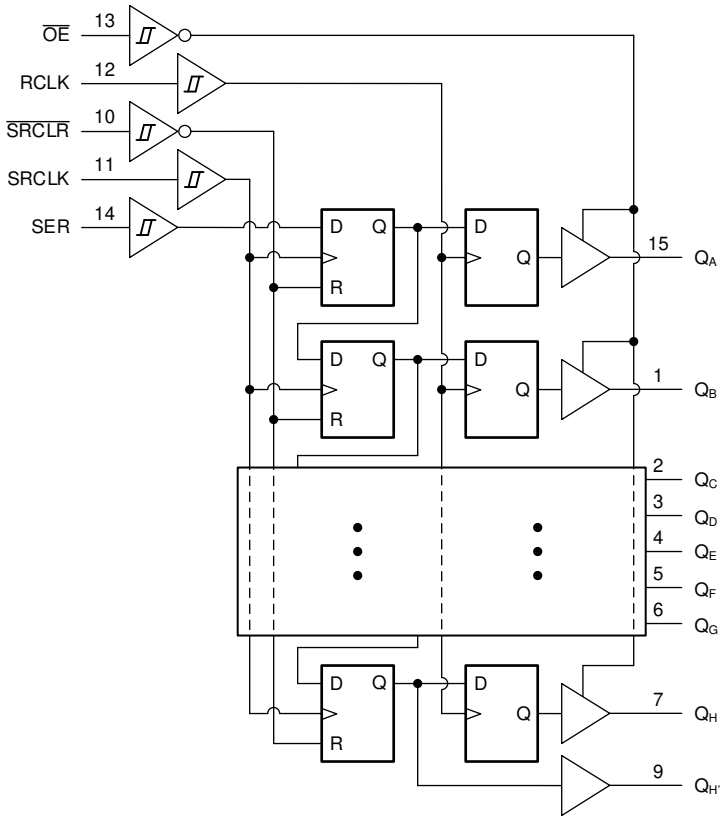

図 8-1. Logic Diagram (Positive Logic) for the SN74HCS595-Q1

8.2 Feature Description

8.2.1 Balanced CMOS 3-State Outputs

This device includes balanced CMOS 3-State outputs. The three states that these outputs can be in are driving high, driving low, and high impedance. The term *balanced* indicates that the device can sink and source similar currents. The drive capability of this device may create fast edges into light loads so routing and load conditions should be considered to prevent ringing. Additionally, the outputs of this device are capable of driving larger currents than the device can sustain without being damaged. It is important for the output power of the device to be limited to avoid damage due to overcurrent. The electrical and thermal limits defined in the *Absolute Maximum Ratings* must be followed at all times.

When placed into the high-impedance mode, the output will neither source nor sink current, with the exception of minor leakage current as defined in the *Electrical Characteristics* table. In the high-impedance state, the output voltage is not controlled by the device and is dependent on external factors. If no other drivers are connected to the node, then this is known as a floating node and the voltage is unknown. A pull-up or pull-down resistor can be connected to the output to provide a known voltage at the output while it is in the high-impedance state. The value of the resistor will depend on multiple factors, including parasitic capacitance and power consumption limitations. Typically, a 10 kΩ resistor can be used to meet these requirements.

Unused 3-state CMOS outputs should be left disconnected.

8.2.2 Balanced CMOS Push-Pull Outputs

This device includes balanced CMOS push-pull outputs. The term *balanced* indicates that the device can sink and source similar currents. The drive capability of this device may create fast edges into light loads so routing and load conditions should be considered to prevent ringing. Additionally, the outputs of this device are capable of driving larger currents than the device can sustain without being damaged. It is important for the output power of the device to be limited to avoid damage due to overcurrent. The electrical and thermal limits defined in the *Absolute Maximum Ratings* must be followed at all times.

Unused push-pull CMOS outputs should be left disconnected.

8.2.3 Latching Logic

This device includes latching logic circuitry. Latching circuits commonly include D-type latches and D-type flip-flops, but include all logic circuits that act as volatile memory.

When the device is powered on, the state of each latch is unknown. There is no default state for each latch at start-up.

The output state of each latching logic circuit only remains stable as long as power is applied to the device within the supply voltage range specified in the *Recommended Operating Conditions* table.

8.2.4 Clamp Diode Structure

The inputs and outputs to this device have both positive and negative clamping diodes as depicted in 図 8-2.

CAUTION

Voltages beyond the values specified in the *Absolute Maximum Ratings* table can cause damage to the device. The input and output voltage ratings may be exceeded if the input and output clamp-current ratings are observed.

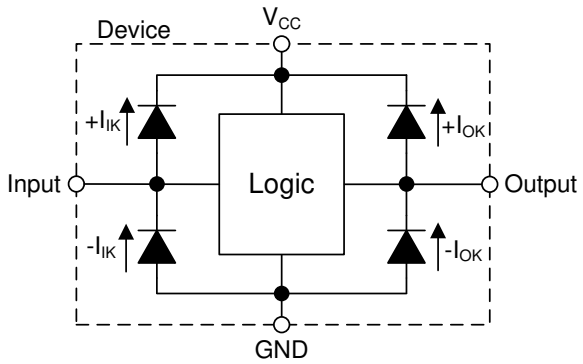

図 8-2. Electrical Placement of Clamping Diodes for Each Input and Output

Copyright © 2022 Texas Instruments Incorporated

8.2.5 Wettable Flanks

This device includes wettable flanks for at least one package. See the *Features* section on the front page of the data sheet for which packages include this feature.

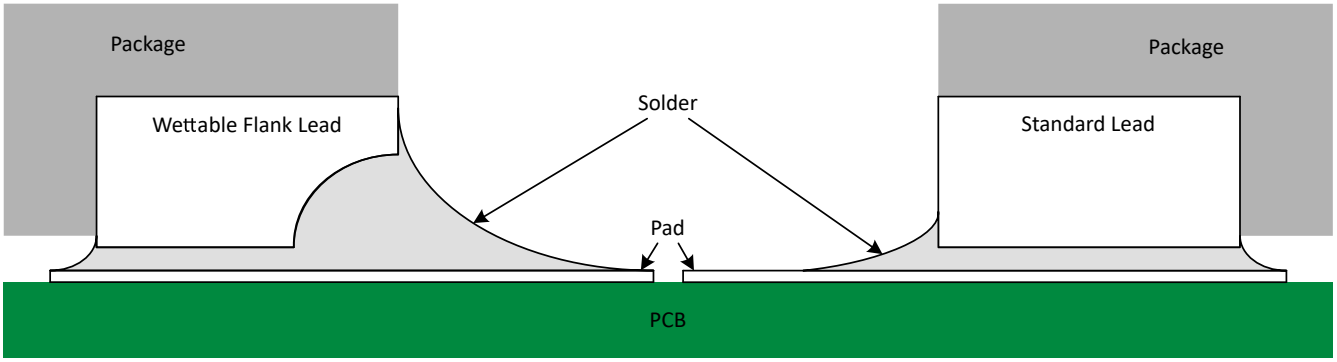

図 8-3. Simplified Cutaway View of Wettable-Flank QFN Package and Standard QFN Package After Soldering

Wettable flanks help improve side wetting after soldering which makes QFN packages easier to inspect with automatic optical inspection (AOI). A wettable flank can be dimpled or step-cut to provide additional surface area for solder adhesion which assists in reliably creating a side fillet as shown in 図 8-3. Please see the mechanical drawing for additional details.

8.3 Device Functional Modes

Function Table lists the functional modes of the SN74HCS595-Q1.

表 8-1. Function Table

INPUTS					FUNCTION
SER	SRCLK	$\overline{SRCLR}$	RCLK	$\overline{OE}$	
X	X	X	X	H	Outputs Q_A – Q_H are disabled
X	X	X	X	L	Outputs Q_A – Q_H are enabled.
X	X	L	X	X	Shift register is cleared.
L	↑	H	X	X	First stage of the shift register goes low. Other stages store the data of previous stage, respectively.
H	↑	H	X	X	First stage of the shift register goes high. Other stages store the data of previous stage, respectively.
X	X	H	↑	X	Shift-register data is stored in the storage register.
X	↑	H	↑	X	Data in shift register is stored in the storage register, the data is then shifted through.

9 Application and Implementation

Note

以下のアプリケーション情報は、TI の製品仕様に含まれるものではなく、TI ではその正確性または完全性を保証いたしません。個々の目的に対する製品の適合性については、お客様の責任で判断していただくことになります。お客様は自身の設計実装を検証しテストすることで、システムの機能を確認する必要があります。

9.1 Application Information

In this application, the SN74HCS595-Q1 is used to control seven-segment displays. Utilizing the serial output and combining a few of the input signals, this implementation reduces the number of I/O pins required to control the displays from sixteen to four. Unlike other I/O expanders, the SN74HCS595-Q1 does not need a communication interface for control. It can be easily operated with simple GPIO pins.

The OE pin is used to easily disable the outputs when the displays need to be turned off or connected to a PWM signal to control brightness. However, this pin can be tied low and the outputs of the SN74HCS595-Q1 can be controlled accordingly to turn off all the outputs reducing the I/O needed to three. There is no practical limitation to how many SN74HCS595-Q1 devices can be cascaded. To add more, the serial output will need to be connected to the following serial input and the clocks will need to be connected accordingly. With separate control for the shift registers and output registers, the desired digit can be displayed while the data for the next digit is loaded into the shift register.

At power-up, the initial state of the shift registers and output registers are unknown. To give them a defined state, the shift register needs to be cleared and then clocked into the output register. An RC can be connected to the $\overline{\text{SRCLR}}$ pin as shown in the Typical Application Block Diagram to initialize the shift register to all zeros. With the $\overline{\text{OE}}$ pin pulled up with a resistor, this process can be performed while the outputs are in a high impedance state eliminating any erroneous data causing issues with the displays.

9.2 Typical Application

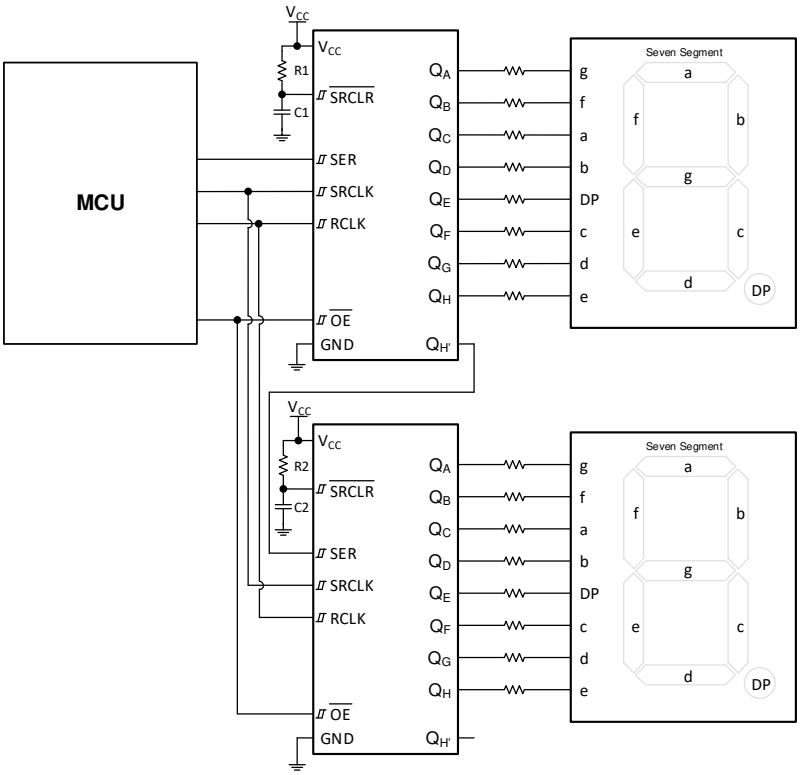

図 9-1. Typical Application Block Diagram

Copyright © 2022 Texas Instruments Incorporated

9.2.1 Design Requirements

- All signals in the system operate at 5 V
- Avoid unstable state by not having LOW signals on both inputs
- Q output is HIGH when $\overline{S}$ is LOW
  - Q output remains HIGH until $\overline{R}$ is LOW

9.2.1.1 Power Considerations

Ensure the desired supply voltage is within the range specified in the *Recommended Operating Conditions*. The supply voltage sets the device's electrical characteristics as described in the *Electrical Characteristics*.

The positive voltage supply must be capable of sourcing current equal to the total current to be sourced by all outputs of the SN74HCS595-Q1 plus the maximum static supply current, I_{CC}, listed in *Electrical Characteristics* and any transient current required for switching. The logic device can only source as much current as is provided by the positive supply source. Be sure not to exceed the maximum total current through V_{CC} listed in the *Absolute Maximum Ratings*.

The ground must be capable of sinking current equal to the total current to be sunk by all outputs of the SN74HCS595-Q1 plus the maximum supply current, I_{CC}, listed in *Electrical Characteristics*, and any transient current required for switching. The logic device can only sink as much current as can be sunk into its ground connection. Be sure not to exceed the maximum total current through GND listed in the *Absolute Maximum Ratings*.

The SN74HCS595-Q1 can drive a load with a total capacitance less than or equal to 50 pF while still meeting all of the data sheet specifications. Larger capacitive loads can be applied; however, it is not recommended to exceed 50 pF.

The SN74HCS595-Q1 can drive a load with total resistance described by $R_L \geq V_O / I_O$, with the output voltage and current defined in the *Electrical Characteristics* table with V_{OH} and V_{OL}. When outputting in the high state, the output voltage in the equation is defined as the difference between the measured output voltage and the supply voltage at the V_{CC} pin.

Total power consumption can be calculated using the information provided in CMOS Power Consumption and Cpd Calculation.

Thermal increase can be calculated using the information provided in Thermal Characteristics of Standard Linear and Logic (SLL) Packages and Devices.

CAUTION

The maximum junction temperature, $T_{J(max)}$ listed in the *Absolute Maximum Ratings*, is an additional limitation to prevent damage to the device. Do not violate any values listed in the *Absolute Maximum Ratings*. These limits are provided to prevent damage to the device.

9.2.1.2 Input Considerations

Input signals must cross $V_{t-(min)}$ to be considered a logic LOW, and $V_{t+(max)}$ to be considered a logic HIGH. Do not exceed the maximum input voltage range found in the *Absolute Maximum Ratings*.

Unused inputs must be terminated to either V_{CC} or ground. These can be directly terminated if the input is completely unused, or they can be connected with a pull-up or pull-down resistor if the input is to be used sometimes, but not always. A pull-up resistor is used for a default state of HIGH, and a pull-down resistor is used for a default state of LOW. The resistor size is limited by drive current of the controller, leakage current into the SN74HCS595-Q1, as specified in the *Electrical Characteristics*, and the desired input transition rate. A 10-kΩ resistor value is often used due to these factors.

The SN74HCS595-Q1 has no input signal transition rate requirements because it has Schmitt-trigger inputs.

Another benefit to having Schmitt-trigger inputs is the ability to reject noise. Noise with a large enough amplitude can still cause issues. To know how much noise is too much, please refer to the $\Delta V_{T(min)}$ in the *Electrical Characteristics*. This hysteresis value will provide the peak-to-peak limit.

Unlike what happens with standard CMOS inputs, Schmitt-trigger inputs can be held at any valid value without causing huge increases in power consumption. The typical additional current caused by holding an input at a value other than V_{CC} or ground is plotted in the *Typical Characteristics*.

Refer to the *Feature Description* section for additional information regarding the inputs for this device.

9.2.1.3 Output Considerations

The positive supply voltage is used to produce the output HIGH voltage. Drawing current from the output will decrease the output voltage as specified by the V_{OH} specification in the *Electrical Characteristics*. The ground voltage is used to produce the output LOW voltage. Sinking current into the output will increase the output voltage as specified by the V_{OL} specification in the *Electrical Characteristics*.

Push-pull outputs that could be in opposite states, even for a very short time period, should never be connected directly together. This can cause excessive current and damage to the device.

Two channels within the same device with the same input signals can be connected in parallel for additional output drive strength.

Unused outputs can be left floating. Do not connect outputs directly to V_{CC} or ground.

Refer to *Feature Description* section for additional information regarding the outputs for this device.

9.2.2 Detailed Design Procedure

1. Add a decoupling capacitor from V_{CC} to GND. The capacitor needs to be placed physically close to the device and electrically close to both the V_{CC} and GND pins. An example layout is shown in the *Layout* section.
2. Ensure the capacitive load at the output is ≤ 50 pF. This is not a hard limit, however it will ensure optimal performance. This can be accomplished by providing short, appropriately sized traces from the SN74HCS595-Q1 to one or more of the receiving devices.
3. Ensure the resistive load at the output is larger than (V_{CC} / $I_{O(max)}$) Ω. This will ensure that the maximum output current from the *Absolute Maximum Ratings* is not violated. Most CMOS inputs have a resistive load measured in MΩ; much larger than the minimum calculated above.
4. Thermal issues are rarely a concern for logic gates; the power consumption and thermal increase, however, can be calculated using the steps provided in the application report, CMOS Power Consumption and Cpd Calculation.

Copyright © 2022 Texas Instruments Incorporated

9.2.3 Application Curve

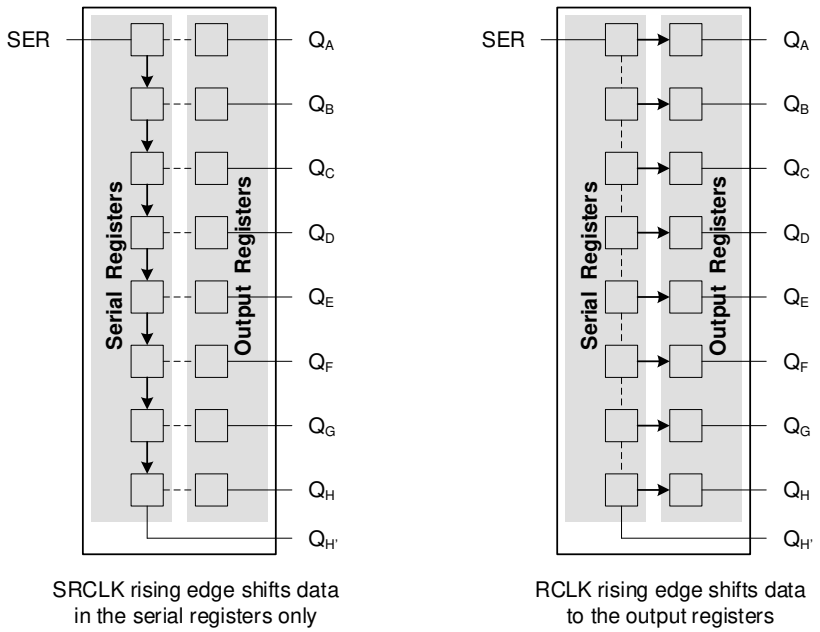

図 9-2. Simplified Functional Diagram Showing Clock Operation

10 Power Supply Recommendations

The power supply can be any voltage between the minimum and maximum supply voltage rating located in the *Recommended Operating Conditions*. Each V_{CC} terminal should have a good bypass capacitor to prevent power disturbance. A 0.1-µF capacitor is recommended for this device. It is acceptable to parallel multiple bypass caps to reject different frequencies of noise. The 0.1-µF and 1-µF capacitors are commonly used in parallel. The bypass capacitor should be installed as close to the power terminal as possible for best results, as shown in the following layout example.

11 Layout

11.1 Layout Guidelines

When using multiple-input and multiple-channel logic devices inputs must not ever be left floating. In many cases, functions or parts of functions of digital logic devices are unused; for example, when only two inputs of a triple-input AND gate are used or only 3 of the 4 buffer gates are used. Such unused input pins must not be left unconnected because the undefined voltages at the outside connections result in undefined operational states. All unused inputs of digital logic devices must be connected to a logic high or logic low voltage, as defined by the input voltage specifications, to prevent them from floating. The logic level that must be applied to any particular unused input depends on the function of the device. Generally, the inputs are tied to GND or V_{CC}, whichever makes more sense for the logic function or is more convenient.

11.2 Layout Example

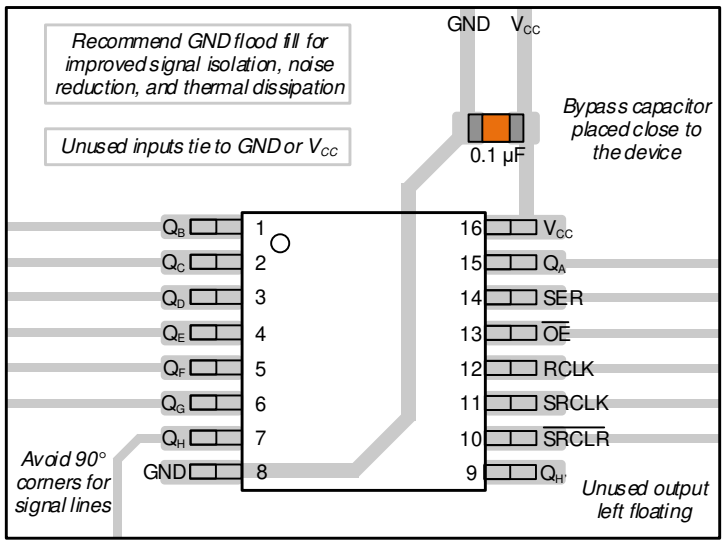

図 11-1. Example Layout for the SN74HCS595-Q1.

Copyright © 2022 Texas Instruments Incorporated

12 Device and Documentation Support

TI offers an extensive line of development tools. Tools and software to evaluate the performance of the device, generate code, and develop solutions are listed below.

12.1 Documentation Support

12.1.1 Related Documentation

For related documentation, see the following:

- Texas Instruments, *HCMOS Design Considerations* application report
- Texas Instruments, *CMOS Power Consumption and C_{pd} Calculation* application report
- Texas Instruments, *Designing With Logic* application report

12.2 Receiving Notification of Documentation Updates

To receive notification of documentation updates, navigate to the device product folder on ti.com. Click on *Subscribe to updates* to register and receive a weekly digest of any product information that has changed. For change details, review the revision history included in any revised document.

12.3 サポート・リソース

TI E2E™ サポート・フォーラムは、エンジニアが検証済みの回答と設計に関するヒントをエキスパートから迅速かつ直接得ることができる場所です。既存の回答を検索したり、独自の質問をしたりすることで、設計で必要な支援を迅速に得ることができます。

リンクされているコンテンツは、該当する貢献者により、現状のまま提供されるものです。これらは TI の仕様を構成するものではなく、必ずしも TI の見解を反映したものではありません。TI の使用条件を参照してください。

12.4 Trademarks

TI E2E™ is a trademark of Texas Instruments.
すべての商標は、それぞれの所有者に帰属します。

12.5 Electrostatic Discharge Caution

This integrated circuit can be damaged by ESD. Texas Instruments recommends that all integrated circuits be handled with appropriate precautions. Failure to observe proper handling and installation procedures can cause damage.

ESD damage can range from subtle performance degradation to complete device failure. Precision integrated circuits may be more susceptible to damage because very small parametric changes could cause the device not to meet its published specifications.

12.6 Glossary

TI Glossary — This glossary lists and explains terms, acronyms, and definitions.

13 Mechanical, Packaging, and Orderable Information

The following pages include mechanical, packaging, and orderable information. This information is the most current data available for the designated devices. This data is subject to change without notice and revision of this document. For browser-based versions of this data sheet, refer to the left-hand navigation.

PACKAGING INFORMATION

Orderable part number	Status (1)	Material type (2)	Package | Pins	Package qty | Carrier	RoHS (3)	Lead finish/ Ball material (4)	MSL rating/ Peak reflow (5)	Op temp (°C)	Part marking (6)
SN74HCS595QBQBRQ1	Active	Production	WQFN (BQB) | 16	3000 | LARGE T&R	Yes	NIPDAU	Level-1-260C-UNLIM	-40 to 125	CS595Q
SN74HCS595QBQBRQ1.A	Active	Production	WQFN (BQB) | 16	3000 | LARGE T&R	Yes	NIPDAU	Level-1-260C-UNLIM	-40 to 125	CS595Q
SN74HCS595QDRQ1	Active	Production	SOIC (D) | 16	2500 | LARGE T&R	Yes	NIPDAU	Level-1-260C-UNLIM	-40 to 125	HCS595Q
SN74HCS595QDRQ1.A	Active	Production	SOIC (D) | 16	2500 | LARGE T&R	Yes	NIPDAU	Level-1-260C-UNLIM	-40 to 125	HCS595Q
SN74HCS595QDYYRQ1	Active	Production	SOT-23-THIN (DYY) | 16	3000 | LARGE T&R	Yes	NIPDAU	Level-1-260C-UNLIM	-40 to 125	HCS595Q
SN74HCS595QDYYRQ1.A	Active	Production	SOT-23-THIN (DYY) | 16	3000 | LARGE T&R	Yes	NIPDAU	Level-1-260C-UNLIM	-40 to 125	HCS595Q
SN74HCS595QPWRQ1	Active	Production	TSSOP (PW) | 16	2000 | LARGE T&R	Yes	NIPDAU | SN	Level-1-260C-UNLIM	-40 to 125	HCS595Q
SN74HCS595QPWRQ1.A	Active	Production	TSSOP (PW) | 16	2000 | LARGE T&R	Yes	NIPDAU	Level-1-260C-UNLIM	-40 to 125	HCS595Q
SN74HCS595QWBQBRQ1	Active	Production	WQFN (BQB) | 16	3000 | LARGE T&R	Yes	NIPDAU	Level-1-260C-UNLIM	-40 to 125	CS595Q
SN74HCS595QWBQBRQ1.A	Active	Production	WQFN (BQB) | 16	3000 | LARGE T&R	Yes	NIPDAU	Level-1-260C-UNLIM	-40 to 125	CS595Q

(1) **Status:** For more details on status, see our product life cycle.

(2) **Material type:** When designated, preproduction parts are prototypes/experimental devices, and are not yet approved or released for full production. Testing and final process, including without limitation quality assurance, reliability performance testing, and/or process qualification, may not yet be complete, and this item is subject to further changes or possible discontinuation. If available for ordering, purchases will be subject to an additional waiver at checkout, and are intended for early internal evaluation purposes only. These items are sold without warranties of any kind.

(3) **RoHS values:** Yes, No, RoHS Exempt. See the TI RoHS Statement for additional information and value definition.

(4) **Lead finish/Ball material:** Parts may have multiple material finish options. Finish options are separated by a vertical ruled line. Lead finish/Ball material values may wrap to two lines if the finish value exceeds the maximum column width.

(5) **MSL rating/Peak reflow:** The moisture sensitivity level ratings and peak solder (reflow) temperatures. In the event that a part has multiple moisture sensitivity ratings, only the lowest level per JEDEC standards is shown. Refer to the shipping label for the actual reflow temperature that will be used to mount the part to the printed circuit board.

(6) **Part marking:** There may be an additional marking, which relates to the logo, the lot trace code information, or the environmental category of the part.

Multiple part markings will be inside parentheses. Only one part marking contained in parentheses and separated by a "~" will appear on a part. If a line is indented then it is a continuation of the previous line and the two combined represent the entire part marking for that device.

Important Information and Disclaimer: The information provided on this page represents TI's knowledge and belief as of the date that it is provided. TI bases its knowledge and belief on information provided by third parties, and makes no representation or warranty as to the accuracy of such information. Efforts are underway to better integrate information from third parties. TI has taken and continues to take reasonable steps to provide representative and accurate information but may not have conducted destructive testing or chemical analysis on incoming materials and chemicals. TI and TI suppliers consider certain information to be proprietary, and thus CAS numbers and other limited information may not be available for release.

In no event shall TI's liability arising out of such information exceed the total purchase price of the TI part(s) at issue in this document sold by TI to Customer on an annual basis.

OTHER QUALIFIED VERSIONS OF SN74HCS595-Q1 :

- Catalog : SN74HCS595

NOTE: Qualified Version Definitions:

- Catalog - TI's standard catalog product

TAPE AND REEL INFORMATION

REEL DIMENSIONS

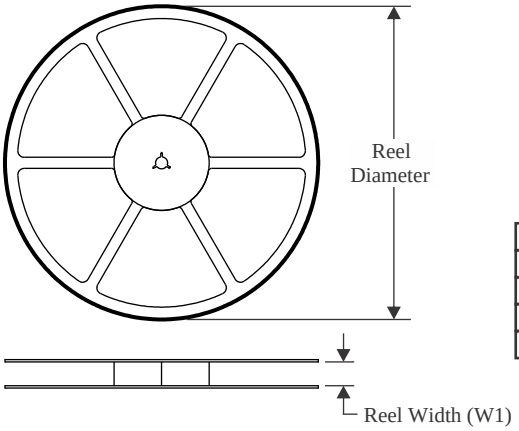

TAPE DIMENSIONS

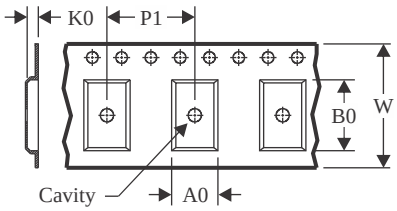

A0	Dimension designed to accommodate the component width
B0	Dimension designed to accommodate the component length
K0	Dimension designed to accommodate the component thickness
W	Overall width of the carrier tape
P1	Pitch between successive cavity centers

QUADRANT ASSIGNMENTS FOR PIN 1 ORIENTATION IN TAPE

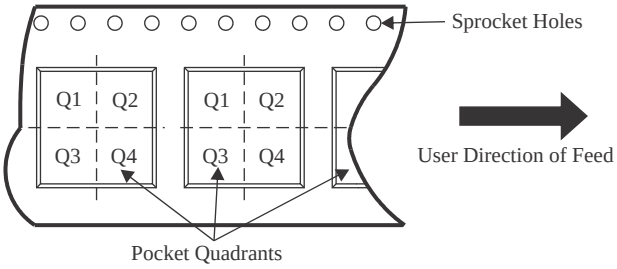

*All dimensions are nominal

Device	Package Type	Package Drawing	Pins	SPQ	Reel Diameter (mm)	Reel Width W1 (mm)	A0 (mm)	B0 (mm)	K0 (mm)	P1 (mm)	W (mm)	Pin1 Quadrant
SN74HCS595QBQBRQ1	WQFN	BQB	16	3000	180.0	12.4	2.8	3.8	1.2	4.0	12.0	Q1
SN74HCS595QDYYRQ1	SOT-23-THIN	DYY	16	3000	330.0	12.4	4.8	3.6	1.6	8.0	12.0	Q3
SN74HCS595QPWRQ1	TSSOP	PW	16	2000	330.0	12.4	6.9	5.6	1.6	8.0	12.0	Q1
SN74HCS595QPWRQ1	TSSOP	PW	16	2000	330.0	12.4	6.9	5.6	1.6	8.0	12.0	Q1
SN74HCS595QWBQBRQ1	WQFN	BQB	16	3000	180.0	12.4	2.8	3.8	1.2	4.0	12.0	Q1

TAPE AND REEL BOX DIMENSIONS

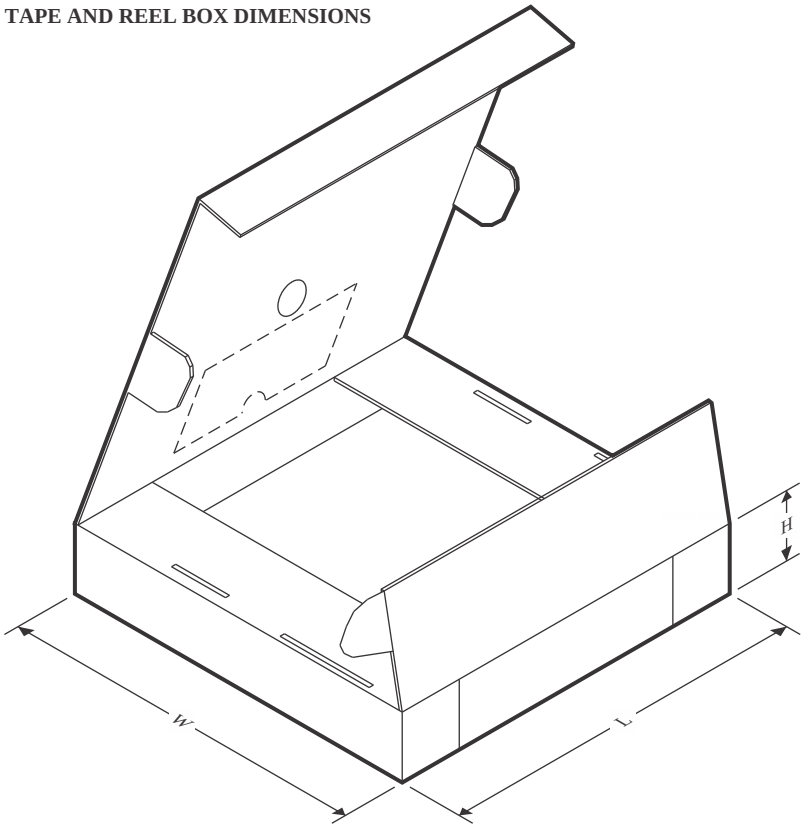

*All dimensions are nominal

Device	Package Type	Package Drawing	Pins	SPQ	Length (mm)	Width (mm)	Height (mm)
SN74HCS595QBQBRQ1	WQFN	BQB	16	3000	210.0	185.0	35.0
SN74HCS595QDYYRQ1	SOT-23-THIN	DYY	16	3000	336.6	336.6	31.8
SN74HCS595QPWRQ1	TSSOP	PW	16	2000	356.0	356.0	35.0
SN74HCS595QPWRQ1	TSSOP	PW	16	2000	353.0	353.0	32.0
SN74HCS595QWBQBRQ1	WQFN	BQB	16	3000	210.0	185.0	35.0

D (R–PDSO–G16) PLASTIC SMALL OUTLINE

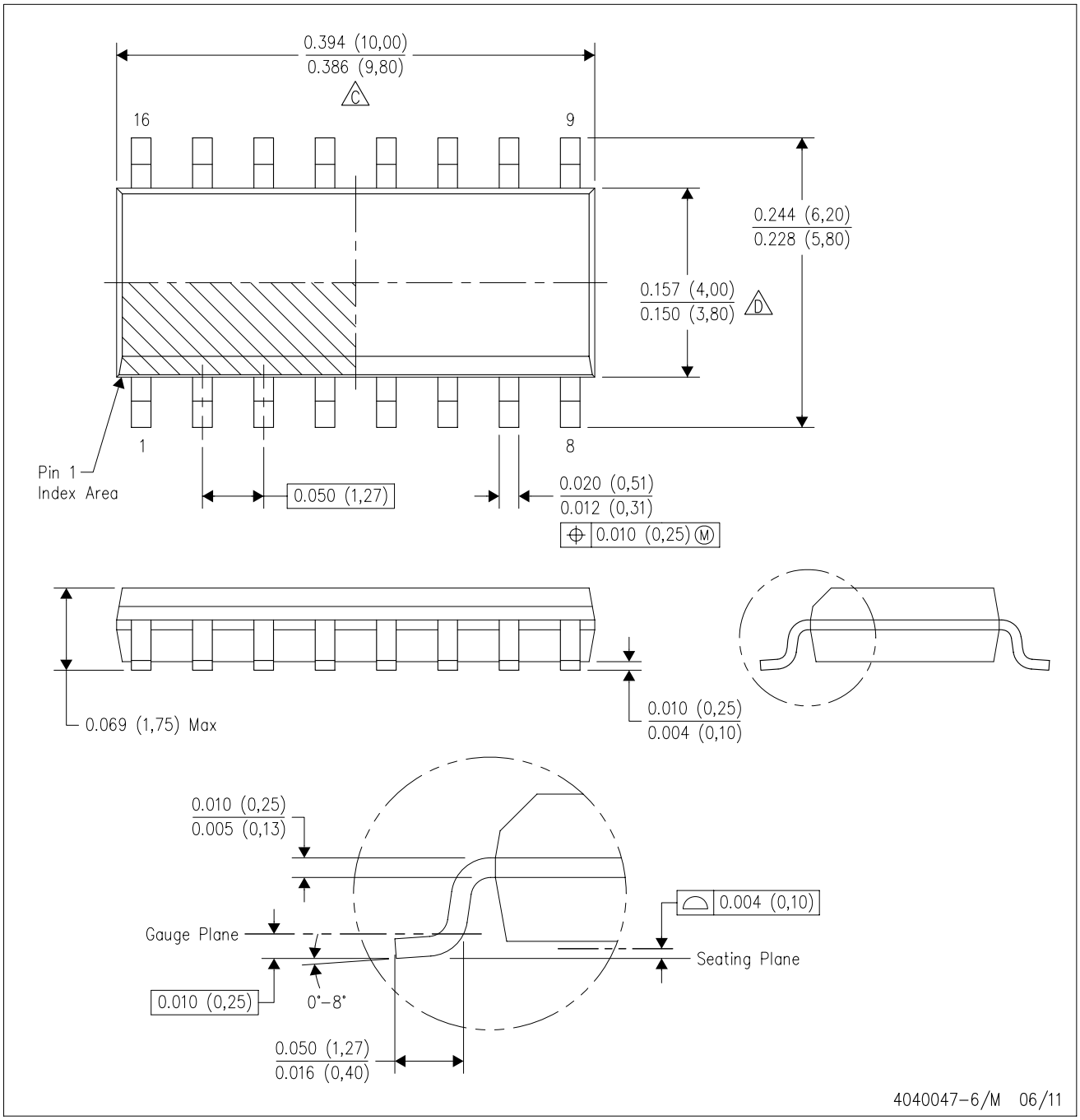

NOTES:
A. All linear dimensions are in inches (millimeters).
B. This drawing is subject to change without notice.
C. Body length does not include mold flash, protrusions, or gate burrs. Mold flash, protrusions, or gate burrs shall not exceed 0.006 (0,15) each side.
D. Body width does not include interlead flash. Interlead flash shall not exceed 0.017 (0,43) each side.
E. Reference JEDEC MS–012 variation AC.

GENERIC PACKAGE VIEW

BQB 16

WQFN - 0.8 mm max height

2.5 x 3.5, 0.5 mm pitch

PLASTIC QUAD FLATPACK - NO LEAD

This image is a representation of the package family, actual package may vary.
Refer to the product data sheet for package details.

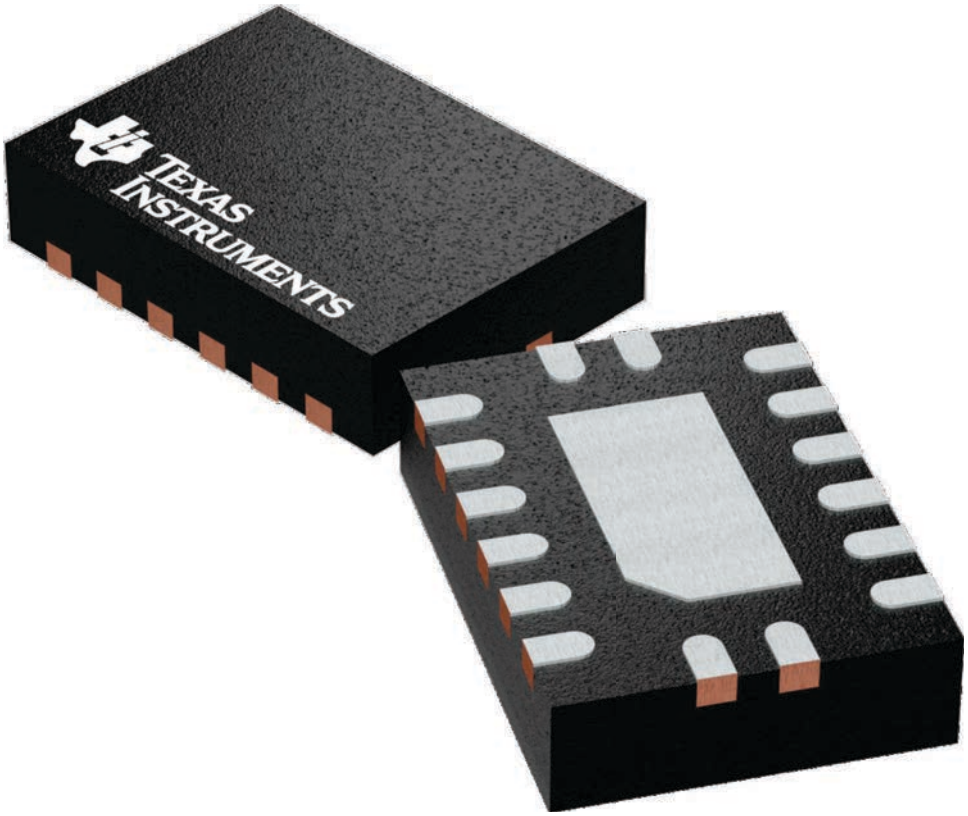

4226161/A

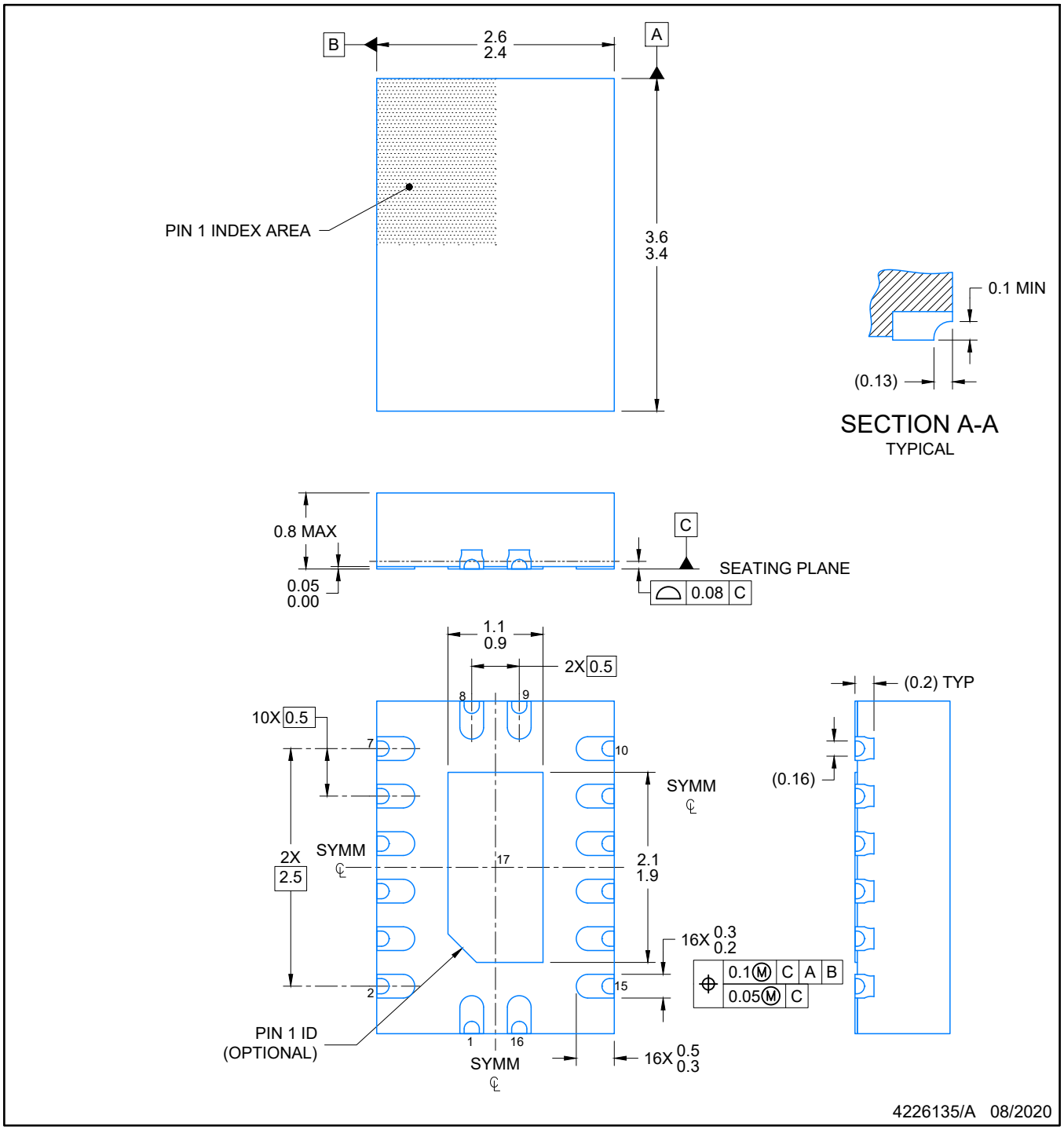

NOTES:

1. All linear dimensions are in millimeters. Any dimensions in parenthesis are for reference only. Dimensioning and tolerancing per ASME Y14.5M.
2. This drawing is subject to change without notice.
3. The package thermal pad must be soldered to the printed circuit board for optimal thermal and mechanical performance.

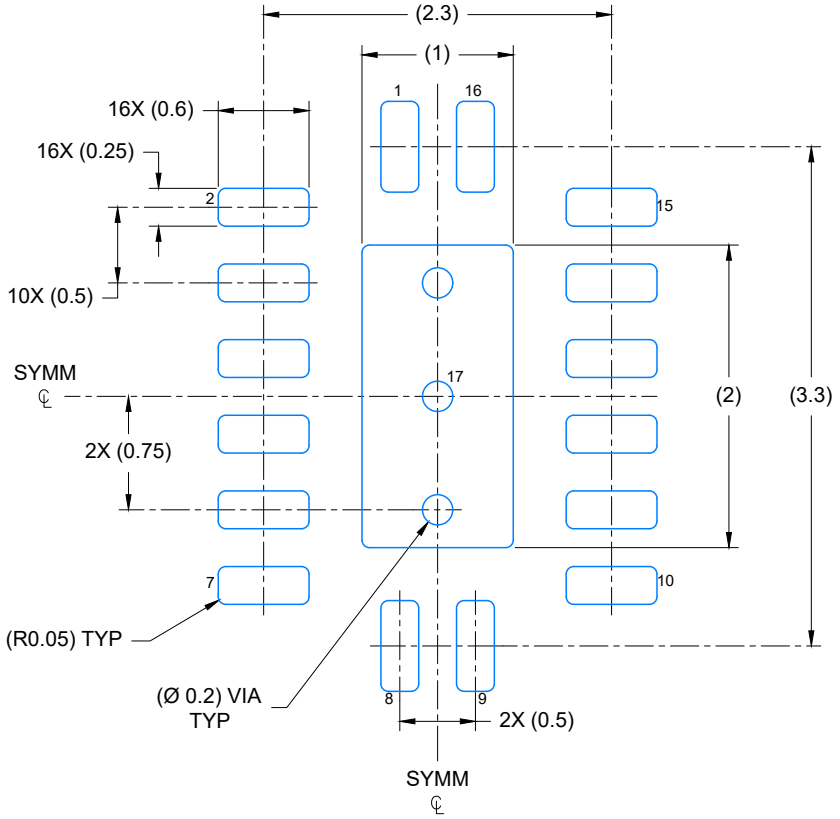

LAND PATTERN EXAMPLE
EXPOSED METAL SHOWN
SCALE: 20X

4226135/A 08/2020

NOTES: (continued)

4. This package is designed to be soldered to a thermal pad on the board. For more information, see Texas Instruments literature number SLUA271 (www.ti.com/lit/slua271).
5. Vias are optional depending on application, refer to device data sheet. If any vias are implemented, refer to their locations shown on this view. It is recommended that vias under paste be filled, plugged or tented.

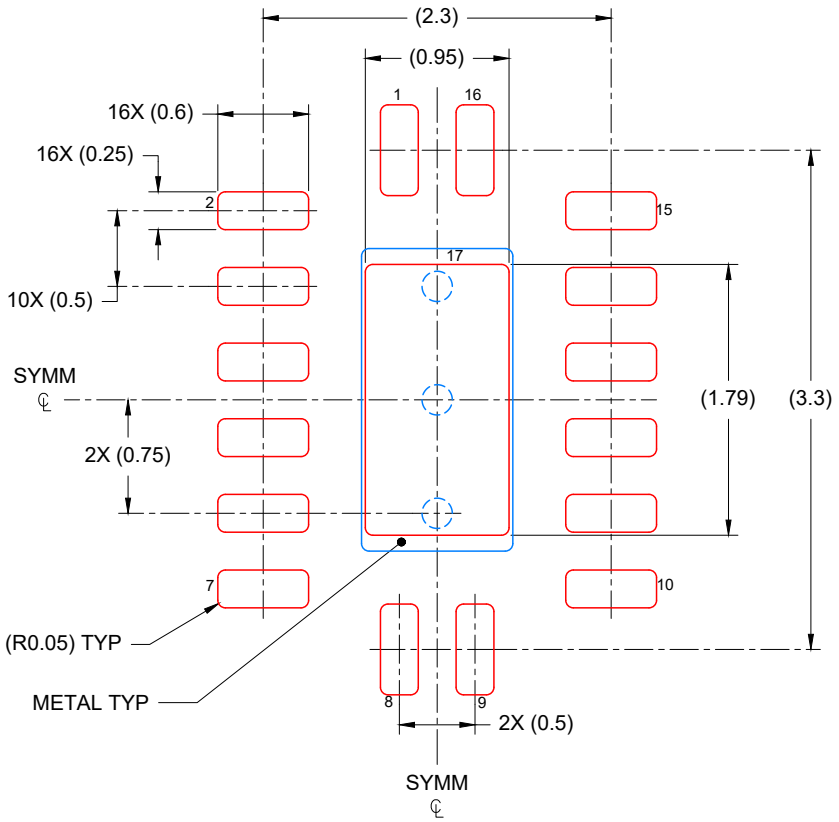

SOLDER PASTE EXAMPLE
BASED ON 0.125 mm THICK STENCIL

EXPOSED PAD
85% PRINTED COVERAGE BY AREA
SCALE: 20X

4226135/A 08/2020

NOTES: (continued)

6. Laser cutting apertures with trapezoidal walls and rounded corners may offer better paste release. IPC-7525 may have alternate design recommendations.

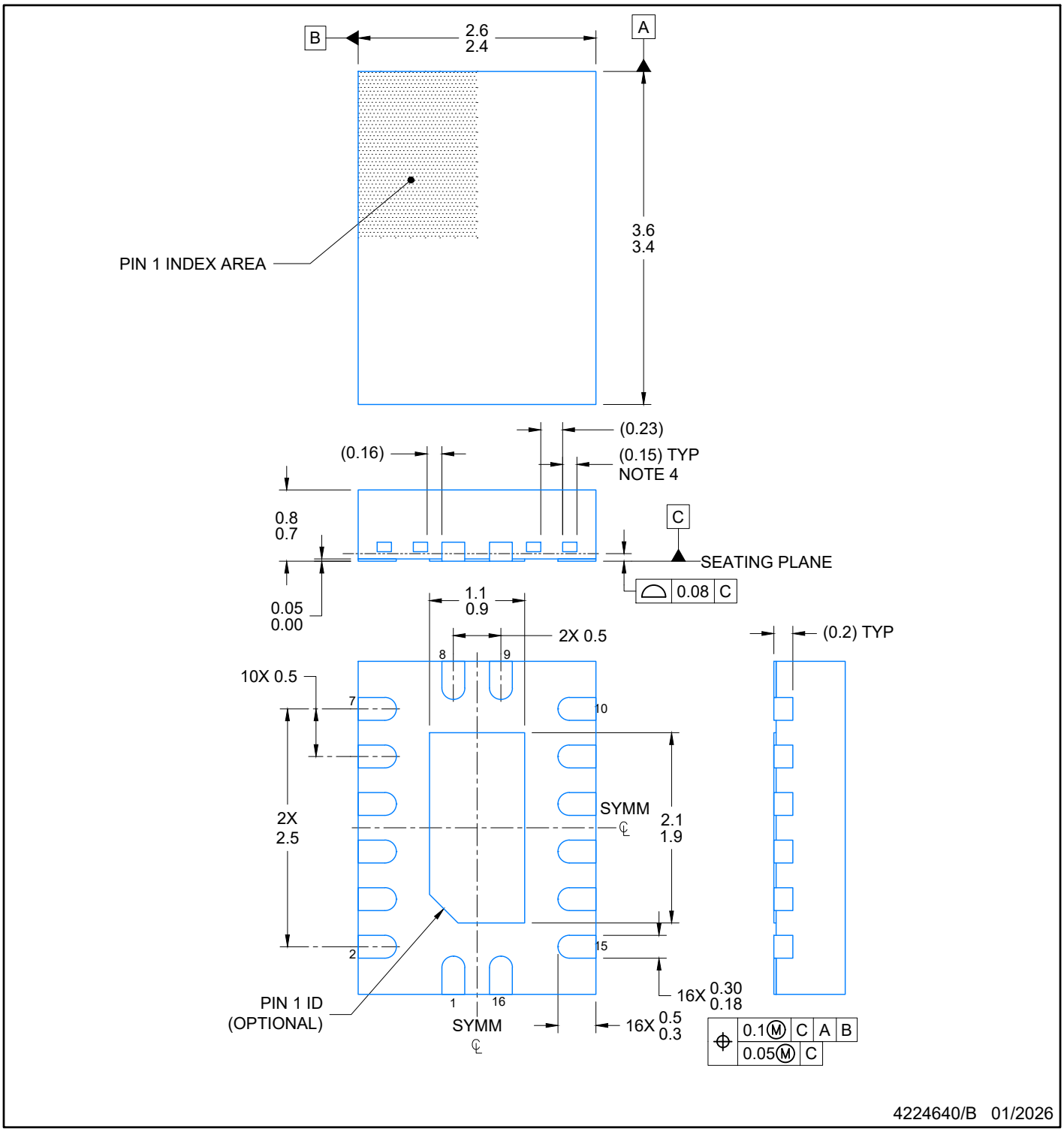

NOTES:

1. All linear dimensions are in millimeters. Any dimensions in parenthesis are for reference only. Dimensioning and tolerancing per ASME Y14.5M.
2. This drawing is subject to change without notice.
3. The package thermal pad must be soldered to the printed circuit board for optimal thermal and mechanical performance.
4. Features may differ or may not be present

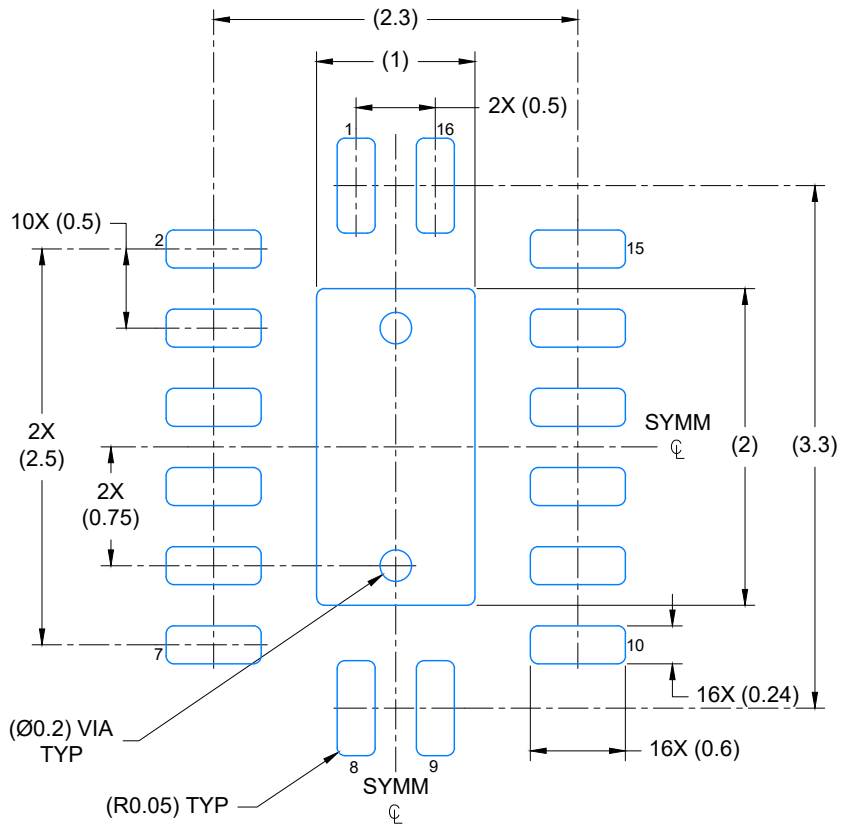

LAND PATTERN EXAMPLE
EXPOSED METAL SHOWN
SCALE: 20X

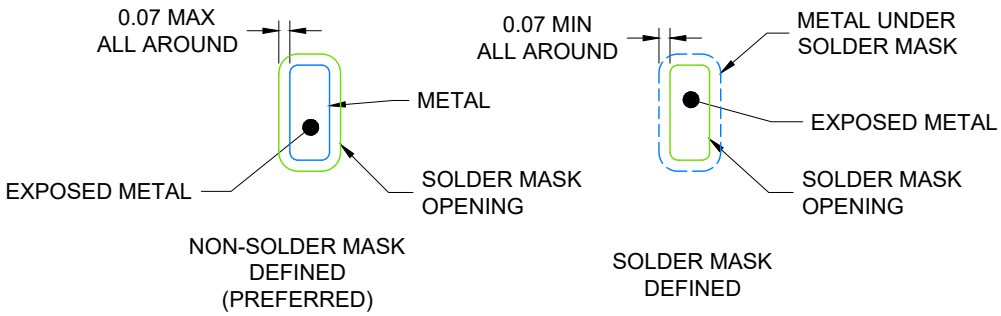

4224640/B 01/2026

1. NOTES: (continued)

   5. This package is designed to be soldered to a thermal pad on the board. For more information, see Texas Instruments literature number SLUA271 (www.ti.com/lit/slua271).

   6. Vias are optional depending on application, refer to device data sheet. If any vias are implemented, refer to their locations shown on this view. It is recommended that vias under paste be filled, plugged or tented.

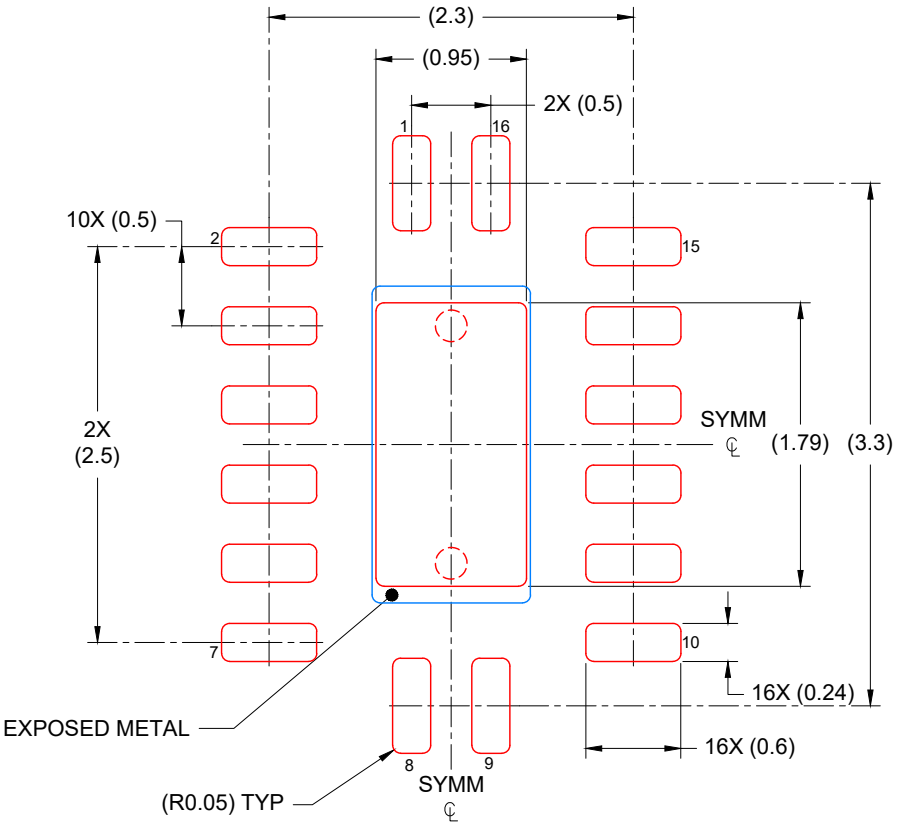

SOLDER PASTE EXAMPLE
BASED ON 0.125 mm THICK STENCIL

EXPOSED PAD
85% PRINTED COVERAGE BY AREA
SCALE: 20X

4224640/B 01/2026

NOTES: (continued)

7. Laser cutting apertures with trapezoidal walls and rounded corners may offer better paste release. IPC-7525 may have alternate design recommendations.

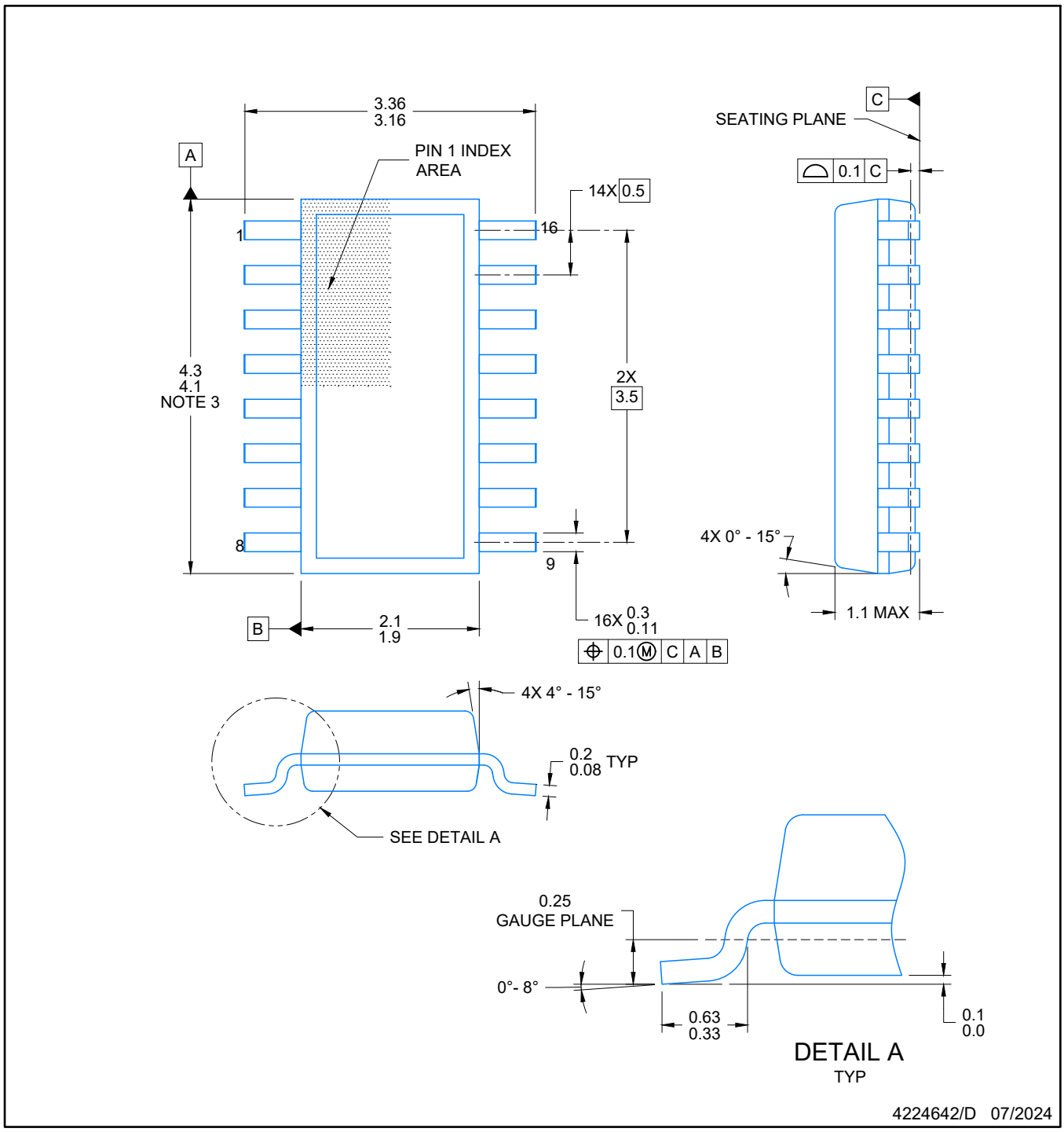

NOTES:

1. All linear dimensions are in millimeters. Any dimensions in parenthesis are for reference only. Dimensioning and tolerancing per ASME Y14.5M.
2. This drawing is subject to change without notice.
3. This dimension does not include mold flash, protrusions, or gate burrs. Mold flash, protrusions, or gate burrs shall not exceed 0.15 per side.
4. This dimension does not include interlead flash. Interlead flash shall not exceed 0.50 per side.
5. Reference JEDEC Registration MO-345, Variation AA

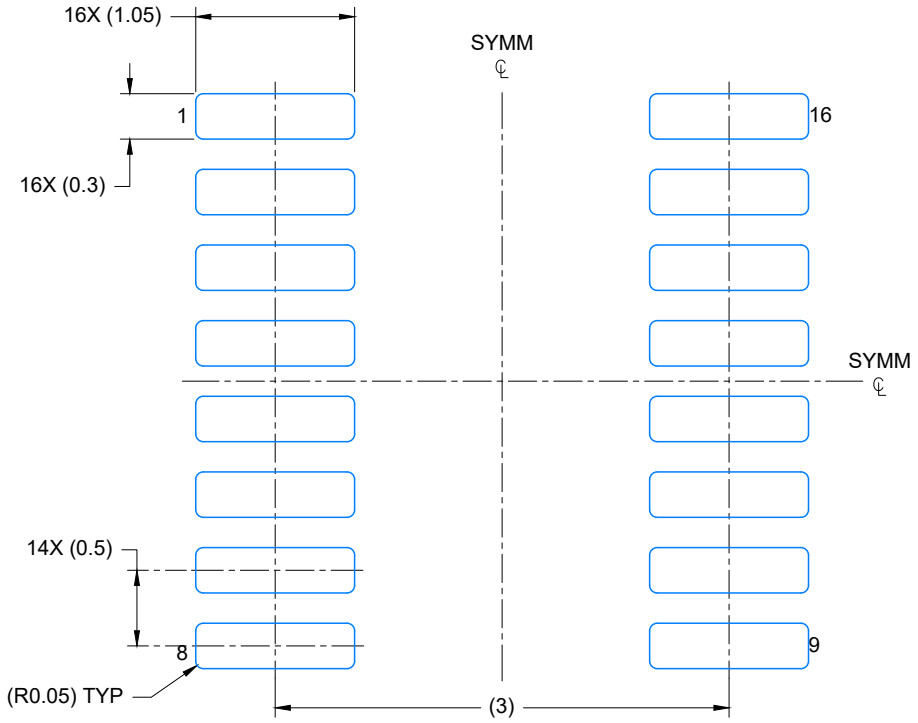

LAND PATTERN EXAMPLE
EXPOSED METAL SHOWN
SCALE: 20X

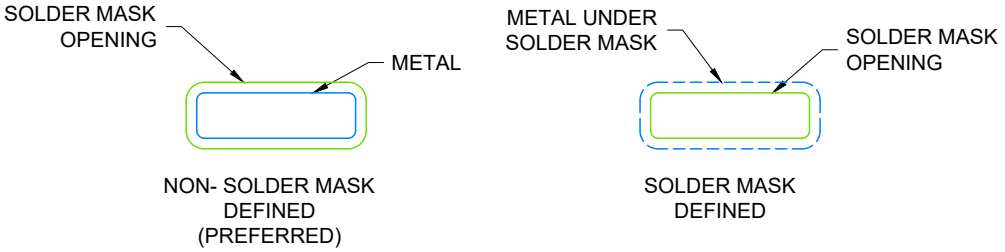

SOLDER MASK DETAILS

4224642/D 07/2024

NOTES: (continued)

6. Publication IPC-7351 may have alternate designs.
7. Solder mask tolerances between and around signal pads can vary based on board fabrication site.

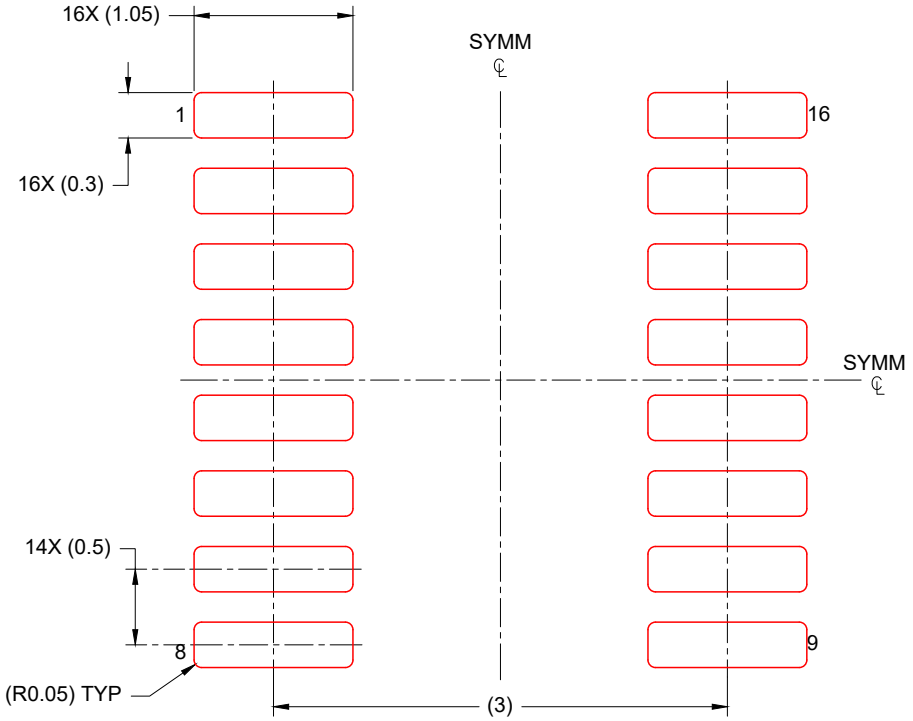

SOLDER PASTE EXAMPLE
BASED ON 0.125 mm THICK STENCIL
SCALE: 20X

4224642/D 07/2024

NOTES: (continued)

8. Laser cutting apertures with trapezoidal walls and rounded corners may offer better paste release. IPC-7525 may have alternate design recommendations.
9. Board assembly site may have different recommendations for stencil design.

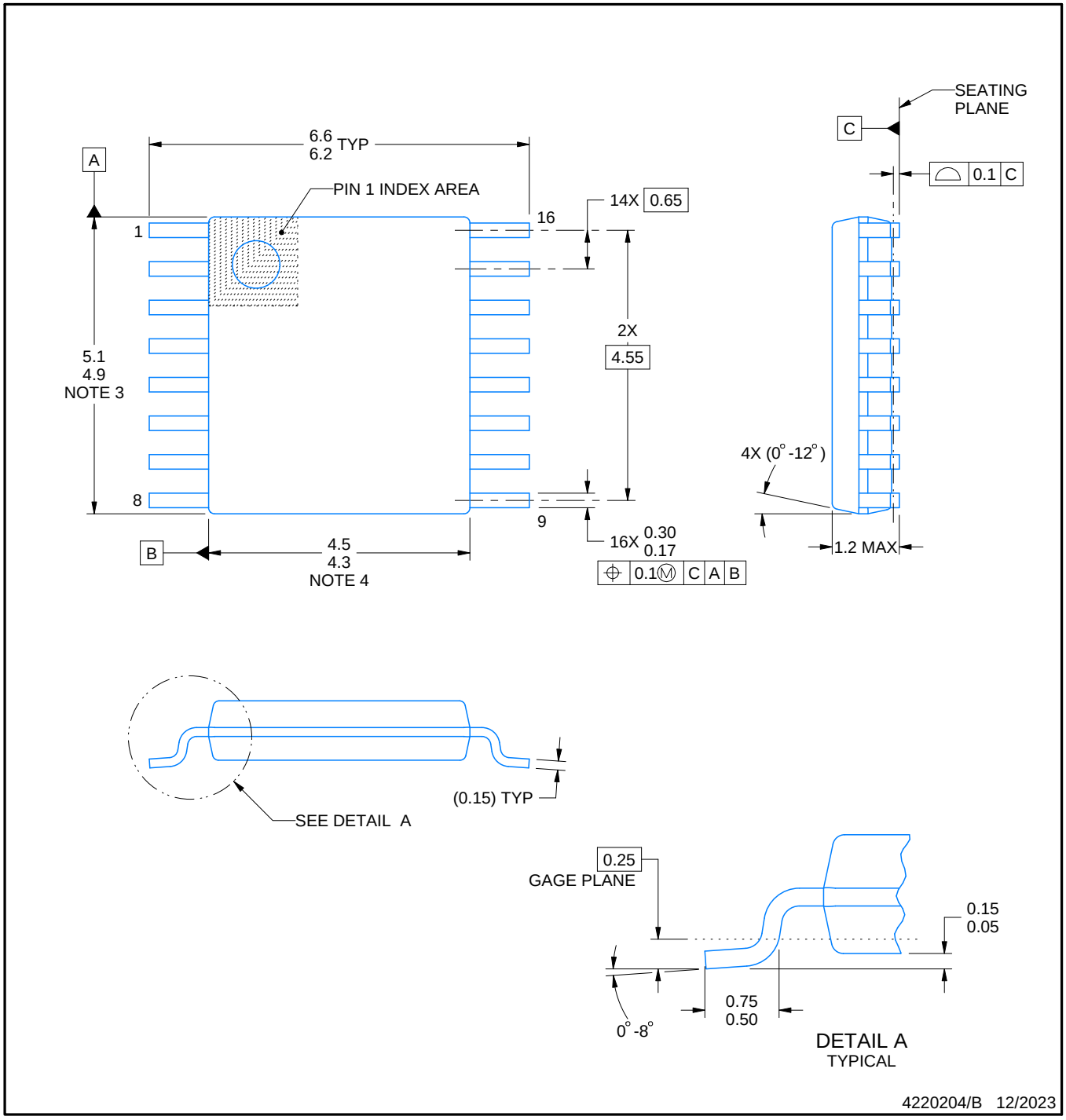

NOTES:

1. All linear dimensions are in millimeters. Any dimensions in parenthesis are for reference only. Dimensioning and tolerancing per ASME Y14.5M.
2. This drawing is subject to change without notice.
3. This dimension does not include mold flash, protrusions, or gate burrs. Mold flash, protrusions, or gate burrs shall not exceed 0.15 mm per side.
4. This dimension does not include interlead flash. Interlead flash shall not exceed 0.25 mm per side.
5. Reference JEDEC registration MO-153.

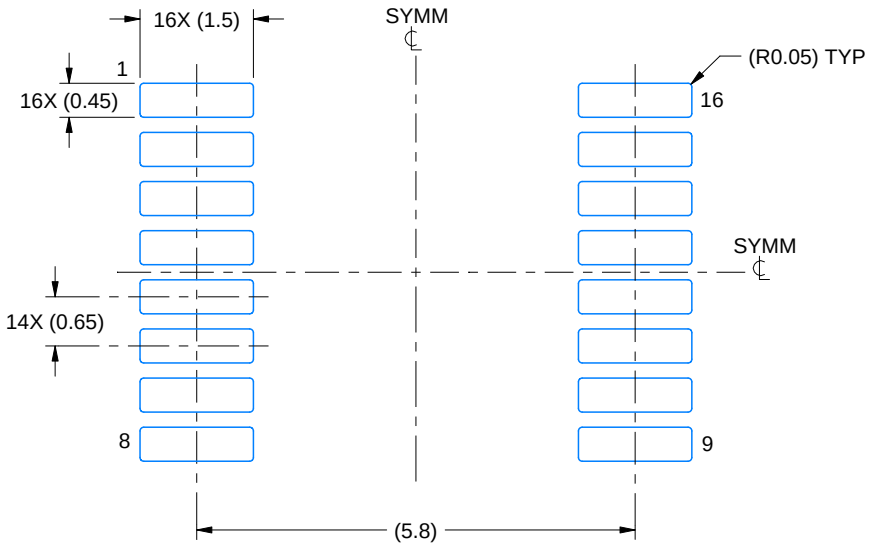

LAND PATTERN EXAMPLE
EXPOSED METAL SHOWN
SCALE: 10X

NON-SOLDER MASK DEFINED (PREFERRED)

SOLDER MASK DEFINED

SOLDER MASK DETAILS

4220204/B 12/2023

NOTES: (continued)

6. Publication IPC-7351 may have alternate designs.
7. Solder mask tolerances between and around signal pads can vary based on board fabrication site.

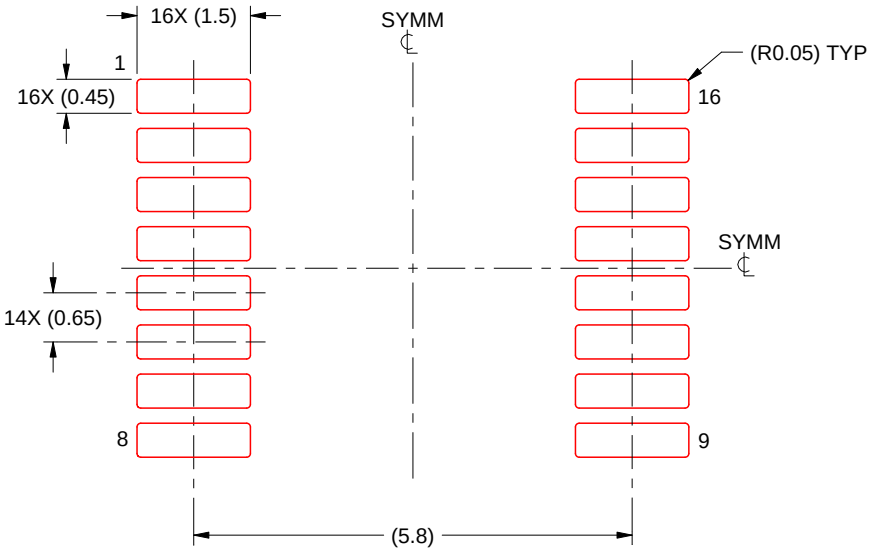

SOLDER PASTE EXAMPLE
BASED ON 0.125 mm THICK STENCIL
SCALE: 10X

4220204/B 12/2023

NOTES: (continued)

8. Laser cutting apertures with trapezoidal walls and rounded corners may offer better paste release. IPC-7525 may have alternate design recommendations.
9. Board assembly site may have different recommendations for stencil design.

重要なお知らせと免責事項

TI は、技術データと信頼性データ (データシートを含みます)、設計リソース (リファレンス デザインを含みます)、アプリケーションや設計に関する各種アドバイス、Web ツール、安全性情報、その他のリソースを、欠陥が存在する可能性のある「現状のまま」提供しており、商品性および特定目的に対する適合性の黙示保証、第三者の知的財産権の非侵害保証を含むいかなる保証も、明示的または黙示的にかかわらず拒否します。

これらのリソースは、TI 製品を使用する設計の経験を積んだ開発者への提供を意図したものです。(1) お客様のアプリケーションに適した TI 製品の選定、(2) お客様のアプリケーションの設計、検証、試験、(3) お客様のアプリケーションに該当する各種規格や、その他のあらゆる安全性、セキュリティ、規制、または他の要件への確実な適合に関する責任を、お客様のみが単独で負うものとします。

上記の各種リソースは、予告なく変更される可能性があります。これらのリソースは、リソースで説明されている TI 製品を使用するアプリケーションの開発の目的でのみ、TI はその使用をお客様に許諾します。これらのリソースに関して、他の目的で複製することや掲載することは禁止されています。TI や第三者の知的財産権のライセンスが付与されている訳ではありません。お客様は、これらのリソースを自身で使用した結果発生するあらゆる申し立て、損害、費用、損失、責任について、TI およびその代理人を完全に補償するものとし、TI は一切の責任を拒否します。

TI の製品は、 TI の販売条件 、 TI の総合的な品質ガイドライン 、 ti.com または TI 製品などに関連して提供される他の適用条件に従い提供されます。TI がこれらのリソースを提供することは、適用される TI の保証または他の保証の放棄の拡大や変更を意味するものではありません。 TI がカスタム、またはカスタマー仕様として明示的に指定していない限り、TI の製品は標準的なカタログに掲載される汎用機器です。

お客様がいかなる追加条項または代替条項を提案する場合も、TI はそれらに異議を唱え、拒否します。

Copyright © 2026, Texas Instruments Incorporated

最終更新日：2025 年 10 月