TCA9546A 低電圧、4 チャネル、リセット機能搭載 I²C および SMBus スイッチ

1 特長

- 1 対 4 の双方向変換スイッチ
- I²C バスおよび SMBus 互換
- アクティブ LOW のリセット入力
- 3 本のアドレス・ピンにより、最大 8 個の TCA9546A を I²C バスに接続可能
- I²C バス経由で、任意の組み合わせのチャネルを選択可能
- 電源オン時は、すべてのスイッチ・チャネルが選択解除された状態
- 低い R_{ON} のスイッチ
- 1.8V、2.5V、3.3V、5V の各電圧のバス間での電圧レベル変換
- 電源オン時のグリッチなし
- 活線挿抜をサポート
- 小さいスタンバイ電流
- 1.65V～5.5V の動作電源電圧範囲
- 5.5V 許容の入力
- 0～400kHz のクロック周波数
- JESD 78 準拠で 100mA 超のラッチアップ性能
- JESD 22 を超える ESD 保護
  - 4000V、人体モデル (A114-A)
  - 1500V、デバイス帯電モデル (C101)

2 アプリケーション

- サーバー
- ルーター (テレコム・スイッチング機器)
- ファクトリ・オートメーション
- I²C スレーブ・アドレス競合がある製品 (複数の同一温度センサなど)

3 概要

TCA9546A は、I²C バスで制御するクワッド双方向変換スイッチです。SCL/SDA のアップストリーム・ペアが、4 つのダウンストリーム・ペア (チャネル) にファンアウトされます。プログラム可能な制御レジスタの設定により、どのような個別の SCn/SDn チャネルでも、チャネルの組み合わせでも選択できます。

アクティブ LOW のリセット入力 ($\overline{RESET}$) により、TCA9546A はダウンストリームの I²C バスの 1 つが LOW 状態に固着した状況から回復できます。$\overline{RESET}$ を LOW にすると、I²C ステート・マシンがリセットされ、すべてのチャネルが選択解除されます (内部のパワー・オン・リセット機能と同様)。

製品情報(1)

型番	パッケージ	本体サイズ(公称)
TCA9546A	TSSOP (16)	5.00mm×4.40mm
	SOIC (16)	9.90mm×3.91mm

(1) 提供されているすべてのパッケージについては、巻末の注文情報を参照してください。

アプリケーション概略図

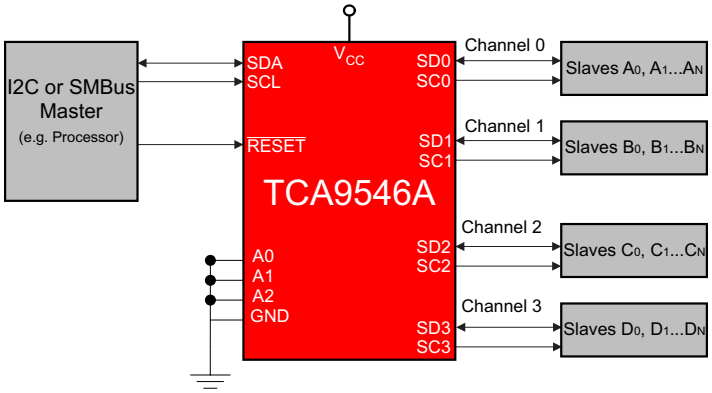

英語版のTI製品についての情報を翻訳したこの資料は、製品の概要を確認する目的で便宜的に提供しているものです。該当する正式な英語版の最新情報は、www.ti.comで閲覧でき、その内容が常に優先されます。TIでは翻訳の正確性および妥当性につきましては一切保証いたしません。実際の設計などの前には、必ず最新版の英語版をご参照くださいますようお願いいたします。

目次

1 特長 ... 1
2 アプリケーション ... 1
3 概要 ... 1
4 改訂履歴 ... 2
5 概要（続き） ... 3
6 **Pin Configuration and Functions** ... 4
7 **Specifications** ... 5
7.1 Absolute Maximum Ratings ... 5
7.2 ESD Ratings ... 5
7.3 Recommended Operating Conditions ... 5
7.4 Thermal Information ... 5
7.5 Electrical Characteristics ... 6
7.6 I^2C Interface Timing Requirements ... 7
7.7 Switching Characteristics ... 7
7.8 Interrupt and Reset Timing Requirements ... 8
7.9 Typical Characteristics ... 8
8 **Parameter Measurement Information** ... 9
9 **Detailed Description** ... 11
9.1 Overview ... 11
9.2 Functional Block Diagram ... 11
9.3 Feature Description ... 12
9.4 Device Functional Modes ... 12
9.5 Programming ... 12
9.6 Control Register ... 15
10 **Application and Implementation** ... 17
10.1 Application Information ... 17
10.2 Typical Application ... 17
11 **Power Supply Recommendations** ... 20
11.1 Power-On Reset Requirements ... 20
12 **Layout** ... 22
12.1 Layout Guidelines ... 22
12.2 Layout Example ... 22
13 デバイスおよびドキュメントのサポート ... 23
13.1 ドキュメントの更新通知を受け取る方法 ... 23
13.2 サポート・リソース ... 23
13.3 商標 ... 23
13.4 静電気放電に関する注意事項 ... 23
13.5 Glossary ... 23
14 メカニカル、パッケージ、および注文情報 ... 23

4 改訂履歴

Revision A (February 2015) から Revision B に変更 **Page**

- Changed the Pin Configuration image appearance ... 4
- Changed V_{CC} = 3.3 V to V_{CC} = 2.5 V in Figure 15 ... 17

Copyright © 2014–2019, Texas Instruments Incorporated

5 概要（続き）

スイッチのパス・ゲートは、TCA9546A が出力する最大 HIGH 電圧を VCC ピンで制限できるように構成されています。これにより、ペアごとに異なるバス電圧を使用できるため、追加保護の必要なしに 1.8V、2.5V、3.3V のデバイスが 5V のデバイスと通信できます。外付けのプルアップ抵抗により、各チャネルに求められる電圧レベルにバスをプルアップします。すべての I/O ピンは 5.5V 許容です。

2014年4月発行のものから更新 **Page**

- データシートに D パッケージを 追加 1
- Changed Handling Ratings table to ESD Ratings. 5
- Added D package to the Thermal Information table. 5

6 Pin Configuration and Functions

D or PW Package
TSSOP and SOIC 16 Pins
Top View

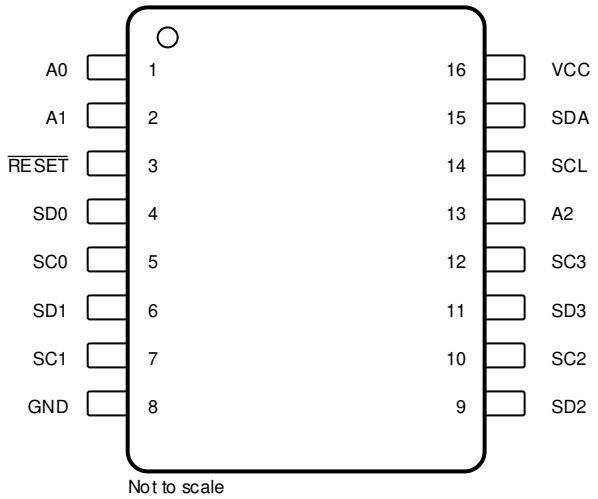

Pin Functions

PIN		DESCRIPTION
NAME	NO.	
A0	1	Address input 0. Connect directly to V_{CC} or ground.
A1	2	Address input 1. Connect directly to V_{CC} or ground.
$\overline{RESET}$	3	Active low reset input. Connect to V_{CC} or V_{DPUM} (1) through a pull-up resistor, if not used.
SD0	4	Serial data 0. Connect to V_{DPU0} (1) through a pull-up resistor.
SC0	5	Serial clock 0. Connect to V_{DPU0} (1) through a pull-up resistor.
SD1	6	Serial data 1. Connect to V_{DPU1} (1) through a pull-up resistor.
SC1	7	Serial clock 1. Connect to V_{DPU1} (1) through a pull-up resistor.
GND	8	Ground
SD2	9	Serial data 2. Connect to V_{DPU2} (1) through a pull-up resistor.
SC2	10	Serial clock 2. Connect to V_{DPU2} (1) through a pull-up resistor.
SD3	11	Serial data 3. Connect to V_{DPU3} (1) through a pull-up resistor.
SC3	12	Serial clock 3. Connect to V_{DPU3} (1) through a pull-up resistor.
A2	13	Address input 2. Connect directly to V_{CC} or ground.
SCL	14	Serial clock line. Connect to V_{DPUM} (1) through a pull-up resistor.
SDA	15	Serial data line. Connect to V_{DPUM} (1) through a pull-up resistor.
VCC	16	Supply power

(1) V_{DPUX} is the pull-up reference voltage for the associated data line. V_{DPUM} is the master I^2C master reference voltage and V_{DPU0}-V_{DPU3} are the slave channel reference voltages.

Copyright © 2014–2019, Texas Instruments Incorporated

7 Specifications

7.1 Absolute Maximum Ratings[1]

over operating free-air temperature range (unless otherwise noted)

		MIN	MAX	UNIT
V_{CC}	Supply voltage range	–0.5	7	V
V_I	Input voltage range[2]	–0.5	7	V
I_I	Input current		±20	mA
I_O	Output current		±25	mA
	Continuous current through V_{CC}		±100	mA
	Continuous current through GND		±100	mA
P_{tot}	Total power dissipation		400	mW
T_A	Operating free-air temperature range	–40	85	°C
T_{stg}	Storage temperature range	-65	150	°C

(1) Stresses beyond those listed under "absolute maximum ratings" may cause permanent damage to the device. These are stress ratings only, and functional operation of the device at these or any other conditions beyond those indicated under "recommended operating conditions" is not implied. Exposure to absolute-maximum-rated conditions for extended periods may affect device reliability.
(2) The input negative-voltage and output voltage ratings may be exceeded if the input and output current ratings are observed.

7.2 ESD Ratings

			VALUE	UNIT
$V_{(ESD)}$	Electrostatic discharge	Human-body model (HBM), per ANSI/ESDA/JEDEC JS-001[1]	±4000	V
		Charged-device model (CDM), per JEDEC specification JESD22-C101[2]	±1500	

(1) JEDEC document JEP155 states that 500-V HBM allows safe manufacturing with a standard ESD control process. Manufacturing with less than 500-V HBM is possible with the necessary precautions.
(2) JEDEC document JEP157 states that 250-V CDM allows safe manufacturing with a standard ESD control process. Manufacturing with less than 250-V CDM is possible with the necessary precautions.

7.3 Recommended Operating Conditions[1]

			MIN	MAX	UNIT
V_{CC}	Supply voltage		1.65	5.5	V
V_{IH}	High-level input voltage	SCL, SDA	0.7 × V_{CC}	6	V
		A2–A0, $\overline{RESET}$	0.7 × V_{CC}	V_{CC} + 0.5	
V_{IL}	Low-level input voltage	SCL, SDA	–0.5	0.3 × V_{CC}	V
		A2–A0, $\overline{RESET}$	–0.5	0.3 × V_{CC}	
T_A	Operating free-air temperature		–40	85	°C

(1) All unused inputs of the device must be held at V_{CC} or GND to ensure proper device operation. Refer to the TI application report, *Implications of Slow or Floating CMOS Inputs*, literature number SCBA004.

7.4 Thermal Information

THERMAL METRIC[1]		TCA9546A		UNIT
		D	PW	
		16 PINS	16 PINS	
$R_{\theta JA}$	Junction-to-ambient thermal resistance	92.3	122.3	°C/W
$R_{\theta JCtop}$	Junction-to-case (top) thermal resistance	52.3	56.6	
$R_{\theta JB}$	Junction-to-board thermal resistance	50.1	57.4	
ψ_{JT}	Junction-to-top characterization parameter	17.7	10.9	
ψ_{JB}	Junction-to-board characterization parameter	49.8	66.8	

(1) For more information about traditional and new thermal metrics, see the *Semiconductor and IC Package Thermal Metrics* application report.

Copyright © 2014–2019, Texas Instruments Incorporated

7.5 Electrical Characteristics[1]

over recommended operating free-air temperature range (unless otherwise noted)

PARAMETER			TEST CONDITIONS		V_{CC}	MIN	TYP[2]	MAX	UNIT
V_{PORR}	Power-on reset voltage, V_{CC} rising		No load,	$V_I = V_{CC}$ or GND[3]			1.2	1.5	V
V_{PORF}	Power-on reset voltage, V_{CC} falling[4]		No load,	$V_I = V_{CC}$ or GND[3]		0.8	1		
V_{pass}	Switch output voltage		$V_{SWin} = V_{CC}$,	$I_{SWout} = -100\ \mu A$	5 V		3.6		V
					4.5 V to 5.5 V	2.6		4.5	
					3.3 V		1.9		
					3 V to 3.6 V	1.6		2.8	
					2.5 V		1.4		
					2.3 V to 2.7 V	1.0		1.8	
					1.8 V		0.8		
					1.65 V to 1.95 V	0.5		1.1	
I_{OL}	SDA		$V_{OL} = 0.4$ V		1.65 V to 5.5 V	3	7		mA
			$V_{OL} = 0.6$ V			6	10		
I_I	SCL, SDA		$V_I = V_{CC}$ or GND[3]		1.65 V to 5.5 V			±1	µA
	SC3–SC0, SD3–SD0							±1	
	A2–A0							±1	
	$\overline{RESET}$							±1	
I_{CC}	Operating mode	f_{SCL} = 400 kHz	$V_I = V_{CC}$ or GND[3] $I_O = 0$ $t_{r,max}$ = 300 ns		5.5 V		50		µA
					3.6 V		20		
					2.7 V		11		
					1.65 V		6		
		f_{SCL} = 100 kHz	$V_I = V_{CC}$ or GND[3] $I_O = 0$ $t_{r,max}$ = 1 µs		5.5 V		35		
					3.6 V		14		
					2.7 V		5		
					1.65 V		2		
	Standby mode	Low inputs	V_I = GND[3] $I_O = 0$		5.5 V		1.6	2	
					3.6 V		1.0	1.3	
					2.7 V		0.7	1.1	
					1.65 V		0.4	0.55	
		High inputs	$V_I = V_{CC}$ $I_O = 0$		5.5 V		1.6	2	
					3.6 V		1.0	1.3	
					2.7 V		0.7	1.1	
					1.65 V		0.4	0.55	
ΔI_{CC}	Supply-current change	SCL, SDA	SCL or SDA input at 0.6 V, Other inputs at V_{CC} or GND[3]		1.65 V to 5.5 V		2	15	µA
			SCL or SDA input at V_{CC} – 0.6 V, Other inputs at V_{CC} or GND[3]		1.65 V to 5.5 V		2	15	
C_i	A2–A0		$V_I = V_{CC}$ or GND[3]		1.65 V to 5.5 V		4.5	6	pF
	$\overline{RESET}$						4.5	5.5	
$C_{io(OFF)}$[5]	SCL, SDA		$V_I = V_{CC}$ or GND[3]	Switch OFF	1.65 V to 5.5 V		15	19	pF
	SC3–SC0, SD3–SD0						6	8	

(1) For operation between specified voltage ranges, refer to the worst-case parameter in both applicable ranges.
(2) All typical values are at nominal supply voltage (1.8-V, 2.5-V, 3.3-V, or 5-V V_{CC}), T_A = 25°C.
(3) $\overline{RESET}$ = V_{CC} (held high) when all other input voltages, V_I = GND.
(4) The power-on reset circuit resets the I^2C bus logic with $V_{CC} < V_{PORF}$.
(5) $C_{io(ON)}$ depends on internal capacitance and external capacitance added to the SCn lines when channels(s) are ON.

Copyright © 2014–2019, Texas Instruments Incorporated

Electrical Characteristics[1] (continued)

over recommended operating free-air temperature range (unless otherwise noted)

PARAMETER		TEST CONDITIONS		V_{CC}	MIN	TYP[2]	MAX	UNIT
R_{ON}	Switch on-state resistance	V_O = 0.4 V	I_O = 15 mA	4.5 V to 5.5 V	4	10	16	Ω
				3 V to 3.6 V	5	13	20	
		V_O = 0.4 V	I_O = 10 mA	2.3 V to 2.7 V	7	16	45	
				1.65 V to 1.95 V	10	25	70	

7.6 I²C Interface Timing Requirements

over recommended operating free-air temperature range (unless otherwise noted) (see Figure 5)

			STANDARD MODE I²C BUS		FAST MODE I²C BUS		UNIT
			MIN	MAX	MIN	MAX	
f_{scl}	I²C clock frequency		0	100	0	400	kHz
t_{sch}	I²C clock high time		4		0.6		µs
t_{scl}	I²C clock low time		4.7		1.3		µs
t_{sp}	I²C spike time			50		50	ns
t_{sds}	I²C serial-data setup time		250		100		ns
t_{sdh}	I²C serial-data hold time		0[1]		0[1]		µs
t_{icr}	I²C input rise time			1000	$20 + 0.1C_b$ [2]	300	ns
t_{icf}	I²C input fall time			300	$20 + 0.1C_b$ [2]	300	ns
t_{ocf}	I²C output fall time	10-pF to 400-pF bus		300	$20 + 0.1C_b$ [2]	300	ns
t_{buf}	I²C bus free time between stop and start		4.7		1.3		µs
t_{sts}	I²C start or repeated start condition setup		4.7		0.6		µs
t_{sth}	I²C start or repeated start condition hold		4		0.6		µs
t_{sps}	I²C stop condition setup		4		0.6		µs
$t_{vdL(Data)}$	Valid-data time (high to low)[3]	SCL low to SDA output low valid		1		1	µs
$t_{vdH(Data)}$	Valid-data time (low to high)[3]	SCL low to SDA output high valid		0.6		0.6	µs
$t_{vd(ack)}$	Valid-data time of ACK condition	ACK signal from SCL low to SDA output low		1		1	µs
C_b	I²C bus capacitive load			400		400	pF

(1) A device internally must provide a hold time of at least 300 ns for the SDA signal (referred to the V_{IH} min of the SCL signal), in order to bridge the undefined region of the falling edge of SCL.
(2) C_b = total bus capacitance of one bus line in pF
(3) Data taken using a 1-kΩ pullup resistor and 50-pF load (see Figure 5)

7.7 Switching Characteristics

over recommended operating free-air temperature range, C_L ≤ 100 pF (unless otherwise noted) (see Figure 5)

PARAMETER			FROM (INPUT)	TO (OUTPUT)	MIN	MAX	UNIT
t_{pd} [1]	Propagation delay time	R_{ON} = 20 Ω, C_L = 15 pF	SDA or SCL	SDn or SCn		0.3	ns
		R_{ON} = 20 Ω, C_L = 50 pF				1	

(1) The propagation delay is the calculated RC time constant of the typical ON-state resistance of the switch and the specified load capacitance, when driven by an ideal voltage source (zero output impedance).

Copyright © 2014–2019, Texas Instruments Incorporated

7.8 Interrupt and Reset Timing Requirements

over recommended operating free-air temperature range (unless otherwise noted)

PARAMETER		MIN	MAX	UNIT
t_{WL}	Pulse duration, $\overline{RESET}$ low	6		ns
t_{rst} (1)	$\overline{RESET}$ time (SDA clear)		500	ns
$t_{REC(STA)}$	Recovery time from $\overline{RESET}$ to start	0		ns

(1) t_{rst} is the propagation delay measured from the time the $\overline{RESET}$ pin is first asserted low to the time the SDA pin is asserted high, signaling a stop condition. It must be a minimum of t_{WL}.

7.9 Typical Characteristics

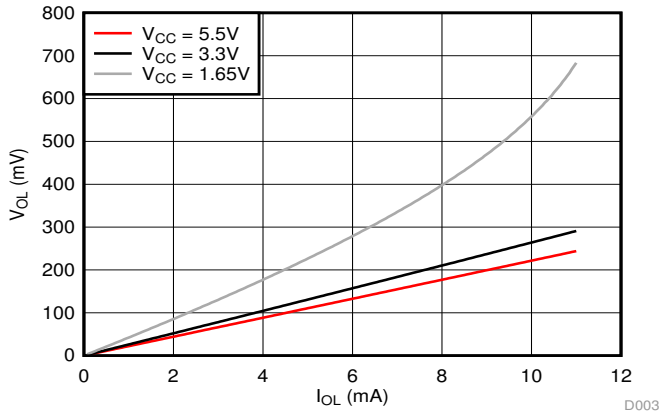

Figure 1. SDA Output Low Voltage (V_{OL}) vs Load Current (I_{OL}) at Three V_{CC} Levels

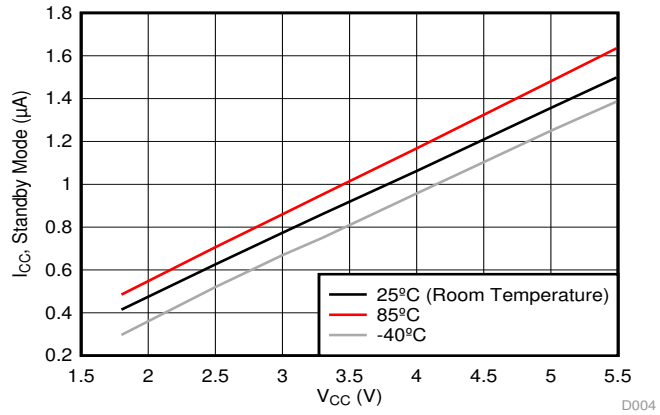

Figure 2. Standby Current (I_{CC}) vs Supply Voltage (V_{CC}) at Three Temperature Points

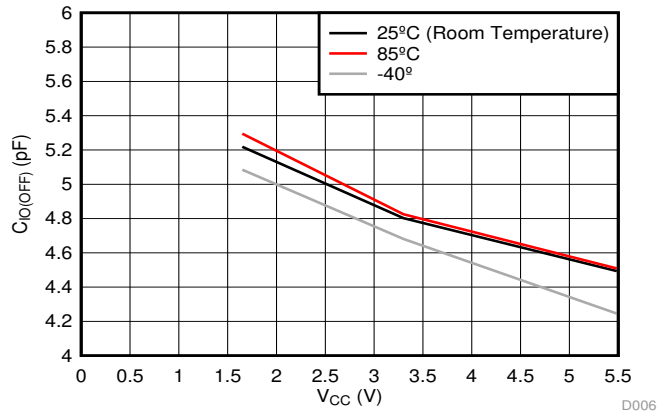

Figure 3. Slave channel (SCn/SDn) capacitance ($C_{io(OFF)}$) vs. Supply Voltage (V_{CC}) at Three Temperature Points

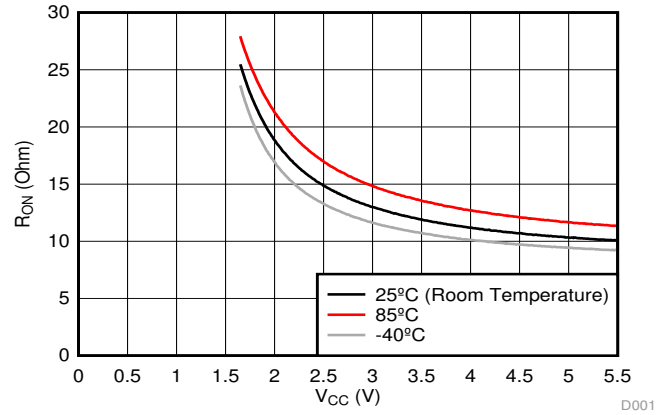

Figure 4. ON-Resistance (R_{ON}) vs Supply Voltage (V_{CC}) at Three Temperatures

Copyright © 2014–2019, Texas Instruments Incorporated

8 Parameter Measurement Information

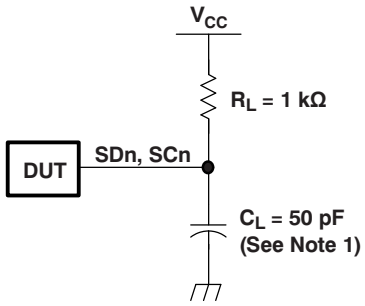

Copyright © 2016, Texas Instruments Incorporated

I²C PORT LOAD CONFIGURATION

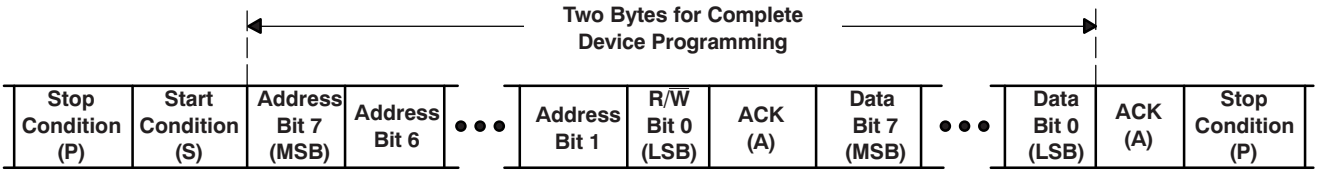

BYTE	DESCRIPTION
1	I²C address + R/W
2	Control register data

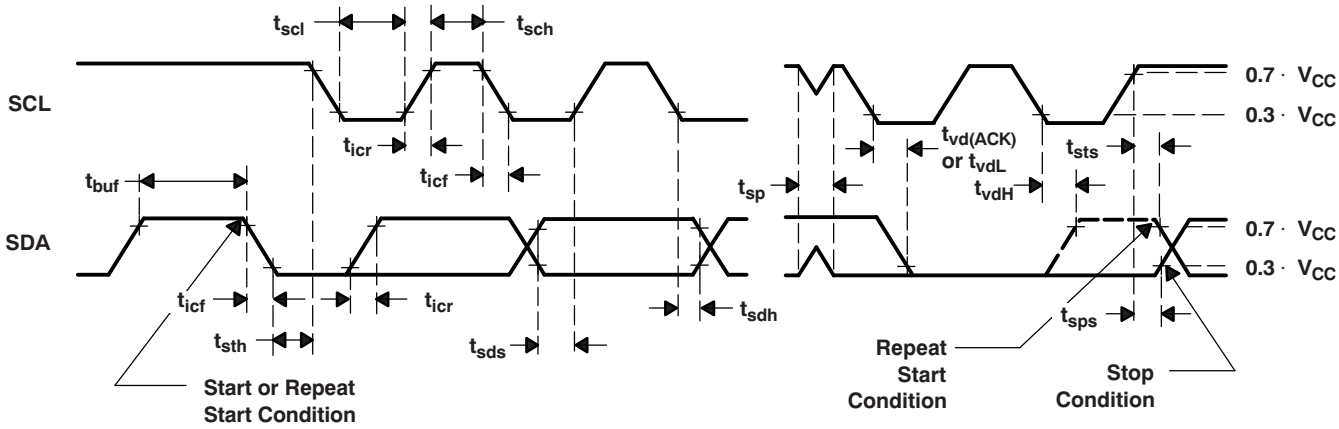

VOLTAGE WAVEFORMS

A. C_L includes probe and jig capacitance.

B. All input pulses are supplied by generators having the following characteristics: PRR ≤ 10 MHz, Z_O = 50 Ω, t_r/t_f ≤ 30 ns.

C. The outputs are measured one at a time, with one transition per measurement.

Figure 5. I²C Interface Load Circuit, Byte Descriptions, and Voltage Waveforms

Parameter Measurement Information (continued)

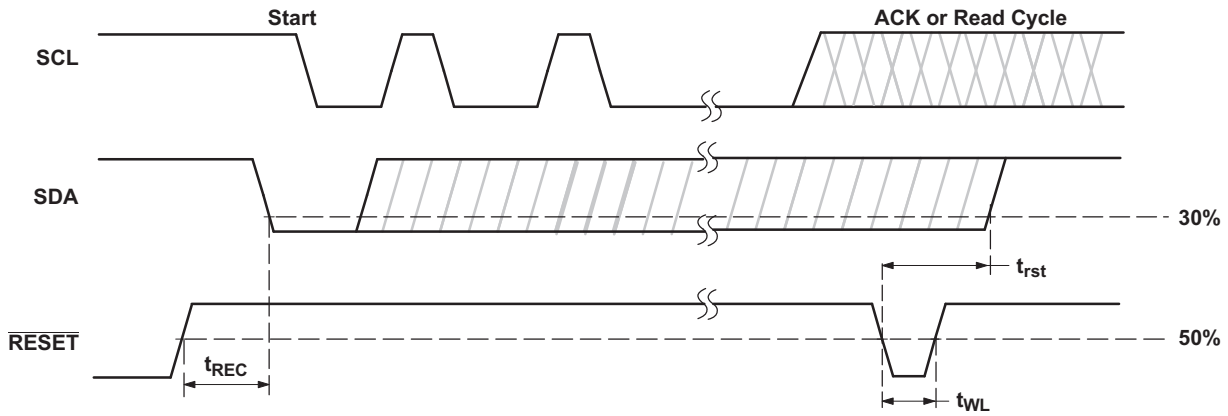

Figure 6. Reset Timing

Copyright © 2014–2019, Texas Instruments Incorporated

9 Detailed Description

9.1 Overview

The TCA9546A is a 4-channel, bidirectional translating I^{2}C switch. The master SCL/SDA signal pair is directed to four channels of slave devices, SC0/SD0-SC3/SD3. Any individual downstream channel can be selected as well as any combination of the four channels.

The device offers an active-low $\overline{\text{RESET}}$ input which resets the state machine and allows the TCA9546A to recover should one of the downstream I^{2}C buses get stuck in a low state. The state machine of the device can also be reset by cycling the power supply, V_{CC}, also known as a power-on reset (POR). Both the $\overline{\text{RESET}}$ function and a POR will cause all channels to be deselected.

The connections of the I^{2}C data path are controlled by the same I^{2}C master device that is switched to communicate with multiple I^{2}C slaves. After the successful acknowledgment of the slave address (hardware selectable by A0 and A1 pins), a single 8-bit control register is written to or read from to determine the selected channels.

The TCA9546A may also be used for voltage translation, allowing the use of different bus voltages on each SCn/SDn pair such that 1.8-V, 2.5-V, or 3.3-V parts can communicate with 5-V parts. This is achieved by using external pull-up resistors to pull the bus up to the desired voltage for the master and each slave channel.

9.2 Functional Block Diagram

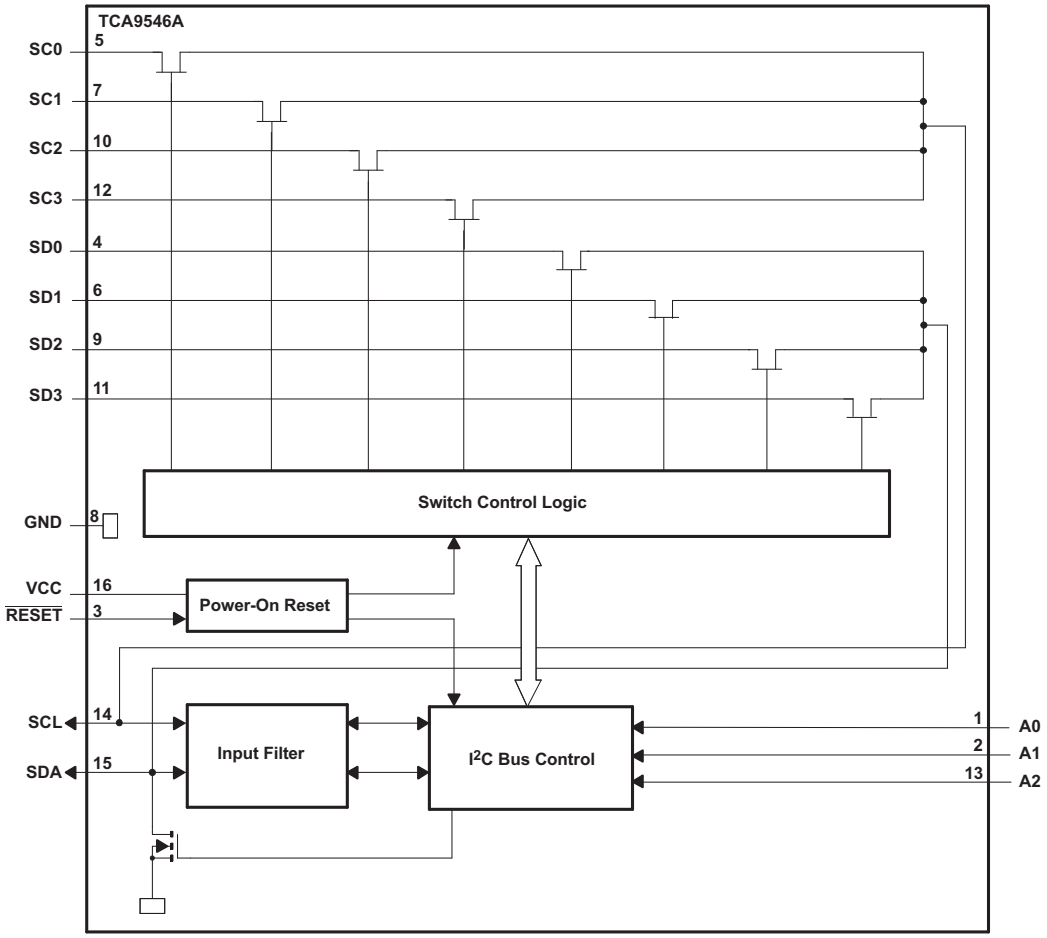

9.3 Feature Description

The TCA9546A is a 4-channel, bidirectional translating switch for I^2C buses that supports Standard-Mode (100 kHz) and Fast-Mode (400 kHz) operation. The TCA9546A features I^2C control using a single 8-bit control register in which the four least significant bits control the enabling and disabling of the 4 switch channels of I^2C data flow. Depending on the application, voltage translation of the I^2C bus can also be achieved using the TCA9546A to allow 1.8-V, 2.5-V, or 3.3-V parts to communicate with 5-V parts. Additionally, in the event that communication on the I^2C bus enters a fault state, the TCA9546A can be reset to resume normal operation using the $\overline{RESET}$ pin feature or by a power-on reset which results from cycling power to the device.

9.4 Device Functional Modes

9.4.1 $\overline{RESET}$ Input

The $\overline{RESET}$ input is an active-low signal that may be used to recover from a bus-fault condition. When this signal is asserted low for a minimum of t_{WL}, the TCA9546A resets its registers and I^2C state machine and deselects all channels. The $\overline{RESET}$ input must be connected to V_{CC} through a pull-up resistor.

9.4.2 Power-On Reset

When power is applied to V_{CC}, an internal power-on reset holds the TCA9546A in a reset condition until V_{CC} has reached V_{POR}. At this point, the reset condition is released, and the TCA9546A registers and I^2C state machine are initialized to their default states, all zeroes, causing all the channels to be deselected. Thereafter, V_{CC} must be lowered below V_{POR} to reset the device.

9.5 Programming

9.5.1 I^2C Interface

The I^2C bus is for two-way two-line communication between different ICs or modules. The two lines are a serial data line (SDA) and a serial clock line (SCL). Both lines must be connected to a positive supply via a pullup resistor when connected to the output stages of a device. Data transfer can be initiated only when the bus is not busy.

One data bit is transferred during each clock pulse. The data on the SDA line must remain stable during the high period of the clock pulse, as changes in the data line at this time are interpreted as control signals (see Figure 7).

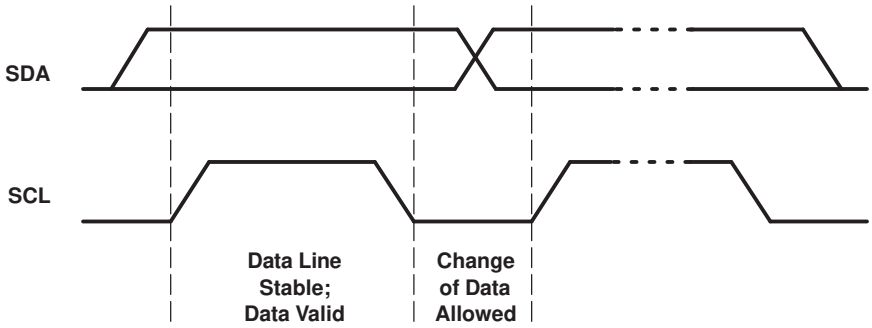

Figure 7. Bit Transfer

Both data and clock lines remain high when the bus is not busy. A high-to-low transition of the data line while the clock is high is defined as the start condition (S). A low-to-high transition of the data line while the clock is high is defined as the stop condition (P) (see Figure 8).

Copyright © 2014–2019, Texas Instruments Incorporated

Programming (continued)

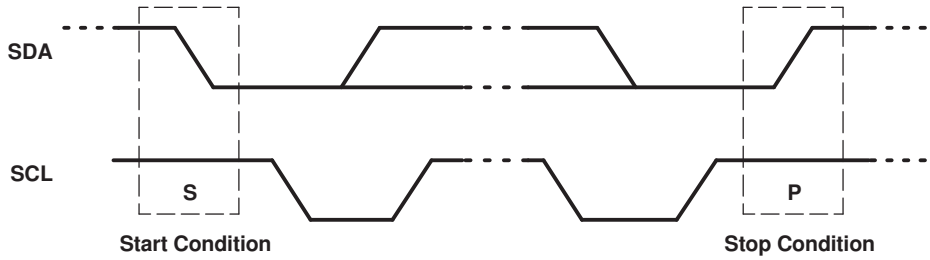

Figure 8. Definition of Start and Stop Conditions

A device generating a message is a transmitter; a device receiving is the receiver. The device that controls the message is the master, and the devices that are controlled by the master are the slaves (see Figure 9).

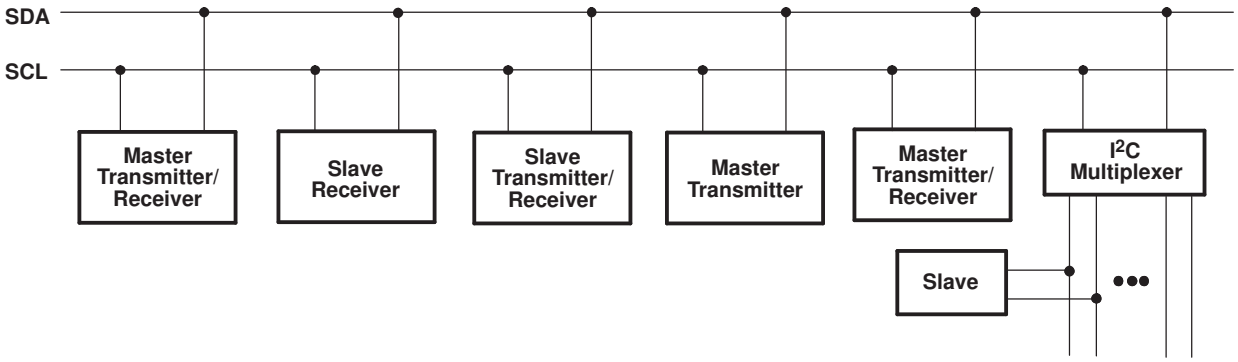

Figure 9. System Configuration

The number of data bytes transferred between the start and the stop conditions from transmitter to receiver is not limited. Each byte of eight bits is followed by one acknowledge (ACK) bit. The transmitter must release the SDA line before the receiver can send an ACK bit.

When a slave receiver is addressed, it must generate an ACK after the reception of each byte. Also, a master must generate an ACK after the reception of each byte that has been clocked out of the slave transmitter. The device that acknowledges must pull down the SDA line during the ACK clock pulse so that the SDA line is stable low during the high pulse of the ACK-related clock period (see Figure 10). Setup and hold times must be taken into account.

Copyright © 2014–2019, Texas Instruments Incorporated

Programming (continued)

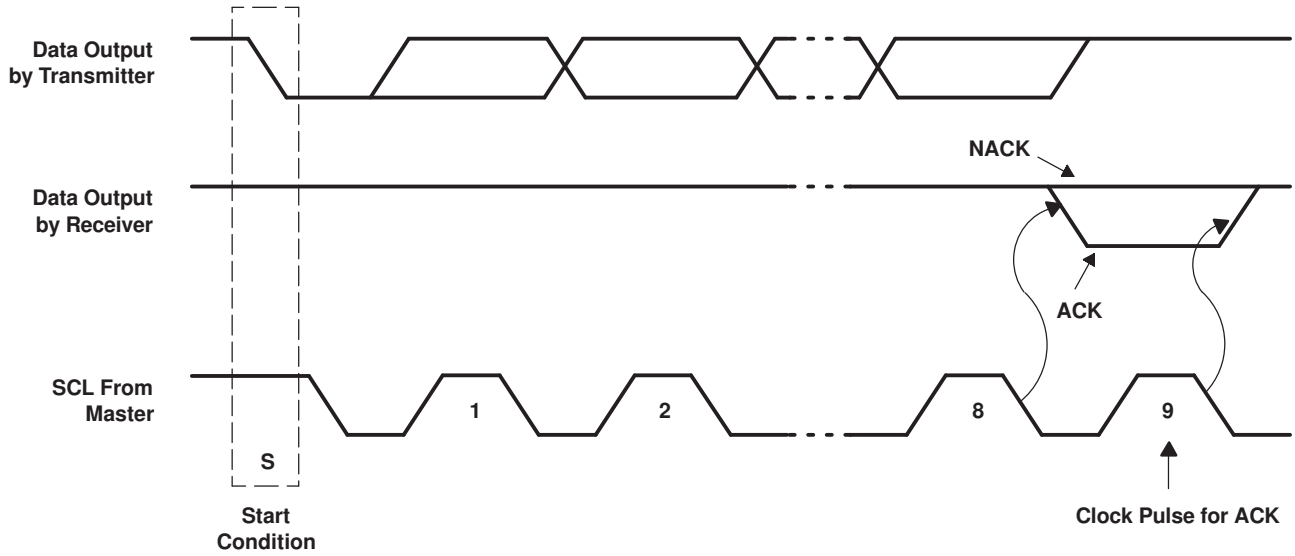

Figure 10. Acknowledgment on the I²C Bus

Data is transmitted to the TCA9546A control register using the write mode shown in Figure 11.

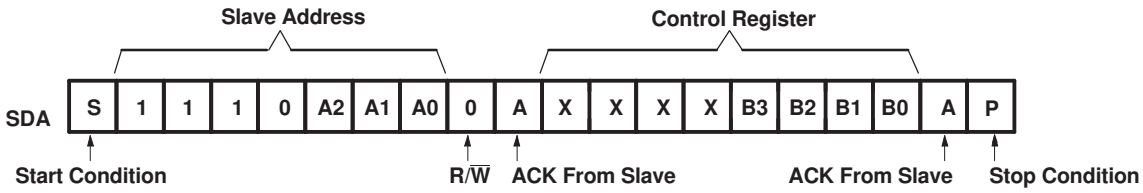

Figure 11. Write Control Register

Data is read from the TCA9546A control register using the read mode shown in Figure 12.

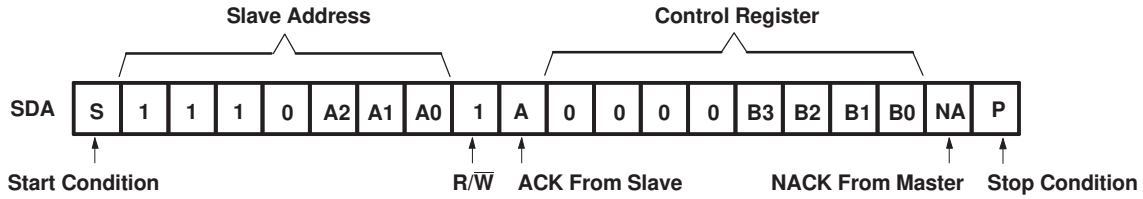

Figure 12. Read Control Register

Copyright © 2014–2019, Texas Instruments Incorporated

9.6 Control Register

9.6.1 Device Address

Following a start condition, the bus master must output the address of the slave it is accessing. The address of the TCA9546A is shown in Figure 13. To conserve power, no internal pullup resistors are incorporated on the hardware-selectable address pins, and they must be pulled high or low.

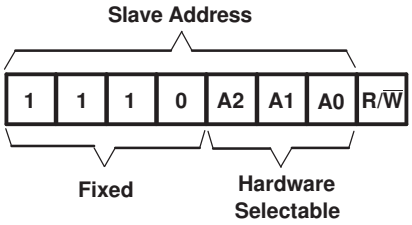

Figure 13. TCA9546A Address

The last bit of the slave address defines the operation to be performed. When set to a logic 1, a read is selected, while a logic 0 selects a write operation.

9.6.2 Control Register Description

Following the successful acknowledgment of the slave address, the bus master sends a byte to the TCA9546A, which is stored in the control register (see Figure 14). If multiple bytes are received by the TCA9546A, it will save the last byte received. This register can be written and read via the I^2C bus.

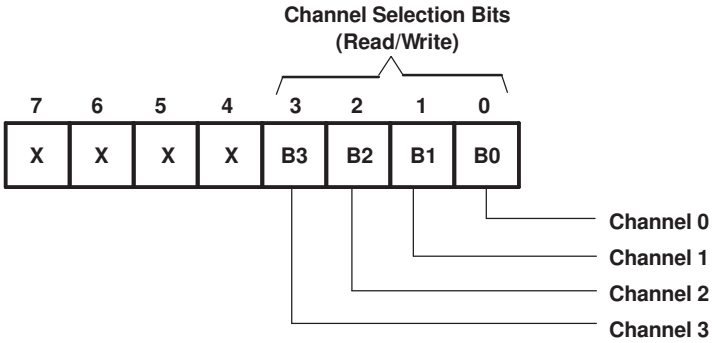

Figure 14. Control Register

9.6.3 Control Register Definition

One or several SCn/SDn downstream pairs, or channels, are selected by the contents of the control register (see Table 1). This register is written after the TCA9546A has been addressed. The four LSBs of the control byte are used to determine which channel or channels are to be selected. When a channel is selected, the channel becomes active after a stop condition has been placed on the I^2C bus. This ensures that all SCn/SDn lines are in a high state when the channel is made active, so that no false conditions are generated at the time of connection. A stop condition always must occur right after the acknowledge cycle.

Copyright © 2014–2019, Texas Instruments Incorporated

Control Register (continued)

Table 1. Control Register Write (Channel Selection), Control Register Read (Channel Status)(1)

B7	B6	B5	B4	B3	B2	B1	B0	COMMAND
X	X	X	X	X	X	X	0	Channel 0 disabled
							1	Channel 0 enabled
X	X	X	X	X	X	0	X	Channel 1 disabled
						1		Channel 1 enabled
X	X	X	X	X	0	X	X	Channel 2 disabled
					1			Channel 2 enabled
X	X	X	X	0	X	X	X	Channel 3 disabled
				1				Channel 3 enabled
0	0	0	0	0	0	0	0	No channel selected, power-up/reset default state

(1) Several channels can be enabled at the same time. For example, B3 =0, B2 = 1, B1 = 1, B0 = 0 means that channels 0 and 3 are disabled, and channels 1 and 2 are enabled. Care should be taken not to exceed the maximum bus capacity.

Copyright © 2014–2019, Texas Instruments Incorporated

10 Application and Implementation

10.1 Application Information

Applications of the TCA9546A contains an I²C (or SMBus) master device and up to four I²C slave devices. The downstream channels are ideally used to resolve I²C slave address conflicts. For example, if four identical digital temperature sensors are needed in the application, one sensor can be connected at each channel: 0, 1, 2, and 3. When the temperature at a specific location needs to be read, the appropriate channel can be enabled and all other channels switched off, the data can be retrieved, and the I²C master can move on and read the next channel.

In an application where the I²C bus contain many additional slave devices that do not result in I²C slave address conflicts, these slave devices can be connected to any desired channel to distribute the total bus capacitance across multiple channels. If multiple switches will be enabled simultaneously, additional design requirements must be considered (See Design Requirements and Detailed Design Procedure).

10.2 Typical Application

A typical application of the TCA9546A contains anywhere from 1 to 5 separate data pull-up voltages, V_{DPUX} , one for the master device (V_{DPUM}) and one for each of the selectable slave channels (V_{DPU0} – V_{DPU3}). In the event where the master device and all slave devices operate at the same voltage, then the pass voltage, $V_{pass} = V_{DPUX}$. Once the maximum V_{pass} is known, V_{cc} can be selected easily using Figure 16. In an application where voltage translation is necessary, additional design requirements must be considered (See Design Requirements).

Figure 15 shows an application in which the TCA9546A can be used.

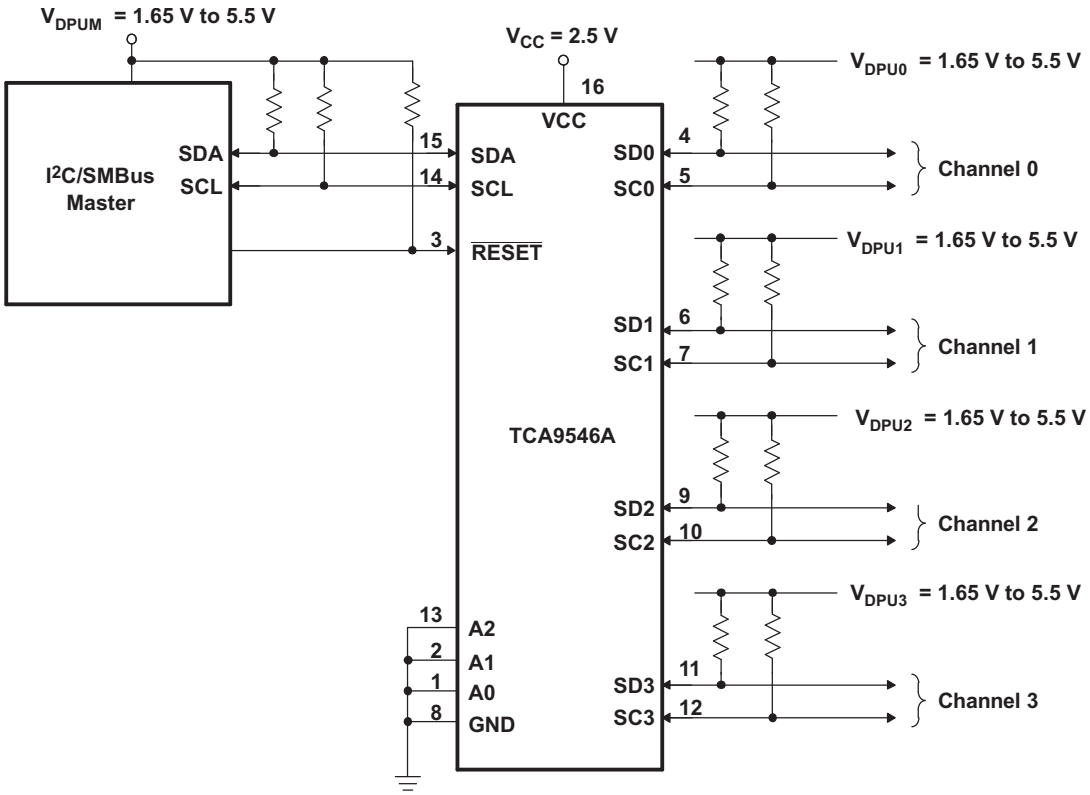

Figure 15. TCA9546A Typical Application Schematic

Typical Application (continued)

10.2.1 Design Requirements

The A0, A1, and A2 pins are hardware selectable to control the slave address of the TCA9546A. These pins may be tied directly to GND or V_{CC} in the application.

If multiple slave channels will be activated simultaneously in the application, then the total I_{OL} from SCL/SDA to GND on the master side will be the sum of the currents through all pull-up resistors, R_p.

The pass-gate transistors of the TCA9546A are constructed such that the V_{CC} voltage can be used to limit the maximum voltage that is passed from one I^2C bus to another.

Figure 16 shows the voltage characteristics of the pass-gate transistors (note that the graph was generated using data specified in the Electrical Characteristics section of this data sheet). In order for the TCA9546A to act as a voltage translator, the V_{pass} voltage must be equal to or lower than the lowest bus voltage. For example, if the main bus is running at 5 V and the downstream buses are 3.3 V and 2.7 V, V_{pass} must be equal to or below 2.7 V to effectively clamp the downstream bus voltages. As shown in Figure 16, $V_{pass(max)}$ is 2.7 V when the TCA9546A supply voltage is 4 V or lower, so the TCA9546A supply voltage could be set to 3.3 V. Pull-up resistors then can be used to bring the bus voltages to their appropriate levels (see Figure 15).

10.2.2 Detailed Design Procedure

Once all the slaves are assigned to the appropriate slave channels and bus voltages are identified, the pull-up resistors, R_p, for each of the buses need to be selected appropriately. The minimum pull-up resistance is a function of V_{DPUX}, $V_{OL,(max)}$, and I_{OL}:

$$R_{p(min)} = \frac{V_{DPUX} - V_{OL(max)}}{I_{OL}} \tag{1}$$

The maximum pull-up resistance is a function of the maximum rise time, t_r (300 ns for fast-mode operation, f_{SCL} = 400 kHz) and bus capacitance, C_b:

$$R_{p(max)} = \frac{t_r}{0.8473 \times C_b} \tag{2}$$

The maximum bus capacitance for an I^2C bus must not exceed 400 pF for fast-mode operation. The bus capacitance can be approximated by adding the capacitance of the TCA9546A, $C_{io(OFF)}$, the capacitance of wires/connections/traces, and the capacitance of each individual slave on a given channel. If multiple channels will be activated simultaneously, each of the slaves on all channels will contribute to total bus capacitance.

Copyright © 2014–2019, Texas Instruments Incorporated

Typical Application (continued)

10.2.3 TCA9546A Application Curves

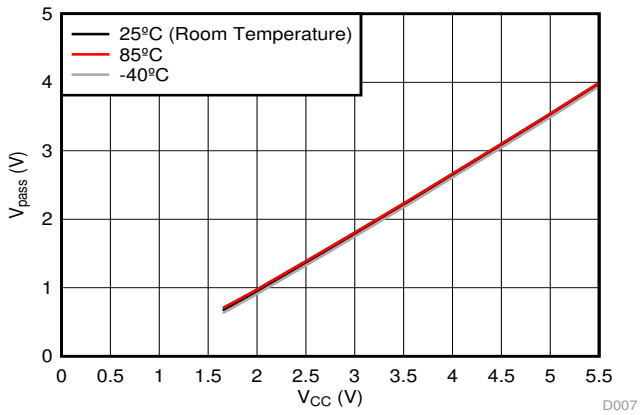

Figure 16. Pass-Gate Voltage (V_{pass}) vs Supply Voltage (V_{CC}) at Three Temperature Points

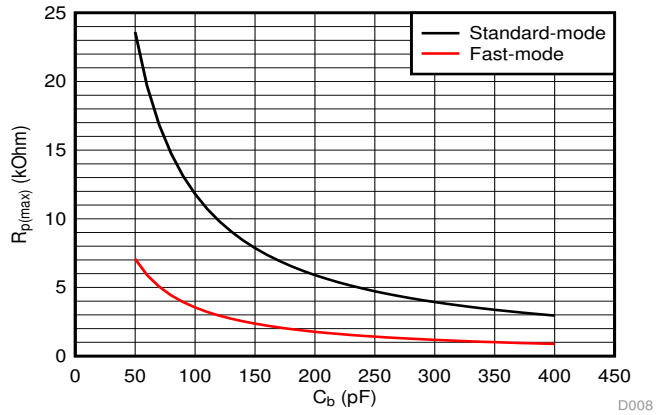

Standard-mode (f_{SCL}= 100 kHz, t_r = 1 µs)

Fast-mode (f_{SCL}= 400 kHz, t_r= 300 ns)

Figure 17. Maximum Pull-Up resistance ($R_{p(max)}$) vs Bus Capacitance (C_b)

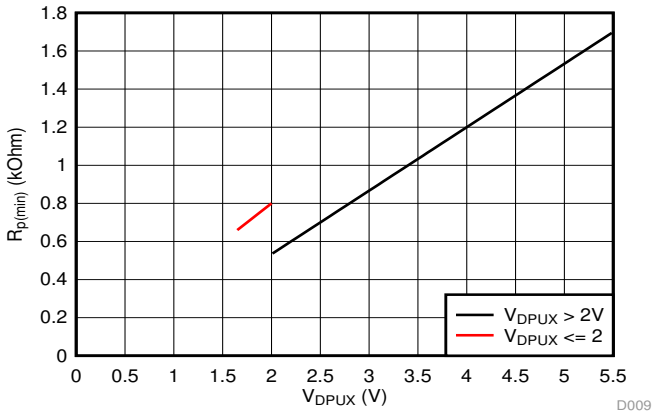

V_{OL} = 0.2*V_{DPUX}, I_{OL} = 2 mA when V_{DPUX} ≤ 2 V

V_{OL} = 0.4 V, I_{OL} = 3 mA when V_{DPUX} > 2 V

Figure 18. Minimum Pull-Up Resistance ($R_{p(min)}$) vs Pull-Up Reference Voltage (V_{DPUX})

11 Power Supply Recommendations

The operating power-supply voltage range of the TCA9546A is 1.65 V to 5.5 V applied at the VCC pin. When the TCA9546A is powered on for the first time or anytime the device needs to be reset by cycling the power supply, the power-on reset requirements must be followed to ensure the I^2C bus logic is initialized properly.

11.1 Power-On Reset Requirements

In the event of a glitch or data corruption, TCA9546A can be reset to its default conditions by using the power-on reset feature. Power-on reset requires that the device go through a power cycle to be completely reset. This reset also happens when the device is powered on for the first time in an application.

A power-on reset is shown in Figure 19.

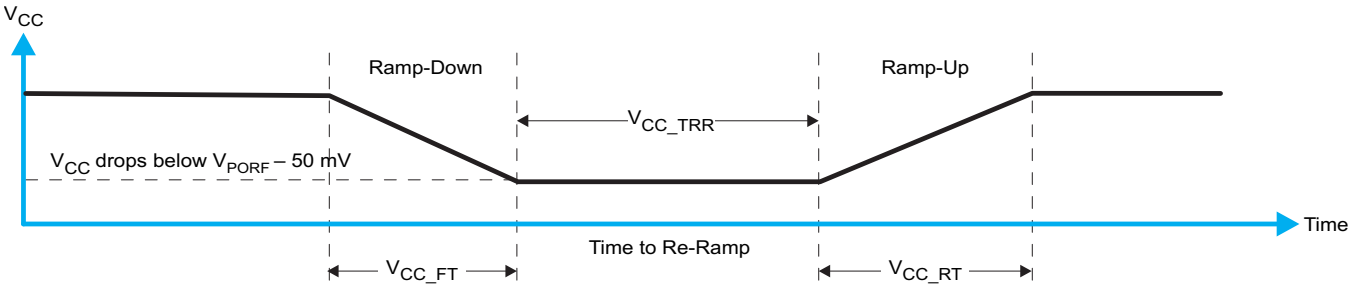

Figure 19. V_{CC} is Lowered Below the POR Threshold, Then Ramped Back Up to V_{CC}

Table 2 specifies the performance of the power-on reset feature for TCA9546A for both types of power-on reset.

Table 2. Recommended Supply Sequencing And Ramp Rates (1)

PARAMETER			MIN	TYP	MAX	UNIT
V_{CC_FT}	Fall time	See Figure 19	1		100	ms
V_{CC_RT}	Rise time	See Figure 19	0.1		100	ms
V_{CC_TRR}	Time to re-ramp (when V_{CC} drops below $V_{PORF(min)}$ – 50 mV or when V_{CC} drops to GND)	See Figure 19	40			µs
V_{CC_GH}	Level that V_{CC} can glitch down to, but not cause a functional disruption when V_{CC_GW} = 1 µs	See Figure 20			1.2	V
V_{CC_GW}	Glitch width that will not cause a functional disruption when V_{CC_GH} = 0.5 × V_{CC}	See Figure 20			10	µs
V_{PORF}	Voltage trip point of POR on falling V_{CC}	See Figure 21	0.8		1.25	V
V_{PORR}	Voltage trip point of POR on rising V_{CC}	See Figure 21	1.05		1.5	V

(1) All supply sequencing and ramp rate values are measured at T_A = 25°C

Copyright © 2014–2019, Texas Instruments Incorporated

Glitches in the power supply can also affect the power-on reset performance of this device. The glitch width (V_{CC_GW}) and height (V_{CC_GH}) are dependent on each other. The bypass capacitance, source impedance, and device impedance are factors that affect power-on reset performance. Figure 20 and Table 2 provide more information on how to measure these specifications.

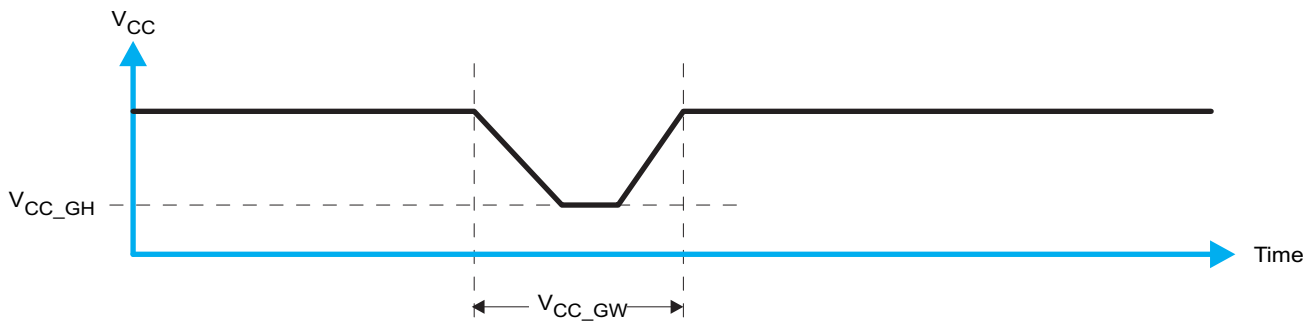

Figure 20. Glitch Width and Glitch Height

V_{POR} is critical to the power-on reset. V_{POR} is the voltage level at which the reset condition is released and all the registers and the I^2C/SMBus state machine are initialized to their default states. The value of V_{POR} differs based on the V_{CC} being lowered to or from 0. Figure 21 and Table 2 provide more details on this specification.

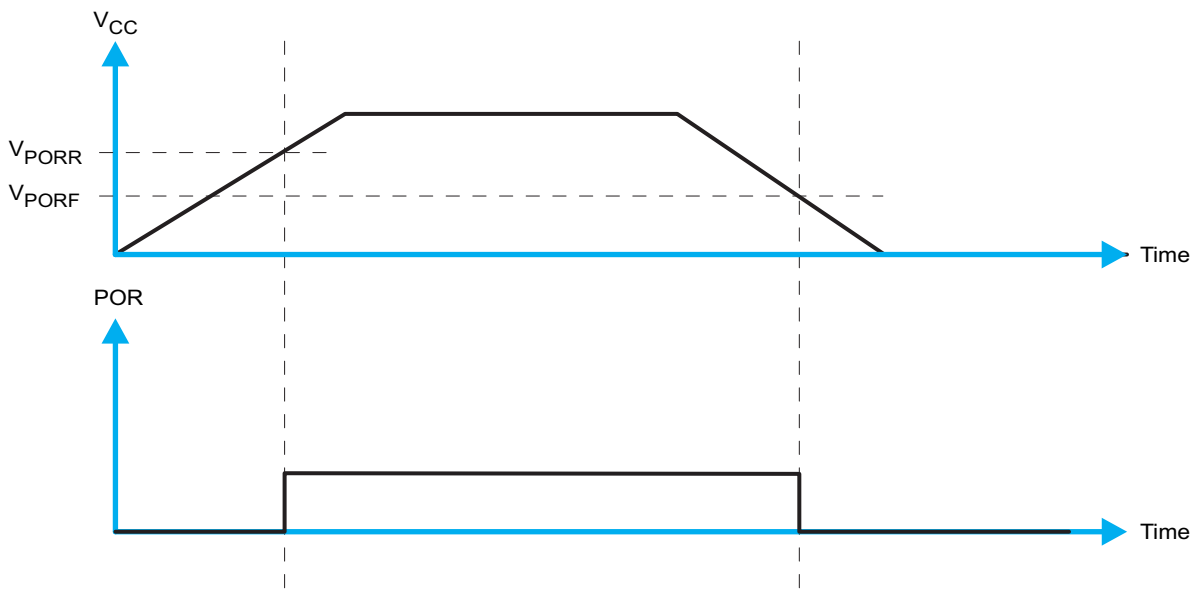

Figure 21. V_{POR}

12 Layout

12.1 Layout Guidelines

For PCB layout of the TCA9546A, common PCB layout practices should be followed but additional concerns related to high-speed data transfer such as matched impedances and differential pairs are not a concern for I^2C signal speeds. It is common to have a dedicated ground plane on an inner layer of the board and pins that are connected to ground should have a low-impedance path to the ground plane in the form of wide polygon pours and multiple vias. By-pass and de-coupling capacitors are commonly used to control the voltage on the VCC pin, using a larger capacitor to provide additional power in the event of a short power supply glitch and a smaller capacitor to filter out high-frequency ripple.

In an application where voltage translation is not required, all V_{DPUX} voltages and V_{CC} could be at the same potential and a single copper plane could connect all of pull-up resistors to the appropriate reference voltage. In an application where voltage translation is required, V_{DPUM}, V_{DPU0}, V_{DPU1}, V_{DPU2}, and V_{DPU3} may all be on the same layer of the board with split planes to isolate different voltage potentials.

To reduce the total I^2C bus capacitance added by PCB parasitics, data lines (SCn and SDn) should be a short as possible and the widths of the traces should also be minimized (e.g. 5-10 mils depending on copper weight).

12.2 Layout Example

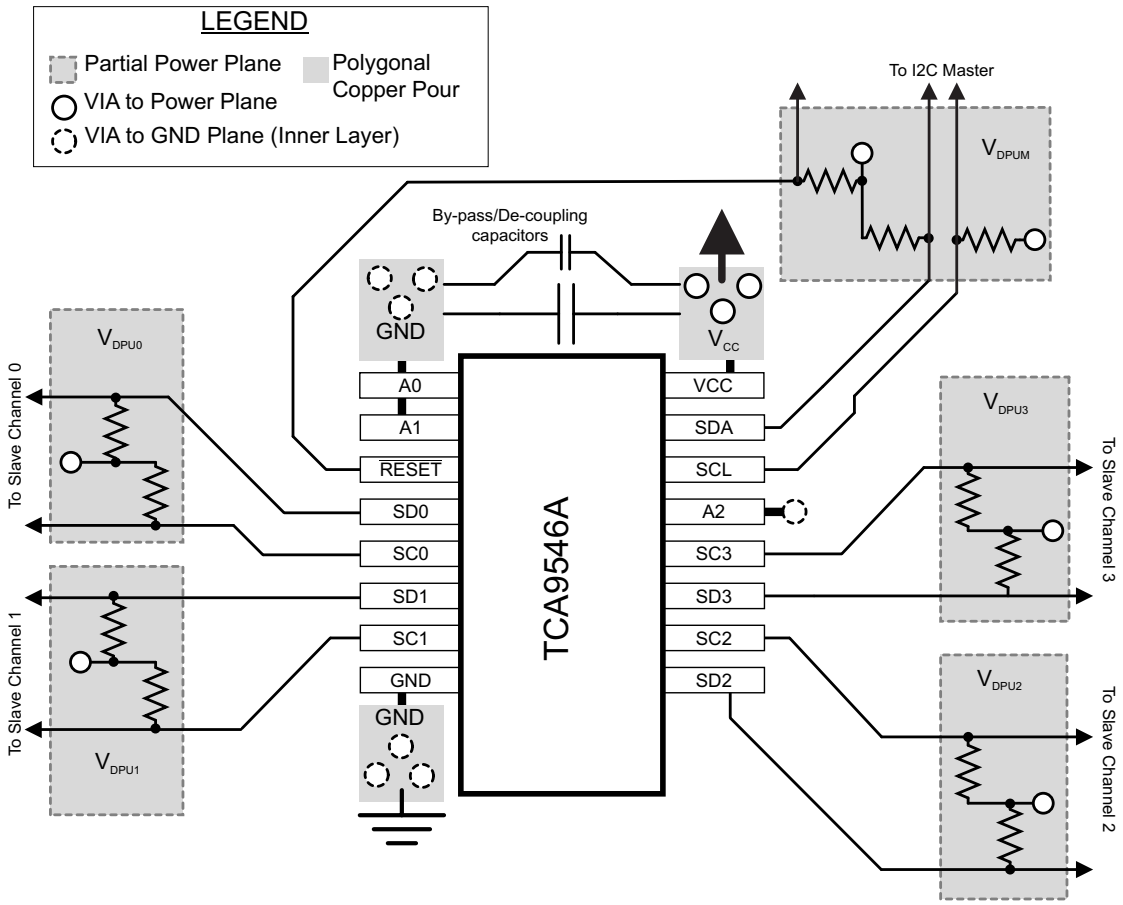

Copyright © 2014–2019, Texas Instruments Incorporated

13 デバイスおよびドキュメントのサポート

13.1 ドキュメントの更新通知を受け取る方法

ドキュメントの更新についての通知を受け取るには、ti.comのデバイス製品フォルダを開いてください。右上の「アラートを受け取る」をクリックして登録すると、変更されたすべての製品情報に関するダイジェストを毎週受け取れます。変更の詳細については、修正されたドキュメントに含まれている改訂履歴をご覧ください。

13.2 サポート・リソース

TI E2E™ support forums are an engineer's go-to source for fast, verified answers and design help — straight from the experts. Search existing answers or ask your own question to get the quick design help you need.

Linked content is provided "AS IS" by the respective contributors. They do not constitute TI specifications and do not necessarily reflect TI's views; see TI's Terms of Use.

13.3 商標

E2E is a trademark of Texas Instruments.
All other trademarks are the property of their respective owners.

13.4 静電気放電に関する注意事項

すべての集積回路は、適切なESD保護方法を用いて、取扱いと保存を行うようにして下さい。

静電気放電はわずかな性能の低下から完全なデバイスの故障に至るまで、様々な損傷を与えます。高精度の集積回路は、損傷に対して敏感であり、極めてわずかなパラメータの変化により、デバイスに規定された仕様に適合しなくなる場合があります。

13.5 Glossary

SLYZ022 — *TI Glossary*.

This glossary lists and explains terms, acronyms, and definitions.

14 メカニカル、パッケージ、および注文情報

以降のページには、メカニカル、パッケージ、および注文に関する情報が記載されています。この情報は、そのデバイスについて利用可能な最新のデータです。このデータは予告なく変更されることがあり、ドキュメントが改訂される場合もあります。本データシートのブラウザ版を使用されている場合は、画面左側の説明をご覧ください。

PACKAGING INFORMATION

Orderable part number	Status (1)	Material type (2)	Package | Pins	Package qty | Carrier	RoHS (3)	Lead finish/ Ball material (4)	MSL rating/ Peak reflow (5)	Op temp (°C)	Part marking (6)
TCA9546ADR	Active	Production	SOIC (D) | 16	2500 | LARGE T&R	Yes	NIPDAU	Level-1-260C-UNLIM	-40 to 85	TCA9546A
TCA9546ADR.B	Active	Production	SOIC (D) | 16	2500 | LARGE T&R	Yes	NIPDAU	Level-1-260C-UNLIM	-40 to 85	TCA9546A
TCA9546APWR	Active	Production	TSSOP (PW) | 16	2000 | LARGE T&R	Yes	NIPDAU | SN	Level-1-260C-UNLIM	-40 to 85	PW546A
TCA9546APWR.B	Active	Production	TSSOP (PW) | 16	2000 | LARGE T&R	Yes	NIPDAU	Level-1-260C-UNLIM	-40 to 85	PW546A
TCA9546APWRG4	Active	Production	TSSOP (PW) | 16	2000 | LARGE T&R	Yes	NIPDAU	Level-1-260C-UNLIM	-40 to 85	PW546A
TCA9546APWRG4.B	Active	Production	TSSOP (PW) | 16	2000 | LARGE T&R	Yes	NIPDAU	Level-1-260C-UNLIM	-40 to 85	PW546A

(1) **Status:** For more details on status, see our product life cycle.

(2) **Material type:** When designated, preproduction parts are prototypes/experimental devices, and are not yet approved or released for full production. Testing and final process, including without limitation quality assurance, reliability performance testing, and/or process qualification, may not yet be complete, and this item is subject to further changes or possible discontinuation. If available for ordering, purchases will be subject to an additional waiver at checkout, and are intended for early internal evaluation purposes only. These items are sold without warranties of any kind.

(3) **RoHS values:** Yes, No, RoHS Exempt. See the TI RoHS Statement for additional information and value definition.

(4) **Lead finish/Ball material:** Parts may have multiple material finish options. Finish options are separated by a vertical ruled line. Lead finish/Ball material values may wrap to two lines if the finish value exceeds the maximum column width.

(5) **MSL rating/Peak reflow:** The moisture sensitivity level ratings and peak solder (reflow) temperatures. In the event that a part has multiple moisture sensitivity ratings, only the lowest level per JEDEC standards is shown. Refer to the shipping label for the actual reflow temperature that will be used to mount the part to the printed circuit board.

(6) **Part marking:** There may be an additional marking, which relates to the logo, the lot trace code information, or the environmental category of the part.

Multiple part markings will be inside parentheses. Only one part marking contained in parentheses and separated by a "~" will appear on a part. If a line is indented then it is a continuation of the previous line and the two combined represent the entire part marking for that device.

Important Information and Disclaimer: The information provided on this page represents TI's knowledge and belief as of the date that it is provided. TI bases its knowledge and belief on information provided by third parties, and makes no representation or warranty as to the accuracy of such information. Efforts are underway to better integrate information from third parties. TI has taken and continues to take reasonable steps to provide representative and accurate information but may not have conducted destructive testing or chemical analysis on incoming materials and chemicals. TI and TI suppliers consider certain information to be proprietary, and thus CAS numbers and other limited information may not be available for release.

In no event shall TI's liability arising out of such information exceed the total purchase price of the TI part(s) at issue in this document sold by TI to Customer on an annual basis.

TAPE AND REEL INFORMATION

REEL DIMENSIONS

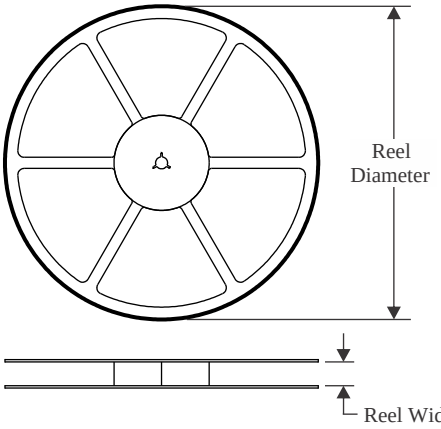

TAPE DIMENSIONS

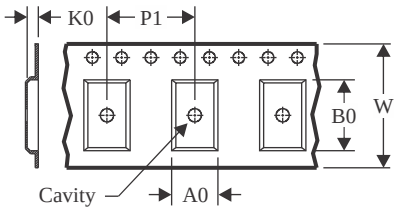

A0	Dimension designed to accommodate the component width
B0	Dimension designed to accommodate the component length
K0	Dimension designed to accommodate the component thickness
W	Overall width of the carrier tape
P1	Pitch between successive cavity centers

QUADRANT ASSIGNMENTS FOR PIN 1 ORIENTATION IN TAPE

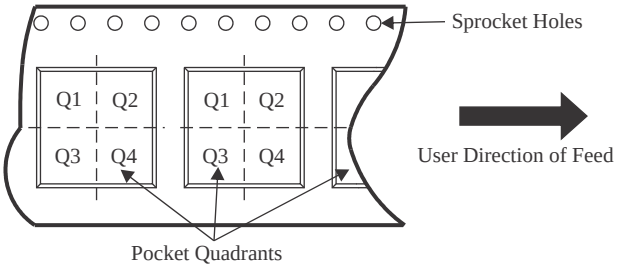

*All dimensions are nominal

Device	Package Type	Package Drawing	Pins	SPQ	Reel Diameter (mm)	Reel Width W1 (mm)	A0 (mm)	B0 (mm)	K0 (mm)	P1 (mm)	W (mm)	Pin1 Quadrant
TCA9546ADR	SOIC	D	16	2500	330.0	16.4	6.5	10.3	2.1	8.0	16.0	Q1
TCA9546APWR	TSSOP	PW	16	2000	330.0	12.4	6.9	5.6	1.6	8.0	12.0	Q1
TCA9546APWR	TSSOP	PW	16	2000	330.0	12.4	6.9	5.6	1.6	8.0	12.0	Q1
TCA9546APWR	TSSOP	PW	16	2000	330.0	12.4	6.9	5.3	1.6	8.0	12.0	Q1
TCA9546APWRG4	TSSOP	PW	16	2000	330.0	12.4	6.9	5.6	1.6	8.0	12.0	Q1

TAPE AND REEL BOX DIMENSIONS

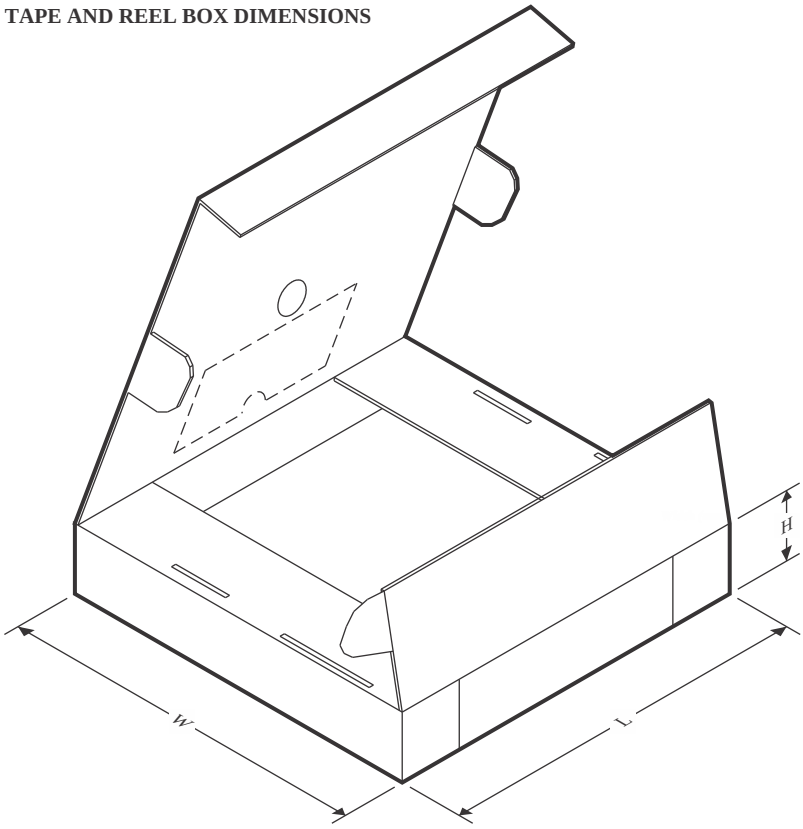

*All dimensions are nominal

Device	Package Type	Package Drawing	Pins	SPQ	Length (mm)	Width (mm)	Height (mm)
TCA9546ADR	SOIC	D	16	2500	353.0	353.0	32.0
TCA9546APWR	TSSOP	PW	16	2000	356.0	356.0	35.0
TCA9546APWR	TSSOP	PW	16	2000	353.0	353.0	32.0
TCA9546APWR	TSSOP	PW	16	2000	367.0	367.0	35.0
TCA9546APWRG4	TSSOP	PW	16	2000	353.0	353.0	32.0

D (R–PDSO–G16) PLASTIC SMALL OUTLINE

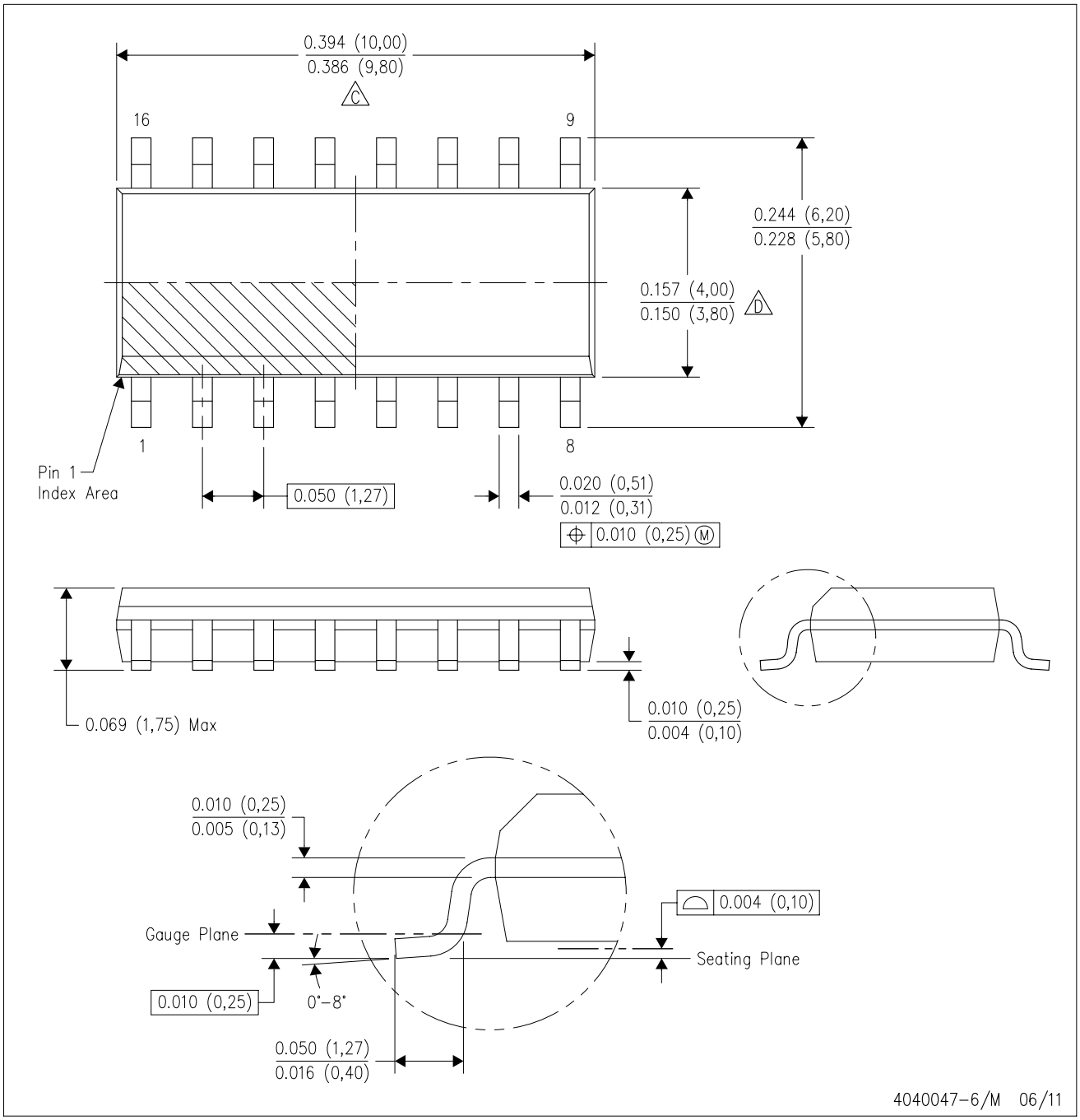

NOTES:
A. All linear dimensions are in inches (millimeters).
B. This drawing is subject to change without notice.
C. Body length does not include mold flash, protrusions, or gate burrs. Mold flash, protrusions, or gate burrs shall not exceed 0.006 (0,15) each side.
D. Body width does not include interlead flash. Interlead flash shall not exceed 0.017 (0,43) each side.
E. Reference JEDEC MS–012 variation AC.

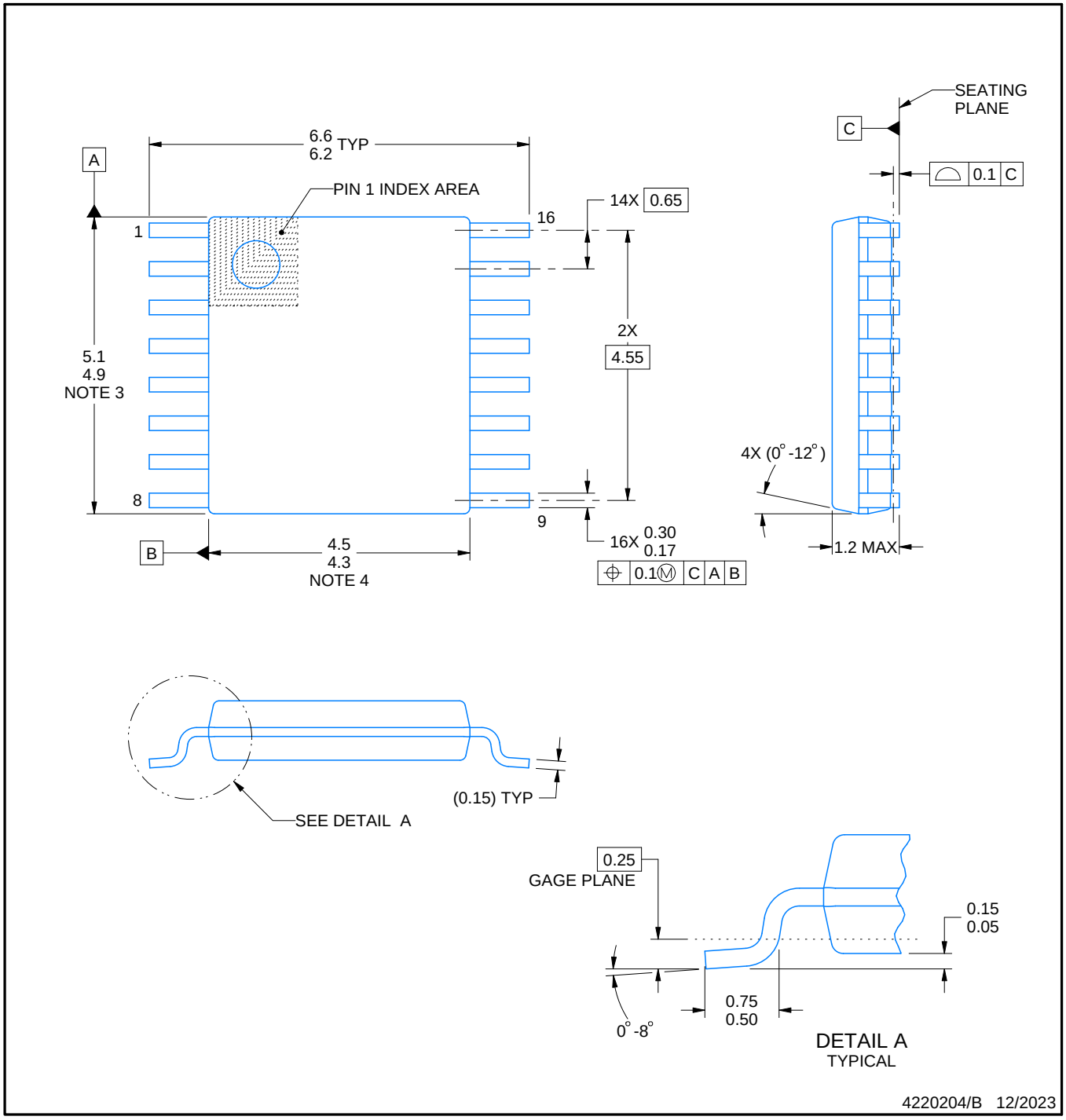

NOTES:

1. All linear dimensions are in millimeters. Any dimensions in parenthesis are for reference only. Dimensioning and tolerancing per ASME Y14.5M.
2. This drawing is subject to change without notice.
3. This dimension does not include mold flash, protrusions, or gate burrs. Mold flash, protrusions, or gate burrs shall not exceed 0.15 mm per side.
4. This dimension does not include interlead flash. Interlead flash shall not exceed 0.25 mm per side.
5. Reference JEDEC registration MO-153.

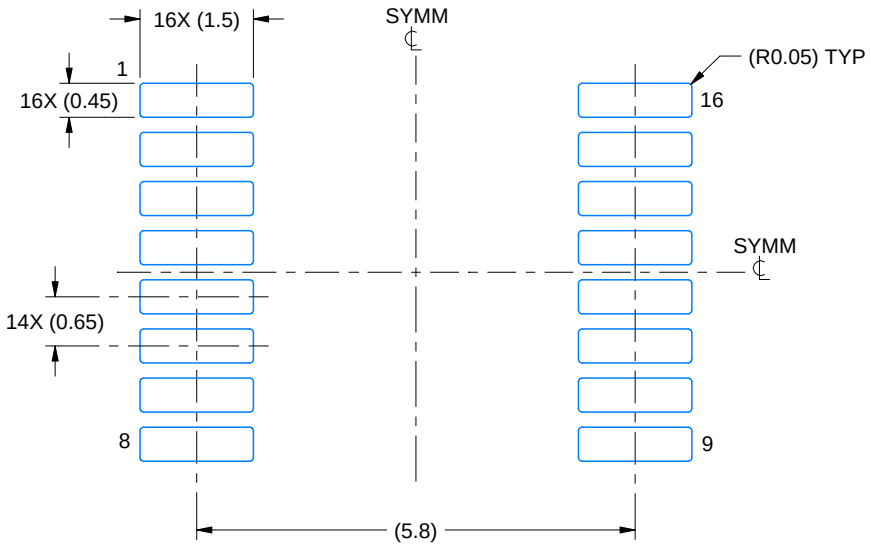

LAND PATTERN EXAMPLE
EXPOSED METAL SHOWN
SCALE: 10X

NON-SOLDER MASK DEFINED (PREFERRED)

SOLDER MASK DEFINED

SOLDER MASK DETAILS

4220204/B 12/2023

NOTES: (continued)

6. Publication IPC-7351 may have alternate designs.
7. Solder mask tolerances between and around signal pads can vary based on board fabrication site.

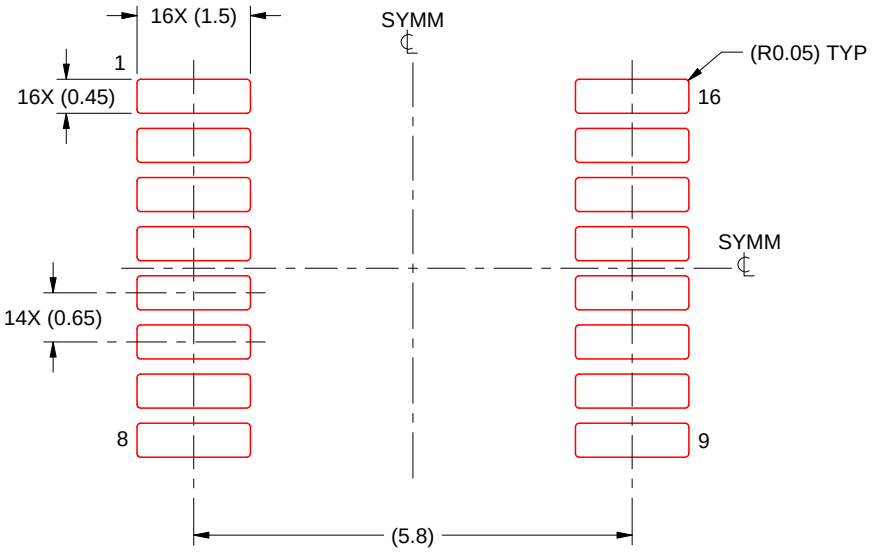

SOLDER PASTE EXAMPLE
BASED ON 0.125 mm THICK STENCIL
SCALE: 10X

4220204/B 12/2023

NOTES: (continued)

8. Laser cutting apertures with trapezoidal walls and rounded corners may offer better paste release. IPC-7525 may have alternate design recommendations.
9. Board assembly site may have different recommendations for stencil design.

重要なお知らせと免責事項

TI は、技術データと信頼性データ (データシートを含みます)、設計リソース (リファレンス デザインを含みます)、アプリケーションや設計に関する各種アドバイス、Web ツール、安全性情報、その他のリソースを、欠陥が存在する可能性のある「現状のまま」提供しており、商品性および特定目的に対する適合性の黙示保証、第三者の知的財産権の非侵害保証を含むいかなる保証も、明示的または黙示的にかかわらず拒否します。

これらのリソースは、TI 製品を使用する設計の経験を積んだ開発者への提供を意図したものです。(1) お客様のアプリケーションに適した TI 製品の選定、(2) お客様のアプリケーションの設計、検証、試験、(3) お客様のアプリケーションに該当する各種規格や、その他のあらゆる安全性、セキュリティ、規制、または他の要件への確実な適合に関する責任を、お客様のみが単独で負うものとします。

上記の各種リソースは、予告なく変更される可能性があります。これらのリソースは、リソースで説明されている TI 製品を使用するアプリケーションの開発の目的でのみ、TI はその使用をお客様に許諾します。これらのリソースに関して、他の目的で複製することや掲載することは禁止されています。TI や第三者の知的財産権のライセンスが付与されている訳ではありません。お客様は、これらのリソースを自身で使用した結果発生するあらゆる申し立て、損害、費用、損失、責任について、TI およびその代理人を完全に補償するものとし、TI は一切の責任を拒否します。

TI の製品は、 TI の販売条件 、 TI の総合的な品質ガイドライン 、 ti.com または TI 製品などに関連して提供される他の適用条件に従い提供されます。TI がこれらのリソースを提供することは、適用される TI の保証または他の保証の放棄の拡大や変更を意味するものではありません。 TI がカスタム、またはカスタマー仕様として明示的に指定していない限り、TI の製品は標準的なカタログに掲載される汎用機器です。

お客様がいかなる追加条項または代替条項を提案する場合も、TI はそれらに異議を唱え、拒否します。

Copyright © 2026, Texas Instruments Incorporated

最終更新日：2025 年 10 月