TEXAS INSTRUMENTS
TLV313, TLV2313, TLV4313
JAJSC90B – JUNE 2016 – REVISED FEBRUARY 2017

TLVx313 低電力、レール・ツー・レール入出力、オフセット標準値500µV、1MHzオペアンプ、低コスト・システム用

1 特長

- 低コストのシステム用の高精度アンプ
- 低いI_Q: 65µA/ch
- 広い電源電圧範囲: 1.8V～5.5V
- 低ノイズ: 1kHz時に26nV/√Hz
- ゲイン帯域幅: 1MHz
- レール・ツー・レール入出力
- 低い入力バイアス電流: 1pA
- 低いオフセット電圧: 0.75mV
- ユニティ・ゲインで安定
- 内部RF/EMIフィルタ
- 拡張温度範囲:
  –40℃～+125℃

2 アプリケーション

- 医療/ヘルスケア
- フィットネス/ウェアラブル電子機器
- 公共事業計量(ガス、水道、電気)
- ビルディング・オートメーション機器
- 貨幣計数機

CMRRおよびPSRRと温度との関係

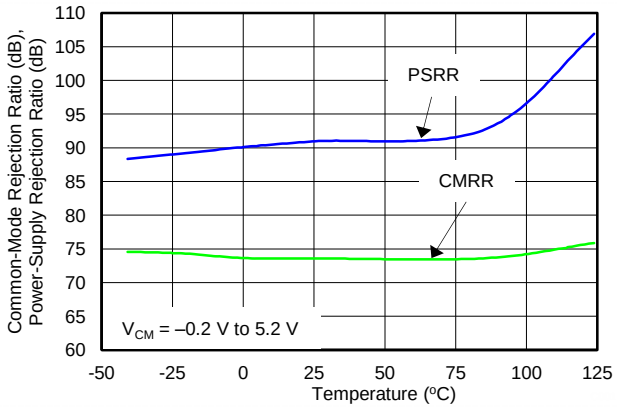

3 概要

TLV313ファミリは1、2、4チャネルの高精度オペアンプで、低消費電力と優れた性能を実現しています。このため、ウェアラブル機器、公共事業の計量、ビルディング・オートメーション、貨幣計数機など広範なアプリケーションに適しています。このファミリはレール・ツー・レール入出力(RRIO)、低い静止電流(標準値65µA)、広い帯域幅(1MHz)、非常に低いノイズ(1kHzにおいて26nV/√Hz)という特長があるため、コストと性能の適切なバランスが必要な各種のバッテリ駆動アプリケーションに最適です。さらに、入力バイアス電流が低いため、これらのデバイスはソース・インピーダンスがメガオーム単位のアプリケーションでも使用できます。

TLV313デバイスは堅牢に設計されており、150pFまでの容量性負荷に対するユニティ・ゲイン安定性、RF/EMI除去フィルタの搭載、オーバードライブ状態で位相反転が発生しない、高い静電放電(ESD)保護(4kV HBM)といった特長があるため、回路設計が容易です。

これらのデバイスは、最低+1.8V (±0.9V)、最大+5.5V (±2.75V)の電圧で動作するよう最適化されており、拡張温度範囲の-40℃～+125℃が定格内です。

1チャネルのTLV313デバイスは、SC70-5とSOT23-5の両方のパッケージで供給されます。2チャネルのTLV2313デバイスはSOIC-8およびVSSOP-8パッケージで、4チャネルのTLV4313デバイスはTSSOP-14パッケージで供給されます。

製品情報(1)

型番	パッケージ	本体サイズ(公称)
TLV313	SC70 (5)	2.00mm×1.25mm
	SOT23 (5)	2.90mm×1.60mm
TLV2313	SOIC (8)	4.90mm×3.91mm
	VSSOP (8)	3.00mm×3.00mm
TLV4313	TSSOP (14)	5.00mm×4.40mm

(1) 提供されているすべてのパッケージについては、データシートの末尾にある注文情報を参照してください。

英語版のTI製品についての情報を翻訳したこの資料は、製品の概要を確認する目的で便宜的に提供しているものです。該当する正式な英語版の最新情報は、www.ti.comで閲覧でき、その内容が常に優先されます。TIでは翻訳の正確性および妥当性につきましては一切保証いたしません。実際の設計などの前には、必ず最新版の英語版をご参照くださいますようお願いいたします。

目次

1 特長 ... 1
2 アプリケーション ... 1
3 概要 ... 1
4 改訂履歴 ... 2
5 **Device Comparison Table** ... 3
6 **Pin Configuration and Functions** ... 3
7 **Specifications** ... 6
7.1 Absolute Maximum Ratings ... 6
7.2 ESD Ratings ... 6
7.3 Recommended Operating Conditions ... 6
7.4 Thermal Information: TLV313 ... 7
7.5 Thermal Information: TLV2313 ... 7
7.6 Thermal Information: TLV4313 ... 7
7.7 Electrical Characteristics: 5.5 V ... 8
7.8 Electrical Characteristics: 1.8 V ... 10
7.9 Typical Characteristics: Table of Graphs ... 12
7.10 Typical Characteristics ... 13
8 **Detailed Description** ... 16
8.1 Overview ... 16
8.2 Functional Block Diagram ... 16
8.3 Feature Description ... 17
8.4 Device Functional Modes ... 18
9 **Application and Implementation** ... 19
9.1 Application Information ... 19
9.2 Typical Application ... 19
9.3 System Examples ... 20
10 **Power Supply Recommendations** ... 21
10.1 Input and ESD Protection ... 21
11 **Layout** ... 22
11.1 Layout Guidelines ... 22
11.2 Layout Example ... 22
12 デバイスおよびドキュメントのサポート ... 23
12.1 ドキュメントのサポート ... 23
12.2 ドキュメントの更新通知を受け取る方法 ... 23
12.3 関連リンク ... 23
12.4 コミュニティ・リソース ... 23
12.5 商標 ... 23
12.6 静電気放電に関する注意事項 ... 23
12.7 Glossary ... 23
13 メカニカル、パッケージ、および注文情報 ... 23

4 改訂履歴

資料番号末尾の英字は改訂を表しています。その改訂履歴は英語版に準じています。

Revision A (June 2016) から **Revision B** に変更 **Page**

- Changed pin assignment for DCK package ... 3

2016年6月発行のものから更新 **Page**

- 供給状況を開発中から量産へ 変更 ... 1
- 変更「*関連資料*」セクションのフォーマット ... 23
- 変更「*ドキュメントの更新通知を受け取る方法*」セクションの表現 ... 23

Copyright © 2016–2017, Texas Instruments Incorporated

5 Device Comparison Table

DEVICE	NO. OF CHANNELS	PACKAGE LEADS				
		SC70	SOT23	SOIC	VSSOP	TSSOP
TLV313	1	5	5	—	—	—
TLV2313	2	—	—	8	8	—
TLV4313	4	—	—	—	—	14

6 Pin Configuration and Functions

DCK Package
5-Pin SC70
TLV313 Top View

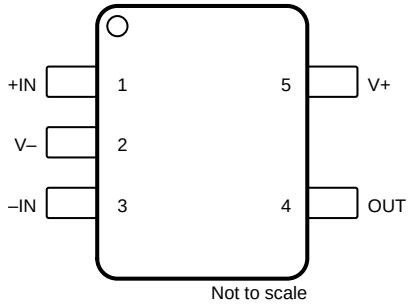

Not to scale

DBV Package
5-Pin SOT23
TLV313 Top View

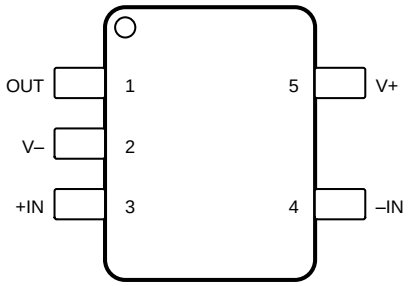

Not to scale

Pin Functions: TLV313

PIN			I/O	DESCRIPTION
NAME	DCK (SC70)	DBV (SOT23)		
+IN	1	3	I	Noninverting input
–IN	3	4	I	Inverting input
OUT	4	1	O	Output
V+	5	5	—	Positive (highest) power supply
V–	2	2	—	Negative (lowest) power supply

Copyright © 2016–2017, Texas Instruments Incorporated

D, DGK Packages
8-Pin SOIC, 8-Pin VSSOP
TLV2313 Top View

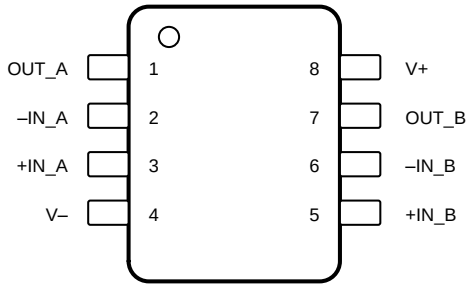

Not to scale

Pin Functions: TLV2313

PIN			I/O	DESCRIPTION
NAME	D (SOIC)	DGK (VSSOP)		
V–	4	4	—	Negative (lowest) power supply
V+	8	8	—	Positive (highest) power supply
OUT A	1	1	O	Output, channel A
OUT B	7	7	O	Output, channel B
–IN A	2	2	I	Inverting input, channel A
+IN A	3	3	I	Noninverting input, channel A
–IN B	6	6	I	Inverting input, channel B
+IN B	5	5	I	Noninverting input, channel B

Copyright © 2016–2017, Texas Instruments Incorporated

PW Package
14-Pin TSSOP
TLV4313 Top View

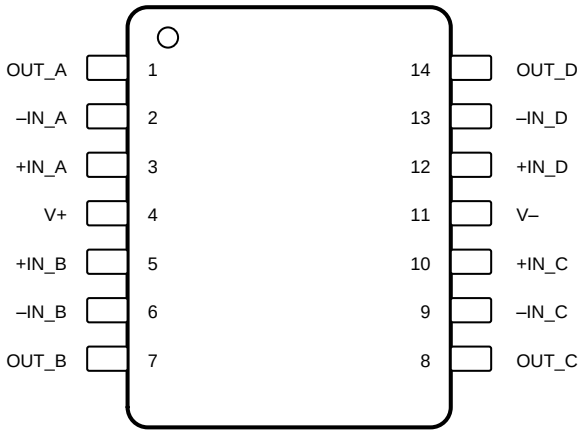

Not to scale

Pin Functions: TLV4313

PIN		I/O	DESCRIPTION
NAME	PW (TSSOP)		
V–	11	—	Negative (lowest) power supply
V+	4	—	Positive (highest) power supply
OUT A	1	O	Output, channel A
OUT B	7	O	Output, channel B
OUT C	8	O	Output, channel C
OUT D	14	O	Output, channel D
–IN A	2	I	Inverting input, channel A
+IN A	3	I	Noninverting input, channel A
–IN B	6	I	Inverting input, channel B
+IN B	5	I	Noninverting input, channel B
–IN C	9	I	Inverting input, channel C
+IN C	10	I	Noninverting input, channel C
–IN D	13	I	Inverting input, channel D
+IN D	12	I	Noninverting input, channel D

Copyright © 2016–2017, Texas Instruments Incorporated

7 Specifications

7.1 Absolute Maximum Ratings

over operating free-air temperature range (unless otherwise noted)(1)

		MIN	MAX	UNIT
Voltage	Supply voltage		7	V
	Signal input terminals(2)	(V−) − (0.5)	(V+) + 0.5	V
Current	Signal input terminals(2)	–10	10	mA
	Output short circuit(3)	Continuous		
Temperature	Operating, T_A	–40	150	°C
	Junction, T_J		150	°C
	Storage, T_{stg}	–65	150	°C

(1) Stresses beyond those listed under *Absolute Maximum Ratings* may cause permanent damage to the device. These are stress ratings only, which do not imply functional operation of the device at these or any other conditions beyond those indicated under *Recommended Operating Conditions*. Exposure to absolute-maximum-rated conditions for extended periods may affect device reliability.
(2) Input pins are diode-clamped to the power-supply rails. Input signals that may swing more than 0.5 V beyond the supply rails must be current limited to 10 mA or less.
(3) Short-circuit to ground, one amplifier per package.

7.2 ESD Ratings

		VALUE	UNIT
$V_{(ESD)}$ Electrostatic discharge	Human-body model (HBM), per ANSI/ESDA/JEDEC JS-001(1)	±4000	V
	Charged-device model (CDM), per JEDEC specification JESD22-C101(2)	±1000	

(1) JEDEC document JEP155 states that 500-V HBM allows safe manufacturing with a standard ESD control process.
(2) JEDEC document JEP157 states that 250-V CDM allows safe manufacturing with a standard ESD control process.

7.3 Recommended Operating Conditions

over operating free-air temperature range (unless otherwise noted)

		MIN	MAX	UNIT
V_S	Supply voltage	1.8	5.5	V
T_A	Specified temperature range	–40	125	°C

Copyright © 2016–2017, Texas Instruments Incorporated

7.4 Thermal Information: TLV313

THERMAL METRIC(1)		TLV313		UNIT
		DBV (SOT23)	DCK (SC70)	
		5 PINS	5 PINS	
$R_{\theta JA}$	Junction-to-ambient thermal resistance	228.5	281.4	°C/W
$R_{\theta JC(top)}$	Junction-to-case (top) thermal resistance	99.1	91.6	°C/W
$R_{\theta JB}$	Junction-to-board thermal resistance	54.6	59.6	°C/W
ψ_{JT}	Junction-to-top characterization parameter	7.7	1.5	°C/W
ψ_{JB}	Junction-to-board characterization parameter	53.8	58.8	°C/W
$R_{\theta JC(bot)}$	Junction-to-case (bottom) thermal resistance	N/A	N/A	°C/W

(1) For more information about traditional and new thermal metrics, see the *Semiconductor and IC Package Thermal Metrics* application report.

7.5 Thermal Information: TLV2313

THERMAL METRIC(1)		TLV2313		UNIT
		D (SOIC)	DGK (VSSOP)	
		8 PINS	8 PINS	
$R_{\theta JA}$	Junction-to-ambient thermal resistance	138.4	191.2	°C/W
$R_{\theta JC(top)}$	Junction-to-case (top) thermal resistance	89.5	61.9	°C/W
$R_{\theta JB}$	Junction-to-board thermal resistance	78.6	111.9	°C/W
ψ_{JT}	Junction-to-top characterization parameter	29.9	5.1	°C/W
ψ_{JB}	Junction-to-board characterization parameter	78.1	110.2	°C/W
$R_{\theta JC(bot)}$	Junction-to-case (bottom) thermal resistance	N/A	N/A	°C/W

(1) For more information about traditional and new thermal metrics, see the *Semiconductor and IC Package Thermal Metrics* application report.

7.6 Thermal Information: TLV4313

THERMAL METRIC(1)		TLV4313	UNIT
		PW (TSSOP)	
		14 PINS	
$R_{\theta JA}$	Junction-to-ambient thermal resistance	121.0	°C/W
$R_{\theta JC(top)}$	Junction-to-case (top) thermal resistance	49.4	°C/W
$R_{\theta JB}$	Junction-to-board thermal resistance	62.8	°C/W
ψ_{JT}	Junction-to-top characterization parameter	5.9	°C/W
ψ_{JB}	Junction-to-board characterization parameter	62.2	°C/W
$R_{\theta JC(bot)}$	Junction-to-case (bottom) thermal resistance	N/A	°C/W

(1) For more information about traditional and new thermal metrics, see the *Semiconductor and IC Package Thermal Metrics* application report.

Copyright © 2016–2017, Texas Instruments Incorporated

7.7 Electrical Characteristics: 5.5 V

At T_A = 25°C, R_L = 10 kΩ connected to V_S / 2, and V_{CM} = V_{OUT} = V_S / 2, unless otherwise noted.(1)

PARAMETER		TEST CONDITIONS	MIN	TYP	MAX	UNIT
OFFSET VOLTAGE						
V_{OS}	Input offset voltage			0.75	3	mV
dV_{OS}/dT	Input offset voltage vs temperature	T_A = –40°C to 125°C		2		µV/°C
PSRR	Power-supply rejection ratio		74	90		dB
INPUT VOLTAGE RANGE						
V_{CM}	Common-mode voltage range	No phase reversal, rail-to-rail input	(V–) – 0.2		(V+) + 0.2	V
CMRR	Common-mode rejection ratio	(V_S–) – 0.2 V < V_{CM} < (V_S+) – 1.3 V		85		dB
		V_{CM} = –0.2 V to 5.7 V	64	80		dB
INPUT BIAS CURRENT						
I_B	Input bias current			±1		pA
I_{OS}	Input offset current			±1		pA
NOISE						
	Input voltage noise (peak-to-peak)	f = 0.1 Hz to 10 Hz		6		μV_{PP}
e_n	Input voltage noise density	f = 10 kHz		22		nV/√Hz
		f = 1 kHz		26		nV/√Hz
i_n	Input current noise density	f = 1 kHz		5		fA/√Hz
INPUT CAPACITANCE						
C_{IN}	Differential			1		pF
	Common-mode			5		pF
OPEN-LOOP GAIN						
A_{OL}	Open-loop voltage gain	0.05 V < V_O < (V+) – 0.05 V, R_L = 100 kΩ		104		dB
		0.3 V < V_O < (V+) – 0.3 V, R_L = 2 kΩ	100	110		dB
	Phase margin	V_S = 5.0 V, G = +1		65		°

(1) Parameters with minimum or maximum specification limits are 100% production tested at 25ºC, unless otherwise noted. Over-temperature limits are based on characterization and statistical analysis.

Copyright © 2016–2017, Texas Instruments Incorporated

Electrical Characteristics: 5.5 V (continued)

At T_A = 25°C, R_L = 10 kΩ connected to V_S / 2, and V_{CM} = V_{OUT} = V_S / 2, unless otherwise noted.(1)

PARAMETER		TEST CONDITIONS	MIN	TYP	MAX	UNIT
FREQUENCY RESPONSE						
GBW	Gain-bandwidth product	V_S = 5.0 V, C_L = 10 pF		1		MHz
SR	Slew rate	V_S = 5.0 V, G = +1		0.5		V/µs
t_S	Settling time	To 0.01%, V_S = 5.0 V, 2-V step , G = +1		6		µs
	Overload recovery time	V_S = 5.0 V, V_{IN} × Gain > V_S		3		µs
OUTPUT						
V_O	Voltage output swing from supply rails	R_L = 100 kΩ(2)		5	20	mV
		R_L = 2 kΩ(2)		75	100	mV
I_{SC}	Short-circuit current			±15		mA
R_O	Open-loop output impedance			2300		Ω
POWER SUPPLY						
V_S	Specified voltage range		1.8 (±0.9)		5.5 (±2.75)	V
I_Q	Quiescent current per amplifier	T_A = –40°C to 125°C, V_S = 5.0 V, I_O = 0 mA		65	90	µA
	Power-on time	V_S = 0 V to 5 V, to 90% I_Q level		10		µs

(2) Specified by design and characterization; not production tested.

Copyright © 2016–2017, Texas Instruments Incorporated

7.8 Electrical Characteristics: 1.8 V

At T_A = 25°C, R_L = 10 kΩ connected to V_S / 2, V_{CM} = V_{S+} – 1.3 V, and V_{OUT} = V_S / 2, unless otherwise noted.(1)

PARAMETER		TEST CONDITIONS	MIN	TYP	MAX	UNIT
OFFSET VOLTAGE						
V_{OS}	Input offset voltage			0.75	3	mV
dV_{OS}/dT	Input offset voltage vs temperature	T_A = –40°C to 125°C		2		µV/°C
PSRR	Power-supply rejection ratio		74	90		dB
INPUT VOLTAGE RANGE						
V_{CM}	Common-mode voltage range	No phase reversal, rail-to-rail input	(V–) – 0.2		(V+) + 0.2	V
CMRR	Common-mode rejection ratio	(V_S–) – 0.2 V < V_{CM} < (V_S+) – 1.3 V		85		dB
		V_{CM} = –0.2 V to +1.8 V		73		dB
INPUT BIAS CURRENT						
I_B	Input bias current			±1		pA
I_{OS}	Input offset current			±1		pA
NOISE						
	Input voltage noise (peak-to-peak)	f = 0.1 Hz to 10 Hz		6		μV_{PP}
e_n	Input voltage noise density	f = 10 kHz		22		$nV/\sqrt{Hz}$
		f = 1 kHz		26		$nV/\sqrt{Hz}$
i_n	Input current noise density	f = 1 kHz		5		$fA/\sqrt{Hz}$
INPUT CAPACITANCE						
C_{IN}	Differential			1		pF
	Common-mode			5		pF
OPEN-LOOP GAIN						
A_{OL}	Open-loop voltage gain	0.1 V < V_O < (V+) – 0.1 V, R_L = 10 kΩ		110		dB
		0.05 V < V_O < (V+) – 0.05 V, R_L = 100 kΩ		110		dB

(1) Parameters with minimum or maximum specification limits are 100% production tested at 25ºC, unless otherwise noted. Over-temperature limits are based on characterization and statistical analysis.

Copyright © 2016–2017, Texas Instruments Incorporated

Electrical Characteristics: 1.8 V (continued)

At T_A = 25°C, R_L = 10 kΩ connected to V_S / 2, V_{CM} = V_{S+} – 1.3 V, and V_{OUT} = V_S / 2, unless otherwise noted.(1)

PARAMETER		TEST CONDITIONS	MIN	TYP	MAX	UNIT
FREQUENCY RESPONSE						
GBW	Gain-bandwidth product	C_L = 10 pF		0.9		MHz
SR	Slew rate	G = +1		0.45		V/μs
t_S	Settling time	To 0.01%, V_S = 5.0 V, 2-V step , G = +1		6		μs
	Overload recovery time	V_S = 5.0 V, V_{IN} × Gain > V_S		3		μs
OUTPUT						
V_O	Voltage output swing from supply rails	R_L = 100 kΩ(2)		5		mV
		R_L = 2 kΩ(2)		25		mV
I_{SC}	Short-circuit current			±6		mA
R_O	Open-loop output impedance			2300		Ω
POWER SUPPLY						
V_S	Specified voltage range		1.8 (±0.9)		5.5 (±2.75)	V
I_Q	Quiescent current per amplifier	T_A = –40°C to 125°C, V_S = 5.0 V, I_O = 0 mA		65	90	μA
	Power-on time	V_S = 0 V to 5 V, to 90% I_Q level		10		μs

(2) Specified by design and characterization; not production tested.

Copyright © 2016–2017, Texas Instruments Incorporated

7.9 Typical Characteristics: Table of Graphs

Table 1. Table of Graphs

TITLE	FIGURE
Open-Loop Gain and Phase vs Frequency	Figure 1
Quiescent Current vs Supply Voltage	Figure 2
Offset Voltage Production Distribution	Figure 3
Offset Voltage vs Common-Mode Voltage (Maximum Supply)	Figure 4
CMRR and PSRR vs Frequency (RTI)	Figure 5
0.1-Hz to 10-Hz Input Voltage Noise (5.5 V)	Figure 6
Input Voltage Noise Spectral Density vs Frequency (1.8 V, 5.5 V)	Figure 7
Input Bias and Offset Current vs Temperature	Figure 8
Open-Loop Output Impedance vs Frequency	Figure 9
Maximum Output Voltage vs Frequency and Supply Voltage	Figure 10
Output Voltage Swing vs Output Current (over Temperature)	Figure 11
Closed-Loop Gain vs Frequency, G = 1, –1, 10 (1.8 V)	Figure 12
Small-Signal Step Response, Noninverting (1.8 V)	Figure 13
Small-Signal Step Response, Noninverting (5.5 V)	Figure 14
Large-Signal Step Response, Noninverting (1.8 V)	Figure 15
Large-Signal Step Response, Noninverting (5.5 V)	Figure 16
No Phase Reversal	Figure 17
EMIRR IN+ vs Frequency	Figure 18

Copyright © 2016–2017, Texas Instruments Incorporated

7.10 Typical Characteristics

At T_A = 25°C, V_S = 5 V, R_L = 10 kΩ connected to V_S / 2, and V_{CM} = V_{OUT} = V_S / 2, unless otherwise noted.

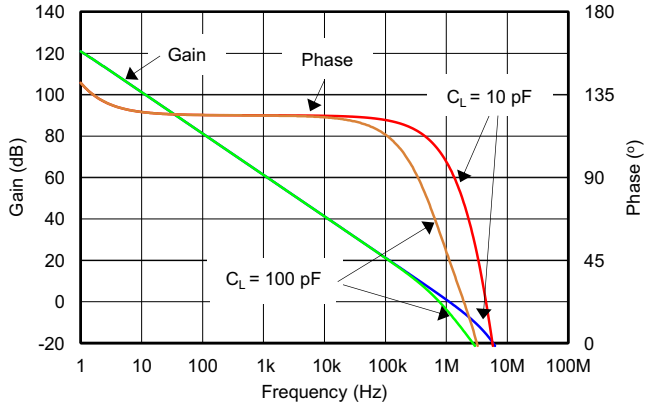

Figure 1. Open-Loop Gain and Phase vs Frequency

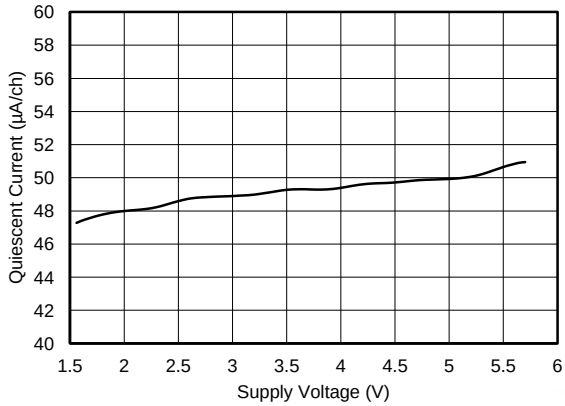

Figure 2. Quiescent Current vs Supply

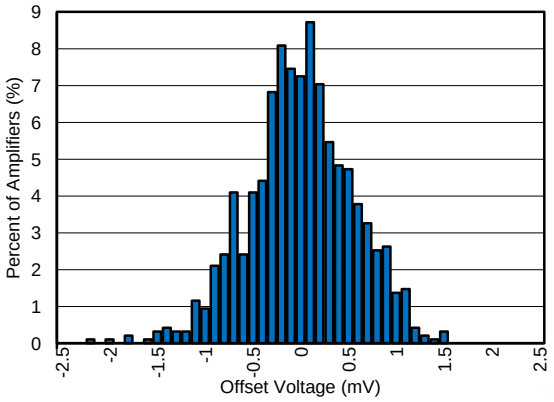

Figure 3. Offset Voltage Production Distribution

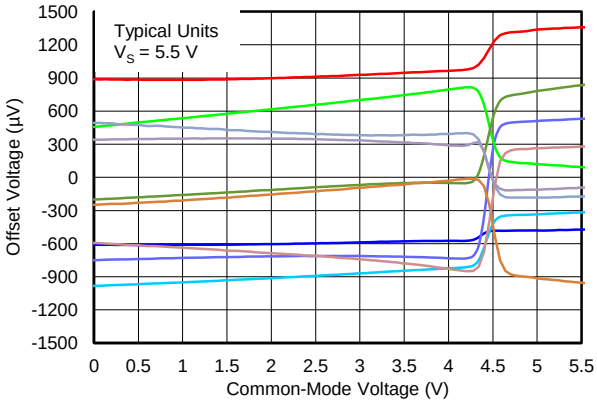

Figure 4. Offset Voltage vs Common-Mode Voltage

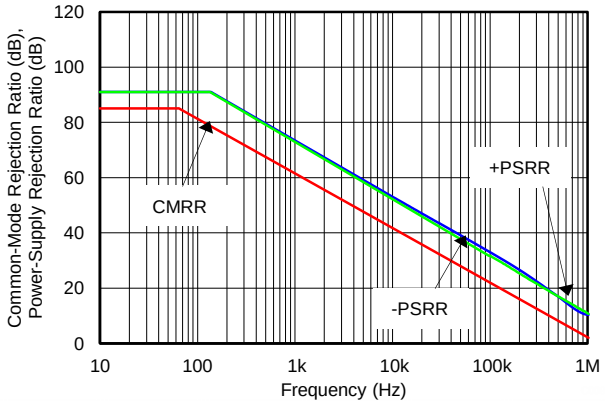

Figure 5. CMRR and PSRR vs Frequency (Referred-to-Input)

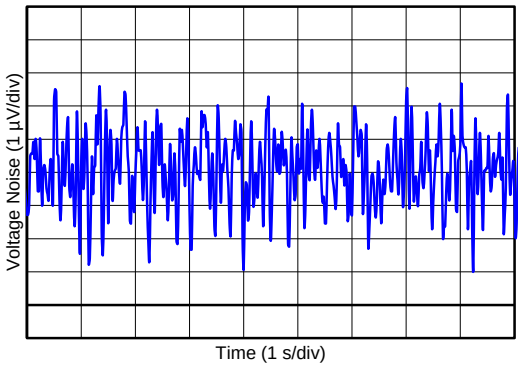

Figure 6. 0.1-Hz to 10-Hz Input Voltage Noise

Typical Characteristics (continued)

At T_A = 25°C, V_S = 5 V, R_L = 10 kΩ connected to V_S / 2, and V_{CM} = V_{OUT} = V_S / 2, unless otherwise noted.

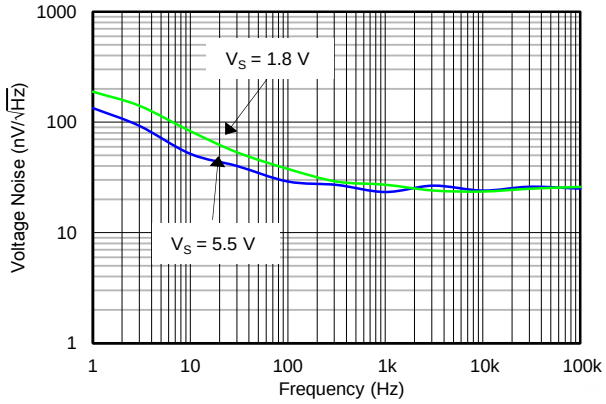

Figure 7. Input Voltage Noise Spectral Density vs Frequency

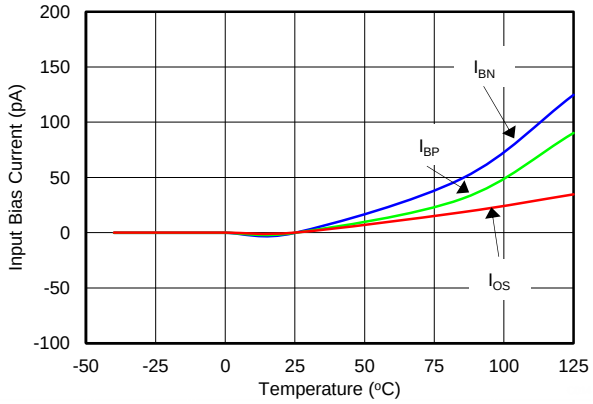

Figure 8. Input Bias and Offset Current vs Temperature

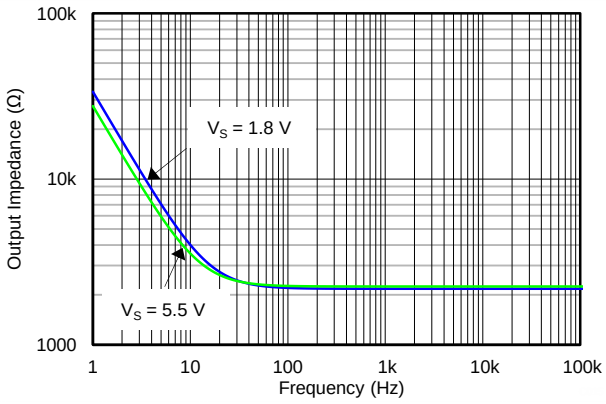

Figure 9. Open-Loop Output Impedance vs Frequency

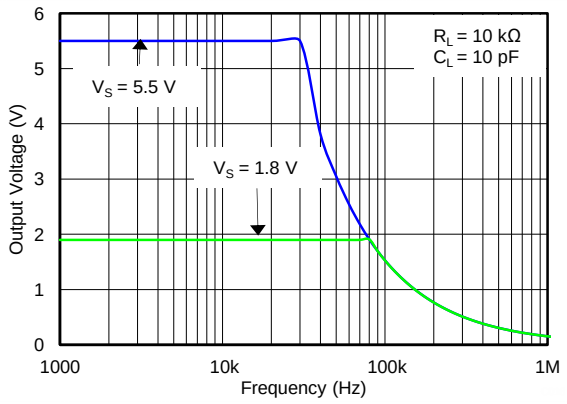

Figure 10. Maximum Output Voltage vs Frequency and Supply Voltage

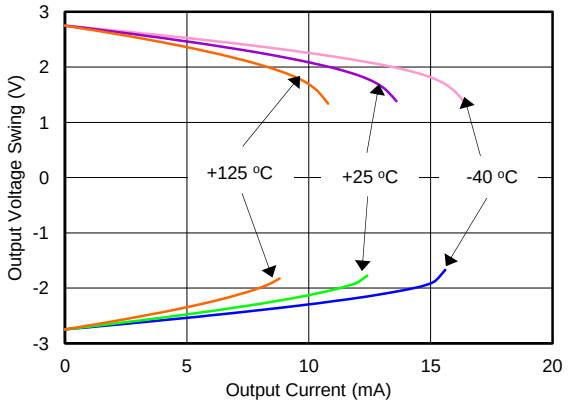

Figure 11. Output Voltage Swing vs Output Current (Over Temperature)

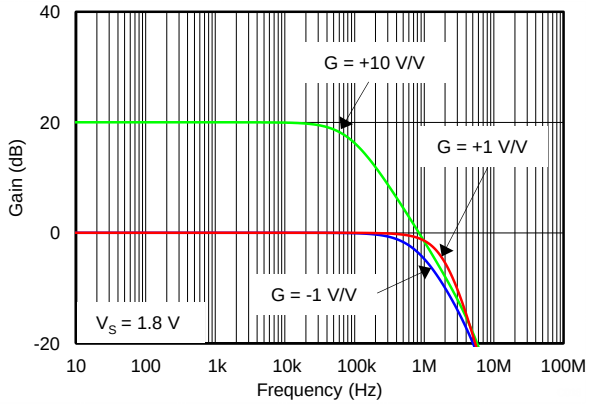

Figure 12. Closed-Loop Gain vs Frequency (Minimum Supply)

Copyright © 2016–2017, Texas Instruments Incorporated

Typical Characteristics (continued)

At T_A = 25°C, V_S = 5 V, R_L = 10 kΩ connected to V_S / 2, and V_{CM} = V_{OUT} = V_S / 2, unless otherwise noted.

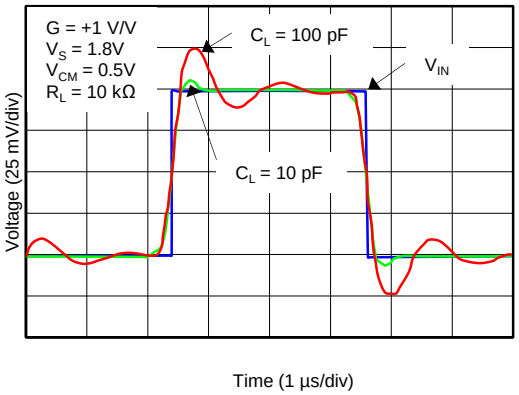

Figure 13. Small-Signal Pulse Response (Minimum Supply)

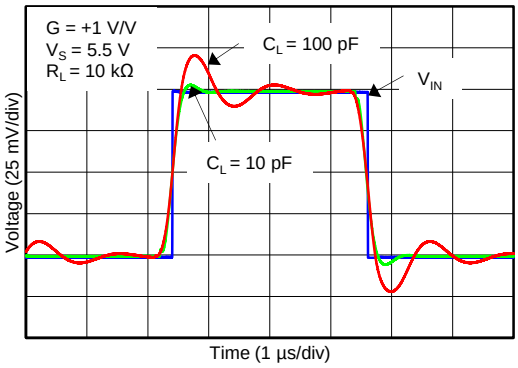

Figure 14. Small-Signal Pulse Response (Maximum Supply)

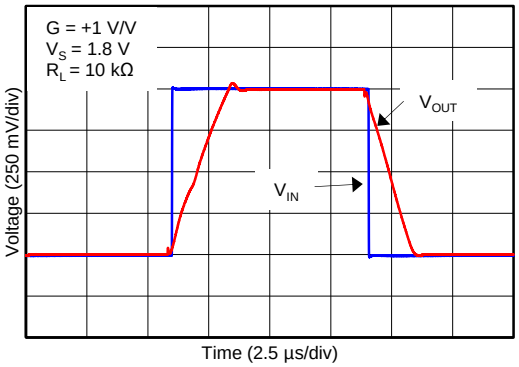

Figure 15. Large-Signal Pulse Response (Minimum Supply)

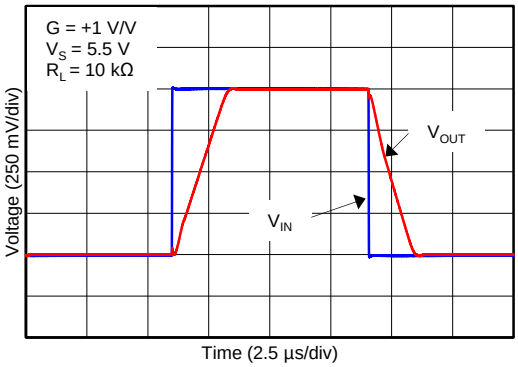

Figure 16. Large-Signal Pulse Response (Maximum Supply)

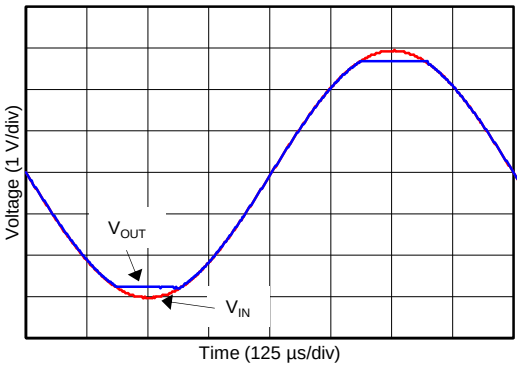

Figure 17. No Phase Reversal

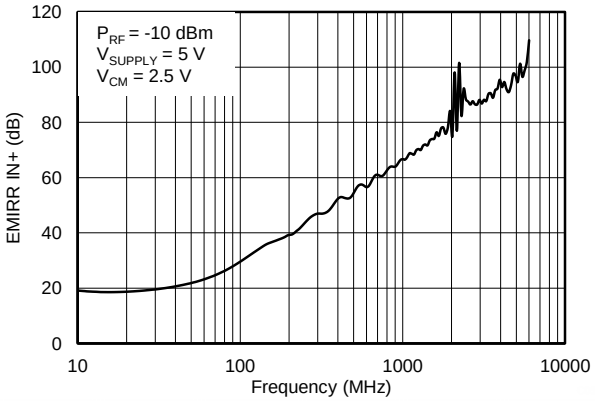

Figure 18. EMIRR IN+ vs Frequency

Copyright © 2016–2017, Texas Instruments Incorporated

8 Detailed Description

8.1 Overview

The TLVx313 family of operational amplifiers are general-purpose devices that are ideal for a wide range of portable, low-cost applications. Rail-to-rail input and output swings, low quiescent current, and wide dynamic range make the op amps well-suited for driving sampling analog-to-digital converters (ADCs) as well as other single-supply applications.

8.2 Functional Block Diagram

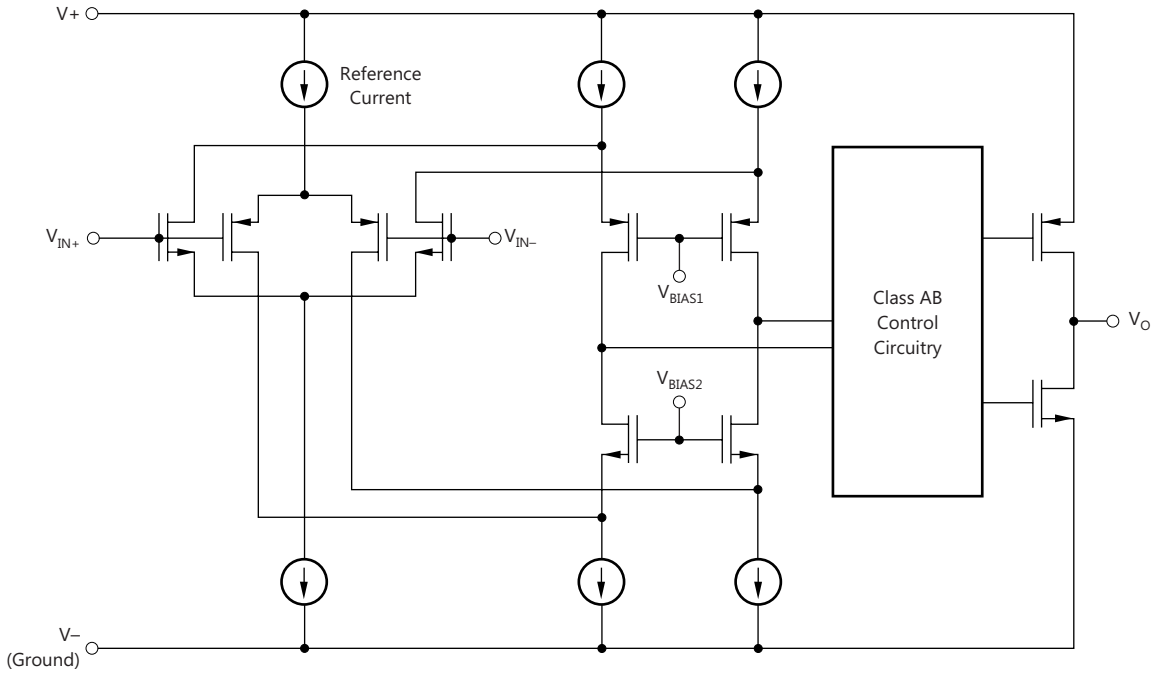

Copyright © 2017, Texas Instruments Incorporated

Copyright © 2016–2017, Texas Instruments Incorporated

8.3 Feature Description

8.3.1 Operating Voltage

The TLV313 series is fully specified and tested from 1.8 V to 5.5 V (±0.9 V to ±2.75 V). Parameters that vary with supply voltage are illustrated in the *Typical Characteristics* section.

8.3.2 Rail-to-Rail Input

The input common-mode voltage range of the TLV313 series extends 200 mV beyond the supply rails. This performance is achieved with a complementary input stage: an N-channel input differential pair in parallel with a P-channel differential pair, as shown in the *Functional Block Diagram* section. The N-channel pair is active for input voltages close to the positive rail, typically (V+) – 1.3 V to 200 mV above the positive supply, while the P-channel pair is on for inputs from 200 mV below the negative supply to approximately (V+) – 1.3 V. There is a small transition region, typically (V+) – 1.4 V to (V+) – 1.2 V, in which both pairs are on. This 200-mV transition region may vary up to 300 mV with process variation. Thus, the transition region (both stages on) may range from (V+) – 1.7 V to (V+) – 1.5 V on the low end, up to (V+) – 1.1 V to (V+) – 0.9 V on the high end. Within this transition region, PSRR, CMRR, offset voltage, offset drift, and THD may be degraded compared to device operation outside this region.

8.3.3 Rail-to-Rail Output

Designed as a micro-power, low-noise operational amplifier, the TLV313 device delivers a robust output drive capability. A class AB output stage with common-source transistors is used to achieve full rail-to-rail output swing capability. For resistive loads up to 100 kΩ, the output swings typically to within 5 mV of either supply rail regardless of the power-supply voltage applied. Different load conditions change the ability of the amplifier to swing close to the rails, as shown in Figure 12.

8.3.4 Common-Mode Rejection Ratio (CMRR)

CMRR for the TLV313 device is specified in several ways so the best match for a given application may be used; see the *Electrical Characteristics*. First, the CMRR of the device in the common-mode range below the transition region [V_{CM} < (V+) – 1.3 V] is given. This specification is the best indicator of the capability of the device when the application requires use of one of the differential input pairs. Second, the CMRR over the entire common-mode range is specified at (V_{CM} = –0.2 V to 5.7 V). This last value includes the variations seen through the transition region, as shown in Figure 4.

8.3.5 Capacitive Load and Stability

The TLV313 device is designed to be used in applications where driving a capacitive load is required. As with all op amps, there may be specific instances where the TLV313 device may become unstable. The particular op amp circuit configuration, layout, gain, and output loading are some of the factors to consider when establishing whether or not an amplifier is stable in operation. An op amp in the unity-gain (+1-V/V) buffer configuration that drives a capacitive load exhibits a greater tendency to be unstable than an amplifier operated at a higher noise gain. The capacitive load, in conjunction with the op amp output resistance, creates a pole within the feedback loop that degrades the phase margin. The degradation of the phase margin increases as the capacitive loading increases. When operating in the unity-gain configuration, the TLV313 device remains stable with a pure capacitive load up to approximately 1 nF. The equivalent series resistance (ESR) of some capacitors (C_L greater than 1 μF) is sufficient to alter the phase characteristics in the feedback loop such that the amplifier remains stable. Increasing the amplifier closed-loop gain allows the amplifier to drive increasingly larger capacitance. This increased capability is evident when observing the overshoot response of the amplifier at higher voltage gains.

Copyright © 2016–2017, Texas Instruments Incorporated

Feature Description (continued)

One technique for increasing the capacitive load drive capability of the amplifier when it operates in a unity-gain configuration is to insert a small resistor, typically 10 Ω to 20 Ω, in series with the output, as shown in Figure 19. This resistor significantly reduces the overshoot and ringing associated with large capacitive loads. One possible problem with this technique is that a voltage divider is created with the added series resistor and any resistor connected in parallel with the capacitive load. The voltage divider introduces a gain error at the output that reduces the output swing.

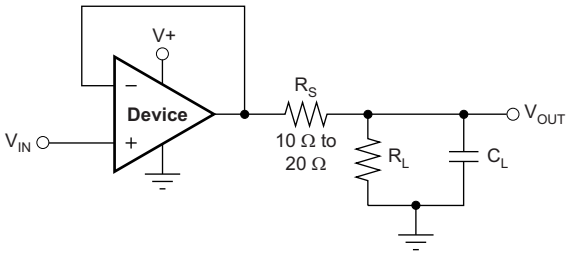

Figure 19. Improving Capacitive Load Drive

8.3.6 EMI Susceptibility and Input Filtering

Operational amplifiers vary with regard to the susceptibility of the device to electromagnetic interference (EMI). If conducted EMI enters the op amp, the dc offset observed at the amplifier output may shift from the nominal value while EMI is present. This shift is a result of signal rectification associated with the internal semiconductor junctions. While all op amp pin functions may be affected by EMI, the signal input pins are likely to be the most susceptible. The TLV313 family incorporates an internal input low-pass filter that reduces the amplifiers response to EMI. Both common-mode and differential mode filtering are provided by this filter. The filter is designed for a cutoff frequency of approximately 35 MHz (–3 dB), with a roll-off of 20 dB per decade.

Texas Instruments has developed the ability to accurately measure and quantify the immunity of an operational amplifier over a broad frequency spectrum extending from 10 MHz to 6 GHz. The EMI rejection ratio (EMIRR) metric allows op amps to be directly compared by the EMI immunity. Figure 18 illustrates the results of this testing on the TLV313 family. Detailed information may be found in *EMI Rejection Ratio of Operational Amplifiers* (SBOA128), available for download from www.ti.com.

8.4 Device Functional Modes

The TLV313 devices have a single functional mode. The devices are powered on as long as the power-supply voltage is between 1.8 V (±0.9 V) and 5.5 V (±2.75 V).

Copyright © 2016–2017, Texas Instruments Incorporated

9 Application and Implementation

NOTE

Information in the following applications sections is not part of the TI component specification, and TI does not warrant its accuracy or completeness. TI's customers are responsible for determining suitability of components for their purposes. Customers should validate and test their design implementation to confirm system functionality.

9.1 Application Information

The TLVx313 devices are a family of low-power, rail-to-rail input and output operational amplifiers specifically designed for portable applications. The devices operate from 1.8 V to 5.5 V, are unity-gain stable, and are suitable for a wide range of general-purpose applications. The class AB output stage is capable of driving ≤ 10-kΩ loads connected to any point between V+ and ground. The input common-mode voltage range includes both rails, and allows the TLV313 family to be used in virtually any single-supply application.

9.2 Typical Application

A typical application for an operational amplifier is an inverting amplifier, as shown in Figure 20. An inverting amplifier takes a positive voltage on the input and outputs a signal inverted to the input, making a negative voltage of the same magnitude. In the same manner, the amplifier also makes negative input voltages positive on the output. In addition, amplification may be added by selecting the input resistor R_I and the feedback resistor R_F.

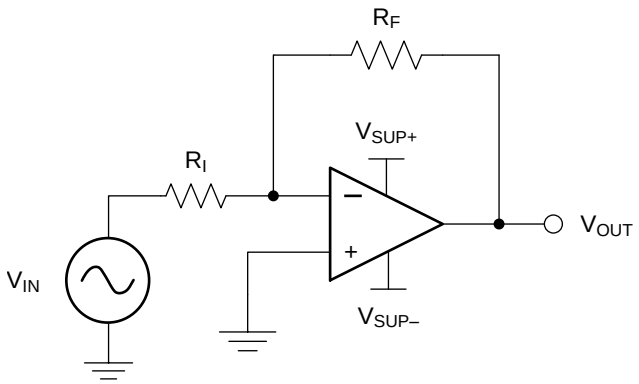

Copyright © 2016, Texas Instruments Incorporated

Figure 20. Application Schematic

9.2.1 Design Requirements

The supply voltage must be chosen to be larger than the input voltage range and the desired output range. The limits of the input common-mode range (V_{CM}) and the output voltage swing to the rails (V_O) must also be considered. For instance, this application scales a signal of ±0.5 V (1 V) to ±1.8 V (3.6 V). Setting the supply at ±2.5 V is sufficient to accommodate this application.

9.2.2 Detailed Design Procedure

Determine the gain required by the inverting amplifier using Equation 1 and Equation 2:

$$A_V = \frac{V_{OUT}}{V_{IN}} \quad (1)$$

$$A_V = \frac{1.8}{-0.5} = -3.6 \quad (2)$$

Typical Application (continued)

When the desired gain is determined, choose a value for R_I or R_F. Choosing a value in the kilohm range is desirable for general-purpose applications because the amplifier circuit uses currents in the milliamp range. This milliamp current range ensures the device does not draw too much current. The trade-off is that very large resistors (100s of kilohms) draw the smallest current but generate the highest noise. Small resistors (100s of ohms) generate low noise but draw high current. This example uses 10 kΩ for R_I, meaning 36 kΩ is used for R_F. The values are determined by Equation 3:

$$A_V = -\frac{R_F}{R_I} \tag{3}$$

9.2.3 Application Curve

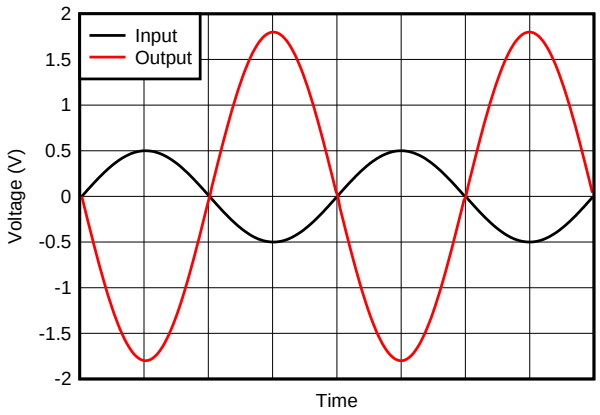

Figure 21. Inverting Amplifier Input and Output

9.3 System Examples

When receiving low-level signals, limiting the bandwidth of the incoming signals into the system is often required. The simplest way to establish this limited bandwidth is to place an RC filter at the noninverting terminal of the amplifier, as shown in Figure 22.

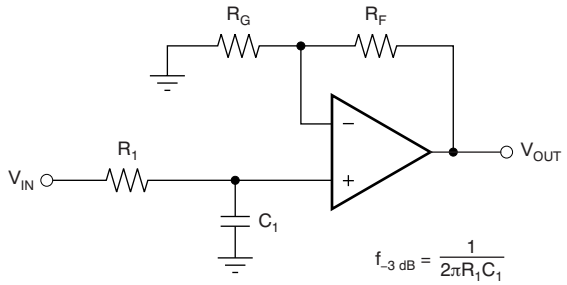

Figure 22. Single-Pole Low-Pass Filter

Copyright © 2016–2017, Texas Instruments Incorporated

System Examples (continued)

If even more attenuation is needed, a multiple pole filter is required. The Sallen-Key filter may be used for this task, as shown in Figure 23. For best results, the amplifier must have a bandwidth that is eight to 10 times the filter frequency bandwidth. Failure to follow this guideline may result in phase shift of the amplifier.

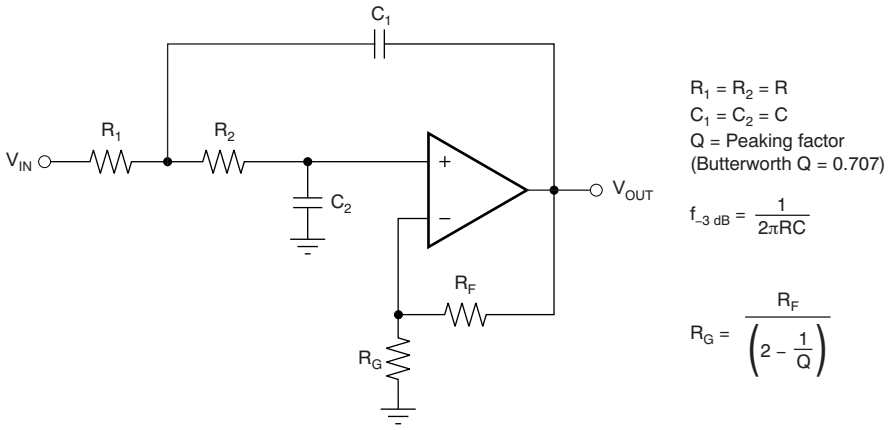

Figure 23. Two-Pole, Low-Pass, Sallen-Key Filter

10 Power Supply Recommendations

The TLVx313 family is specified for operation from 1.8 V to 5.5 V (±0.9 V to ±2.75 V); many specifications apply from –40°C to +125°C. The *Typical Characteristics* section presents parameters that may exhibit significant variance with regard to operating voltage or temperature.

CAUTION

Supply voltages larger than 7 V can permanently damage the device (see the *Absolute Maximum Ratings* table).

Place 0.1-µF bypass capacitors close to the power-supply pins to reduce errors coupling in from noisy or high-impedance power supplies. For more detailed information on bypass capacitor placement, refer to the *Layout Guidelines* section.

10.1 Input and ESD Protection

The TLV313 family incorporates internal electrostatic discharge (ESD) protection circuits on all pins. In the case of input and output pins, this protection primarily consists of current-steering diodes connected between the input and power-supply pins. The ESD protection diodes also provide in-circuit, input overdrive protection, as long as the current is limited to 10 mA as stated in the *Absolute Maximum Ratings*. Figure 24 shows how a series input resistor may be added to the driven input to limit the input current. The added resistor contributes thermal noise at the amplifier input and the value must be kept to a minimum in noise-sensitive applications.

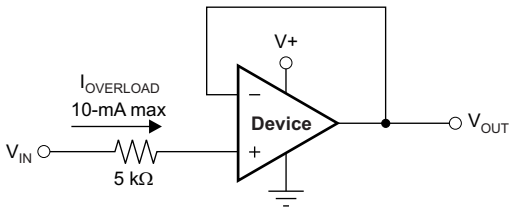

Figure 24. Input Current Protection

Copyright © 2016–2017, Texas Instruments Incorporated

11 Layout

11.1 Layout Guidelines

For best operational performance of the device, use good printed circuit board (PCB) layout practices, including:

- Noise may propagate into analog circuitry through the power pins of the circuit and the operational amplifier. Use bypass capacitors to reduce the coupled noise by providing low-impedance power sources local to the analog circuitry.
  - Connect low-ESR, 0.1-µF ceramic bypass capacitors between each supply pin and ground, placed as close to the device as possible. A single bypass capacitor from V+ to ground is applicable for single-supply applications.
- Separate grounding for analog and digital portions of the circuitry is one of the simplest and most effective methods of noise suppression. One or more layers on multilayer PCBs are usually devoted to ground planes. A ground plane helps distribute heat and reduces EMI noise pickup. Take care to physically separate digital and analog grounds, paying attention to the flow of the ground current. For more detailed information, refer to *Circuit Board Layout Techniques*, (SLOA089).
- To reduce parasitic coupling, run the input traces as far away from the supply or output traces as possible. If the traces cannot be kept separate, crossing the sensitive trace perpendicularly is much better than crossing in parallel with the noisy trace.
- Place the external components as close to the device as possible. Keep R_F and R_G close to the inverting input in order to minimize parasitic capacitance, as shown in Figure 25.
- Keep the length of input traces as short as possible. Remember that the input traces are the most sensitive part of the circuit.
- Consider a driven, low-impedance guard ring around the critical traces. A guard ring may significantly reduce leakage currents from nearby traces that are at different potentials.

11.2 Layout Example

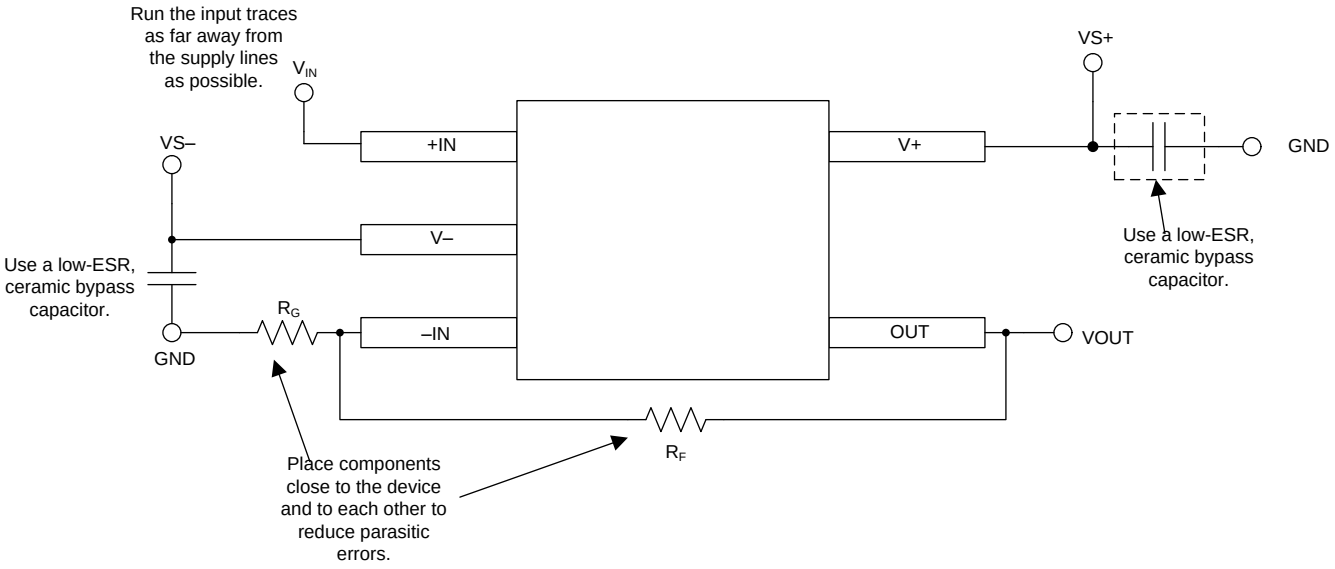

Copyright © 2016, Texas Instruments Incorporated

Figure 25. Operational Amplifier Board Layout for Noninverting Configuration

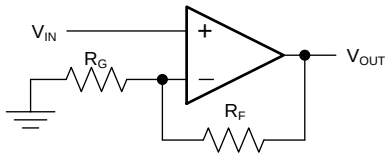

Figure 26. Schematic Representation of Figure 25

Copyright © 2016–2017, Texas Instruments Incorporated

12 デバイスおよびドキュメントのサポート

12.1 ドキュメントのサポート

12.1.1 関連資料

関連資料については、以下を参照してください。

- 『オペアンプのEMI除去率』
- 『基板のレイアウト技法』

12.2 ドキュメントの更新通知を受け取る方法

ドキュメントの更新についての通知を受け取るには、ti.comのデバイス製品フォルダを開いてください。右上の隅にある「通知を受け取る」をクリックして登録すると、変更されたすべての製品情報に関するダイジェストを毎週受け取れます。変更の詳細については、修正されたドキュメントに含まれている改訂履歴をご覧ください。

12.3 関連リンク

表 2 に、クイック・アクセス・リンクの一覧を示します。カテゴリには、技術資料、サポートおよびコミュニティ・リソース、ツールとソフトウェア、およびサンプル注文またはご購入へのクイック・アクセスが含まれます。

表 2. 関連リンク

製品	プロダクト・フォルダ	サンプルとご購入	技術資料	ツールとソフトウェア	サポートとコミュニティ
TLV313	ここをクリック	ここをクリック	ここをクリック	ここをクリック	ここをクリック
TLV2313	ここをクリック	ここをクリック	ここをクリック	ここをクリック	ここをクリック
TLV4313	ここをクリック	ここをクリック	ここをクリック	ここをクリック	ここをクリック

12.4 コミュニティ・リソース

The following links connect to TI community resources. Linked contents are provided "AS IS" by the respective contributors. They do not constitute TI specifications and do not necessarily reflect TI's views; see TI's Terms of Use.

TI E2E™オンライン・コミュニティ ***TIのE2E（Engineer-to-Engineer）コミュニティ。エンジニア間の共同作業を促進するために開設されたものです。e2e.ti.comでは、他のエンジニアに質問し、知識を共有し、アイディアを検討して、問題解決に役立てることができます。***

設計サポート ***TIの設計サポート*** **役に立つE2Eフォーラムや、設計サポート・ツールをすばやく見つけることができます。技術サポート用の連絡先情報も参照できます。**

12.5 商標

E2E is a trademark of Texas Instruments.
All other trademarks are the property of their respective owners.

12.6 静電気放電に関する注意事項

すべての集積回路は、適切なESD保護方法を用いて、取扱いと保存を行うようにして下さい。

静電気放電はわずかな性能の低下から完全なデバイスの故障に至るまで、様々な損傷を与えます。高精度の集積回路は、損傷に対して敏感であり、極めてわずかなパラメータの変化により、デバイスに規定された仕様に適合しなくなる場合があります。

12.7 Glossary

SLYZ022 — *TI Glossary*.

This glossary lists and explains terms, acronyms, and definitions.

13 メカニカル、パッケージ、および注文情報

以降のページには、メカニカル、パッケージ、および注文に関する情報が記載されています。この情報は、そのデバイスについて利用可能な最新のデータです。このデータは予告なく変更されることがあり、ドキュメントが改訂される場合もあります。本データシートのブラウザ版を使用されている場合は、画面左側の説明をご覧ください。

Copyright © 2016–2017, Texas Instruments Incorporated

PACKAGING INFORMATION

Orderable part number	Status (1)	Material type (2)	Package | Pins	Package qty | Carrier	RoHS (3)	Lead finish/ Ball material (4)	MSL rating/ Peak reflow (5)	Op temp (°C)	Part marking (6)
TLV2313IDGKR	Active	Production	VSSOP (DGK) | 8	2500 | LARGE T&R	Yes	NIPDAU | SN | NIPDAUAG	Level-2-260C-1 YEAR	-40 to 125	13AV
TLV2313IDGKR.A	Active	Production	VSSOP (DGK) | 8	2500 | LARGE T&R	Yes	NIPDAU	Level-2-260C-1 YEAR	-40 to 125	13AV
TLV2313IDGKT	Active	Production	VSSOP (DGK) | 8	250 | SMALL T&R	Yes	NIPDAU | SN | NIPDAUAG	Level-2-260C-1 YEAR	-40 to 125	13AV
TLV2313IDGKT.A	Active	Production	VSSOP (DGK) | 8	250 | SMALL T&R	Yes	NIPDAU	Level-2-260C-1 YEAR	-40 to 125	13AV
TLV2313IDR	Active	Production	SOIC (D) | 8	2500 | LARGE T&R	Yes	NIPDAU	Level-2-260C-1 YEAR	-40 to 125	V2313
TLV2313IDR.A	Active	Production	SOIC (D) | 8	2500 | LARGE T&R	Yes	NIPDAU	Level-2-260C-1 YEAR	-40 to 125	V2313
TLV313IDBVR	Active	Production	SOT-23 (DBV) | 5	3000 | LARGE T&R	Yes	NIPDAU | SN	Level-2-260C-1 YEAR	-40 to 125	15F2
TLV313IDBVR.A	Active	Production	SOT-23 (DBV) | 5	3000 | LARGE T&R	Yes	NIPDAU	Level-2-260C-1 YEAR	-40 to 125	15F2
TLV313IDBVT	Active	Production	SOT-23 (DBV) | 5	250 | SMALL T&R	Yes	NIPDAU	Level-2-260C-1 YEAR	-40 to 125	15F2
TLV313IDBVT.A	Active	Production	SOT-23 (DBV) | 5	250 | SMALL T&R	Yes	NIPDAU	Level-2-260C-1 YEAR	-40 to 125	15F2
TLV313IDBVTG4	Active	Production	SOT-23 (DBV) | 5	250 | SMALL T&R	Yes	NIPDAU	Level-1-260C-UNLIM	-40 to 125	15F2
TLV313IDBVTG4.A	Active	Production	SOT-23 (DBV) | 5	250 | SMALL T&R	Yes	NIPDAU	Level-1-260C-UNLIM	-40 to 125	15F2
TLV313IDCKR	Active	Production	SC70 (DCK) | 5	3000 | LARGE T&R	Yes	NIPDAU | SN | POST-PLAT AG SPOT	Level-1-260C-UNLIM	-40 to 125	14E
TLV313IDCKR.A	Active	Production	SC70 (DCK) | 5	3000 | LARGE T&R	Yes	SN	Level-1-260C-UNLIM	-40 to 125	14E
TLV313IDCKRG4	Active	Production	SC70 (DCK) | 5	3000 | LARGE T&R	Yes	NIPDAU	Level-1-260C-UNLIM	-40 to 125	14E
TLV313IDCKRG4.A	Active	Production	SC70 (DCK) | 5	3000 | LARGE T&R	Yes	NIPDAU	Level-1-260C-UNLIM	-40 to 125	14E
TLV313IDCKT	Active	Production	SC70 (DCK) | 5	250 | SMALL T&R	Yes	NIPDAU | POST-PLAT AG SPOT	Level-1-260C-UNLIM	-40 to 125	14E
TLV313IDCKT.A	Active	Production	SC70 (DCK) | 5	250 | SMALL T&R	Yes	POST-PLAT AG SPOT	Level-1-260C-UNLIM	-40 to 125	14E
TLV4313IPWR	Active	Production	TSSOP (PW) | 14	2000 | LARGE T&R	Yes	NIPDAU | SN	Level-2-260C-1 YEAR	-40 to 125	TLV4313
TLV4313IPWR.A	Active	Production	TSSOP (PW) | 14	2000 | LARGE T&R	Yes	NIPDAU	Level-2-260C-1 YEAR	-40 to 125	TLV4313

(1) **Status:** For more details on status, see our product life cycle.

(2) **Material type:** When designated, preproduction parts are prototypes/experimental devices, and are not yet approved or released for full production. Testing and final process, including without limitation quality assurance, reliability performance testing, and/or process qualification, may not yet be complete, and this item is subject to further changes or possible discontinuation. If available for ordering, purchases will be subject to an additional waiver at checkout, and are intended for early internal evaluation purposes only. These items are sold without warranties of any kind.

(3) **RoHS values:** Yes, No, RoHS Exempt. See the TI RoHS Statement for additional information and value definition.

(4) **Lead finish/Ball material:** Parts may have multiple material finish options. Finish options are separated by a vertical ruled line. Lead finish/Ball material values may wrap to two lines if the finish value exceeds the maximum column width.

(5) **MSL rating/Peak reflow:** The moisture sensitivity level ratings and peak solder (reflow) temperatures. In the event that a part has multiple moisture sensitivity ratings, only the lowest level per JEDEC standards is shown. Refer to the shipping label for the actual reflow temperature that will be used to mount the part to the printed circuit board.

(6) **Part marking:** There may be an additional marking, which relates to the logo, the lot trace code information, or the environmental category of the part.

Multiple part markings will be inside parentheses. Only one part marking contained in parentheses and separated by a "~" will appear on a part. If a line is indented then it is a continuation of the previous line and the two combined represent the entire part marking for that device.

Important Information and Disclaimer: The information provided on this page represents TI's knowledge and belief as of the date that it is provided. TI bases its knowledge and belief on information provided by third parties, and makes no representation or warranty as to the accuracy of such information. Efforts are underway to better integrate information from third parties. TI has taken and continues to take reasonable steps to provide representative and accurate information but may not have conducted destructive testing or chemical analysis on incoming materials and chemicals. TI and TI suppliers consider certain information to be proprietary, and thus CAS numbers and other limited information may not be available for release.

In no event shall TI's liability arising out of such information exceed the total purchase price of the TI part(s) at issue in this document sold by TI to Customer on an annual basis.

OTHER QUALIFIED VERSIONS OF TLV2313, TLV313 :

- Automotive : TLV2313-Q1, TLV313-Q1

NOTE: Qualified Version Definitions:

- Automotive - Q100 devices qualified for high-reliability automotive applications targeting zero defects

TAPE AND REEL INFORMATION

REEL DIMENSIONS

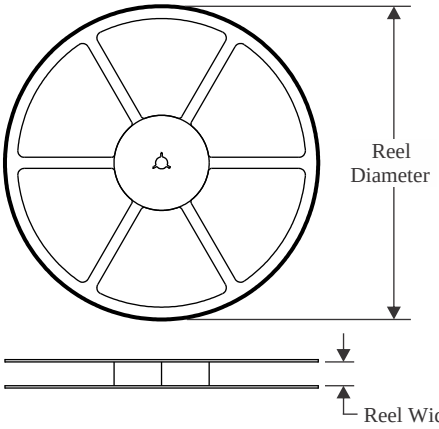

TAPE DIMENSIONS

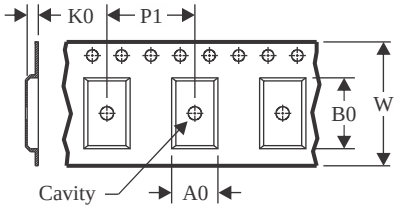

A0	Dimension designed to accommodate the component width
B0	Dimension designed to accommodate the component length
K0	Dimension designed to accommodate the component thickness
W	Overall width of the carrier tape
P1	Pitch between successive cavity centers

QUADRANT ASSIGNMENTS FOR PIN 1 ORIENTATION IN TAPE

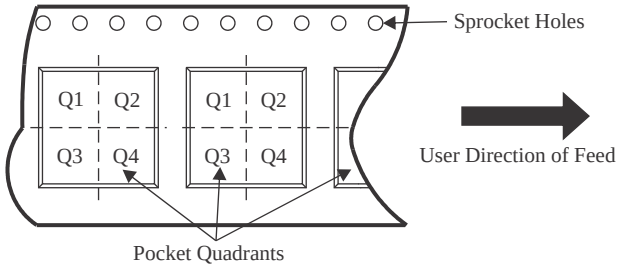

*All dimensions are nominal

Device	Package Type	Package Drawing	Pins	SPQ	Reel Diameter (mm)	Reel Width W1 (mm)	A0 (mm)	B0 (mm)	K0 (mm)	P1 (mm)	W (mm)	Pin1 Quadrant
TLV2313IDGKR	VSSOP	DGK	8	2500	330.0	12.4	5.3	3.4	1.4	8.0	12.0	Q1
TLV2313IDGKR	VSSOP	DGK	8	2500	330.0	12.4	5.25	3.35	1.25	8.0	12.0	Q1
TLV2313IDGKT	VSSOP	DGK	8	250	330.0	12.4	5.3	3.4	1.4	8.0	12.0	Q1
TLV2313IDR	SOIC	D	8	2500	330.0	12.4	6.4	5.2	2.1	8.0	12.0	Q1
TLV313IDBVR	SOT-23	DBV	5	3000	178.0	8.4	3.2	3.2	1.4	4.0	8.0	Q3
TLV313IDBVT	SOT-23	DBV	5	250	180.0	8.4	3.2	3.2	1.4	4.0	8.0	Q3
TLV313IDBVTG4	SOT-23	DBV	5	250	180.0	8.4	3.2	3.2	1.4	4.0	8.0	Q3
TLV313IDCKR	SC70	DCK	5	3000	178.0	9.0	2.4	2.5	1.2	4.0	8.0	Q3
TLV313IDCKR	SC70	DCK	5	3000	178.0	8.4	2.25	2.45	1.2	4.0	8.0	Q3
TLV313IDCKRG4	SC70	DCK	5	3000	178.0	9.0	2.4	2.5	1.2	4.0	8.0	Q3
TLV313IDCKT	SC70	DCK	5	250	178.0	9.0	2.4	2.5	1.2	4.0	8.0	Q3
TLV313IDCKT	SC70	DCK	5	250	180.0	8.4	2.3	2.55	1.2	4.0	8.0	Q3
TLV4313IPWR	TSSOP	PW	14	2000	330.0	12.4	6.9	5.6	1.6	8.0	12.0	Q1

TAPE AND REEL BOX DIMENSIONS

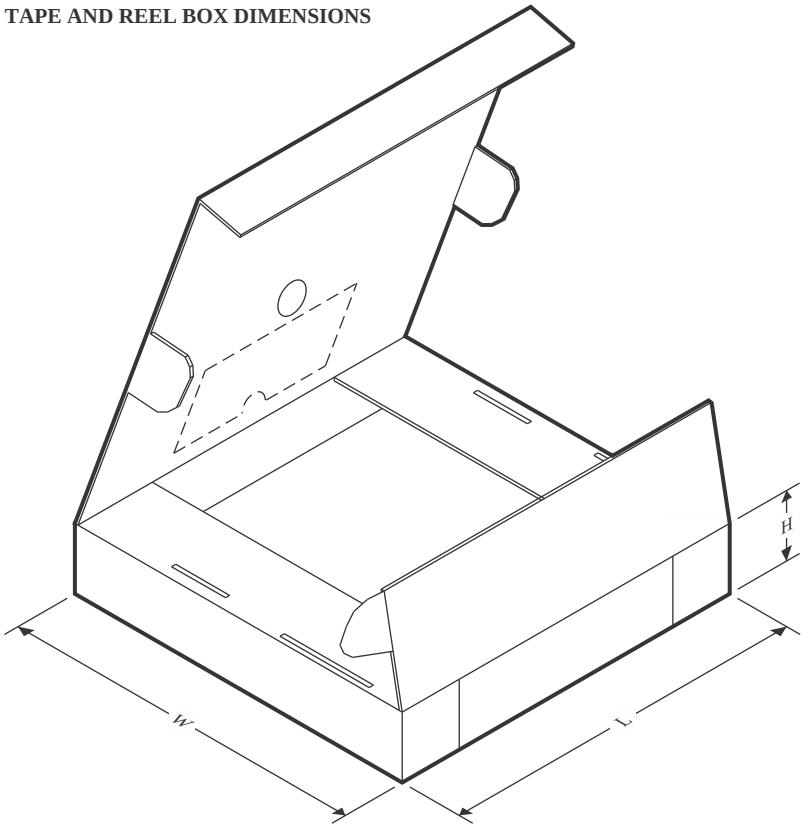

*All dimensions are nominal

Device	Package Type	Package Drawing	Pins	SPQ	Length (mm)	Width (mm)	Height (mm)
TLV2313IDGKR	VSSOP	DGK	8	2500	353.0	353.0	32.0
TLV2313IDGKR	VSSOP	DGK	8	2500	366.0	364.0	50.0
TLV2313IDGKT	VSSOP	DGK	8	250	353.0	353.0	32.0
TLV2313IDR	SOIC	D	8	2500	353.0	353.0	32.0
TLV313IDBVR	SOT-23	DBV	5	3000	208.0	191.0	35.0
TLV313IDBVT	SOT-23	DBV	5	250	210.0	185.0	35.0
TLV313IDBVTG4	SOT-23	DBV	5	250	210.0	185.0	35.0
TLV313IDCKR	SC70	DCK	5	3000	180.0	180.0	18.0
TLV313IDCKR	SC70	DCK	5	3000	208.0	191.0	35.0
TLV313IDCKRG4	SC70	DCK	5	3000	180.0	180.0	18.0
TLV313IDCKT	SC70	DCK	5	250	180.0	180.0	18.0
TLV313IDCKT	SC70	DCK	5	250	210.0	185.0	35.0
TLV4313IPWR	TSSOP	PW	14	2000	356.0	356.0	35.0

PACKAGE OUTLINE

DBV0005A

SOT-23 - 1.45 mm max height

SMALL OUTLINE TRANSISTOR

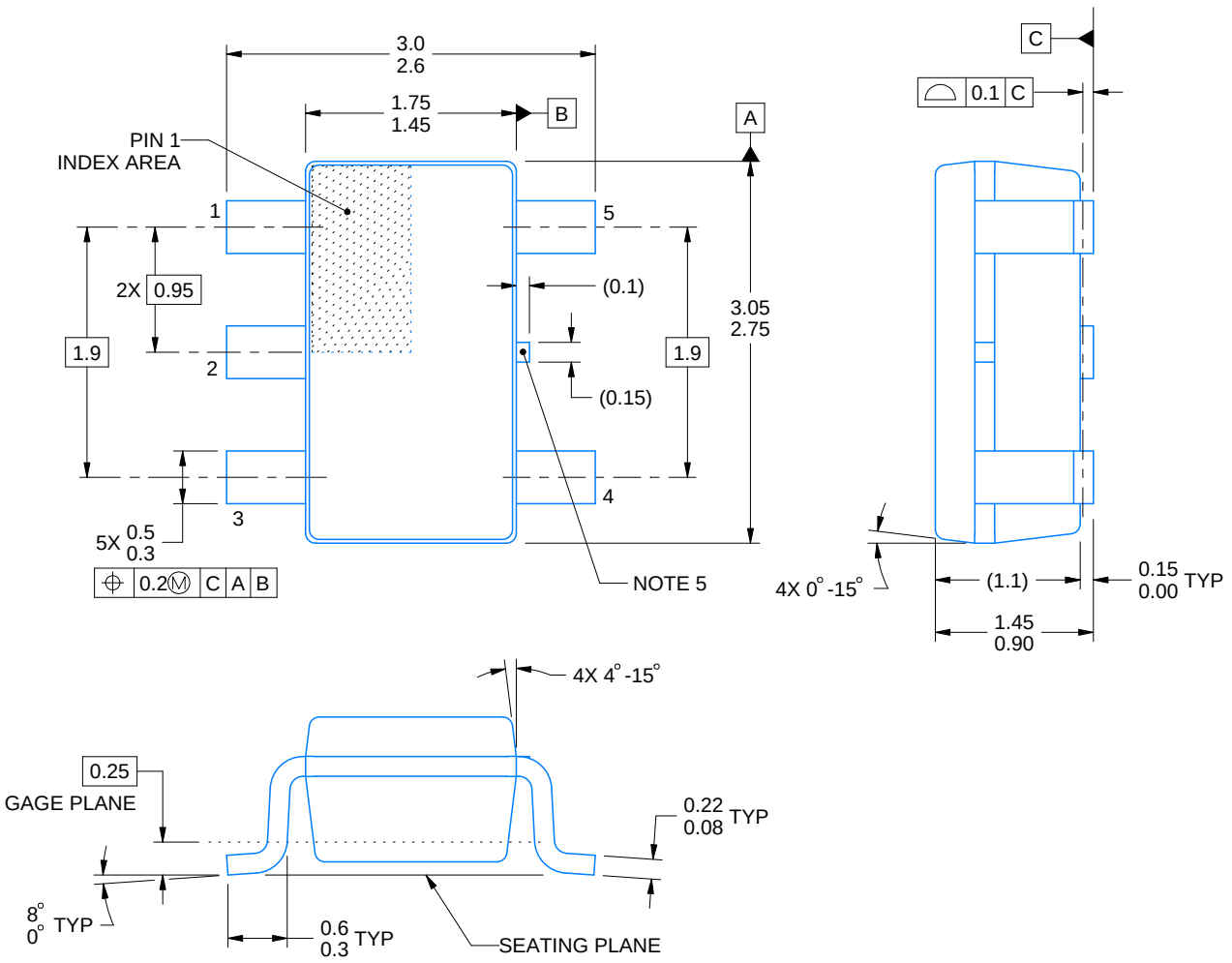

4214839/K 08/2024

NOTES:

1. All linear dimensions are in millimeters. Any dimensions in parenthesis are for reference only. Dimensioning and tolerancing per ASME Y14.5M.
2. This drawing is subject to change without notice.
3. Refernce JEDEC MO-178.
4. Body dimensions do not include mold flash, protrusions, or gate burrs. Mold flash, protrusions, or gate burrs shall not exceed 0.25 mm per side.
5. Support pin may differ or may not be present.

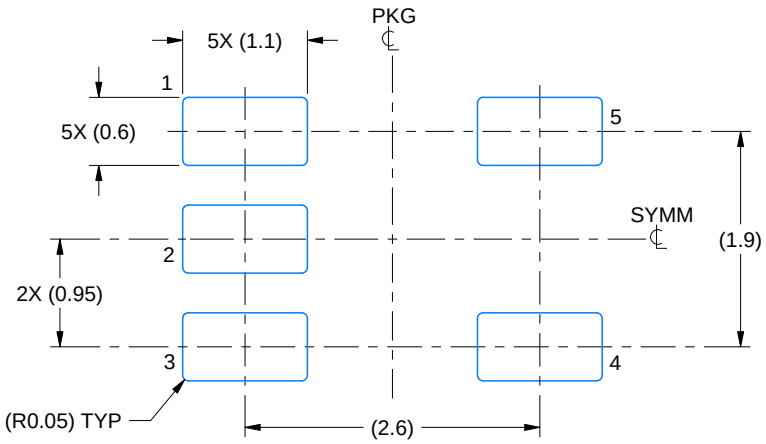

LAND PATTERN EXAMPLE
EXPOSED METAL SHOWN
SCALE:15X

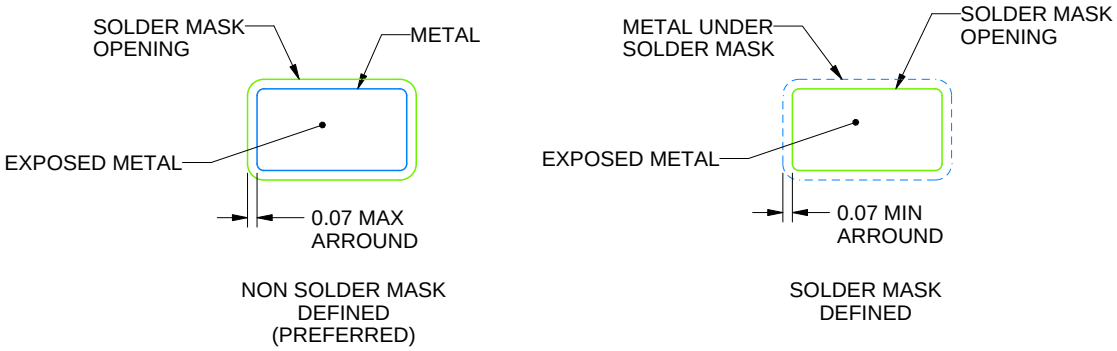

SOLDER MASK DETAILS

4214839/K 08/2024

NOTES: (continued)

6. Publication IPC-7351 may have alternate designs.
7. Solder mask tolerances between and around signal pads can vary based on board fabrication site.

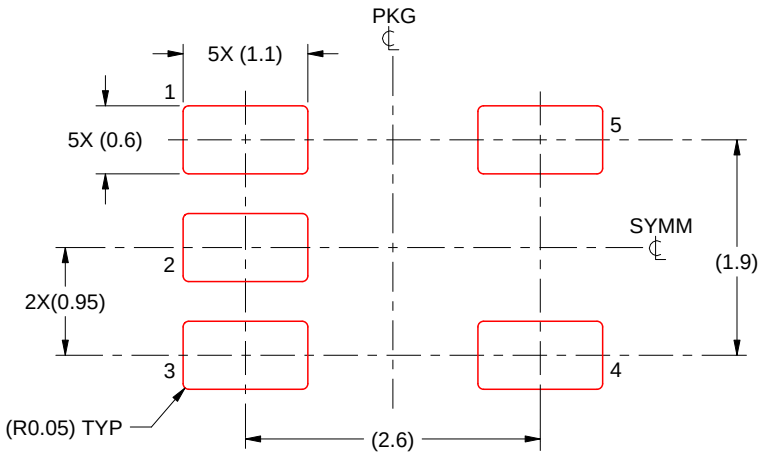

SOLDER PASTE EXAMPLE
BASED ON 0.125 mm THICK STENCIL
SCALE:15X

4214839/K 08/2024

NOTES: (continued)

8. Laser cutting apertures with trapezoidal walls and rounded corners may offer better paste release. IPC-7525 may have alternate design recommendations.
9. Board assembly site may have different recommendations for stencil design.

PACKAGE OUTLINE

DGK0008A

VSSOP - 1.1 mm max height

SMALL OUTLINE PACKAGE

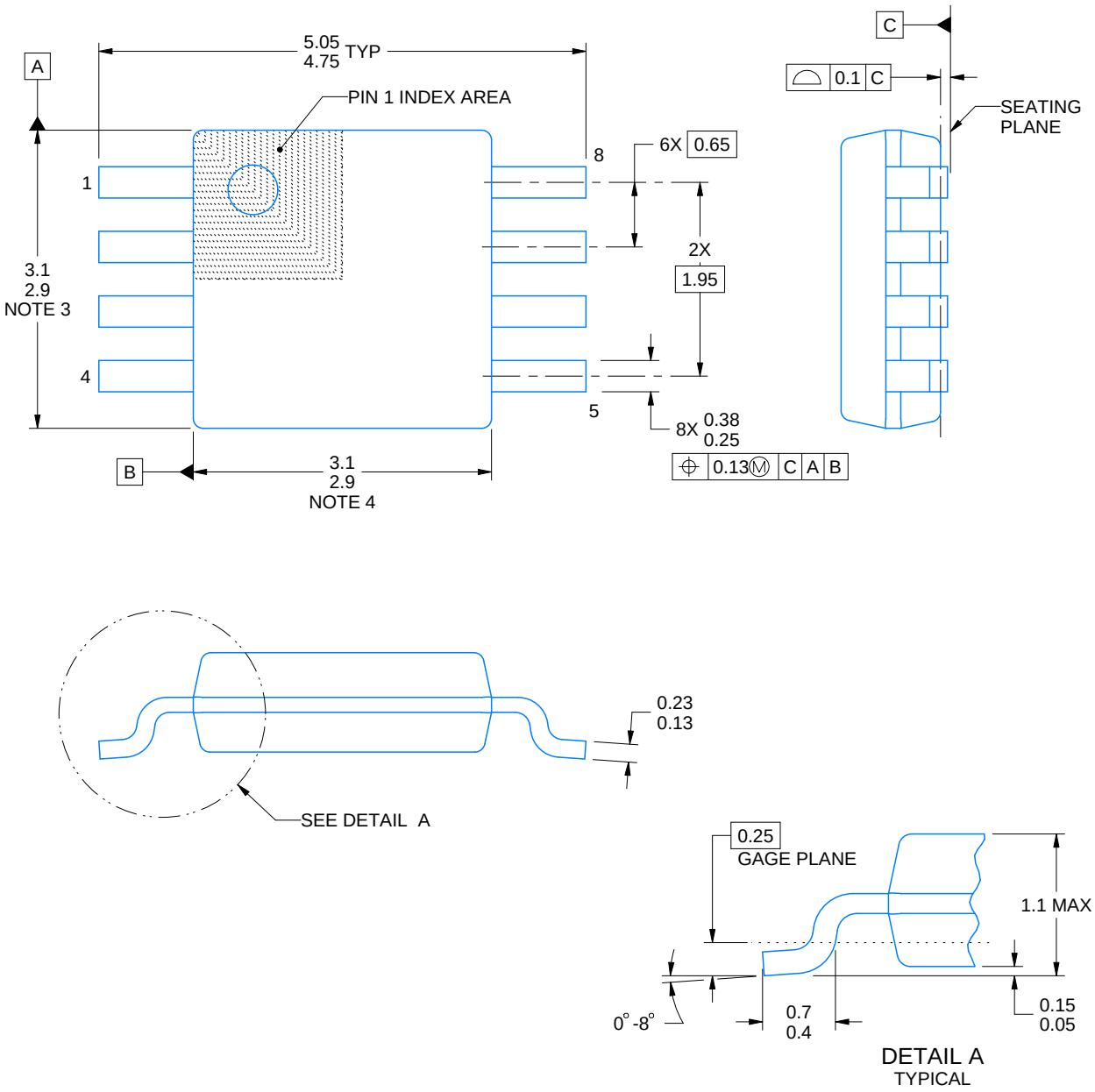

PowerPAD is a trademark of Texas Instruments.

NOTES:

1. All linear dimensions are in millimeters. Any dimensions in parenthesis are for reference only. Dimensioning and tolerancing per ASME Y14.5M.
2. This drawing is subject to change without notice.
3. This dimension does not include mold flash, protrusions, or gate burrs. Mold flash, protrusions, or gate burrs shall not exceed 0.15 mm per side.
4. This dimension does not include interlead flash. Interlead flash shall not exceed 0.25 mm per side.
5. Reference JEDEC registration MO-187.

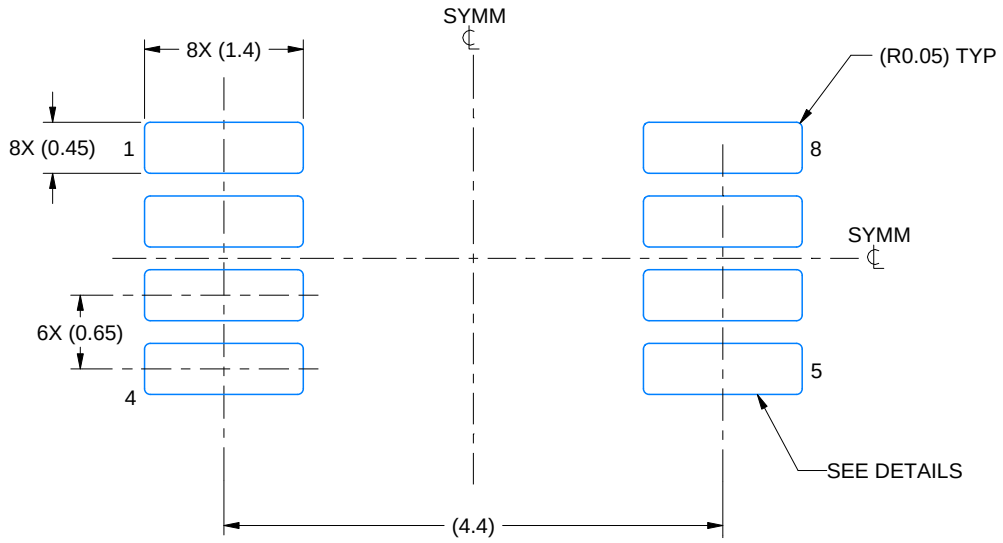

LAND PATTERN EXAMPLE
EXPOSED METAL SHOWN
SCALE: 15X

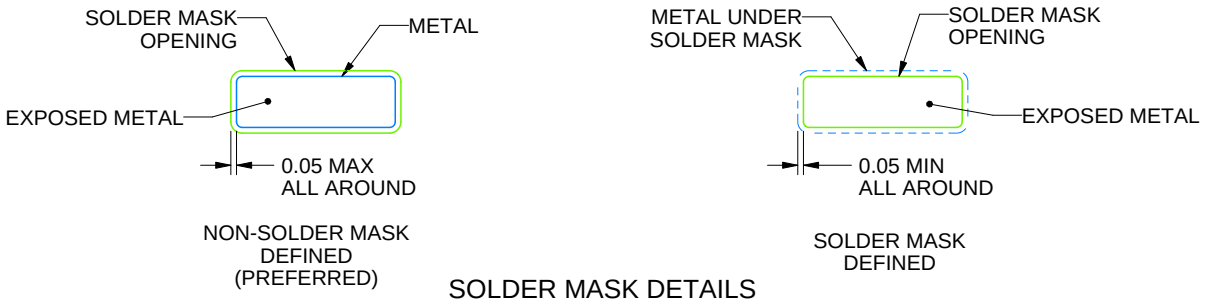

SOLDER MASK DETAILS

4214862/A 04/2023

NOTES: (continued)

6. Publication IPC-7351 may have alternate designs.
7. Solder mask tolerances between and around signal pads can vary based on board fabrication site.
8. Vias are optional depending on application, refer to device data sheet. If any vias are implemented, refer to their locations shown on this view. It is recommended that vias under paste be filled, plugged or tented.
9. Size of metal pad may vary due to creepage requirement.

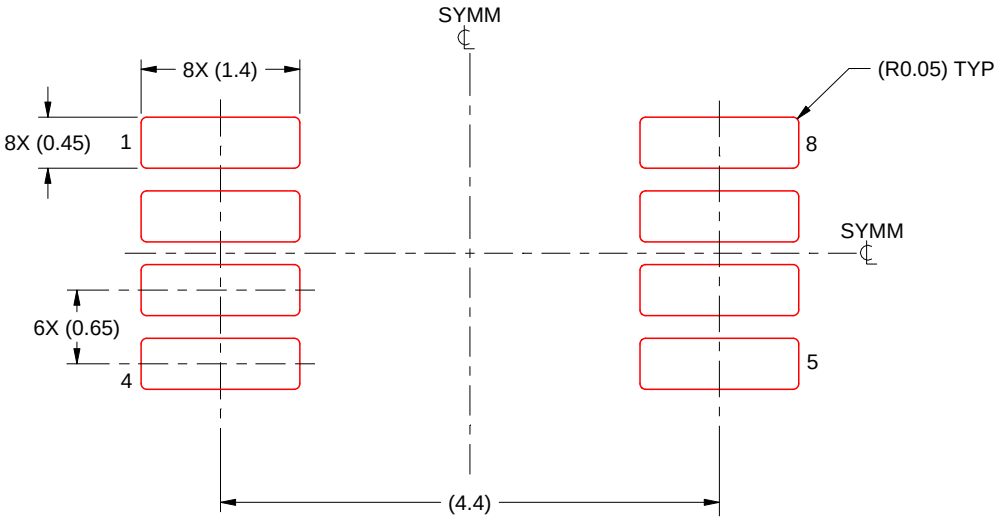

SOLDER PASTE EXAMPLE
SCALE: 15X

4214862/A 04/2023

NOTES: (continued)

11. Laser cutting apertures with trapezoidal walls and rounded corners may offer better paste release. IPC-7525 may have alternate design recommendations.
12. Board assembly site may have different recommendations for stencil design.

PACKAGE OUTLINE

DCK0005A

SOT - 1.1 max height

SMALL OUTLINE TRANSISTOR

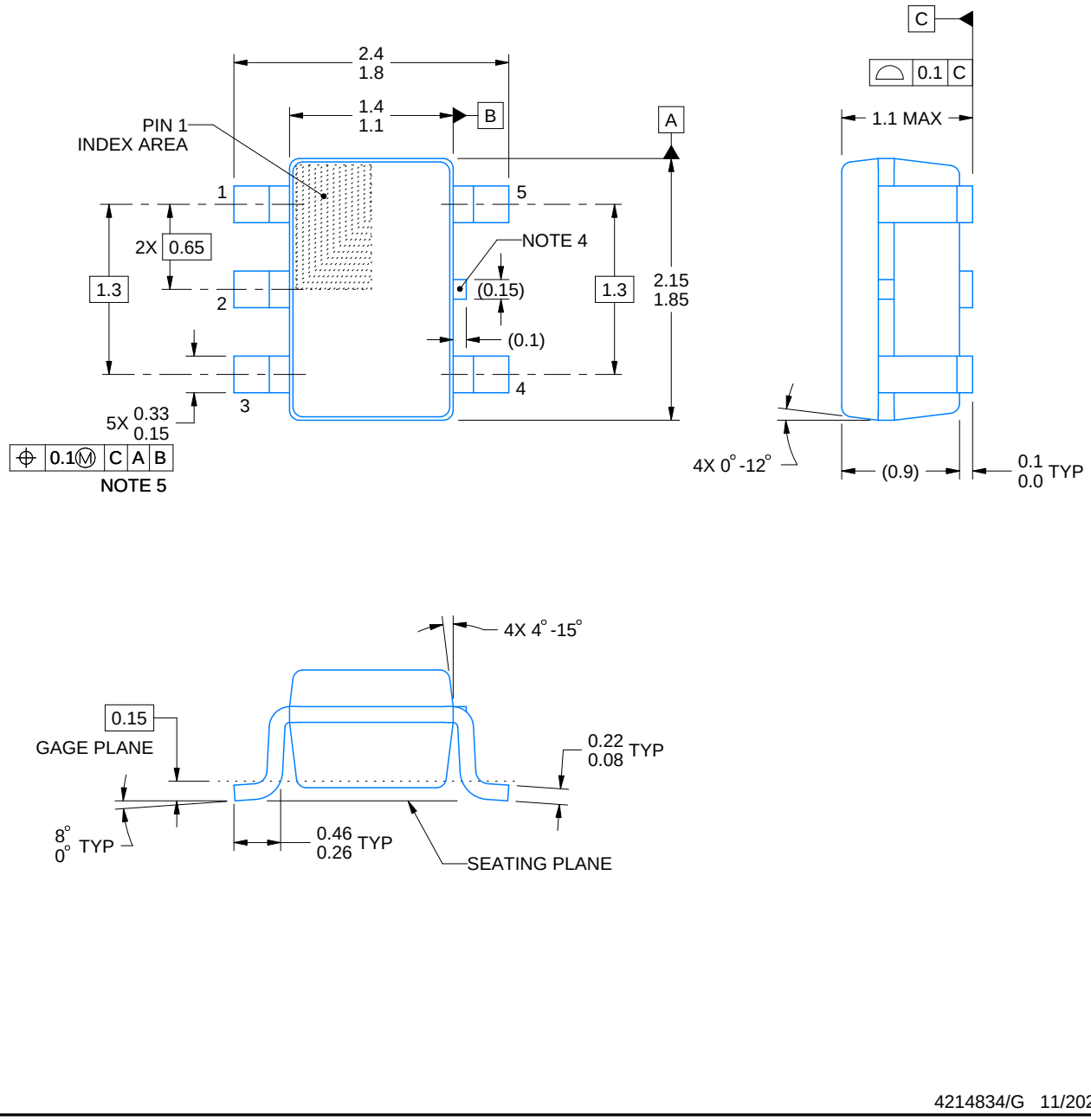

4214834/G 11/2024

NOTES:

1. All linear dimensions are in millimeters. Any dimensions in parenthesis are for reference only. Dimensioning and tolerancing per ASME Y14.5M.
2. This drawing is subject to change without notice.
3. Refernce JEDEC MO-203.
4. Support pin may differ or may not be present.
5. Lead width does not comply with JEDEC.
6. Body dimensions do not include mold flash, protrusions, or gate burrs. Mold flash, protrusions, or gate burrs shall not exceed 0.25mm per side

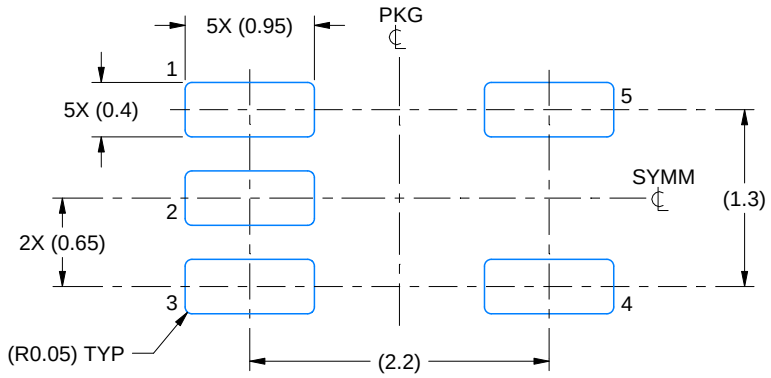

LAND PATTERN EXAMPLE
EXPOSED METAL SHOWN
SCALE:18X

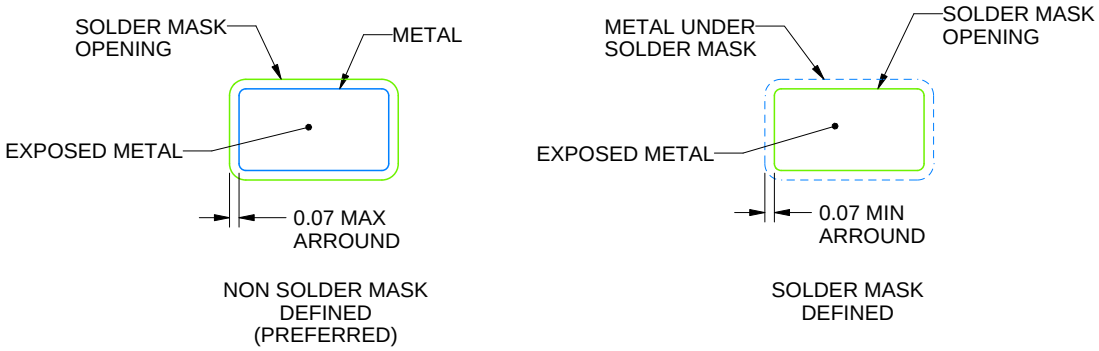

SOLDER MASK DETAILS

4214834/G 11/2024

NOTES: (continued)

7. Publication IPC-7351 may have alternate designs.
8. Solder mask tolerances between and around signal pads can vary based on board fabrication site.

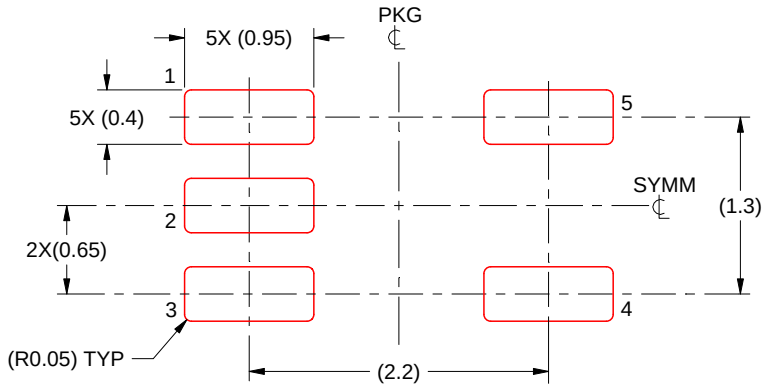

SOLDER PASTE EXAMPLE
BASED ON 0.125 THICK STENCIL
SCALE:18X

4214834/G 11/2024

NOTES: (continued)

9. Laser cutting apertures with trapezoidal walls and rounded corners may offer better paste release. IPC-7525 may have alternate design recommendations.
10. Board assembly site may have different recommendations for stencil design.

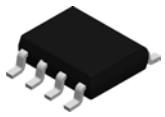

PACKAGE OUTLINE

D0008A

SOIC - 1.75 mm max height

SMALL OUTLINE INTEGRATED CIRCUIT

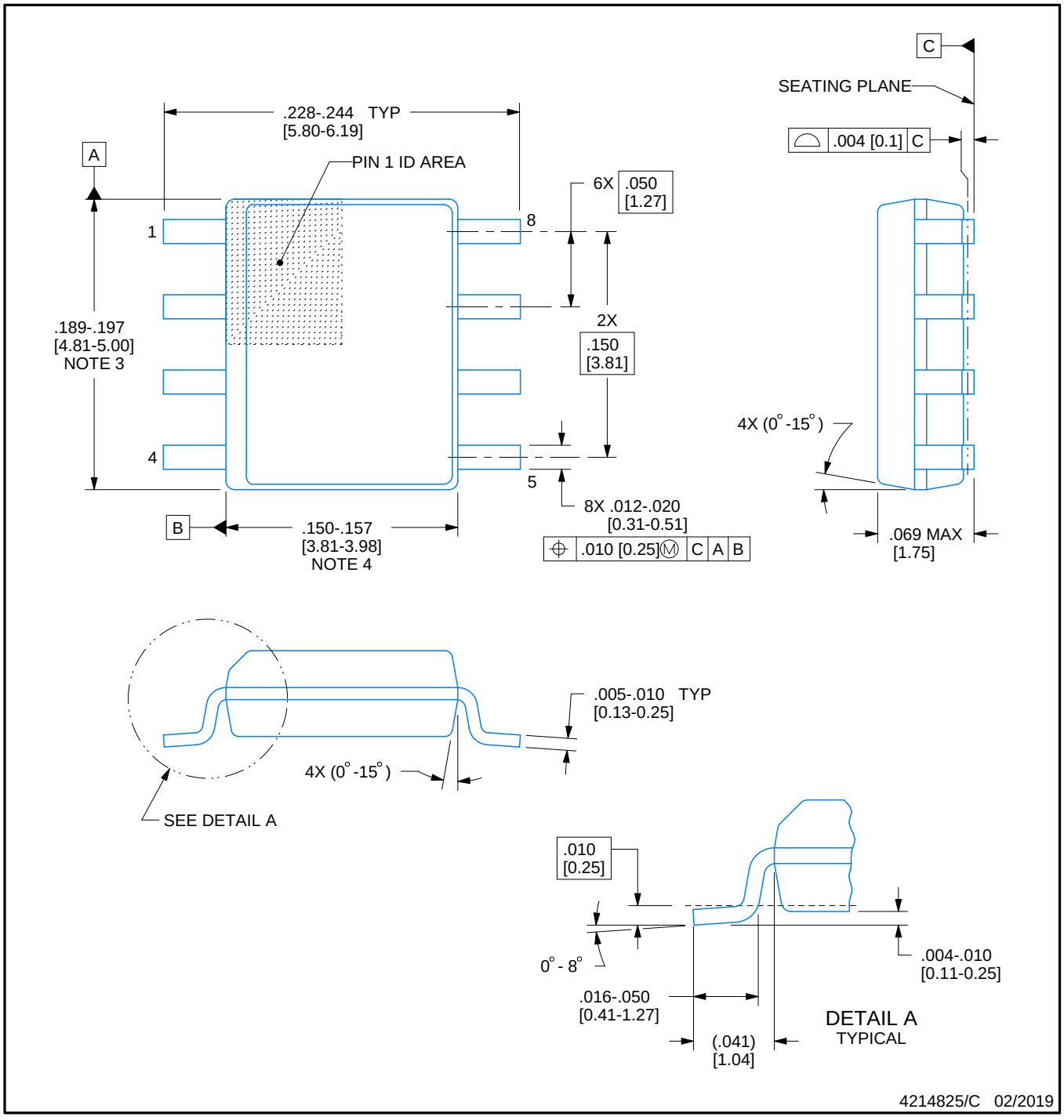

NOTES:

1. Linear dimensions are in inches [millimeters]. Dimensions in parenthesis are for reference only. Controlling dimensions are in inches. Dimensioning and tolerancing per ASME Y14.5M.
2. This drawing is subject to change without notice.
3. This dimension does not include mold flash, protrusions, or gate burrs. Mold flash, protrusions, or gate burrs shall not exceed .006 [0.15] per side.
4. This dimension does not include interlead flash.
5. Reference JEDEC registration MS-012, variation AA.

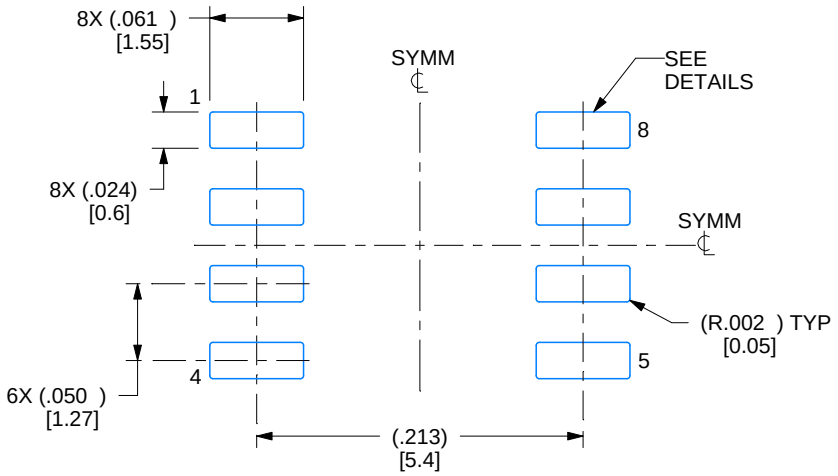

LAND PATTERN EXAMPLE
EXPOSED METAL SHOWN
SCALE:8X

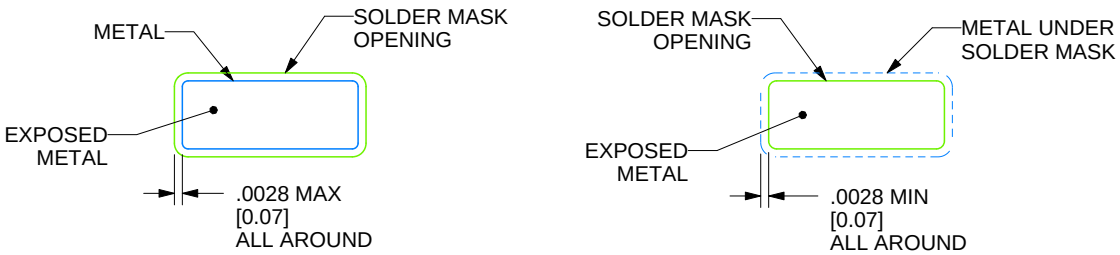

SOLDER MASK DETAILS

4214825/C 02/2019

NOTES: (continued)

6. Publication IPC-7351 may have alternate designs.
7. Solder mask tolerances between and around signal pads can vary based on board fabrication site.

EXAMPLE STENCIL DESIGN

D0008A

SOIC - 1.75 mm max height

SMALL OUTLINE INTEGRATED CIRCUIT

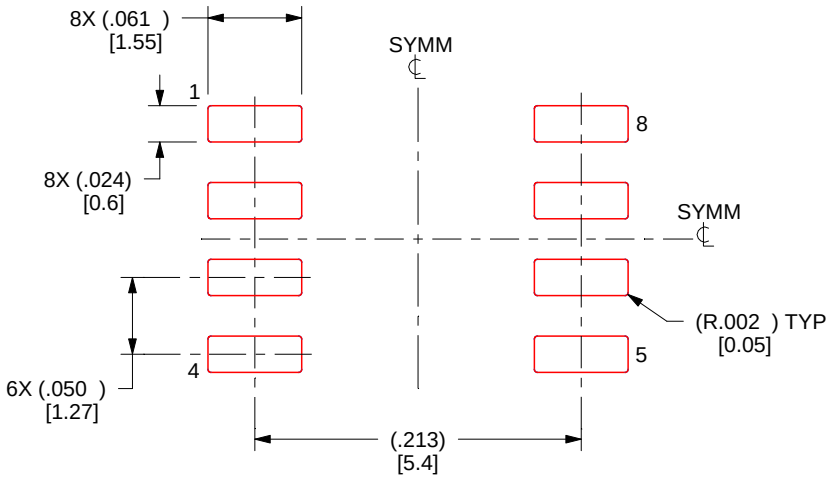

SOLDER PASTE EXAMPLE
BASED ON .005 INCH [0.125 MM] THICK STENCIL
SCALE:8X

4214825/C 02/2019

NOTES: (continued)

8. Laser cutting apertures with trapezoidal walls and rounded corners may offer better paste release. IPC-7525 may have alternate design recommendations.
9. Board assembly site may have different recommendations for stencil design.

PACKAGE OUTLINE

PW0014A

TSSOP - 1.2 mm max height

SMALL OUTLINE PACKAGE

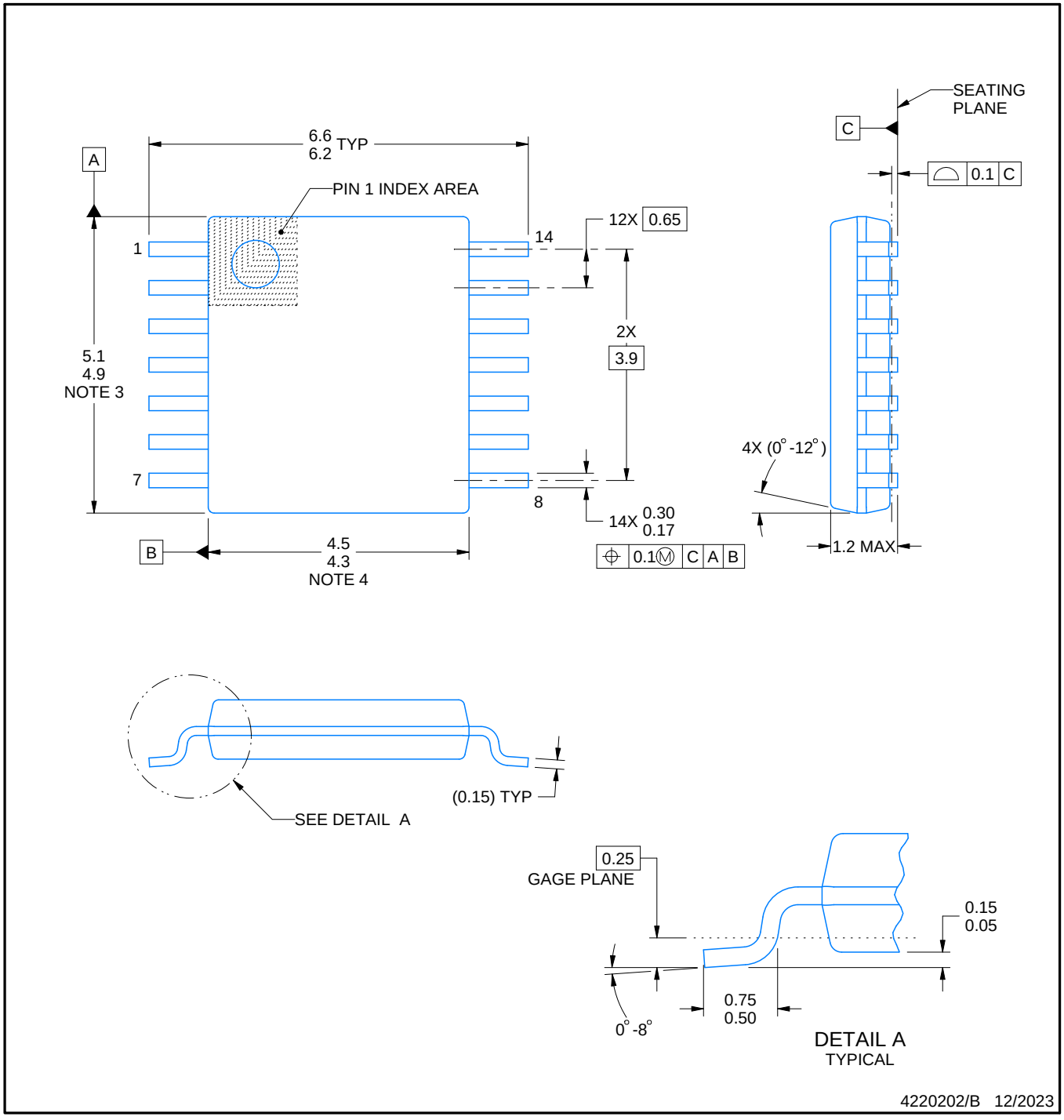

NOTES:

1. All linear dimensions are in millimeters. Any dimensions in parenthesis are for reference only. Dimensioning and tolerancing per ASME Y14.5M.
2. This drawing is subject to change without notice.
3. This dimension does not include mold flash, protrusions, or gate burrs. Mold flash, protrusions, or gate burrs shall not exceed 0.15 mm per side.
4. This dimension does not include interlead flash. Interlead flash shall not exceed 0.25 mm per side.
5. Reference JEDEC registration MO-153.

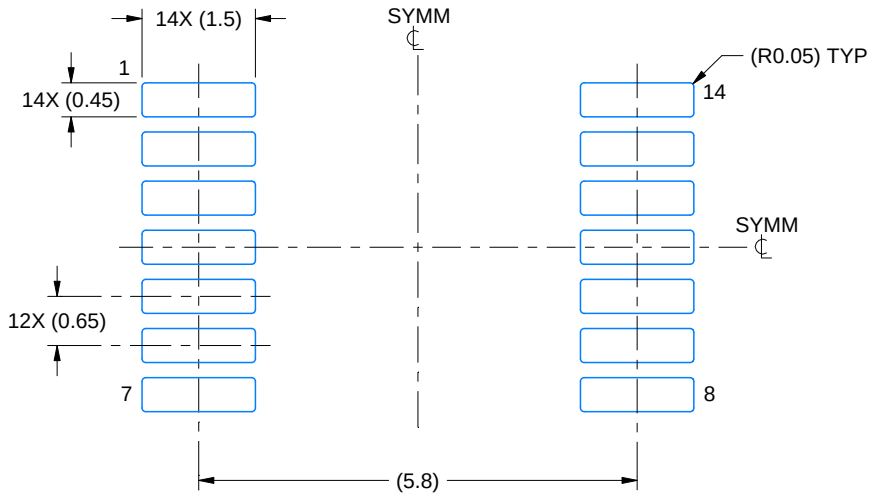

LAND PATTERN EXAMPLE
EXPOSED METAL SHOWN
SCALE: 10X

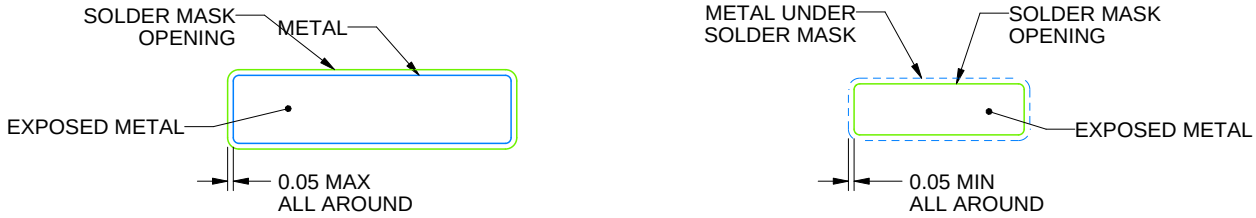

SOLDER MASK DETAILS

4220202/B 12/2023

NOTES: (continued)

6. Publication IPC-7351 may have alternate designs.
7. Solder mask tolerances between and around signal pads can vary based on board fabrication site.

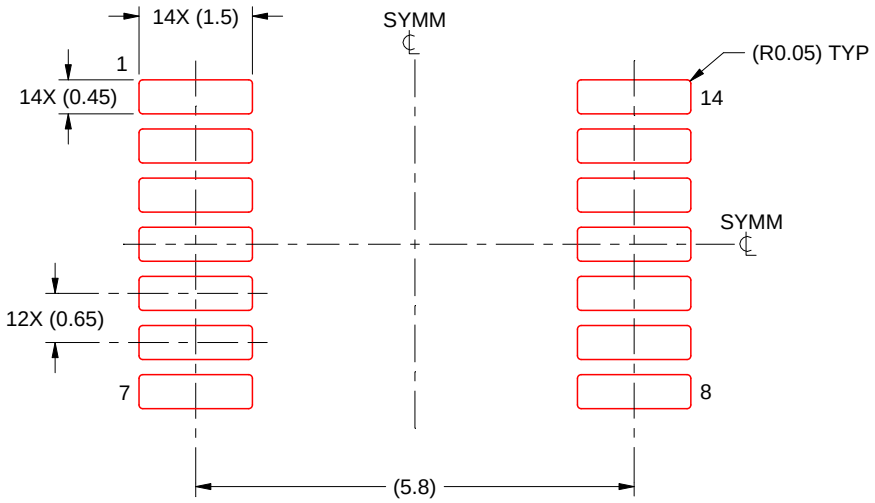

SOLDER PASTE EXAMPLE
BASED ON 0.125 mm THICK STENCIL
SCALE: 10X

4220202/B 12/2023

NOTES: (continued)

8. Laser cutting apertures with trapezoidal walls and rounded corners may offer better paste release. IPC-7525 may have alternate design recommendations.
9. Board assembly site may have different recommendations for stencil design.

重要なお知らせと免責事項

TI は、技術データと信頼性データ (データシートを含みます)、設計リソース (リファレンス デザインを含みます)、アプリケーションや設計に関する各種アドバイス、Web ツール、安全性情報、その他のリソースを、欠陥が存在する可能性のある「現状のまま」提供しており、商品性および特定目的に対する適合性の黙示保証、第三者の知的財産権の非侵害保証を含むいかなる保証も、明示的または黙示的にかかわらず拒否します。

これらのリソースは、TI 製品を使用する設計の経験を積んだ開発者への提供を意図したものです。(1) お客様のアプリケーションに適した TI 製品の選定、(2) お客様のアプリケーションの設計、検証、試験、(3) お客様のアプリケーションに該当する各種規格や、その他のあらゆる安全性、セキュリティ、規制、または他の要件への確実な適合に関する責任を、お客様のみが単独で負うものとします。

上記の各種リソースは、予告なく変更される可能性があります。これらのリソースは、リソースで説明されている TI 製品を使用するアプリケーションの開発の目的でのみ、TI はその使用をお客様に許諾します。これらのリソースに関して、他の目的で複製することや掲載することは禁止されています。TI や第三者の知的財産権のライセンスが付与されている訳ではありません。お客様は、これらのリソースを自身で使用した結果発生するあらゆる申し立て、損害、費用、損失、責任について、TI およびその代理人を完全に補償するものとし、TI は一切の責任を拒否します。

TI の製品は、 TI の販売条件 、 TI の総合的な品質ガイドライン 、 ti.com または TI 製品などに関連して提供される他の適用条件に従い提供されます。TI がこれらのリソースを提供することは、適用される TI の保証または他の保証の放棄の拡大や変更を意味するものではありません。 TI がカスタム、またはカスタマー仕様として明示的に指定していない限り、TI の製品は標準的なカタログに掲載される汎用機器です。

お客様がいかなる追加条項または代替条項を提案する場合も、TI はそれらに異議を唱え、拒否します。

Copyright © 2026, Texas Instruments Incorporated

最終更新日：2025 年 10 月