TMUX1208 5V双方向8:1、1チャネルのマルチプレクサ
TMUX1209 5V双方向4:1、2チャネルのマルチプレクサ

1 特長

- レール・ツー・レールの動作
- 双方向の信号パス
- 低いオン抵抗: 5Ω
- 広い電源電圧範囲: 1.08V～5.5V
- -40℃～+125℃の動作温度範囲
- 1.8Vロジック互換
- フェイルセーフ・ロジック
- 低い消費電流: 10nA
- 遷移時間: 14ns
- Break-Before-Makeのスイッチング動作
- ESD保護(HBM): 2000V
- 業界標準のTSSOPおよびQFNパッケージ

2 アプリケーション

- アナログおよびデジタルの多重化/多重分離
- HVAC: 暖房、換気、および空調
- 煙感知器
- ビデオ監視
- 電子POS
- バッテリ駆動の機器
- 家電製品
- コンシューマ・オーディオ

3 概要

TMUX1208およびTMUX1209は、汎用のCMOS（相補型金属酸化膜半導体）マルチプレクサ(MUX)です。TMUX1208は8:1シングルエンド・チャネルを、TMUX1209は差動4:1またはデュアル4:1シングルエンド・チャネルを提供します。1.08V～5.5Vの広い動作電源電圧範囲により、個人用電子機器からビルディング・オートメーション・アプリケーションまで、幅広い用途に使用可能です。このデバイスは、ソース(Sx)およびドレイン(D)ピンで、GNDからV_{DD}までの範囲の双方向アナログおよびデジタル信号をサポートします。

すべてのロジック入力には1.8Vロジック互換のスレッショルドがあり、有効な電源電圧範囲で動作していれば、TTLとCMOSの両方のロジックと互換性が保証されます。フェイルセーフ・ロジック 回路により、電源ピンよりも前に制御ピンに電圧が印加されるため、デバイスへの損傷の可能性が避けられます。

製品情報(1)

型番	パッケージ	本体サイズ（公称）
TMUX1208 TMUX1209	TSSOP (16)	5.00mm×4.40mm
	QFN (16)	2.60mm×1.80mm

(1) 利用可能なすべてのパッケージについては、このデータシートの末尾にあるパッケージ・オプションについての付録を参照してください。

アプリケーションの例

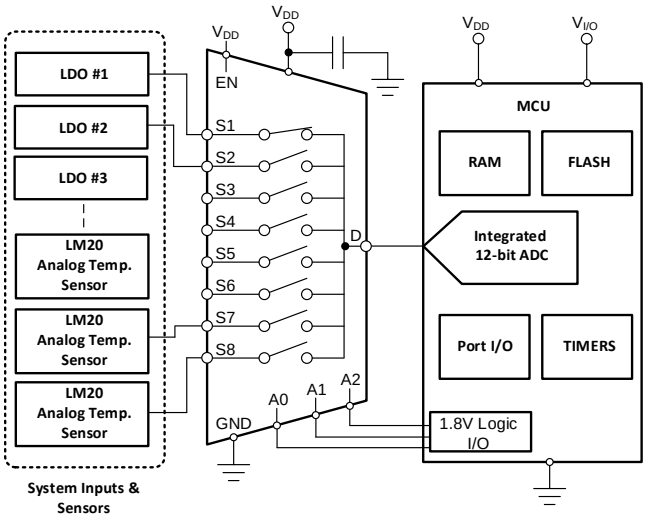

TMUX1208、TMUX1209のブロック図

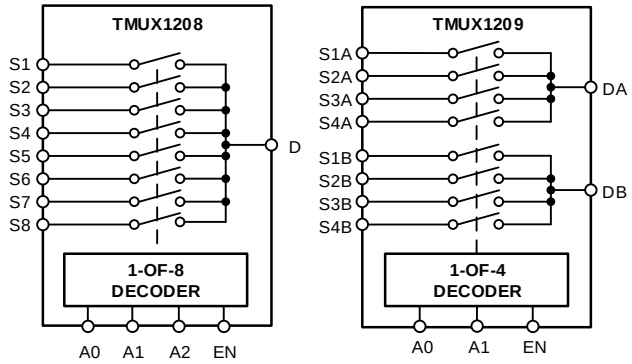

英語版のTI製品についての情報を翻訳したこの資料は、製品の概要を確認する目的で便宜的に提供しているものです。該当する正式な英語版の最新情報は、www.ti.comで閲覧でき、その内容が常に優先されます。TIでは翻訳の正確性および妥当性につきましては一切保証いたしません。実際の設計などの前には、必ず最新版の英語版をご参照くださいますようお願いいたします。

目次

1 特長 ... 1
2 アプリケーション ... 1
3 概要 ... 1
4 改訂履歴 ... 2
5 Device Comparison Table ... 3
6 Pin Configuration and Functions ... 3
7 Specifications ... 5
7.1 Absolute Maximum Ratings ... 5
7.2 ESD Ratings ... 5
7.3 Recommended Operating Conditions ... 5
7.4 Thermal Information ... 5
7.5 Electrical Characteristics (V_{DD} = 5 V ±10 %) ... 6
7.6 Electrical Characteristics (V_{DD} = 3.3 V ±10 %) ... 8
7.7 Electrical Characteristics (V_{DD} = 1.8 V ±10 %) ... 10
7.8 Electrical Characteristics (V_{DD} = 1.2 V ±10 %) ... 12
7.9 Typical Characteristics ... 14
8 Detailed Description ... 15
8.1 Overview ... 15
8.2 Functional Block Diagram ... 20
8.3 Feature Description ... 20
9 Application and Implementation ... 22
9.1 Application Information ... 22
9.2 Typical Application ... 22
9.3 Design Requirements ... 22
9.4 Detailed Design Procedure ... 23
9.5 Application Curve ... 23
10 Power Supply Recommendations ... 23
11 Layout ... 24
11.1 Layout Guidelines ... 24
11.2 Layout Example ... 24
12 デバイスおよびドキュメントのサポート ... 25
12.1 ドキュメントのサポート ... 25
12.2 関連リンク ... 25
12.3 ドキュメントの更新通知を受け取る方法 ... 25
12.4 コミュニティ・リソース ... 25
12.5 商標 ... 25
12.6 静電気放電に関する注意事項 ... 25
12.7 Glossary ... 25
13 メカニカル、パッケージ、および注文情報 ... 25

4 改訂履歴

資料番号末尾の英字は改訂を表しています。その改訂履歴は英語版に準じています。

Revision B (November 2018) から Revision C に変更 — **Page**

- TMUX1209デバイスをデータシートに追加 ... 1

Revision A (September 2018) から Revision B に変更 — **Page**

- Added RSV (QFN) thermal information to *Thermal Information:* table ... 5
- Added footnote to clarify test conditions ... 8

2018年8月発行のものから更新 — **Page**

- ドキュメントのステータスを「*事前情報*」から「*量産データ*」に変更 ... 1

Copyright © 2018, Texas Instruments Incorporated

5 Device Comparison Table

PRODUCT	DESCRIPTION
TMUX1208	8:1, 1-Channel, single-ended multiplexer
TMUX1209	4:1, 2-Channel, differential multiplexer

6 Pin Configuration and Functions

TMUX1208: PW Package
16-Pin TSSOP
Top View

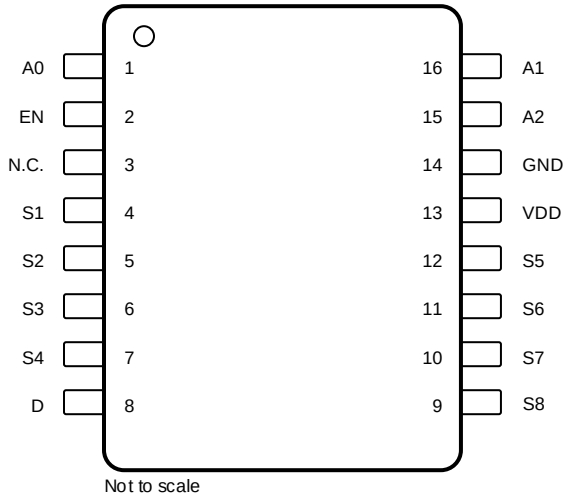

TMUX1208: RSV Package
16-Pin QFN
Top View

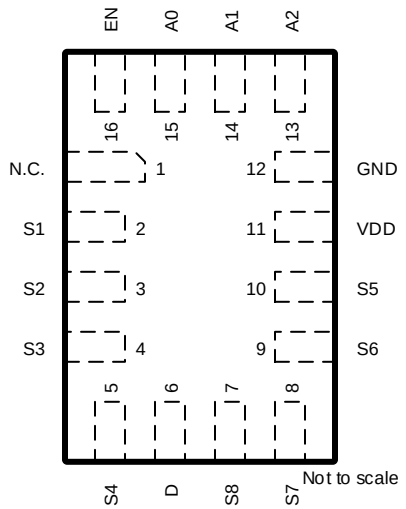

Pin Functions TMUX1208

PIN			TYPE(1)	DESCRIPTION
NAME	TSSOP	UQFN		
A0	1	15	I	Address line 0. Controls the switch configuration as shown in 表 1.
EN	2	16	I	Active high logic input. When this pin is low, all switches are turned off. When this pin is high, the A[2:0] address inputs determine which switch is turned on.
N.C.	3	1	Not Connected	Not Connected
S1	4	2	I/O	Source pin 1. Can be an input or output.
S2	5	3	I/O	Source pin 2. Can be an input or output.
S3	6	4	I/O	Source pin 3. Can be an input or output.
S4	7	5	I/O	Source pin 4. Can be an input or output.
D	8	6	I/O	Drain pin. Can be an input or output.
S8	9	7	I/O	Source pin 8. Can be an input or output.
S7	10	8	I/O	Source pin 7. Can be an input or output.
S6	11	9	I/O	Source pin 6. Can be an input or output.
S5	12	10	I/O	Source pin 5. Can be an input or output.
VDD	13	11	P	Positive power supply. This pin is the most positive power-supply potential. For reliable operation, connect a decoupling capacitor ranging from 0.1 µF to 10 µF between V_{DD} and GND.
GND	14	12	P	Ground (0 V) reference
A2	15	13	I	Address line 2. Controls the switch configuration as shown in 表 1.
A1	16	14	I	Address line 1. Controls the switch configuration as shown in 表 1.

(1) I = input, O = output, I/O = input and output, P = power

Copyright © 2018, Texas Instruments Incorporated

TMUX1209: PW Package
16-Pin TSSOP
Top View

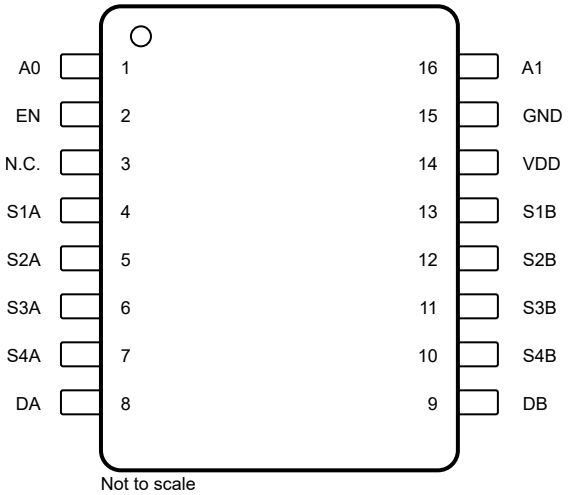

TMUX1209: RSV Package
16-Pin QFN
Top View

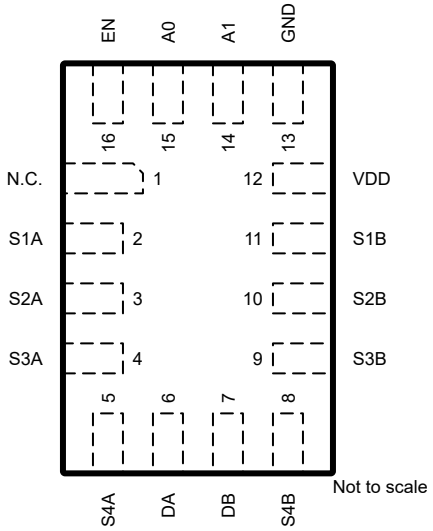

Pin Functions TMUX1209

PIN			TYPE(1)	DESCRIPTION
NAME	TSSOP	UQFN		
A0	1	15	I	Address line 0. Controls the switch configuration as shown in 表 2.
EN	2	16	I	Active high logic input. When this pin is low, all switches are turned off. When this pin is high, the A[1:0] address inputs determine which switch is turned on.
N.C.	3	1	Not Connected	Not Connected
S1A	4	2	I/O	Source pin 1A. Can be an input or output.
S2A	5	3	I/O	Source pin 2A. Can be an input or output.
S3A	6	4	I/O	Source pin 3A. Can be an input or output.
S4A	7	5	I/O	Source pin 4A. Can be an input or output.
DA	8	6	I/O	Drain pin A. Can be an input or output.
DB	9	7	I/O	Drain pin B. Can be an input or output.
S4B	10	8	I/O	Source pin 4B. Can be an input or output.
S3B	11	9	I/O	Source pin 3B. Can be an input or output.
S2B	12	10	I/O	Source pin 2B. Can be an input or output.
S1B	13	11	I/O	Source pin 1B. Can be an input or output.
VDD	14	12	P	Positive power supply. This pin is the most positive power-supply potential. For reliable operation, connect a decoupling capacitor ranging from 0.1 µF to 10 µF between V_{DD} and GND.
GND	15	13	P	Ground (0 V) reference
A1	16	14	I	Address line 1. Controls the switch configuration as shown in 表 2.

(1) I = input, O = output, I/O = input and output, P = power

Copyright © 2018, Texas Instruments Incorporated

7 Specifications

7.1 Absolute Maximum Ratings

over operating free-air temperature range (unless otherwise noted)[(1) (2) (3)]

		MIN	MAX	UNIT
V_{DD}	Supply voltage	–0.3	6	V
V_{SEL} or V_{EN}	Logic control input pin voltage (EN, A0, A1, A2)	–0.3	6	V
I_{SEL} or I_{EN}	Logic control input pin current (EN, A0, A1, A2)	–30	30	mA
V_S or V_D	Source or drain voltage (Sx, D)	–0.5	V_{DD}+0.5	V
I_S or $I_{D\ (CONT)}$	Source or drain continuous current (Sx, D)	–30	30	mA
T_{stg}	Storage temperature	–65	150	°C
T_J	Junction temperature		150	°C

(1) Stresses beyond those listed under *Absolute Maximum Rating* may cause permanent damage to the device. These are stress ratings only, which do not imply functional operation of the device at these or any other conditions beyond those indicated under *Recommended Operating Condition*. Exposure to absolute-maximum-rated conditions for extended periods may affect device reliability.
(2) The algebraic convention, whereby the most negative value is a minimum and the most positive value is a maximum.
(3) All voltages are with respect to ground, unless otherwise specified.

7.2 ESD Ratings

			VALUE	UNIT
$V_{(ESD)}$	Electrostatic discharge	Human body model (HBM), per ANSI/ESDA/JEDEC JS-001, all pins[(1)]	±2000	V
		Charged device model (CDM), per JEDEC specification JESD22-C101, all pins[(2)]	±750	

(1) JEDEC document JEP155 states that 500-V HBM allows safe manufacturing with a standard ESD control process.
(2) JEDEC document JEP157 states that 250-V CDM allows safe manufacturing with a standard ESD control process.

7.3 Recommended Operating Conditions

over operating free-air temperature range (unless otherwise noted)

		MIN	NOM	MAX	UNIT
V_{DD}	Supply voltage	1.08		5.5	V
V_S or V_D	Signal path input/output voltage (source or drain pin) (Sx, D)	0		V_{DD}	V
V_{SEL} or V_{EN}	Logic control input pin voltage (EN, A0, A1, A2)	0		5.5	V
T_A	Ambient temperature	–40		125	°C

7.4 Thermal Information

THERMAL METRIC		TMUX1208 / TMUX1209		UNIT
		PW (TSSOP)	RSV (QFN)	
		16 PINS	16 PINS	
$R_{\theta JA}$	Junction-to-ambient thermal resistance	118.9	134.6	°C/W
$R_{\theta JC(top)}$	Junction-to-case (top) thermal resistance	49.3	74.3	°C/W
$R_{\theta JB}$	Junction-to-board thermal resistance	65.2	62.8	°C/W
Ψ_{JT}	Junction-to-top characterization parameter	7.6	4.3	°C/W
Ψ_{JB}	Junction-to-board characterization parameter	64.6	61.1	°C/W
$R_{\theta JC(bot)}$	Junction-to-case (bottom) thermal resistance	N/A	N/A	°C/W

Copyright © 2018, Texas Instruments Incorporated

7.5 Electrical Characteristics (V_{DD} = 5 V ±10 %)

at T_A = 25°C, V_{DD} = 5 V (unless otherwise noted)

PARAMETER		TEST CONDITIONS	TA	MIN	TYP	MAX	UNIT
ANALOG SWITCH							
R_{ON}	On-resistance	V_S = 0 V to V_{DD} I_{SD} = 10 mA Refer to On-Resistance	25°C		5		Ω
			–40°C to +85°C			7	Ω
			–40°C to +125°C			9	Ω
ΔR_{ON}	On-resistance matching between channels	V_S = 0 V to V_{DD} I_{SD} = 10 mA Refer to On-Resistance	25°C		0.15		Ω
			–40°C to +85°C			1	Ω
			–40°C to +125°C			1	Ω
$R_{ON\ FLAT}$	On-resistance flatness	V_S = 0 V to V_{DD} I_{SD} = 10 mA Refer to On-Resistance	25°C		1.5		Ω
			–40°C to +85°C		2		Ω
			–40°C to +125°C		3		Ω
$I_{S(OFF)}$	Source off leakage current(1)	V_{DD} = 5 V Switch Off V_D = 4.5 V / 1 V V_S = 1 V / 4.5 V Refer to Off-Leakage Current	25°C		±75		nA
			–40°C to +85°C	-150		150	nA
			–40°C to +125°C	-175		175	nA
$I_{D(OFF)}$	Drain off leakage current(1)	V_{DD} = 5 V Switch Off V_D = 4.5 V / 1 V V_S = 1 V / 4.5 V Refer to Off-Leakage Current	25°C		±200		nA
			–40°C to +85°C	-500		500	nA
			–40°C to +125°C	-750		750	nA
$I_{D(ON)}$ $I_{S(ON)}$	Channel on leakage current	V_{DD} = 5 V Switch On V_D = V_S = 4.5 V / 1 V Refer to On-Leakage Current	25°C		±200		nA
			–40°C to +85°C	-500		500	nA
			–40°C to +125°C	-750		750	nA
LOGIC INPUTS (EN, A0, A1, A2)							
V_{IH}	Input logic high		-40°C to 125°C	1.49		5.5	V
V_{IL}	Input logic low		-40°C to 125°C	0		0.87	V
I_{IH} I_{IL}	Input leakage current		25°C		±0.005		µA
I_{IH} I_{IL}	Input leakage current		–40°C to +125°C			±0.10	µA
C_{IN}	Logic input capacitance		25°C		1		pF
C_{IN}	Logic input capacitance		–40°C to +125°C			2	pF
POWER SUPPLY							
I_{DD}	V_{DD} supply current	Logic inputs = 0 V or 5.5 V	25°C		0.02		µA
			–40°C to +125°C			2.7	µA

(1) When V_S is 4.5 V, V_D is 1 V, and vice versa.

Copyright © 2018, Texas Instruments Incorporated

Electrical Characteristics (V_{DD} = 5 V ±10 %) (continued)

at T_A = 25°C, V_{DD} = 5 V (unless otherwise noted)

PARAMETER		TEST CONDITIONS	TA	MIN	TYP	MAX	UNIT
DYNAMIC CHARACTERISTICS							
t_{TRAN}	Transition time between channels	V_S = 3 V R_L = 200 Ω, C_L = 15 pF Refer to Transition Time	25°C		14		ns
			–40°C to +85°C			33	ns
			–40°C to +125°C			33	ns
t_{OPEN} (BBM)	Break before make time	V_S = 3 V R_L = 200 Ω, C_L = 15 pF Refer to Break-Before-Make	25°C		8		ns
			–40°C to +85°C	1			ns
			–40°C to +125°C	1			ns
$t_{ON(EN)}$	Enable turn-on time	V_S = 3 V R_L = 200 Ω, C_L = 15 pF Refer to $t_{ON(EN)}$ and $t_{OFF(EN)}$	25°C		14		ns
			–40°C to +85°C			20	ns
			–40°C to +125°C			20	ns
$t_{OFF(EN)}$	Enable turn-off time	V_S = 3 V R_L = 200 Ω, C_L = 15 pF Refer to $t_{ON(EN)}$ and $t_{OFF(EN)}$	25°C		5		ns
			–40°C to +85°C			20	ns
			–40°C to +125°C			20	ns
Q_C	Charge Injection	V_S = V_{DD}/2 R_S = 0 Ω, C_L = 1 nF Refer to Charge Injection	25°C		±9		pC
O_{ISO}	Off Isolation	R_L = 50 Ω, C_L = 5 pF f = 1 MHz Refer to Off Isolation	25°C		-62		dB
		R_L = 50 Ω, C_L = 5 pF f = 10 MHz Refer to Off Isolation	25°C		-42		dB
X_{TALK}	Crosstalk	R_L = 50 Ω, C_L = 5 pF f = 1 MHz Refer to Crosstalk	25°C		-62		dB
		R_L = 50 Ω, C_L = 5 pF f = 10 MHz Refer to Crosstalk	25°C		-42		dB
BW	Bandwidth - TMUX1208	R_L = 50 Ω, C_L = 5 pF Refer to Bandwidth	25°C		65		MHz
	Bandwidth - TMUX1209	R_L = 50 Ω, C_L = 5 pF Refer to Bandwidth	25°C		125		MHz
C_{SOFF}	Source off capacitance	f = 1 MHz	25°C		13		pF
C_{DOFF}	Drain off capacitance - TMUX1208	f = 1 MHz	25°C		76		pF
	Drain off capacitance - TMUX1209	f = 1 MHz	25°C		38		pF
C_{SON}	On capacitance - TMUX1208	f = 1 MHz	25°C		85		pF
C_{DON}	On capacitance - TMUX1209	f = 1 MHz	25°C		42		pF

Copyright © 2018, Texas Instruments Incorporated

7.6 Electrical Characteristics (V_{DD} = 3.3 V ±10 %)

at T_A = 25°C, V_{DD} = 3.3 V (unless otherwise noted)

PARAMETER		TEST CONDITIONS	TA	MIN	TYP	MAX	UNIT
ANALOG SWITCH							
R_{ON}	On-resistance	V_S = 0 V to V_{DD} I_{SD} = 10 mA Refer to On-Resistance	25°C		9		Ω
			–40°C to +85°C			15	Ω
			–40°C to +125°C			17	Ω
ΔR_{ON}	On-resistance matching between channels	V_S = 0 V to V_{DD} I_{SD} = 10 mA Refer to On-Resistance	25°C		0.15		Ω
			–40°C to +85°C			1	Ω
			–40°C to +125°C			1	Ω
$R_{ON\ FLAT}$	On-resistance flatness	V_S = 0 V to V_{DD} I_{SD} = 10 mA Refer to On-Resistance	25°C		3		Ω
			–40°C to +85°C		5		Ω
			–40°C to +125°C		6		Ω
$I_{S(OFF)}$	Source off leakage current(1)	V_{DD} = 3.3 V Switch Off V_D = 3 V / 1 V V_S = 1 V / 3 V Refer to Off-Leakage Current	25°C		±75		nA
			–40°C to +85°C	-150		150	nA
			–40°C to +125°C	-175		175	nA
$I_{D(OFF)}$	Drain off leakage current(1)	V_{DD} = 3.3 V Switch Off V_D = 3 V / 1 V V_S = 1 V / 3 V Refer to Off-Leakage Current	25°C		±200		nA
			–40°C to +85°C	-500		500	nA
			–40°C to +125°C	-750		750	nA
$I_{D(ON)}$ $I_{S(ON)}$	Channel on leakage current	V_{DD} = 3.3 V Switch On V_D = V_S = 3 V / 1 V Refer to On-Leakage Current	25°C		±200		nA
			–40°C to +85°C	-500		500	nA
			–40°C to +125°C	-750		750	nA
LOGIC INPUTS (EN, A0, A1, A2)							
V_{IH}	Input logic high		-40°C to 125°C	1.35		5.5	V
V_{IL}	Input logic low		-40°C to 125°C	0		0.8	V
I_{IH} I_{IL}	Input leakage current		25°C		±0.005		µA
I_{IH} I_{IL}	Input leakage current		–40°C to +125°C			±0.10	µA
C_{IN}	Logic input capacitance		25°C		1		pF
C_{IN}	Logic input capacitance		–40°C to +125°C			2	pF
POWER SUPPLY							
I_{DD}	V_{DD} supply current	Logic inputs = 0 V or 5.5 V	25°C		0.01		µA
			–40°C to +125°C			1.5	µA

(1) When V_S is 3 V, V_D is 1 V, and vice versa.

Copyright © 2018, Texas Instruments Incorporated

Electrical Characteristics (V_{DD} = 3.3 V ±10 %) (continued)

at T_A = 25°C, V_{DD} = 3.3 V (unless otherwise noted)

PARAMETER		TEST CONDITIONS	TA	MIN	TYP	MAX	UNIT
DYNAMIC CHARACTERISTICS							
t_{TRAN}	Transition time between channels	V_S = 2 V R_L = 200 Ω, C_L = 15 pF Refer to Transition Time	25°C		14		ns
			–40°C to +85°C			25	ns
			–40°C to +125°C			25	ns
t_{OPEN} (BBM)	Break before make time	V_S = 2 V R_L = 200 Ω, C_L = 15 pF Refer to Break-Before-Make	25°C		8		ns
			–40°C to +85°C	1			ns
			–40°C to +125°C	1			ns
$t_{ON(EN)}$	Enable turn-on time	V_S = 2 V R_L = 200 Ω, C_L = 15 pF Refer to $t_{ON(EN)}$ and $t_{OFF(EN)}$	25°C		14		ns
			–40°C to +85°C			25	ns
			–40°C to +125°C			25	ns
$t_{OFF(EN)}$	Enable turn-off time	V_S = 2 V R_L = 200 Ω, C_L = 15 pF Refer to $t_{ON(EN)}$ and $t_{OFF(EN)}$	25°C		7		ns
			–40°C to +85°C			13	ns
			–40°C to +125°C			13	ns
Q_C	Charge Injection	V_S = V_{DD}/2 R_S = 0 Ω, C_L = 1 nF Refer to Charge Injection	25°C		±7		pC
O_{ISO}	Off Isolation	R_L = 50 Ω, C_L = 5 pF f = 1 MHz Refer to Off Isolation	25°C		-62		dB
		R_L = 50 Ω, C_L = 5 pF f = 10 MHz Refer to Off Isolation	25°C		-42		dB
X_{TALK}	Crosstalk	R_L = 50 Ω, C_L = 5 pF f = 1 MHz Refer to Crosstalk	25°C		-62		dB
		R_L = 50 Ω, C_L = 5 pF f = 10 MHz Refer to Crosstalk	25°C		-42		dB
BW	Bandwidth - TMUX1208	R_L = 50 Ω, C_L = 5 pF Refer to Bandwidth	25°C		65		MHz
	Bandwidth - TMUX1209	R_L = 50 Ω, C_L = 5 pF Refer to Bandwidth	25°C		125		MHz
C_{SOFF}	Source off capacitance	f = 1 MHz	25°C		13		pF
C_{DOFF}	Drain off capacitance - TMUX1208	f = 1 MHz	25°C		76		pF
	Drain off capacitance - TMUX1209	f = 1 MHz	25°C		38		pF
C_{SON}	On capacitance - TMUX1208	f = 1 MHz	25°C		85		pF
C_{DON}	On capacitance - TMUX1209	f = 1 MHz	25°C		42		pF

Copyright © 2018, Texas Instruments Incorporated

7.7 Electrical Characteristics (V_{DD} = 1.8 V ±10 %)

at T_A = 25°C, V_{DD} = 1.8 V (unless otherwise noted)

PARAMETER		TEST CONDITIONS	TA	MIN	TYP	MAX	UNIT
ANALOG SWITCH							
R_{ON}	On-resistance	V_S = 0 V to V_{DD} I_{SD} = 10 mA Refer to On-Resistance	25°C		40		Ω
			–40°C to +85°C			80	Ω
			–40°C to +125°C			80	Ω
ΔR_{ON}	On-resistance matching between channels	V_S = 0 V to V_{DD} I_{SD} = 10 mA Refer to On-Resistance	25°C		0.15		Ω
			–40°C to +85°C			1.5	Ω
			–40°C to +125°C			1.5	Ω
$I_{S(OFF)}$	Source off leakage current(1)	V_{DD} = 1.98 V Switch Off V_D = 1.8 V / 1 V V_S = 1 V / 1.8 V Refer to Off-Leakage Current	25°C		±75		nA
			–40°C to +85°C	-150		150	nA
			–40°C to +125°C	-175		175	nA
$I_{D(OFF)}$	Drain off leakage current(1)	V_{DD} = 1.98 V Switch Off V_D = 1.8 V / 1 V V_S = 1 V / 1.8 V Refer to Off-Leakage Current	25°C		±200		nA
			–40°C to +85°C	-500		500	nA
			–40°C to +125°C	-750		750	nA
$I_{D(ON)}$ $I_{S(ON)}$	Channel on leakage current	V_{DD} = 1.98 V Switch On V_D = V_S = 1.8 V / 1 V Refer to On-Leakage Current	25°C		±200		nA
			–40°C to +85°C	-500		500	nA
			–40°C to +125°C	-750		750	nA
LOGIC INPUTS (EN, A0, A1, A2)							
V_{IH}	Input logic high		–40°C to +125°C	1.07		5.5	V
V_{IL}	Input logic low		–40°C to +125°C	0		0.68	V
I_{IH} I_{IL}	Input leakage current		25°C		±0.005		µA
I_{IH} I_{IL}	Input leakage current		–40°C to +125°C			±0.10	µA
C_{IN}	Logic input capacitance		25°C		1		pF
			–40°C to +125°C			2	pF
POWER SUPPLY							
I_{DD}	V_{DD} supply current	Logic inputs = 0 V or 5.5 V	25°C		0.006		µA
			–40°C to +125°C			0.95	µA

(1) When V_S is 1.8 V, V_D is 1 V, and vice versa.

Copyright © 2018, Texas Instruments Incorporated

Electrical Characteristics (V_{DD} = 1.8 V ±10 %) (continued)

at T_A = 25°C, V_{DD} = 1.8 V (unless otherwise noted)

PARAMETER		TEST CONDITIONS	TA	MIN	TYP	MAX	UNIT
DYNAMIC CHARACTERISTICS							
t_{TRAN}	Transition time between channels	V_S = 1 V R_L = 200 Ω, C_L = 15 pF Refer to Transition Time	25°C		28		ns
			–40°C to +85°C			48	ns
			–40°C to +125°C			48	ns
t_{OPEN} (BBM)	Break before make time	V_S = 1 V R_L = 200 Ω, C_L = 15 pF Refer to Break-Before-Make	25°C		16		ns
			–40°C to +85°C	1			ns
			–40°C to +125°C	1			ns
$t_{ON(EN)}$	Enable turn-on time	V_S = 1 V R_L = 200 Ω, C_L = 15 pF Refer to $t_{ON(EN)}$ and $t_{OFF(EN)}$	25°C		28		ns
			–40°C to +85°C			48	ns
			–40°C to +125°C			48	ns
$t_{OFF(EN)}$	Enable turn-off time	V_S = 1 V R_L = 200 Ω, C_L = 15 pF Refer to $t_{ON(EN)}$ and $t_{OFF(EN)}$	25°C		16		ns
			–40°C to +85°C			27	ns
			–40°C to +125°C			27	ns
Q_C	Charge Injection	V_S = V_{DD}/2 R_S = 0 Ω, C_L = 1 nF Refer to Charge Injection	25°C		-2		pC
O_{ISO}	Off Isolation	R_L = 50 Ω, C_L = 5 pF f = 1 MHz Refer to Off Isolation	25°C		-62		dB
		R_L = 50 Ω, C_L = 5 pF f = 10 MHz Refer to Off Isolation	25°C		-42		dB
X_{TALK}	Crosstalk	R_L = 50 Ω, C_L = 5 pF f = 1 MHz Refer to Crosstalk	25°C		-62		dB
		R_L = 50 Ω, C_L = 5 pF f = 10 MHz Refer to Crosstalk	25°C		-42		dB
BW	Bandwidth - TMUX1208	R_L = 50 Ω, C_L = 5 pF Refer to Bandwidth	25°C		65		MHz
	Bandwidth - TMUX1209	R_L = 50 Ω, C_L = 5 pF Refer to Bandwidth	25°C		125		MHz
C_{SOFF}	Source off capacitance	f = 1 MHz	25°C		13		pF
C_{DOFF}	Drain off capacitance - TMUX1208	f = 1 MHz	25°C		76		pF
	Drain off capacitance - TMUX1209	f = 1 MHz	25°C		38		pF
C_{SON}	On capacitance - TMUX1208	f = 1 MHz	25°C		85		pF
C_{DON}	On capacitance - TMUX1209	f = 1 MHz	25°C		42		pF

Copyright © 2018, Texas Instruments Incorporated

7.8 Electrical Characteristics (V_{DD} = 1.2 V ±10 %)

at T_A = 25°C, V_{DD} = 1.2 V (unless otherwise noted)

PARAMETER		TEST CONDITIONS	TA	MIN	TYP	MAX	UNIT
ANALOG SWITCH							
R_{ON}	On-resistance	V_S = 0 V to V_{DD} I_{SD} = 10 mA Refer to On-Resistance	25°C		70		Ω
			–40°C to +85°C			105	Ω
			–40°C to +125°C			105	Ω
ΔR_{ON}	On-resistance matching between channels	V_S = 0 V to V_{DD} I_{SD} = 10 mA Refer to On-Resistance	25°C		0.15		Ω
			–40°C to +85°C			1.5	Ω
			–40°C to +125°C			1.5	Ω
$I_{S(OFF)}$	Source off leakage current(1)	V_{DD} = 1.32 V Switch Off V_D = 1.2 V / 1 V V_S = 1 V / 1.2 V Refer to Off-Leakage Current	25°C		±75		nA
			–40°C to +85°C	-150		150	nA
			–40°C to +125°C	-175		175	nA
$I_{D(OFF)}$	Drain off leakage current(1)	V_{DD} = 1.32 V Switch Off V_D = 1.2 V / 1 V V_S = 1 V / 1.2 V Refer to Off-Leakage Current	25°C		±200		nA
			–40°C to +85°C	-500		500	nA
			–40°C to +125°C	-750		750	nA
$I_{D(ON)}$ $I_{S(ON)}$	Channel on leakage current	V_{DD} = 1.32 V Switch On V_D = V_S = 1.2 V / 1 V Refer to On-Leakage Current	25°C		±200		nA
			–40°C to +85°C	-500		500	nA
			–40°C to +125°C	-750		750	nA
LOGIC INPUTS (EN, A0, A1, A2)							
V_{IH}	Input logic high		–40°C to +125°C	0.96		5.5	V
V_{IL}	Input logic low		–40°C to +125°C	0		0.36	V
I_{IH} I_{IL}	Input leakage current		25°C		±0.005		µA
I_{IH} I_{IL}	Input leakage current		–40°C to +125°C			±0.10	µA
C_{IN}	Logic input capacitance		25°C		1		pF
			–40°C to +125°C			2	pF
POWER SUPPLY							
I_{DD}	V_{DD} supply current	Logic inputs = 0 V or 5.5 V	25°C		0.005		µA
			–40°C to +125°C			0.8	µA

(1) When V_S is 1.2 V, V_D is 1 V, and vice versa.

Copyright © 2018, Texas Instruments Incorporated

Electrical Characteristics (V_{DD} = 1.2 V ±10 %) (continued)

at T_A = 25°C, V_{DD} = 1.2 V (unless otherwise noted)

PARAMETER		TEST CONDITIONS	TA	MIN	TYP	MAX	UNIT
DYNAMIC CHARACTERISTICS							
t_{TRAN}	Transition time between channels	V_S = 1 V R_L = 200 Ω, C_L = 15 pF Refer to Transition Time	25°C		60		ns
			–40°C to +85°C			210	ns
			–40°C to +125°C			210	ns
t_{OPEN} (BBM)	Break before make time	V_S = 1 V R_L = 200 Ω, C_L = 15 pF Refer to Break-Before-Make	25°C		28		ns
			–40°C to +85°C	1			ns
			–40°C to +125°C	1			ns
$t_{ON(EN)}$	Enable turn-on time	V_S = 1 V R_L = 200 Ω, C_L = 15 pF Refer to $t_{ON(EN)}$ and $t_{OFF(EN)}$	25°C		60		ns
			–40°C to +85°C			190	ns
			–40°C to +125°C			190	ns
$t_{OFF(EN)}$	Enable turn-off time	V_S = 1 V R_L = 200 Ω, C_L = 15 pF Refer to $t_{ON(EN)}$ and $t_{OFF(EN)}$	25°C		45		ns
			–40°C to +85°C			150	ns
			–40°C to +125°C			150	ns
Q_C	Charge Injection	V_S = V_{DD}/2 R_S = 0 Ω, C_L = 1 nF Refer to Charge Injection	25°C		±2		pC
O_{ISO}	Off Isolation	R_L = 50 Ω, C_L = 5 pF f = 1 MHz Refer to Off Isolation	25°C		-62		dB
		R_L = 50 Ω, C_L = 5 pF f = 10 MHz Refer to Off Isolation	25°C		-42		dB
X_{TALK}	Crosstalk	R_L = 50 Ω, C_L = 5 pF f = 1 MHz Refer to Crosstalk	25°C		-62		dB
		R_L = 50 Ω, C_L = 5 pF f = 10 MHz Refer to Crosstalk	25°C		-42		dB
BW	Bandwidth - TMUX1208	R_L = 50 Ω, C_L = 5 pF Refer to Bandwidth	25°C		65		MHz
	Bandwidth - TMUX1209	R_L = 50 Ω, C_L = 5 pF Refer to Bandwidth	25°C		125		MHz
C_{SOFF}	Source off capacitance	f = 1 MHz	25°C		13		pF
C_{DOFF}	Drain off capacitance - TMUX1208	f = 1 MHz	25°C		76		pF
	Drain off capacitance - TMUX1209	f = 1 MHz	25°C		38		pF
C_{SON}	On capacitance - TMUX1208	f = 1 MHz	25°C		85		pF
C_{DON}	On capacitance - TMUX1209	f = 1 MHz	25°C		42		pF

Copyright © 2018, Texas Instruments Incorporated

7.9 Typical Characteristics

at T_A = 25°C, V_{DD} = 5 V (unless otherwise noted)

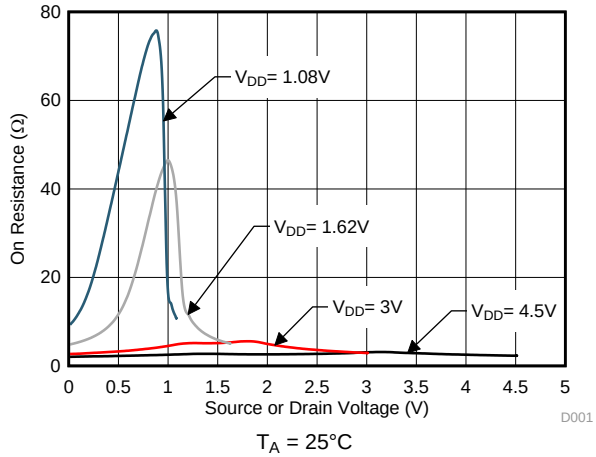

図 1. On-Resistance vs Source or Drain Voltage

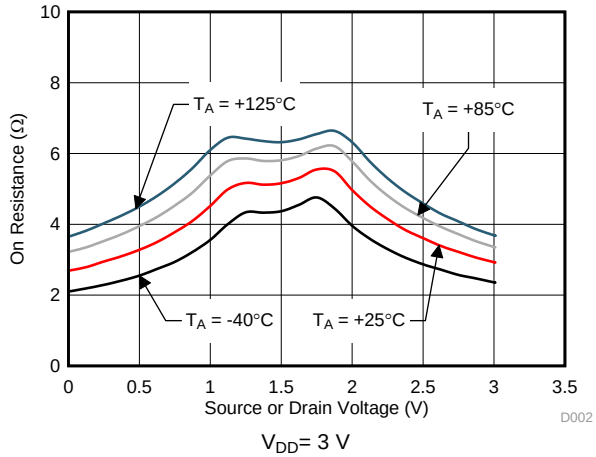

図 2. On-Resistance vs Source or Drain Voltage

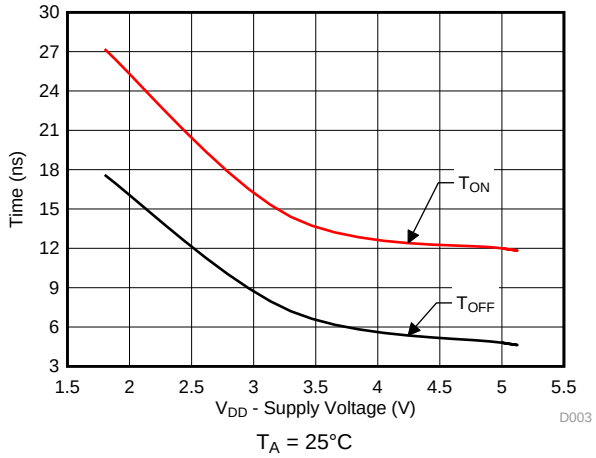

図 3. $T_{ON\ (EN)}$ and $T_{OFF\ (EN)}$ vs Supply Voltage

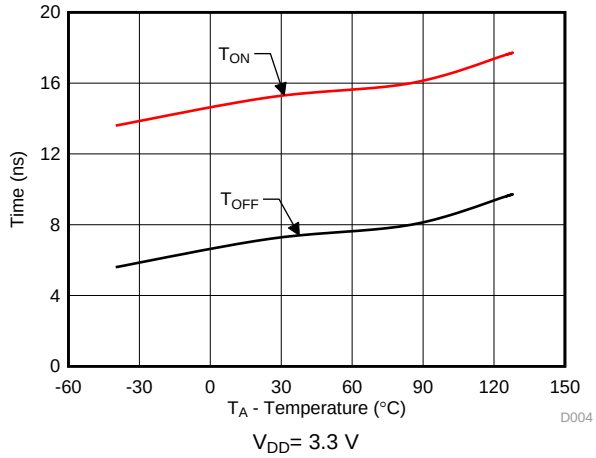

図 4. $T_{ON\ (EN)}$ and $T_{OFF\ (EN)}$ vs Temperature

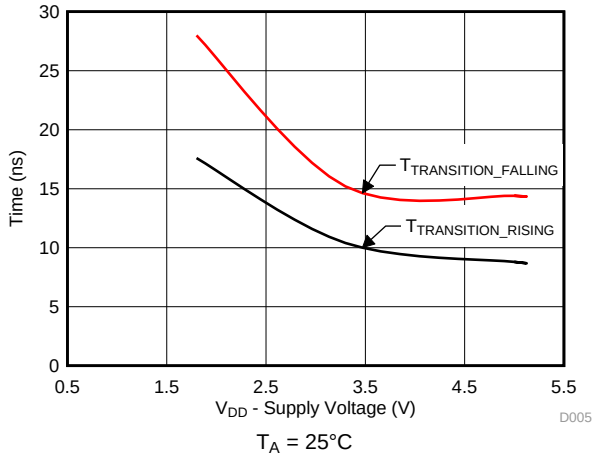

図 5. $T_{TRANSITION}$ vs Supply Voltage

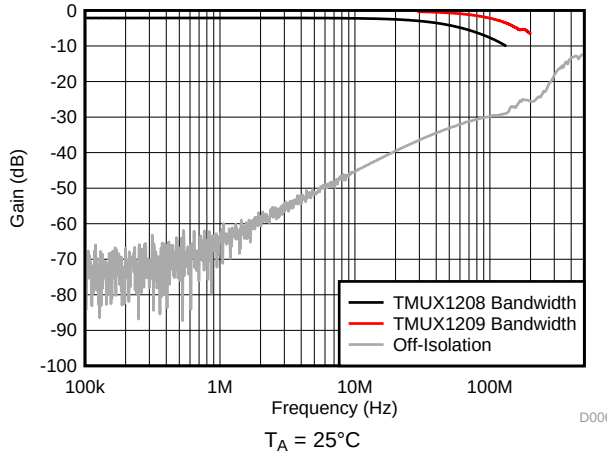

図 6. Frequency Response

Copyright © 2018, Texas Instruments Incorporated

8 Detailed Description

8.1 Overview

8.1.1 On-Resistance

The on-resistance of a device is the ohmic resistance between the source (Sx) and drain (D) pins of the device. The on-resistance varies with input voltage and supply voltage. The symbol R_{ON} is used to denote on-resistance. The measurement setup used to measure R_{ON} is shown below. Voltage (V) and current (I_{SD}) are measured using this setup, and R_{ON} is computed as shown in 図 7 with $R_{ON} = V / I_{SD}$:

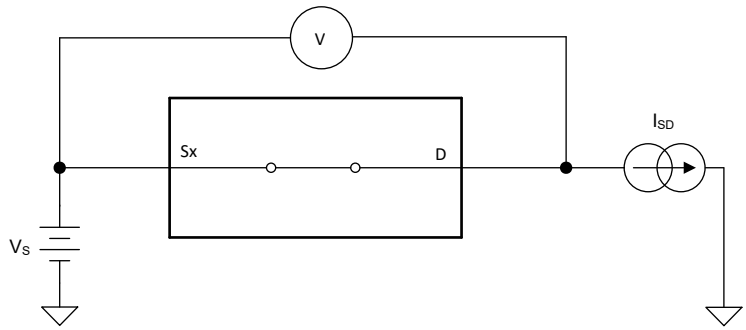

図 7. On-Resistance Measurement Setup

8.1.2 Off-Leakage Current

There are two types of leakage currents associated with a switch during the off state:

1. Source off-leakage current
2. Drain off-leakage current

Source leakage current is defined as the leakage current flowing into or out of the source pin when the switch is off. This current is denoted by the symbol $I_{S(OFF)}$.

Drain leakage current is defined as the leakage current flowing into or out of the drain pin when the switch is off. This current is denoted by the symbol $I_{D(OFF)}$.

The setup used to measure both off-leakage currents is shown in 図 8.

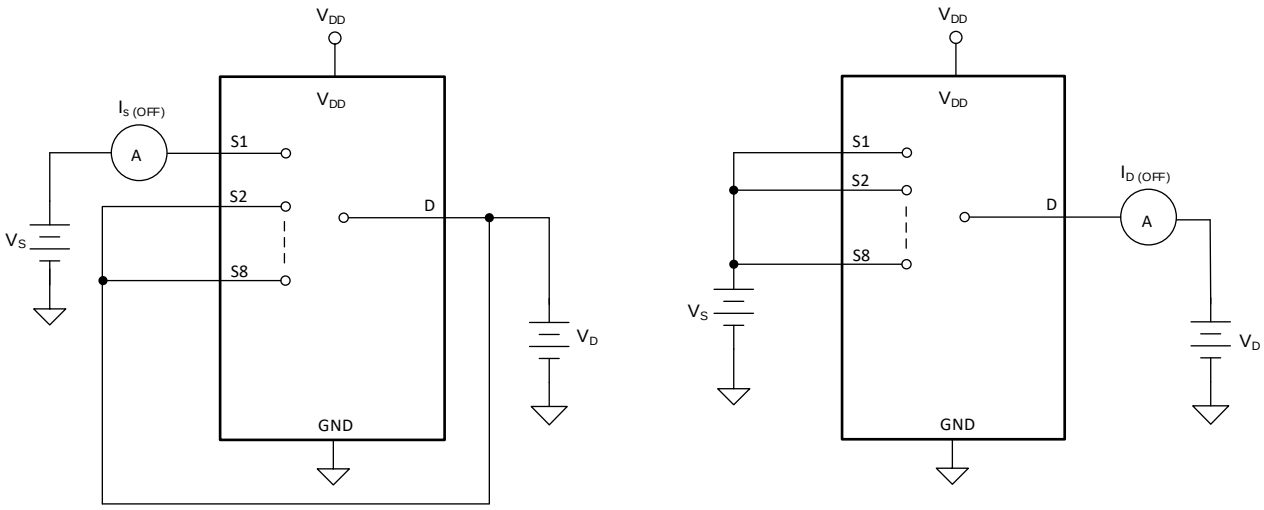

図 8. Off-Leakage Measurement Setup

Overview (continued)

8.1.3 On-Leakage Current

Source on-leakage current is defined as the leakage current flowing into or out of the source pin when the switch is on. This current is denoted by the symbol $I_{S(ON)}$.

Drain on-leakage current is defined as the leakage current flowing into or out of the drain pin when the switch is on. This current is denoted by the symbol $I_{D(ON)}$.

Either the source pin or drain pin is left floating during the measurement. 図 9 shows the circuit used for measuring the on-leakage current, denoted by $I_{S(ON)}$ or $I_{D(ON)}$.

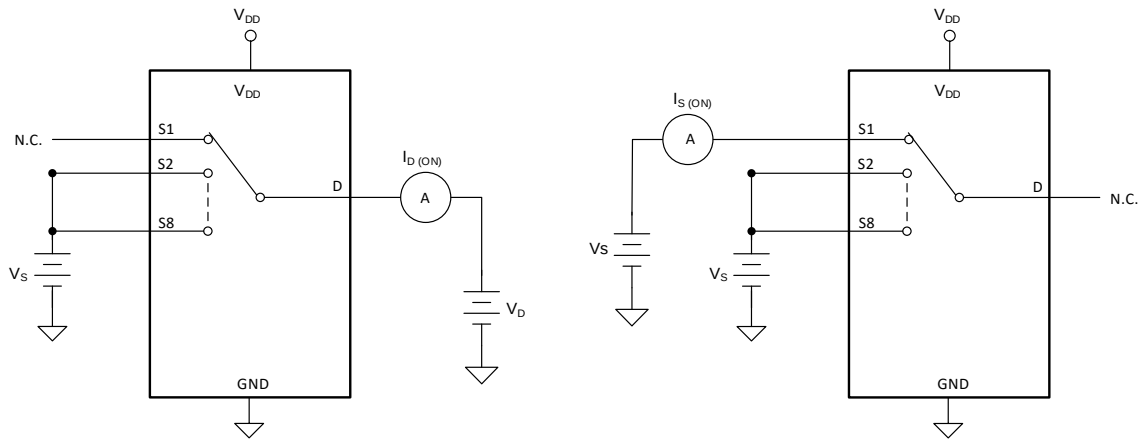

図 9. On-Leakage Measurement Setup

8.1.4 Transition Time

Transition time is defined as the time taken by the output of the device to rise or fall 10% after the address signal has risen or fallen past the logic threshold. The 10% transition measurement is utilized to provide the timing of the device, system level timing can then account for the time constant added from the load resistance and load capacitance. 図 10 shows the setup used to measure transition time, denoted by the symbol $t_{TRANSITION}$.

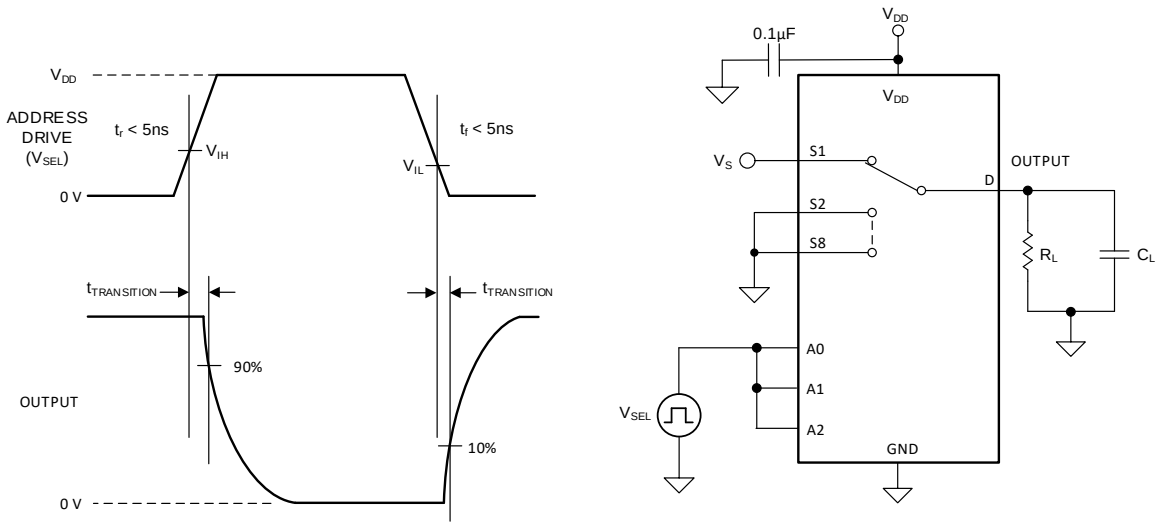

図 10. Transition-Time Measurement Setup

Copyright © 2018, Texas Instruments Incorporated

Overview (continued)

8.1.5 Break-Before-Make

Break-before-make delay is a safety feature that prevents two inputs from connecting when the device is switching. The output first breaks from the on-state switch before making the connection with the next on-state switch. The time delay between the *break* and the *make* is known as break-before-make delay. 図 11 shows the setup used to measure break-before-make delay, denoted by the symbol $t_{OPEN(BBM)}$.

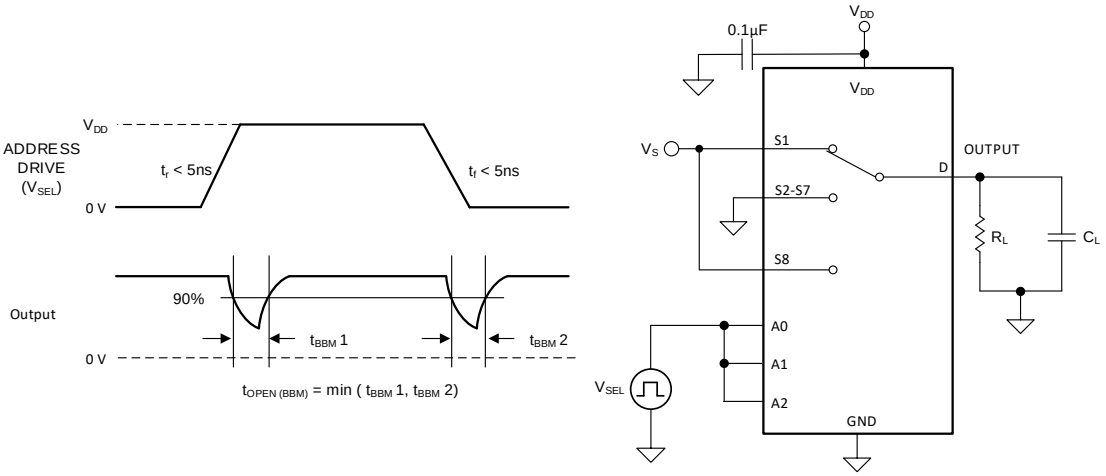

図 11. Break-Before-Make Delay Measurement Setup

8.1.6 $t_{ON(EN)}$ and $t_{OFF(EN)}$

Turn-on time is defined as the time taken by the output of the device to rise to 10% after the enable has risen past the logic threshold. The 10% measurement is utilized to provide the timing of the device, system level timing can then account for the time constant added from the load resistance and load capacitance. 図 12 shows the setup used to measure transition time, denoted by the symbol $t_{ON(EN)}$.

Turn-off time is defined as the time taken by the output of the device to fall to 90% after the enable has fallen past the logic threshold. The 90% measurement is utilized to provide the timing of the device, system level timing can then account for the time constant added from the load resistance and load capacitance. 図 12 shows the setup used to measure transition time, denoted by the symbol $t_{OFF(EN)}$.

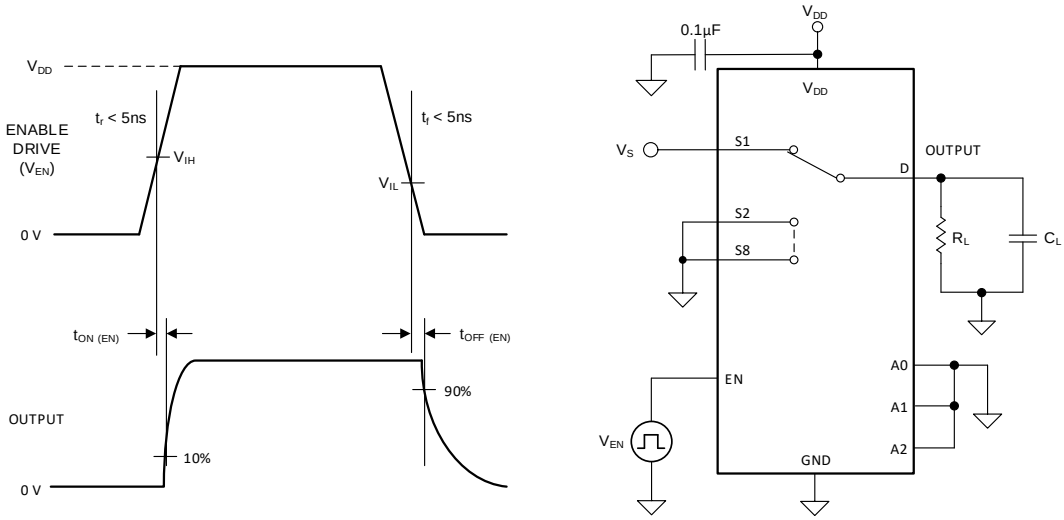

図 12. Turn-On and Turn-Off Time Measurement Setup

Overview (continued)

8.1.7 Charge Injection

The TMUX1208 and TMUX1209 have a transmission-gate topology. Any mismatch in capacitance between the NMOS and PMOS transistors results in a charge injected into the drain or source during the falling or rising edge of the gate signal. The amount of charge injected into the source or drain of the device is known as charge injection, and is denoted by the symbol Q_C. 図 13 shows the setup used to measure charge injection from source (Sx) to drain (D).

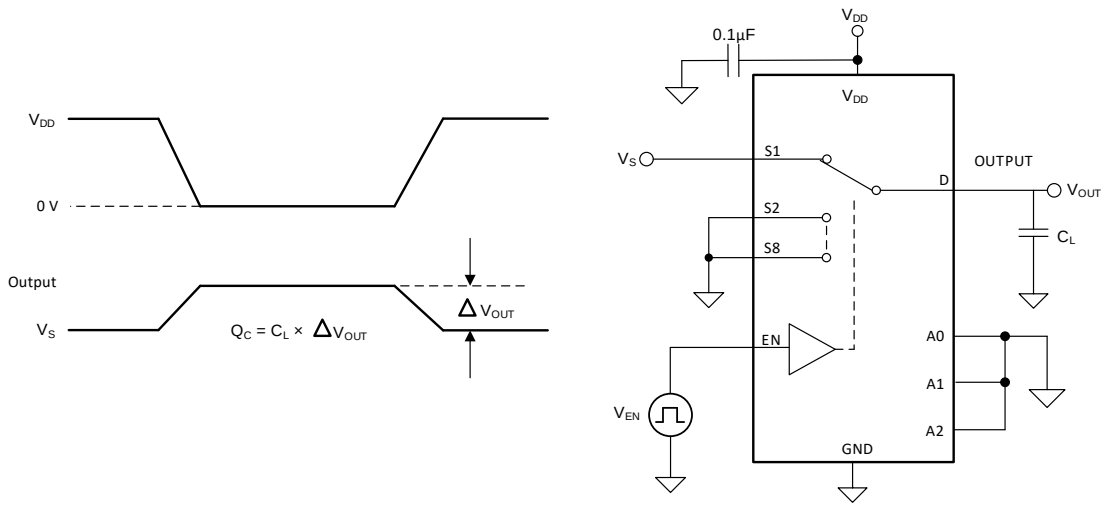

図 13. Charge-Injection Measurement Setup

8.1.8 Off Isolation

Off isolation is defined as the ratio of the signal at the drain pin (D) of the device when a signal is applied to the source pin (Sx) of an off-channel. 図 14 shows the setup used to measure, and the equation to compute off isolation.

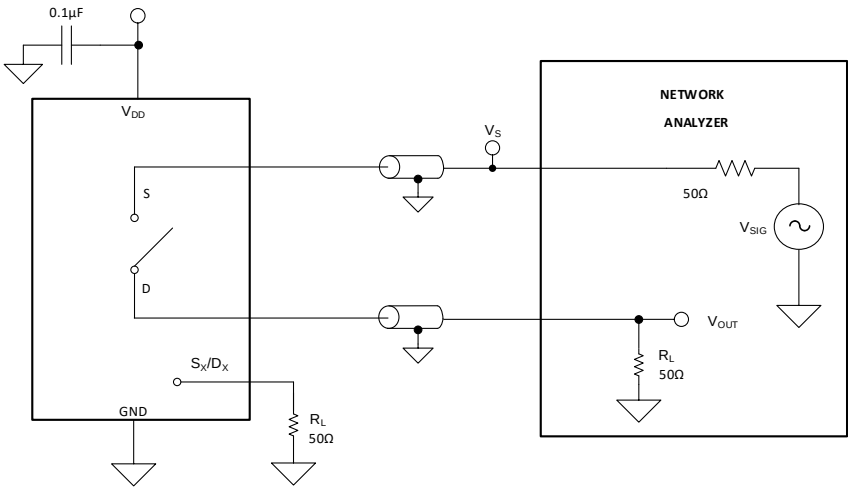

図 14. Off Isolation Measurement Setup

$$\text{Off Isolation} = 20 \cdot \text{Log}\left(\frac{V_{OUT}}{V_S}\right) \tag{1}$$

Copyright © 2018, Texas Instruments Incorporated

Overview (continued)

8.1.9 Crosstalk

Crosstalk is defined as the ratio of the signal at the drain pin (D) of a different channel, when a signal is applied at the source pin (Sx) of an on-channel. 図 15 shows the setup used to measure, and the equation used to compute crosstalk.

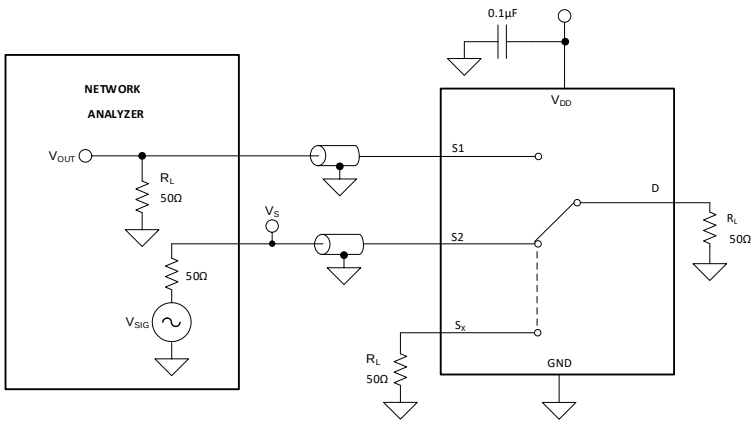

図 15. Channel-to-Channel Crosstalk Measurement Setup

$$\text{Channel-to-Channel Crosstalk} = 20 \cdot \text{Log}\left(\frac{V_{OUT}}{V_S}\right) \tag{2}$$

8.1.10 Bandwidth

Bandwidth is defined as the range of frequencies that are attenuated by less than 3 dB when the input is applied to the source pin (Sx) of an on-channel, and the output is measured at the drain pin (D) of the device. 図 16 shows the setup used to measure bandwidth.

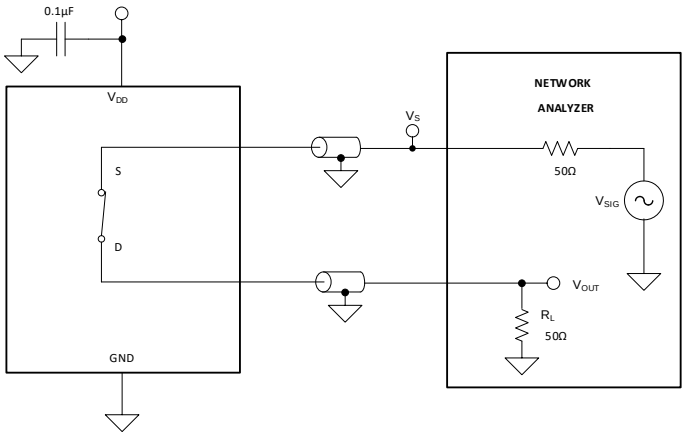

図 16. Bandwidth Measurement Setup

$$\text{Attenuation} = 20 \cdot \text{Log}\left(\frac{V_2}{V_1}\right) \tag{3}$$

8.2 Functional Block Diagram

The TMUX1208 is an 8:1, single-ended (1-ch.), mux. The TMUX1209 is an 4:1, differential (2-ch.), mux. Each channel is turned on or turned off based on the state of the address lines and enable pin.

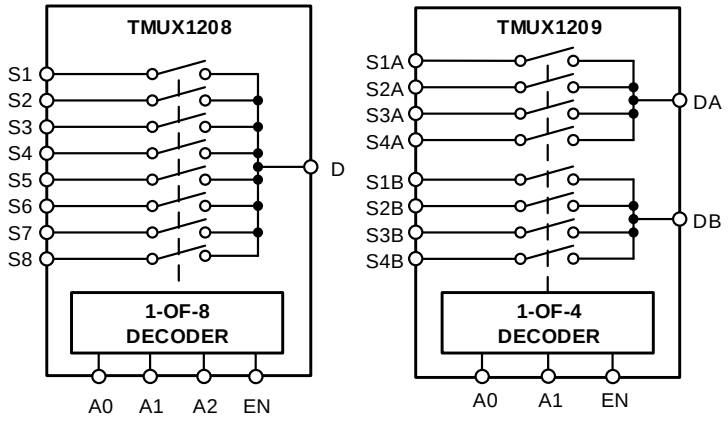

図 17. TMUX1208, TMUX1209 Functional Block Diagrams

8.3 Feature Description

8.3.1 Bidirectional Operation

The TMUX1208 and TMUX1209 conduct equally well from source (Sx) to drain (D) or from drain (D) to source (Sx). Each channel has very similar characteristics in both directions and supports both analog and digital signals.

8.3.2 Rail to Rail Operation

The valid signal path input/output voltage for TMUX1208 and TMUX1209 ranges from GND to V_{DD}.

8.3.3 1.8 V Logic Compatible Inputs

The TMUX1208 and TMUX1209 has 1.8-V logic compatible control for all logic control inputs. The logic input thresholds scale with supply but still provide 1.8-V logic control when operating at 5.5 V supply voltage. 1.8-V logic level inputs allows the multiplexers to interface with processors that have lower logic I/O rails and eliminates the need for an external translator, which saves both space and BOM cost. For more information on 1.8 V logic implementations refer to *Simplifying Design with 1.8 V logic Muxes and Switches*

8.3.4 Fail-Safe Logic

The TMUX1208 and TMUX1209 have Fail-Safe Logic on the control input pins (EN, A0. A1, A2) allowing for operation up to 5.5 V, regardless of the state of the supply pin. This feature allows voltages on the control pins to be applied before the supply pin, protecting the device from potential damage. Fail-Safe Logic minimizes system complexity by removing the need for power supply sequencing on the logic control pins. For example, the Fail-Safe Logic feature allows the select pins of the TMUX1208 or TMUX1209 to be ramped to 5.5 V while V_{DD} = 0 V. Additionally, the feature enables operation of the multiplexers with V_{DD} = 1.2 V while allowing the select pins to interface with a logic level of another device up to 5.5 V.

Copyright © 2018, Texas Instruments Incorporated

Feature Description (continued)

8.3.5 Device Functional Modes

When the EN pin of the TMUX1208 is pulled high, one of the switches is closed based on the state of the address lines. Similarly, when the EN pin of the TMUX1209 is pulled high, two of the switches are closed based on the state of the address lines. When the EN pin is pulled low, all the switches are in an open state regardless of the state of the address lines.

8.3.6 Truth Tables

表 1 and 表 2 show the truth tables for the TMUX1208 and TMUX1209, respectively.

表 1. TMUX1208 Truth Table

EN	A2	A1	A0	Selected Inputs Connected To Drain (D) Pin
0	X(1)	X(1)	X(1)	All channels are off
1	0	0	0	S1
1	0	0	1	S2
1	0	1	0	S3
1	0	1	1	S4
1	1	0	0	S5
1	1	0	1	S6
1	1	1	0	S7
1	1	1	1	S8

(1) X denotes *don't care*.

表 2. TMUX1209 Truth Table

EN	A1	A0	Selected Input Connected To Drain (DA, DB) Pins
0	X(1)	X(1)	All channels are off
1	0	0	S1A and S1B
1	0	1	S2A and S2B
1	1	0	S3A and S3B
1	1	1	S4A and S4B

(1) X denotes *don't care*.

Copyright © 2018, Texas Instruments Incorporated

9 Application and Implementation

注

Information in the following applications sections is not part of the TI component specification, and TI does not warrant its accuracy or completeness. TI's customers are responsible for determining suitability of components for their purposes. Customers should validate and test their design implementation to confirm system functionality.

9.1 Application Information

The TMUX12xx family offers good system performance across a wide operating supply (1.08V to 5.5V). These devices include 1.8V logic compatible control input pins that enable operation in systems with 1.8V I/O rails. Additionally, the control input pins support Fail-Safe Logic which allows for operation up to 5.5V, regardless of the state of the supply pin. This protection stops the logic pins from back-powering the supply rail. These features make the TMUX12xx a family of general purpose multiplexers and switches that can reduce system complexity, board size, and overall system cost.

9.2 Typical Application

One useful application to take advantage of the TMUX1208 features is multiplexing various signals into an ADC that is integrated into a MCU. Utilizing an integrated ADC in a MCU allows a system to minimize cost with a potential tradeoff of system performance when compared to an external ADC. The multiplexer allows for multiple inputs/sensors to be monitored with a single ADC pin of the device, which is critical in systems with limited I/O. The TMUX1209 is suitable for similar design example using differential signals, or as two 4:1 multiplexers.

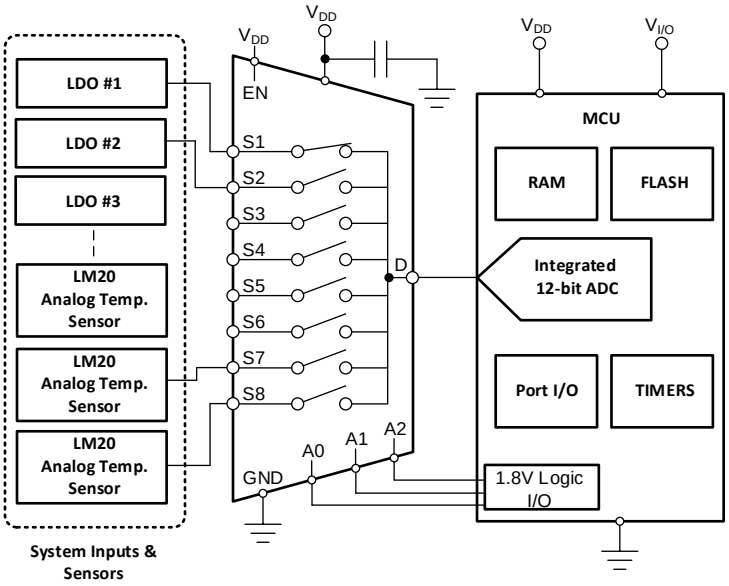

図 18. Multiplexing Signals to Integrated ADC

9.3 Design Requirements

For this design example, use the parameters listed in 表 3.

表 3. Design Parameters

PARAMETERS	VALUES
Supply (V_{DD})	5.0 V
I/O signal range	0 V to V_{DD} (Rail to Rail)
Control logic thresholds	1.8 V compatible

Copyright © 2018, Texas Instruments Incorporated

9.4 Detailed Design Procedure

The TMUX1208 and TMUX1209 can be operated without any external components except for the supply decoupling capacitors. If the parts desired power-up state is disabled, the enable pin should have a weak pull-down resistor and be controlled by the MCU via GPIO. All inputs being muxed to the ADC of the MCU must fall within the recommend operating conditions of the TMUX1208 and TMUX1209 including signal range and continuous current. For this design with a supply of 5 V the signal range can be 0 V to 5 V and the max continuous current can be 30 mA.

9.5 Application Curve

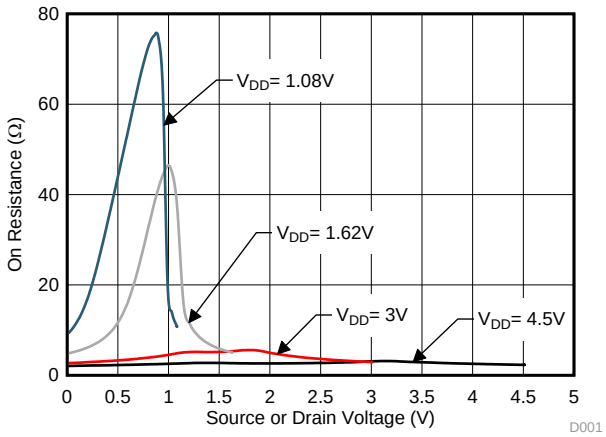

T_A = 25°C

図 19. On-Resistance vs Source or Drain Voltage

10 Power Supply Recommendations

The TMUX1208 and TMUX1209 operate across a wide supply range of 1.08 V to 5.5 V. Do not exceed the absolute maximum ratings because stresses beyond the listed ratings can cause permanent damage to the devices.

Power-supply bypassing improves noise margin and prevents switching noise propagation from the V_{DD} supply to other components. Good power-supply decoupling is important to achieve optimum performance. For improved supply noise immunity, use a supply decoupling capacitor ranging from 0.1 μF to 10 μF from V_{DD} to ground. Place the bypass capacitors as close to the power supply pins of the device as possible using low-impedance connections. TI recommends using multi-layer ceramic chip capacitors (MLCCs) that offer low equivalent series resistance (ESR) and inductance (ESL) characteristics for power-supply decoupling purposes. For very sensitive systems, or for systems in harsh noise environments, avoiding the use of vias for connecting the capacitors to the device pins may offer superior noise immunity. The use of multiple vias in parallel lowers the overall inductance and is beneficial for connections to ground planes.

Copyright © 2018, Texas Instruments Incorporated

11 Layout

11.1 Layout Guidelines

11.1.1 Layout Information

When a PCB trace turns a corner at a 90° angle, a reflection can occur. A reflection occurs primarily because of the change of width of the trace. At the apex of the turn, the trace width increases to 1.414 times the width. This increase upsets the transmission-line characteristics, especially the distributed capacitance and self–inductance of the trace which results in the reflection. Not all PCB traces can be straight and therefore some traces must turn corners. 図 20 shows progressively better techniques of rounding corners. Only the last example (BEST) maintains constant trace width and minimizes reflections.

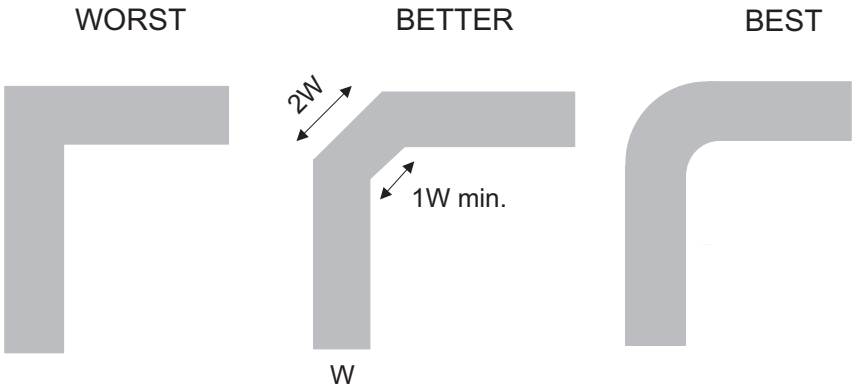

図 20. Trace Example

Route high-speed signals using a minimum of vias and corners which reduces signal reflections and impedance changes. When a via must be used, increase the clearance size around it to minimize its capacitance. Each via introduces discontinuities in the signal's transmission line and increases the chance of picking up interference from the other layers of the board. Be careful when designing test points, through-hole pins are not recommended at high frequencies.

図 21 illustrates an example of a PCB layout with the TMUX1208. Some key considerations are:

- Decouple the V_{DD} pin with a 0.1-µF capacitor, placed as close to the pin as possible. Make sure that the capacitor voltage rating is sufficient for the V_{DD} supply.
- Keep the input lines as short as possible.
- Use a solid ground plane to help reduce electromagnetic interference (EMI) noise pickup.
- Do not run sensitive analog traces in parallel with digital traces. Avoid crossing digital and analog traces if possible, and only make perpendicular crossings when necessary.

11.2 Layout Example

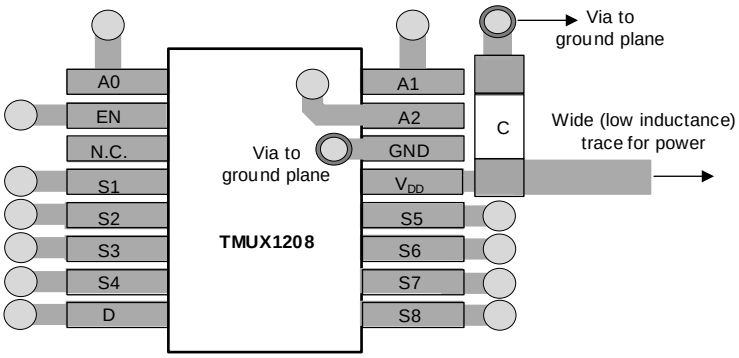

図 21. TMUX1208 Layout Example

Copyright © 2018, Texas Instruments Incorporated

12 デバイスおよびドキュメントのサポート

12.1 ドキュメントのサポート

12.1.1 関連資料

テキサス・インスツルメンツ、*『1.8Vロジックのマルチプレクサおよびスイッチにおける設計の単純化』*

テキサス・インスツルメンツ、*『QFN/SONのPCB実装』*

テキサス・インスツルメンツ、*『クワッド・フラットパック・リード端子なしロジック・パッケージ』*

12.2 関連リンク

次の表に、クイック・アクセス・リンクを示します。カテゴリには、技術資料、サポートおよびコミュニティ・リソース、ツールとソフトウェア、およびご注文へのクイック・アクセスが含まれます。

表 4. 関連リンク

製品	プロダクト・フォルダ	ご注文はこちら	技術資料	ツールとソフトウェア	サポートとコミュニティ
TMUX1208	ここをクリック	ここをクリック	ここをクリック	ここをクリック	ここをクリック
TMUX1209	ここをクリック	ここをクリック	ここをクリック	ここをクリック	ここをクリック

12.3 ドキュメントの更新通知を受け取る方法

ドキュメントの更新についての通知を受け取るには、ti.comのデバイス製品フォルダを開いてください。右上の「アラートを受け取る」をクリックして登録すると、変更されたすべての製品情報に関するダイジェストを毎週受け取れます。変更の詳細については、修正されたドキュメントに含まれている改訂履歴をご覧ください。

12.4 コミュニティ・リソース

The following links connect to TI community resources. Linked contents are provided "AS IS" by the respective contributors. They do not constitute TI specifications and do not necessarily reflect TI's views; see TI's Terms of Use.

TI E2E™オンライン・コミュニティ ***TIのE2E（Engineer-to-Engineer）コミュニティ。***エンジニア間の共同作業を促進するために開設されたものです。e2e.ti.comでは、他のエンジニアに質問し、知識を共有し、アイディアを検討して、問題解決に役立てることができます。

設計サポート ***TIの設計サポート*** 役に立つE2Eフォーラムや、設計サポート・ツールをすばやく見つけることができます。技術サポート用の連絡先情報も参照できます。

12.5 商標

E2E is a trademark of Texas Instruments.

12.6 静電気放電に関する注意事項

すべての集積回路は、適切なESD保護方法を用いて、取扱いと保存を行うようにして下さい。

静電気放電はわずかな性能の低下から完全なデバイスの故障に至るまで、様々な損傷を与えます。高精度の集積回路は、損傷に対して敏感であり、極めてわずかなパラメータの変化により、デバイスに規定された仕様に適合しなくなる場合があります。

12.7 Glossary

SLYZ022 — *TI Glossary*.

This glossary lists and explains terms, acronyms, and definitions.

13 メカニカル、パッケージ、および注文情報

以降のページには、メカニカル、パッケージ、および注文に関する情報が記載されています。この情報は、そのデバイスについて利用可能な最新のデータです。このデータは予告なく変更されることがあり、ドキュメントが改訂される場合もあります。本データシートのブラウザ版を使用されている場合は、画面左側の説明をご覧ください。

PACKAGING INFORMATION

Orderable part number	Status (1)	Material type (2)	Package | Pins	Package qty | Carrier	RoHS (3)	Lead finish/ Ball material (4)	MSL rating/ Peak reflow (5)	Op temp (°C)	Part marking (6)
TMUX1208PWR	Active	Production	TSSOP (PW) | 16	2000 | LARGE T&R	Yes	NIPDAU | SN	Level-1-260C-UNLIM	-40 to 125	TM1208
TMUX1208PWR.A	Active	Production	TSSOP (PW) | 16	2000 | LARGE T&R	Yes	NIPDAU	Level-1-260C-UNLIM	-40 to 125	TM1208
TMUX1208PWRG4	Active	Production	TSSOP (PW) | 16	2000 | LARGE T&R	Yes	NIPDAU	Level-1-260C-UNLIM	-40 to 125	TM1208
TMUX1208PWRG4.A	Active	Production	TSSOP (PW) | 16	2000 | LARGE T&R	Yes	NIPDAU	Level-1-260C-UNLIM	-40 to 125	TM1208
TMUX1208RSVR	Active	Production	UQFN (RSV) | 16	3000 | LARGE T&R	Yes	NIPDAU	Level-1-260C-UNLIM	-40 to 125	1B4
TMUX1208RSVR.A	Active	Production	UQFN (RSV) | 16	3000 | LARGE T&R	Yes	NIPDAU	Level-1-260C-UNLIM	-40 to 125	1B4
TMUX1208RSVRG4.A	Active	Production	UQFN (RSV) | 16	3000 | LARGE T&R	Yes	NIPDAU	Level-1-260C-UNLIM	-40 to 125	1B4
TMUX1209PWR	Active	Production	TSSOP (PW) | 16	2000 | LARGE T&R	Yes	NIPDAU | SN	Level-1-260C-UNLIM	-40 to 125	TM1209
TMUX1209PWR.A	Active	Production	TSSOP (PW) | 16	2000 | LARGE T&R	Yes	NIPDAU	Level-1-260C-UNLIM	-40 to 125	TM1209
TMUX1209PWRG4	Active	Production	TSSOP (PW) | 16	2000 | LARGE T&R	Yes	NIPDAU	Level-1-260C-UNLIM	-40 to 125	TM1209
TMUX1209PWRG4.A	Active	Production	TSSOP (PW) | 16	2000 | LARGE T&R	Yes	NIPDAU	Level-1-260C-UNLIM	-40 to 125	TM1209
TMUX1209RSVR	Active	Production	UQFN (RSV) | 16	3000 | LARGE T&R	Yes	NIPDAU	Level-1-260C-UNLIM	-40 to 125	1D2
TMUX1209RSVR.A	Active	Production	UQFN (RSV) | 16	3000 | LARGE T&R	Yes	NIPDAU	Level-1-260C-UNLIM	-40 to 125	1D2
TMUX1209RSVRG4.A	Active	Production	UQFN (RSV) | 16	3000 | LARGE T&R	Yes	NIPDAU	Level-1-260C-UNLIM	-40 to 125	1D2

(1) **Status:** For more details on status, see our product life cycle.

(2) **Material type:** When designated, preproduction parts are prototypes/experimental devices, and are not yet approved or released for full production. Testing and final process, including without limitation quality assurance, reliability performance testing, and/or process qualification, may not yet be complete, and this item is subject to further changes or possible discontinuation. If available for ordering, purchases will be subject to an additional waiver at checkout, and are intended for early internal evaluation purposes only. These items are sold without warranties of any kind.

(3) **RoHS values:** Yes, No, RoHS Exempt. See the TI RoHS Statement for additional information and value definition.

(4) **Lead finish/Ball material:** Parts may have multiple material finish options. Finish options are separated by a vertical ruled line. Lead finish/Ball material values may wrap to two lines if the finish value exceeds the maximum column width.

(5) **MSL rating/Peak reflow:** The moisture sensitivity level ratings and peak solder (reflow) temperatures. In the event that a part has multiple moisture sensitivity ratings, only the lowest level per JEDEC standards is shown. Refer to the shipping label for the actual reflow temperature that will be used to mount the part to the printed circuit board.

(6) **Part marking:** There may be an additional marking, which relates to the logo, the lot trace code information, or the environmental category of the part.

Multiple part markings will be inside parentheses. Only one part marking contained in parentheses and separated by a "~" will appear on a part. If a line is indented then it is a continuation of the previous line and the two combined represent the entire part marking for that device.

Important Information and Disclaimer: The information provided on this page represents TI's knowledge and belief as of the date that it is provided. TI bases its knowledge and belief on information provided by third parties, and makes no representation or warranty as to the accuracy of such information. Efforts are underway to better integrate information from third parties. TI has taken and continues to take reasonable steps to provide representative and accurate information but may not have conducted destructive testing or chemical analysis on incoming materials and chemicals. TI and TI suppliers consider certain information to be proprietary, and thus CAS numbers and other limited information may not be available for release.

In no event shall TI's liability arising out of such information exceed the total purchase price of the TI part(s) at issue in this document sold by TI to Customer on an annual basis.

OTHER QUALIFIED VERSIONS OF TMUX1208 :

- Automotive : TMUX1208-Q1

NOTE: Qualified Version Definitions:

- Automotive - Q100 devices qualified for high-reliability automotive applications targeting zero defects

TAPE AND REEL INFORMATION

REEL DIMENSIONS

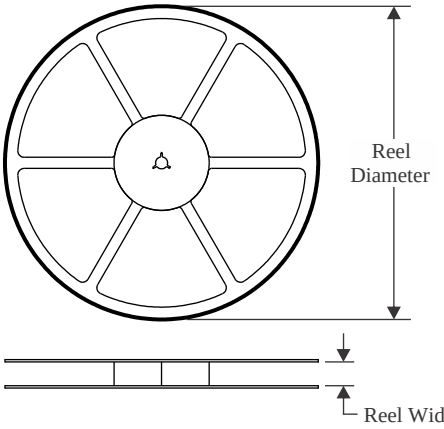

TAPE DIMENSIONS

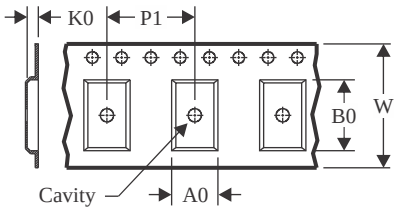

A0	Dimension designed to accommodate the component width
B0	Dimension designed to accommodate the component length
K0	Dimension designed to accommodate the component thickness
W	Overall width of the carrier tape
P1	Pitch between successive cavity centers

QUADRANT ASSIGNMENTS FOR PIN 1 ORIENTATION IN TAPE

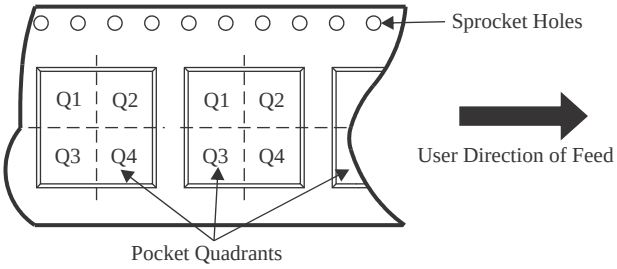

*All dimensions are nominal

Device	Package Type	Package Drawing	Pins	SPQ	Reel Diameter (mm)	Reel Width W1 (mm)	A0 (mm)	B0 (mm)	K0 (mm)	P1 (mm)	W (mm)	Pin1 Quadrant
TMUX1208PWR	TSSOP	PW	16	2000	330.0	12.4	6.9	5.6	1.6	8.0	12.0	Q1
TMUX1208PWR	TSSOP	PW	16	2000	330.0	12.4	6.9	5.6	1.6	8.0	12.0	Q1
TMUX1208PWRG4	TSSOP	PW	16	2000	330.0	12.4	6.9	5.6	1.6	8.0	12.0	Q1
TMUX1208RSVR	UQFN	RSV	16	3000	178.0	13.5	2.1	2.9	0.75	4.0	12.0	Q1
TMUX1209PWR	TSSOP	PW	16	2000	330.0	12.4	6.9	5.6	1.6	8.0	12.0	Q1
TMUX1209PWR	TSSOP	PW	16	2000	330.0	12.4	6.9	5.6	1.6	8.0	12.0	Q1
TMUX1209PWRG4	TSSOP	PW	16	2000	330.0	12.4	6.9	5.6	1.6	8.0	12.0	Q1
TMUX1209RSVR	UQFN	RSV	16	3000	178.0	13.5	2.1	2.9	0.75	4.0	12.0	Q1

TAPE AND REEL BOX DIMENSIONS

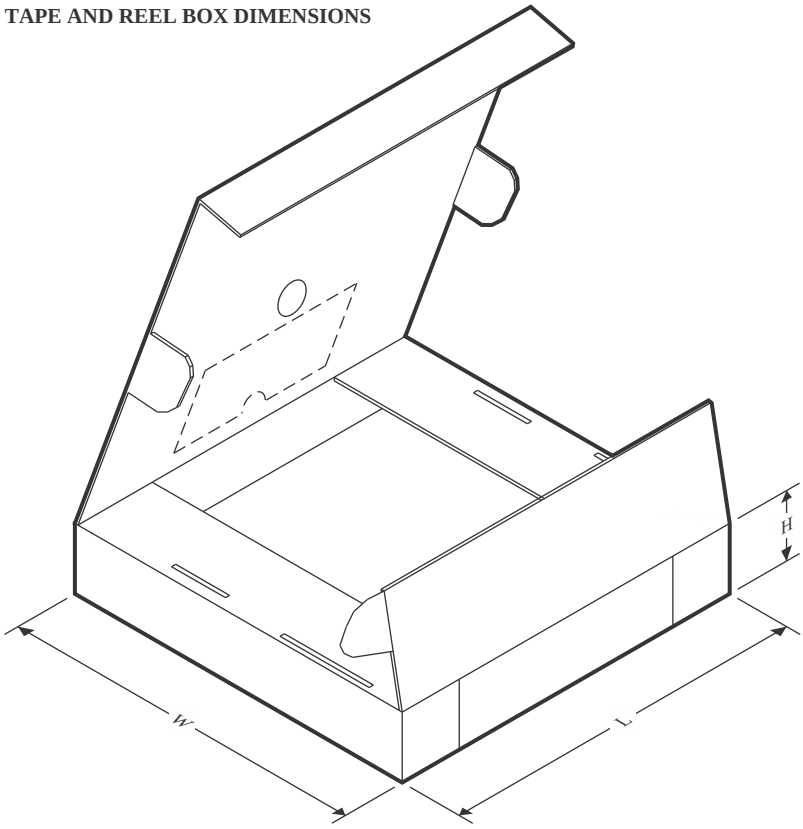

*All dimensions are nominal

Device	Package Type	Package Drawing	Pins	SPQ	Length (mm)	Width (mm)	Height (mm)
TMUX1208PWR	TSSOP	PW	16	2000	356.0	356.0	35.0
TMUX1208PWR	TSSOP	PW	16	2000	353.0	353.0	32.0
TMUX1208PWRG4	TSSOP	PW	16	2000	353.0	353.0	32.0
TMUX1208RSVR	UQFN	RSV	16	3000	189.0	185.0	36.0
TMUX1209PWR	TSSOP	PW	16	2000	356.0	356.0	35.0
TMUX1209PWR	TSSOP	PW	16	2000	353.0	353.0	32.0
TMUX1209PWRG4	TSSOP	PW	16	2000	353.0	353.0	32.0
TMUX1209RSVR	UQFN	RSV	16	3000	189.0	185.0	36.0

GENERIC PACKAGE VIEW

RSV 16

UQFN - 0.55 mm max height

1.8 x 2.6, 0.4 mm pitch

ULTRA THIN QUAD FLATPACK - NO LEAD

This image is a representation of the package family, actual package may vary.
Refer to the product data sheet for package details.

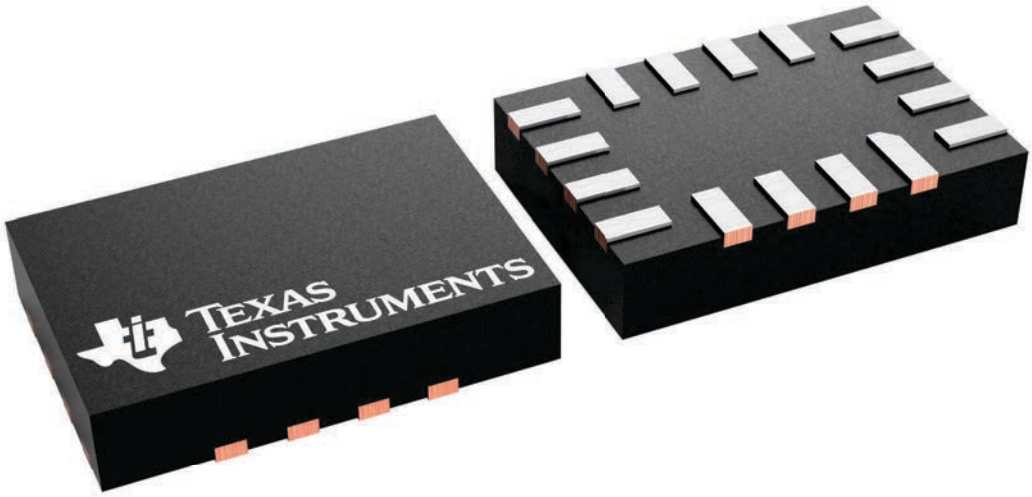

4231225/A

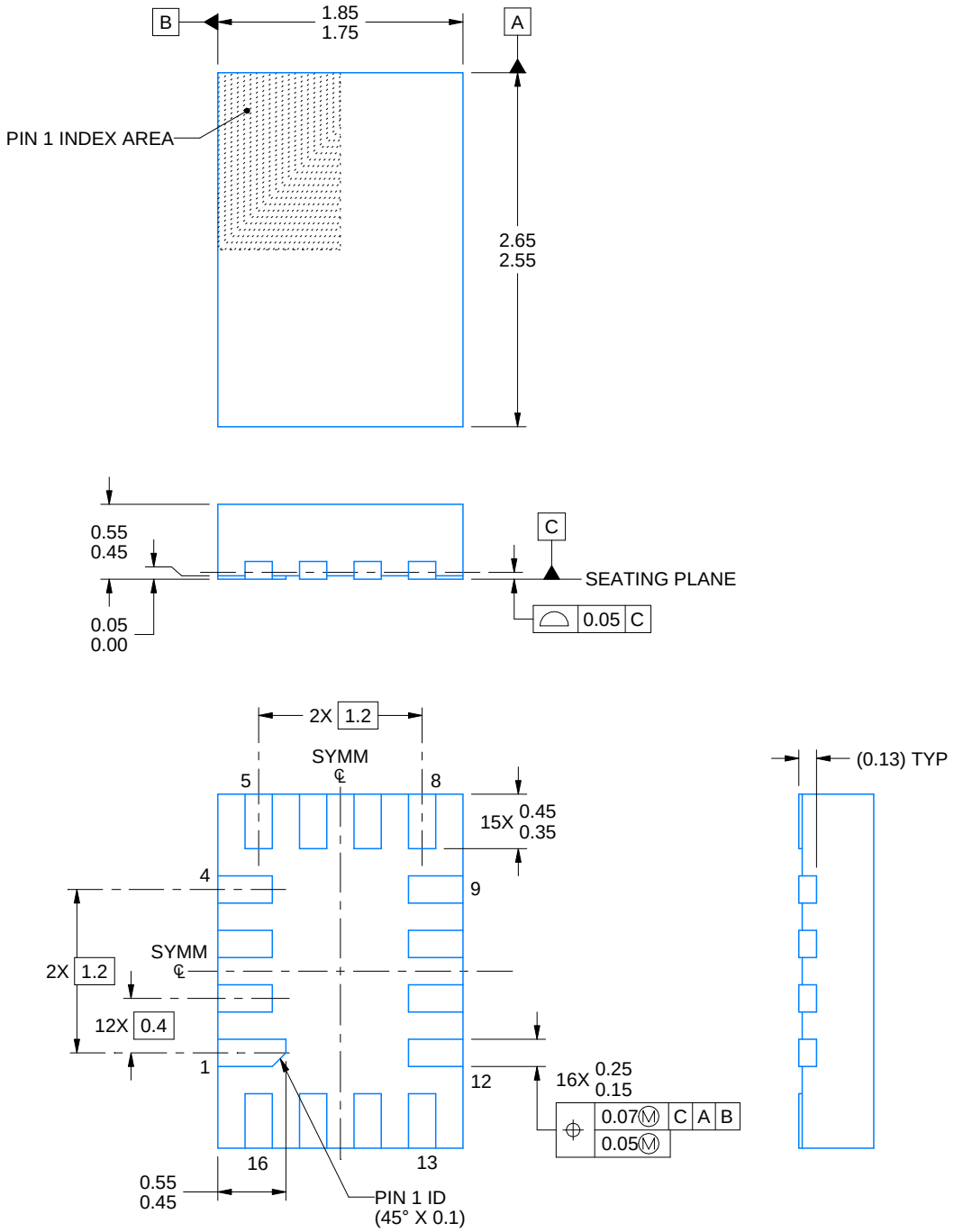

NOTES:

1. All linear dimensions are in millimeters. Any dimensions in parenthesis are for reference only. Dimensioning and tolerancing per ASME Y14.5M.
2. This drawing is subject to change without notice.

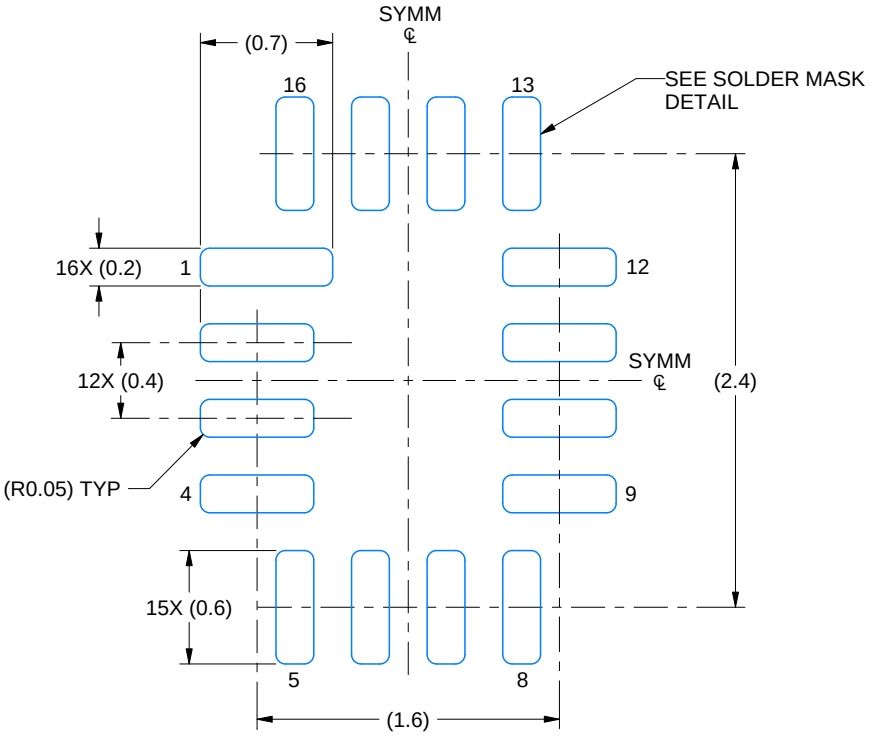

LAND PATTERN EXAMPLE
EXPOSED METAL SHOWN
SCALE: 25X

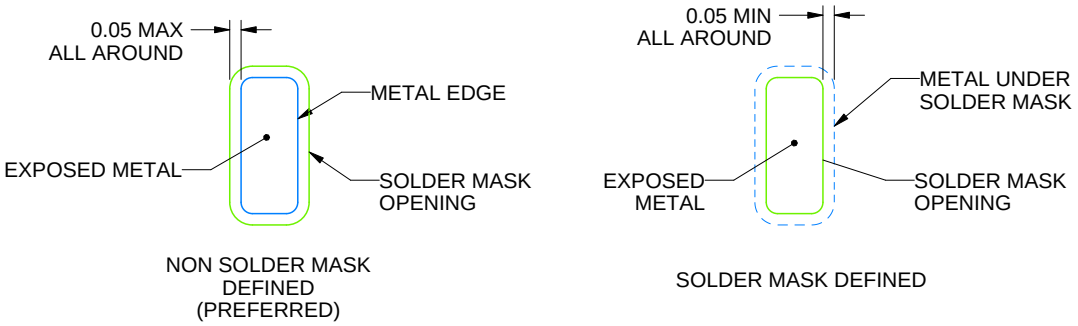

SOLDER MASK DETAILS

4220314/C 02/2020

NOTES: (continued)

3. For more information, see Texas Instruments literature number SLUA271 (www.ti.com/lit/slua271).

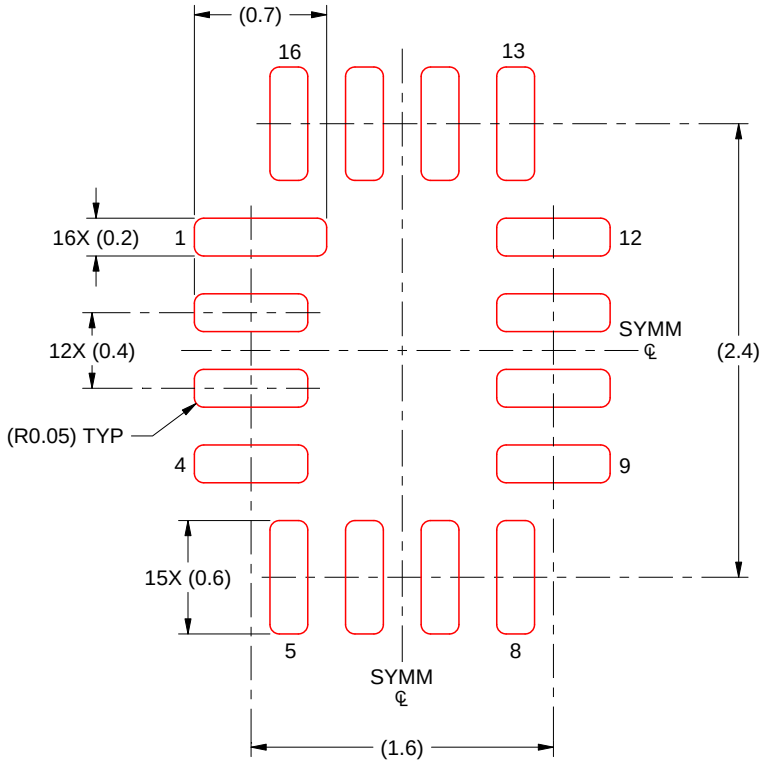

SOLDER PASTE EXAMPLE
BASED ON 0.125 MM THICK STENCIL
SCALE: 25X

4220314/C 02/2020

NOTES: (continued)

4. Laser cutting apertures with trapezoidal walls and rounded corners may offer better paste release. IPC-7525 may have alternate design recommendations.

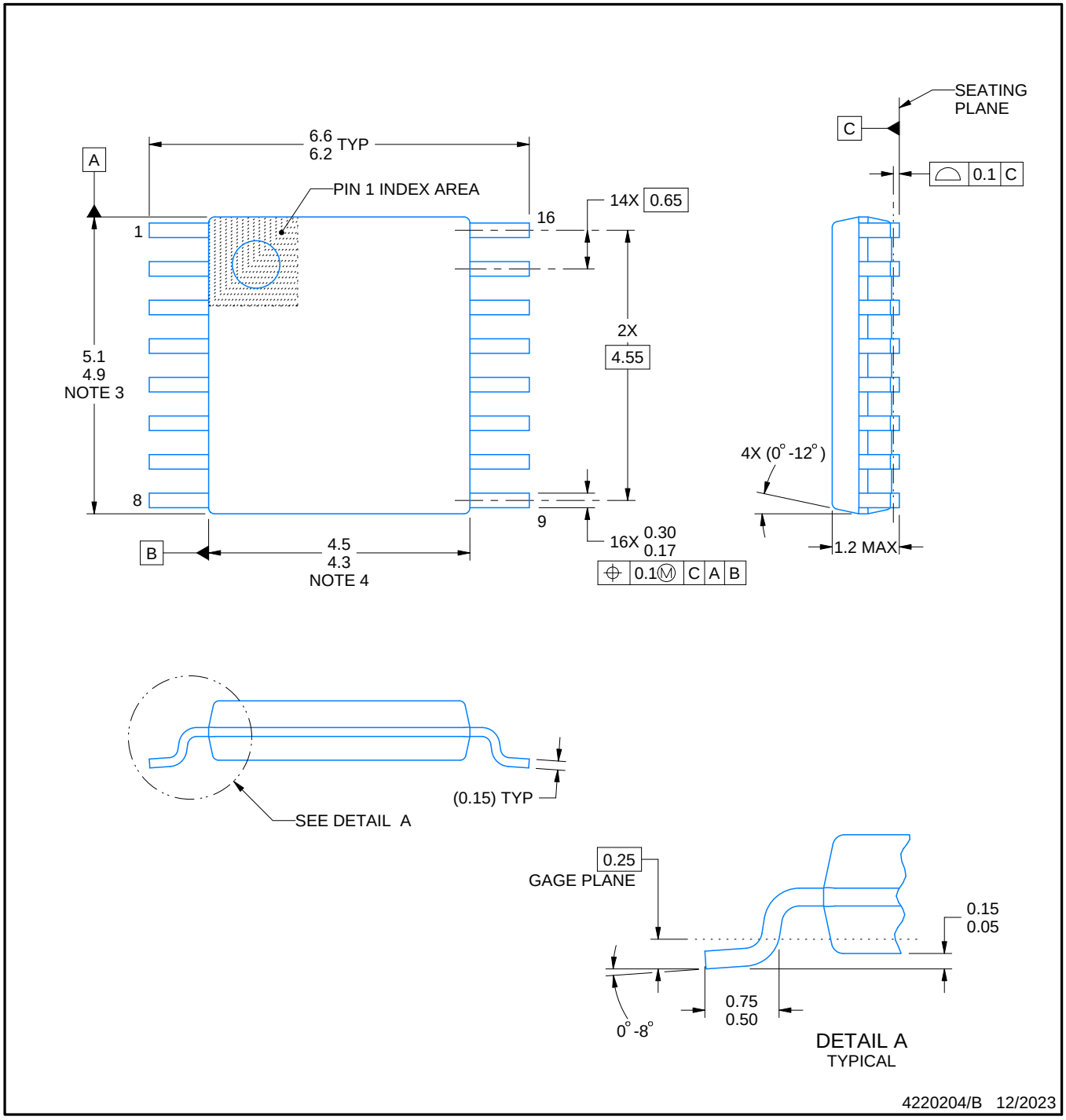

NOTES:

1. All linear dimensions are in millimeters. Any dimensions in parenthesis are for reference only. Dimensioning and tolerancing per ASME Y14.5M.
2. This drawing is subject to change without notice.
3. This dimension does not include mold flash, protrusions, or gate burrs. Mold flash, protrusions, or gate burrs shall not exceed 0.15 mm per side.
4. This dimension does not include interlead flash. Interlead flash shall not exceed 0.25 mm per side.
5. Reference JEDEC registration MO-153.

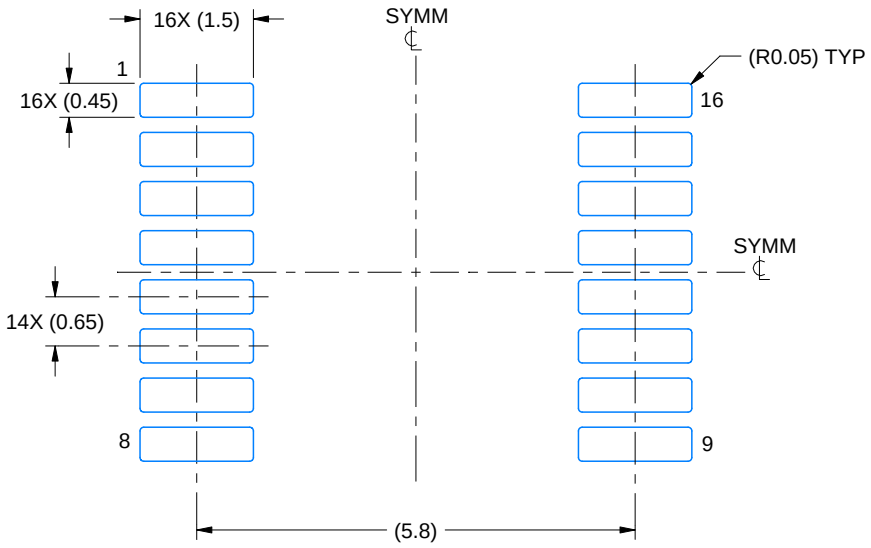

LAND PATTERN EXAMPLE
EXPOSED METAL SHOWN
SCALE: 10X

NON-SOLDER MASK DEFINED (PREFERRED)

SOLDER MASK DEFINED

SOLDER MASK DETAILS

4220204/B 12/2023

NOTES: (continued)

6. Publication IPC-7351 may have alternate designs.
7. Solder mask tolerances between and around signal pads can vary based on board fabrication site.

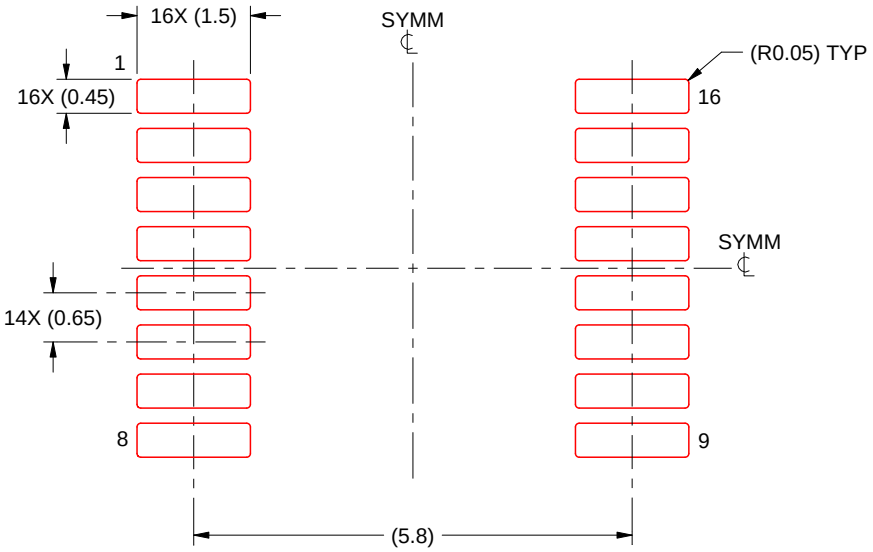

SOLDER PASTE EXAMPLE
BASED ON 0.125 mm THICK STENCIL
SCALE: 10X

4220204/B 12/2023

NOTES: (continued)

8. Laser cutting apertures with trapezoidal walls and rounded corners may offer better paste release. IPC-7525 may have alternate design recommendations.
9. Board assembly site may have different recommendations for stencil design.

重要なお知らせと免責事項

TI は、技術データと信頼性データ (データシートを含みます)、設計リソース (リファレンス デザインを含みます)、アプリケーションや設計に関する各種アドバイス、Web ツール、安全性情報、その他のリソースを、欠陥が存在する可能性のある「現状のまま」提供しており、商品性および特定目的に対する適合性の黙示保証、第三者の知的財産権の非侵害保証を含むいかなる保証も、明示的または黙示的にかかわらず拒否します。

これらのリソースは、TI 製品を使用する設計の経験を積んだ開発者への提供を意図したものです。(1) お客様のアプリケーションに適した TI 製品の選定、(2) お客様のアプリケーションの設計、検証、試験、(3) お客様のアプリケーションに該当する各種規格や、その他のあらゆる安全性、セキュリティ、規制、または他の要件への確実な適合に関する責任を、お客様のみが単独で負うものとします。

上記の各種リソースは、予告なく変更される可能性があります。これらのリソースは、リソースで説明されている TI 製品を使用するアプリケーションの開発の目的でのみ、TI はその使用をお客様に許諾します。これらのリソースに関して、他の目的で複製することや掲載することは禁止されています。TI や第三者の知的財産権のライセンスが付与されている訳ではありません。お客様は、これらのリソースを自身で使用した結果発生するあらゆる申し立て、損害、費用、損失、責任について、TI およびその代理人を完全に補償するものとし、TI は一切の責任を拒否します。

TI の製品は、 TI の販売条件 、 TI の総合的な品質ガイドライン 、 ti.com または TI 製品などに関連して提供される他の適用条件に従い提供されます。TI がこれらのリソースを提供することは、適用される TI の保証または他の保証の放棄の拡大や変更を意味するものではありません。 TI がカスタム、またはカスタマー仕様として明示的に指定していない限り、TI の製品は標準的なカタログに掲載される汎用機器です。

お客様がいかなる追加条項または代替条項を提案する場合も、TI はそれらに異議を唱え、拒否します。

Copyright © 2026, Texas Instruments Incorporated

最終更新日：2025 年 10 月