TMUX821x 100V、平坦な Ron、1:1 (SPST)、ラッチアップ耐性、1.8V ロジック対応、4 チャネル・スイッチ

1 特長

- 広い電源電圧範囲:
  - デュアル電源:±10V～±50V
  - 単一電源:10V～100V
  - 非対称のデュアル電源動作
- 電源電圧範囲全体にわたって安定したパラメータ特性
- ラッチアップ・フリー
- 大きい連続電流:200mA
- 低いクロストーク:–110dB
- 低い入力リーク:10pA
- 低いオン抵抗平坦性:0.05Ω
- 低オン抵抗:5Ω
- 低い静電容量:12pF
- 追加のロジック・レール (V_L) が不要
- 1.8V ロジックに対応
- フェイルセーフ・ロジック:電源から独立して最大 48V
- ロジック・ピンにプルダウン抵抗を内蔵
- 双方向の信号パス
- 広い動作温度範囲 T_A:–40℃～125℃
- 業界標準の TSSOP と
  小型の WQFN パッケージ

2 アプリケーション

- 高電圧双方向スイッチング
- アナログおよびデジタル信号スイッチング
- 半導体試験用機器
- LCD 試験装置
- バッテリ試験装置
- データ・アクイジション・システム (DAQ)
- デジタル・マルチメータ (DMM)
- ファクトリ・オートメーション / 制御
- プログラマブル・ロジック・コントローラ (PLC)
- アナログ入力モジュール

3 概要

TMUX8211、TMUX8212、TMUX8213 は、ラッチアップ・フリーの最新の高電圧対応アナログ・スイッチです。各デバイスは、独立して制御できる 4 つの 1:1 単極単投 (SPST) スイッチ・チャネルを備えています。これらのデバイスは、デュアル電源、単一電源、または最大 100V の非対称電源で正常に動作します。TMUX821x デバイスは、電源電圧範囲全体にわたって安定したアナログ・パラメータ特性を示します。TMUX821x ファミリは、ソース (Sx) ピンとドレイン (Dx) ピンでの双方向アナログおよびデジタル信号をサポートしています。

すべてのロジック入力は 1.8V、3.3V、5V のロジック・レベルに対応しており、最高 48V の電圧に接続可能であるため、制御信号電圧について柔軟なシステムを実現します。フェイルセーフ・ロジック回路によって、電源ピンよりも先にロジック・ピンに電圧が印加されるため、デバイスへの損傷の可能性が避けられます。

このデバイス・ファミリは、ラッチアップ・フリーであるため、デバイス内の寄生構造間の好ましくない大電流イベントを防止できます。ラッチアップ状態は通常、電源レールがオフにされるまで継続するため、デバイスの故障の原因となる場合があります。ラッチアップ・フリーという特長により、このマルチプレクサ・ファミリは過酷な環境でも使用できます。

パッケージ情報 (1) (2)

部品番号	パッケージ	本体サイズ (公称)
TMUX8211 TMUX8212 TMUX8213	PW (TSSOP、16)	5.00mm × 4.40mm
	RUM (WQFN、16)	4.00mm x 4.00mm

(1) 利用可能なすべてのパッケージについては、このデータシートの末尾にある注文情報を参照してください。
(2) デバイス比較表を参照してください。

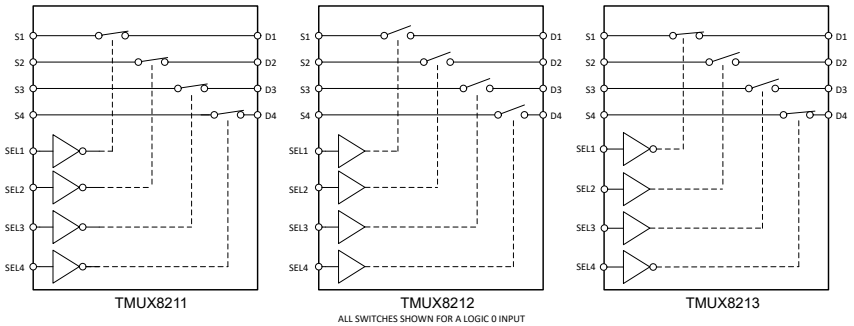

機能ブロック図

英語版の TI 製品についての情報を翻訳したこの資料は、製品の概要を確認する目的で便宜的に提供しているものです。該当する正式な英語版の最新情報は、www.ti.com で閲覧でき、その内容が常に優先されます。TI では翻訳の正確性および妥当性につきましては一切保証いたしません。実際の設計などの前には、必ず最新版の英語版をご参照くださいますようお願いいたします。

Table of Contents

1 特長 ... 1
2 アプリケーション ... 1
3 概要 ... 1
4 Revision History ... 2
5 Device Comparison Table ... 3
6 Pin Configuration and Functions ... 3
7 Specifications ... 4
7.1 Absolute Maximum Ratings: TMUX821x Devices ... 4
7.2 ESD Ratings ... 4
7.3 Recommended Operating Conditions: TMUX821x Devices ... 4
7.4 ソースまたはドレイン連続電流 ... 5
7.5 ドレイン・パルス電流のソース ... 5
7.6 Thermal Information ... 6
7.7 Electrical Characteristics (Global): TMUX821x Devices ... 6
7.8 Electrical Characteristics (±15-V Dual Supply) ... 7
7.9 Electrical Characteristics (±36-V Dual Supply) ... 8
7.10 Electrical Characteristics (±50-V Dual Supply) ... 9
7.11 Electrical Characteristics (72-V Single Supply) ... 10
7.12 Electrical Characteristics (100-V Single Supply) ... 11
7.13 Switching Characteristics: TMUX821x Devices ... 12
7.14 Typical Characteristics ... 13
8 Parameter Measurement Information ... 18
8.1 On-Resistance ... 18
8.2 Off-Leakage Current ... 18
8.3 On-Leakage Current ... 19
8.4 Device Turn-On and Turn-Off Time ... 19
8.5 Charge Injection ... 20
8.6 Off Isolation ... 20
8.7 Crosstalk ... 21
8.8 Bandwidth ... 21
8.9 THD + Noise ... 22
9 Detailed Description ... 23
9.1 Overview ... 23
9.2 Functional Block Diagram ... 23
9.3 Feature Description ... 23
9.4 Device Functional Modes ... 25
10 Application and Implementation ... 26
10.1 Application Information ... 26
10.2 Typical Application ... 26
11 Power Supply Recommendations ... 28
12 Layout ... 29
12.1 Layout Guidelines ... 29
12.2 Layout Example ... 29
13 Device and Documentation Support ... 30
13.1 Documentation Support ... 30
13.2 ドキュメントの更新通知を受け取る方法 ... 30
13.3 サポート・リソース ... 30
13.4 Trademarks ... 30
13.5 静電気放電に関する注意事項 ... 30
13.6 用語集 ... 30
14 Mechanical, Packaging, and Orderable Information ... 30

4 Revision History

資料番号末尾の英字は改訂を表しています。その改訂履歴は英語版に準じています。

Changes from Revision A (December 2021) to Revision B (March 2023)	Page
• RUM パッケージのステータスをプレビューからアクティブに変更	1

Changes from Revision * (October 2021) to Revision A (December 2021)	Page
• データシートのステータスを「事前情報」から*「量産データ」に変更*	1

Copyright © 2023 Texas Instruments Incorporated

5 Device Comparison Table

PRODUCT	DESCRIPTION
TMUX8211	High Voltage, 4-channel, 1:1 (SPST) switches, (Logic Low)
TMUX8212	High Voltage, 4-channel, 1:1 (SPST) switches, (Logic High)
TMUX8213	High Voltage, 4-channel, 1:1 (SPST) switches, (Logic Low + Logic High)

6 Pin Configuration and Functions

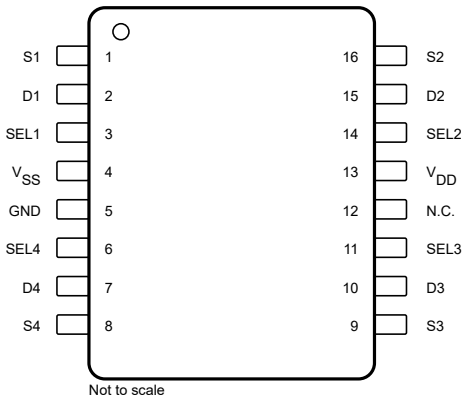

図 6-1. PW Package, 16-Pin TSSOP (Top View)

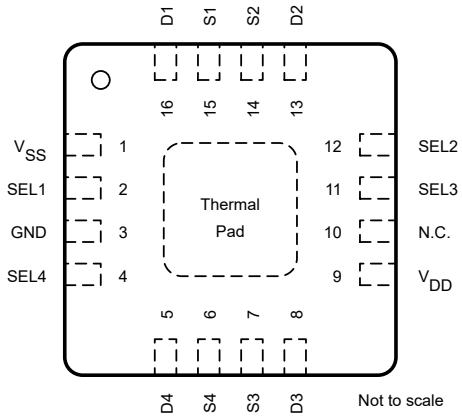

図 6-2. RUM Package, 16-Pin WQFN (Top View)

表 6-1. Pin Functions

PIN			TYPE(1)	DESCRIPTION
NAME	TSSOP	WQFN		
D1	2	16	I/O	Drain pin 1. Can be an input or output.
D2	15	13	I/O	Drain pin 2. Can be an input or output.
D3	10	8	I/O	Drain pin 3. Can be an input or output.
D4	7	5	I/O	Drain pin 4. Can be an input or output.
GND	5	3	P	Ground (0 V) reference
S1	1	15	I/O	Source pin 1. Can be an input or output.
S2	16	14	I/O	Source pin 2. Can be an input or output.
S3	9	7	I/O	Source pin 3. Can be an input or output.
S3	9	7	I/O	Source pin 3. Can be an input or output.
S4	8	6	I/O	Source pin 4. Can be an input or output.
SEL1	3	2	I	Logic control input 1.
SEL2	14	12	I	Logic control input 2.
SEL3	11	11	I	Logic control input 3.
SEL4	6	4	I	Logic control input 4.
N.C.	12	10	—	No internal connection.
V_{DD}	13	9	P	Positive power supply. This pin is the most positive power-supply potential. For reliable operation, connect a decoupling capacitor ranging from 1 µF to 10 µF between V_{DD} and GND.
V_{SS}	4	1	P	Negative power supply. This pin is the most negative power-supply potential. In single-supply applications, this pin can be connected to ground. For reliable operation, connect a decoupling capacitor ranging from 1 µF to 10 µF between V_{SS} and GND.
Thermal Pad			—	The thermal pad is not connected internally. It is recommended that the pad be tied to GND or V_{SS} for best performance.

(1) I = input, O = output, I/O = input and output, P = power

7 Specifications

7.1 Absolute Maximum Ratings: TMUX821x Devices

over operating free-air temperature range (unless otherwise noted)[1]

		MIN	MAX	UNIT
V_{DD}–V_{SS}	Supply voltage		110	V
V_{DD}		–0.5	110	V
V_{SS}		–110	0.5	V
V_{SELx}	Logic control input pin voltage (SELx)	–0.5	50	V
I_{SELx}	Logic control input pin current (SELx)	–30	30	mA
V_S or V_D	Source or drain voltage (Sx, Dx)	V_{SS}–2	V_{DD}+2	V
I_{DC}	Source or drain continuous current (Sx, Dx)	–200	200	mA
I_{IK} [2]	Diode clamp current at 85°C	–100	100	mA
	Diode clamp current at 125°C	–15	15	mA
T_{stg}	Storage temperature	–65	150	°C
T_A	Ambient temperature	–55	150	°C
T_J	Junction temperature		150	°C
P_{tot} [3]	Total power dissipation (QFN)		1680	mW
P_{tot} [4]	Total power dissipation (TSSOP)		720	mW

(1) Operation outside the *Absolute Maximum Ratings* may cause permanent device damage. Absolute maximum ratings do not imply functional operation of the device at these or any other conditions beyond those listed under *Recommended Operating Conditions*. If briefly operating outside the *Recommended Operating Conditions* but within the *Absolute Maximum Ratings*, the device may not sustain damage, but it may not be fully functional. Operating the device in this manner may affect device reliability, functionality, performance, and shorten the device lifetime.
(2) Signal path pins are diode-clamped to the power-supply rails. Over voltage signals must be voltage and current limited to maximum ratings.
(3) For QFN package: P_{tot} derates linearly above T_A = 70°C by 24.0 mW/°C
(4) For TSSOP package: P_{tot} derates linearly above T_A = 70°C by 10.5 mW/°C

7.2 ESD Ratings

			VALUE	UNIT
$V_{(ESD)}$	Electrostatic discharge	Human body model (HBM), per ANSI/ESDA/JEDEC JS-001, all pins[1]	±2000	V
		Charged device model (CDM), per ANSI/ESDA/JEDEC JS-002, all pins[2]	±500	

(1) JEDEC document JEP155 states that 500-V HBM allows safe manufacturing with a standard ESD control process.
(2) JEDEC document JEP157 states that 250-V CDM allows safe manufacturing with a standard ESD control process.

7.3 Recommended Operating Conditions: TMUX821x Devices

over operating free-air temperature range (unless otherwise noted)

		MIN	NOM	MAX	UNIT
V_{DD} – V_{SS} [1]	Power supply voltage differential	10		100	V
V_{DD}	Positive power supply voltage	10		100	V
V_S or V_D [2]	Signal path input/output voltage (source or drain pin)	V_{SS}		V_{DD}	V
V_{SEL}	Logic input pin voltage	0		48	V
T_A	Ambient temperature	–40		125	°C
I_S or $I_{D\ (CONT)}$	Source or drain continuous current (Sx, D)			I_{DC} [3]	mA

(1) V_{DD} and V_{SS} can be any value as long as 10 V ≤ (V_{DD} – V_{SS}) ≤ 100 V, and the minimum V_{DD} is met.
(2) V_S or V_D is the voltage on any Source or Drain pins.
(3) Refer to *Source or Drain Continuous Current* table for I_{DC} specifications.

Copyright © 2023 Texas Instruments Incorporated

7.4 ソースまたはドレイン連続電流

自由気流での動作温度範囲内 (特に記述のない限り)

	パッケージ			最小値	公称値	最大値	単位
I_{DC} 1 チャネル[(1)]	PW (TSSOP) RUM (WQFN)	1 チャネルのスイッチを流れる連続電流	T_A = 25℃			200	mA
			T_A = 85℃			200	
			T_A = 125℃			200	
I_{DC} すべてのチャネル[(2)]	PW (TSSOP)	すべてのチャネルで同時にスイッチを流れる連続電流	T_A = 25℃			185	mA
			T_A = 85℃			125	
			T_A = 125℃			65	
I_{DC} すべてのチャネル[(2)]	RUM (WQFN)	すべてのチャネルで同時にスイッチを流れる連続電流	T_A = 25℃			200	mA
			T_A = 85℃			190	
			T_A = 125℃			100	

(1) 一度に 1 つのチャネルに表示される最大連続電流。
(2) 一度にすべてのチャネルに表示される最大連続電流。パッケージの制限に違反しないように、最大消費電力 (P_{tot}) を参照してください。

7.5 ドレイン・パルス電流のソース

自由気流での動作温度範囲内 (特に記述のない限り)

	パッケージ			最小値	公称値	最大値	単位
I_{DC} 1 チャネル[(1)]	PW (TSSOP)	1 チャネルのスイッチを流れるパルス[(3)]電流	T_A = 25℃			370	mA
			T_A = 85℃			310	
			T_A = 125℃			240	
I_{DC} すべてのチャネル[(2)]	PW (TSSOP)	すべてのチャネルで同時にスイッチを流れるパルス[(3)]電流	T_A = 25℃			185	mA
			T_A = 85℃			155	
			T_A = 125℃			120	
I_{DC} 1 チャネル[(1)]	RUM (WQFN)	1 チャネルのスイッチを流れるパルス[(3)]電流	T_A = 25℃			560	mA
			T_A = 85℃			470	
			T_A = 125℃			365	
I_{DC} すべてのチャネル[(2)]	RUM (WQFN)	すべてのチャネルで同時にスイッチを流れるパルス[(3)]電流	T_A = 25℃			280	mA
			T_A = 85℃			235	
			T_A = 125℃			180	

(1) 一度に 1 つのチャネルに表示される最大連続電流。
(2) 一度にすべてのチャネルに表示される最大連続電流。パッケージの制限に違反しないように、最大消費電力 (P_{tot}) を参照してください。
(3) 1ms でパルス発信、10% のデューティ・サイクル

7.6 Thermal Information

THERMAL METRIC[1]		TMUX821x PW (TSSOP) 16 PINS	TMUX821x RUM (WQFN) 16 PINS	UNIT
$R_{\theta JA}$	Junction-to-ambient thermal resistance	96.0	41.6	°C/W
$R_{\theta JC(top)}$	Junction-to-case (top) thermal resistance	26.8	25.3	°C/W
$R_{\theta JB}$	Junction-to-board thermal resistance	42.7	16.0	°C/W
Ψ_{JT}	Junction-to-top characterization parameter	1.2	0.3	°C/W
Ψ_{JB}	Junction-to-board characterization parameter	42.0	16.0	°C/W
$R_{\theta JC(bot)}$	Junction-to-case (bottom) thermal resistance	N/A	3.1	°C/W

(1) For more information about traditional and new thermal metrics, see the Semiconductor and IC Package Thermal Metrics application report.

7.7 Electrical Characteristics (Global): TMUX821x Devices

over operating free-air temperature range (unless otherwise noted)
typical at V_{DD} = +36 V, V_{SS} = –36 V, GND = 0 V and T_A = 25℃ (unless otherwise noted)

PARAMETER		TEST CONDITIONS	T_A	MIN	TYP	MAX	UNIT
LOGIC INPUTS							
V_{IH}	Logic voltage high		–40°C to +125°C	1.3		48	V
V_{IL}	Logic voltage low		–40°C to +125°C	0		0.8	V
I_{IH}	Input leakage current	Logic inputs = 0 V, 5 V, or 48 V	–40°C to +125°C		0.4	3.8	µA
I_{IL}	Input leakage current	Logic inputs = 0 V, 5 V, or 48 V	–40°C to +125°C	–0.2	–0.005		µA
C_{IN}	Logic input capacitance		–40°C to +125°C		3		pF
POWER SUPPLY							
I_{DD}	V_{DD} supply current	Logic inputs = 0 V, 5 V, or 48 V	25°C		350	800	µA
			–40°C to +85°C			800	µA
			–40°C to +125°C			900	µA
I_{SS}	V_{SS} supply current	Logic inputs = 0 V, 5 V, or 48 V	25°C		350	800	µA
			–40°C to +85°C			800	µA
			–40°C to +125°C			900	µA

Copyright © 2023 Texas Instruments Incorporated

7.8 Electrical Characteristics (±15-V Dual Supply)

V_{DD} = +15 V ± 10%, V_{SS} = –15 V ± 10%, GND = 0 V (unless otherwise noted)
Typical at T_A = 25°C (unless otherwise noted)

PARAMETER		TEST CONDITIONS	T_A	MIN	TYP	MAX	UNIT
ANALOG SWITCH							
R_{ON}	On-resistance	V_S = –10 V to +10 V I_D = –10 mA	25°C		5	7	Ω
			–40°C to +85°C			8	
			–40°C to +125°C			10	
ΔR_{ON}	On-resistance mismatch between channels	V_S = –10 V to +10 V I_D = –10 mA	25°C		0.2	0.3	Ω
			–40°C to +85°C			0.4	
			–40°C to +125°C			0.5	
$R_{ON\ FLAT}$	On-resistance flatness	V_S = –10 V to +10 V I_D = –10 mA	25°C		0.07		Ω
$R_{ON\ DRIFT}$	On-resistance drift	V_S = 0 V, I_S = –10 mA	–40°C to +125°C		0.03		Ω/°C
$I_{S(OFF)}$	Source off leakage current(1)	V_{DD} = 16.5 V, V_{SS} = –16.5 V Switch state is off V_S = +10 V / –10 V V_D = –10 V / +10 V	25°C		0.01		nA
			–40°C to +85°C	–4		4	
			–40°C to +125°C	–40		40	
$I_{D(OFF)}$	Drain off leakage current(1)	V_{DD} = 16.5 V, V_{SS} = –16.5 V Switch state is off V_S = +10 V / –10 V V_D = –10 V / +10 V	25°C		0.01		nA
			–40°C to +85°C	–4		4	
			–40°C to +125°C	–40		40	
$I_{S(ON)}$ $I_{D(ON)}$	Channel on leakage current(2)	V_{DD} = 16.5 V, V_{SS} = –16.5 V Switch state is on V_S = V_D = ±10 V	25°C		0.01		nA
			–40°C to +85°C	–1		1	
			–40°C to +125°C	–2		2	
$\Delta I_{S(ON)}$ $\Delta I_{D(ON)}$	Leakage current mismatch between channels(2)	V_{DD} = 16.5 V, V_{SS} = –16.5 V Switch state is on V_S = V_D = ±10 V	25°C		5		pA
			85°C		35		
			125°C		120		

(1) When V_S is positive,V_D is negative. And when V_S is negative, V_D is positive.
(2) When V_S is at a voltage potential, V_D is floating. And when V_D is at a voltage potential, V_S is floating.

7.9 Electrical Characteristics (±36-V Dual Supply)

V_{DD} = +36 V ± 10%, V_{SS} = –36 V ± 10%, GND = 0 V (unless otherwise noted)
Typical at T_A = 25°C (unless otherwise noted)

PARAMETER		TEST CONDITIONS	T_A	MIN	TYP	MAX	UNIT
ANALOG SWITCH							
R_{ON}	On-resistance	V_S = –25 V to +25 V I_D = –10 mA	25°C		5	7	Ω
			–40°C to +85°C			8	
			–40°C to +125°C			10	
ΔR_{ON}	On-resistance mismatch between channels	V_S = –25 V to +25 V I_D = –10 mA	25°C		0.1	0.3	Ω
			–40°C to +85°C			0.4	
			–40°C to +125°C			0.5	
$R_{ON\ FLAT}$	On-resistance flatness	V_S = –25 V to +25 V I_D = –10 mA	25°C		0.12		Ω
$R_{ON\ DRIFT}$	On-resistance drift	V_S = 0 V, I_S = –10 mA	–40°C to +125°C		0.03		Ω/°C
$I_{S(OFF)}$	Source off leakage current(1)	V_{DD} = 39.6 V, V_{SS} = –39.6 V Switch state is off V_S = +25 V / –25 V V_D = –25 V / +25 V	25°C		0.01		nA
			–40°C to +85°C	–4		4	
			–40°C to +125°C	–40		40	
$I_{D(OFF)}$	Drain off leakage current(1)	V_{DD} = 39.6 V, V_{SS} = –39.6 V Switch state is off V_S = +25 V / –25 V V_D = –25 V / +25 V	25°C		0.01		nA
			–40°C to +85°C	–4		4	
			–40°C to +125°C	–40		40	
$I_{S(ON)}$ $I_{D(ON)}$	Channel on leakage current(2)	V_{DD} = 39.6 V, V_{SS} = –39.6 V Switch state is on V_S = V_D = ±25 V	25°C		0.01		nA
			–40°C to +85°C	–1		1	
			–40°C to +125°C	–2		2	
$\Delta I_{S(ON)}$ $\Delta I_{D(ON)}$	Leakage current mismatch between channels(2)	V_{DD} = 39.6 V, V_{SS} = –39.6 V Switch state is on V_S = V_D = ±25 V	25°C		5		pA
			85°C		35		
			125°C		120		

(1) When V_S is positive,V_D is negative. And when V_S is negative, V_D is positive.
(2) When V_S is at a voltage potential, V_D is floating. And when V_D is at a voltage potential, V_S is floating.

Copyright © 2023 Texas Instruments Incorporated

7.10 Electrical Characteristics (±50-V Dual Supply)

V_{DD} = +50 V, V_{SS} = –50 V, GND = 0 V (unless otherwise noted)
Typical at T_A = 25°C (unless otherwise noted)

PARAMETER		TEST CONDITIONS	T_A	MIN	TYP	MAX	UNIT
ANALOG SWITCH							
R_{ON}	On-resistance	V_S = –45 V to 45 V I_D = –10 mA	25°C		5	7	Ω
			–40°C to +85°C			8	
			–40°C to +125°C			10	
ΔR_{ON}	On-resistance mismatch between channels	V_S = –45 V to 45 V I_D = –10 mA	25°C		0.2	0.3	Ω
			–40°C to +85°C			0.4	
			–40°C to +125°C			0.5	
$R_{ON\ FLAT}$	On-resistance flatness	V_S = –45 V to 45 V I_D = –10 mA	25°C		0.13		Ω
$R_{ON\ DRIFT}$	On-resistance drift	V_S = 0 V, I_S = –10 mA	–40°C to +125°C		0.03		Ω/°C
$I_{S(OFF)}$	Source off leakage current(1)	V_{DD} = 50 V, V_{SS} = –50 V Switch state is off V_S = +45 V / –45 V V_D = –45 V / +45 V	25°C		0.01		nA
			–40°C to +85°C	–4		4	
			–40°C to +125°C	–40		40	
$I_{D(OFF)}$	Drain off leakage current(1)	V_{DD} = 50 V, V_{SS} = –50 V Switch state is off V_S = +45 V / –45 V V_D = –45 V / +45 V	25°C		0.01		nA
			–40°C to +85°C	–4		4	
			–40°C to +125°C	–40		40	
$I_{S(ON)}$ $I_{D(ON)}$	Channel on leakage current(2)	V_{DD} = 50 V, V_{SS} = –50 V Switch state is on V_S = V_D = ±45 V	25°C		0.01		nA
			–40°C to +85°C	–2		2	
			–40°C to +125°C	–5		5	
$\Delta I_{S(ON)}$ $\Delta I_{D(ON)}$	Leakage current mismatch between channels(2)	V_{DD} = 50 V, V_{SS} = –50 V Switch state is on V_S = V_D = ±45 V	25°C		10		pA
			85°C		50		
			125°C		220		

(1) When V_S is positive,V_D is negative. And when V_S is negative, V_D is positive.
(2) When V_S is at a voltage potential, V_D is floating. And when V_D is at a voltage potential, V_S is floating.

7.11 Electrical Characteristics (72-V Single Supply)

V_{DD} = +72 V ± 10%, V_{SS} = 0 V, GND = 0 V (unless otherwise noted)
Typical at T_A = 25°C (unless otherwise noted)

PARAMETER		TEST CONDITIONS	T_A	MIN	TYP	MAX	UNIT
ANALOG SWITCH							
R_{ON}	On-resistance	V_S = 0 V to 60 V I_D = –10 mA	25°C		5	7	Ω
			–40°C to +85°C			8	
			–40°C to +125°C			10	
ΔR_{ON}	On-resistance mismatch between channels	V_S = 0 V to 60 V I_D = –10 mA	25°C		0.2	0.3	Ω
			–40°C to +85°C			0.4	
			–40°C to +125°C			0.5	
$R_{ON\ FLAT}$	On-resistance flatness	V_S = 0 V to 60 V I_D = –10 mA	25°C		0.05		Ω
$R_{ON\ DRIFT}$	On-resistance drift	V_S = 0 V, I_S = –10 mA	–40°C to +125°C		0.03		Ω/°C
$I_{S(OFF)}$	Source off leakage current(1)	Switch state is off V_S = +60 V / 1 V V_D = 1 V / +60 V	25°C		0.01		nA
			–40°C to +85°C	–4		4	
			–40°C to +125°C	–40		40	
$I_{D(OFF)}$	Drain off leakage current(1)	Switch state is off V_S = +60 V / 1 V V_D = 1 V / +60 V	25°C		0.01		nA
			–40°C to +85°C	–4		4	
			–40°C to +125°C	–40		40	
$I_{S(ON)}$ $I_{D(ON)}$	Channel on leakage current(2)	Switch state is on V_S = V_D = 1 V / +60 V	25°C		0.01		nA
			–40°C to +85°C	–2		2	
			–40°C to +125°C	–5		5	
$\Delta I_{S(ON)}$ $\Delta I_{D(ON)}$	Leakage current mismatch between channels(2)	Switch state is on V_S = V_D = 1 V / +60 V	25°C		15		pA
			85°C		75		
			125°C		300		

(1) When V_S is 60 V, V_D is 1 V. Or when V_S is 1 V, V_D is 60 V.
(2) When V_S is at a voltage potential, V_D is floating. Or when V_D is at a voltage potential, V_S is floating.

Copyright © 2023 Texas Instruments Incorporated

7.12 Electrical Characteristics (100-V Single Supply)

V_{DD} = +100 V, V_{SS} = 0 V, GND = 0 V (unless otherwise noted)
Typical at T_A = 25°C (unless otherwise noted)

PARAMETER		TEST CONDITIONS	T_A	MIN	TYP	MAX	UNIT
ANALOG SWITCH							
R_{ON}	On-resistance	V_S = 0 V to +95 V I_D = –10 mA	25°C		5	7	Ω
			–40°C to +85°C			8	
			–40°C to +125°C			10	
ΔR_{ON}	On-resistance mismatch between channels	V_S = 0 V to +95 V I_D = –10 mA	25°C		0.2	0.3	Ω
			–40°C to +85°C			0.4	
			–40°C to +125°C			0.5	
$R_{ON\ FLAT}$	On-resistance flatness	V_S = 0 V to +95 V I_D = –10 mA	25°C		0.07		Ω
$R_{ON\ DRIFT}$	On-resistance drift	V_S = 50 V, I_S = –10 mA	–40°C to +125°C		0.03		Ω/°C
$I_{S(OFF)}$	Source off leakage current(1)	Switch state is off V_S = +95 V / 1 V V_D = 1 V / +95 V	25°C		0.01		nA
			–40°C to +85°C	–4		4	
			–40°C to +125°C	–40		40	
$I_{D(OFF)}$	Drain off leakage current(1)	Switch state is off V_S = +95 V / 1 V V_D = 1 V / +95 V	25°C		0.01		nA
			–40°C to +85°C	–4		4	
			–40°C to +125°C	–40		40	
$I_{S(ON)}$ $I_{D(ON)}$	Channel on leakage current(2)	Switch state is on V_S = V_D = 1 V / +95 V	25°C		0.01		nA
			–40°C to +85°C	–4		4	
			–40°C to +125°C	–10		10	
$\Delta I_{S(ON)}$ $\Delta I_{D(ON)}$	Leakage current mismatch between channels(2)	Switch state is on V_S = V_D = 1 V / +95 V	25°C		15		pA
			85°C		100		
			125°C		450		

(1) When V_S is 95 V, V_D is 1 V. Or when V_S is 1 V, V_D is 95 V.
(2) When V_S is at a voltage potential, V_D is floating. Or when V_D is at a voltage potential, V_S is floating.

7.13 Switching Characteristics: TMUX821x Devices

over operating free-air temperature range (unless otherwise noted)
typical at V_{DD} = +36 V, V_{SS} = –36 V, GND = 0 V and T_A = 25°C (unless otherwise noted)

PARAMETER		TEST CONDITIONS	T_A	MIN	TYP	MAX	UNIT
$t_{ON\ (EN)}$	Turn-on time from enable	V_S = 10 V R_L = 10 kΩ, C_L = 15 pF	25°C		4		µs
			–40°C to +85°C			10	
			–40°C to +125°C			12	
$t_{OFF\ (EN)}$	Turn-off time from enable	V_S = 10 V R_L = 10 kΩ, C_L = 15 pF	25°C		100		ns
			–40°C to +85°C			600	
			–40°C to +125°C			700	
$t_{ON\ (VDD)}$	Device turn on time (V_{DD} to output)	V_{DD} ramp rate = 1 V/µs, V_S = 10 V R_L = 10 kΩ, C_L = 15pF	25°C		60		µs
t_{PD}	Propagation delay	R_L = 50 Ω , C_L = 5 pF	25°C		190		ps
Q_{INJ}	Charge injection	V_S = (V_{DD} + V_{SS}) / 2, C_L = 1 nF	25°C		–1.3		nC
O_{ISO}	Off isolation	R_L = 50 Ω , C_L = 5 pF V_S = (V_{DD} + V_{SS}) / 2, f = 100 kHz	25°C		–110		dB
X_{TALK}	Inter-channel crosstalk	R_L = 50 Ω , C_L = 5 pF V_S = (V_{DD} + V_{SS}) / 2, f = 100 kHz	25°C		–110		dB
BW	–3 dB bandwidth	R_L = 50 Ω , C_L = 5 pF V_S = (V_{DD} + V_{SS}) / 2	25°C		420		MHz
I_L	Insertion loss	R_L = 50 Ω , C_L = 5 pF V_S = (V_{DD} + V_{SS}) / 2, f = 1 MHz	25°C		–0.4		dB
THD+N	Total harmonic distortion + Noise	Dual supply voltage V_{PP} = 5 V, V_{BIAS} = (V_{DD} + V_{SS}) / 2 R_L = 1 kΩ , C_L = 5 pF, f = 20 Hz to 20 kHz	25°C		0.0008		%
$C_{S(OFF)}$	Source off capacitance	V_S = (V_{DD} + V_{SS}) / 2 V, f = 1 MHz	25°C		12		pF
$C_{D(OFF)}$	Drain off capacitance	V_S = (V_{DD} + V_{SS}) / 2 V, f = 1 MHz	25°C		12		pF
$C_{S(ON)}$, $C_{D(ON)}$	On capacitance	V_S = (V_{DD} + V_{SS}) / 2 V, f = 1 MHz	25°C		14		pF

Copyright © 2023 Texas Instruments Incorporated

7.14 Typical Characteristics

at T_A = 25°C, V_{DD} = +36 V, and V_{SS} = –36 V (unless otherwise noted)

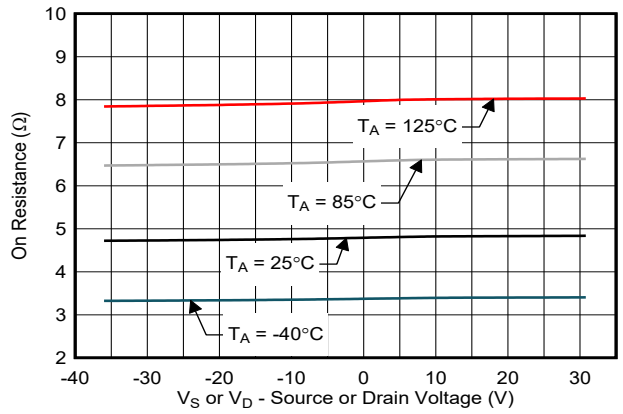

V_{DD} = 36 V, V_{SS} = –36 V
Flattest Ron Region

図 7-1. On-Resistance vs Source or Drain Voltage

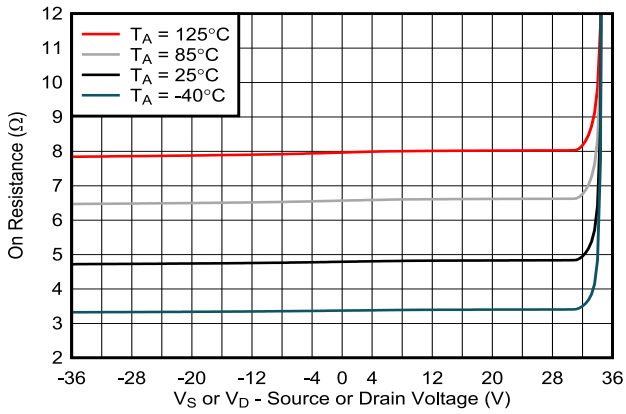

V_{DD} = 36 V, V_{SS} = –36 V

図 7-2. On-Resistance vs Source or Drain Voltage

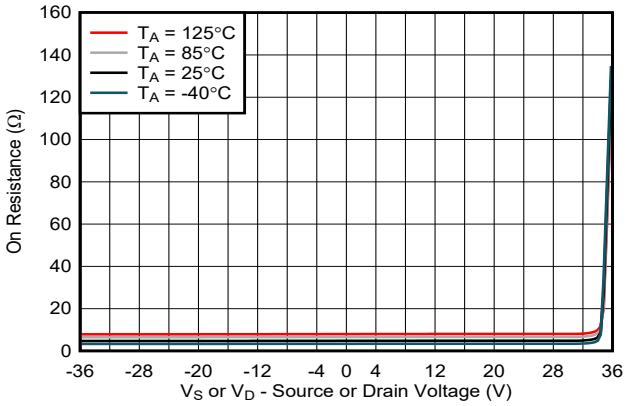

V_{DD} = 36 V, V_{SS} = –36 V

図 7-3. On-Resistance vs Source or Drain Voltage

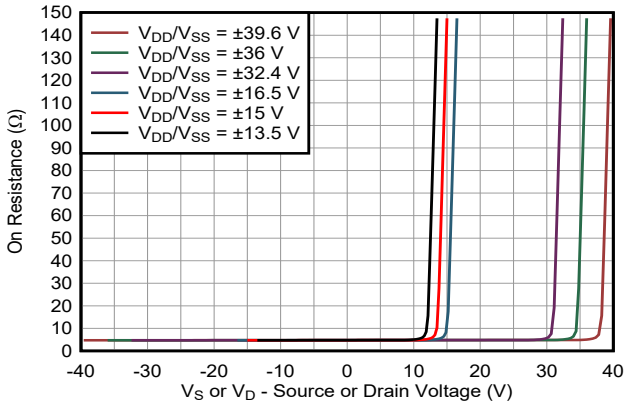

Dual Supply Voltages

図 7-4. On-Resistance vs Source or Drain Voltage

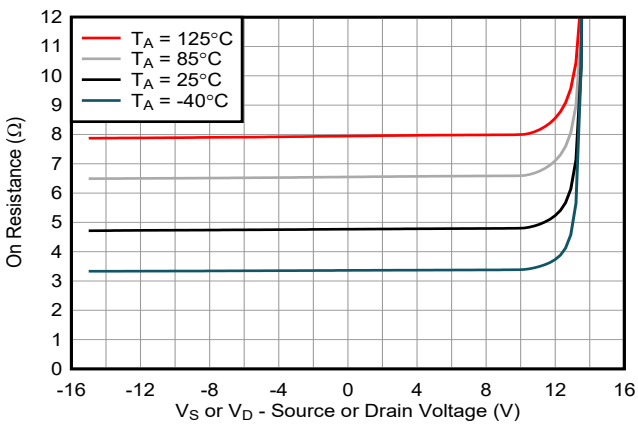

V_{DD} = 15 V, V_{SS} = –15 V

図 7-5. On-Resistance vs Source or Drain Voltage

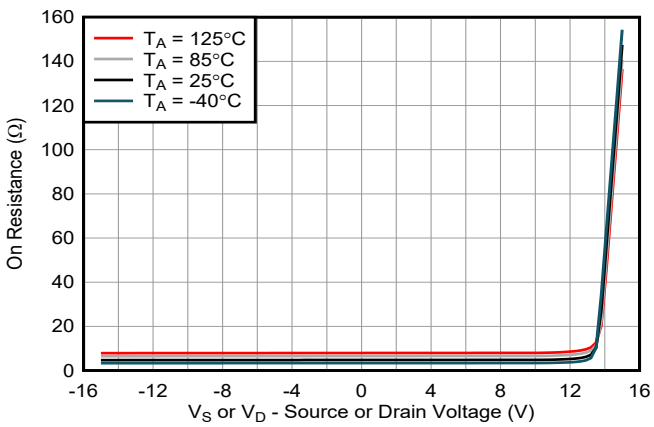

V_{DD} = 15 V, V_{SS} = –15 V

図 7-6. On-Resistance vs Source or Drain Voltage

7.14 Typical Characteristics (continued)

at T_A = 25°C, V_{DD} = +36 V, and V_{SS} = –36 V (unless otherwise noted)

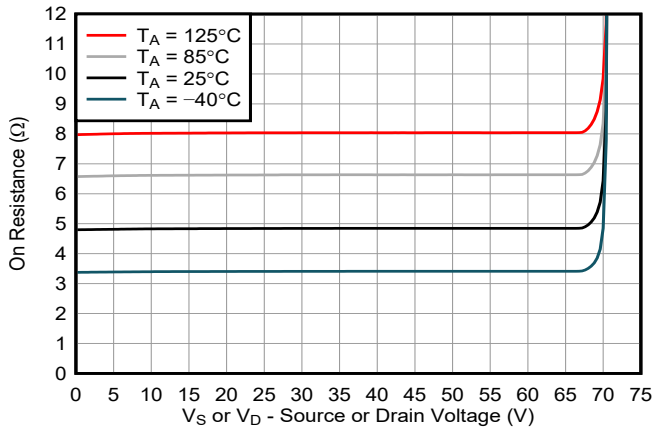

V_{DD} = 72 V, V_{SS} = 0 V

図 7-7. On-Resistance vs Source or Drain Voltage

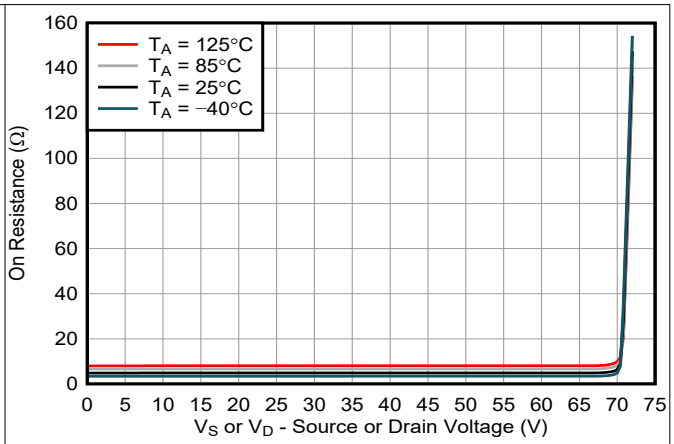

V_{DD} = 72 V, V_{SS} = 0 V

図 7-8. On-Resistance vs Source or Drain Voltage

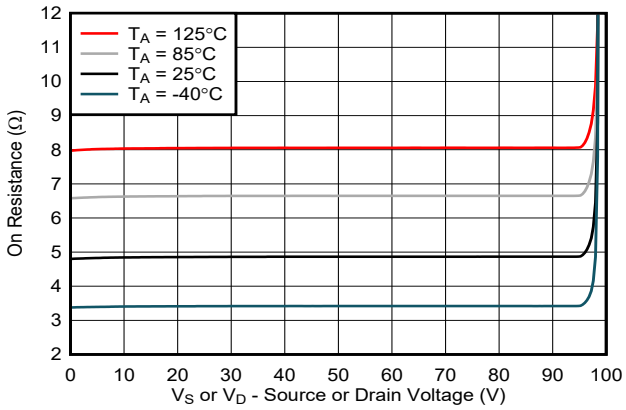

V_{DD} = 100 V, V_{SS} = 0 V

図 7-9. On-Resistance vs Source or Drain Voltage

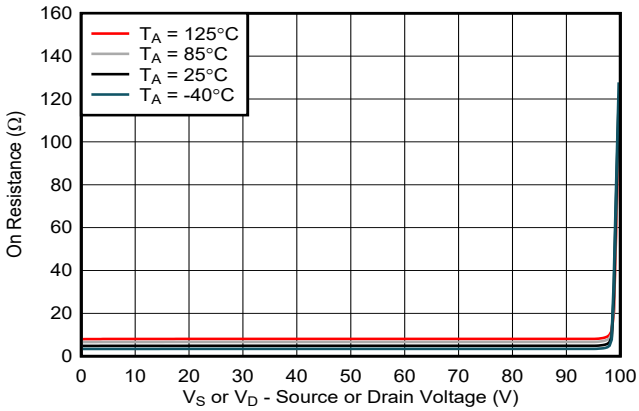

V_{DD} = 100 V, V_{SS} = 0 V

図 7-10. On-Resistance vs Source or Drain Voltage

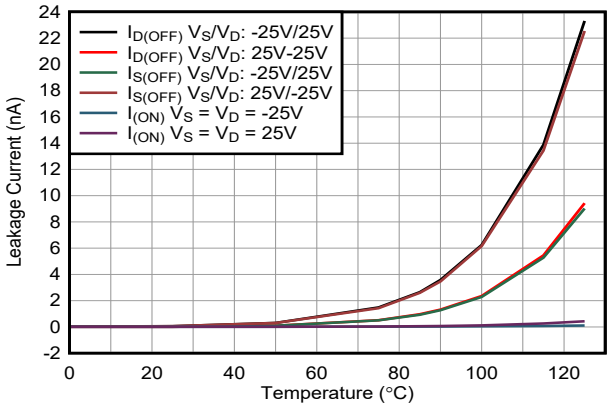

V_{DD} = 36 V, V_{SS} = –36 V

図 7-11. Leakage Current vs Temperature

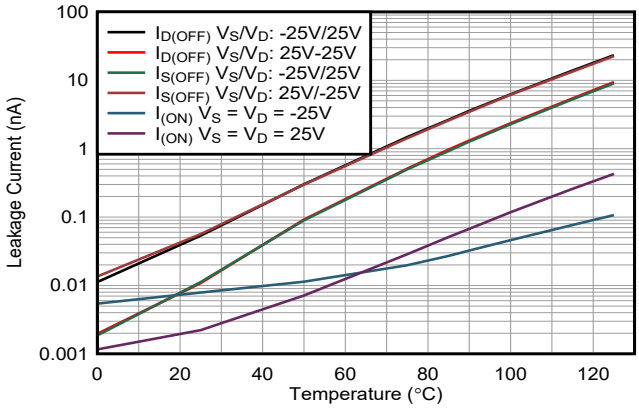

V_{DD} = 36 V, V_{SS} = –36 V

図 7-12. Leakage Current vs Temperature

Copyright © 2023 Texas Instruments Incorporated

7.14 Typical Characteristics (continued)

at T_A = 25°C, V_{DD} = +36 V, and V_{SS} = –36 V (unless otherwise noted)

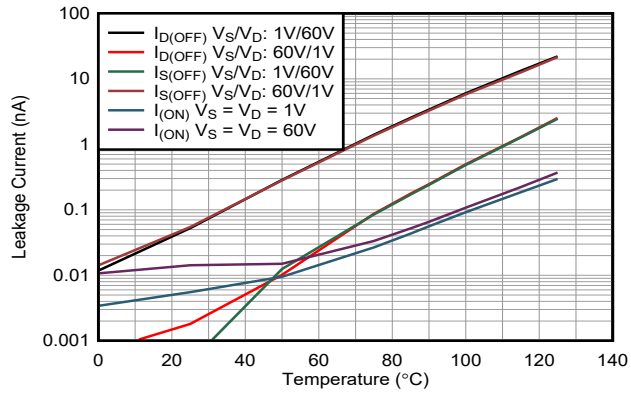

V_{DD} = 72 V, V_{SS} = 0 V

図 7-13. Leakage Current vs Temperature

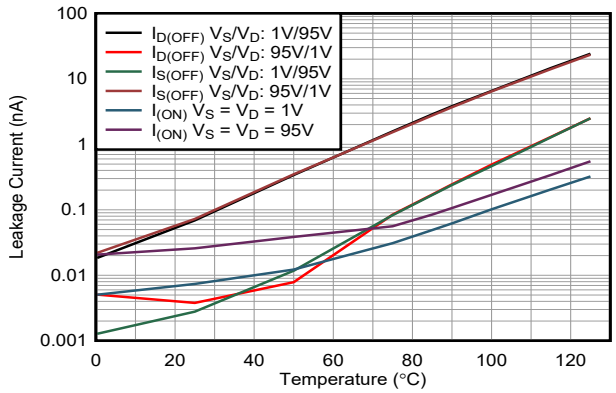

V_{DD} = 100 V, V_{SS} = 0 V

図 7-14. Leakage Current vs Temperature

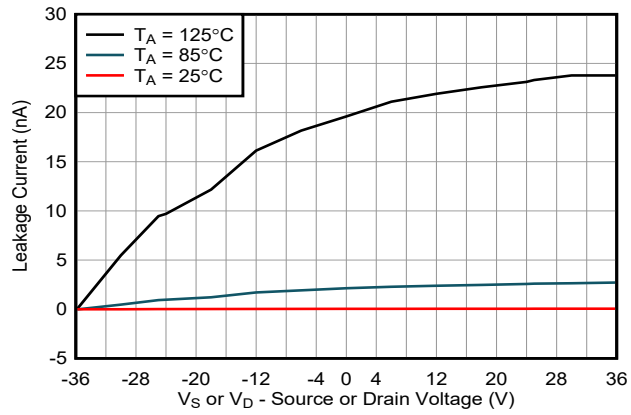

V_{DD} = 36 V, V_{SS} = –36 V

$I_{S(OFF)}$ and $I_{D(OFF)}$

図 7-15. Off-Leakage Current vs Source or Drain Voltage

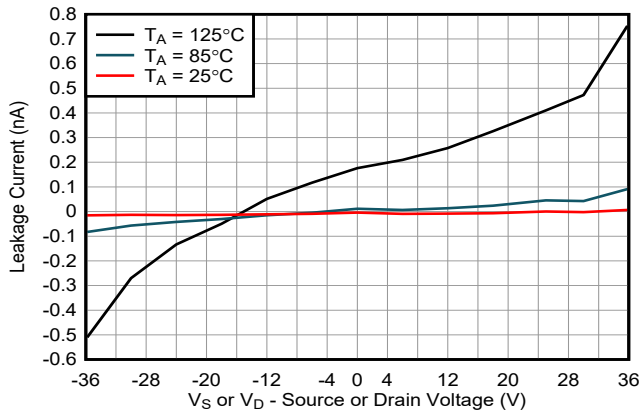

V_{DD} = 36 V, V_{SS} = –36 V

I_{ON}

図 7-16. On-Leakage Current vs Source or Drain Voltage

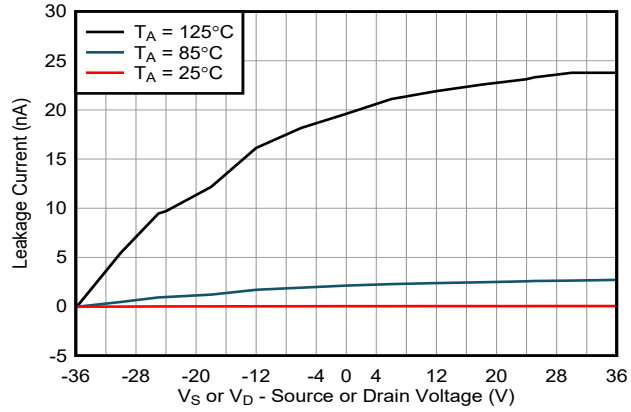

V_{DD} = 72 V, V_{SS} = 0 V

図 7-17. Off-Leakage Current vs Source or Drain Voltage

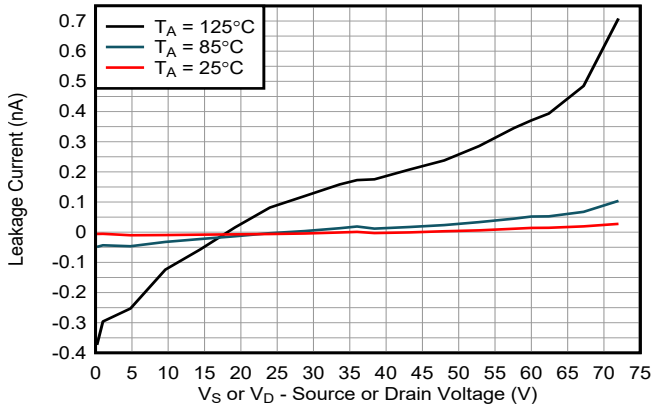

V_{DD} = 72 V, V_{SS} = 0 V

図 7-18. On-Leakage Current vs Source or Drain Voltage

7.14 Typical Characteristics (continued)

at T_A = 25°C, V_{DD} = +36 V, and V_{SS} = –36 V (unless otherwise noted)

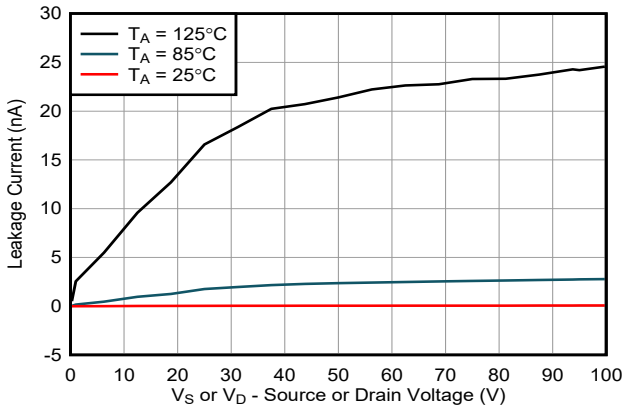

V_{DD} = 100 V, V_{SS} = 0 V

$I_{S(OFF)}$ and $I_{D(OFF)}$

図 7-19. Off-Leakage Current vs Source or Drain Voltage

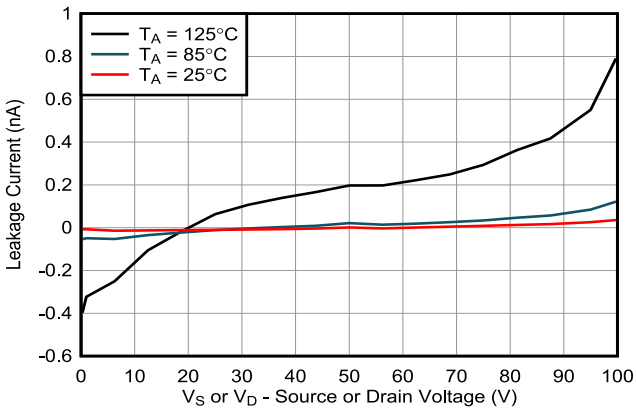

V_{DD} = 100 V, V_{SS} = 0 V

I_{ON}

図 7-20. On-Leakage Current vs Source or Drain Voltage

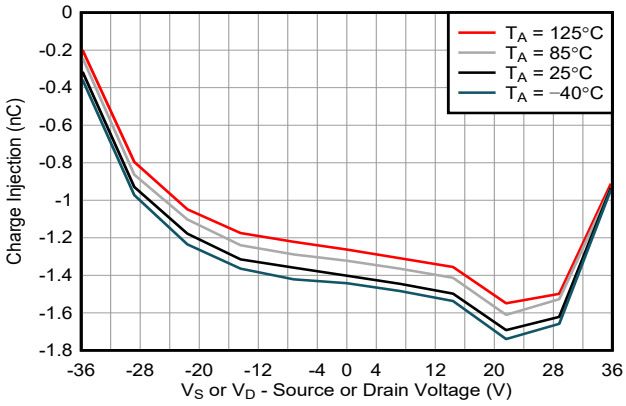

V_{DD} = 36 V, V_{SS} = –36 V

図 7-21. Charge Injection vs Source Voltage

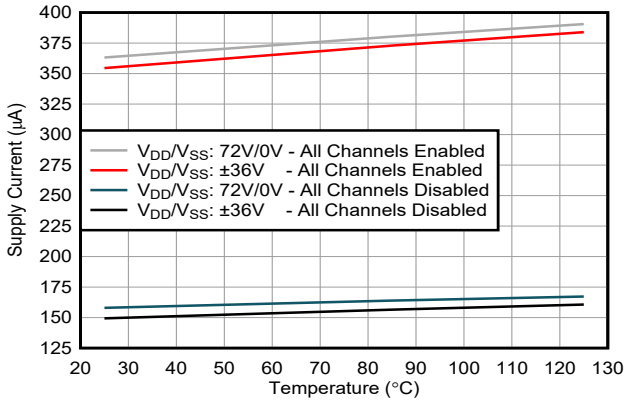

図 7-22. Supply Current vs Temperature

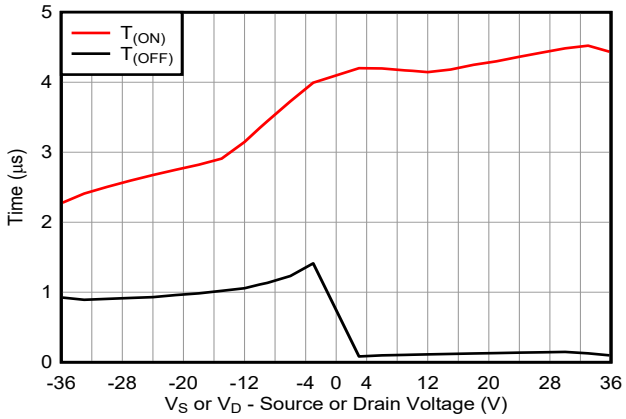

V_{DD} = 36 V, V_{SS} = –36 V

図 7-23. Turn-On and Turn-Off Times vs Source Voltage

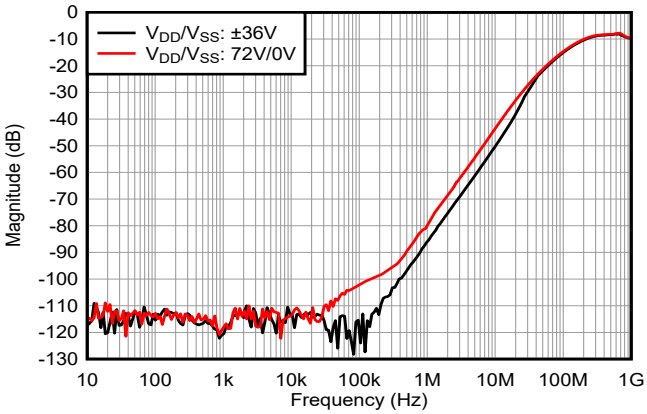

T_A = 25°C

図 7-24. Off Isolation vs Frequency

Copyright © 2023 Texas Instruments Incorporated

7.14 Typical Characteristics (continued)

at T_A = 25°C, V_{DD} = +36 V, and V_{SS} = –36 V (unless otherwise noted)

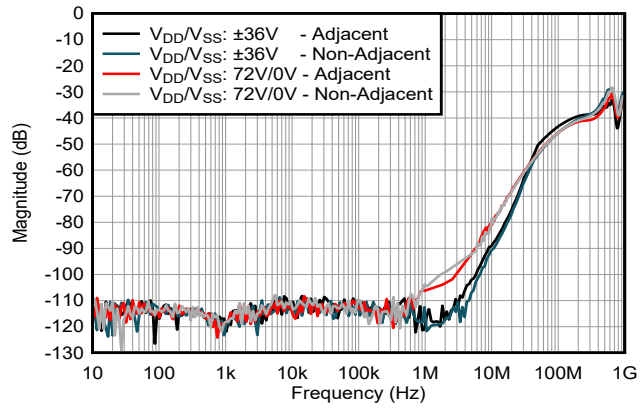

T_A = 25°C

図 7-25. Crosstalk vs Frequency

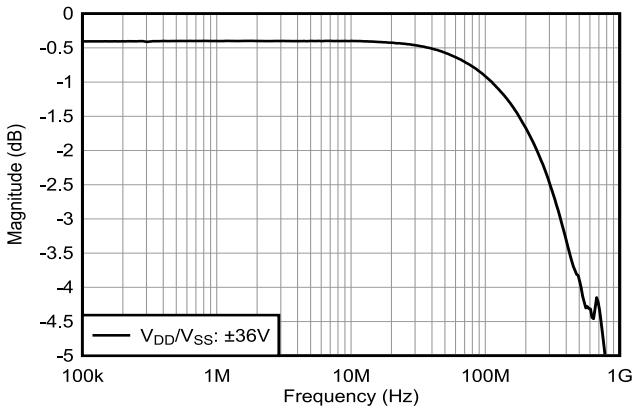

Bandwidth

図 7-26. Insertion Loss vs Frequency

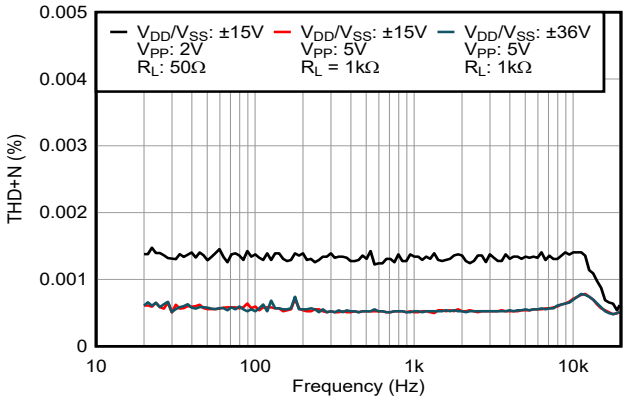

T_A = 25°C

図 7-27. THD+N vs Frequency

8 Parameter Measurement Information

8.1 On-Resistance

The On-Resistance of the TMUX821x is the ohmic resistance across the source (Sx) and drain (Dx) pins of the device. The On-Resistance varies with input voltage and supply voltage. The symbol R_{ON} is used to denote On-Resistance. 図 8-1 shows the measurement setup used to measure R_{ON}. ΔR_{ON} represents the difference between the R_{ON} of any two channels, while R_{ON_FLAT} denotes the flatness that is defined as the difference between the maximum and minimum value of On-Resistance measured over the specified analog signal range.

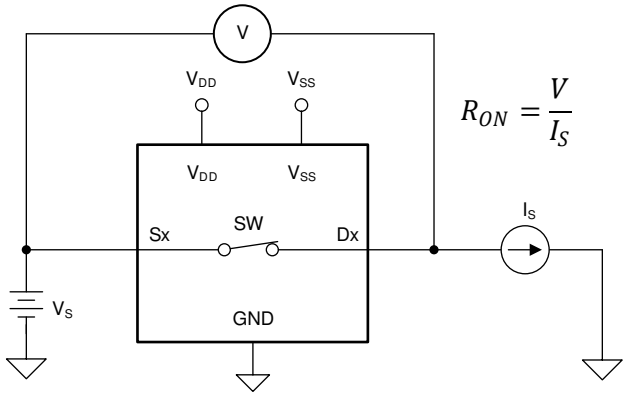

図 8-1. On-Resistance Measurement Setup

8.2 Off-Leakage Current

There are two types of leakage currents associated with a switch during the off state:

1. Source Off-Leakage current $I_{S(OFF)}$: the leakage current flowing into or out of the source pin when the switch is off.
2. Drain Off-Leakage current $I_{D(OFF)}$: the leakage current flowing into or out of the drain pin when the switch is off.

図 8-2 shows the setup used to measure both Off-Leakage currents.

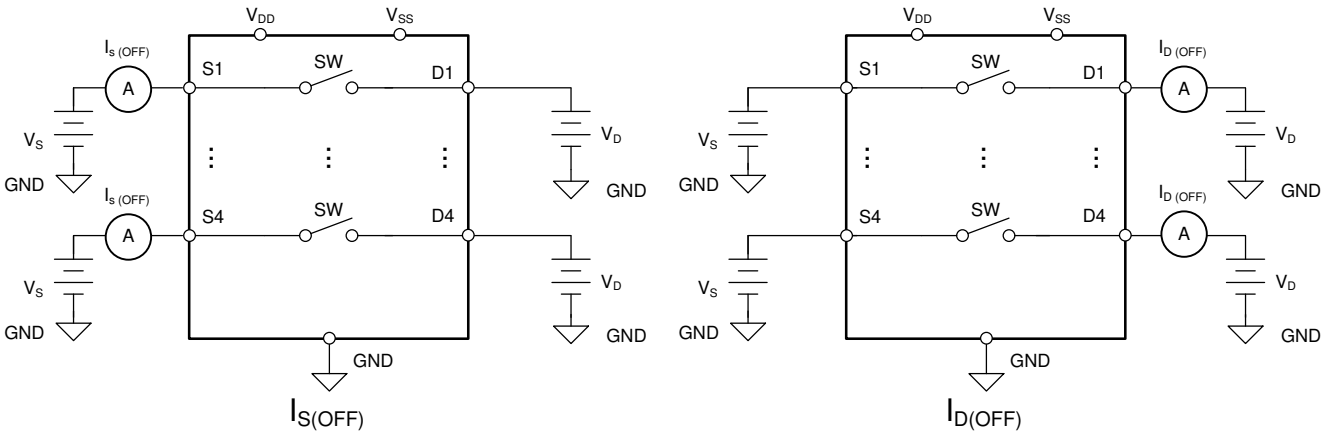

図 8-2. Off-Leakage Measurement Setup

Copyright © 2023 Texas Instruments Incorporated

8.3 On-Leakage Current

Source On-Leakage current ($I_{S(ON)}$) and drain On-Leakage current ($I_{D(ON)}$) denote the channel leakage currents when the switch is in the on state. $I_{S(ON)}$ is measured with the drain floating, while $I_{D(ON)}$ is measured with the source floating. 図 8-3 shows the circuit used for measuring the On-Leakage currents.

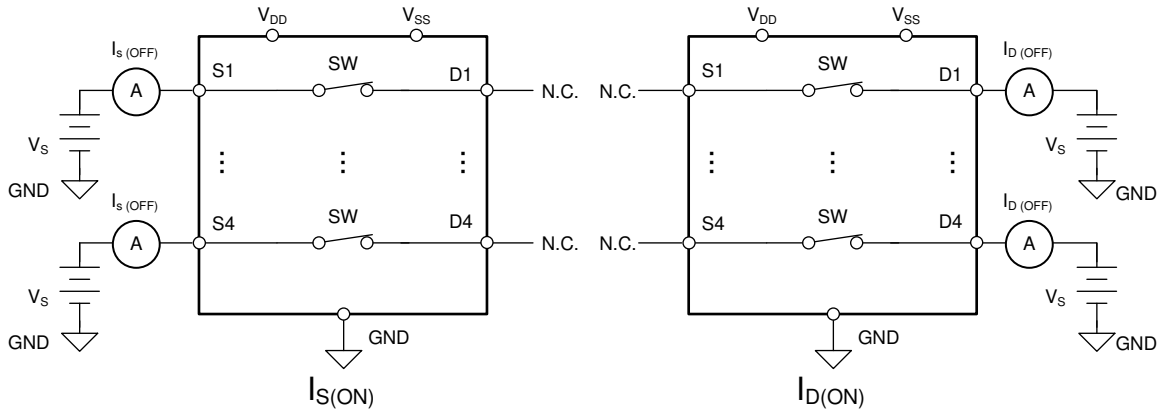

図 8-3. On-Leakage Measurement Setup

8.4 Device Turn-On and Turn-Off Time

Turn-On time (t_{ON}) is defined as the time taken by the output of the TMUX8211, TMUX8212, and TMUX8213 to rise to a 90% final value after the SELx signal has risen (for NC switches) or fallen (for NO switches) to a 50% final value. Turn-Off time (t_{OFF}) is defined as the time taken by the output of the TMUX8211, TMUX8212, and TMUX8213 to fall to a 10% initial value after the SELx signal has fallen (for NC switches) or risen (for NO switches) to a 50% initial value. 図 8-4 shows the setup used to measure t_{ON} and t_{OFF}.

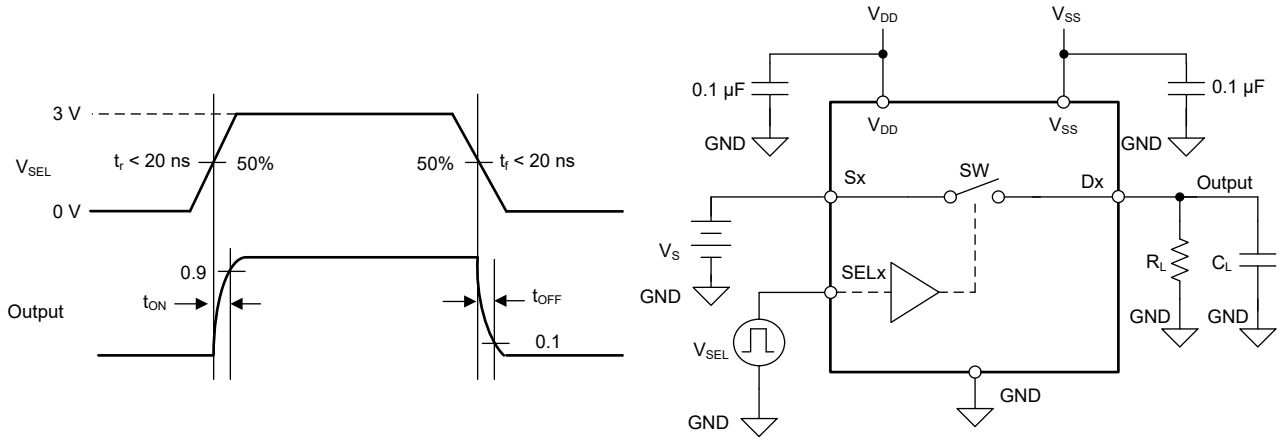

図 8-4. Enable Delay Measurement Setup

8.5 Charge Injection

Charge injection is a measure of the glitch impulse transferred from the digital input to the analog output during switching, and is denoted by the symbol Q_{INJ}. 図 8-5 shows the setup used to measure charge injection from the source to drain.

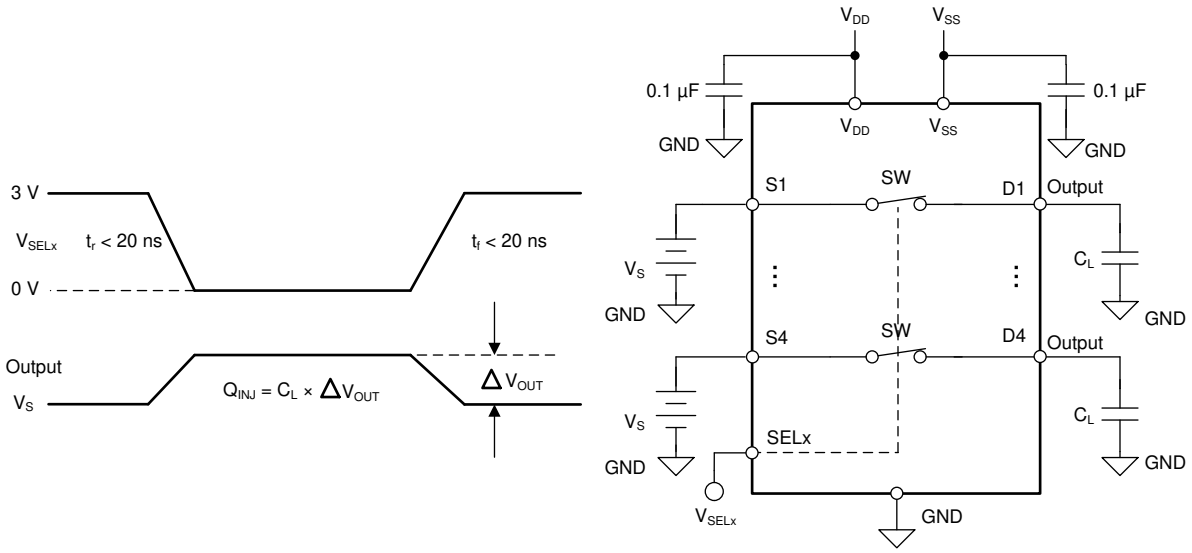

図 8-5. Charge-Injection Measurement Setup

8.6 Off Isolation

Off isolation is defined as the ratio of the signal at the drain pin (Dx) of the device when a signal is applied to the source pin (Sx) of an off-channel. The characteristic impedance, Z_O, for the measurement is 50 Ω. 図 8-6 and 式 1 shows the setup used to measure off isolation.

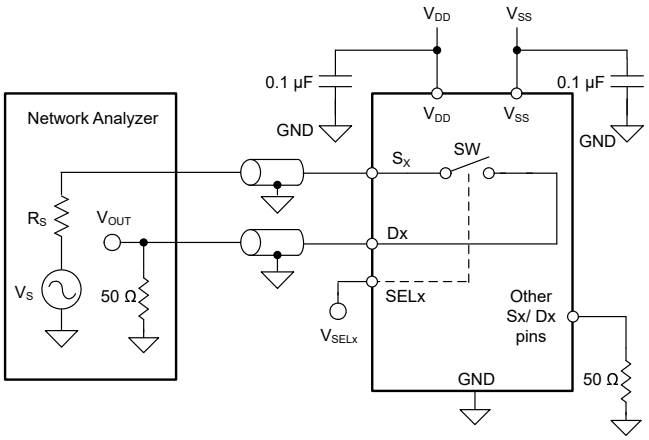

図 8-6. Off Isolation Measurement Setup

$$Off\ Isolation = 20 \times Log \frac{V_{OUT}}{V_S} \quad (1)$$

Copyright © 2023 Texas Instruments Incorporated

8.7 Crosstalk

Crosstalk (X_{TALK}) is defined as the ratio of the signal at the drain pin (Dx) of a different channel, when a signal is applied at the source pin (Sx) of an on-channel. The characteristic impedance, Z_O, for the measurement is 50 Ω, as shown in 図 8-7 and 式 2.

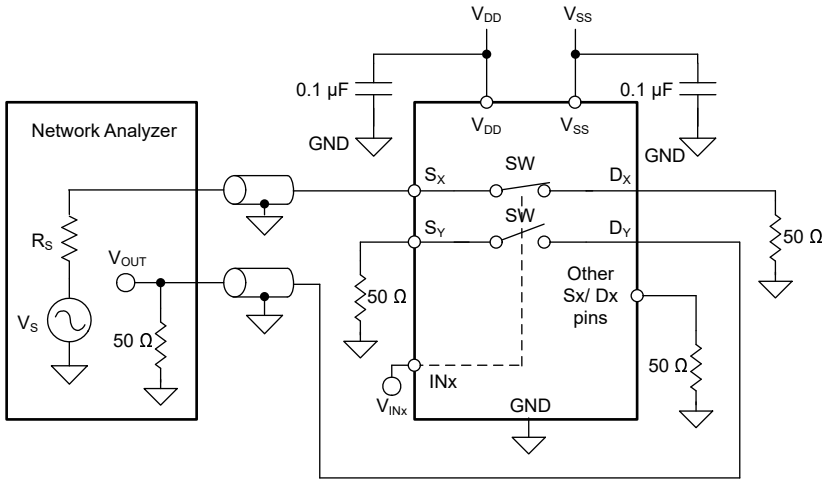

図 8-7. Inter-channel Crosstalk Measurement Setup

$$Inter - channel\ Crosstalk = 20 \times Log \frac{V_{OUT}}{V_S} \quad (2)$$

8.8 Bandwidth

Bandwidth (BW) is defined as the range of frequencies that are attenuated by < 3 dB when the input is applied to the source pin (Sx) of an on-channel, and the output is measured at the drain pin (Dx). 図 8-8 and 式 3 shows the setup used to measure bandwidth of the switch.

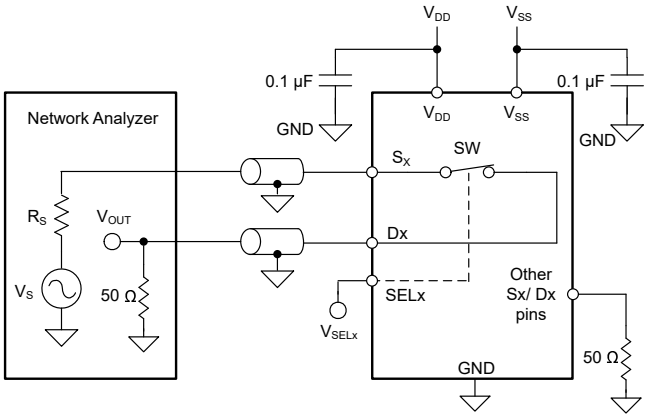

図 8-8. Bandwidth Measurement Setup

$$Bandwidth = 20 \times Log \frac{V_{OUT}}{V_S} \quad (3)$$

8.9 THD + Noise

The total harmonic distortion (THD) of a signal is a measurement of the harmonic distortion, and is defined as the ratio of the sum of the powers of all harmonic components to the power of the fundamental frequency at the multiplexer output. The On-Resistance of the device varies with the amplitude of the input signal and results in distortion when the drain pin is connected to a low-impedance load. Total harmonic distortion plus noise is denoted as THD+N. 図 8-9 shows the setup used to measure THD+N of the devices.

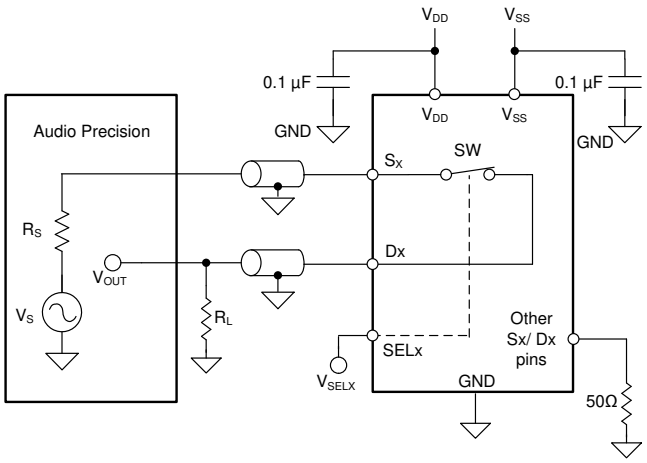

図 8-9. THD+N Measurement Setup

Copyright © 2023 Texas Instruments Incorporated

9 Detailed Description

9.1 Overview

The TMUX8211, TMUX8212 and TMUX8213 are a modern complementary metal-oxide semiconductor (CMOS) analog switches in quad single-pole single-throw configuration. The devices work well with dual supplies, a single supply, or asymmetric supplies.

9.2 Functional Block Diagram

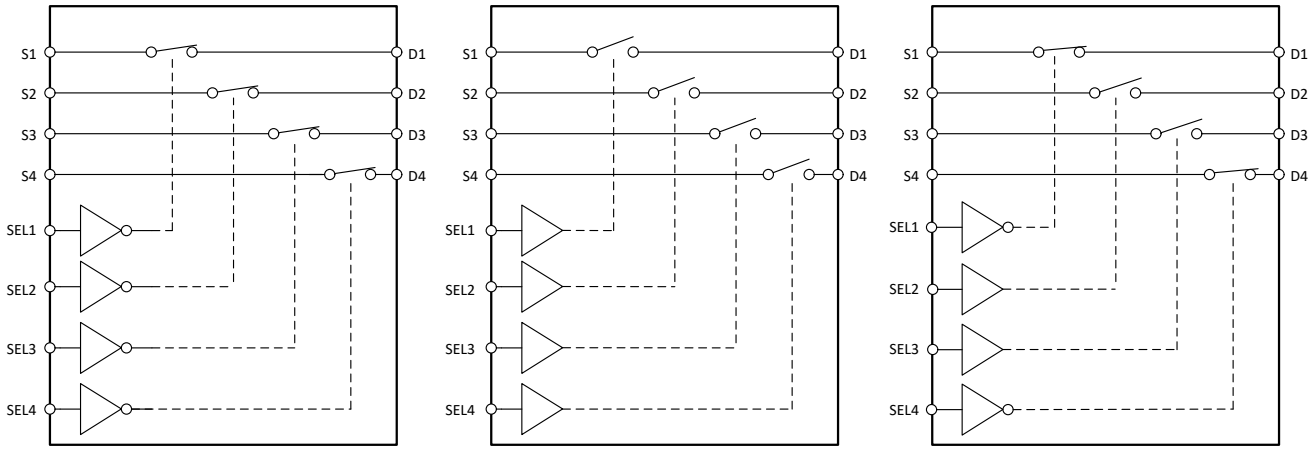

TMUX8211 TMUX8212 TMUX8213

ALL SWITCHES SHOWN FOR A LOGIC 0 INPUT

9.3 Feature Description

9.3.1 Bidirectional Operation

The devices conduct equally well from source (Sx) to drain (Dx) or from drain (Dx) to source (Sx). Each signal path has similar characteristics in both directions.

9.3.2 Flat On-Resistance

The TMUX821x devices are designed with a special switch architecture to produce ultra-flat On-Resistance (R_{ON}) across most of the switch input operating region. The flat R_{ON} response allows the device to be used in precision sensor applications since the R_{ON} is controlled regardless of the signals sampled. The architecture is implemented without a charge pump so no unwanted noise is produced from the device to affect sampling accuracy.

The flattest On-Resistance region extends from V_{SS} to roughly 5 V below V_{DD}. Once the signal is within 5 V of V_{DD} the On-Resistance will exponentially increase and may impact desired signal transmission.

9.3.3 Protection Features

These devices offer a number of protection features to enable robust system implementations.

9.3.3.1 Fail-Safe Logic

Fail-safe logic circuitry allows voltages on the logic control pins to be applied before the supply pins, protecting the device from potential damage. Additionally the fail safe logic feature allows the logic inputs of the mux to be interfaced with high voltages, allowing for simplified interfacing if only high voltage control signals are present. The logic inputs are protected against positive faults of up to +48 V in powered-off condition, but do not offer protection against negative over-voltage condition.

Fail-safe logic also allows the devices to interface with a voltage greater than V_{DD} on the control pins during normal operation to add maximum flexibility in system design. For example, with a V_{DD} = 15 V, the logic control pins could be connected to +24 V for a logic high signal which allows different types of signals, such as analog feedback voltages, to be used when controlling the logic inputs. Regardless of the supply voltage, the logic inputs can be interfaced as high as 48 V.

Copyright © 2023 Texas Instruments Incorporated

9.3.3.2 ESD Protection

All pins support HBM ESD protection level up to ±2 kV, which helps protect the devices from ESD events during the manufacturing process.

9.3.3.3 Latch-Up Immunity

Latch-Up is a condition where a low impedance path is created between a supply pin and ground. This condition is caused by a trigger (current injection or over-voltage), but once activated the low impedance path remains even after the trigger is no longer present. This low impedance path may cause system upset or catastrophic damage due to excessive current levels. The Latch-Up condition typically requires a power cycle to eliminate the low impedance path.

In the TMUX821x devices, an insulating oxide layer is placed on top of the silicon substrate to prevent any parasitic junctions from forming. As a result, the devices are Latch-Up immune under all circumstances by device construction.

The TMUX821x devices are constructed on silicon on insulator (SOI) based process where an oxide layer is added between the PMOS and NMOS transistor of each CMOS switch to prevent parasitic structures from forming. The oxide layer is also known as an insulating trench and prevents triggering of latch up events due to over-voltage or current injections. The Latch-Up immunity feature allows the TMUX821x to be used in harsh environments. For more information on Latch-Up immunity, refer to *Using Latch Up Immune Multiplexers to Help Improve System Reliability*.

9.3.4 1.8 V Logic Compatible Inputs

The TMUX821x devices have 1.8 V logic compatible control for all logic control inputs. 1.8 V logic level inputs allows the TMUX821x to interface with processors that have lower logic I/O rails and eliminates the need for an external translator, which saves both space and BOM cost. For more information on 1.8 V logic implementations, refer to *Simplifying Design with 1.8 V logic Muxes and Switches*.

9.3.5 Integrated Pull-Down Resistor on Logic Pins

The TMUX821x have internal weak Pull-Down resistors to GND to ensure the logic pins are not left floating. The value of this Pull-Down resistor is approximately 4 MΩ, but is clamped to 1 μA at higher voltages. This feature integrates up to four external components and reduces system size and cost.

Copyright © 2023 Texas Instruments Incorporated

9.4 Device Functional Modes

9.4.1 Normal Mode

In Normal Mode operation, signals of up to V_{DD} and V_{SS} can be passed through the switch from source (Sx) to drain (Dx) or from drain (Dx) to source (Sx). The select (SELx) pins determine which switch path to turn on, according to the Truth Table. The following conditions must be satisfied for the switch to stay in the ON condition:

- The difference between the primary supplies (V_{DD} – V_{SS}) must be greater than or equal to 10 V. With a minimum V_{DD} of 10 V.
- The input signals on the source (Sx) or the drain (Dx) must be between V_{DD} and V_{SS}.
- The logic control (SELx) must have selected the switch.

9.4.2 Truth Tables

表 9-1, 表 9-2, and 表 9-3 show the truth tables for the TMUX8211, TMUX8212, and TMUX8213, respectively.

表 9-1. TMUX8211 Truth Table

SEL #[(1)]	CHANNEL #
0	Channel # ON
1	Channel # OFF

(1) "#"designates the channel number controlled by SEL pin: "1, 2, 3, or 4"

表 9-2. TMUX8212 Truth Table

SEL #[(1)]	CHANNEL #
0	Channel # OFF
1	Channel # ON

(1) "#"designates the channel number controlled by SEL pin: "1, 2, 3, or 4"

表 9-3. TMUX8213 Truth Table

SEL1	SEL2	SEL3	SEL4	ON / OFF CHANNELS
0	X[(1)]	X	X	CHANNEL 1 ON
1	X	X	X	CHANNEL 1 OFF
X	0	X	X	CHANNEL 2 OFF
X	1	X	X	CHANNEL 2 ON
X	X	0	X	CHANNEL 3 OFF
X	X	1	X	CHANNEL 3 ON
X	X	X	0	CHANNEL 4 ON
X	X	X	1	CHANNEL 4 OFF

(1) "X" means "do not care."

If unused, then the SELx pins must be tied to GND or Logic High so that the devices do not consume additional current as highlighted in *Implications of Slow or Floating CMOS Inputs*. Unused signal path inputs (Sx or Dx) should be connected to GND for best performance.

10 Application and Implementation

注

以下のアプリケーション情報は、TI の製品仕様に含まれるものではなく、TI ではその正確性または完全性を保証いたしません。個々の目的に対する製品の適合性については、お客様の責任で判断していただくことになります。お客様は自身の設計実装を検証しテストすることで、システムの機能を確認する必要があります。

10.1 Application Information

The TMUX821x are high voltage switches capable of supporting analog and digital signals. The high voltage capability of these multiplexers allow them to be used in systems with high voltage signal swings, or in systems with high common mode voltages.

Additionally, the TMUX821x devices provide consistent analog parametric performance across the entire supply voltage range allowing the devices to be powered by the most convenient supply rails in the system while still providing excellent performance.

10.2 Typical Application

A common feature of many PMUs (precision measurement units) is the ability to change current ranges. This allows for a system defined current clamp when testing devices and reduces possible damage to the PMU and DUT (device under test). In high voltage PMUs, large relays are often used to enable this switching, but this comes with the trade-off of size. To reduce system size, a multi-channel high voltage switch can be added to facilitate this switching with minimal impact to system size and performance. The TMUX821x allows for switching between multiple current ranges, and has the added flexibility to use multiple channels in parallel for high current applications.

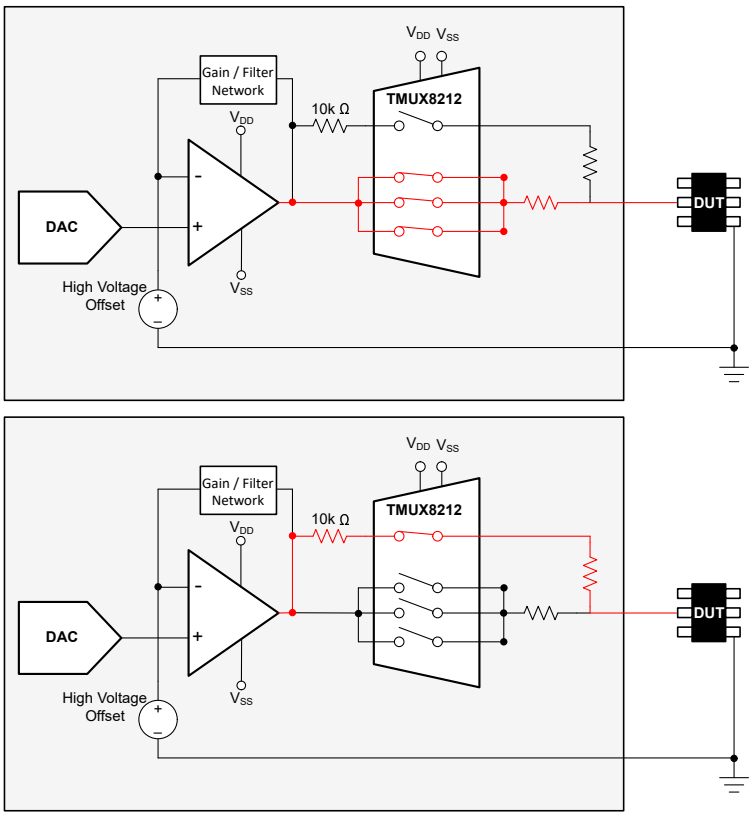

図 10-1. TMUX8212 Application Schematic

Copyright © 2023 Texas Instruments Incorporated

10.2.1 Design Requirements

表 10-1. Design Parameters

PARAMETERS	VALUES
Positive supply (V_{DD}) mux and Op Amps	36 V
Positive supply (V_{SS}) mux and Op Amps	-36 V
Maximum input or output signals with common mode shift	-36 V to 36 V
Control logic thresholds	1.8 V compatible, up to 48 V
Temperature range	-40°C to +125°C

10.2.2 Detailed Design Procedure

Multiplexing PMU systems enables a small, flexible solution that can be used over a wide range of current ranges. TI's high voltage multiplexers offer a size advantage over typical relay solutions while still achieving an extremely low level of distortion, noise, and leakage. This high voltage multiplexer can be use in tandem with high voltage operational amplifiers and DACs to create an accurate PMU with excellent signal-to-noise ratio.

In this example application, the TMUX8212 is paired with a high voltage amplifier and a DAC. The DAC generates an arbitrary voltage signal that feeds into the amplifier. An additional high voltage offset is also fed into the amplifier to add any needed common mode shift. This arbitrary signal is then passed through a current limiting resistor before reaching the DUT. To change the current range of the system, different current limiting resistors are added in series with each channel of the multiplexer. In this example, the first channel of the multiplexer uses a 10 kΩ resistor for the low current clamp. The maximum output current of the PMU in this range is 5 mA because of this design. During the system operation, the PMU is set to this lower current range in the beginning of the test routine. After the DUT is initially checked in this range and is operating normally with no unexpected shorts, the current range can be switched to high current. This way the PMU and DUT will not be unnecessarily damaged from excess current due to a short. In this example, the remaining three channels of the TMUX8212 are connected in parallel, increasing the maximum current through the device and reducing the low On-Resistance. Because of the flexibility of the TMUX8212, this could easily be modified to fit any system need. For example, if less maximum current is needed, then two channels could be connected in parallel instead of three, and the additional single channel could be used to add a third current range option. The additional input channels make this multiplexed application increasingly valuable by greatly reducing solution size.

The TMUX821x switches have exceptionally flat On-Resistance and low leakage currents across the signal voltage range. The ultra-flat On-Resistance keeps the current clamp constant across the signal voltage range, and the low leakage current reduces the potential noise/offset when measuring on the lowest current range. Additionally, excellent crosstalk and off-isolation performance allows the TMUX821x devices to perform well in multi-channel switching applications without having an unselected channel impact the measurement on selected channels.

10.2.3 Application Curves

The example application utilizes the excellent leakage and On-Resistance flatness performance of the TMUX821x devices. 図 10-2 shows the leakage current for a channel that is ON across a varying source voltage. 図 10-3 shows the extremely flat On-Resistance across source voltage while operating within the flattest R_{ON} range of the TMUX821x devices. These features make the devices an ideal solution for applications that require excellent linearity and low distortion.

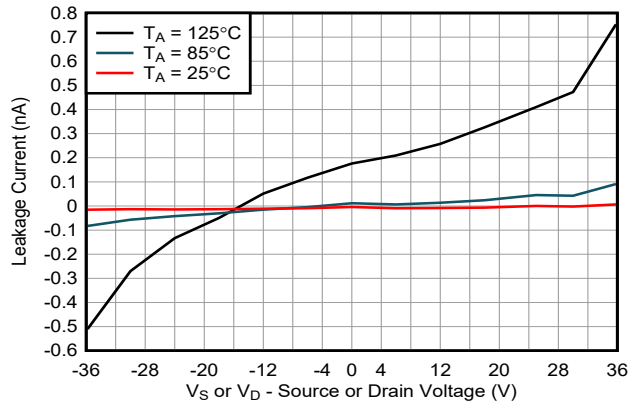

図 10-2. On-Leakage

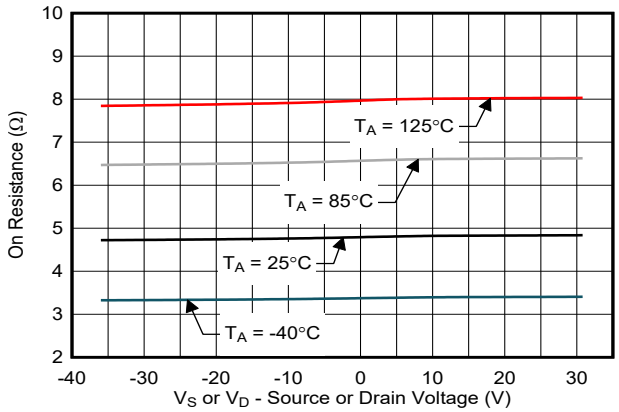

図 10-3. R_{ON} Flatness

11 Power Supply Recommendations

The TMUX821x devices operate across a wide supply range of ±10 V to ±50 V (10 V to 100 V in single-supply mode). They also perform well with asymmetrical supplies such as V_{DD} = 50 V and V_{SS}= –10 V. For improved supply noise immunity, use a supply decoupling capacitor ranging from 1 µF to 10 µF at both the V_{DD} and V_{SS} pins to ground. An additional 0.1 µF capacitor placed closest to the supply pins will provide the best supply decoupling solution. Always ensure the ground (GND) connection is established before supplies are ramped.

Copyright © 2023 Texas Instruments Incorporated

12 Layout

12.1 Layout Guidelines

The image below illustrates an example of a PCB layout with the TMUX821x device. Some key considerations are:

- For reliable operation, connect at least one decoupling capacitor ranging from 0.1 µF to 10 µF between V_{DD} and V_{SS} to GND. We recommend a 0.1 µF and 1 µF capacitor, placing the lowest value capacitor as close to the pin as possible. Make sure that the capacitor voltage rating is sufficient for the supply voltage.
- Keep the input lines as short as possible.
- Use a solid ground plane to help distribute heat and reduce electromagnetic interference (EMI) noise pickup.
- Do not run sensitive analog traces in parallel with digital traces. Avoid crossing digital and analog traces if possible, and only make perpendicular crossings when necessary.

12.2 Layout Example

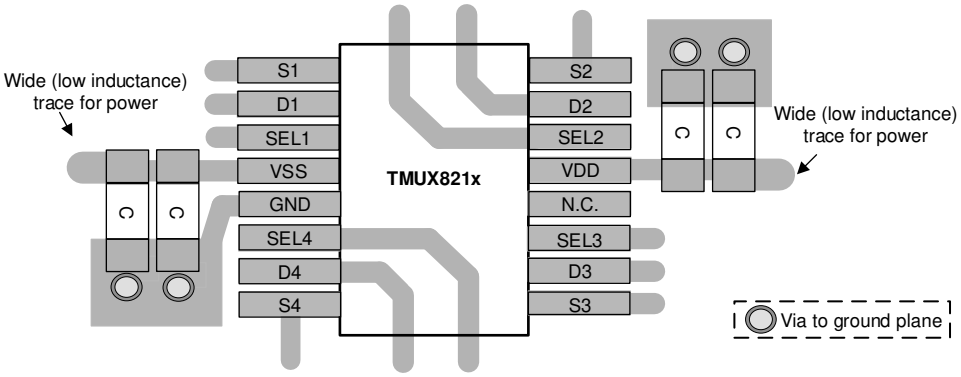

図 12-1. TMUX821x TSSOP Layout Example

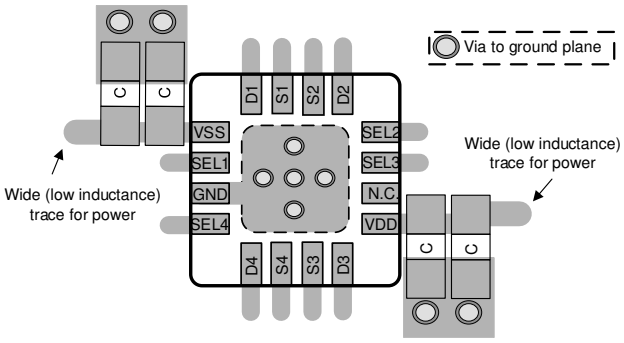

図 12-2. TMUX821x QFN Layout Example

13 Device and Documentation Support

13.1 Documentation Support

13.1.1 Related Documentation

For related documentation, see the following:

- Texas Instruments, *Implications of Slow or Floating CMOS Inputs* application note
- Texas Instruments, *Multiplexers and Signal Switches Glossary* application report
- Texas Instruments, *Using Latch-Up Immune Multiplexers to Help Improve System Reliability* application report

13.2 ドキュメントの更新通知を受け取る方法

ドキュメントの更新についての通知を受け取るには、ti.com のデバイス製品フォルダを開いてください。「更新の通知を受け取る」をクリックして登録すると、変更されたすべての製品情報に関するダイジェストを毎週受け取れます。変更の詳細については、修正されたドキュメントに含まれている改訂履歴をご覧ください。

13.3 サポート・リソース

TI E2E™ サポート・フォーラムは、エンジニアが検証済みの回答と設計に関するヒントをエキスパートから迅速かつ直接得ることができる場所です。既存の回答を検索したり、独自の質問をしたりすることで、設計で必要な支援を迅速に得ることができます。

リンクされているコンテンツは、該当する貢献者により、現状のまま提供されるものです。これらは TI の仕様を構成するものではなく、必ずしも TI の見解を反映したものではありません。TI の使用条件を参照してください。

13.4 Trademarks

TI E2E™ is a trademark of Texas Instruments.
すべての商標は、それぞれの所有者に帰属します。

13.5 静電気放電に関する注意事項

この IC は、ESD によって破損する可能性があります。テキサス・インスツルメンツは、IC を取り扱う際には常に適切な注意を払うことを推奨します。正しい取り扱いおよび設置手順に従わない場合、デバイスを破損するおそれがあります。

ESD による破損は、わずかな性能低下からデバイスの完全な故障まで多岐にわたります。精密な IC の場合、パラメータがわずかに変化するだけで公表されている仕様から外れる可能性があるため、破損が発生しやすくなっています。

13.6 用語集

テキサス・インスツルメンツ用語集　　この用語集には、用語や略語の一覧および定義が記載されています。

14 Mechanical, Packaging, and Orderable Information

The following pages include mechanical, packaging, and orderable information. This information is the most current data available for the designated devices. This data is subject to change without notice and revision of this document. For browser-based versions of this data sheet, refer to the left-hand navigation.

Copyright © 2023 Texas Instruments Incorporated

PACKAGING INFORMATION

Orderable part number	Status (1)	Material type (2)	Package | Pins	Package qty | Carrier	RoHS (3)	Lead finish/ Ball material (4)	MSL rating/ Peak reflow (5)	Op temp (°C)	Part marking (6)
TMUX8211PWR	Active	Production	TSSOP (PW) | 16	3000 | LARGE T&R	Yes	NIPDAU	Level-1-260C-UNLIM	-40 to 125	TM8211
TMUX8211PWR.B	Active	Production	TSSOP (PW) | 16	3000 | LARGE T&R	Yes	NIPDAU	Level-1-260C-UNLIM	-40 to 125	TM8211
TMUX8211RUMR	Active	Production	WQFN (RUM) | 16	3000 | LARGE T&R	Yes	NIPDAU	Level-2-260C-1 YEAR	-40 to 125	TMUX 8211
TMUX8211RUMR.B	Active	Production	WQFN (RUM) | 16	3000 | LARGE T&R	Yes	NIPDAU	Level-2-260C-1 YEAR	-40 to 125	TMUX 8211
TMUX8212PWR	Active	Production	TSSOP (PW) | 16	2000 | LARGE T&R	Yes	NIPDAU	Level-1-260C-UNLIM	-40 to 125	TM8212
TMUX8212PWR.B	Active	Production	TSSOP (PW) | 16	2000 | LARGE T&R	Yes	NIPDAU	Level-1-260C-UNLIM	-40 to 125	TM8212
TMUX8212PWRG4	Active	Production	TSSOP (PW) | 16	2000 | LARGE T&R	Yes	NIPDAU	Level-1-260C-UNLIM	-40 to 125	TM8212
TMUX8212PWRG4.B	Active	Production	TSSOP (PW) | 16	2000 | LARGE T&R	Yes	NIPDAU	Level-1-260C-UNLIM	-40 to 125	TM8212
TMUX8212RUMR	Active	Production	WQFN (RUM) | 16	3000 | LARGE T&R	Yes	NIPDAU	Level-2-260C-1 YEAR	-40 to 125	TMUX 8212
TMUX8212RUMR.B	Active	Production	WQFN (RUM) | 16	3000 | LARGE T&R	Yes	NIPDAU	Level-2-260C-1 YEAR	-40 to 125	TMUX 8212
TMUX8213PWR	Active	Production	TSSOP (PW) | 16	3000 | LARGE T&R	Yes	NIPDAU	Level-1-260C-UNLIM	-40 to 125	TM8213
TMUX8213PWR.B	Active	Production	TSSOP (PW) | 16	3000 | LARGE T&R	Yes	NIPDAU	Level-1-260C-UNLIM	-40 to 125	TM8213
TMUX8213RUMR	Active	Production	WQFN (RUM) | 16	3000 | LARGE T&R	Yes	NIPDAU	Level-2-260C-1 YEAR	-40 to 125	TMUX 8213
TMUX8213RUMR.B	Active	Production	WQFN (RUM) | 16	3000 | LARGE T&R	Yes	NIPDAU	Level-2-260C-1 YEAR	-40 to 125	TMUX 8213

(1) **Status:** For more details on status, see our product life cycle.

(2) **Material type:** When designated, preproduction parts are prototypes/experimental devices, and are not yet approved or released for full production. Testing and final process, including without limitation quality assurance, reliability performance testing, and/or process qualification, may not yet be complete, and this item is subject to further changes or possible discontinuation. If available for ordering, purchases will be subject to an additional waiver at checkout, and are intended for early internal evaluation purposes only. These items are sold without warranties of any kind.

(3) **RoHS values:** Yes, No, RoHS Exempt. See the TI RoHS Statement for additional information and value definition.

(4) **Lead finish/Ball material:** Parts may have multiple material finish options. Finish options are separated by a vertical ruled line. Lead finish/Ball material values may wrap to two lines if the finish value exceeds the maximum column width.

(5) **MSL rating/Peak reflow:** The moisture sensitivity level ratings and peak solder (reflow) temperatures. In the event that a part has multiple moisture sensitivity ratings, only the lowest level per JEDEC standards is shown. Refer to the shipping label for the actual reflow temperature that will be used to mount the part to the printed circuit board.

(6) **Part marking:** There may be an additional marking, which relates to the logo, the lot trace code information, or the environmental category of the part.

Multiple part markings will be inside parentheses. Only one part marking contained in parentheses and separated by a "~" will appear on a part. If a line is indented then it is a continuation of the previous line and the two combined represent the entire part marking for that device.

Important Information and Disclaimer: The information provided on this page represents TI's knowledge and belief as of the date that it is provided. TI bases its knowledge and belief on information provided by third parties, and makes no representation or warranty as to the accuracy of such information. Efforts are underway to better integrate information from third parties. TI has taken and continues to take reasonable steps to provide representative and accurate information but may not have conducted destructive testing or chemical analysis on incoming materials and chemicals. TI and TI suppliers consider certain information to be proprietary, and thus CAS numbers and other limited information may not be available for release.

In no event shall TI's liability arising out of such information exceed the total purchase price of the TI part(s) at issue in this document sold by TI to Customer on an annual basis.

TAPE AND REEL INFORMATION

REEL DIMENSIONS

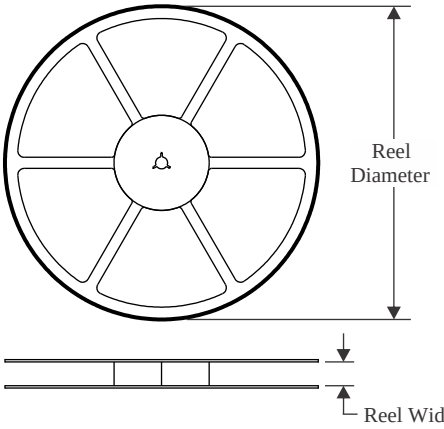

TAPE DIMENSIONS

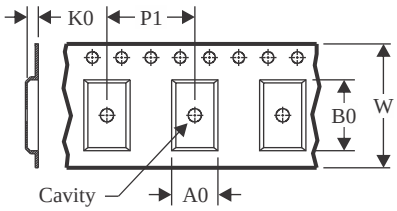

A0	Dimension designed to accommodate the component width
B0	Dimension designed to accommodate the component length
K0	Dimension designed to accommodate the component thickness
W	Overall width of the carrier tape
P1	Pitch between successive cavity centers

QUADRANT ASSIGNMENTS FOR PIN 1 ORIENTATION IN TAPE

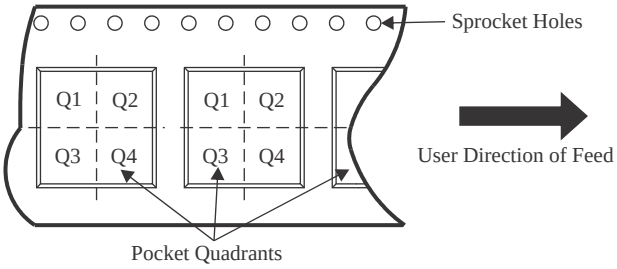

*All dimensions are nominal

Device	Package Type	Package Drawing	Pins	SPQ	Reel Diameter (mm)	Reel Width W1 (mm)	A0 (mm)	B0 (mm)	K0 (mm)	P1 (mm)	W (mm)	Pin1 Quadrant
TMUX8211PWR	TSSOP	PW	16	3000	330.0	12.4	6.9	5.6	1.6	8.0	12.0	Q1
TMUX8211RUMR	WQFN	RUM	16	3000	330.0	12.4	4.25	4.25	1.15	8.0	12.0	Q2
TMUX8212PWR	TSSOP	PW	16	2000	330.0	12.4	6.9	5.6	1.6	8.0	12.0	Q1
TMUX8212PWRG4	TSSOP	PW	16	2000	330.0	12.4	6.9	5.6	1.6	8.0	12.0	Q1
TMUX8212RUMR	WQFN	RUM	16	3000	330.0	12.4	4.25	4.25	1.15	8.0	12.0	Q2
TMUX8213PWR	TSSOP	PW	16	3000	330.0	12.4	6.9	5.6	1.6	8.0	12.0	Q1
TMUX8213RUMR	WQFN	RUM	16	3000	330.0	12.4	4.25	4.25	1.15	8.0	12.0	Q2

TAPE AND REEL BOX DIMENSIONS

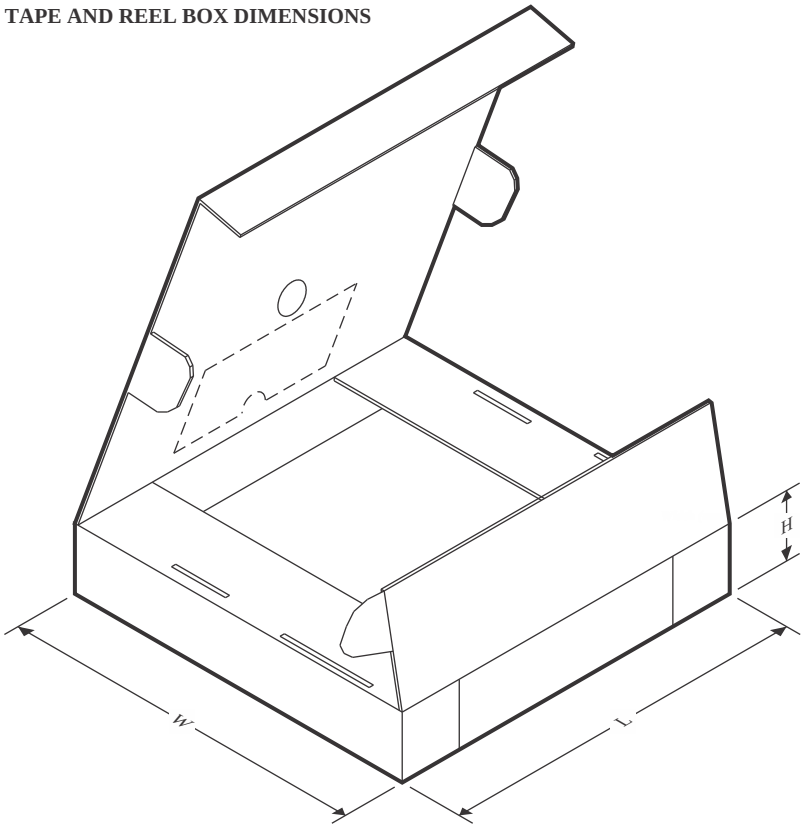

*All dimensions are nominal

Device	Package Type	Package Drawing	Pins	SPQ	Length (mm)	Width (mm)	Height (mm)
TMUX8211PWR	TSSOP	PW	16	3000	353.0	353.0	32.0
TMUX8211RUMR	WQFN	RUM	16	3000	360.0	360.0	36.0
TMUX8212PWR	TSSOP	PW	16	2000	353.0	353.0	32.0
TMUX8212PWRG4	TSSOP	PW	16	2000	353.0	353.0	32.0
TMUX8212RUMR	WQFN	RUM	16	3000	360.0	360.0	36.0
TMUX8213PWR	TSSOP	PW	16	3000	353.0	353.0	32.0
TMUX8213RUMR	WQFN	RUM	16	3000	360.0	360.0	36.0

GENERIC PACKAGE VIEW

RUM 16

WQFN - 0.8 mm max height

4 x 4, 0.65 mm pitch

PLASTIC QUAD FLATPACK - NO LEAD

This image is a representation of the package family, actual package may vary.
Refer to the product data sheet for package details.

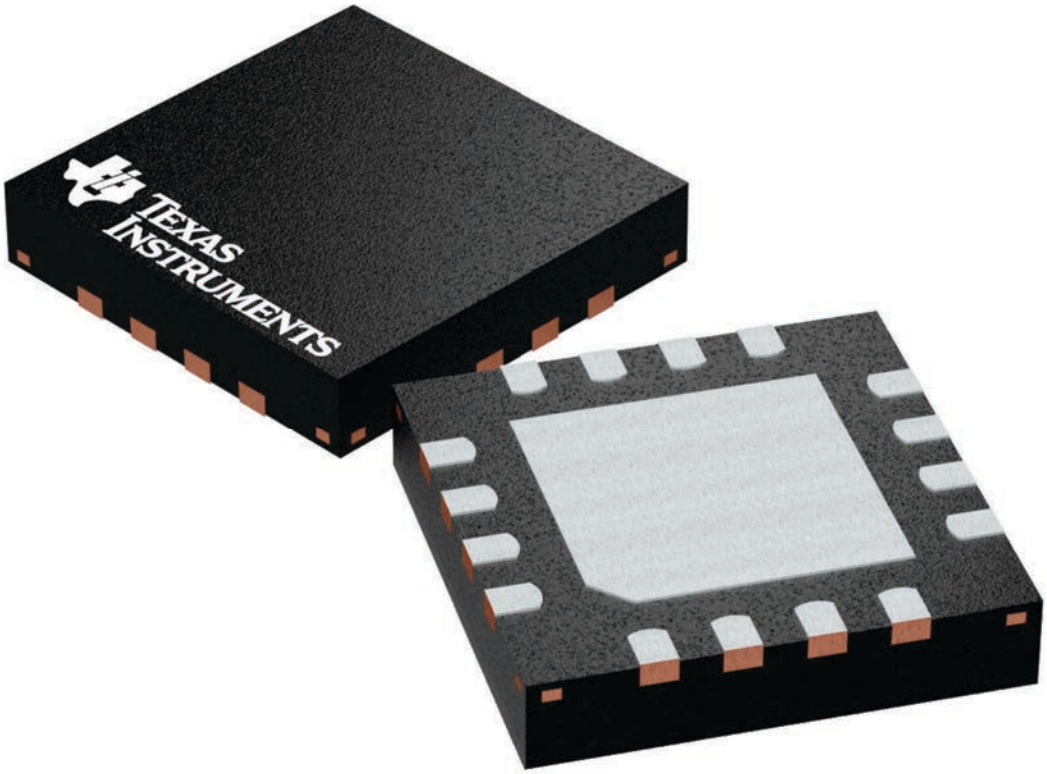

4224843/A

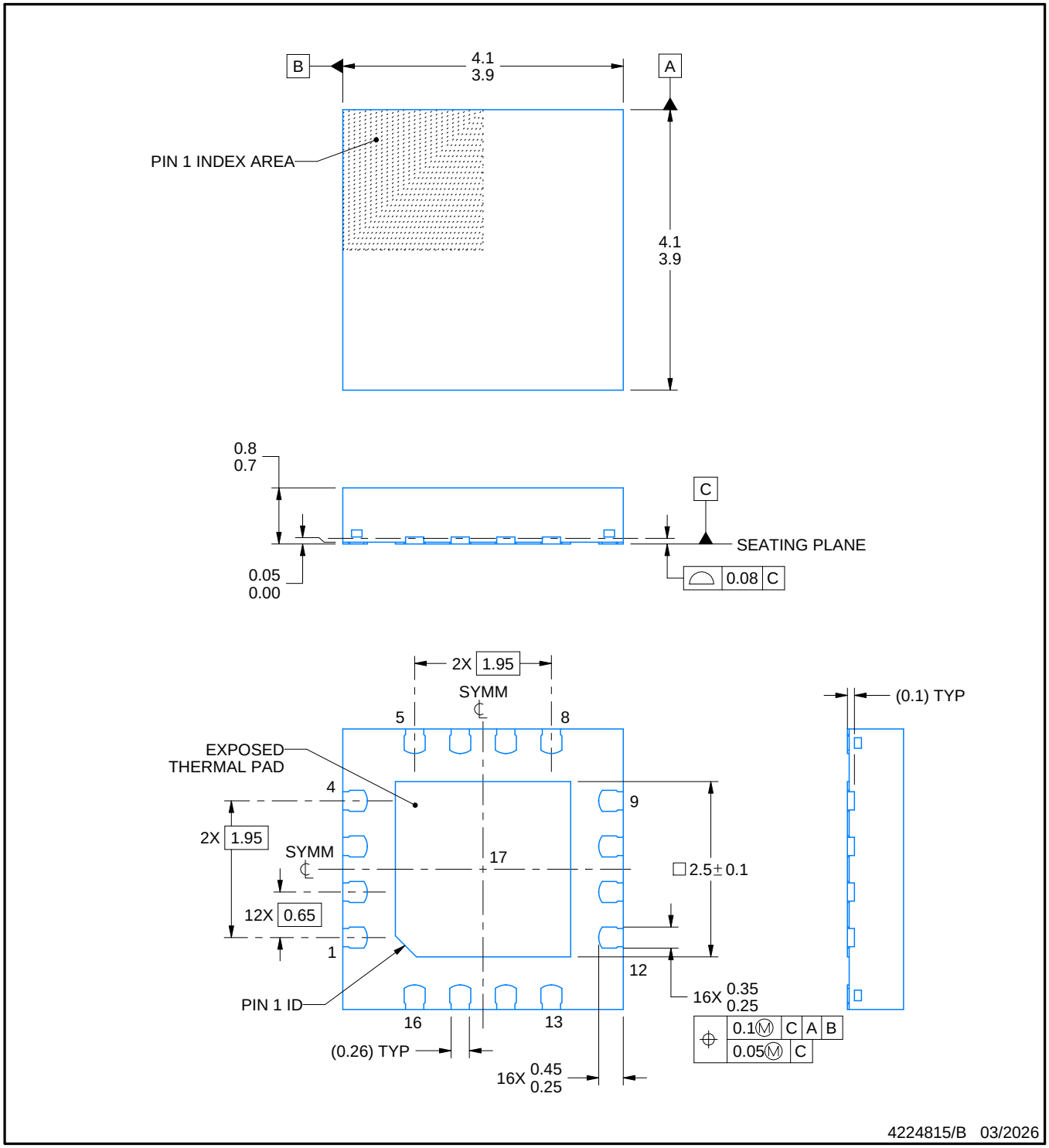

NOTES:

1. All linear dimensions are in millimeters. Any dimensions in parenthesis are for reference only. Dimensioning and tolerancing per ASME Y14.5M.
2. This drawing is subject to change without notice.
3. The package thermal pad must be soldered to the printed circuit board for thermal and mechanical performance.

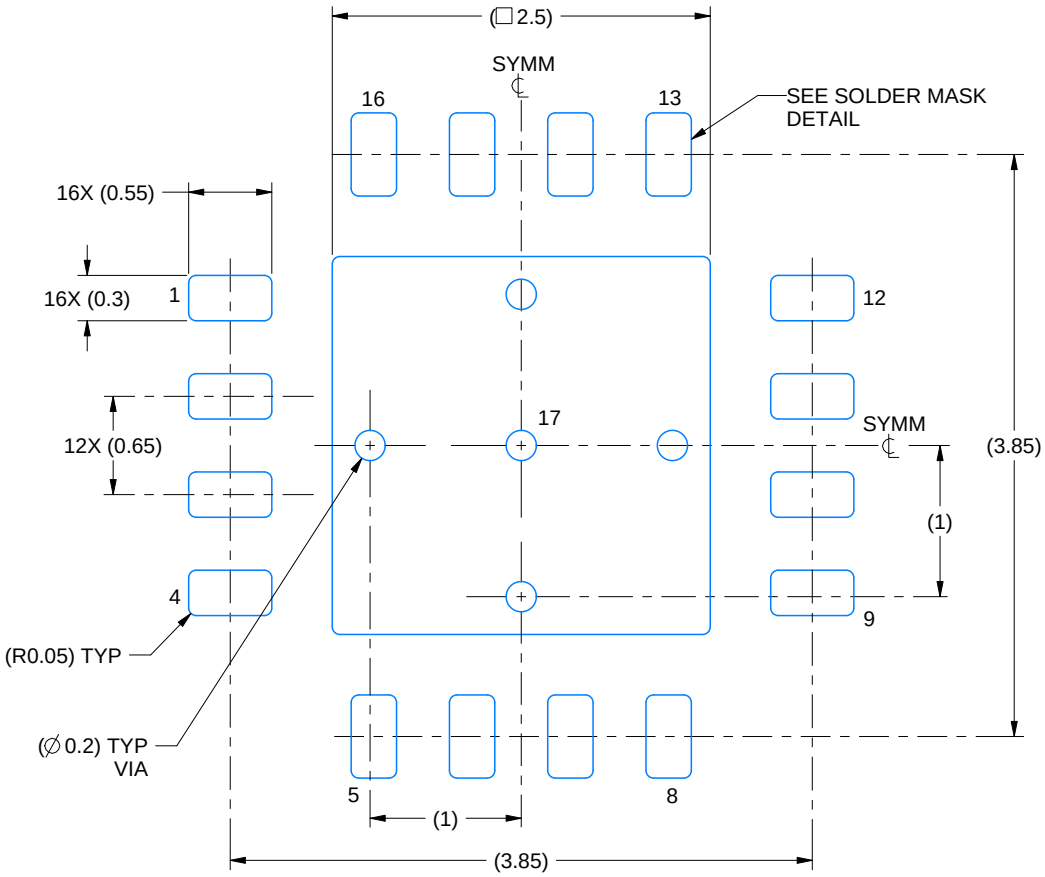

LAND PATTERN EXAMPLE
EXPOSED METAL SHOWN
SCALE: 20X

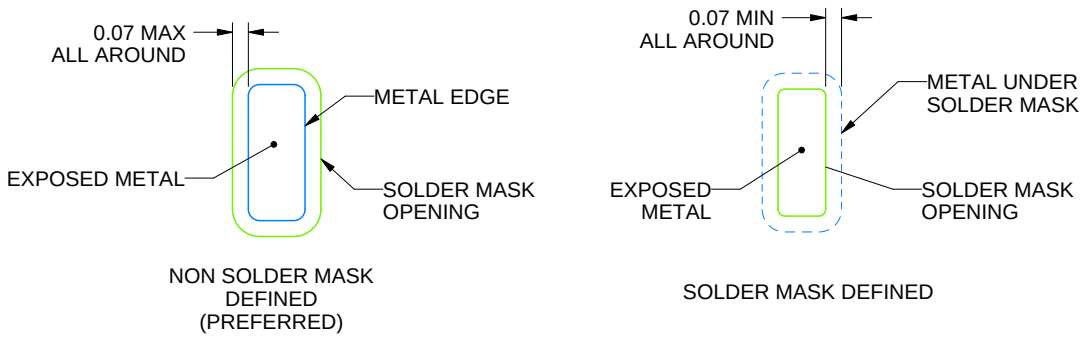

SOLDER MASK DETAILS

4224815/B 03/2026

NOTES: (continued)

4. This package is designed to be soldered to a thermal pad on the board. For more information, see Texas Instruments literature number SLUA271 (www.ti.com/lit/slua271).
5. Vias are optional depending on application, refer to device data sheet. If any vias are implemented, refer to their locations shown on this view. It is recommended that vias under paste be filled, plugged or tented.

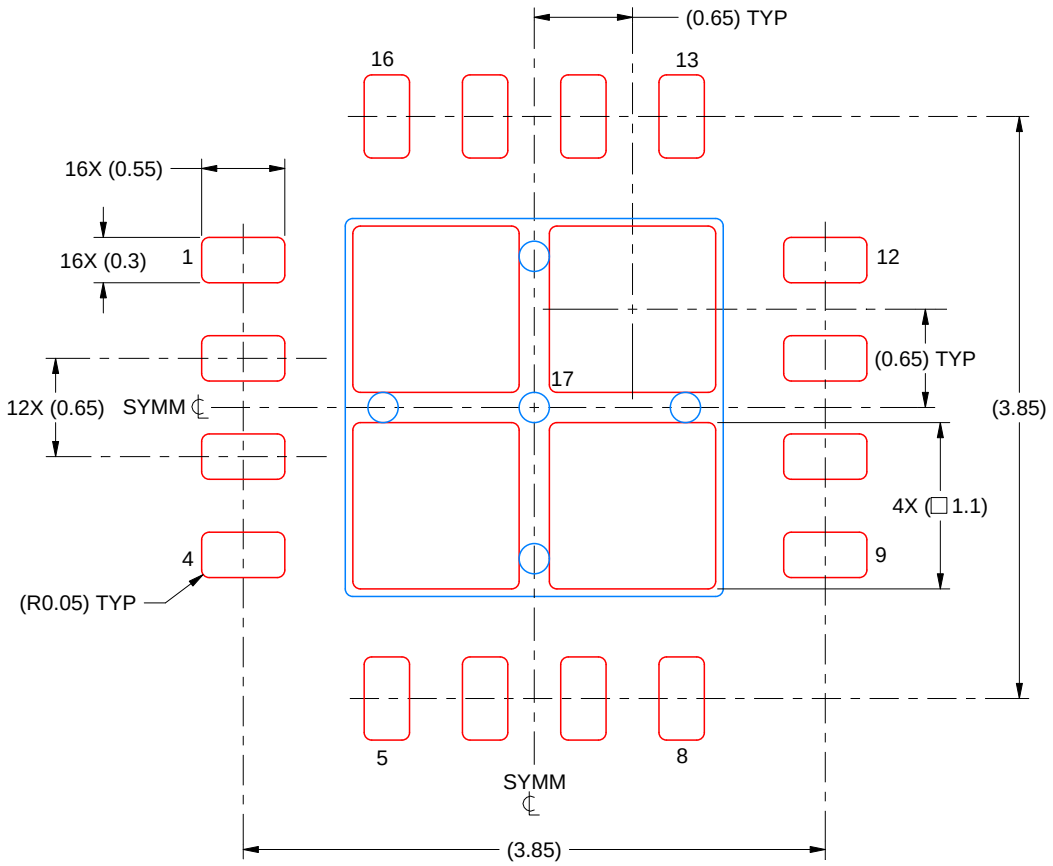

SOLDER PASTE EXAMPLE
BASED ON 0.125 MM THICK STENCIL
SCALE: 20X

EXPOSED PAD 17
77% PRINTED SOLDER COVERAGE BY AREA UNDER PACKAGE

4224815/B 03/2026

NOTES: (continued)

6. Laser cutting apertures with trapezoidal walls and rounded corners may offer better paste release. IPC-7525 may have alternate design recommendations.

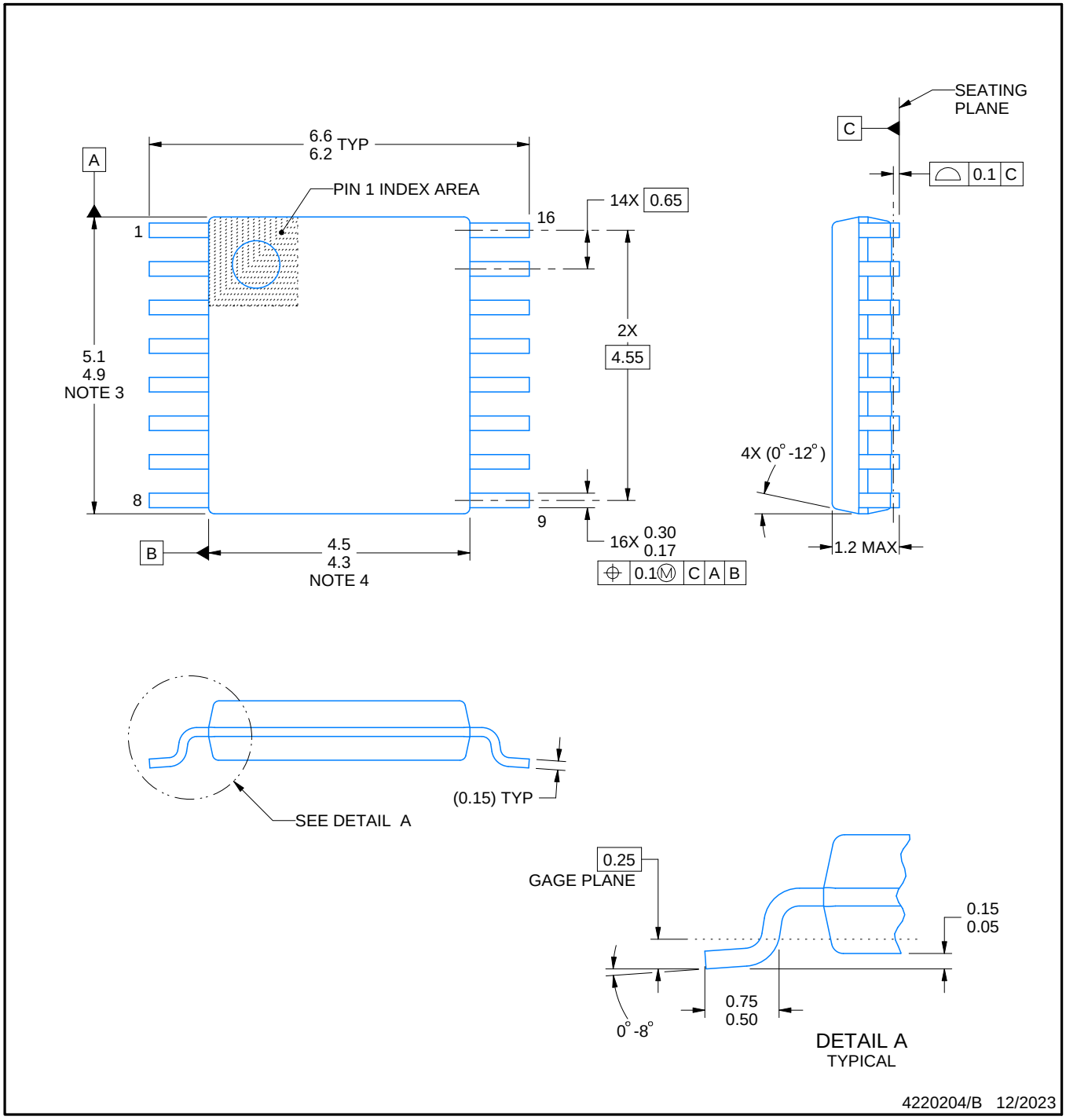

NOTES:

1. All linear dimensions are in millimeters. Any dimensions in parenthesis are for reference only. Dimensioning and tolerancing per ASME Y14.5M.
2. This drawing is subject to change without notice.
3. This dimension does not include mold flash, protrusions, or gate burrs. Mold flash, protrusions, or gate burrs shall not exceed 0.15 mm per side.
4. This dimension does not include interlead flash. Interlead flash shall not exceed 0.25 mm per side.
5. Reference JEDEC registration MO-153.

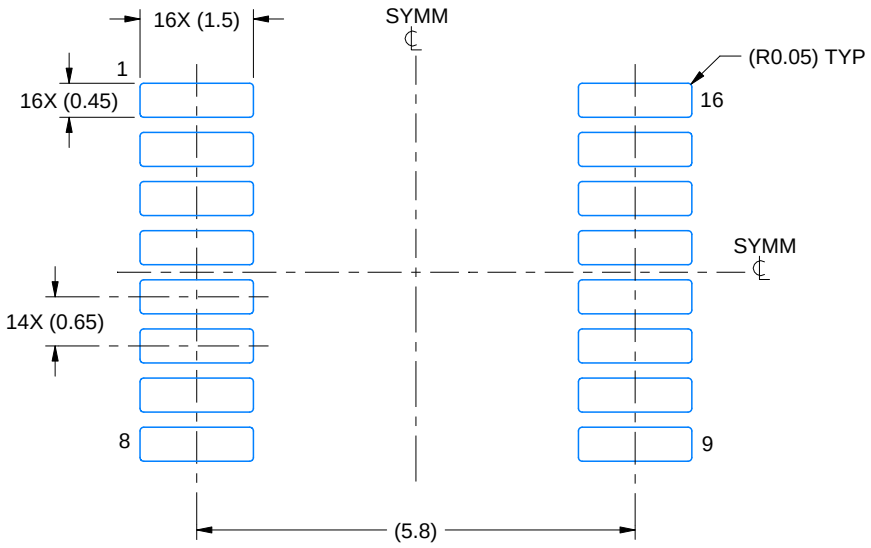

LAND PATTERN EXAMPLE
EXPOSED METAL SHOWN
SCALE: 10X

NON-SOLDER MASK DEFINED (PREFERRED)

SOLDER MASK DEFINED

SOLDER MASK DETAILS

4220204/B 12/2023

NOTES: (continued)

6. Publication IPC-7351 may have alternate designs.
7. Solder mask tolerances between and around signal pads can vary based on board fabrication site.

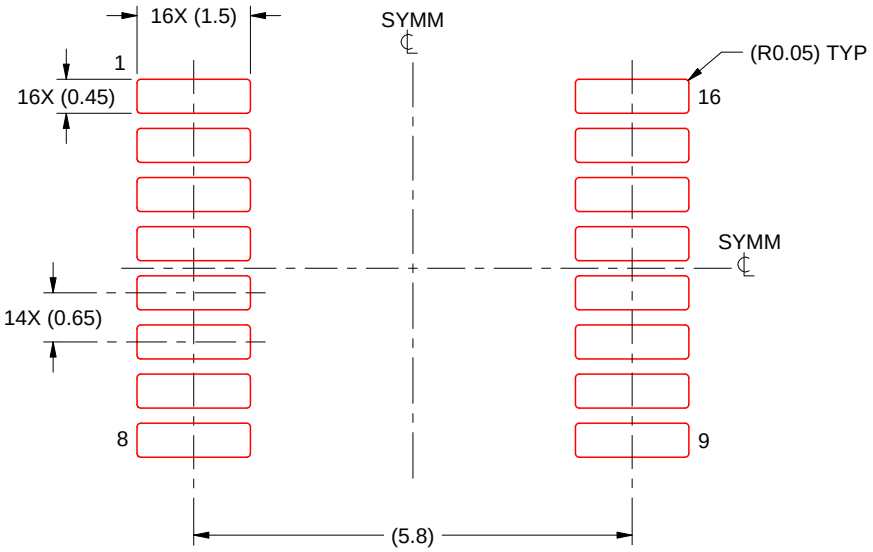

SOLDER PASTE EXAMPLE
BASED ON 0.125 mm THICK STENCIL
SCALE: 10X

4220204/B 12/2023

NOTES: (continued)

8. Laser cutting apertures with trapezoidal walls and rounded corners may offer better paste release. IPC-7525 may have alternate design recommendations.
9. Board assembly site may have different recommendations for stencil design.

重要なお知らせと免責事項

TI は、技術データと信頼性データ (データシートを含みます)、設計リソース (リファレンス デザインを含みます)、アプリケーションや設計に関する各種アドバイス、Web ツール、安全性情報、その他のリソースを、欠陥が存在する可能性のある「現状のまま」提供しており、商品性および特定目的に対する適合性の黙示保証、第三者の知的財産権の非侵害保証を含むいかなる保証も、明示的または黙示的にかかわらず拒否します。

これらのリソースは、TI 製品を使用する設計の経験を積んだ開発者への提供を意図したものです。(1) お客様のアプリケーションに適した TI 製品の選定、(2) お客様のアプリケーションの設計、検証、試験、(3) お客様のアプリケーションに該当する各種規格や、その他のあらゆる安全性、セキュリティ、規制、または他の要件への確実な適合に関する責任を、お客様のみが単独で負うものとします。

上記の各種リソースは、予告なく変更される可能性があります。これらのリソースは、リソースで説明されている TI 製品を使用するアプリケーションの開発の目的でのみ、TI はその使用をお客様に許諾します。これらのリソースに関して、他の目的で複製することや掲載することは禁止されています。TI や第三者の知的財産権のライセンスが付与されている訳ではありません。お客様は、これらのリソースを自身で使用した結果発生するあらゆる申し立て、損害、費用、損失、責任について、TI およびその代理人を完全に補償するものとし、TI は一切の責任を拒否します。

TI の製品は、 TI の販売条件 、 TI の総合的な品質ガイドライン 、 ti.com または TI 製品などに関連して提供される他の適用条件に従い提供されます。TI がこれらのリソースを提供することは、適用される TI の保証または他の保証の放棄の拡大や変更を意味するものではありません。 TI がカスタム、またはカスタマー仕様として明示的に指定していない限り、TI の製品は標準的なカタログに掲載される汎用機器です。

お客様がいかなる追加条項または代替条項を提案する場合も、TI はそれらに異議を唱え、拒否します。

Copyright © 2026, Texas Instruments Incorporated

最終更新日：2025 年 10 月