TPS2547 USB充電ポート・コントローラおよび3Aパワー・スイッチ、負荷検出機能付き

1 特長

- USB BC 1.2に準拠したD+/D– CDP/DCPモード
- 中国テレコミュニケーション業界規格YD/T 1591-2009準拠のD+/D–短絡モード
- Non-BC1.2充電モードを自動選択によりサポート
  - D+/D–分圧モード: 2V/2.7Vおよび2.7V/2V
  - D+/D– 1.2Vモード
- スリープ・モード充電およびマウス/キーボードによるウェイクアップをサポート
- S4/S5充電での負荷検出による電源制御と、すべての充電モードでのポート電力管理
- USB 2.0および3.0互換
- 73mΩ (標準値)のハイサイドMOSFETを内蔵
- 3Aのプログラム可能なI_{LIMIT}で、15Wの負荷に対応
- 動作範囲: 4.5V～5.5V
- ディセーブル/イネーブル時のI_Q: 2µA/270µA
- TPS2543/46とドロップインおよびBOM互換
- 16ピンWQFN (3.00mm × 3.00mm)パッケージ
- DM/DPピンで8kVのESD定格
- ファイル番号E169910でUL認定済み、 CB認定 - 審査中

2 アプリケーション

- USBポート(ホストおよびハブ)
- ノートPCおよびデスクトップPC
- ユニバーサルACアダプタ

3 概要

TPS2547はUSB充電ポート・コントローラおよびパワー・スイッチで、USB 2.0高速データ・ライン(D+/D–)スイッチを内蔵しています。TPS2547は、D+/D–ライン上の電気シグネチャにより、*機能説明*セクションに記載されている充電スキーマをサポートします。TIは、主要な携帯電話、タブレット、メディア・デバイスの充電をTPS2547でテストし、BC1.2準拠および非準拠の両方のデバイスで互換性を確認しています。

主要なデバイスの充電に加えて、TPS2547は$\overline{\text{STATUS}}$ピンによって、パワー・ウェイク機能とポート電力管理(PPM)機能という2つの異なる電力管理機能もサポートしています。パワー・ウェイクによりS4/S5充電中の電源制御が可能になり、PPMによりマルチ・ポート・システムでのインテリジェントなポート電力管理が可能になります。さらに、TPS2547ではマウス/キーボードによる(S3からの)システム・ウェイクアップ(低速およびフルスピード)も完全にサポートされています。

TPS2547 73mΩ電力分配スイッチは、大きな容量性負荷や短絡の発生する可能性が高いアプリケーションを対象としています。2つのプログラム可能な電流スレッショルドにより、電流制限と負荷検出スレッショルドを柔軟に設定できます。

製品情報(1)

型番	パッケージ	本体サイズ(公称)
TPS2547	WQFN (16)	3.00mm×3.00mm

(1) 提供されているすべてのパッケージについては、データシートの末尾にある注文情報を参照してください。

概略回路図

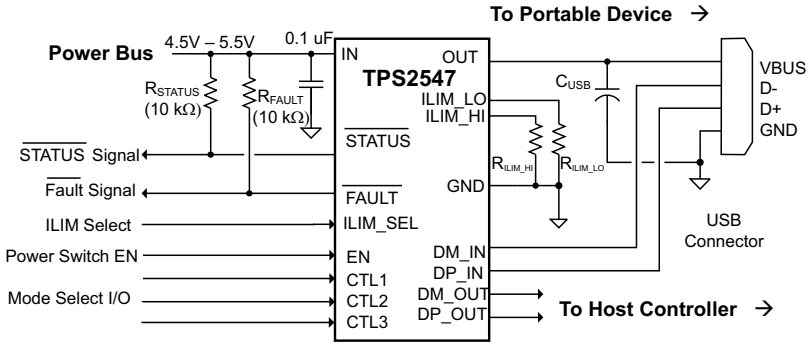

Copyright © 2017, Texas Instruments Incorporated

英語版のTI製品についての情報を翻訳したこの資料は、製品の概要を確認する目的で便宜的に提供しているものです。該当する正式な英語版の最新情報は、www.ti.comで閲覧でき、その内容が常に優先されます。TIでは翻訳の正確性および妥当性につきましては一切保証いたしません。実際の設計などの前には、必ず最新版の英語版をご参照くださいますようお願いいたします。

目次

1 特長 ... 1
2 アプリケーション ... 1
3 概要 ... 1
4 改訂履歴 ... 2
5 **Pin Configuration and Functions** ... 3
6 **Specifications** ... 4
6.1 Absolute Maximum Ratings ... 4
6.2 ESD Ratings ... 4
6.3 Recommended Operating Conditions ... 4
6.4 Thermal Information ... 5
6.5 Electrical Characteristics ... 5
6.6 Electrical Characteristics: High-Bandwidth Switch ... 6
6.7 Electrical Characteristics: Charging Controller ... 7
6.8 Typical Characteristics ... 9
7 **Parameter Measurement Information** ... 13
8 **Detailed Description** ... 14
8.1 Overview ... 14
8.2 Functional Block Diagram ... 15
8.3 Feature Description ... 15
8.4 Device Functional Modes ... 26
9 **Application and Implementation** ... 29
9.1 Application Information ... 29
9.2 Typical Application ... 30
10 **Power Supply Recommendations** ... 32
11 **Layout** ... 32
11.1 Layout Guidelines ... 32
11.2 Layout Example ... 33
12 デバイスおよびドキュメントのサポート ... 34
12.1 ドキュメントのサポート ... 34
12.2 ドキュメントの更新通知を受け取る方法 ... 34
12.3 コミュニティ・リソース ... 34
12.4 商標 ... 34
12.5 静電気放電に関する注意事項 ... 34
12.6 Glossary ... 34
13 メカニカル、パッケージ、および注文情報 ... 34

4 改訂履歴

資料番号末尾の英字は改訂を表しています。その改訂履歴は英語版に準じています。

2017年5月発行のものから更新	**Page**
• Changed Equation 1	30
• Changed Equation 2	31
• Changed Equation 3	31

Copyright © 2017, Texas Instruments Incorporated

5 Pin Configuration and Functions

RTE Package
16-Pin WQFN
Top View

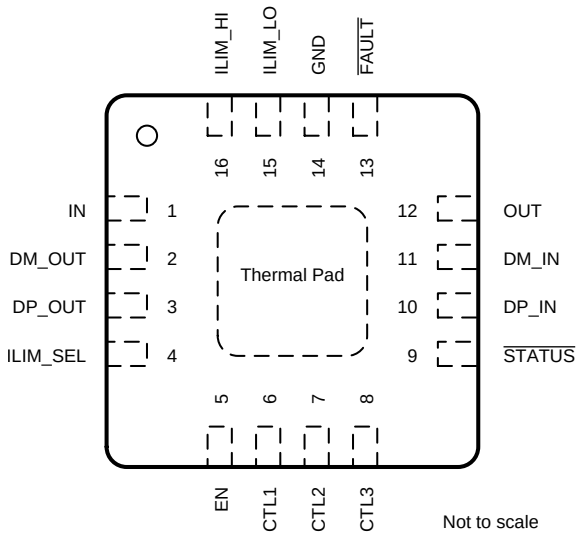

Pin Functions

PIN		TYPE (1)	DESCRIPTION
NO.	NAME		
1	IN	P	Input voltage and supply voltage; connect 0.1 µF or greater ceramic capacitor from IN to GND as close to the device as possible.
2	DM_OUT	I/O	D– data line to USB host controller.
3	DP_OUT	I/O	D+ data line to USB host controller.
4	ILIM_SEL	I	Logic-level input signal used to control the charging mode, current limit threshold, and load detection; see Table 3. Can be tied directly to IN or GND without pullup or pulldown resistor.
5	EN	I	Logic-level input for turning the power switch and the signal switches on/off; logic low turns off the signal and power switches and holds OUT in discharge. Can be tied directly to IN or GND without pullup or pulldown resistor.
6	CTL1	I	Logic-level input used to control the charging mode and the signal switches; see Table 3. Can be tied directly to IN or GND without pullup or pulldown resistor.
7	CTL2	I	Logic-level input used to control the charging mode and the signal switches; see Table 3. Can be tied directly to IN or GND without pullup or pulldown resistor.
8	CTL3	I	Logic-level input used to control the charging mode and the signal switches; see Table 3. Can be tied directly to IN or GND without pullup or pulldown resistor.
9	$\overline{\text{STATUS}}$	O	Active-low open-drain output, asserted in load detection conditions.
10	DP_IN	I/O	D+ data line to downstream connector.
11	DM_IN	I/O	D– data line to downstream connector.
12	OUT	P	Power-switch output.
13	$\overline{\text{FAULT}}$	O	Active-low open-drain output, asserted during overtemperature or current limit conditions.
14	GND	P	Ground connection.
15	ILIM_LO	I	External resistor connection used to set the low current-limit threshold and the load detection current threshold. A resistor to ILIM_LO is optional; see *Current-Limit Settings* in *Detailed Description*.
16	ILIM_HI	I	External resistor connection used to set the high-current-limit threshold.
—	Thermal Pad	—	Internally connected to GND; used to heatsink the part to the circuit board traces. Connect to GND plane.

(1) G = ground, I = input, O = output, P = power.

Copyright © 2017, Texas Instruments Incorporated

6 Specifications

6.1 Absolute Maximum Ratings

Over operating free-air temperature range (unless otherwise noted)[1]

		MIN	MAX	UNIT
Voltage	IN, EN, ILIM_LO, ILIM_HI, $\overline{\text{FAULT}}$, $\overline{\text{STATUS}}$, ILIM_SEL, CTL1, CTL2, CTL3, OUT	–0.3	7	V
	IN to OUT	–7	7	
	DP_IN, DM_IN, DP_OUT, DM_OUT	–0.3	(IN + 0.3) or 5.7	
Input clamp current	DP_IN, DM_IN, DP_OUT, DM_OUT		±20	mA
Continuous current in SDP or CDP mode	DP_IN to DP_OUT or DM_IN to DM_OUT		±100	mA
Continuous current in BC1.2 DCP mode	DP_IN to DM_IN		±50	mA
Continuous output current	OUT	Internally limited		
Continuous output sink current	$\overline{\text{FAULT}}$, $\overline{\text{STATUS}}$		25	mA
Continuous output source current	ILIM_LO, ILIM_HI	Internally limited		mA
Operating junction temperature, T_J		–40	Internally limited	°C

(1) Stresses beyond those listed under *Absolute Maximum Ratings* may cause permanent damage to the device. These are stress ratings only, which do not imply functional operation of the device at these or any other conditions beyond those indicated under *Recommended Operating Conditions*. Exposure to absolute-maximum-rated conditions for extended periods may affect device reliability.

6.2 ESD Ratings

			VALUE	UNIT
$V_{(ESD)}$ Electrostatic discharge	Human-body model (HBM), per ANSI/ESDA/JEDEC JS-001[1]	HBM	±2000	V
		HBM wrt GND and each other, DP_IN, DM_IN, OUT	±8000	
	Charged-device model (CDM), per JEDEC specification JESD22-C101[2]		±500	

(1) JEDEC document JEP155 states that 500-V HBM allows safe manufacturing with a standard ESD control process.
(2) JEDEC document JEP157 states that 250-V CDM allows safe manufacturing with a standard ESD control process.

6.3 Recommended Operating Conditions

voltages are referenced to GND (unless otherwise noted)

			MIN	MAX	UNIT
V_{IN}	Input voltage, IN		4.5	5.5	V
	Input voltage, logic-level inputs, EN, CTL1, CTL2, CTL3, ILIM_SEL		0	5.5	V
	Input voltage, data line inputs, DP_IN, DM_IN, DP_OUT, DM_OUT		0	V_{IN}	V
V_{IH}	High-level input voltage, EN, CTL1, CTL2, CTL3, ILIM_SEL		1.8		V
V_{IL}	Low-level input voltage, EN, CTL1, CTL2, CTL3, ILIM_SEL			0.8	V
	Continuous current, data line inputs, SDP or CDP mode, DP_IN to DP_OUT, DM_IN to DM_OUT			±30	mA
	Continuous current, data line inputs, BC1.2 DCP mode, DP_IN to DM_IN			±15	mA
I_{OUT}	Continuous output current, OUT	T_J = –40°C to 125°C	0	2.5	A
		T_J = –40°C to 115°C	0	3.0	
	Continuous output sink current, $\overline{\text{FAULT}}$, $\overline{\text{STATUS}}$		0	10	mA
R_{ILIM_XX}	Current-limit set resistors		15.4	750	kΩ
T_J	Operating virtual junction temperature		–40	125	°C

Copyright © 2017, Texas Instruments Incorporated

6.4 Thermal Information

THERMAL METRIC[1]		TPS2547 RTE (WQFN) 16 PINS	UNIT
$R_{\theta JA}$	Junction-to-ambient thermal resistance	53.4	°C/W
$R_{\theta JC(top)}$	Junction-to-case (top) thermal resistance	51.4	°C/W
$R_{\theta JB}$	Junction-to-board thermal resistance	17.2	°C/W
ψ_{JT}	Junction-to-top characterization parameter	3.7	°C/W
ψ_{JB}	Junction-to-board characterization parameter	20.7	°C/W
$R_{\theta JC(bot)}$	Junction-to-case (bottom) thermal resistance	3.9	°C/W

(1) For more information about traditional and new thermal metrics, see the *Semiconductor and IC Package Thermal Metrics* application report.

6.5 Electrical Characteristics

Unless otherwise noted: –40 ≤ T_J ≤ 125°C, 4.5 V ≤ V_{IN} ≤ 5.5 V, V_{EN} = V_{IN}, V_{ILIM_SEL} = V_{IN}, V_{CTL1} = V_{CTL2} = V_{CTL3} = V_{IN}. $R_{\overline{FAULT}}$ = $R_{\overline{STATUS}}$ = 10 kΩ, R_{ILIM_HI} = 20 kΩ, R_{ILIM_LO} = 80.6 kΩ. Positive currents are into pins. Typical values are at 25°C. All voltages are with respect to GND.

PARAMETER		TEST CONDITIONS	MIN	TYP	MAX	UNIT
POWER SWITCH						
$R_{DS(on)}$	ON resistance[1]	T_J = 25°C, I_{OUT} = 2 A		73	84	mΩ
		–40°C ≤ T_J ≤ 85°C, I_{OUT} = 2 A		73	105	
		–40°C ≤ T_J ≤ 125°C, I_{OUT} = 2 A		73	120	
t_r	OUT voltage rise time	V_{IN} = 5 V, C_L = 1 µF, R_L = 100 Ω (see Figure 23 and Figure 24)	0.7	1	1.6	ms
t_f	OUT voltage fall time		0.2	0.35	0.5	
t_{on}	OUT voltage turnon time	V_{IN} = 5 V, C_L = 1 µF, R_L = 100 Ω (see Figure 23 and Figure 25)		2.7	4	ms
t_{off}	OUT voltage turnoff time			1.7	3	
I_{REV}	Reverse leakage current	V_{OUT} = 5.5 V, V_{IN} = V_{EN} = 0 V, –40 ≤ T_J ≤ 85°C, Measure I_{OUT}			2	µA
DISCHARGE						
R_{DCHG}	OUT discharge resistance		400	500	630	Ω
t_{DCHG_L}	Long OUT discharge hold time	Time V_{OUT} < 0.7 V (see Figure 26)	1.3	2	2.9	s
t_{DCHG_S}	Short OUT discharge hold time	Time V_{OUT} < 0.7 V (see Figure 26)	205	310	450	ms
EN, ILIMSEL, CTL1, CTL2, CTL3 INPUTS						
	Input pin rising logic threshold voltage		1	1.35	1.7	V
	Input pin falling logic threshold voltage		0.85	1.15	1.45	
	Hysteresis[2]			200		mV
	Input current	Pin voltage = 0 V or 5.5 V	–0.5		0.5	µA
ILIMSEL CURRENT LIMIT						
I_{OS}	OUT short-circuit current limit[1]	V_{ILIM_SEL} = 0 V, R_{ILIM_LO} = 210 kΩ	213	250	287	mA
		V_{ILIM_SEL} = 0 V, R_{ILIM_LO} = 80.6 kΩ	598	650	708	
		V_{ILIM_SEL} = 0 V, R_{ILIM_LO} = 22.1 kΩ	2200	2365	2530	
		V_{ILIM_SEL} = V_{IN}, R_{ILIM_HI}= 20 kΩ	2425	2610	2800	
		V_{ILIM_SEL} = V_{IN}, R_{ILIM_HI} = 16.9 kΩ	2875	3085	3300	
		V_{ILIM_SEL} = V_{IN}, R_{ILIM_HI} = 15.4 kΩ, T_J = –40°C to 115°C	3150	3375	3600	
t_{IOS}	Response time to OUT short-circuit[2]	V_{IN} = 5 V, R = 0.1Ω, lead length = 2 inches (see Figure 27)		1.5		µs

(1) Pulse-testing techniques maintain junction temperature close to ambient temperature; Thermal effects must be taken into account separately.
(2) These parameters are provided for reference only and do not constitute part of TI's published device specifications for purposes of TI's product warranty.

Copyright © 2017, Texas Instruments Incorporated

Electrical Characteristics (continued)

Unless otherwise noted: –40 ≤ T_J ≤ 125°C, 4.5 V ≤ V_{IN} ≤ 5.5 V, V_{EN} = V_{IN}, V_{ILIM_SEL} = V_{IN}, V_{CTL1} = V_{CTL2} = V_{CTL3} = V_{IN}. $R_{\overline{FAULT}}$ = $R_{\overline{STATUS}}$ = 10 kΩ, R_{ILIM_HI} = 20 kΩ, R_{ILIM_LO} = 80.6 kΩ. Positive currents are into pins. Typical values are at 25°C. All voltages are with respect to GND.

PARAMETER		TEST CONDITIONS	MIN	TYP	MAX	UNIT
SUPPLY CURRENT						
I_{IN_OFF}	Disabled IN supply current	V_{EN} = 0 V, V_{OUT} = 0 V, –40 ≤ T_J ≤ 85°C		0.1	2	µA
I_{IN_ON}	Enabled IN supply current	V_{CTL1} = V_{CTL2} = V_{IN}, V_{CTL3} = 0 V, V_{ILIM_SEL} = 0 V		165	220	µA
		V_{CTL1} = V_{CTL2} = V_{CTL3} = V_{IN}, V_{ILIM_SEL} = 0 V		175	230	
		V_{CTL1} = V_{CTL2} = V_{IN}, V_{CTL3} = 0 V, V_{ILIM_SEL} = V_{IN}		185	240	
		V_{CTL1} = V_{CTL2} = V_{IN}, V_{CTL3} = VIN, V_{ILIM_SEL} = V_{IN}		195	250	
		V_{CTL1} = 0 V, V_{CTL2} = V_{CTL3} = V_{IN}		215	270	
UNDERVOLTAGE LOCKOUT						
V_{UVLO}	IN rising UVLO threshold voltage		3.9	4.1	4.3	V
	Hysteresis(2)			100		mV
$\overline{FAULT}$						
	Output low voltage	$I_{\overline{FAULT}}$ = 1 mA			100	mV
	OFF-state leakage	$V_{\overline{FAULT}}$ = 5.5 V			1	µA
	Overcurrent $\overline{FAULT}$ rising and falling deglitch		5	8.2	12	ms
$\overline{STATUS}$						
	Output low voltage	$I_{\overline{STATUS}}$ = 1 mA			100	mV
	OFF-state leakage	$V_{\overline{STATUS}}$ = 5.5 V			1	µA
THERMAL SHUTDOWN						
	Thermal shutdown threshold		155			°C
	Thermal shutdown threshold in current-limit		135			
	Hysteresis(2)			20		

6.6 Electrical Characteristics: High-Bandwidth Switch

Unless otherwise noted: –40 ≤ T_J ≤ 125°C, 4.5 V ≤ V_{IN} ≤ 5.5 V, V_{EN} = V_{IN}, V_{ILIM_SEL} = V_{IN}, V_{CTL1} = V_{CTL2} = V_{CTL3} = V_{IN}. $R_{\overline{FAULT}}$ = $R_{\overline{STATUS}}$ = 10 kΩ, R_{ILIM_HI} = 20 kΩ, R_{ILIM_LO} = 80.6 kΩ. Positive currents are into pins. Typical values are at 25°C. All voltages are with respect to GND.

PARAMETER		TEST CONDITIONS	MIN	TYP	MAX	UNIT
HIGH-BANDWIDTH ANALOG SWITCH						
	DP/DM switch ON resistance	V_{DP/DM_OUT} = 0 V, I_{DP/DM_IN} = 30 mA		2	4	Ω
		V_{DP/DM_OUT} = 2.4 V, I_{DP/DM_IN} = –15 mA		3	6	
	Switch resistance mismatch between DP / DM channels	V_{DP/DM_OUT} = 0 V, I_{DP/DM_IN} = 30 mA		0.05	0.15	Ω
		V_{DP/DM_OUT} = 2.4 V, I_{DP/DM_IN} = –15 mA		0.05	0.15	
	DP/DM switch OFF-state capacitance(1)	V_{EN}= 0 V, V_{DP/DM_IN} = 0.3 V, V_{ac} = 0.6 $V_{pk–pk}$, f = 1 MHz		3	3.6	pF
	DP/DM switch ON-state capacitance(2)	V_{DP/DM_IN} = 0.3 V, V_{ac} = 0.6 V_{pk-pk}, f = 1 MHz		5.4	6.2	pF
O_{IRR}	OFF-state isolation(3)	V_{EN}= 0 V, f = 250 MHz		33		dB
X_{TALK}	ON-state cross channel isolation(3)	f = 250 MHz		52		dB
	OFF-state leakage current	V_{EN} = 0 V, V_{DP/DM_IN} = 3.6 V, V_{DP/DM_OUT} = 0 V, measure I_{DP/DM_OUT}		0.1	1.5	µA
BW	Bandwidth (–3 dB)(3)	R_L = 50 Ω		2.6		GHz
t_{pd}	Propagation delay(3)			0.25		ns

(1) The resistance in series with the parasitic capacitance to GND is typically 250 Ω.
(2) The resistance in series with the parasitic capacitance to GND is typically 150 Ω
(3) These parameters are provided for reference only and do not constitute part of TI's published device specifications for purposes of TI's product warranty.

Copyright © 2017, Texas Instruments Incorporated

Electrical Characteristics: High-Bandwidth Switch (continued)

Unless otherwise noted: –40 ≤ T_J ≤ 125°C, 4.5 V ≤ V_{IN} ≤ 5.5 V, V_{EN} = V_{IN}, V_{ILIM_SEL} = V_{IN}, V_{CTL1} = V_{CTL2} = V_{CTL3} = V_{IN}. $R_{\overline{FAULT}}$ = $R_{\overline{STATUS}}$ = 10 kΩ, R_{ILIM_HI} = 20 kΩ, R_{ILIM_LO} = 80.6 kΩ. Positive currents are into pins. Typical values are at 25°C. All voltages are with respect to GND.

PARAMETER		TEST CONDITIONS	MIN	TYP	MAX	UNIT
t_{SK}	Skew between opposite transitions of the same port (t_{PHL} – t_{PLH})			0.1	0.2	ns

6.7 Electrical Characteristics: Charging Controller

Unless otherwise noted: –40 ≤ T_J ≤ 125°C, 4.5 V ≤ V_{IN} ≤ 5.5 V, V_{EN} = V_{IN}, V_{ILIM_SEL} = V_{IN}, V_{CTL1} = 0 V, V_{CTL2} = V_{CTL3} = V_{IN}. $R_{\overline{FAULT}}$ = $R_{\overline{STATUS}}$ = 10 kΩ, R_{ILIM_HI} = 20 kΩ, R_{ILIM_LO} = 80.6 kΩ. Positive currents are into pins. Typical values are at 25°C. All voltages are with respect to GND.

PARAMETER		TEST CONDITIONS		MIN	TYP	MAX	UNIT
SHORTED MODE (BC1.2 DCP)							
	DP_IN / DM_IN shorting resistance	VCTL1 = VIN, VCTL2 = VCTL3 = 0 V			125	200	Ω
1.2 V MODE							
	DP_IN /DM_IN output voltage	VCTL1 = VIN, VCTL2 = VCTL3 = 0 V		1.19	1.25	1.31	V
	DP_IN /DM_IN output impedance			60	75	94	kΩ
DIVIDER1 MODE							
	DP_IN divider1 output voltage	VCTL1 = VIN, VCTL2 = VCTL3 = 0 V		1.9	2	2.1	V
	DM_IN divider1 output voltage			2.57	2.7	2.84	V
	DP_IN output impedance			8	10.5	12.5	kΩ
	DM_IN output impedance			8	10.5	12.5	kΩ
DIVIDER2 MODE							
	DP_IN divider2 output voltage	IOUT = 1 A		2.57	2.7	2.84	V
	DM_IN divider2 output voltage			1.9	2	2.1	V
	DP_IN output impedance			8	10.5	12.5	kΩ
	DM_IN output impedance			8	10.5	12.5	kΩ
CHARGING DOWNSTREAM PORT							
V_{DM_SRC}	DM_IN CDP output voltage	VCTL1 = VCTL2 = VCTL3 = VIN	V_{DP_IN} = 0.6 V, –250 µA < I_{DM_IN} < 0 µA	0.5	0.6	0.7	V
V_{DAT_REF}	DP_IN rising lower window threshold for V_{DM_SRC} activation	VCTL1 = VCTL2 = VCTL3 = VIN		0.25		0.4	V
	Hysteresis(1)				50		mV
V_{LGC_SRC}	DP_IN rising upper window threshold for V_{DM_SRC} de-activation			0.8		1	V
	Hysteresis(1)				100		mV
I_{DP_SINK}	DP_IN sink current	VCTL1 = VCTL2 = VCTL3 = VIN	V_{DP_IN} = 0.6 V	40	70	100	µA
LOAD DETECT – NON-POWER WAKE							
I_{LD}	IOUT rising load detect current threshold	VCTL1 = VCTL2 = VCTL3 = VIN		635	700	765	mA
	Hysteresis(1)				50		mA
t_{LD_SET}	Load detect set time			140	200	275	ms
	Load detect reset time			1.9	3	4.2	s

(1) These parameters are provided for reference only and do not constitute part of Texas Instrument's published device specifications for purposes of Texas Instrument's product warranty.

Copyright © 2017, Texas Instruments Incorporated

Electrical Characteristics: Charging Controller (continued)

Unless otherwise noted: –40 ≤ T_J ≤ 125°C, 4.5 V ≤ V_{IN} ≤ 5.5 V, V_{EN} = V_{IN}, V_{ILIM_SEL} = V_{IN}, V_{CTL1} = 0 V, V_{CTL2} = V_{CTL3} = V_{IN}. $R_{\overline{FAULT}}$ = $R_{\overline{STATUS}}$ = 10 kΩ, R_{ILIM_HI} = 20 kΩ, R_{ILIM_LO} = 80.6 kΩ. Positive currents are into pins. Typical values are at 25°C. All voltages are with respect to GND.

PARAMETER		TEST CONDITIONS	MIN	TYP	MAX	UNIT
LOAD DETECT – POWER WAKE						
I_{OS_PW}	Power wake short-circuit current limit	VCTL1 = VCTL2 = 0 V, VCTL3 = VIN	32	55	78	mA
	I_{OUT} falling power wake reset current detection threshold		23	45	67	mA
	Reset current hysteresis(1)			5		mA
	Power wake reset time		10.7	15	20.6	s

Copyright © 2017, Texas Instruments Incorporated

6.8 Typical Characteristics

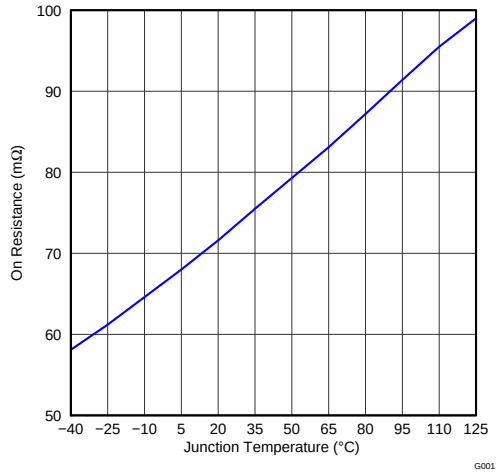

Figure 1. Power Switch ON Resistance vs Temperature

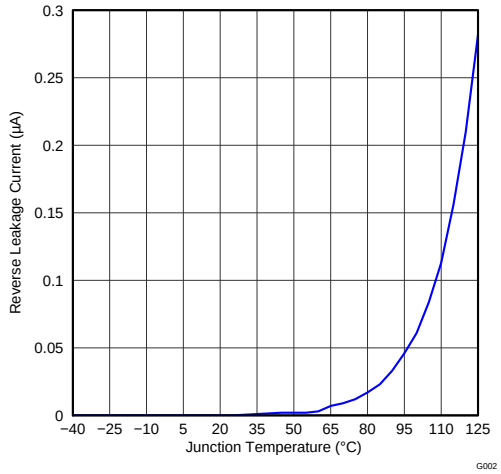

Figure 2. Reverse Leakage Current vs Temperature

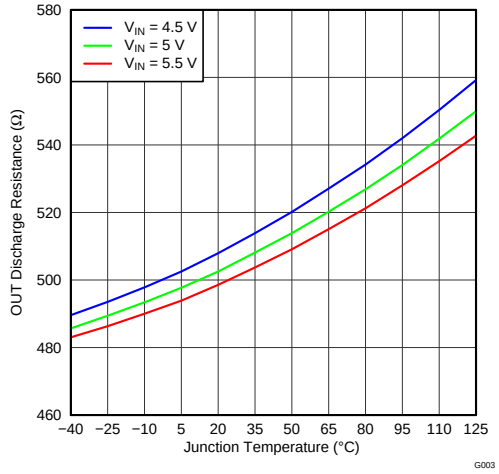

Figure 3. OUT Discharge Resistance vs Temperature

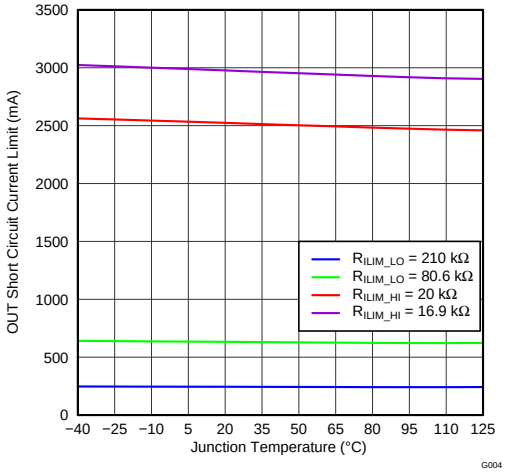

Figure 4. OUT Short-Circuit Current Limit vs Temperature

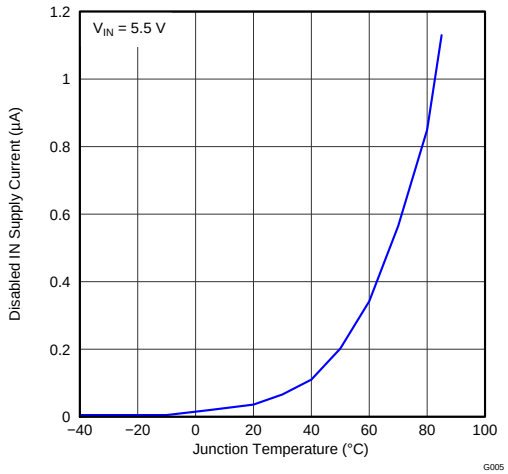

Figure 5. Disabled in Supply Current vs Temperature

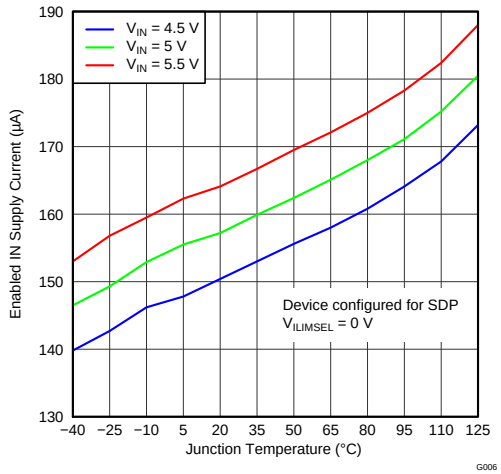

Figure 6. Enabled in Supply Current - SDP vs Temperature

Copyright © 2017, Texas Instruments Incorporated

Typical Characteristics (continued)

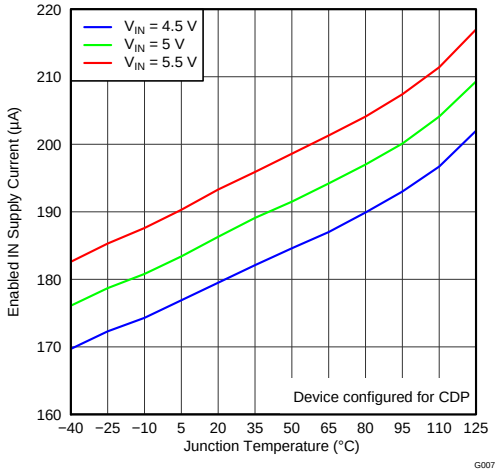

Figure 7. Enabled in Supply Current - CDP vs Temperature

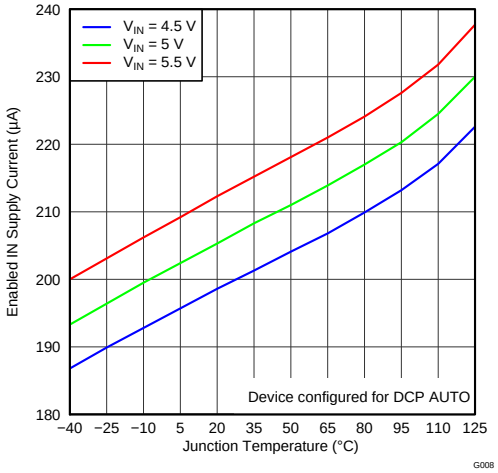

Figure 8. Enabled in Supply Current - DCP Auto vs Temperature

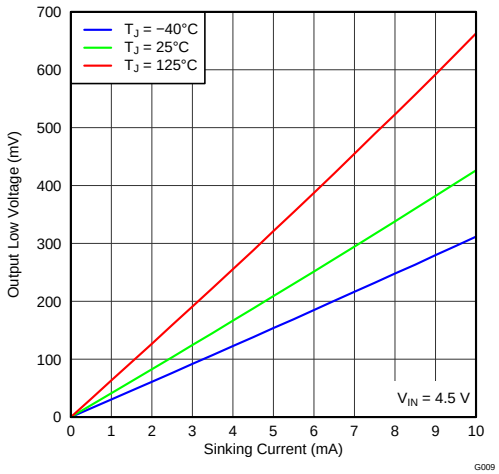

Figure 9. Status and Fault Output Low Voltage vs Sinking Current

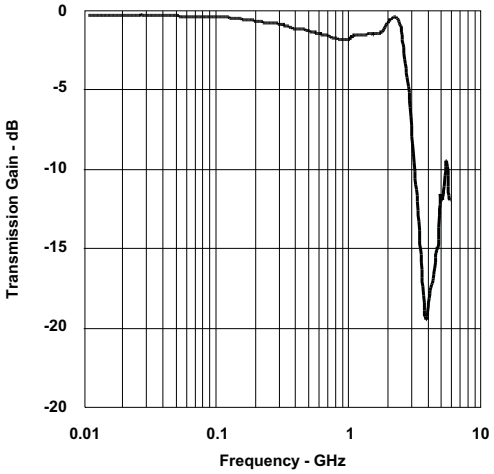

Figure 10. Data Transmission Characteristics vs Frequency

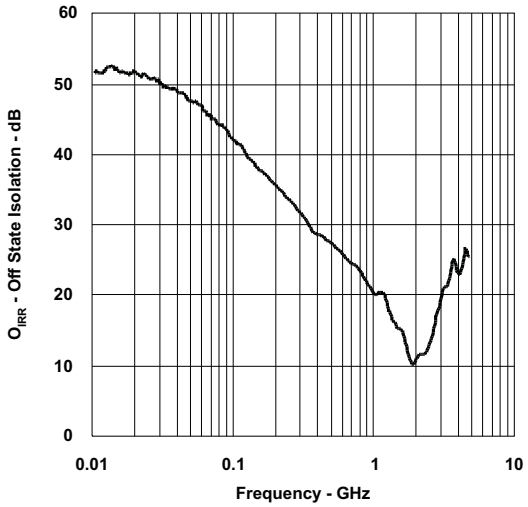

Figure 11. OFF-State Data Switch Isolation vs Frequency

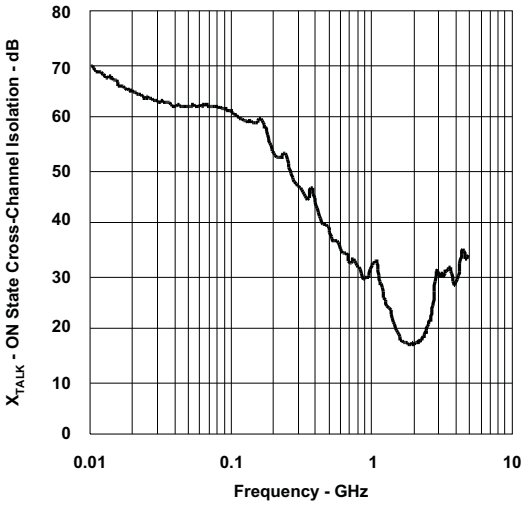

Figure 12. ON-State Cross-Channel Isolation vs Frequency

Copyright © 2017, Texas Instruments Incorporated

Typical Characteristics (continued)

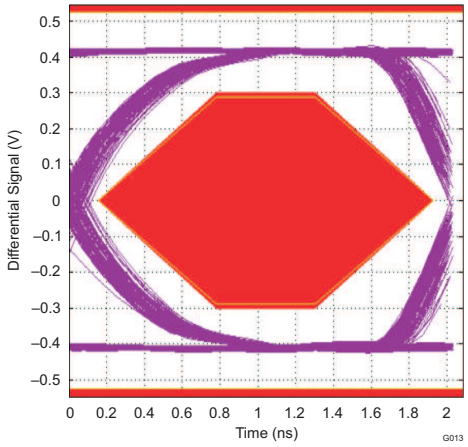

Figure 13. Eye Diagram Using USB Compliance Test Pattern (With No Switch)

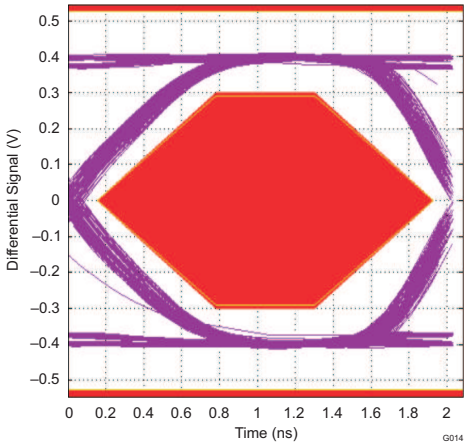

Figure 14. Eye Diagram Using USB Compliance Test Pattern (With Data Switch)

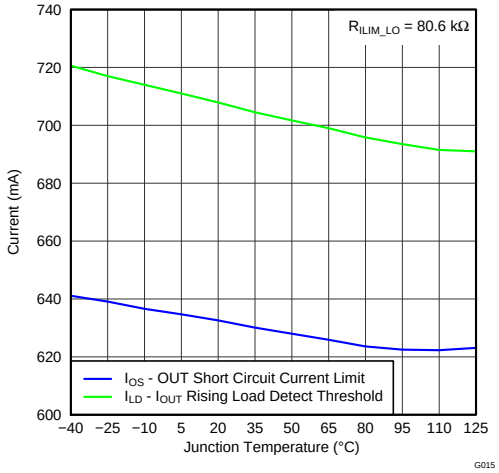

Figure 15. IOUT Rising Load Detect Threshold and Out Short-Circuit Current Limit vs Temperature

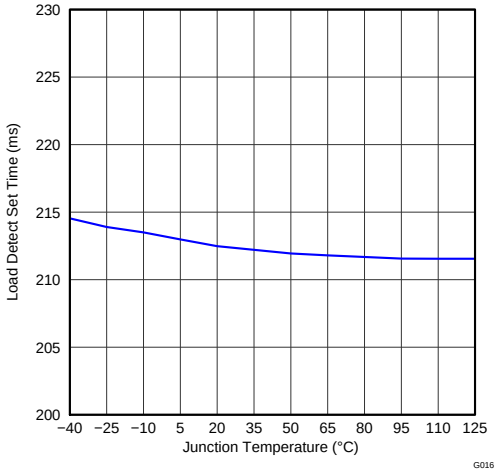

Figure 16. Load Detect Set Time vs Temperature

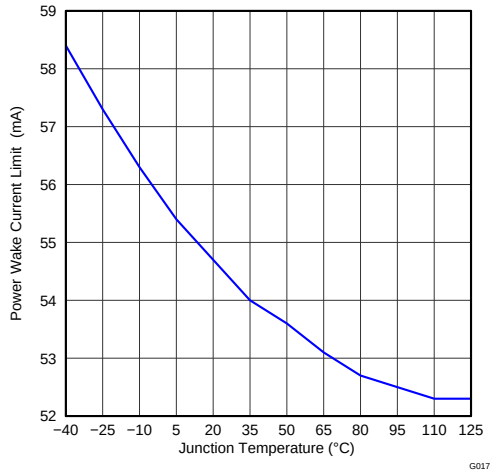

Figure 17. Power Wake Current Limit vs Temperature

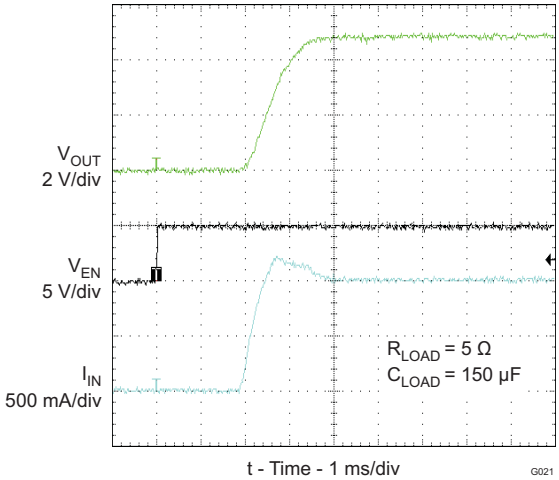

Figure 18. Turnon Response

Typical Characteristics (continued)

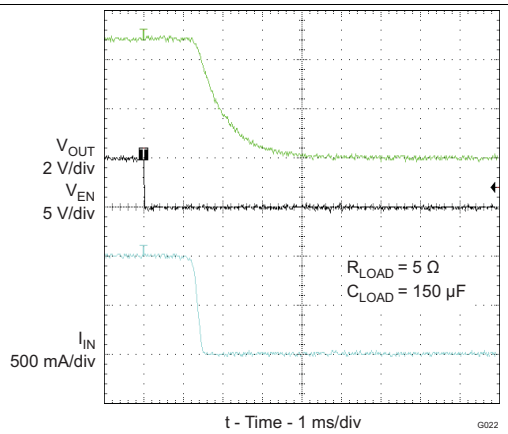

Figure 19. Turnoff Response

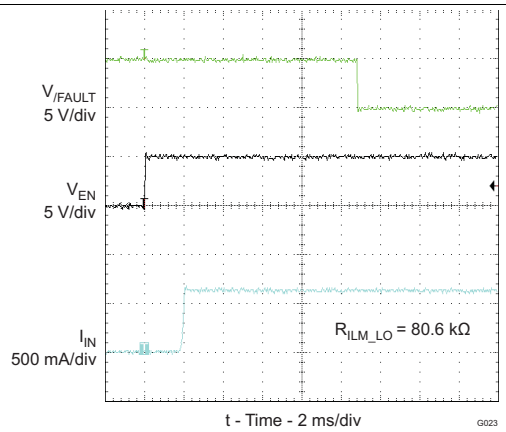

Figure 20. Device Enabled Into Short-Circuit

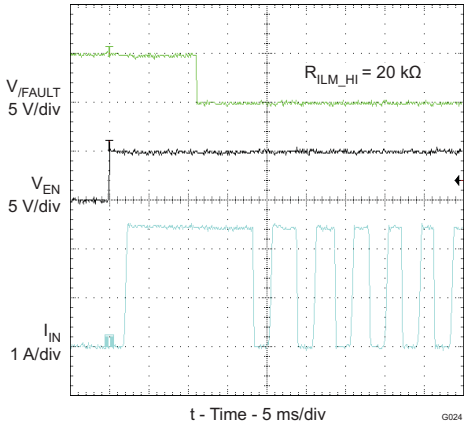

Figure 21. Device Enabled Into Short-Circuit - Thermal Cycling

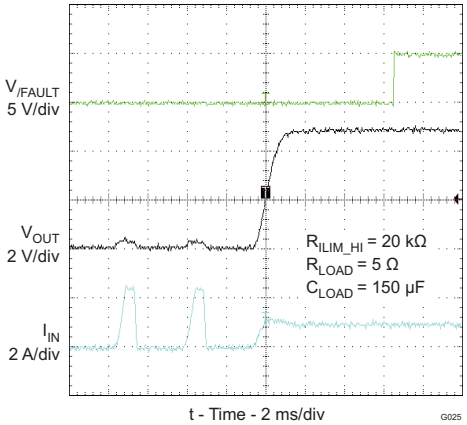

Figure 22. Short-Circuit to Full Load Recovery

Copyright © 2017, Texas Instruments Incorporated

7 Parameter Measurement Information

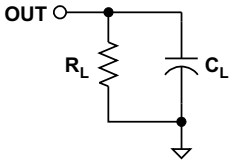

Figure 23. Out Rise/Fall Test Load

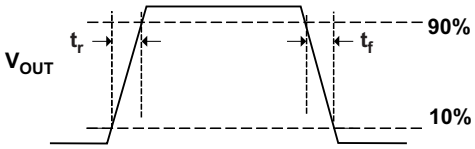

Figure 24. Power-ON and OFF Timing

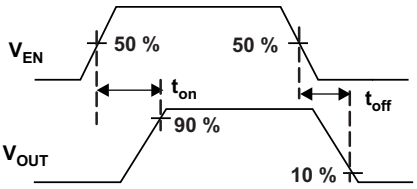

Figure 25. Enable Timing, Active High Enable

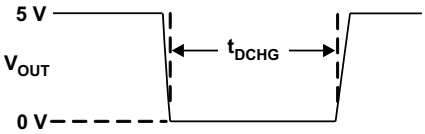

Figure 26. Out Discharge During Mode Change

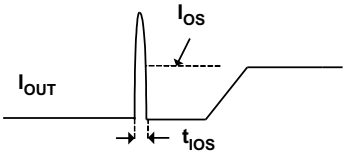

Figure 27. Output Short-Circuit Parameters

Copyright © 2017, Texas Instruments Incorporated

8 Detailed Description

8.1 Overview

The following overview references various industry standards. TI recommends consulting the most up-to-date standard to ensure the most recent and accurate information. Rechargeable portable equipment requires an external power source to charge its batteries. USB ports are a convenient location for charging, because of an available 5-V power source. Universally accepted standards are required to make sure host and client-side devices operate together in a system to ensure power management requirements are met. Traditionally, host ports following the USB 2.0 specification must provide at least 500 mA to downstream client-side devices. Because multiple USB devices can attach to a single USB port through a bus-powered hub, it is the responsibility of the client-side device to negotiate its power allotment from the host, ensuring the total current draw does not exceed 500 mA. In general, each USB device is granted 100 mA, and may request more current in 100-mA unit steps up to 500 mA. The host may grant or deny based on the available current. A USB 3.0 host port not only provides higher data rate than USB 2.0 port, but also raises the unit load from 100 mA to 150 mA. It is also required to provide a minimum current of 900 mA to downstream client-side devices.

Additionally, the success of USB makes the mini-USB connector a popular choice for wall adapter cables. This allows a portable device to charge from both a wall adapter, and USB port with only one connector. As USB charging has gained popularity, the 500-mA minimum defined by USB 2.0 or 900 mA for USB 3.0 has become insufficient for many handset and personal media players, which need a higher charging rate. Wall adapters can provide much more current than 500 mA/900 mA. Several new standards have been introduced, defining protocol handshaking methods that allow host and client devices to acknowledge and draw additional current beyond the 500 mA/900 mA minimum defined by USB 2.0 and 3.0, while still using a single micro-USB input connector.

The TPS2547 supports four of the most common USB charging schemes found in popular handheld media and cellular devices:

- USB Battery Charging Specification BC1.2
- Chinese Telecommunications Industry Standard YD/T 1591-2009
- Divider Mode
- 1.2-V Mode

YD/T 1591-2009 is a subset of BC1.2 specifications supported by vast majority of devices that implement USB changing. Divider and 1.2-V charging schemes are supported in devices from specific, yet popular device makers.

BC1.2 lists three different port types:

- Standard Downstream Port (SDP)
- Charging Downstream Port (CDP)
- Dedicated Charging Port (DCP)

BC1.2 defines a charging port as a downstream facing USB port that provides power for charging portable equipment. Under this definition, CDP and DCP are defined as charging ports.

Copyright © 2017, Texas Instruments Incorporated

8.2 Functional Block Diagram

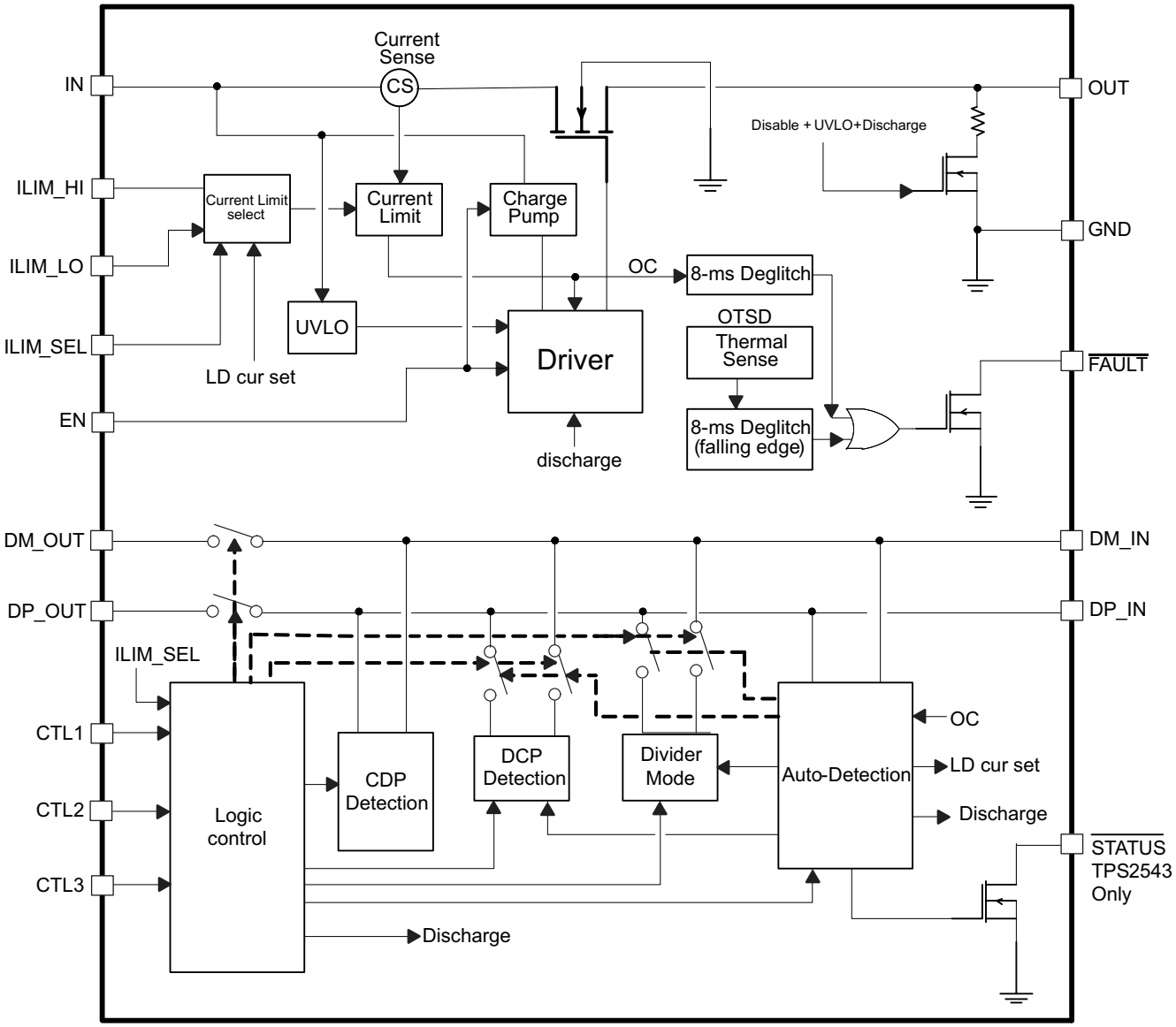

Copyright © 2016, Texas Instruments Incorporated

8.3 Feature Description

8.3.1 Standard Downstream Port (SDP) USB 2.0/USB 3.0

An SDP is a traditional USB port that follows USB 2.0 and 3.0 protocol, and supplies a minimum of 500 mA for USB 2.0 and 900 mA for USB 3.0 per port. USB 2.0 and 3.0 communications is supported, and the host controller must be active to allow charging. TPS2547 supports SDP mode in system power state S0, when system is completely powered ON, and fully operational. For more details on control pin (CTL1-CTL3) settings to program this state, see Table 3.

Feature Description (continued)

8.3.2 Charging Downstream Port (CDP)

A CDP is a USB port that follows USB BC1.2 and supplies a minimum of 1.5 A per port. It provides power and meets USB 2.0 requirements for device enumeration. USB 2.0 communications is supported, and the host controller must be active to allow charging. What separates a CDP from an SDP is the host-charge handshaking logic that identifies this port as a CDP. A CDP is identifiable by a compliant BC1.2 client device, and allows for additional current draw by the client device.

The CDP process is done in two steps. During step one, the portable equipment outputs a nominal 0.6-V output on the D+ line, and reads the voltage input on the D– line. The portable device detects it is connected to an SDP if the D– voltage is less than the nominal data detect voltage of 0.3 V. The portable device detects that it is connected to a Charging Port if the D– voltage is greater than the nominal data detect voltage of 0.3 V, and optionally less than 0.8 V.

The second step is necessary for portable equipment to determine if it is connected to CDP or DCP. The portable device outputs a nominal 0.6 V output on its D– line, and reads the voltage input on its D+ line. The portable device detects it is connected to a CDP if the data line being read remains less than the nominal data detect voltage of 0.3 V. The portable device detects it is connected to a DCP if the data line being read is greater than the nominal data detect voltage of 0.3 V.

TPS2547 supports CDP mode in system power state S0 when system is completely powered ON, and fully operational. For more details on control pin (CTL1-CTL3) settings to program this state, see Table 3.

8.3.3 Dedicated Charging Port (DCP)

A DCP only provides power but does not support data connection to an upstream port. As shown in following sections, a DCP is identified by the electrical characteristics of the data lines. The TPS2547 emulates DCP in two charging states, namely DCP Forced and DCP Auto as shown in Figure 37. In DCP Forced state the device supports one of the two DCP charging schemes, namely Divider1 or Shorted. In the DCP Auto state, the device charge detection state machine is activated to selectively implement charging schemes involved with the Shorted, Divider1, Divider2, and 1.2-V modes. Shorted DCP mode complies with BC1.2 and Chinese Telecommunications Industry Standard YD/T 1591-2009, while the Divider and 1.2-V modes are employed to charge devices that do not comply with BC1.2 DCP standard.

8.3.3.1 DCP BC1.2 and YD/T 1591-2009

Both standards define that the D+ and D– data lines must be shorted together with a maximum series impedance of 200 Ω. This is shown in Figure 28.

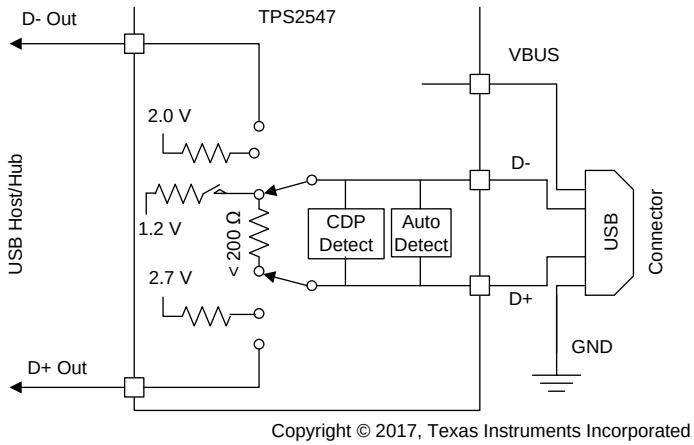

Figure 28. DCP Supporting BC1.2/YD/T 1591-2009

Copyright © 2017, Texas Instruments Incorporated

Feature Description (continued)

8.3.3.2 DCP Divider Charging Scheme

There are two Divider charging scheme supported by the device, Divider1 and Divider2 as shown in Figure 29 and Figure 30. In Divider1 charging scheme the device applies 2 V and 2.7 V to D+ and D– data line respectively. This is reversed in Divider2 mode.

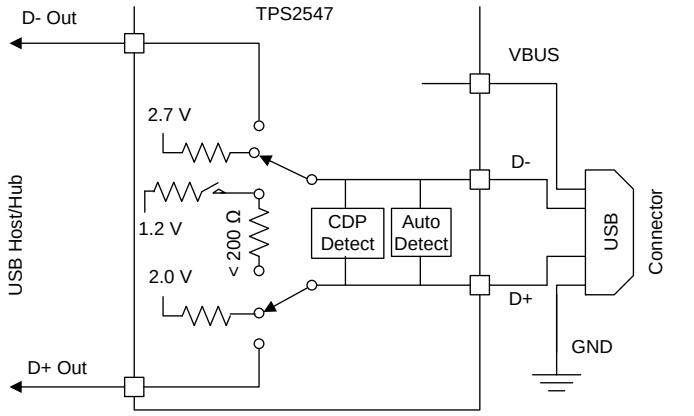

Copyright © 2017, Texas Instruments Incorporated

Figure 29. DCP Divider1 Charging Scheme

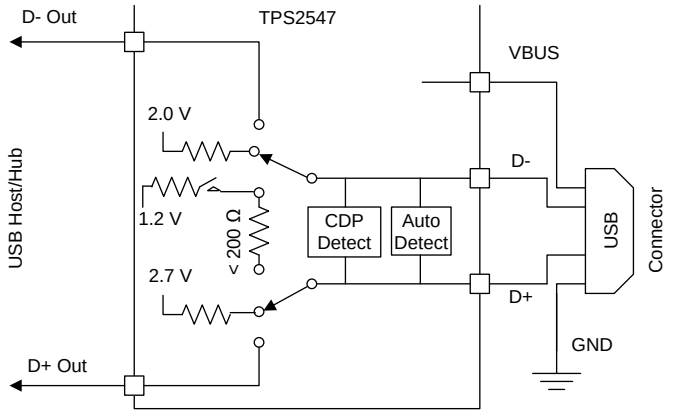

Copyright © 2017, Texas Instruments Incorporated

Figure 30. Divider2 Charging Scheme

Feature Description (continued)

8.3.3.3 DCP 1.2-V Charging Scheme

1.2-V charging scheme is used by some handheld devices to enable fast charging at 2 A. TPS2547 supports this scheme in the DCP-Auto mode before the device enters BC1.2 shorted mode. To simulate this charging scheme D+/D– lines are shorted and pulled-up to 1.2 V for fixed duration then device moves to DCP shorted mode as defined in BC1.2 specification. This is shown in Figure 31.

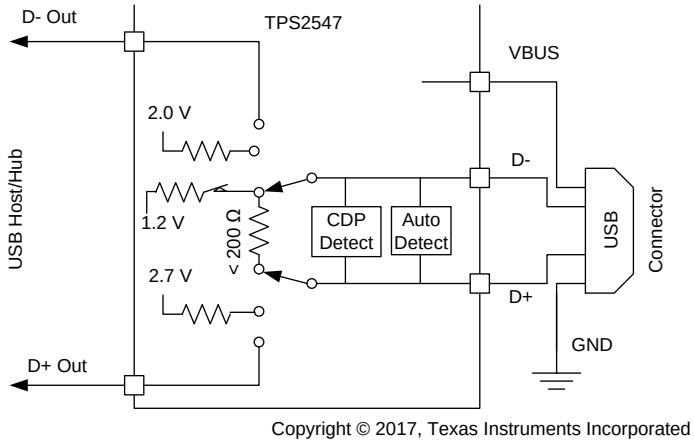

Figure 31. DCP 1.2-V Charging Scheme

8.3.4 Wake on USB Feature (Mouse/Keyboard Wake Feature)

8.3.4.1 USB 2.0 Background Information

The TPS2547 data lines interface with USB 2.0 devices. USB 2.0 defines three types of devices according to data rate. These devices and their characteristics relevant to TPS2547 Wake on USB operation are shown below.

Low-speed USB devices:

- 1.5 Mbps
- Wired mice and keyboards are examples
- No devices that need battery charging
- All signaling performed at 2 V and 0.8 V hi/lo logic levels
- D– high to signal connect and when placed into suspend
- D– high when not transmitting data packets

Full-speed USB devices:

- 12 Mbps
- Wireless mice and keyboards are examples
- Legacy phones and music players are examples
- Some legacy devices that need battery charging
- All signaling performed at 2 V and 0.8 V hi/lo logic levels
- D+ high to signal connect and when placed into suspend
- D+ high when not transmitting data packets

High-speed USB devices:

- 480 Mbps
- Tablets, phones and music players are examples
- Many devices that need battery charging
- Connect and suspend signaling performed at 2 V and 0.8 V hi/lo logic levels
- Data packet signaling performed a logic levels below 0.8 V
- D+ high to signal connect and when placed into suspend (same as a full-speed device)

Copyright © 2017, Texas Instruments Incorporated

Feature Description (continued)

- D+ and D– low when not transmitting data packets

8.3.4.2 Wake On USB

Wake on USB is the ability of a wake configured USB device to wake a computer system from its S3 sleep state back to its S0 working state. Wake on USB requires the data lines to be connected to the system USB host before the system is placed into its S3 sleep state, and remain continuously connected until they are used to wake the system.

The TPS2547 supports low-speed and high-speed HID (human interface device like mouse/key board) wake function. There are two scenarios under which wake on mouse are supported by the TPS2547. The specific CTL pin changes that the TPS2547 overrides are shown below. The information is presented as CTL1, CTL2, CTL3. The ILIM_SEL pin plays no role.

1. 111 (CDP/SDP2) to 011 (DCP-Auto)
2. 010 (SDP1) to 011 (DCP-Auto)

NOTE

The 110 (SDP1) to 011 (DCP-Auto) transition is not supported. This is done for practical reasons, because the transition involves changes to two CTL pins. Depending on which CTL pin changes first, the device sees either a temporary 111 or 010 command. The 010 command is safe but the 111 command causes an OUT discharge as the TPS2547 instead proceeds to the 111 state.

8.3.4.3 USB Slow-Speed and Full-Speed Device Recognition

TPS2547 is capable of detecting LS or FS device attachment when TPS2547 is in SDP or CDP mode. Per USB specification, when no device is attached, the D+ and D– lines are near ground level. When a low-speed compliant device is attached to the TPS2547 charging port, D– line is pulled high in its idle state (mouse/keyboard not activated). However, when a FS device is attached then the opposite is true in its idle state, that is, D+ is pulled high and D– remains at ground level.

TPS2547 monitors both D+ and D– lines while CTL pin settings are in CDP or SDP mode to detect LS or FS HID device attachment. To support HID sleep wake, TPS2547 must first determine that it is attached to a LS or FS device when system is in S0 power state. TPS2547 does this as described above. While supporting a LS HID wake is straight forward, supporting FS HID requires making a distinction between a FS and a HS device. This is because a high-speed device always presents itself initially as a full speed device (by a 1.5-K pullup resistor on D+). The negotiation for high speed then makes the distinction whereby the 1.5-K pullup resistor gets removed.

TPS2547 handles the distinction between a FS and HS device at connect by memorizing if the D+ line goes low after connect. A HS device after connect always undergoes negotiation for HS, which requires the 1.5-kΩ resistor pullup on D+ to be removed. To memorize a FS device, TPS2547 requires the device to remain connected for at least 60 seconds while the system is in S0 mode, before placing it in sleep or S3 mode.

NOTE

If system is placed in sleep mode earlier than the 60 second window, a FS device may not get recognized and hence could fail to wake system from S3. This requirement does not apply for LS device.

8.3.4.3.1 No CTL Pin Timing Requirement After Wake Event and Transition from S3 to S0

Unlike the TPS2543, there is no CTL pin timing requirement for the TPS2547 when the wake configured USB device wakes the system from S3 back to S0. The TPS2543 requires the CTL pins to transition from the DCP-Auto setting back to the SDP/CDP setting within 64 ms of the attached USB device signaling a wake event (for example, mouse clicked or keyboard key pressed). No such timing condition exists for the TPS2547.

Copyright © 2017, Texas Instruments Incorporated

Feature Description (continued)

8.3.5 Load Detect

TPS2547 offers system designers unique power management strategy not available in the industry from similar devices. There are two power management schemes supported by the TPS2547 through the $\overline{\text{STATUS}}$ pin, they are:

- Power Wake (PW)
- Port Power Management (PPM)

Either feature may be implemented in a system depending on power savings goals for the system. In general, Power Wake feature is used mainly in mobile systems, like a notebook, where it is imperative to save battery power when system is in deep sleep (S4/S5) state. Oppositely, Port Power Management feature would be implemented where multiple charging ports are supported in the same system, and system power rating is not capable of supporting high-current charging on multiple ports simultaneously.

8.3.6 Power Wake

The goal of the power wake feature is to save system power when the system is in S4/S5 state. In the S4/S5 state, the system is in deep sleep and typically running off the battery; so every mW in system power savings translates to extending battery life. In this state, the TPS2547 monitors charging current at the OUT pin and provide a mechanism through the $\overline{\text{STATUS}}$ pin to switch out the high-power DC-DC controller and switch in a low power LDO when charging current requirement is < 45 mA (typical). This would be the case when no peripheral device is connected at the charging port or if a device has attained its full battery charge and draws <45 mA. A power wake flow chart and description is shown in Figure 32.

Copyright © 2017, Texas Instruments Incorporated

Feature Description (continued)

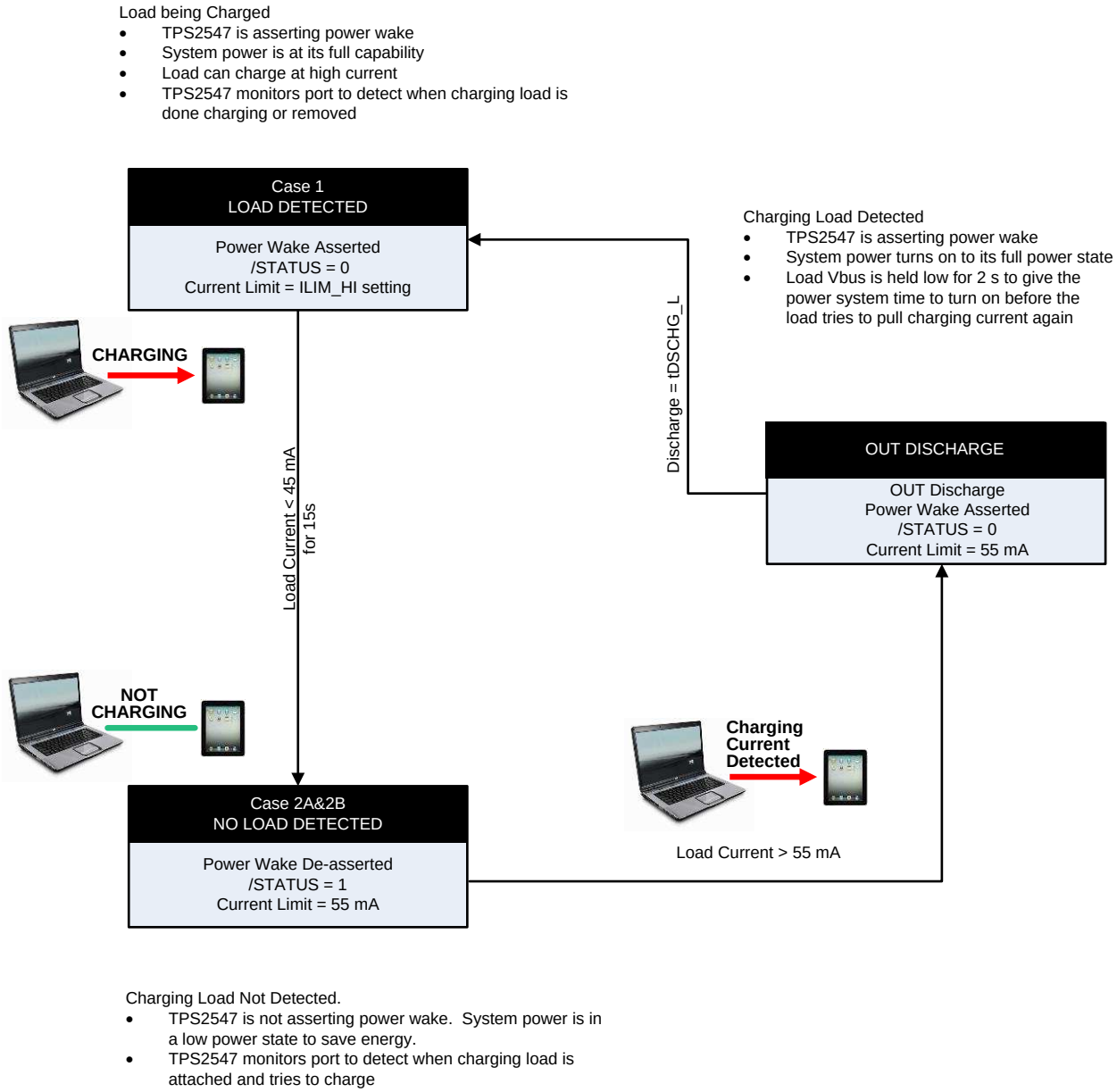

Copyright © 2017, Texas Instruments Incorporated

Figure 32. Power Wake Flow Chart

Feature Description (continued)

8.3.6.1 Implementing Power Wake in Notebook System

An implementation of power wake in notebook platforms with the TPS2547 is shown in Figure 33 to Figure 35. Power wake function is used to select between a high-power DC-DC converter, and low-power LDO (100 mA) based on charging requirements. System power saving is achieved when under no charging conditions (the connected device is fully charged or no device is connected) the DC-DC converter is turned off (to save power because it is less efficient in low-power operating region) and the low-power LDO supplies standby power to the charging port.

Power wake is activated in S4/S5 mode (0011 setting, see Table 3), TPS2547 is charging connected device as shown in Figure 33, $\overline{\text{STATUS}}$ is pulled LO (Case 1) which switches-out the LDO and switches-in the DC-DC converter to handle high-current charging.

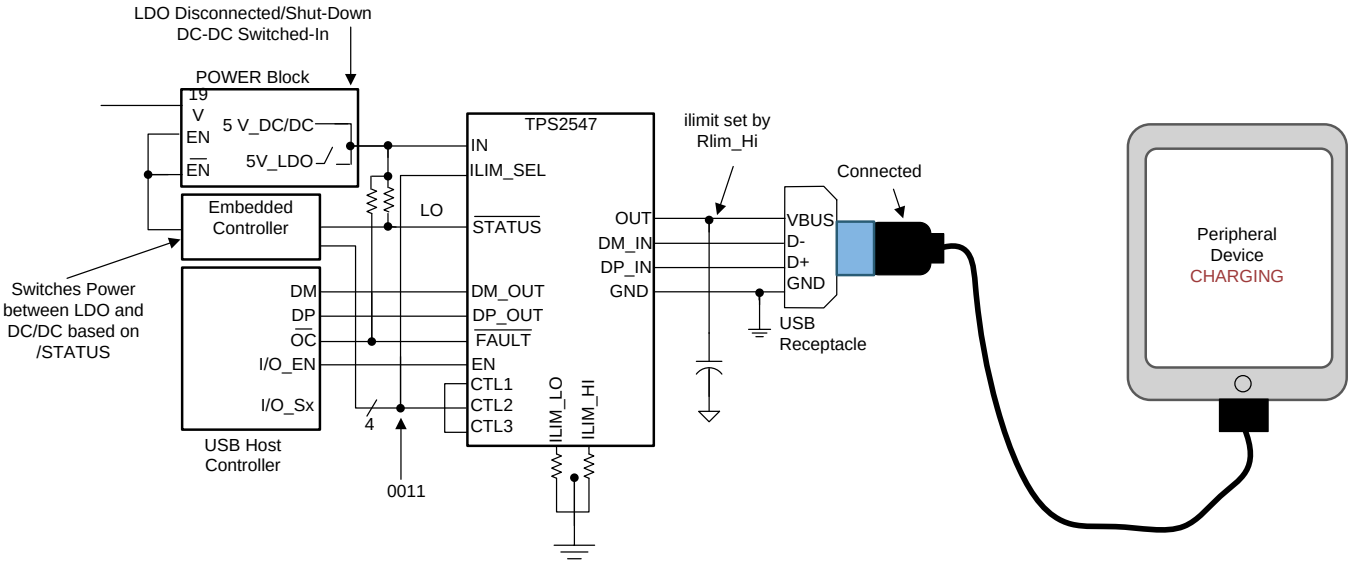

Copyright © 2017, Texas Instruments Incorporated

Figure 33. Case 1: System in S4/S5, Device Charging

As shown in Figure 34 and Figure 35, when connected device is fully charged or gets disconnected from the charging port, the charging current falls. If charging current falls to < 45 mA and stays below this threshold for over 15 s, TPS2547 automatically sets a 55-mA internal current limit and $\overline{\text{STATUS}}$ is de-asserted (pulled HI). As shown in Figure 34 and Figure 35. This results in DC-DC converter turning off, and the LDO turning on. Current limit of 55 mA is set to prevent the low-power LDO output voltage from collapsing in case there is a spike in current draw due to device attachment or other activity such as display panel LED turning ON in connected device.

Following Power Wake flow chart (Figure 32) when a device is attached and draws > 55 mA of charging current the TPS2547 hits its internal current limit. This triggers the device to assert $\overline{\text{STATUS}}$ (LO), and turn on the DC-DC converter and turn off the LDO. TPS2547 discharges OUT for > 2 s (typical), allowing the main power supply to turn on. After the discharge, the device turns back on with current limit set by ILIM_HI (Case 1).

Copyright © 2017, Texas Instruments Incorporated

Feature Description (continued)

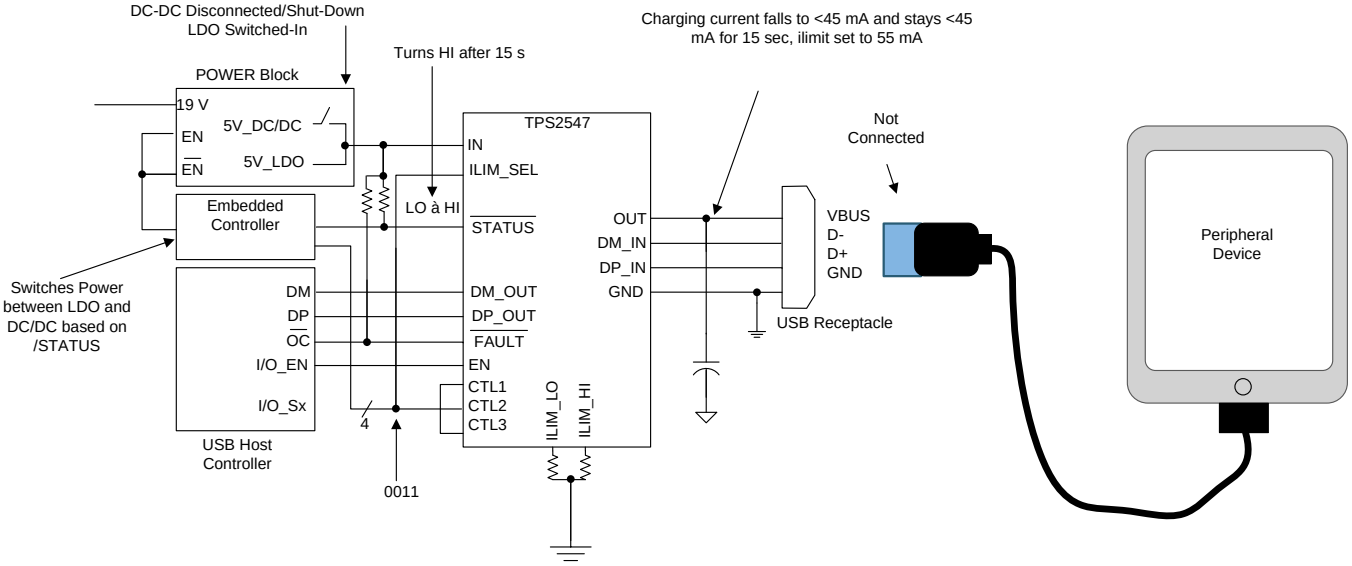

Copyright © 2017, Texas Instruments Incorporated

Figure 34. Case 2A: System in S4/S5, No Device Attached

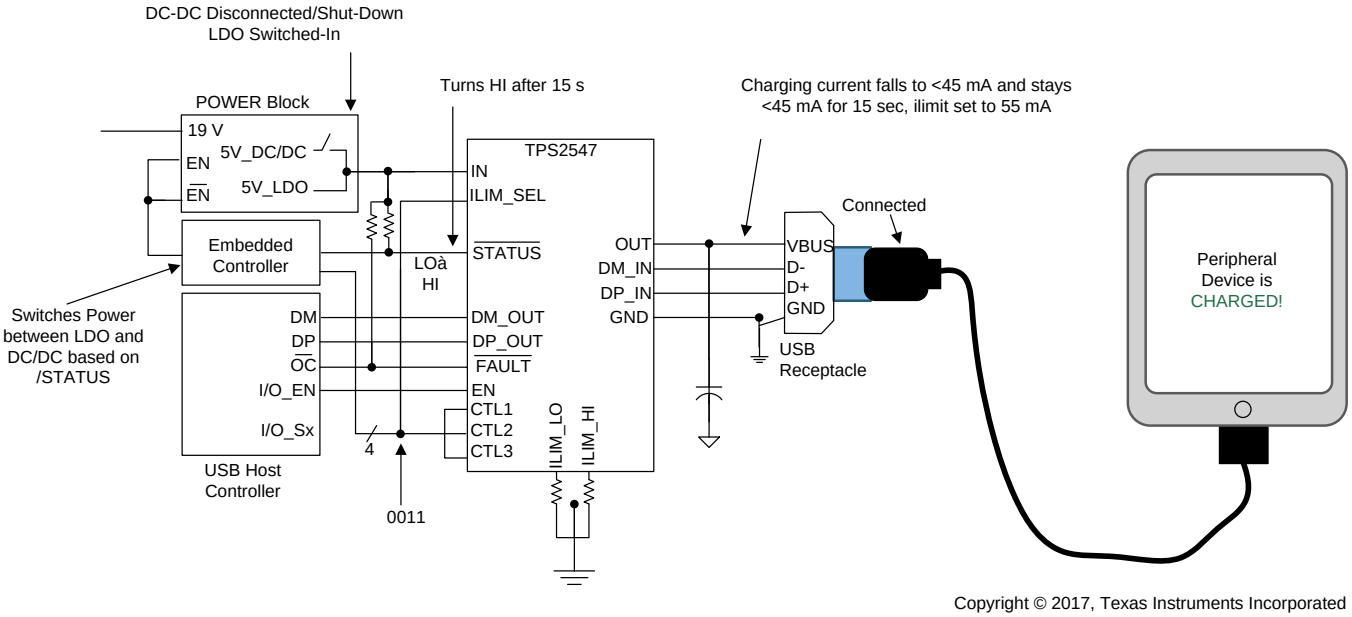

Copyright © 2017, Texas Instruments Incorporated

Figure 35. Case 2B: System in S4/S5, Attached Device Fully Charged

Feature Description (continued)

8.3.7 Port Power Management (PPM)

PPM is the intelligent and dynamic allocation of power for systems that have multiple charging ports but cannot power them all simultaneously. The goals of this feature are:

- Enhance user experience because user does not have to search for charging port
- Ensure the power supply only has to be designed for a reasonable charging load

Initially all ports are allowed to broadcast high-current charging, charging current limit is based on ILIM_HI resistor setting. System monitors $\overline{\text{STATUS}}$ to see when high-current loads are present. Once allowed number of ports assert $\overline{\text{STATUS}}$, remaining ports are toggled to a non-charging port. Non-charging ports are SDP ports with current limit based on ILIM_LO. TPS2547 allows for a system to toggle between charging and non-charging ports either with an OUT discharge or without an OUT discharge.

8.3.7.1 Benefits of PPM

- Delivers better user experience
- Prevents overloading of system's power supply
- Allows for dynamic power limits based on system state
- Allows every port to potentially be a high-power charging port
- Allows for smaller power supply capacity because the loading is controlled

8.3.7.2 PPM Details

All ports are allowed to broadcast high-current charging – CDP or DCP. Current limit is based on ILIM_HI and system monitors $\overline{\text{STATUS}}$ pin to see when high-current loads are present. Once allowed number of ports assert $\overline{\text{STATUS}}$, remaining ports are toggled to a SDP non-charging port. SDP current limit is based on ILIM_LO setting. SDP ports are automatically toggled back to CDP or DCP mode when a charging port de-asserts $\overline{\text{STATUS}}$.

Based on CTL settings there is a provision for a port to toggle between charging and non-charging ports either with a Vbus discharge or without a Vbus discharge. For example when a port is in SDP2 mode (1110) and its ILIM_SEL pin is toggled to 1 due to another port releasing its high-current requirements. The SDP2 port automatically reverts to CDP mode (1111) without a discharge event. This is desirable if this port was connected to a media device where it was syncing data from the SDP2 port; a discharge event would disrupt the syncing activity on the port and cause user confusion.

$\overline{\text{STATUS}}$ trip point is based on the programmable ILIM_LO current limit set point. This does not mean $\overline{\text{STATUS}}$ is a current limit – the port itself is using the ILIM_HI current limit. Since ILIM_LO defines the current limit for a SDP port, it works well to use the ILIM_LO value to define a high-current load. $\overline{\text{STATUS}}$ asserts in CDP and DCP when load current is above ILIM_LO+60 mA for 200 ms. $\overline{\text{STATUS}}$ also asserts in CDP when an attached device does a BC1.2 primary detection. $\overline{\text{STATUS}}$ de-asserts in CDP and DCP when the load current is below ILIM_LO+10 mA for 3 s.

8.3.7.3 Implementing PPM in a System with Two Charging Ports

Figure 36 shows implementation of two charging ports, each with its own TPS2547. In this example 5-V power supply for the two charging ports is rated at < 3 A or < 15 W maximum. Both devices have R_{LIM} chosen to correspond to the low (0.9 A) and high (1.5 A) current limit setting for the port. In this implementation the system can support only one of the two ports at 1.5-A charging current while the other port is set to SDP mode and I_{LIMIT} corresponding to 0.9 A.

Copyright © 2017, Texas Instruments Incorporated

Feature Description (continued)

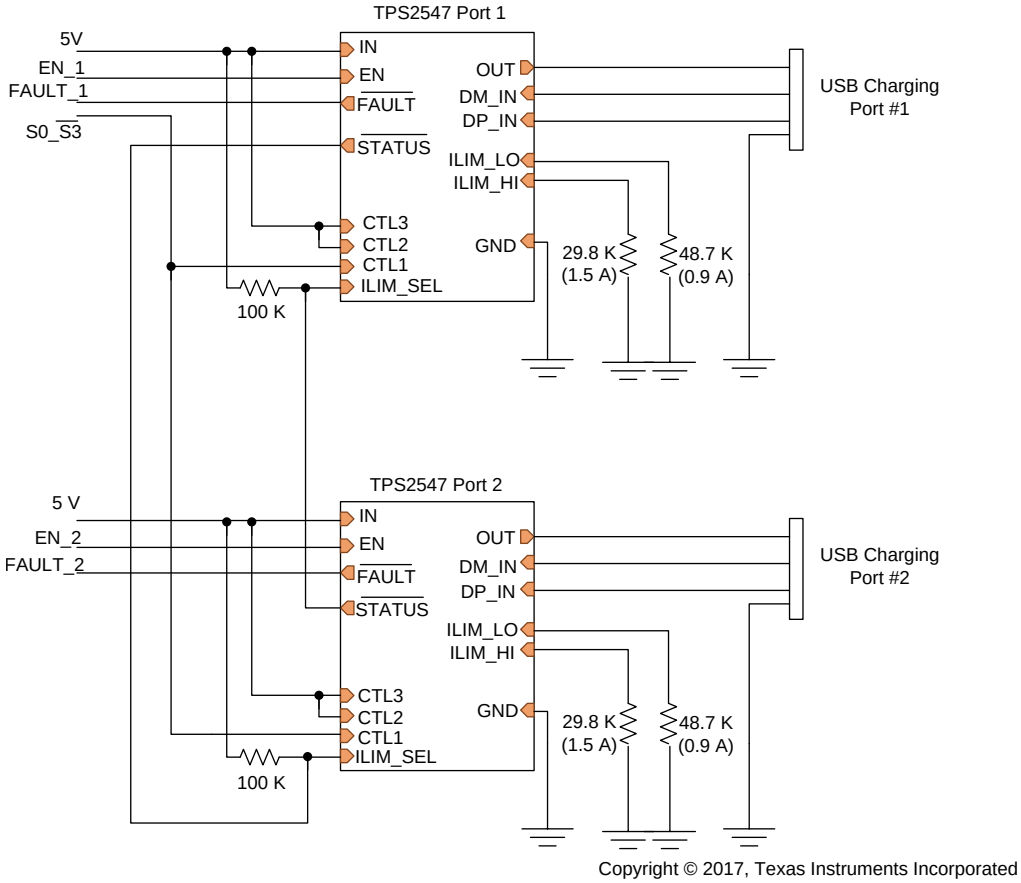

Figure 36. Implementing Port Power Management in a System Supporting Two Charging Ports

8.3.8 Overcurrent Protection

When an overcurrent condition is detected, the device maintains a constant output current and reduces the output voltage accordingly. Two possible overload conditions can occur. In the first condition, the output has been shorted before the device is enabled or before VIN has been applied. The TPS2547 senses the short and immediately switches into a constant-current output. In the second condition, a short or an overload occurs while the device is enabled. At the instant the overload occurs, high currents may flow for nominally one to two microseconds before the current-limit circuit can react. The device operates in constant-current mode after the current-limit circuit has responded. Complete shutdown occurs only if the fault is present long enough to activate thermal limiting. The device remains off until the junction temperature cools approximately 20°C and then re-starts. The device continues to cycle on/off until the overcurrent condition is removed.

8.3.9 FAULT Response

The $\overline{\text{FAULT}}$ open-drain output is asserted (active low) during an overtemperature or current limit condition. The output remains asserted until the fault condition is removed. The TPS2547 is designed to eliminate false $\overline{\text{FAULT}}$ reporting by using an internal de-glitch circuit for current limit conditions without the need for external circuitry. This ensures that $\overline{\text{FAULT}}$ is not accidentally asserted due to normal operation such as starting into a heavy capacitive load. overtemperature conditions are not de-glitched and assert the $\overline{\text{FAULT}}$ signal immediately.

8.3.10 Undervoltage Lockout (UVLO)

The undervoltage lockout (UVLO) circuit disables the power switch until the input voltage reaches the UVLO turnon threshold. Built-in hysteresis prevents unwanted oscillations on the output due to input voltage drop from large current surges.

Feature Description (continued)

8.3.11 Thermal Sense

The TPS2547 protects itself with two independent thermal sensing circuits that monitor the operating temperature of the power distribution switch and disables operation if the temperature exceeds recommended operating conditions. The device operates in constant-current mode during an overcurrent condition, which increases the voltage drop across power switch. The power dissipation in the package is proportional to the voltage drop across the power switch, so the junction temperature rises during an overcurrent condition. The first thermal sensor turns off the power switch when the die temperature exceeds 135°C and the part is in current limit. The second thermal sensor turns off the power switch when the die temperature exceeds 155°C regardless of whether the power switch is in current limit. Hysteresis is built into both thermal sensors, and the switch turns on after the device has cooled by approximately 20°C. The switch continues to cycle off and on until the fault is removed. The open-drain false reporting output $\overline{\text{FAULT}}$ is asserted (active low) during an overtemperature shutdown condition.

8.4 Device Functional Modes

Table 1 shows the differences between these ports.

Table 1. Operating Modes

PORT TYPE	SUPPORT USB 2.0 COMMUNICATION	MAXIMUM ALLOWABLE CURRENT DRAW BY PORTABLE DEVICE (A)
SDP (USB 2.0)	Yes	0.5
SDP (USB 3.0)	Yes	0.9
CDP	Yes	1.5
DCP	No	1.5

8.4.1 DCP Auto Mode

As mentioned above the TPS2547 integrates an auto-detect state machine that supports all the above DCP charging schemes. It starts in Divider1 scheme, however if a BC1.2 or YD/T 1591-2009 compliant device is attached, the TPS2547 responds by discharging OUT, turning back on the power switch and operating in 1.2 V mode briefly and then moving to BC1.2 DCP mode. It then stays in that mode until the device releases the data line, in which case it goes back to Divider1 scheme. When a Divider1 compliant device is attached the TPS2547 stays in Divider1 state.

Also, the TPS2547 automatically switches between the Divider1 and Divider2 schemes based on charging current drawn by the connected device. Initially the device sets the data lines to Divider1 scheme. If charging current of > 750 mA is measured by the TPS2547 it switches to Divider2 scheme and test to see if the peripheral device still charges at a high current. If it does then it stays in Divider2 scheme otherwise it reverts to Divider1 scheme.

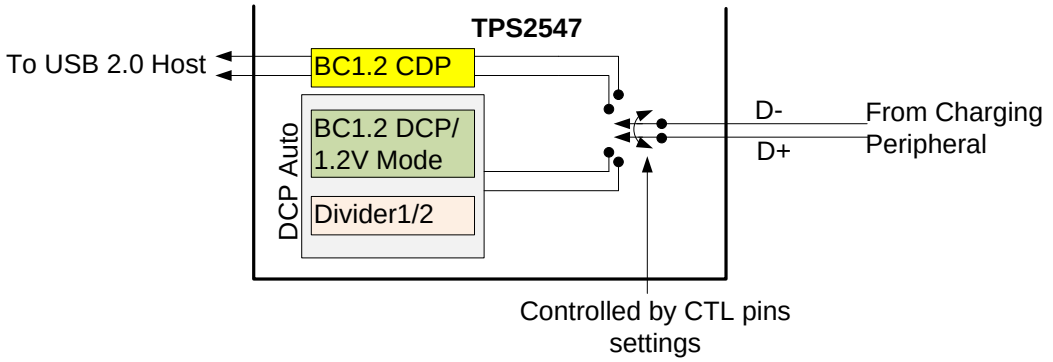

Copyright © 2017, Texas Instruments Incorporated

Figure 37. DCP Auto Mode

Copyright © 2017, Texas Instruments Incorporated

8.4.2 DCP Forced Shorted / DCP Forced Divider1

In this mode the device is permanently set to one of the DCP schemes (BC1.2/ YD/T 1591-2009 or Divider1) as commanded by its control pin setting per Table 3.

8.4.3 High-Bandwidth Data Line Switch

The TPS2547 passes the D+ and D– data lines through the device to enable monitoring and handshaking while supporting charging operation. A wide bandwidth signal switch is used, allowing data to pass through the device without corrupting signal integrity. The data line switches are turned on in any of CDP or SDP operating modes. The EN input also needs to be at logic High for the data line switches to be enabled.

NOTE

- While in CDP mode, the data switches are ON even while CDP handshaking is occurring
- The data line switches are OFF if EN or all CTL pins are held low, or if in DCP mode. They are not automatically turned off if the power switch (IN to OUT) is in current limit
- The data switches are for USB 2.0 differential pair only. In the case of a USB 3.0 host, the super speed differential pairs must be routed directly to the USB connector without passing through the TPS2547
- Data switches are OFF during OUT (VBUS) discharge

Table 2 can be used as an aid to program the TPS2547 per system states however not restricted to below settings only.

Table 2. Control Pin Settings Matched to System Power States

SYSTEM GLOBAL POWER STATE	TPS2547 CHARGING MODE	CTL1	CTL2	CTL3	ILIM_SEL	CURRENT LIMIT SETTING
S0	SDP1	1	1	0	1 or 0	ILIM_HI / ILIM_LO
S0	SDP2, no discharge to / from CDP	1	1	1	0	ILIM_LO
S0	CDP, load detection with ILIM_LO + 60-mA thresholds or if a BC1.2 primary detection occurs	1	1	1	1	ILIM_HI
S4/S5	Auto mode, load detection with power wake thresholds	0	0	1	1	ILIM_HI
S3/S4/S5	Auto mode, no load detection	0	0	1	0	ILIM_HI
S3	Auto mode, keyboard/mouse wake up, load detection with ILIM_LO + 60 mA thresholds	0	1	1	1	ILIM_HI
S3	Auto mode, keyboard/mouse wake-up, no load detection	0	1	1	0	ILIM_HI
S3	SDP1, keyboard/mouse wake-up	0	1	0	1 or 0	ILIM_HI / ILIM_LO

Copyright © 2017, Texas Instruments Incorporated

8.4.4 Device Truth Table (TT)

Device TT lists all valid bias combinations for the three control pins CTL1-3 and ILIM_SEL pin and their corresponding charging mode. It is important to note that the TT purposely omits matching charging modes of the TPS2547 with global power states (S0-S5) as device is agnostic to system power states. The TPS2547 monitors CTL inputs and transitions to the charging state it is commanded to go to (except when LS/FS HID device is detected). For example, if sleep charging is desired when system is in standby or hibernate state then the user must set TPS2547 CTL pins to correspond to DCP_Auto charging mode as shown in the below table. When the system resumes operation mode set the control pins to correspond to SDP or CDP mode, as seen in Table 3.

Table 3. Truth Table

CTL1	CTL2	CTL3	ILIM_SEL	MODE	CURRENT LIMIT SETTING	STATUS OUTPUT (ACTIVE LOW)	COMMENT
0	0	0	0	Discharge	NA	OFF	OUT held low.
0	0	0	1	Discharge	NA	OFF	
0	0	1	0	DCP_Auto	ILIM_HI	OFF	Data lines disconnected.
0	0	1	1	DCP_Auto	I_{OS_PW} & ILIM_HI(1)	DCP load present(2)	Data lines disconnected and load detect function active.
0	1	0	0	SDP1	ILIM_LO	OFF	Data lines connected.
0	1	0	1	SDP1	ILIM_HI	OFF	
0	1	1	0	DCP_Auto	ILIM_HI	OFF	Data lines disconnected.
0	1	1	1	DCP_Auto	ILIM_HI	DCP load present(3)	Data lines disconnected and load detect function active.
1	0	0	0	DCP _Shorted	ILIM_LO	OFF	Device forced to stay in DCP BC1.2 charging mode.
1	0	0	1	DCP_Shorted	ILIM_HI	OFF	
1	0	1	0	DCP / Divider1	ILIM_LO	OFF	Device forced to stay in DCP divider1 charging mode.
1	0	1	1	DCP / Divider1	ILIM_HI	OFF	
1	1	0	0	SDP1	ILIM_LO	OFF	Data lines connected.
1	1	0	1	SDP1	ILIM_HI	OFF	
1	1	1	0	SDP2(4)	ILIM_LO	OFF	
1	1	1	1	CDP(4)	ILIM_HI	CDP load present(5)	Data lines connected and load detect active.

(1) TPS2547 : Current limit (I_{OS}) is automatically switched between I_{OS_PW} and the value set by ILIM_HI according to the Load Detect – Power Wake functionality.
(2) DCP Load present governed by the Load Detection – Power Wake limits.
(3) DCP Load present governed by the Load Detection – Non Power Wake limits.
(4) No OUT discharge when changing between 1111 and 1110.
(5) CDP Load present governed by the Load Detection – Non Power Wake limits and BC1.2 primary detection.

Copyright © 2017, Texas Instruments Incorporated

9 Application and Implementation

NOTE

Information in the following applications sections is not part of the TI component specification, and TI does not warrant its accuracy or completeness. TI's customers are responsible for determining suitability of components for their purposes. Customers must validate and test their design implementation to confirm system functionality.

9.1 Application Information

Power-on-reset (POR) holds device in initial state while output is held in discharge mode. Any POR event returns the device to initial state. After POR clears, device goes to the next state depending on the CTL lines as shown in Figure 38.

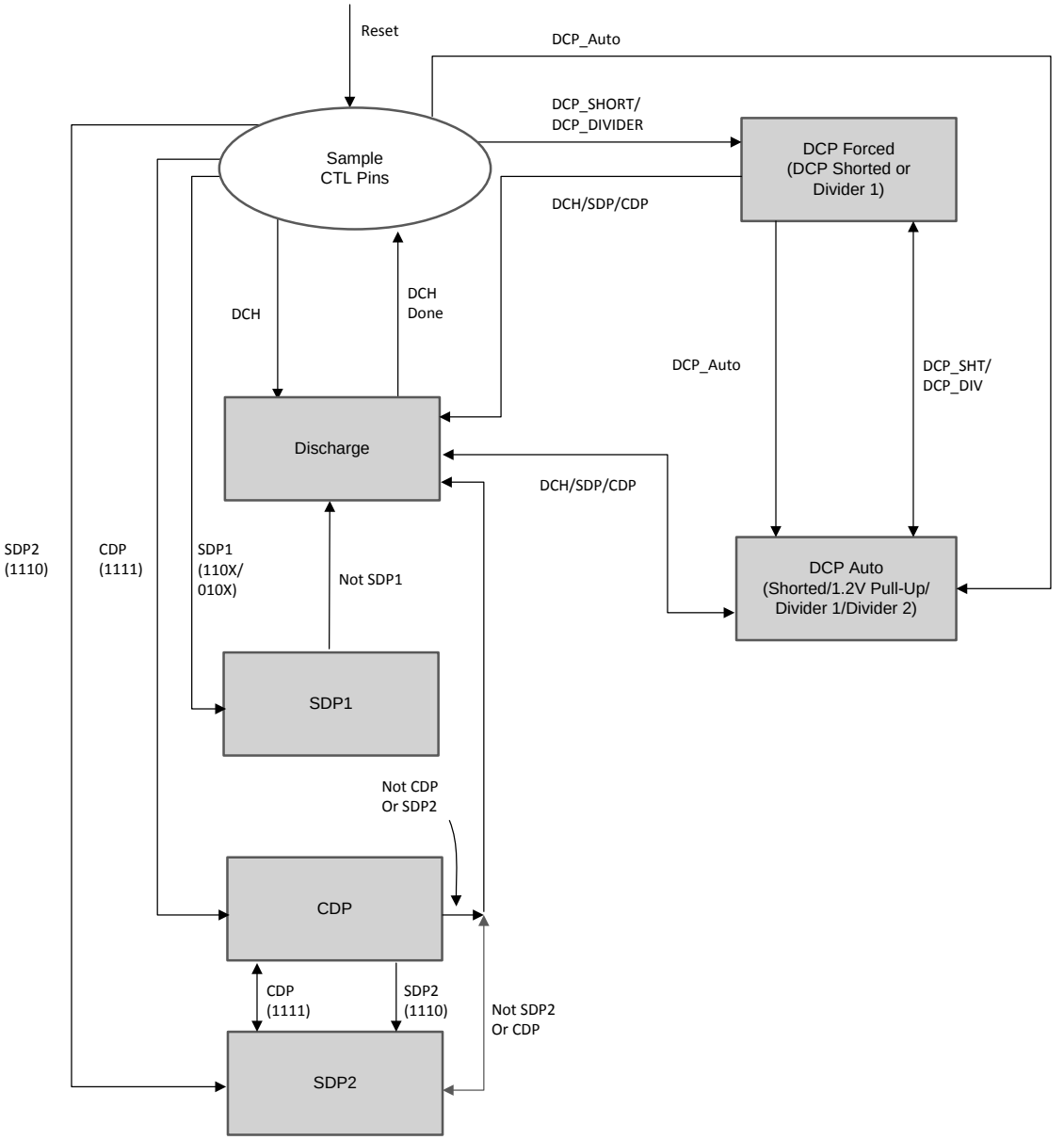

Copyright © 2016, Texas Instruments Incorporated

Figure 38. TPS2547 Charging States

Application Information (continued)

9.1.1 Output Discharge

To allow a charging port to renegotiate current with a portable device, the TPS2547 device uses the OUT discharge function. The device proceeds by turning off the power switch while discharging OUT. The device then turns on the power switch again to reassert the OUT voltage. This discharge function is automatically applied, as shown in Figure 26. There are two discharge times, t_{DCHG_L} and t_{DCHG_S}. t_{DCHG_L} is from SDP1/SDP2/CDP to DCP_Auto, and t_{DCHG_S} is from DCP_Auto to SDP1/SDP2/CDP.

9.2 Typical Application

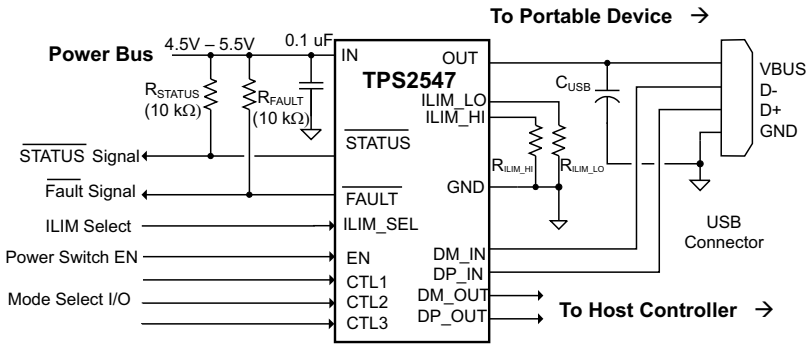

Copyright © 2017, Texas Instruments Incorporated

Figure 39. Typical Application Schematic USB Port Charging

9.2.1 Design Requirements

For this design example, use the parameters listed in Table 4.

Table 4. Design Parameters

DESIGN PARAMETER	EXAMPLE VALUE
Input voltage, $V_{(IN)}$	5 V
Output voltage, $V_{(DC)}$	5 V
Maximum continuous output current, $I_{(OUT)}$	2.5 A
Current limit, $I_{(LIM_LO)}$ at R_{ILIM_LO} = 80.6 kΩ	0.625 A
Current Limit, $I_{(LIM_HI)}$ at R_{ILIM_HI} = 16.9 kΩ	2.97 A

9.2.2 Detailed Design Procedure

9.2.2.1 Current-Limit Settings

The TPS2547 has two independent current limit settings that are each programmed externally with a resistor. The ILIM_HI setting is programmed with R_{ILIM_HI} connected between ILIM_HI and GND. The ILIM_LO setting is programmed with R_{ILIM_LO} connected between ILIM_LO and GND. Consult the Device Truth Table (Table 3) to see when each current limit is used. Both settings have the same relation between the current limit and the programming resistor.

R_{ILIM_LO} is optional and the ILIM_LO pin may be left unconnected if the following conditions are met:

1. ILIM_SEL is always set high
2. Load Detection - Port Power Management is not used

Equation 1 programs the typical current limit:

$$R_{LIM_XX}(k\Omega) = \frac{51829}{I_{OS_typ}(mA)} \quad (1)$$

R_{ILIM_XX} corresponds to either R_{ILIM_HI} or R_{ILIM_LO} as appropriate.

Copyright © 2017, Texas Instruments Incorporated

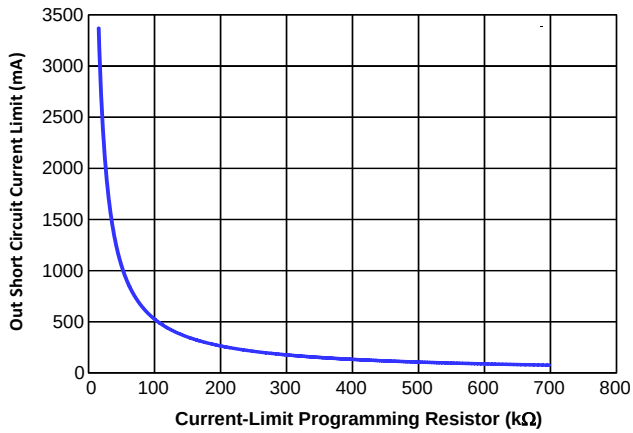

Full R_{ILIM_XX} Range

Figure 40. Typical Current Limit Setting vs Programming Resistor

Many applications require that the current limit meet specific tolerance limits. When designing to these tolerance limits, both the tolerance of the TPS2547 current limit and the tolerance of the external programming resistor must be taken into account. The following equations approximate the TPS2547 minimum and maximum current limits to within a few mA, and are appropriate for design purposes. The equations do not constitute part of Texas Instrument's published device specifications for purposes of Texas Instrument's product warranty. These equations assume an ideal - no variation - external programming resistor. To take resistor tolerance into account, first determine the minimum and maximum resistor values based on its tolerance specifications, and use these values in the equations. Because of the inverse relation between the current limit and the programming resistor, use the maximum resistor value in the Equation 2 and the minimum resistor value in the Equation 3.

$$I_{OS_min}(mA) = \frac{52069}{R_{LIM_XX}^{(1.023)}(k\Omega)} \quad (2)$$

$$I_{OS_max}(mA) = \frac{52090}{R_{LIM_XX}^{(0.978)}(k\Omega)} \quad (3)$$

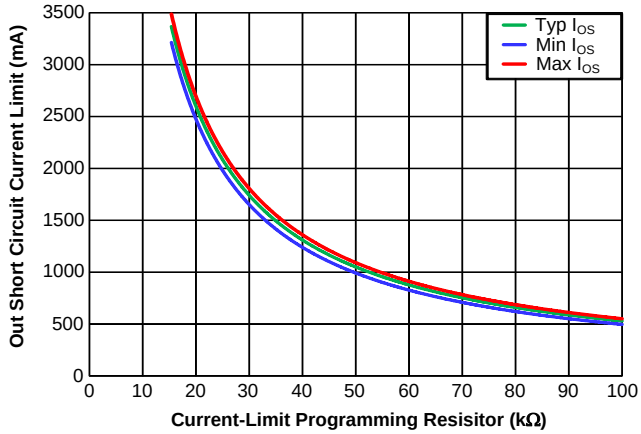

Figure 41. Current Limit Setting vs Programming Resistor

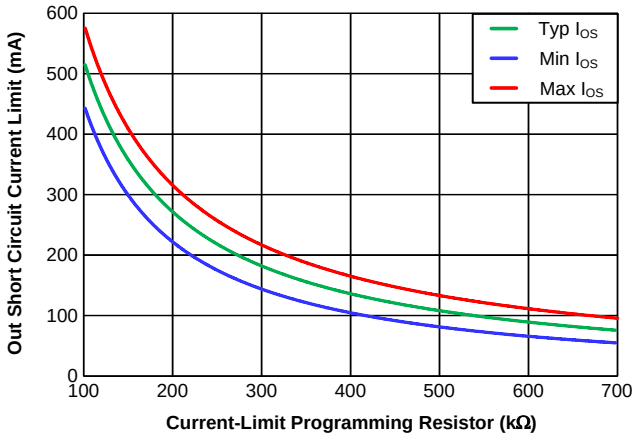

Figure 42. Current Limit Setting vs Programming Resistor

The traces routing the R_{ILIM_XX} resistors must be a sufficiently low resistance as to not affect the current-limit accuracy. The ground connection for the R_{ILIM_XX} resistors is also very important. The resistors need to reference back to the TPS2547 GND pin. Follow normal board layout practices to ensure that current flow from other parts of the board does not impact the ground potential between the resistors and the TPS2547 GND pin.

Copyright © 2017, Texas Instruments Incorporated

9.2.3 Application Curves

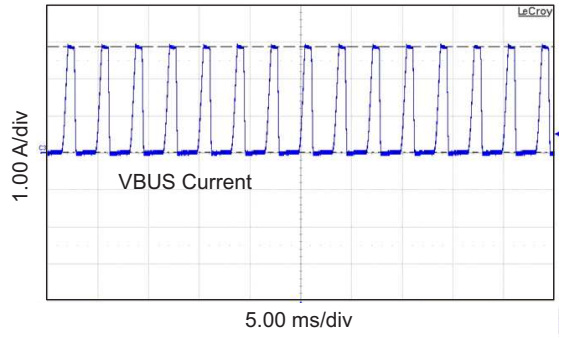

Figure 43. High-Current Limit

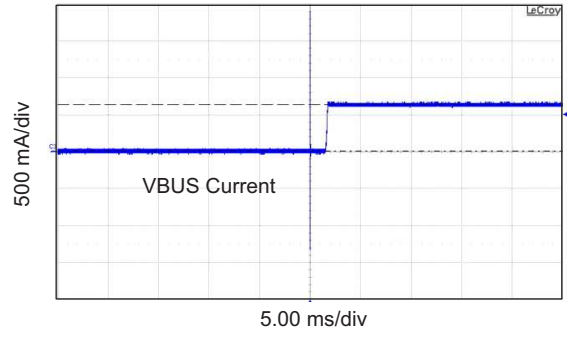

Figure 44. Low-Current Limit

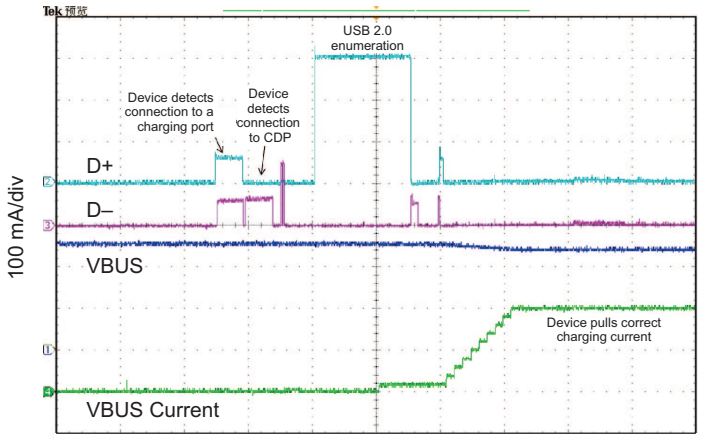

D+ – 1.00 V/div
D– – 1.00 V/div
VBUS – 2.00 V/div
VBUS Current – 500 mA/div

Figure 45. Charging iPhone 5s with TPS2547 CDP (CTL1 = CTL2 = CTL3 = ILIM_SEL = 1)

10 Power Supply Recommendations

The TPS2547 device is designed for a supply-voltage range of 4.5 V ≤ VIN ≤ 5.5 V. If the input supply is located more than a few inches from the device, an input ceramic bypass capacitor higher than 0.1 µF is recommended. In order to avoid drops in voltage during overcurrent and short-circuit conditions, choose a power supply rated higher than the TPS2547 current-limit setting.

11 Layout

11.1 Layout Guidelines

For the trace routing of DP_IN, DM_IN, DP_OUT, and DM_OUT: route these traces as micro-strips with nominal differential impedance of 90 Ω. Minimize the use of vias in the high-speed data lines. Keep the reference GND plane devoid from cuts or splits above the differential pairs to prevent impedance discontinuities. For more information, see the *High-Speed USB Platform Design Guidelines* from Intel.

The trace routing from the upstream regulator to the TPS2547 IN pin must be as short as possible to reduce voltage drop and parasitic inductance.

Copyright © 2017, Texas Instruments Incorporated

Layout Guidelines (continued)

In order to meet IEC61000-4-2 level 4 ESD, external circuitry is required. Refer to the guidelines provided in the *関連資料* section.

The traces routing from the RILIM_HI and RILIM_LO resistors to the device must be as short as possible to reduce parasitic effects on the current-limit accuracy.

The thermal pad must be directly connected to the PCB ground plane using wide and short copper trace.

11.2 Layout Example

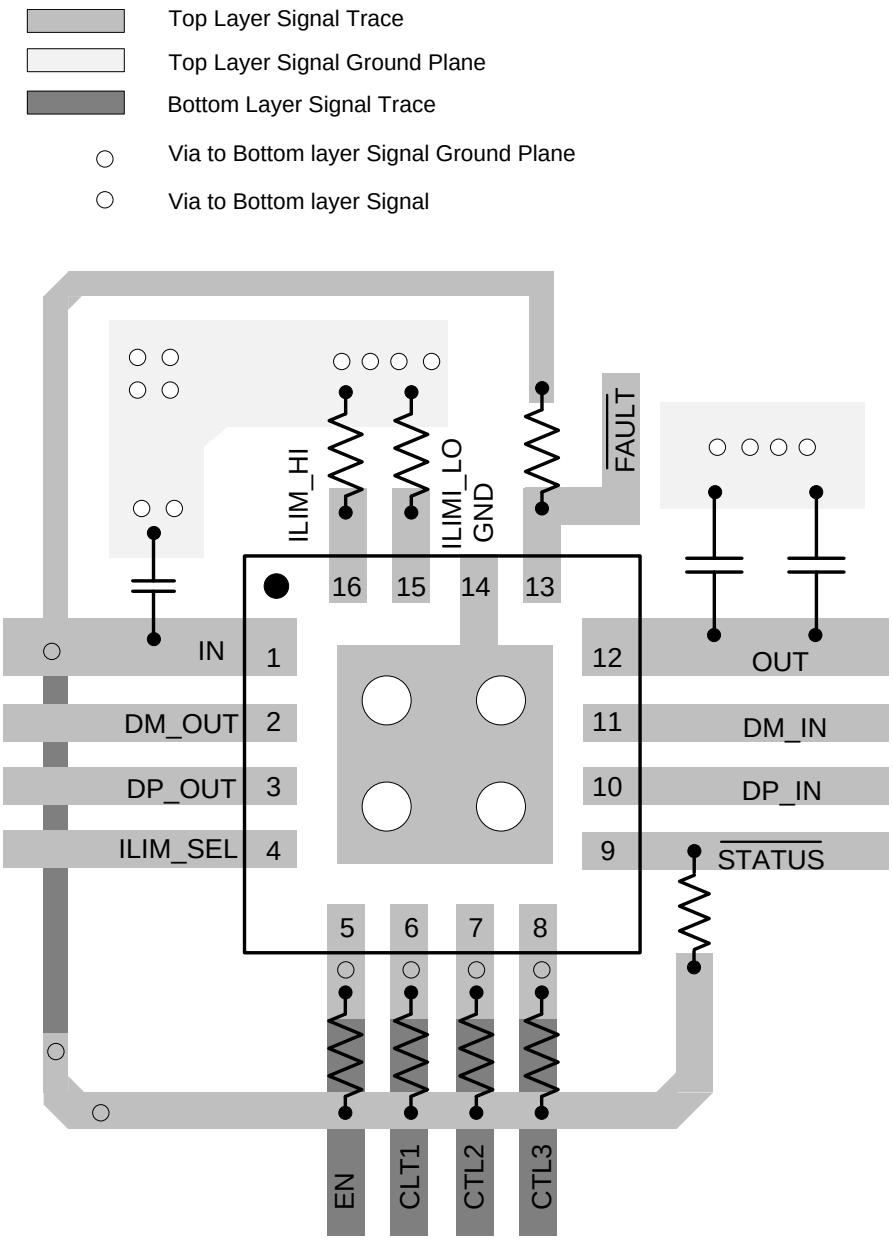

Figure 46. Layout Recommendation

12 デバイスおよびドキュメントのサポート

12.1 ドキュメントのサポート

12.1.1 関連資料

関連資料については、以下を参照してください。

『TPS254x USB充電ポート・コントローラでの効果的なシステムESD保護』、SLVA796

『高速USBプラットフォームの設計ガイドライン、インテル』(www.usb.org/developers/docs/hs_usb_pdg_r1_0.pdf)

『USB 2.0仕様』(www.usb.org/developers/docs/usb20_docs/#usb20spec)

『BC1.2 バッテリ充電仕様』(kinetis.pl/sites/default/files/BC1.2_FINAL.pdf)

12.2 ドキュメントの更新通知を受け取る方法

ドキュメントの更新についての通知を受け取るには、ti.comのデバイス製品フォルダを開いてください。右上の隅にある「*通知を受け取る*」をクリックして登録すると、変更されたすべての製品情報に関するダイジェストを毎週受け取れます。変更の詳細については、修正されたドキュメントに含まれている改訂履歴をご覧ください。

12.3 コミュニティ・リソース

The following links connect to TI community resources. Linked contents are provided "AS IS" by the respective contributors. They do not constitute TI specifications and do not necessarily reflect TI's views; see TI's Terms of Use.

TI E2E™オンライン・コミュニティ ***TIのE2E（Engineer-to-Engineer）コミュニティ。***エンジニア間の共同作業を促進するために開設されたものです。e2e.ti.comでは、他のエンジニアに質問し、知識を共有し、アイディアを検討して、問題解決に役立てることができます。

設計サポート ***TIの設計サポート*** 役に立つE2Eフォーラムや、設計サポート・ツールをすばやく見つけることができます。技術サポート用の連絡先情報も参照できます。

12.4 商標

E2E is a trademark of Texas Instruments.
All other trademarks are the property of their respective owners.

12.5 静電気放電に関する注意事項

これらのデバイスは、限定的なESD（静電破壊）保護機能を内 蔵しています。保存時または取り扱い時は、MOSゲートに対す る静電破壊を防止するために、リード線同士をショートさせて おくか、デバイスを導電フォームに入れる必要があります。

12.6 Glossary

SLYZ022 — *TI Glossary*.

This glossary lists and explains terms, acronyms, and definitions.

13 メカニカル、パッケージ、および注文情報

以降のページには、メカニカル、パッケージ、および注文に関する情報が記載されています。この情報は、そのデバイスについて利用可能な最新のデータです。このデータは予告なく変更されることがあり、ドキュメントが改訂される場合もあります。本データシートのブラウザ版を使用されている場合は、画面左側の説明をご覧ください。

Copyright © 2017, Texas Instruments Incorporated

PACKAGING INFORMATION

Orderable part number	Status (1)	Material type (2)	Package | Pins	Package qty | Carrier	RoHS (3)	Lead finish/ Ball material (4)	MSL rating/ Peak reflow (5)	Op temp (°C)	Part marking (6)
TPS2547RTER	Active	Production	WQFN (RTE) | 16	3000 | LARGE T&R	Yes	NIPDAU	Level-1-260C-UNLIM	-40 to 115	2547
TPS2547RTER.A	Active	Production	WQFN (RTE) | 16	3000 | LARGE T&R	Yes	NIPDAU	Level-1-260C-UNLIM	-40 to 115	2547
TPS2547RTERG4	Active	Production	WQFN (RTE) | 16	3000 | LARGE T&R	Yes	NIPDAU	Level-1-260C-UNLIM	-40 to 115	2547
TPS2547RTERG4.A	Active	Production	WQFN (RTE) | 16	3000 | LARGE T&R	Yes	NIPDAU	Level-1-260C-UNLIM	-40 to 115	2547
TPS2547RTET	Active	Production	WQFN (RTE) | 16	250 | SMALL T&R	Yes	NIPDAU	Level-1-260C-UNLIM	-40 to 115	2547
TPS2547RTET.A	Active	Production	WQFN (RTE) | 16	250 | SMALL T&R	Yes	NIPDAU	Level-1-260C-UNLIM	-40 to 115	2547

(1) **Status:** For more details on status, see our product life cycle.

(2) **Material type:** When designated, preproduction parts are prototypes/experimental devices, and are not yet approved or released for full production. Testing and final process, including without limitation quality assurance, reliability performance testing, and/or process qualification, may not yet be complete, and this item is subject to further changes or possible discontinuation. If available for ordering, purchases will be subject to an additional waiver at checkout, and are intended for early internal evaluation purposes only. These items are sold without warranties of any kind.

(3) **RoHS values:** Yes, No, RoHS Exempt. See the TI RoHS Statement for additional information and value definition.

(4) **Lead finish/Ball material:** Parts may have multiple material finish options. Finish options are separated by a vertical ruled line. Lead finish/Ball material values may wrap to two lines if the finish value exceeds the maximum column width.

(5) **MSL rating/Peak reflow:** The moisture sensitivity level ratings and peak solder (reflow) temperatures. In the event that a part has multiple moisture sensitivity ratings, only the lowest level per JEDEC standards is shown. Refer to the shipping label for the actual reflow temperature that will be used to mount the part to the printed circuit board.

(6) **Part marking:** There may be an additional marking, which relates to the logo, the lot trace code information, or the environmental category of the part.

Multiple part markings will be inside parentheses. Only one part marking contained in parentheses and separated by a "~" will appear on a part. If a line is indented then it is a continuation of the previous line and the two combined represent the entire part marking for that device.

Important Information and Disclaimer: The information provided on this page represents TI's knowledge and belief as of the date that it is provided. TI bases its knowledge and belief on information provided by third parties, and makes no representation or warranty as to the accuracy of such information. Efforts are underway to better integrate information from third parties. TI has taken and continues to take reasonable steps to provide representative and accurate information but may not have conducted destructive testing or chemical analysis on incoming materials and chemicals. TI and TI suppliers consider certain information to be proprietary, and thus CAS numbers and other limited information may not be available for release.

In no event shall TI's liability arising out of such information exceed the total purchase price of the TI part(s) at issue in this document sold by TI to Customer on an annual basis.

TAPE AND REEL INFORMATION

REEL DIMENSIONS

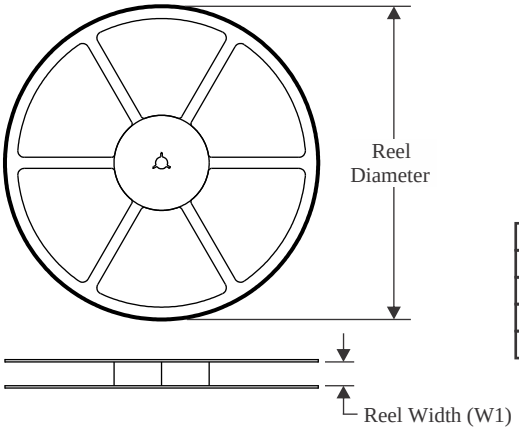

TAPE DIMENSIONS

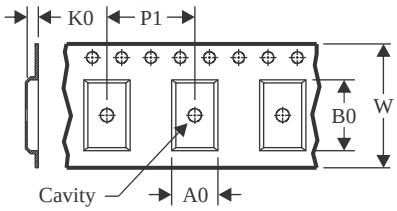

A0	Dimension designed to accommodate the component width
B0	Dimension designed to accommodate the component length
K0	Dimension designed to accommodate the component thickness
W	Overall width of the carrier tape
P1	Pitch between successive cavity centers

QUADRANT ASSIGNMENTS FOR PIN 1 ORIENTATION IN TAPE

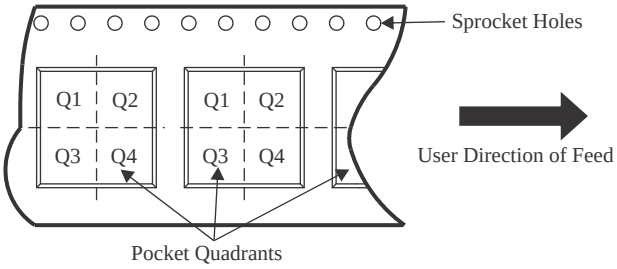

*All dimensions are nominal

Device	Package Type	Package Drawing	Pins	SPQ	Reel Diameter (mm)	Reel Width W1 (mm)	A0 (mm)	B0 (mm)	K0 (mm)	P1 (mm)	W (mm)	Pin1 Quadrant
TPS2547RTER	WQFN	RTE	16	3000	330.0	12.4	3.3	3.3	1.1	8.0	12.0	Q2
TPS2547RTERG4	WQFN	RTE	16	3000	330.0	12.4	3.3	3.3	1.1	8.0	12.0	Q2
TPS2547RTET	WQFN	RTE	16	250	180.0	12.4	3.3	3.3	1.1	8.0	12.0	Q2

TAPE AND REEL BOX DIMENSIONS

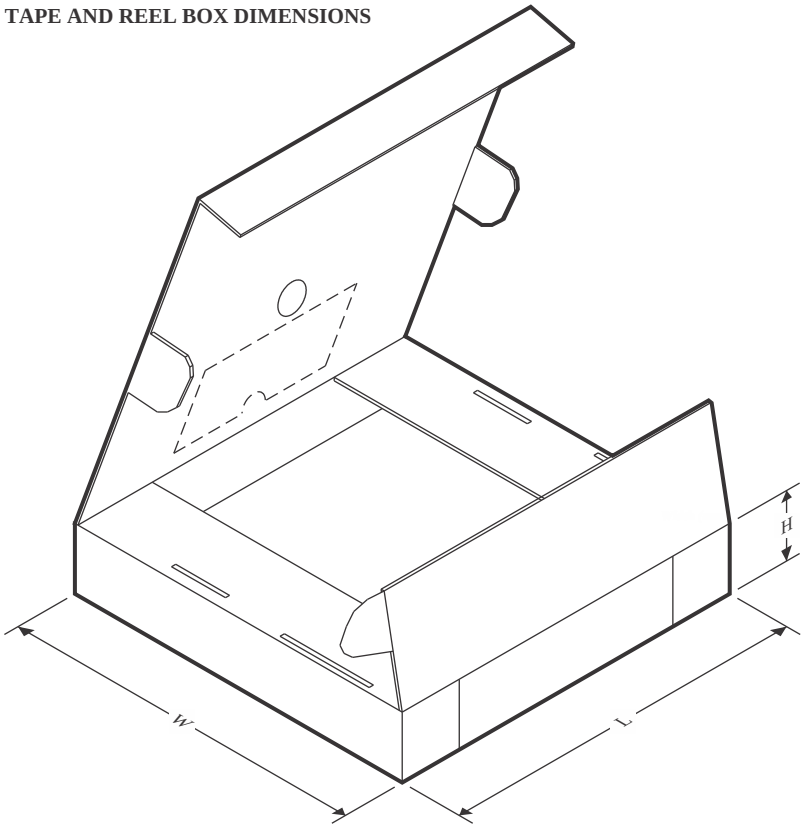

*All dimensions are nominal

Device	Package Type	Package Drawing	Pins	SPQ	Length (mm)	Width (mm)	Height (mm)
TPS2547RTER	WQFN	RTE	16	3000	360.0	360.0	36.0
TPS2547RTERG4	WQFN	RTE	16	3000	367.0	367.0	35.0
TPS2547RTET	WQFN	RTE	16	250	210.0	185.0	35.0

GENERIC PACKAGE VIEW

RTE 16

WQFN - 0.8 mm max height

3 x 3, 0.5 mm pitch

PLASTIC QUAD FLATPACK - NO LEAD

This image is a representation of the package family, actual package may vary.
Refer to the product data sheet for package details.

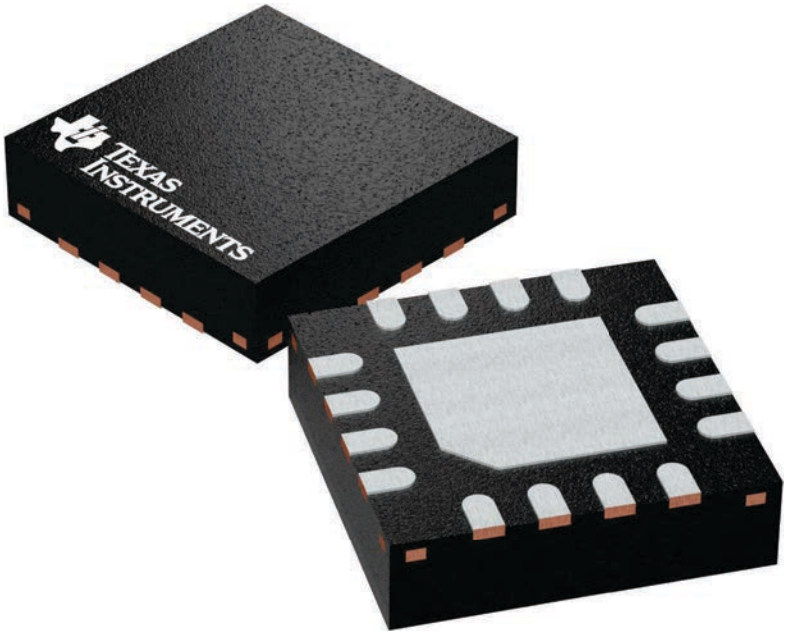

4225944/A

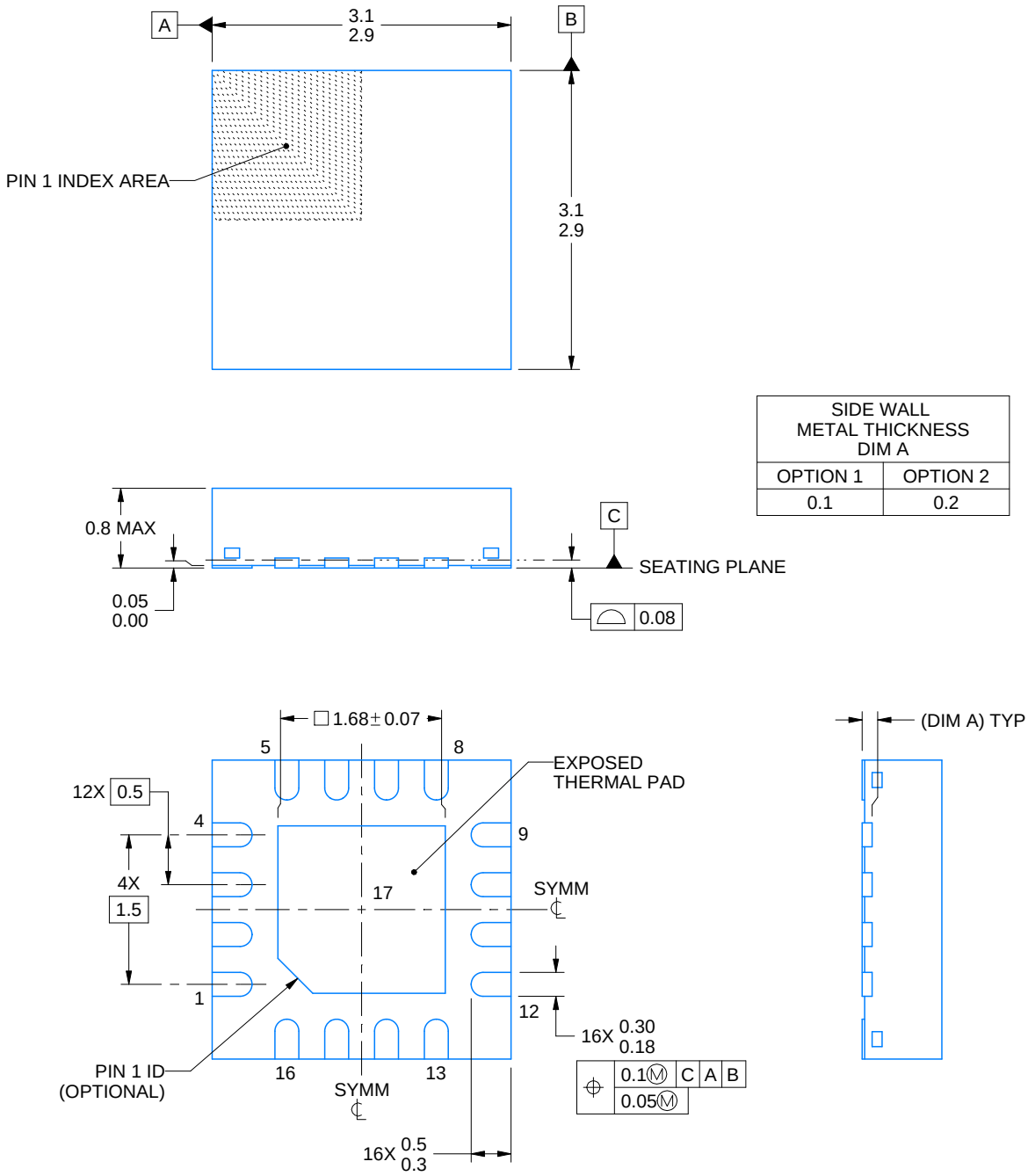

SIDE WALL METAL THICKNESS DIM A	
OPTION 1	OPTION 2
0.1	0.2

NOTES:

1. All linear dimensions are in millimeters. Any dimensions in parenthesis are for reference only. Dimensioning and tolerancing per ASME Y14.5M.
2. This drawing is subject to change without notice.
3. The package thermal pad must be soldered to the printed circuit board for thermal and mechanical performance.

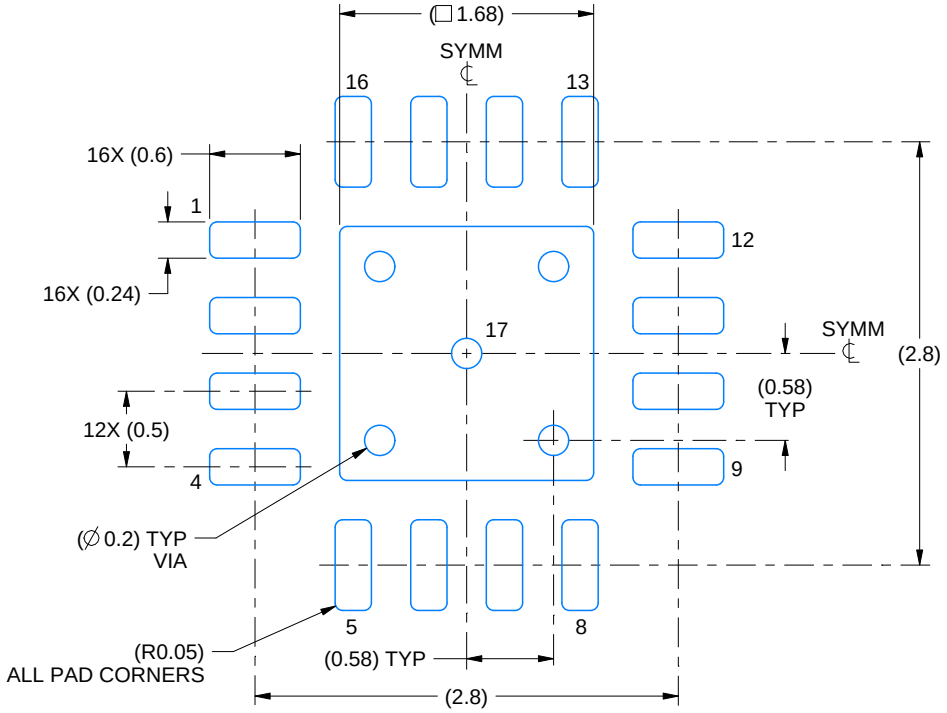

LAND PATTERN EXAMPLE
EXPOSED METAL SHOWN
SCALE:20X

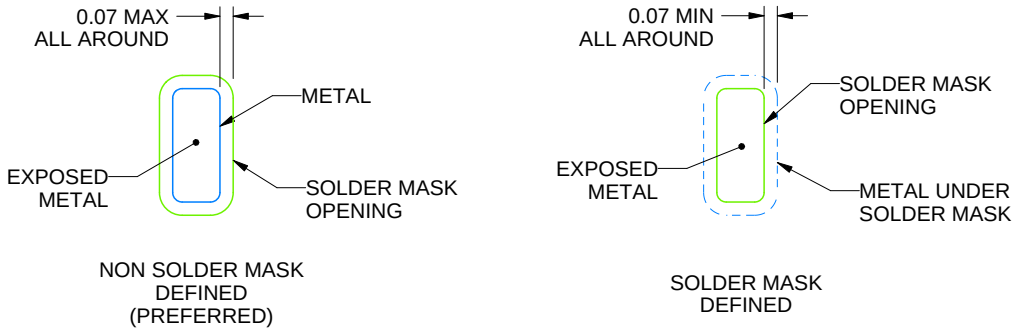

SOLDER MASK DETAILS

4219117/B 04/2022

NOTES: (continued)

4. This package is designed to be soldered to a thermal pad on the board. For more information, see Texas Instruments literature number SLUA271 (www.ti.com/lit/slua271).
5. Vias are optional depending on application, refer to device data sheet. If any vias are implemented, refer to their locations shown on this view. It is recommended that vias under paste be filled, plugged or tented.

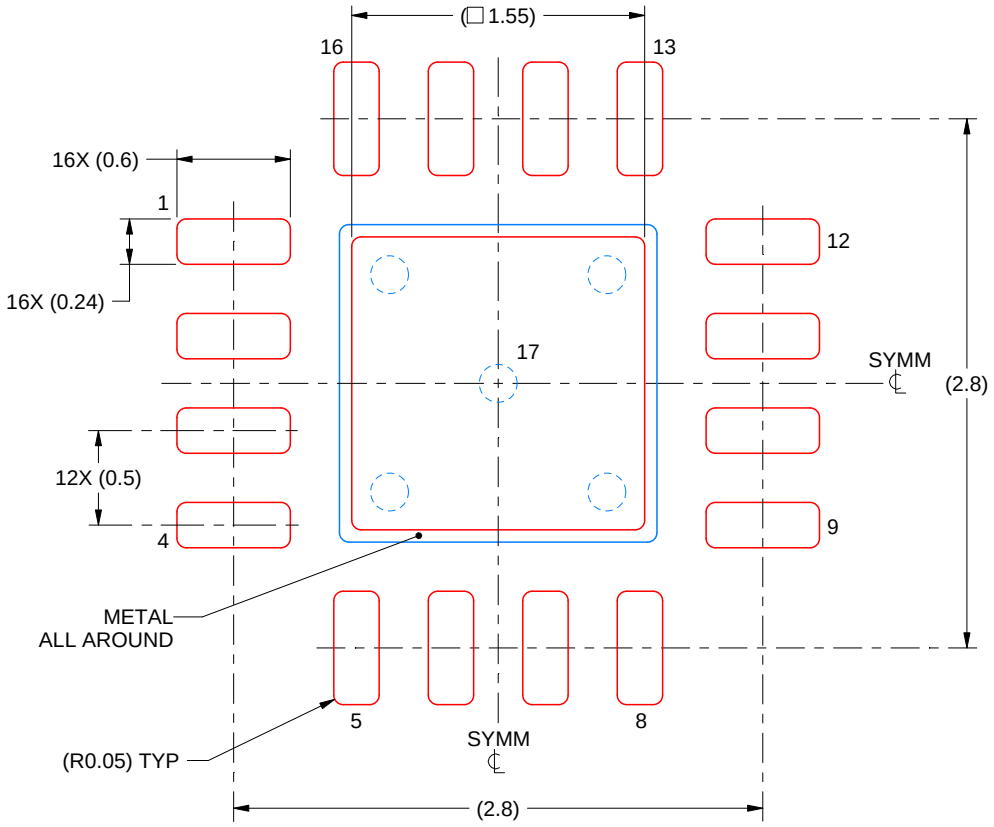

SOLDER PASTE EXAMPLE
BASED ON 0.125 mm THICK STENCIL

EXPOSED PAD 17:
85% PRINTED SOLDER COVERAGE BY AREA UNDER PACKAGE
SCALE:25X

4219117/B 04/2022

NOTES: (continued)

6. Laser cutting apertures with trapezoidal walls and rounded corners may offer better paste release. IPC-7525 may have alternate design recommendations.

重要なお知らせと免責事項

TI は、技術データと信頼性データ (データシートを含みます)、設計リソース (リファレンス デザインを含みます)、アプリケーションや設計に関する各種アドバイス、Web ツール、安全性情報、その他のリソースを、欠陥が存在する可能性のある「現状のまま」提供しており、商品性および特定目的に対する適合性の黙示保証、第三者の知的財産権の非侵害保証を含むいかなる保証も、明示的または黙示的にかかわらず拒否します。

これらのリソースは、TI 製品を使用する設計の経験を積んだ開発者への提供を意図したものです。(1) お客様のアプリケーションに適した TI 製品の選定、(2) お客様のアプリケーションの設計、検証、試験、(3) お客様のアプリケーションに該当する各種規格や、その他のあらゆる安全性、セキュリティ、規制、または他の要件への確実な適合に関する責任を、お客様のみが単独で負うものとします。

上記の各種リソースは、予告なく変更される可能性があります。これらのリソースは、リソースで説明されている TI 製品を使用するアプリケーションの開発の目的でのみ、TI はその使用をお客様に許諾します。これらのリソースに関して、他の目的で複製することや掲載することは禁止されています。TI や第三者の知的財産権のライセンスが付与されている訳ではありません。お客様は、これらのリソースを自身で使用した結果発生するあらゆる申し立て、損害、費用、損失、責任について、TI およびその代理人を完全に補償するものとし、TI は一切の責任を拒否します。

TI の製品は、 TI の販売条件 、 TI の総合的な品質ガイドライン 、 ti.com または TI 製品などに関連して提供される他の適用条件に従い提供されます。TI がこれらのリソースを提供することは、適用される TI の保証または他の保証の放棄の拡大や変更を意味するものではありません。 TI がカスタム、またはカスタマー仕様として明示的に指定していない限り、TI の製品は標準的なカタログに掲載される汎用機器です。

お客様がいかなる追加条項または代替条項を提案する場合も、TI はそれらに異議を唱え、拒否します。

Copyright © 2026, Texas Instruments Incorporated

最終更新日：2025 年 10 月