TPS3762 65V ウィンドウ (OV および UV) スーパーバイザ、セルフ テストおよびラッチ機能内蔵

1 特長

- SIL-3 機能安全準拠製品向け
  - IEC 61508 システムの設計に役立つ資料
  - SIL-3 までの決定論的対応能力に対応予定
  - SIL-3 までのハードウェア対応能力に対応予定
- 設計要件を満たすデバイスの柔軟性
  - 幅広い電圧スレッショルド範囲:2.7V～60V
  - 800mV オプション - スレッショルドを設定するには、外付け分割抵抗と併用
  - ヒステリシス内蔵 (2%、5%、10% のオプション)
  - 固定またはプログラム可能なリセット時間遅延
  - 固定およびプログラム可能な検出遅延
- 高電圧電源レールを監視
  - 幅広い入力電圧範囲:2.7V～65V
  - センス・ピン -65V の逆極性保護
  - 高電圧レールの電源オフに外付け部品が不要
- 12/24/48V システムでの高速 UV/OV 保護
  - 出力リセット・ラッチ機能
  - 超高速検出時間遅延オプション (5μs 未満)
  - 内蔵セルフ・テスト

2 アプリケーション

- 単軸と多軸のサーボ・ドライブ
- 産業用ロボット / 協力ロボット
- 航空
- PLC、DCS、PAC

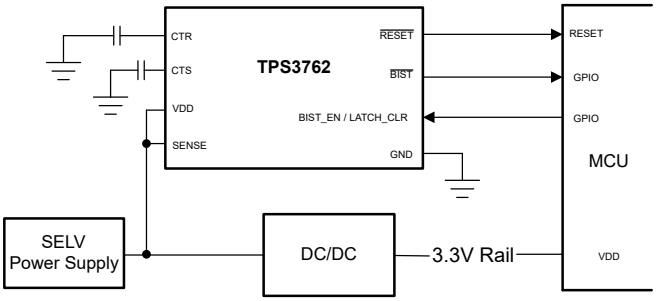

代表的なアプリケーション回路

3 概要

TPS3762 は、4μA I_{DD}、精度 0.9%、高速検出時間、内蔵セルフテスト機能を備えた 65V 入力電圧スーパーバイザです。このデバイスは 12V/24V 産業用 SELV 電源レールに直接接続し、過電圧 (OV) および低電圧 (UV) 状態を継続的に監視できます。また、分割抵抗を内蔵しているため、TPS3762 はソリューション全体のサイズを最小化できます。大きな電圧過渡の影響を受けないように、幅広いヒステリシス電圧オプションを選択できます。SENSE ピンに組み込まれたヒステリシスは、電源電圧レール監視中のリセット信号の誤検出を防止します。

VDD ピンと SENSE ピンが独立しているため、信頼性が高いシステムが求める冗長性を実現できます。また、SENSE は VDD よりも高い電圧と低い電圧を監視できます。SENSE ピンは高インピーダンス入力なので外付け抵抗を使うこともできます。CTS ピンおよび CTR ピンを使うことで、RESET 信号の立ち下がり / 立ち上がりエッジの遅延を調整できます。CTS は、監視対象の電圧レールの電圧グリッチを無視することで、デバウンシング機能として機能します。

TPS3762 は、2.9mm × 1.6mm の SOT23 8 ピン・パッケージで供給されます。 TPS3762 –40°C～+150°C の T_A で動作します。

製品情報

部品番号	パッケージ (1)	本体サイズ (公称)
TPS3762	SOT-23 (8) (DDF)	2.9mm × 1.6mm

(1) パッケージの詳細については、このデータシートの末尾の外形図を参照してください。

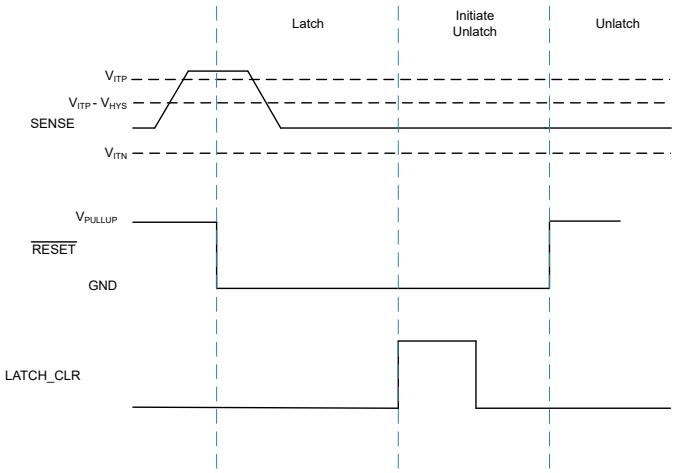

ラッチ機能の波形

このリソースの元の言語は英語です。翻訳は概要を便宜的に提供するもので、自動化ツール (機械翻訳) を使用していることがあり、TI では翻訳の正確性および妥当性につきましては一切保証いたしません。実際の設計などの前には、ti.com で必ず最新の英語版をご参照くださいますようお願いいたします。

Table of Contents

1 特長 ... 1
2 アプリケーション ... 1
3 概要 ... 1
4 Device Comparison ... 3
5 Pin Configuration and Functions ... 4
6 Specifications ... 5
6.1 Specifications ... 5
6.2 Absolute Maximum Ratings ... 5
6.3 Recommended Operating Conditions ... 5
6.4 Thermal Information ... 5
6.5 Electrical Characteristics ... 6
6.6 Switching Requirements ... 8
6.7 Timing Requirements ... 9
6.8 Timing Diagrams ... 10
6.9 Typical Characteristic ... 12
7 Detailed Description ... 14
7.1 Overview ... 14
7.2 Functional Block Diagram ... 14
7.3 Feature Description ... 16
7.4 Device Functional Modes ... 27
8 Application and Implementation ... 28
8.1 Application Information ... 28
8.2 Adjustable Voltage Thresholds ... 28
8.3 Typical Application ... 29
8.4 Power Supply Recommendations ... 33
8.5 Layout ... 33
9 Device and Documentation Support ... 35
9.1 Device Nomenclature ... 35
9.2 ドキュメントの更新通知を受け取る方法 ... 35
9.3 サポート・リソース ... 35
9.4 Trademarks ... 35
9.5 静電気放電に関する注意事項 ... 35
9.6 用語集 ... 35
10 Revision History ... 35
11 Mechanical, Packaging, and Orderable Information ... 35

Copyright © 2024 Texas Instruments Incorporated

4 Device Comparison

Device Decoder shows some of the device naming nomenclature of the TPS3762. Not all device namings will follow this nomenclature table. For a detailed breakdown of every device part number by threshold voltage options, BIST configurations, Latch configurations, CTR options, CTS options, and UVbypass, see セクション 9.1 for more details. Contact TI sales representatives or on TI's E2E forum for detail and availability of other options.

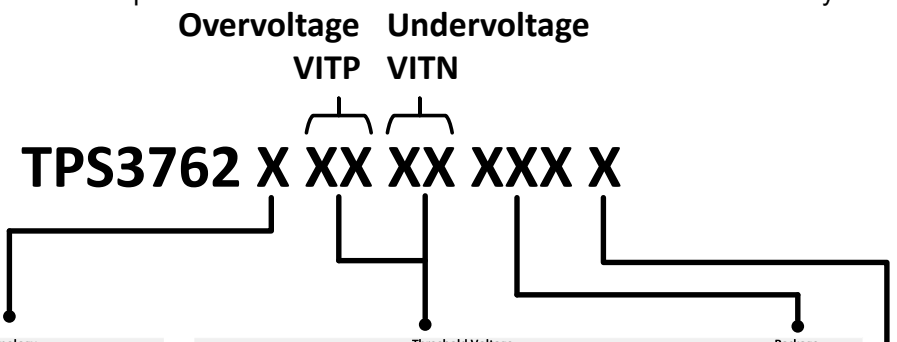

Topology

Suffix	CTR	CTS	Latch / UV Bypass	BIST RESET Trigger
A	ADJ	ADJ	Disabled	Yes
B	ADJ	ADJ	Latch	Yes
C	ADJ	ADJ	UVBypass	Yes
D	ADJ	ADJ	Both	Yes
E	ADJ	5 µs	Disabled	Yes
F	ADJ	5 µs	Latch	Yes
G	ADJ	5 µs	UVBypass	Yes
H	ADJ	5 µs	Both	Yes
I	ADJ	ADJ	Disabled	No
J	ADJ	ADJ	Latch	No
K	ADJ	ADJ	UVBypass	No
L	ADJ	ADJ	Both	No
M	ADJ	5 µs	Disabled	No
N	ADJ	5 µs	Latch	No
O	ADJ	5 µs	UVBypass	No
P	ADJ	5 µs	Both	No
Q	200ms	5 µs	Disabled	Yes
R	200ms	5 µs	Latch	Yes

Threshold Voltage

2% Hysteresis Option

Suffix	VIT	Suffix	VIT
02	800mV	D7	8.5V
A7	2.7V	D8	9V
A8	2.8V	D9	9.5V
A9	2.9V	E0	10V
B0	3V	E1	11V
B1	3.1V	E2	12V
B2	3.2V	E3	13V
B3	3.3V	E4	14V
B4	3.4V	E5	15V
B5	3.5V	E6	16V
B6	3.6V	E7	17V
B7	3.7V	E8	18V
B8	3.8V	E9	20V
B9	3.9V	F0	22V
C0	4V	F1	24V
C1	4.1V	F2	26V
C2	4.2V	F3	28V
C3	4.3V	F4	30V
C4	4.4V	F5	32V
C5	4.5V	F6	34V
C6	4.6V	F7	36V
C7	4.7V	F8	38V
C8	4.8V	F9	40V
C9	4.9V	G0	42V
D0	5V	G1	46V
D1	5.5V	G2	48V
D2	6V	G3	50V
D3	6.5V	G4	54V
D4	7V	G5	57V
D5	7.5V	G6	58V
D6	8V	G7	60V
W7	+/-7%		
UV	UV Only	OV	OV Only

5% Hysteresis Option

Suffix	VIT	Suffix	VIT
05	800mV	K7	8.5V
H7	2.7V	K8	9V
H8	2.8V	K9	9.5V
H9	2.9V	L0	10V
I0	3V	L1	11V
I1	3.1V	L2	12V
I2	3.2V	L3	13V
I3	3.3V	L4	14V
I4	3.4V	L5	15V
I5	3.5V	L6	16V
I6	3.6V	L7	17V
I7	3.7V	L8	18V
I8	3.8V	L9	20V
I9	3.9V	M0	22V
J0	4V	M1	24V
J1	4.1V	M2	26V
J2	4.2V	M3	28V
J3	4.3V	M4	30V
J4	4.4V	M5	32V
J5	4.5V	M6	34V
J6	4.6V	M7	36V
J7	4.7V	M8	38V
J8	4.8V	M9	40V
J9	4.9V	N0	42V
K0	5V	N1	46V
K1	5.5V	N2	48V
K2	6V	N3	50V
K3	6.5V	N4	54V
K4	7V	N5	57V
K5	7.5V	N6	58V
K6	8V	N7	60V

10% Hysteresis Option

Suffix	VIT	Suffix	VIT
10	800mV	Q1	4.1V
O7	2.7V	Q2	4.2V
O8	2.8V	Q3	4.3V
O9	2.9V	Q4	4.4V
P0	3V	Q5	4.5V
P1	3.1V	Q6	4.6V
P2	3.2V	Q7	4.7V
P3	3.3V	Q8	4.8V
P4	3.4V	Q9	4.9V
P5	3.5V	R0	5V
P6	3.6V	R1	5.5V
P7	3.7V	R2	6V
P8	3.8V	R3	6.5V
P9	3.9V	R4	7V
Q0	4V	R5	7.5V

10% Hysteresis Option

Suffix	VIT	Suffix	VIT
R6	8V	T2	26V
R7	8.5V	T3	28V
R8	9V	T4	30V
R9	9.5V	T5	32V
S0	10V	T6	34V
S1	11V	T7	36V
S2	12V	T8	38V
S3	13V	T9	40V
S4	14V	U0	42V
S5	15V	U1	46V
S6	16V	U2	48V
S7	17V	U3	50V
S8	18V	U4	54V
S9	20V	U5	57V
T0	22V	U6	58V
T1	24V	U7	60V

Package

Suffix	Name
DDF	SOT-23

Reel

Suffix	Name
R	Large

1. Suffix 02, 05, and 10 with VIT of 800mV corresponds to the adjustable variant, do not have internal voltage divider
2. Not all TPS3762 devices can be decoded by this table. Refer to セクション 9.1 for a decoding table by part number.

5 Pin Configuration and Functions

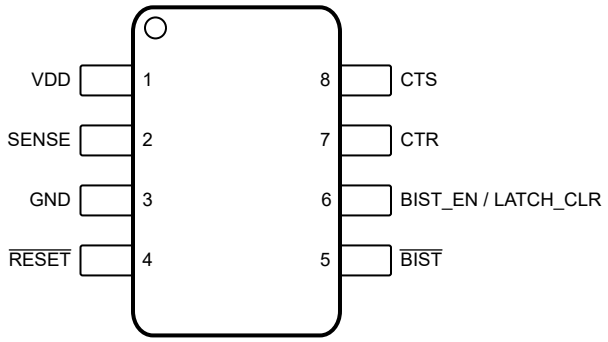

図 5-1. DDF Package, 8-Pin SOT-23, TPS3762 (Top View)

表 5-1. Pin Functions

PIN		I/O	DESCRIPTION
NAME	NO.		
VDD	1	I	**Input Supply Voltage:** Supply voltage pin. For noisy systems, bypass with a 0.1 µF capacitor to GND.
SENSE	2	I	**Sense Voltage:** Connect this pin to the supply rail that must be monitored. See SENSE for more details. Sensing Topology: **Overvoltage (OV), Undervoltage (UV), or Window (OV + UV)**
GND	3	-	**Ground.** Ground pin. All GND pins must be electrically connected to the board ground.
$\overline{\text{RESET}}$	4	O	**Output Reset Signal:** $\overline{\text{RESET}}$ asserts when SENSE crosses the voltage threshold after the sense time delay, set by CTS and remains asserted for the reset time delay period after SENSE transitions out of a fault condition. For latch variants $\overline{\text{RESET}}$ remains asserted until the latch is cleared. The active low open-drain reset output requires an external pullup resistor. See セクション 7.3.3 for more details. Output topology: **Open-Drain Active-Low**
$\overline{\text{BIST}}$	5	O	**Built-In Self-Test:** $\overline{\text{BIST}}$ asserts when a logic high input occurs on the BIST_EN / LATCH_CLR or BIST_EN pin, this initiates the internal BIST testing. $\overline{\text{BIST}}$ recovers after t_{BIST} to signify BIST completed successfully. $\overline{\text{BIST}}$ will remain asserted for a time period longer than t_{BIST} if there is a failure during $\overline{\text{BIST}}$. $\overline{\text{BIST}}$ active-low open-drain output requires an external pullup resistor. See セクション 7.3.6 for more details.
BIST_EN / LATCH_CLR	6	I	**Built-In Self-Test Enable and Latch Clear:** A logic high input must occur on the BIST_EN / LATCH_CLR to initate $\overline{\text{BIST}}$ and clear a latched $\overline{\text{OV}}$/$\overline{\text{UV}}$ fault. See セクション 7.3.6 and セクション 7.3.3.3 for more details.
CTR	7	O	**RESET Time Delay:** User-programmable reset time delay for $\overline{\text{RESET}}$. Connect an external capacitor for adjustable time delay or leave the pin floating for the shortest delay. See セクション 7.3.4 for more details.
CTS	8	O	**SENSE Time Delay:** User-programmable sense time delay for SENSE. Connect an external capacitor for adjustable time delay or leave the pin floating for the shortest delay. See セクション 7.3.5 for more details.

Copyright © 2024 Texas Instruments Incorporated

6 Specifications

6.1 Specifications

6.2 Absolute Maximum Ratings

over operating free-air temperature range, unless otherwise noted [1]

		MIN	MAX	UNIT
Voltage	V_{DD}, $V_{SENSE(Adjustable)}$, $V_{\overline{RESET}}$	–0.3	70	V
Voltage	$V_{SENSE(Fixed)}$	–65	70	V
Voltage	V_{CTS}, V_{CTR}	–0.3	6	V
Voltage	V_{BIST}, V_{BIST_EN}, $V_{BIST_EN/LATCH_CLR}$	–0.3	6	V
Current	I_{RESET}, I_{BIST}		10	mA
Temperature [2]	Operating junction temperature, T_J	–40	150	°C
Temperature [2]	Operating Ambient temperature, T_A	–40	150	°C
Temperature [2]	Storage, T_{stg}	–65	150	°C

(1) Stresses beyond those listed under Absolute Maximum Ratings may cause permanent damage to the device. These are stress ratings only, which do not imply functional operation of the device at these or any other conditions beyond those indicated under Recommended Operating Conditions. Exposure to absolute-maximum-rated conditions for extended periods may affect device reliability.
(2) As a result of the low dissipated power in this device, it is assumed that $T_J = T_A$.

6.3 Recommended Operating Conditions

over operating free-air temperature range (unless otherwise noted)

		MIN	NOM	MAX	UNIT
Voltage	V_{DD}	2.7		65	V
Voltage	V_{SENSE}, $V_{\overline{RESET}}$	0		65	V
Voltage	V_{CTS}, V_{CTR}	0		5.5	V
Voltage	$V_{\overline{BIST}}$, V_{BIST_EN}, $V_{BIST_EN/LATCH_CLR}$	0		5.5	V
Current	$I_{\overline{RESET}}$, $I_{\overline{BIST}}$	0		5	mA
T_J [1]	Junction temperature (free air temperature)	–40		125	°C

(1) As a result of the low dissipated power in this device, it is assumed that $T_J = T_A$.

6.4 Thermal Information

THERMAL METRIC [1]		TPS3762 DDF 8-PIN	UNIT
$R_{\theta JA}$	Junction-to-ambient thermal resistance	154.6	°C/W
$R_{\theta JC(top)}$	Junction-to-case (top) thermal resistance	77.4	°C/W
$R_{\theta JB}$	Junction-to-board thermal resistance	73.2	°C/W
ψ_{JT}	Junction-to-top characterization parameter	4.8	°C/W
ψ_{JB}	Junction-to-board characterization parameter	72.9	°C/W
$R_{\theta JC(bot)}$	Junction-to-case (bottom) thermal resistance	N/A	°C/W

(1) For more information about traditional and new thermal metrics, see the Semiconductor and IC Package Thermal Metrics application report.

6.5 Electrical Characteristics

At $V_{DD(MIN)} \leq V_{DD} \leq V_{DD\ (MAX)}$, CTR = CTS = open, output $\overline{RESET}$ pull-up resistor R_{PU} = 10 kΩ, voltage V_{PU} = 5.5 V, output $\overline{BIST}$ pull-up resistor $R_{PU_\overline{BIST}}$ = 10 kΩ, voltage $V_{PU_\overline{BIST}}$= 5.5 V, and load C_{LOAD} = 10 pF. The operating free-air temperature range T_A = – 40°C to 125°C, unless otherwise noted. Typical values are at T_A = 25°C and V_{DD} = 12 V and V_{IT} = 6.5 V (V_{IT} refers to V_{ITN} or V_{ITP}).

PARAMETER		TEST CONDITIONS	MIN	TYP	MAX	UNIT
POWER SUPPLY						
V_{DD}	Supply Voltage		2.7		65	V
UVLO [1]	Undervoltage Lockout	V_{DD} rising above $V_{DD\ (MIN)}$			2.6	V
UVLO(HYS) [1]	Undervoltage Lockout Hysteresis	V_{DD} falling below $V_{DD\ (MIN)}$		500		mV
$V_{POR(\overline{RESET})}$	Power on Reset Voltage [2] $\overline{RESET}$, Active Low (Open-Drain)	$V_{OL(MAX)}$ = 300 mV $I_{OUT\ (Sink)}$ = 15 µA			1.4	V
$V_{POR(\overline{BIST})}$	Power on Reset Voltage [2] $\overline{BIST}$, Active Low (Open-Drain)	$V_{OL(MAX)}$ = 300 mV $I_{OUT\ (Sink)}$ = 15 µA			1.4	V
I_{DD}	Supply current into V_{DD} pin	V_{IT} = 800 mV $V_{DD\ (MIN)} \leq V_{DD} \leq V_{DD\ (MAX)}$		4	8.1	µA
SENSE (Input)						
I_{SENSE}	Input current	V_{IT} = 800 mV			200	nA
V_{ITN}	Input Threshold Negative (Undervoltage)	V_{IT} = 800 mV [3]	-0.9		0.9	%
V_{ITP}	Input Threshold Positive (Overvoltage)	V_{IT} = 800 mV [3]	-0.9		0.9	%
V_{HYS}	Hysteresis Accuracy [4]	V_{IT} = 0.8 V V_{HYS} Range = 2%	1.5	2	2.5	%
$\overline{RESET}$ (Output)						
$I_{lkg(OD)}$	Open-Drain leakage	$V_{\overline{RESET}}$ = 5.5 V $V_{ITN} < V_{SENSE} < V_{ITP}$			300	nA
$I_{lkg(OD)}$	Open-Drain leakage	$V_{\overline{RESET}}$ = 65 V $V_{ITN} < V_{SENSE} < V_{ITP}$			300	nA
V_{OL} [5]	Low level output voltage	2.7 V ≤ VDD ≤ 65 V $I_{\overline{RESET}}$ = 2.7 mA			350	mV

Copyright © 2024 Texas Instruments Incorporated

6.5 Electrical Characteristics (続き)

At $V_{DD(MIN)} \leq V_{DD} \leq V_{DD\ (MAX)}$, CTR = CTS = open, output $\overline{RESET}$ pull-up resistor R_{PU} = 10 kΩ, voltage V_{PU} = 5.5 V, output $\overline{BIST}$ pull-up resistor $R_{PU_\overline{BIST}}$ = 10 kΩ, voltage $V_{PU_\overline{BIST}}$= 5.5 V, and load C_{LOAD} = 10 pF. The operating free-air temperature range T_A = – 40°C to 125°C, unless otherwise noted. Typical values are at T_A = 25°C and V_{DD} = 12 V and V_{IT} = 6.5 V (V_{IT} refers to V_{ITN} or V_{ITP}).

PARAMETER		TEST CONDITIONS	MIN	TYP	MAX	UNIT
Capacitor Timing (CTS, CTR)						
R_{CTR}	Internal resistance (CTR)		3.2	4	4.8	MΩ
R_{CTS}	Internal resistance (CTS)		3.2	4	4.8	MΩ
Built-in Self-test						
$I_{lkg(\overline{BIST})}$	Open-Drain leakage	$V_{\overline{BIST}}$ = 5.5 V $V_{ITN} < V_{SENSE} < V_{ITP}$			300	nA
$I_{lkg(\overline{BIST})}$	Open-Drain leakage	$V_{\overline{BIST}}$ = 3.3 V $V_{ITN} < V_{SENSE} < V_{ITP}$			300	nA
$V_{\overline{BIST}_OL}$	Low level output voltage	2.7 V ≤ VDD ≤ 65 V $I_{\overline{BIST}}$ = 5 mA			300	mV
V_{BIST_EN}	BIST_EN pin logic low input				500	mV
V_{BIST_EN}	BIST_EN pin logic high input		1300			mV
$V_{BIST_EN/LATCH_CLR}$	LATCH_CLR pin logic low input				500	mV
$V_{BIST_EN/LATCH_CLR}$	LATCH_CLR pin logic high input		1300			mV

(1) When V_{DD} voltage falls below UVLO, $\overline{RESET}$ is asserted. V_{DD} slew rate ≤ 100 mV / µs
(2) V_{POR} is the minimum V_{DD} voltage for a controlled output state. Below V_{POR}, the output cannot be determined. V_{DD} slew rate ≤ 100mV/µs
(3) For adjustable voltage guidelines and resistor selection refer to **Adjustable Voltage Thresholds** in **Application and Implementation section**
(4) Hysteresis is with respect to V_{ITP} and V_{ITN} voltage threshold. V_{ITP} has negative hysteresis and V_{ITN} has positive hysteresis.
(5) For V_{OH} and V_{OL} relation to output variants refer to **Timing Figures after the Timing Requirement Table**

6.6 Switching Requirements

At $V_{DD(MIN)} \leq V_{DD} \leq V_{DD\ (MAX)}$, CTR = CTS = open and enabled, output $\overline{RESET}$ pull-up resistor R_{PU} = 10 kΩ, voltage V_{PU} = 5.5 V, output $\overline{BIST}$ pull-up resistor $R_{PU_\overline{BIST}}$ = 10 kΩ, voltage $V_{PU_\overline{BIST}}$= 5.5 V, and load C_{LOAD} = 10 pF. The operating free-air temperature range T_A = – 40°C to 125°C, unless otherwise noted. Typical values are at T_A = 25°C and V_{DD} = 12 V and V_{IT} = 6.5 V (V_{IT} refers to V_{ITN} or V_{ITP}).

PARAMETER		TEST CONDITIONS	MIN	TYP	MAX	UNIT
Common Switching Requirements						
$t_{CTR(No\ Cap)}$	$\overline{RESET}$ release time delay (CTR)(1)	VIT = 800 mV C_{CTR} = Open 20% Overdrive from Hysteresis		350	600	µs
$t_{CTS(No\ Cap)}$	Sense detect time delay (CTS)(2)	VIT = 800 mV C_{CTS} = Open 20% Overdrive from V_{IT}		85	100	µs
t_{SD}	Startup Delay (3)	C_{CTR} = Open		1		ms
BIST Switching Requirements						
$t_{BIST_en_pd}$	Rising edge of BIST_EN to BIST asserting			2.3		µs
$t_{BIST_en_pd}$	Rising edge of BIST_EN to RESET asserting			2.3		µs
$t_{\overline{BIST}_recover}$	Rising edge of $\overline{BIST}$ to SENSE input valid	C_{CTR} = Open, BIST = Enabled		350	600	µs
$t_{\overline{BIST}}$	BIST run time				3.5	ms
$t_{SD+\overline{BIST}}$	Startup time with BIST run time				4.5	ms
LATCH Switching Requirements						
$t_{BIST_EN/LATCH_CLR_Recover}$	Rising edge of $\overline{BIST}$ to SENSE input valid	C_{CTR} = Open, BIST = Disabled		10		µs

(1) **CTR Reset detect time delay:**
Overvoltage active-low output is measure from $V_{ITP\ -\ HYS}$ to V_{OH}
Undervoltage active-low output is measure from $V_{ITN\ +\ HYS}$ to V_{OH}

(2) **CTS Sense detect time delay:**
Overvoltage active-low output is measure from V_{ITP} to V_{OL}
Undervoltage active-low output is measure from V_{ITN} to V_{OL}

(3) During the power-on sequence, V_{DD} must be at or above $V_{DD\ (MIN)}$ for at least $t_{SD+\overline{BIST}} + t_{CTR}$ before the output is in the correct state based on V_{SENSE}.
t_{SD} time includes the propagation delay (C_{CTR} = Open). Capacitor on CTR will add time to t_{SD}.

Copyright © 2024 Texas Instruments Incorporated

6.7 Timing Requirements

At $V_{DD(MIN)} \leq V_{DD} \leq V_{DD\ (MAX)}$, CTR = CTS = open and enabled, output $\overline{RESET}$ pull-up resistor R_{PU} = 10 kΩ, voltage V_{PU} = 5.5 V, output $\overline{BIST}$ pull-up resistor $R_{PU_\overline{BIST}}$ = 10 kΩ, voltage $V_{PU_\overline{BIST}}$= 5.5 V, and load C_{LOAD} = 10 pF. The operating free-air temperature range T_A = – 40°C to 125°C, unless otherwise noted. Typical values are at T_A = 25°C and V_{DD} = 12 V and V_{IT} = 6.5 V (V_{IT} refers to V_{ITN} or V_{ITP}).

PARAMETER		TEST CONDITIONS	MIN	TYP	MAX	UNIT
Common timing parameters						
BIST timing parameters						
$t_{BIST_en\ Glitch}$	BIST_EN Glitch immunity			1.1		µs
t_{BIST_en}	Minimum BIST_EN input width to initate BIST			1.2	8	µs
LATCH timing parameters						
$t_{BIST_EN/LATCH_CLR\ Glitch}$	Latch Glitch immunity			1.5		µs
$t_{BIST_EN/LATCH_CLR}$	Latch input width to clear latch			1.6		µs

6.8 Timing Diagrams

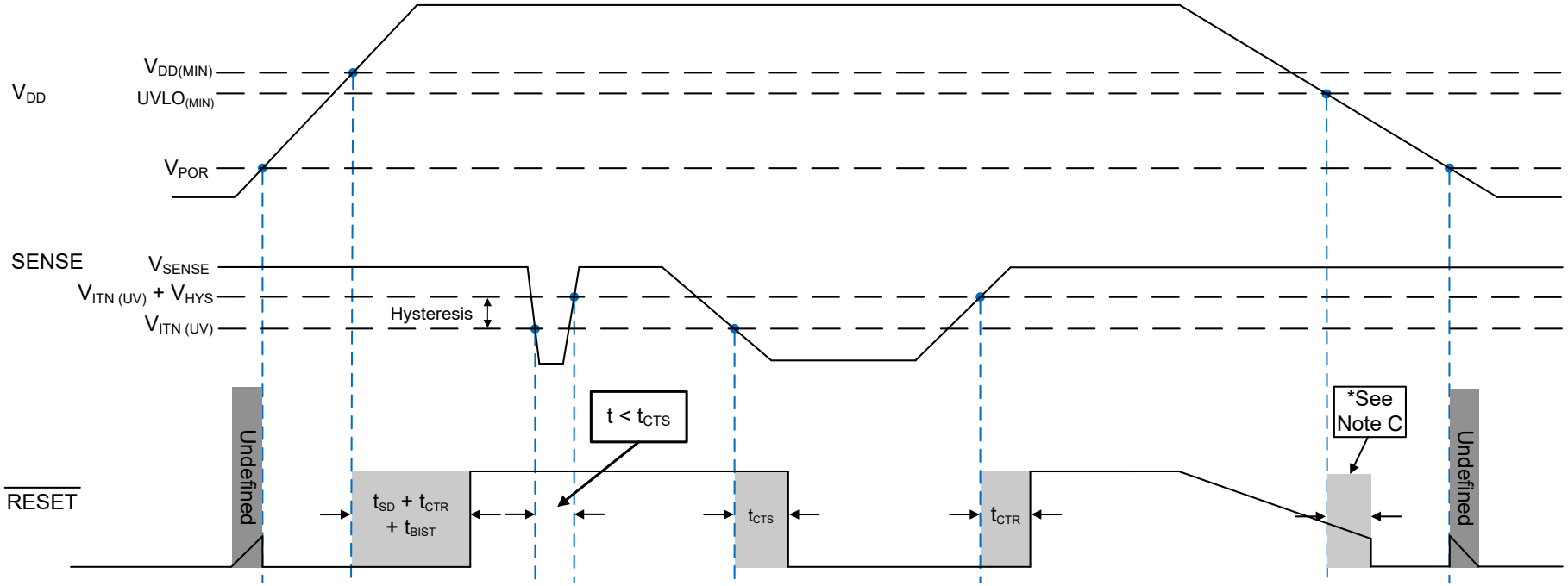

A. The timing diagram assumes the open-drain output $\overline{\text{RESET}}$ pin is connected via an external pull-up resistor to VDD.

B. Be advised that 図 6-1 shows the VDD falling slew rate is slow or the VDD decay time is much larger than the propagation detect delay (t_{CTR}) time.

C. $\overline{\text{RESET}}$ is asserted when VDD goes below the $UVLO_{(MIN)}$ threshold after the time delay, t_{CTR}, is reached.

図 6-1. SENSE Undervoltage (UV) Timing Diagram

Copyright © 2024 Texas Instruments Incorporated

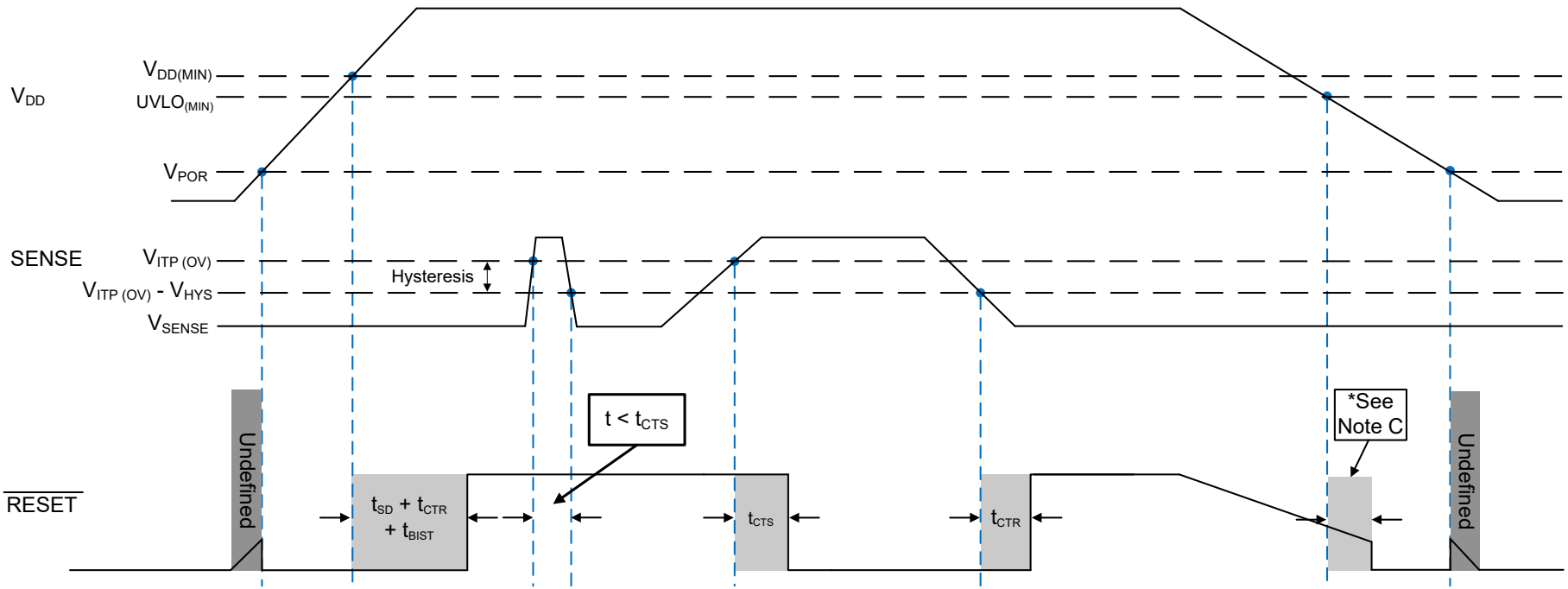

A. The timing diagram assumes the open-drain output $\overline{\text{RESET}}$ pin is connected via an external pull-up resistor to VDD.

B. Be advised that 図 6-2 shows the VDD falling slew rate is slow or the VDD decay time is much larger than the propagation detect delay (t_{CTR}) time.

C. $\overline{\text{RESET}}$ is asserted when VDD goes below the $UVLO_{(MIN)}$ threshold after the time delay, t_{CTR}, is reached.

図 6-2. SENSE Overvoltage (OV) Timing Diagram

6.9 Typical Characteristic

Typical characteristics show the typical performance of the TPS3762 device. Test conditions are T_A = 25°C, unless otherwise noted.

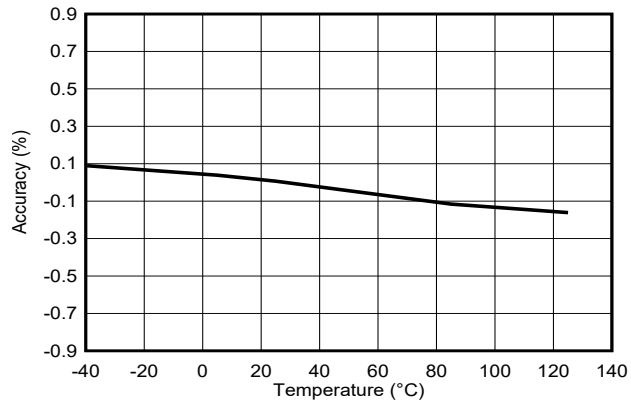

図 6-3. Undervoltage Accuracy vs Temperature (V_{IT} = 0.8 V)

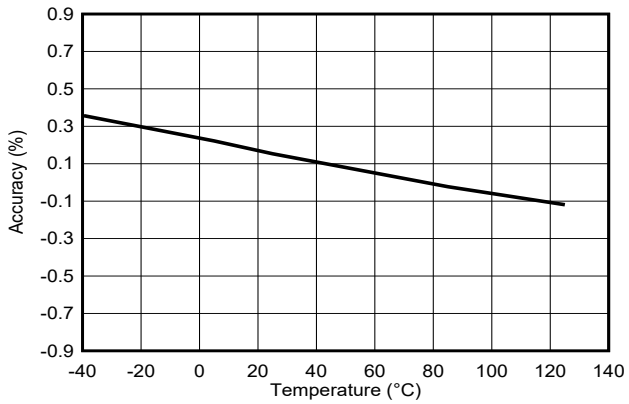

図 6-4. Overvoltage Accuracy vs Temperature (V_{IT} = 0.8 V)

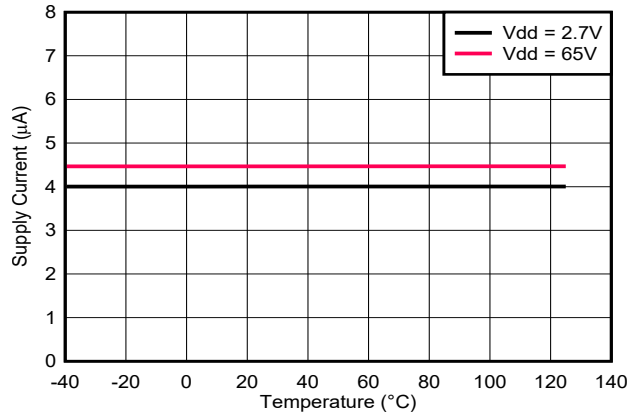

図 6-5. I_{DD} vs Temperature ($\overline{RESET}$ = High, V_{IT} = 0.8 V)

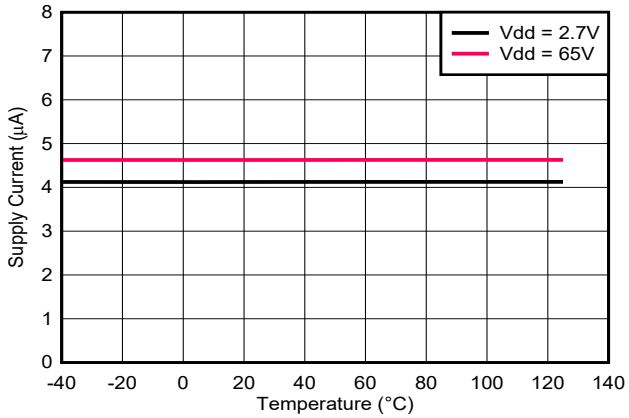

図 6-6. I_{DD} vs Temperature ($\overline{RESET}$ = Low, V_{IT} = 0.8 V)

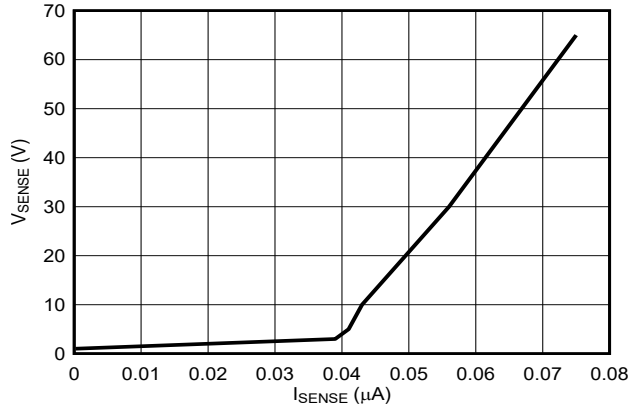

図 6-7. V_{SENSE} vs I_{SENSE} (V_{DD} = 2.7 V)

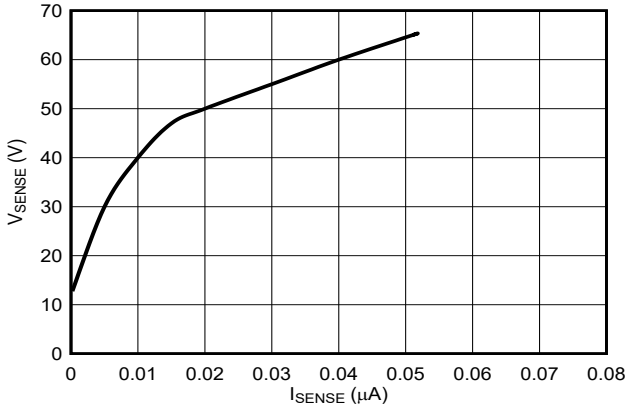

図 6-8. V_{SENSE} vs I_{SENSE} (V_{DD} = 65 V)

Copyright © 2024 Texas Instruments Incorporated

6.9 Typical Characteristic (continued)

Typical characteristics show the typical performance of the TPS3762 device. Test conditions are T_A = 25°C, unless otherwise noted.

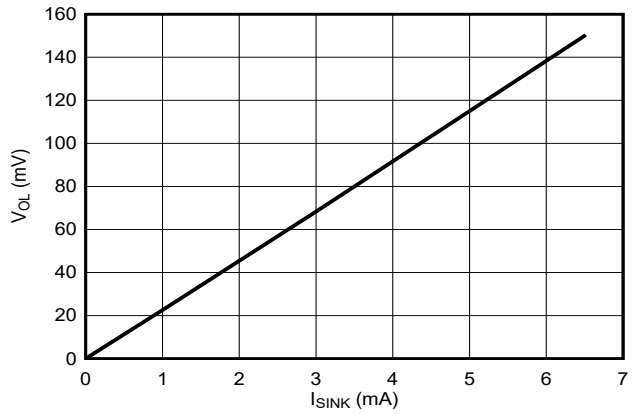

図 6-9. Open-Drain Active Low V_{OL} vs $I_{\overline{RESET}}$ (V_{DD} = 2.7 V)

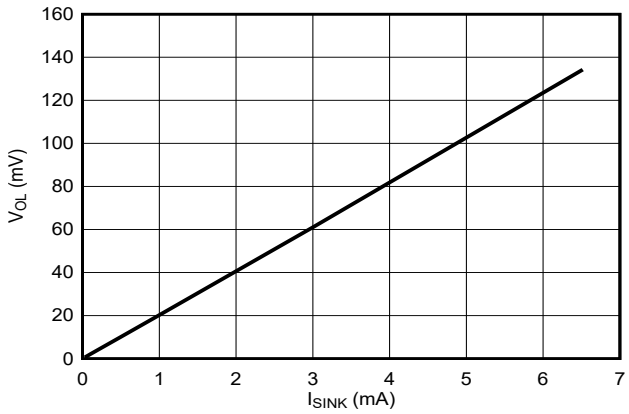

図 6-10. Open-Drain Active Low V_{OL} vs $I_{\overline{RESET}}$ (V_{DD} = 65 V)

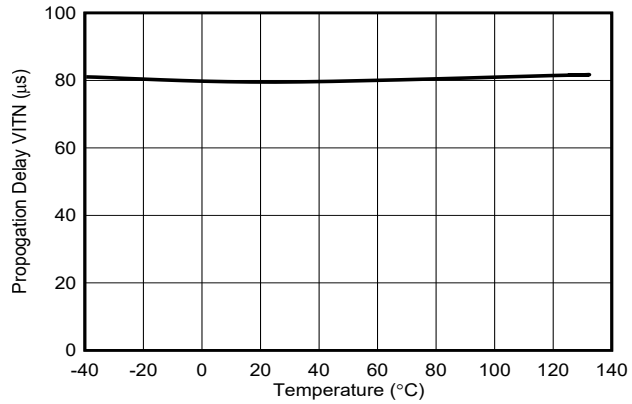

図 6-11. Propogation Delay (Undervoltage) vs Temperature (V_{IT} = 0.8V, CTS = Enabled = 50pF)

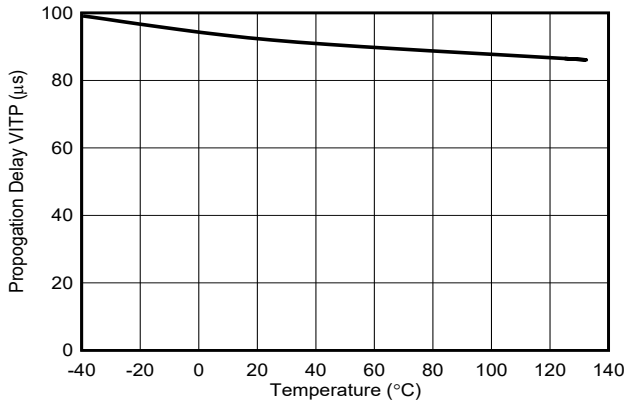

図 6-12. Propogation Delay (Overvoltage) vs Temperature (V_{IT} = 0.8V, CTS = Enabled = 50pF)

7 Detailed Description

7.1 Overview

The TPS3762 is a family of high voltage and low quiescent current voltage supervisors with overvoltage and undervoltage threshold voltage options, delay timings, Built-In Self-Test, and latch. The TPS3762 over and undervoltage thresholds are device specific and are offered in either adjustable thresholds or fixed threholds. The adjustable threshold option uses an external resistor ladder to make a voltage divider on SENSE pin which uses the internal 800 mV threshold to trigger overvoltage and undervoltage faults. The benefit of using an adjustable option with external resistors is the faster reaction speed compared to a fixed internal threshold variant. The TPS3762 fixed threshold option utilizes an integrated voltage divider to eliminate the need for external resistors and provides a lower system leakage current.

VDD, SENSE and $\overline{\text{RESET}}$ pins can support 65 V continuous operation. SENSE has -65 V reverse polarity protection. Both VDD and SENSE voltage levels can be independent of each other. TPS3762 includes a reset output latching feature that holds the output active to help system achieve safe state. Fixed and programmable sense and reset delay are available to avoid false resets and false reset releases.

7.2 Functional Block Diagram

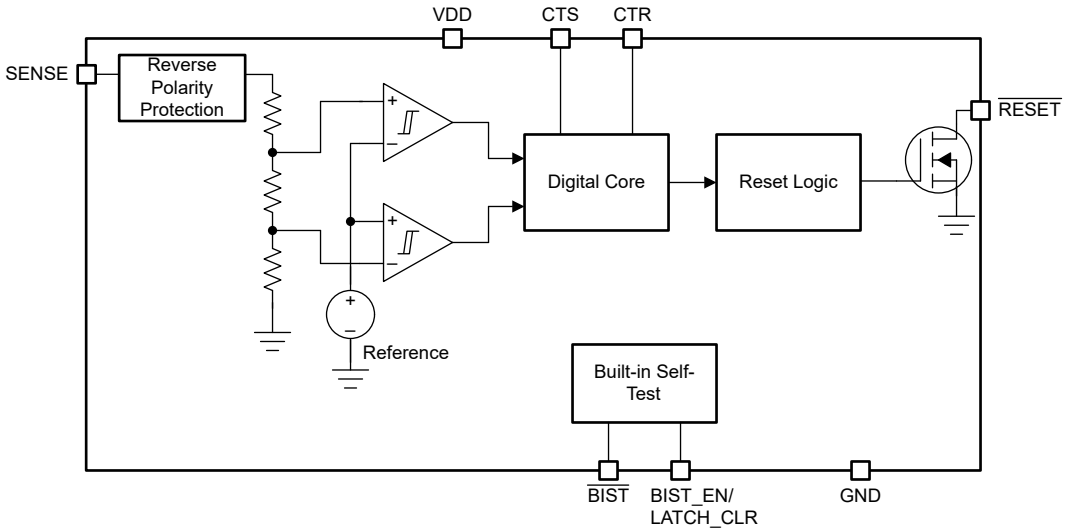

図 7-1. Fixed Threshold Functional Block Diagram

Copyright © 2024 Texas Instruments Incorporated

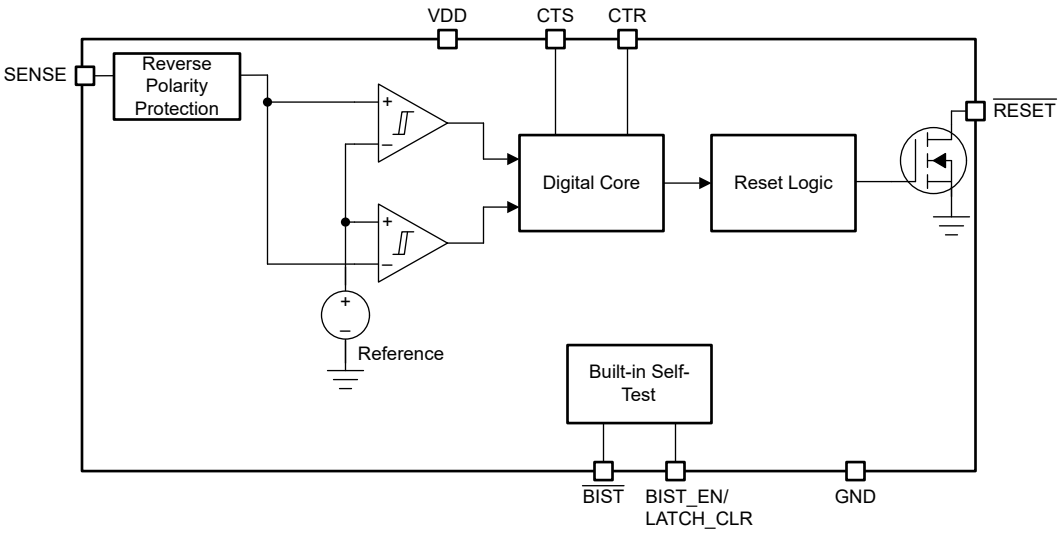

図 7-2. Adjustable Threshold Functional Block Diagram

7.3 Feature Description

7.3.1 Input Voltage (VDD)

VDD operating voltage ranges from 2.7 V to 65 V. An input supply capacitor is not required for this device; however, if the input supply is noisy good analog practice is to place a 0.1 µF capacitor between the VDD and GND.

VDD needs to be at or above $V_{DD(MIN)}$ for at least the start-up time delay (t_{SD}) for the device to be fully functional.

VDD voltage is independent of V_{SENSE} and V_{RESET}, meaning that VDD can be higher or lower than the other pins.

7.3.1.1 Undervoltage Lockout (V_{POR} < V_{DD} < UVLO)

When the voltage on V_{DD} is less than the UVLO voltage, but greater than the power-on reset voltage (V_{POR}), the $\overline{RESET}$ and BIST pins will be asserted, regardless of the voltage at SENSE pins.

7.3.1.2 Power-On Reset (V_{DD} < V_{POR})

When the voltage on VDD is lower than the power on reset voltage (V_{POR}), the output signal is undefined and is not to be relied upon for proper device function.

Note: 図 7-3 and 図 7-4 assume an external pull-up resistor is connected the reset pin to VDD.

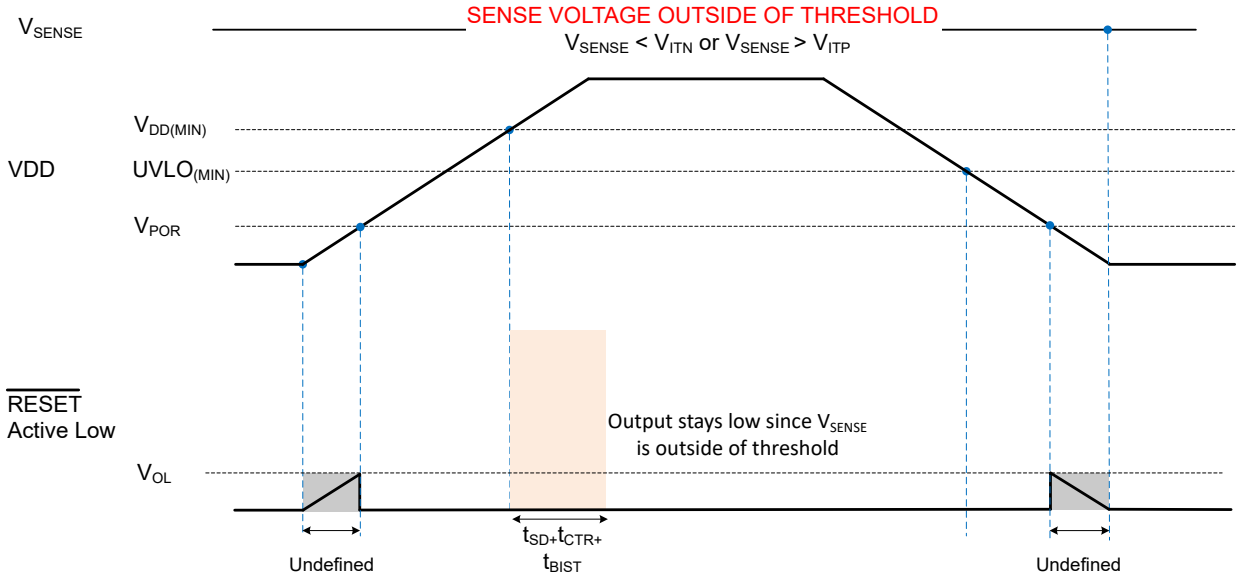

図 7-3. Power Cycle (SENSE Outside of Nominal Voltage)

Copyright © 2024 Texas Instruments Incorporated

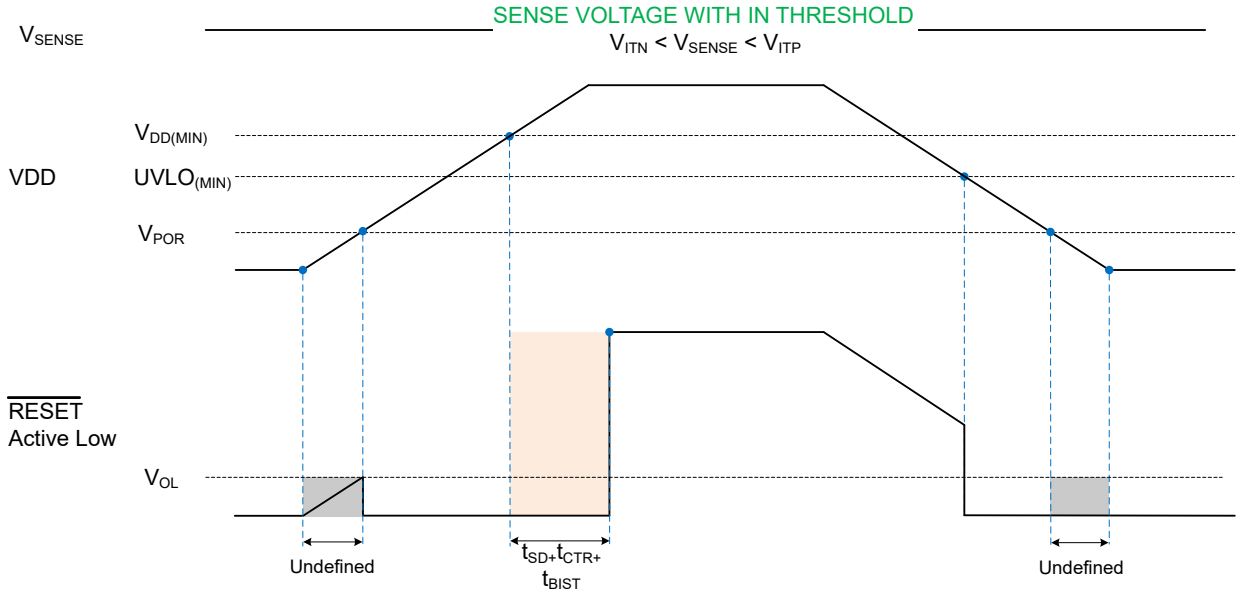

図 7-4. Power Cycle (SENSE Within Nominal Voltage)

7.3.2 SENSE

The SENSE pin connects to the supply rail that is to be monitored. The sense pin on each device is configured to monitor either overvoltage (OV), undervoltage (UV), and window (OV&UV) conditions. TPS3762 device offers built-in hysteresis that provides noise immunity and maintains stable operation.

Although not required in most cases, for noisy applications good analog design practice is to place a 10 nF to 100 nF bypass capacitor at the SENSE inputs to reduce sensitivity to transient voltages on the monitored signal. SENSE can be connected directly to VDD pin.

7.3.2.1 Reverse Polarity Protection

The TPS3762 has reverse polarity protection on the sense pin up to -65 V. This allows the TPS3762 to support accidental or test simulated reverse connections without damaging the device. This protection permits the TPS3762 to connect directly off of the supply prior to any reverse polarity protection diodes for accurate voltage measurement.

7.3.2.2 SENSE Hysteresis

TPS3762 device offers built-in hysteresis around the UV and OV thresholds to avoid erroneous $\overline{\text{RESET}}$ deassert. The hysteresis is opposite to the threshold voltage; for overvoltage options the hysteresis is subtracted from the positive threshold (V_{ITP}), for undervoltage options hysteresis is added to the negative threshold (V_{ITN}).

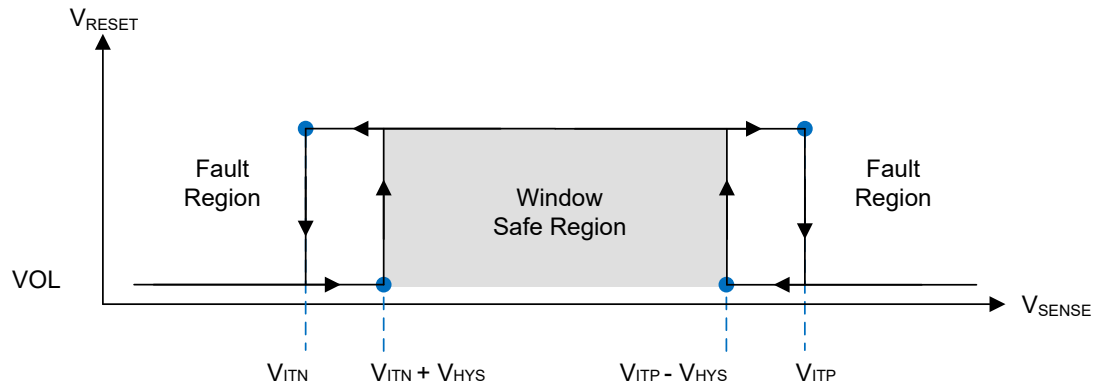

図 7-5. Hysteresis (Undervoltage & Overvoltage Active-Low)

Copyright © 2024 Texas Instruments Incorporated

表 7-1. Common Adjustable Hysteresis Lookup Table

TARGET			DEVICE ACTUAL HYSTERESIS OPTION
ADJUSTABLE THRESHOLD	TOPOLOGY	RELEASE VOLTAGE (V)	
800 mV	Overvoltage	784 mV	-2%
800 mV	Overvoltage	760 mV	-5%
800 mV	Overvoltage	720 mV	-10%
800 mV	Undervoltage	816 mV	2%
800 mV	Undervoltage	840 mV	5%
800 mV	Undervoltage	880 mV	10%

表 7-1 shows a sample of hysteresis for the 800 mV adjustable variant for the TPS3762.

Knowing the amount of hysteresis voltage, the release voltage for the undervoltage (UV) channel is (V_{ITN} + V_{HYS}) and for the overvoltage (OV) channel is (V_{ITP} - V_{HYS}).

Undervoltage (UV) Channel

V_{ITN} = 800 mV

Voltage Hysteresis (V_{HYS}) = 2% = 16 mV

Hysteresis Accuracy = +1.5% to +2.5% = 16.24 mV to 16.4 mV

Release Voltage = V_{ITN} + V_{HYS} = 816.24 mV to 816.4 mV

Overvoltage (OV) Channel

V_{ITP} = 800 mV

Voltage Hysteresis (V_{HYS}) = 2% = 16 mV

Hysteresis Accuracy = +1.5% to +2.5% = 16.24 mV to 16.4 mV

Release Voltage = V_{ITP} - V_{HYS} = 783.6 mV to 783.76 mV

7.3.3 Output Logic Configurations

TPS3762 is a single channel device that has a single input sense pin and a single reset pin. The single reset is available with open drain topology.

7.3.3.1 Open-Drain

Open-drain output requires an external pull-up resistor to hold the voltage high to the required voltage logic. Connect the pull-up resistor to the proper voltage rail to enable the output to be connected to other devices at the correct interface voltage levels.

To select the right pull-up resistor consider system V_{OH} and the Open-Drain Leakage Current (I_{lkg}) provided in the electrical characteristics, high resistors values will have a higher voltage drop affecting the output voltage high. The open-drain output can be connected as a wired-AND logic with other open-drain signals such as another TPS3762 open-drain output pin.

7.3.3.2 Active-Low ($\overline{RESET}$)

$\overline{RESET}$ (active low) denoted with a bar above the pin label. $\overline{RESET}$ remains high voltage (V_{OH}, deasserted) (open-drain variant V_{OH} is measured against the pullup voltage) as long as sense voltage is in normal operation within the threshold boundaries and VDD voltage is above UVLO. To assert a reset sense pins needs to meet the condition below:

- For undervoltage variant the SENSE voltage need to cross the lower boundary (V_{ITN}).
- For overvoltage variant the SENSE voltage needs to cross the upper boundary (V_{ITP}).

7.3.3.3 Latching

The TPS3762 comes with the optional output reset latching feature for the window (OV & UV) and OV variants, check the セクション 4 to verify variant specific latch functionality. When using a variant with latch enabled ($V_{BIST_EN/LATCH_CLR}$ <0.5 V), whenever a fault, OV or UV, occurs $\overline{RESET}$ asserts and goes low and remains low until cleared by a logic high input ($V_{BIST_EN/LATCH_CLR}$ > 1.3 V) on the BIST_EN / LATCH_CLR pin. If the SENSE pin is in a safe region and latch is disabled, the $\overline{RESET}$ will deassert after a delay. This delay is dependent on BIST and CTR timing. See セクション 7.3.6 for more details. While $V_{BIST_EN/LATCH_CLR}$ > 1.3 V, the device is in latch disabled mode and the $\overline{RESET}$ will not latch for OV and UV on SENSE pin. While the device is in latch disabled mode the $\overline{RESET}$ will still assert for OV and UV faults.When $V_{BIST_EN/LATCH_CLR}$ < 0.5 V, latch mode will be enabled.

Copyright © 2024 Texas Instruments Incorporated

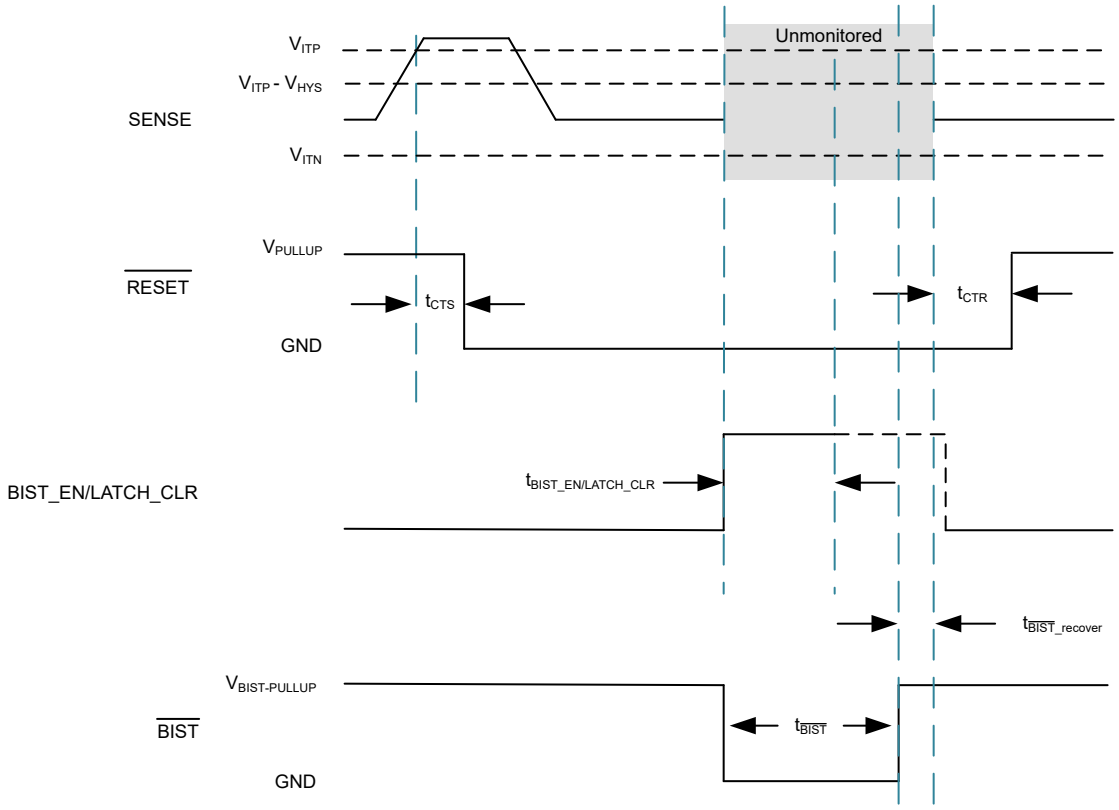

図 7-6. $\overline{\text{RESET}}$ Latch & Unlatch

7.3.4 User-Programmable Reset Time Delay

TPS3762 has adjustable reset release time delay with external capacitors.

- A capacitor on CTR programs the reset time delay of the output.
- No capacitor on this pin gives the fastest reset delay time indicated by t_{CTR} in セクション 6.7.
- Variants such as TPS3762Q use a fixed internal time delay. check the セクション 4 to verify variant specific timing.

7.3.4.1 Reset Time Delay Configuration

The time delay (t_{CTR}) can be programmed by connecting a capacitor between CTR pin and GND.

The relationship between external capacitor $C_{CTR_EXT\ (typ)}$ and the time delay $t_{CTR\ (typ)}$ is given by 式 1.

$$t_{CTR\ (typ)} = R_{CTR\ (typ)} \times C_{CTR_EXT\ (typ)} + t_{CTR\ (no\ cap)} \quad (1)$$

$R_{CTR\ (typ)}$ = is in kilo ohms (kΩ)

$C_{CTR_EXT\ (typ)}$ = is given in microfarads (µF)

$t_{CTR\ (typ)}$ = is the reset time delay (ms)

The reset delay varies according to three variables: the external capacitor (C_{CTR_EXT}), CTR pin internal resistance (R_{CTR}) provided in セクション 6, and a constant. The minimum and maximum variance due to the constant is show in 式 2 and 式 3:

$$t_{CTR\ (min)} = R_{CTR\ (min)} \times C_{CTR_EXT\ (min)} + t_{CTR\ (no\ cap\ (min))} \quad (2)$$

$$t_{CTR\ (max)} = R_{CTR\ (max)} \times C_{CTR_EXT\ (max)} + t_{CTR\ (no\ cap\ (max))} \quad (3)$$

There is no limit to the capacitor on CTR pin. Having a too large of a capacitor value can cause very slow charge up (rise times) due to capacitor leakage and system noise can cause the internal circuit to hold $\overline{RESET}$ active.

* Leakages on the capacitor can effect accuracy of reset time delay.

Copyright © 2024 Texas Instruments Incorporated

7.3.5 User-Programmable Sense Delay

TPS3762 has adjustable sense release time delay with external capacitors.

- A capacitor in CTS programs the excursion detection on SENSE.
- No capacitor on this pin gives the fastest sense delay time indicated by t_{CTS}in セクション 6.7.
- The TPS3762 comes with an optional fixed internal time delay that ignores the capacitor value at the CTS pin, check the セクション 4 to verify variant specific functionality.

7.3.5.1 Sense Time Delay Configuration

The time delay (t_{CTS}) can be programmed by connecting a capacitor between CTS pin and GND.

The relationship between external capacitor $C_{CTS_EXT\ (typ)}$ and the time delay $t_{CTS\ (typ)}$ is given by 式 4.

$$t_{CTS\ (typ)} = R_{CTS\ (typ)} \times C_{CTS_EXT\ (typ)} + t_{CTS\ (no\ cap)} \quad (4)$$

R_{CTS} = is in kilo ohms (kΩ)

C_{CTS_EXT} = is given in microfarads (µF)

t_{CTS} = is the sense time delay (ms)

The sense delay varies according to three variables: the external capacitor (C_{CTS_EXT}), CTS pin internal resistance (R_{CTS}) provided in Electrical Characteristics, and a constant. The minimum and maximum variance due to the constant is show in 式 5 and 式 6:

$$t_{CTS\ (min)} = R_{CTS\ (min)} \times C_{CTS_EXT\ (min)} + t_{CTS\ (no\ cap\ (min))} \quad (5)$$

$$t_{CTR\ (max)} = R_{CTS\ (max)} \times C_{CTS_EXT\ (max)} + t_{CTSx\ (no\ cap\ (max))} \quad (6)$$

The recommended maximum sense delay capacitor for the TPS3762 is limited to 10 µF as this makes sure enough time for the capacitor to fully discharge when a voltage fault occurs. Also, having a too large of a capacitor value can cause very slow charge up (rise times) and system noise can cause the internal circuit to trip earlier or later near the threshold. This leads to variation in time delay where it can make the delay accuracy worse in the presence of system noise.

* Leakages on the capacitor can effect accuracy of sense time delay.

7.3.6 Built-In Self-Test

The TPS3762 has a Built-In Self-Test (BIST) feature that runs diagnostics internally in the device. During power-up BIST is initiated automatically after crossing $V_{DD(min)}$. During BIST the $\overline{BIST}$ pin and $\overline{RESET}$ output asserts low and deasserts if the $\overline{BIST}$ test completes successfully indicating no internal faults in the device. The length of the BIST and $\overline{BIST}$ assertion is specified by t_{BIST}. If BIST is not successful, the $\overline{BIST}$ pin will say asserted low signifying an internal fault. The $\overline{RESET}$ output will stay assert on $\overline{BIST}$ failure. During BIST, the device is not monitoring the SENSE pin for faults and the $\overline{RESET}$ is not dependent on the SENSE pin voltage. The $\overline{BIST}$ sequence of internal tests verifies the internal signal chain of the device by checking for faults on the internal comparators on the SENSE pin, bandgap voltage, and the $\overline{RESET}$ output. See 図 7-7 for more details.

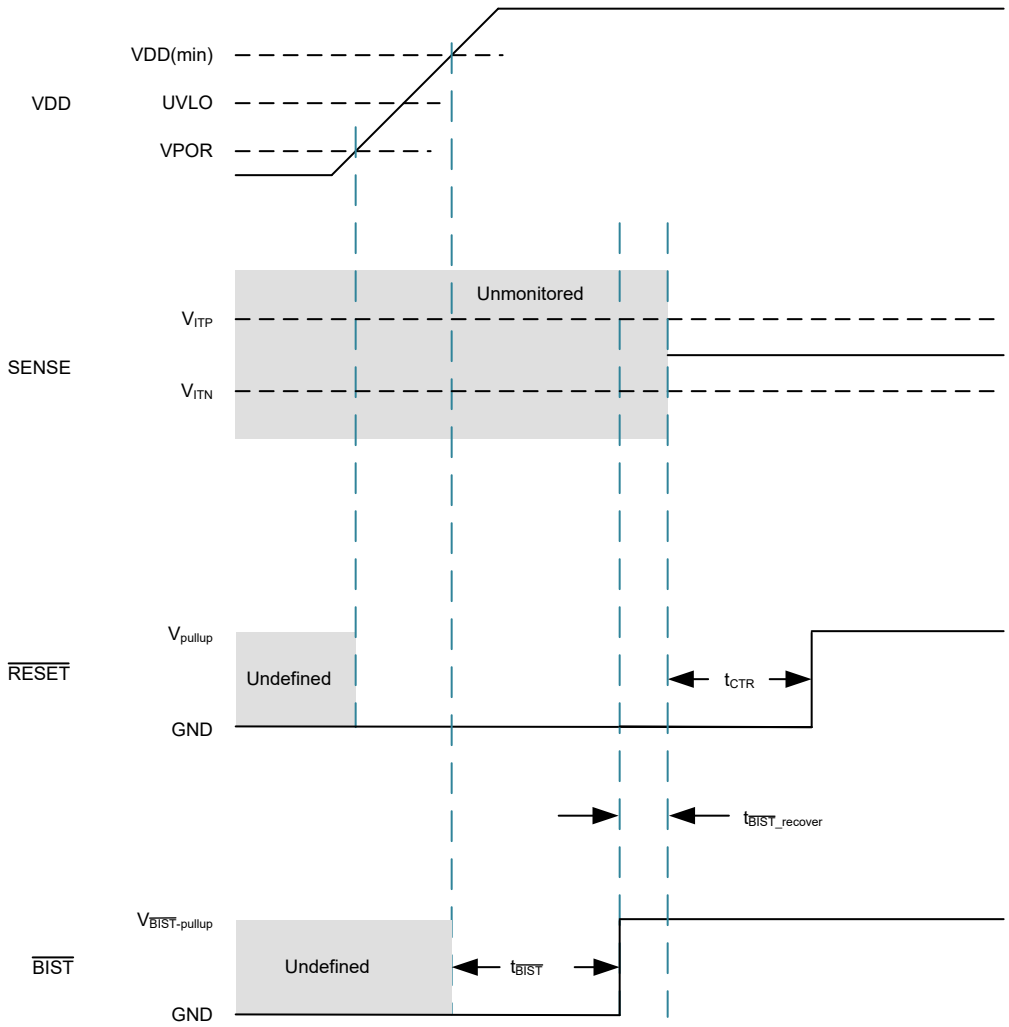

図 7-7. TPS3762 Start-Up Sequence

After a successful power-up sequence, BIST can be initiated any time with a logic high input (V_{BIST_EN} or $V_{BIST_EN/LATCH_CLR}$ > 1.3 V) on the BIST_EN / LATCH_CLR pin. BIST initiates and the $\overline{BIST}$ pin asserts only if the SENSE pin is not in a overvoltage or undervoltage fault mode. During this BIST test time period, $t_{\overline{BIST}}$, $\overline{BIST}$ pin asserts low to signify that $\overline{BIST}$ has started and $\overline{RESET}$ assertion is dependent on the device variant. Upon a successful BIST the $\overline{BIST}$ pin and $\overline{RESET}$ pin are deasserted. If BIST is not successful due to the internal device not working properly, the $\overline{RESET}$ pin and $\overline{BIST}$ pin remain asserted low signifying a fault internal to the device. See 図 7-8 and for 図 7-9 more details.

Copyright © 2024 Texas Instruments Incorporated

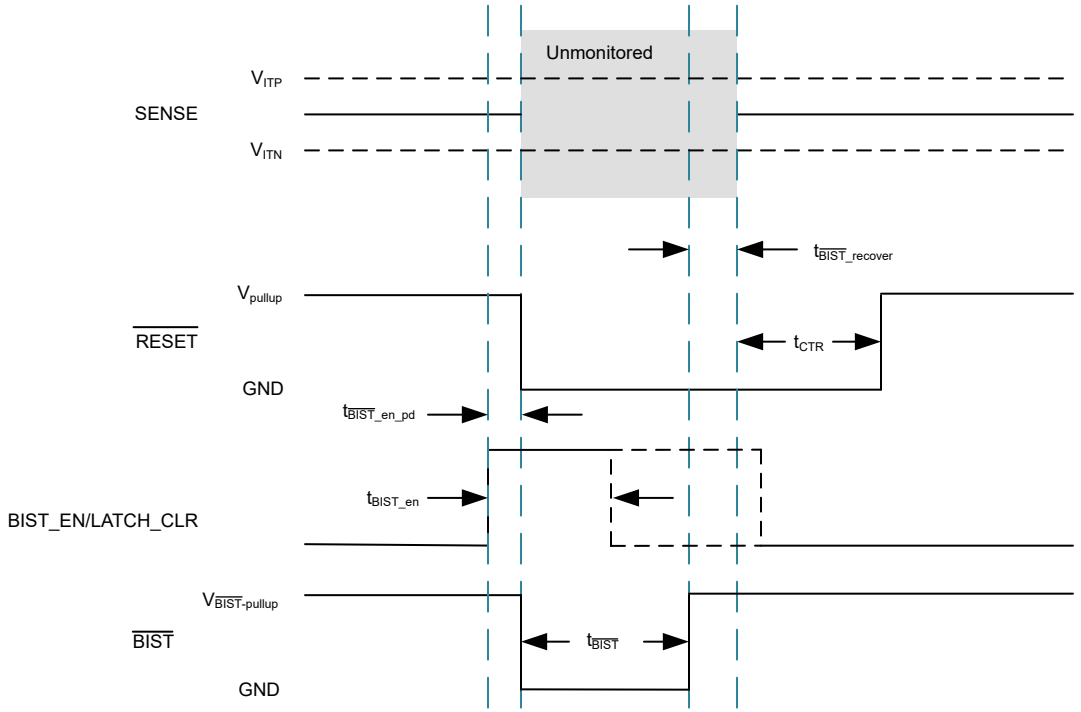

図 7-8. BIST With RESET Assertion

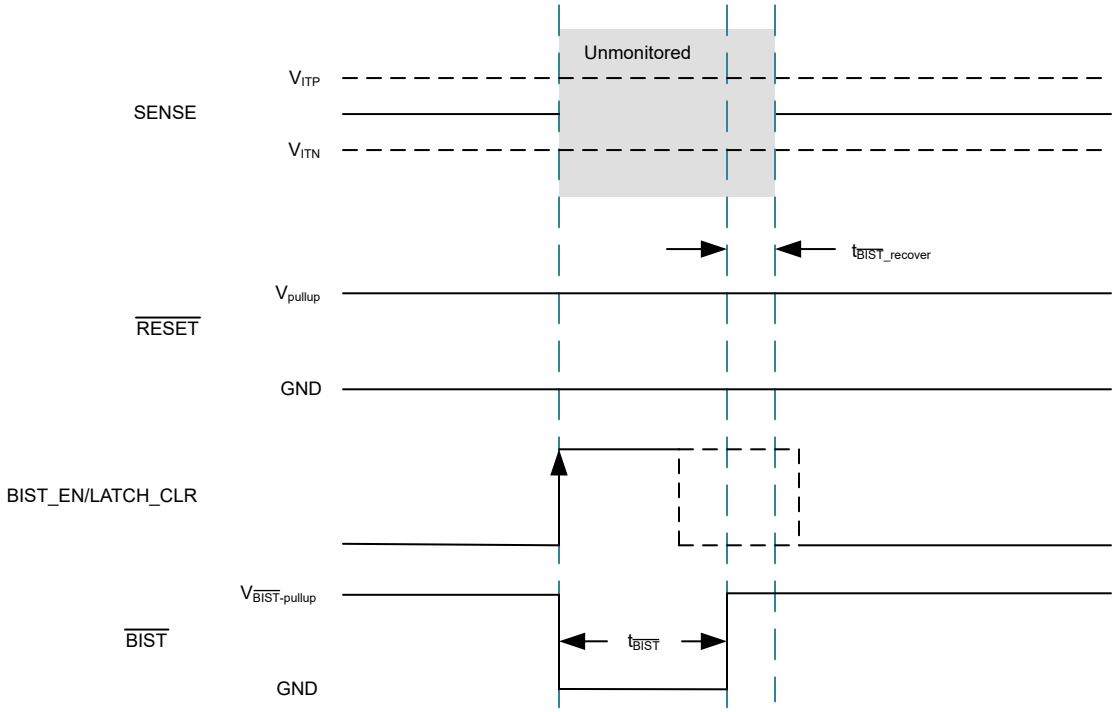

図 7-9. BIST With No RESET Assertion

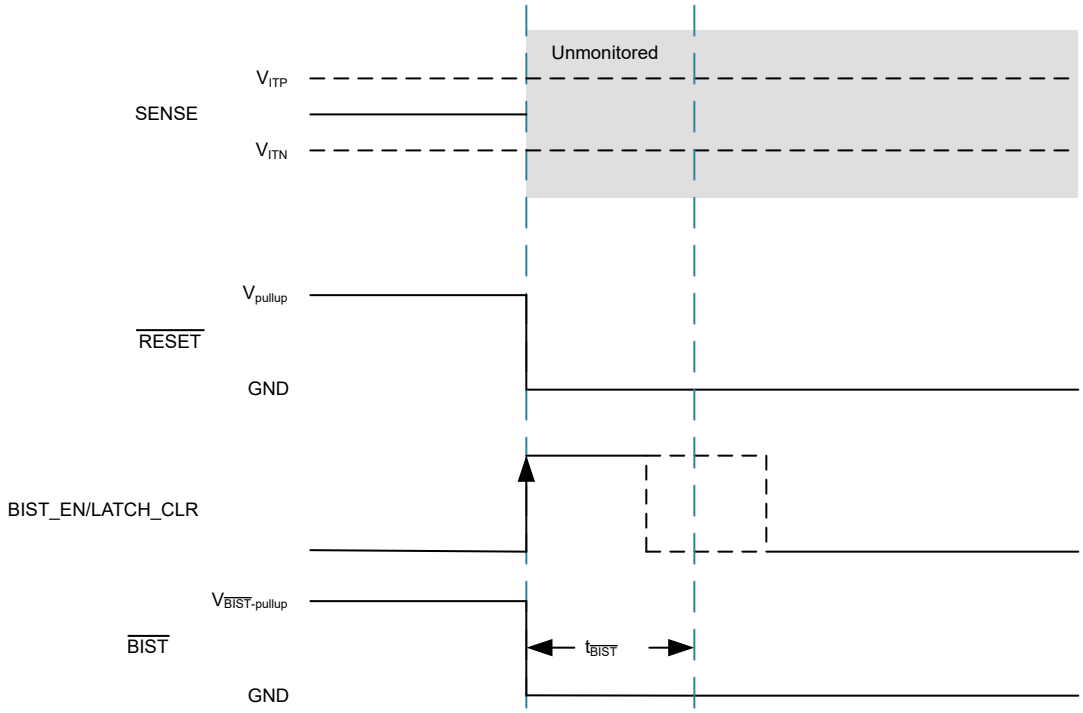

図 7-10. $\overline{\text{BIST}}$ Fail With $\overline{\text{RESET}}$ Assertion

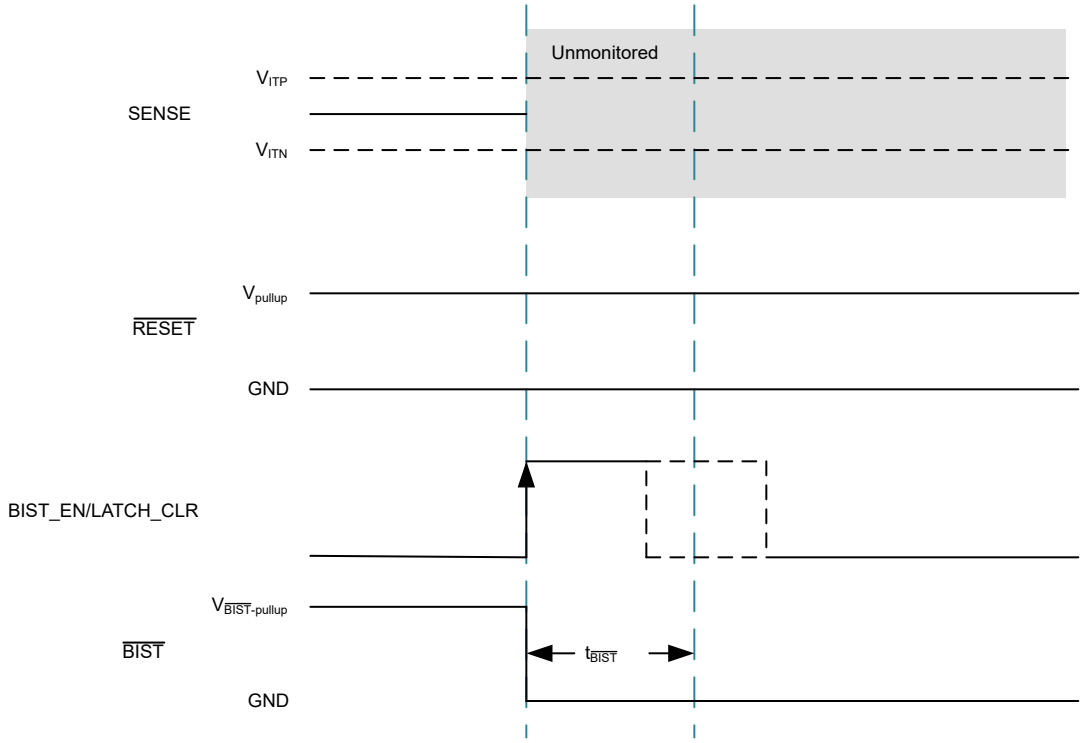

図 7-11. $\overline{\text{BIST}}$ Fail With No $\overline{\text{RESET}}$ Assertion

Copyright © 2024 Texas Instruments Incorporated

7.4 Device Functional Modes

表 7-2. Undervoltage Detect Functional Mode Truth Table

DESCRIPTION	SENSE		CTR [1]	VDD PIN	OUTPUT [2] (RESET PIN)
	PREVIOUS CONDITION	CURRENT CONDITION			
Normal Operation	SENSE > V_{ITN}	SENSE > V_{ITN}	Open or capacitor connected	V_{DD} > $V_{DD(MIN)}$	High
Undervoltage Detection	SENSE > V_{ITN}	SENSE < V_{ITN}	Open or capacitor connected	V_{DD} > $V_{DD(MIN)}$	Low
Undervoltage Detection	SENSE < V_{ITN}	SENSE > V_{ITN}	Open or capacitor connected	V_{DD} > $V_{DD(MIN)}$	Low
Normal Operation	SENSE < V_{ITN}	SENSE > V_{ITN} + HYS	Open or capacitor connected	V_{DD} > $V_{DD(MIN)}$	High
UVLO Engaged	SENSE > V_{ITN}	SENSE > V_{ITN}	Open or capacitor connected	V_{POR} < V_{DD} < $V_{DD(MIN)}$	Low
Below V_{POR}, Undefined Output	SENSE > V_{ITN}	SENSE > V_{ITN}	Open or capacitor connected	V_{DD} < V_{POR}	Undefined

(1) Reset time delay is ignored in the truth table.
(2) Open-drain active low output requires an external pull-up resistor to a pull-up voltage.

表 7-3. Overvoltage Detect Functional Mode Truth Table

DESCRIPTION	SENSE		CTR [1]	VDD PIN	OUTPUT [2] (RESET PIN)
	PREVIOUS CONDITION	CURRENT CONDITION			
Normal Operation	SENSE < V_{ITN}	SENSE < V_{ITN}	Open or capacitor connected	V_{DD} > $V_{DD(MIN)}$	High
Overvoltage Detection	SENSE < V_{ITN}	SENSE > V_{ITN}	Open or capacitor connected	V_{DD} > $V_{DD(MIN)}$	Low
Overvoltage Detection	SENSE > V_{ITN}	SENSE < V_{ITN}	Open or capacitor connected	V_{DD} > $V_{DD(MIN)}$	Low
Normal Operation	SENSE > V_{ITN}	SENSE < V_{ITN} - HYS	Open or capacitor connected	V_{DD} > $V_{DD(MIN)}$	High
UVLO Engaged	SENSE < V_{ITN}	SENSE < V_{ITN}	Open or capacitor connected	V_{POR} < V_{DD} < UVLO	Low
Below V_{POR}, Undefined Output	SENSE < V_{ITN}	SENSE < V_{ITN}	Open or capacitor connected	V_{DD} < V_{POR}	Undefined

(1) Reset time delay is ignored in the truth table.
(2) Open-drain active low output requires an external pull-up resistor to a pull-up voltage.

8 Application and Implementation

注

Information in the following applications sections is not part of the TI component specification, and TI does not warrant its accuracy or completeness. TI's customers are responsible for determining suitability of components for their purposes, as well as validating and testing their design implementation to confirm system functionality.

8.1 Application Information

The following sections describe in detail proper device implementation, depending on the final application requirements.

8.2 Adjustable Voltage Thresholds

図 8-1 illustrates an example of how to adjust the voltage threshold with external resistor dividers. The resistors can be calculated depending on the desired voltage threshold and device part number. TI recommends using the 0.8 V voltage threshold device when using an adjustable voltage variant. This variant bypasses the internal resistor ladder.

For example, consider a 12 V rail, V_{MON}, being monitored for overvoltage (OV) using of the TPS3762D02OVDDFR variant, as shown in 図 8-1. The monitored OV threshold, denoted as V_{MON+}, is the desired voltage where the device asserts the reset. For this example V_{MON+} = 35 V. To assert an overvoltage reset the voltage at the sense pin, V_{SENSE}, needs to be equal to the input threshold positive, V_{ITP}. For this example variant $V_{SENSE} = V_{ITP}$ = 0.8 V. Using R_1 and R_2 the correlation between V_{MON+} and V_{SENSE} can be seen in 式 8. Assuming R_2 = 10 kΩ, and R_1 can be calculated as R_1 = 427.5 kΩ.

$$V_{SENSE} = V_{MON+} \times (R_2 \div (R_1 + R_2)) \tag{7}$$

The TPS3762D02OVDDFR comes with variant specific 2 %, 5 %, or 10 % voltage threshold hysteresis. For the reset signal to become deasserted, V_{MON} must go below V_{ITP} - V_{HYS}. For this example variant a 2 % voltage threshold hysteresis was selected. Therefore, V_{MON} equals 34.3 V when the reset signal becomes deasserted.

There are inaccuracies that must be taken into consideration while adjusting voltage thresholds. Aside from the tolerance of the resistor divider, there is an internal resistance of the SENSE pin that can affect the accuracy of the resistor divider. Although expected to be very high impedance, users are recommended to calculate the values for the design specifications. The internal SENSE resistance (R_{SENSE}) can be calculated by the SENSE voltage (V_{SENSE}) divided by the SENSE current (I_{SENSE}) as shown in 式 9. V_{SENSE} can be calculated using 式 7 depending on the resistor divider and monitored voltage. I_{SENSE} can be calculated using 式 8.

$$I_{SENSE} = [(V_{MON} - V_{SENSE}) \div R_1] - (V_{SENSE} \div R_2) \tag{8}$$

$$R_{SENSE} = V_{SENSE} \div I_{SENSE} \tag{9}$$

Copyright © 2024 Texas Instruments Incorporated

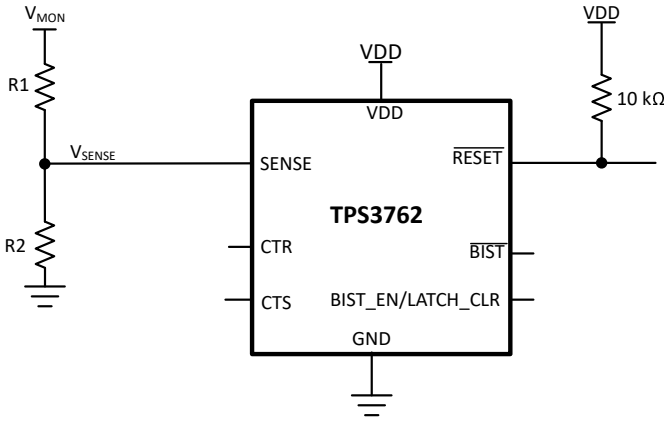

図 8-1. Adjustable Voltage Threshold with External Resistor Dividers

8.3 Typical Application

8.3.1 Design 1: SELV Power Supply Monitoring

This application is intended for the initial power stage in applications with 24 V SELV power rails. The TPS3762 utilizes high-voltage SENSE and V_{DD} inputs to monitor a 24 V SELV power rail.

図 8-6 illustrates an example of how the TPS3762 is monitoring the rail voltage while being powered by it, as well.

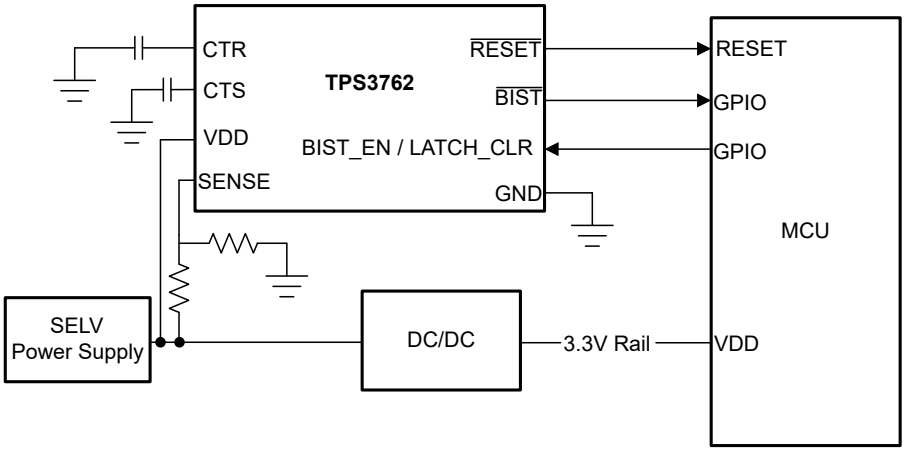

図 8-2. TPS3762 Overvoltage Supervisor with SELV Monitoring

8.3.1.1 Design Requirements

表 8-1. Design Parameters

PARAMETER	DESIGN REQUIREMENT
Voltage Threshold	Typical OV voltage threshold 30V.
Maximum Input Power	Operate with power supply input up to 65V
Output logic	Open-Drain
SENSE delay	>100ms
$\overline{\text{RESET}}$ delay	>300ms
Output Features	Output latching and built-in self-test

8.3.1.2 Detailed Design Procedure

The TPS3762 utilizes high-voltage SENSE and V_{DD} inputs to monitor a 24V SELV power rail.

In this design example TPS3762D02OVDDFR is used.

8.3.1.2.1 Setting Voltage Threshold

The positive-going threshold voltage, V_{ITP}, is set by the device variant. In this example, the nominal supply voltage from the SELV supply is 24 V. Setting a overvoltage threshold of 30 V (~25% buffer) makes sure that the device resets before supply voltage violates the allowed boundary. The adjustable voltage variant is chosen and R_1 and R_2 are adusted to meet the threshold. Assuming R_2 equal to 10 kΩ and R_1 is calculated as 365 kΩ. For additional information on selecting resistor values see セクション 8.2. TPS3762 also supports fixed voltage threshold variants. Threshold voltage decoding can be found in Device Decoder.

8.3.1.2.2 Meeting the Sense and Reset Delay

The TPS3762 features both reset assertion (sense) delay, t_{CTS}, and reset deassertion (reset) delay, t_{CTR}. The TPS3762 features two options for selecting sense and reset delays: fixed delays and capacitor-programmable delays. For the device variant used in this design, TPS3762D02OVDDFR, the capacitor programmable delay is chosen.セクション 7.3.5 and セクション 7.3.4 show how to set the timings for the capacitor-programmable delays. The application requires greater than 100 ms sense delay, thus a 0.033 µF capacitor is used. The application requires greater than 300 ms reset delay, thus a 0.1 µF capacitor is used.

8.3.1.2.3 Setting Supply Voltage

Setting the supply voltage is done by connecting the V_{DD} input directly to the 24V rail without the need for external circuitry. The device being able to handle 65 V on V_{DD} means the monitored voltage rail can handle any voltage transience up to 65 V. Good analog design practice recommends using a 0.1 µF capacitor on the V_{DD} pin.

8.3.1.2.4 Initiating Built-In Self-Test and Clearing Latch

Built-In Self-Test (BIST) is asserted on device power-up, as outlined in 図 7-7. BIST can also be initiated any time by a rising edge that crosses the voltage logic high input (V_{BIST_EN} or $V_{BIST_EN/LATCH_CLR}$ > 1.3 V) on the BIST_EN / LATCH_CLR pin, as outlined in 図 7-8. Output reset latching is set by the device variant. For the device variant used in this design, TPS3762D02OVDDFR, the output has latch. Device specific output reset latching feature can be found in #none#. In order to clear the latch a logic high input on the BIST_EN / LATCH_CLR pin is required. When clearing latch, BIST is initiated and the $\overline{\text{RESET}}$ returns logic level high once $t_{\overline{BIST}}$ + $t_{\overline{BIST}_recover}$ + t_{CTR} has expired, outlined in 図 7-6. While $V_{BIST_EN/LATCH_CLR}$ > 1.3 V, the device is in latch disabled mode and the $\overline{\text{RESET}}$ will not latch for OV and UV on SENSE pin. While the device is in latch disabled mode the $\overline{\text{RESET}}$ will still assert for OV and UV faults.

Copyright © 2024 Texas Instruments Incorporated

8.3.1.3 Application Curves

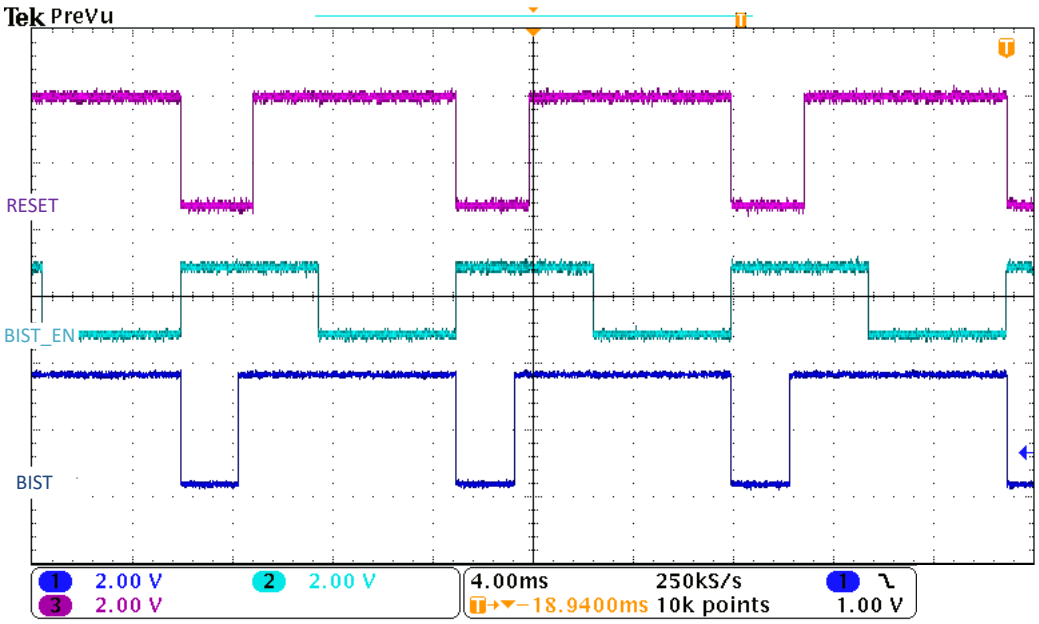

図 8-3. $\overline{\text{BIST}}$ with $\overline{\text{RESET}}$ Assertion Waveform

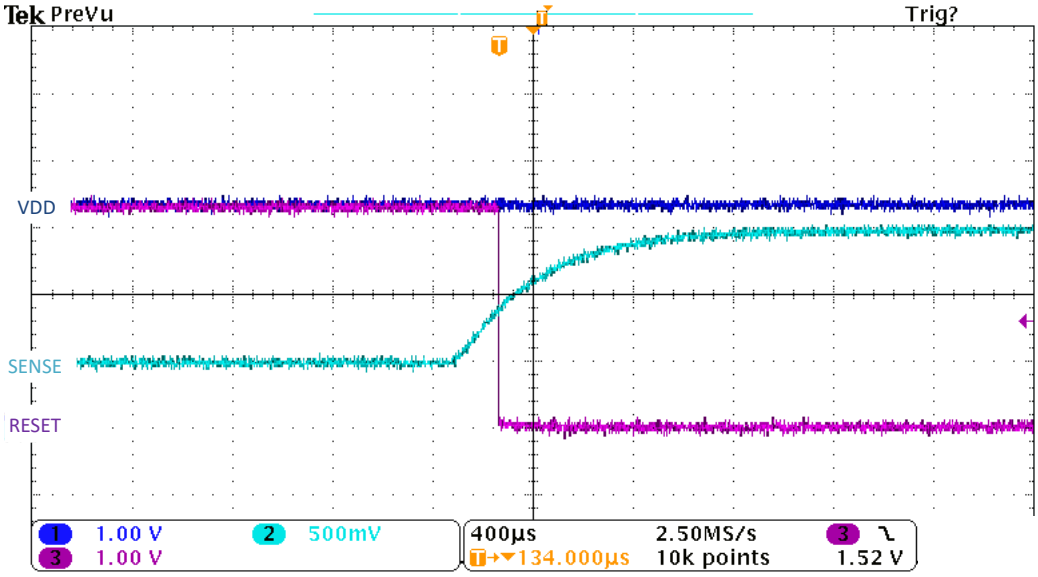

図 8-4. Overvoltage $\overline{\text{RESET}}$ Latching Waveform

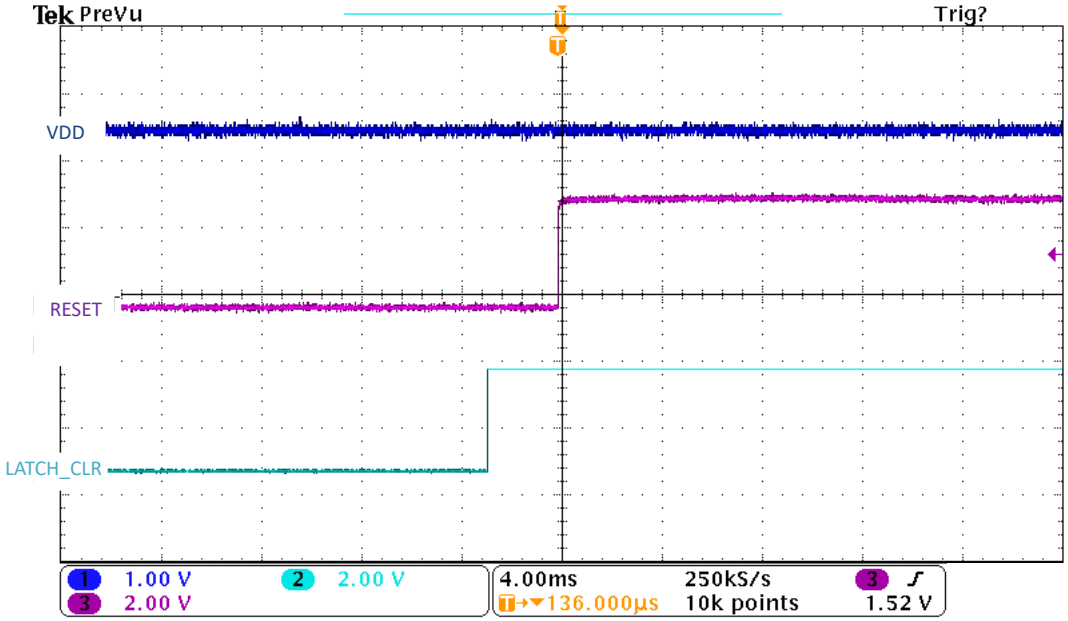

図 8-5. Overvoltage $\overline{\text{RESET}}$ Unlatching Waveform

Copyright © 2024 Texas Instruments Incorporated

8.4 Power Supply Recommendations

TPS3762 is designed to operate from an input supply with a V_{DD} voltage between 2.7 V (minimum operation) to 65 V (maximum operation). Good analog design practice recommends placing a minimum 0.1 µF ceramic capacitor as near as possible to the V_{DD} pin.

8.4.1 Power Dissipation and Device Operation

The permissible power dissipation for any package is a measure of the capability of the device to pass heat from the power source, the junctions of the IC, to the ultimate heat sink, the ambient environment. Thus, the power dissipation is dependent on the ambient temperature and the thermal resistance across the various interfaces between the die junction and ambient air.

The maximum continuous allowable power dissipation for the device in a given package can be calculated using 式 10:

$$P_{D\text{-}MAX} = ((T_{J\text{-}MAX} - T_A) / R_{\theta JA}) \quad (10)$$

The actual power being dissipated in the device can be represented by 式 11:

$$P_D = V_{DD} \times I_{DD} + p_{RESET} \quad (11)$$

p_{RESET} is calculated by 式 12 or 式 13

$$p_{RESET\ (PUSHPULL)} = VDD - V_{RESET} \times I_{RESET} \quad (12)$$

$$p_{RESET\ (OPEN\text{-}DRAIN)} = V_{RESET} \times I_{RESET} \quad (13)$$

式 10 and 式 11 establish the relationship between the maximum power dissipation allowed due to thermal consideration, the voltage drop across the device, and the continuous current capability of the device. These two equations should be used to determine the optimum operating conditions for the device in the application.

In applications where lower power dissipation (P_D) and/or excellent package thermal resistance ($R_{\theta JA}$) is present, the maximum ambient temperature ($T_{A\text{-}MAX}$) may be increased.

In applications where high power dissipation and/or poor package thermal resistance is present, the maximum ambient temperature ($T_{A\text{-}MAX}$) may have to be de-rated. $T_{A\text{-}MAX}$ is dependent on the maximum operating junction temperature ($T_{J\text{-}MAX\text{-}OP}$ = 125°C), the maximum allowable power dissipation in the device package in the application ($P_{D\text{-}MAX}$), and the junction-to ambient thermal resistance of the part/package in the application ($R_{\theta JA}$), as given by 式 14:

$$T_{A\text{-}MAX} = (T_{J\text{-}MAX\text{-}OP} - (R_{\theta JA} \times P_{D\text{-}MAX})) \quad (14)$$

8.5 Layout

8.5.1 Layout Guidelines

- Make sure that the connection to the VDD pin is low impedance. Good analog design practice is to place a greater than 0.1 µF ceramic capacitor as near as possible to the VDD pin.
- To further improve the noise immunity on the SENSE pins, placing a 10 nF to 100 nF capacitor between the SENSE pin and GND can reduce the sensitivity to transient voltages on the monitored signal.
- If a capacitor is used on CTS or CTR, place these components as close as possible to the respective pins. If the capacitor adjustable pins are left unconnected, make sure to minimize the amount of parasitic capacitance on the pins to less than 5 pF.
- Place the pull-up resistors on $\overline{RESET}$ as close to the pin as possible.
- When laying out metal traces, separate high voltage traces from low voltage traces as much as possible. If high and low voltage traces need to run close by, spacing between traces should be greater than 20 mils (0.5 mm).

- Do not have high voltage metal pads or traces closer than 20 mils (0.5 mm) to the low voltage metal pads or traces.

8.5.2 Layout Example

The layout example in 図 8-6 shows how the TPS3762 is laid out on a printed circuit board (PCB) with user-defined delays.

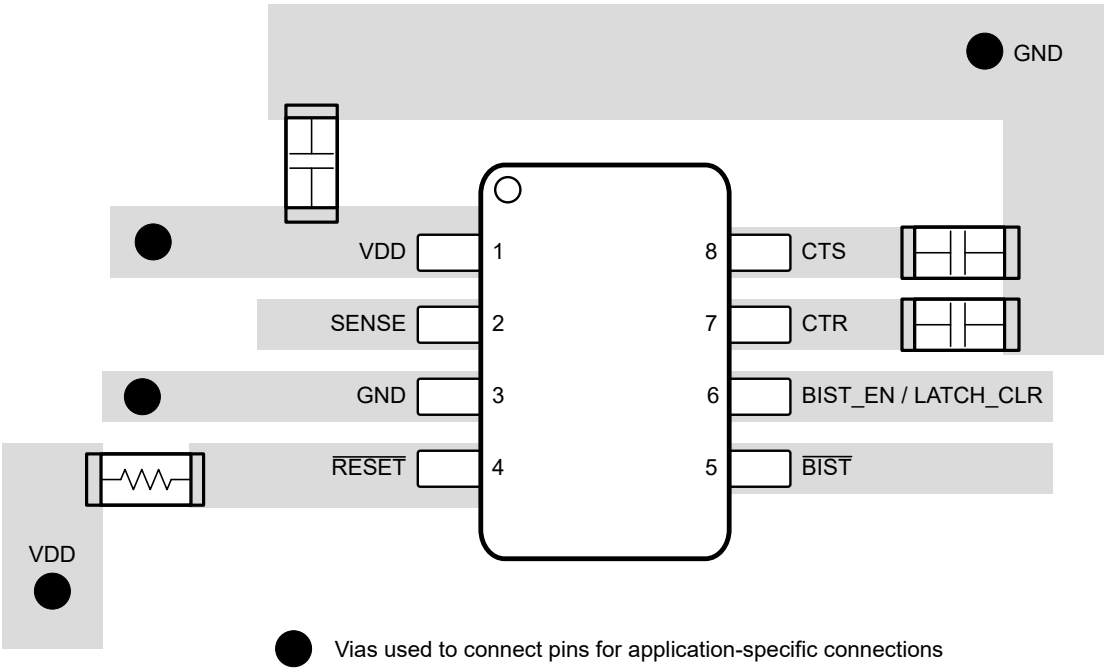

図 8-6. TPS3762 Recommended Layout

Copyright © 2024 Texas Instruments Incorporated

9 Device and Documentation Support

9.1 Device Nomenclature

Device Decoder in セクション 4 describe how to decode certain device function of the device based on its part number. Not all part numbers follow this nomenclature. Use 表 9-1 as the part number decoding table for all devices.

表 9-1. Device Configuration Table

ORDERABLE PART NAME	Overvoltage (V_{ITP})	Overvoltage Hysteresis	Undervoltage (V_{ITN})	Undervoltage Hysteresis	CTR / CTS	Latch / UVbypass	$\overline{BIST}$ $\overline{RESET}$Trigger
TPS3762D02OVDDFR	800mV	2%	N/A	N/A	ADJ / ADJ	Both Enabled	Yes

9.2 ドキュメントの更新通知を受け取る方法

ドキュメントの更新についての通知を受け取るには、www.tij.co.jp のデバイス製品フォルダを開いてください。[通知] をクリックして登録すると、変更されたすべての製品情報に関するダイジェストを毎週受け取ることができます。変更の詳細については、改訂されたドキュメントに含まれている改訂履歴をご覧ください。

9.3 サポート・リソース

テキサス・インスツルメンツ E2E™ サポート・フォーラムは、エンジニアが検証済みの回答と設計に関するヒントをエキスパートから迅速かつ直接得ることができる場所です。既存の回答を検索したり、独自の質問をしたりすることで、設計で必要な支援を迅速に得ることができます。

リンクされているコンテンツは、各寄稿者により「現状のまま」提供されるものです。これらはテキサス・インスツルメンツの仕様を構成するものではなく、必ずしもテキサス・インスツルメンツの見解を反映したものではありません。テキサス・インスツルメンツの使用条件を参照してください。

9.4 Trademarks

テキサス・インスツルメンツ E2E™ is a trademark of Texas Instruments.
すべての商標は、それぞれの所有者に帰属します。

9.5 静電気放電に関する注意事項

この IC は、ESD によって破損する可能性があります。テキサス・インスツルメンツは、IC を取り扱う際には常に適切な注意を払うことを推奨します。正しい取り扱いおよび設置手順に従わない場合、デバイスを破損するおそれがあります。

ESD による破損は、わずかな性能低下からデバイスの完全な故障まで多岐にわたります。精密な IC の場合、パラメータがわずかに変化するだけで公表されている仕様から外れる可能性があるため、破損が発生しやすくなっています。

9.6 用語集

テキサス・インスツルメンツ用語集　　この用語集には、用語や略語の一覧および定義が記載されています。

10 Revision History

資料番号末尾の英字は改訂を表しています。その改訂履歴は英語版に準じています。

Changes from Revision * (October 2023) to Revision A (December 2023) — **Page**

- 量産データのリリース 1

11 Mechanical, Packaging, and Orderable Information

The following pages include mechanical, packaging, and orderable information. This information is the most current data available for the designated devices. This data is subject to change without notice and revision of this document. For browser-based versions of this data sheet, refer to the left-hand navigation.

PACKAGING INFORMATION

Orderable part number	Status (1)	Material type (2)	Package | Pins	Package qty | Carrier	RoHS (3)	Lead finish/ Ball material (4)	MSL rating/ Peak reflow (5)	Op temp (°C)	Part marking (6)
TPS3762A10OVDDFR	Active	Production	SOT-23-THIN (DDF) | 8	3000 | LARGE T&R	Yes	NIPDAU	Level-1-260C-UNLIM	-40 to 125	62A10
TPS3762D02OVDDFR	Active	Production	SOT-23-THIN (DDF) | 8	3000 | LARGE T&R	Yes	NIPDAU	Level-1-260C-UNLIM	-40 to 125	62D02
TPS3762D02OVDDFR.A	Active	Production	SOT-23-THIN (DDF) | 8	3000 | LARGE T&R	Yes	NIPDAU	Level-1-260C-UNLIM	-40 to 125	62D02

(1) **Status:** For more details on status, see our product life cycle.

(2) **Material type:** When designated, preproduction parts are prototypes/experimental devices, and are not yet approved or released for full production. Testing and final process, including without limitation quality assurance, reliability performance testing, and/or process qualification, may not yet be complete, and this item is subject to further changes or possible discontinuation. If available for ordering, purchases will be subject to an additional waiver at checkout, and are intended for early internal evaluation purposes only. These items are sold without warranties of any kind.

(3) **RoHS values:** Yes, No, RoHS Exempt. See the TI RoHS Statement for additional information and value definition.

(4) **Lead finish/Ball material:** Parts may have multiple material finish options. Finish options are separated by a vertical ruled line. Lead finish/Ball material values may wrap to two lines if the finish value exceeds the maximum column width.

(5) **MSL rating/Peak reflow:** The moisture sensitivity level ratings and peak solder (reflow) temperatures. In the event that a part has multiple moisture sensitivity ratings, only the lowest level per JEDEC standards is shown. Refer to the shipping label for the actual reflow temperature that will be used to mount the part to the printed circuit board.

(6) **Part marking:** There may be an additional marking, which relates to the logo, the lot trace code information, or the environmental category of the part.

Multiple part markings will be inside parentheses. Only one part marking contained in parentheses and separated by a "~" will appear on a part. If a line is indented then it is a continuation of the previous line and the two combined represent the entire part marking for that device.

Important Information and Disclaimer: The information provided on this page represents TI's knowledge and belief as of the date that it is provided. TI bases its knowledge and belief on information provided by third parties, and makes no representation or warranty as to the accuracy of such information. Efforts are underway to better integrate information from third parties. TI has taken and continues to take reasonable steps to provide representative and accurate information but may not have conducted destructive testing or chemical analysis on incoming materials and chemicals. TI and TI suppliers consider certain information to be proprietary, and thus CAS numbers and other limited information may not be available for release.

In no event shall TI's liability arising out of such information exceed the total purchase price of the TI part(s) at issue in this document sold by TI to Customer on an annual basis.

OTHER QUALIFIED VERSIONS OF TPS3762 :

- Automotive : TPS3762-Q1

NOTE: Qualified Version Definitions:

- Automotive - Q100 devices qualified for high-reliability automotive applications targeting zero defects

TAPE AND REEL INFORMATION

REEL DIMENSIONS

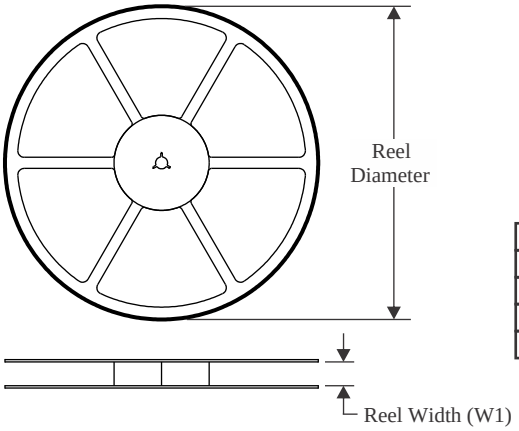

TAPE DIMENSIONS

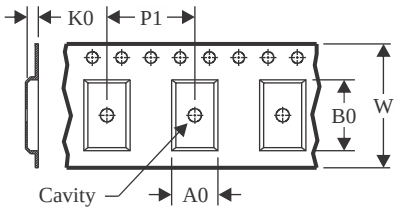

A0	Dimension designed to accommodate the component width
B0	Dimension designed to accommodate the component length
K0	Dimension designed to accommodate the component thickness
W	Overall width of the carrier tape
P1	Pitch between successive cavity centers

QUADRANT ASSIGNMENTS FOR PIN 1 ORIENTATION IN TAPE

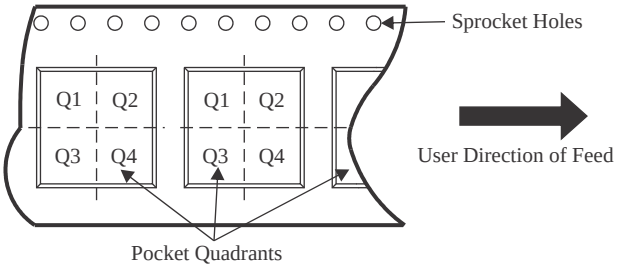

*All dimensions are nominal

Device	Package Type	Package Drawing	Pins	SPQ	Reel Diameter (mm)	Reel Width W1 (mm)	A0 (mm)	B0 (mm)	K0 (mm)	P1 (mm)	W (mm)	Pin1 Quadrant
TPS3762A10OVDDFR	SOT-23-THIN	DDF	8	3000	180.0	8.4	3.2	3.2	1.4	4.0	8.0	Q3
TPS3762D02OVDDFR	SOT-23-THIN	DDF	8	3000	180.0	8.4	3.2	3.2	1.4	4.0	8.0	Q3

TAPE AND REEL BOX DIMENSIONS

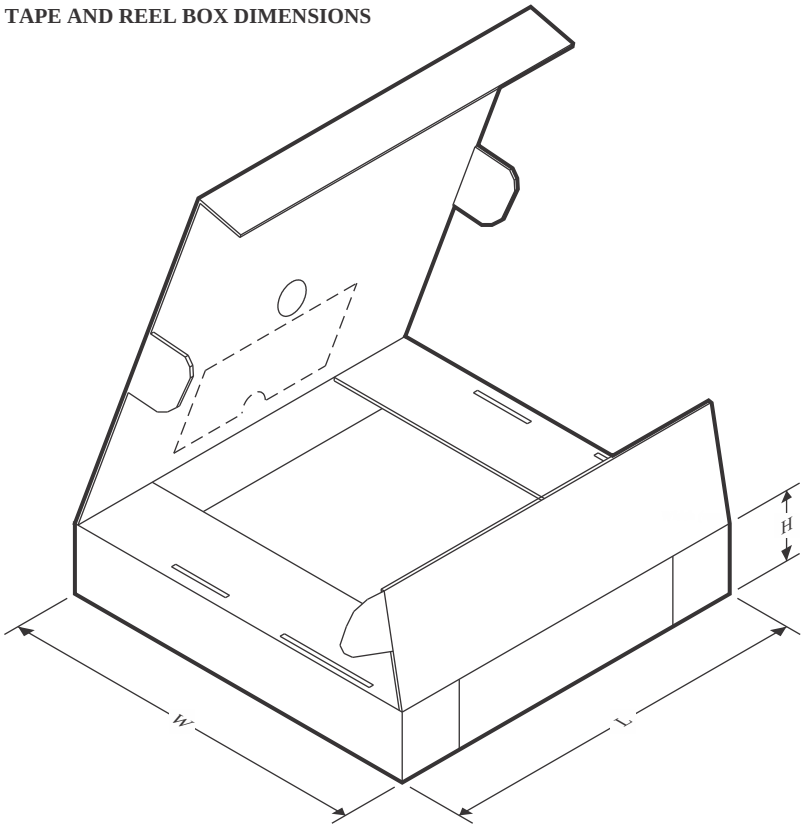

*All dimensions are nominal

Device	Package Type	Package Drawing	Pins	SPQ	Length (mm)	Width (mm)	Height (mm)
TPS3762A10OVDDFR	SOT-23-THIN	DDF	8	3000	210.0	185.0	35.0
TPS3762D02OVDDFR	SOT-23-THIN	DDF	8	3000	210.0	185.0	35.0

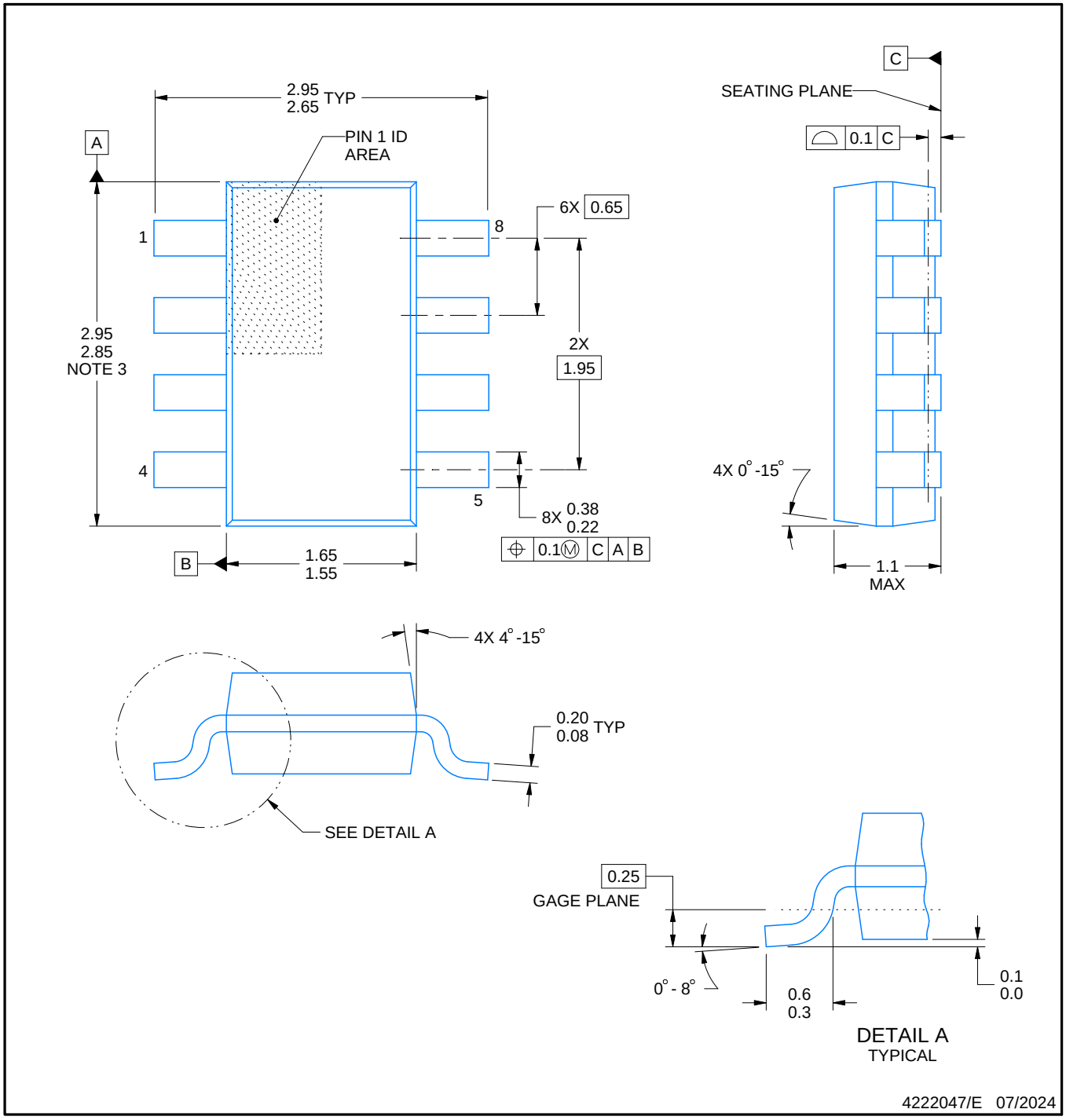

NOTES:

1. All linear dimensions are in millimeters. Any dimensions in parenthesis are for reference only. Dimensioning and tolerancing per ASME Y14.5M.
2. This drawing is subject to change without notice.
3. This dimension does not include mold flash, protrusions, or gate burrs. Mold flash, protrusions, or gate burrs shall not exceed 0.15 mm per side.

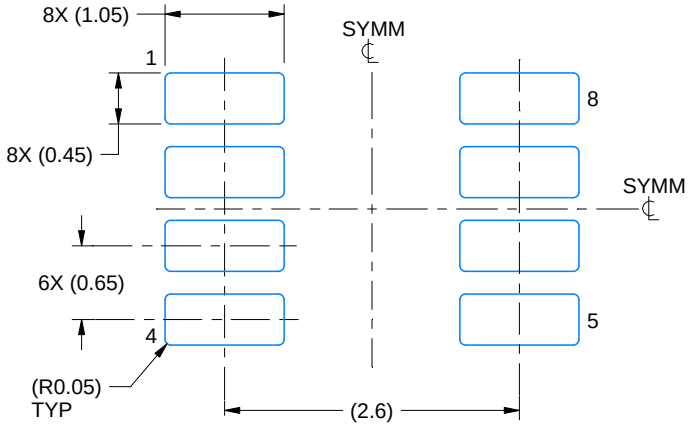

LAND PATTERN EXAMPLE
EXPOSED METAL SHOWN
SCALE:15X

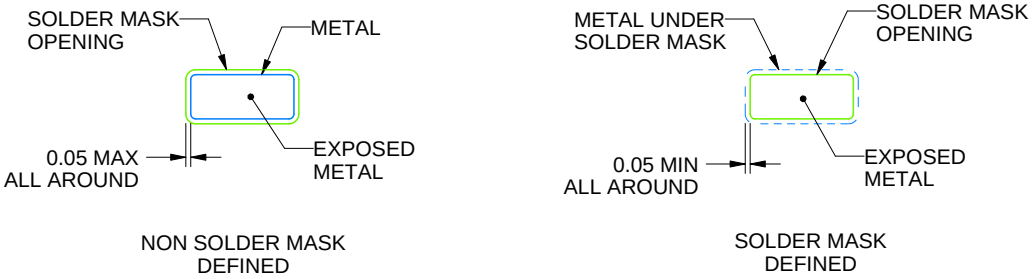

SOLDER MASK DETAILS

4222047/E 07/2024

NOTES: (continued)

4. Publication IPC-7351 may have alternate designs.
5. Solder mask tolerances between and around signal pads can vary based on board fabrication site.

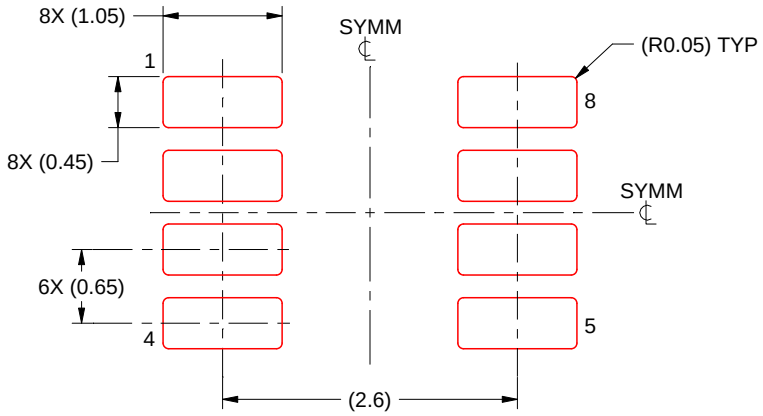

SOLDER PASTE EXAMPLE
BASED ON 0.125 mm THICK STENCIL
SCALE:15X

4222047/E 07/2024

NOTES: (continued)

6. Laser cutting apertures with trapezoidal walls and rounded corners may offer better paste release. IPC-7525 may have alternate design recommendations.
7. Board assembly site may have different recommendations for stencil design.

重要なお知らせと免責事項

TI は、技術データと信頼性データ (データシートを含みます)、設計リソース (リファレンス デザインを含みます)、アプリケーションや設計に関する各種アドバイス、Web ツール、安全性情報、その他のリソースを、欠陥が存在する可能性のある「現状のまま」提供しており、商品性および特定目的に対する適合性の黙示保証、第三者の知的財産権の非侵害保証を含むいかなる保証も、明示的または黙示的にかかわらず拒否します。

これらのリソースは、TI 製品を使用する設計の経験を積んだ開発者への提供を意図したものです。(1) お客様のアプリケーションに適した TI 製品の選定、(2) お客様のアプリケーションの設計、検証、試験、(3) お客様のアプリケーションに該当する各種規格や、その他のあらゆる安全性、セキュリティ、規制、または他の要件への確実な適合に関する責任を、お客様のみが単独で負うものとします。

上記の各種リソースは、予告なく変更される可能性があります。これらのリソースは、リソースで説明されている TI 製品を使用するアプリケーションの開発の目的でのみ、TI はその使用をお客様に許諾します。これらのリソースに関して、他の目的で複製することや掲載することは禁止されています。TI や第三者の知的財産権のライセンスが付与されている訳ではありません。お客様は、これらのリソースを自身で使用した結果発生するあらゆる申し立て、損害、費用、損失、責任について、TI およびその代理人を完全に補償するものとし、TI は一切の責任を拒否します。

TI の製品は、 TI の販売条件 、 TI の総合的な品質ガイドライン 、 ti.com または TI 製品などに関連して提供される他の適用条件に従い提供されます。TI がこれらのリソースを提供することは、適用される TI の保証または他の保証の放棄の拡大や変更を意味するものではありません。 TI がカスタム、またはカスタマー仕様として明示的に指定していない限り、TI の製品は標準的なカタログに掲載される汎用機器です。

お客様がいかなる追加条項または代替条項を提案する場合も、TI はそれらに異議を唱え、拒否します。

Copyright © 2026, Texas Instruments Incorporated

最終更新日：2025 年 10 月