TPS4813-Q1 100V、低 I_Q、車載用ハイサイド ドライバ、低消費電力モードおよび可変負荷ウェークアップ トリガ付き

1 特長

- AEC-Q100 車載グレード 1 温度認定済み
  - デバイス温度グレード 1:動作時周囲温度範囲 -40℃～+125℃
- 機能安全対応
  - 機能安全システムの設計に役立つ資料を利用可能
- 3.5V～95V の入力範囲 (絶対最大定格 100V)
- 最低 –65V までの逆入力保護
- 内蔵 11V チャージ ポンプ
- 低い静止電流、低消費電力モード ($\overline{LPM}$ = Low) で 35µA
- 低いシャットダウン電流 (EN/UVLO = LOW):1µA
- 強力なゲートドライブ (G1PU/G1PD:1.69A ソース および 2A シンク)
- 調整可能な応答時間 (TMR) とフォルト フラグ出力 ($\overline{FLT}$) を備えた調整可能な過電流保護機能 (ISCP)
- ウェイク通知により、低消費電力モードからアクティブ モードへ高速遷移
  - 外部 $\overline{LPM}$ トリガ (Low から High) による、低消費電力パスからメイン パスへの切り替え時間 8µs
  - 調整可能な負荷ウェークアップ スレッショルド (I_{LWU}) で、低消費電力パスからメイン パスへの切り替え (6µs)
- 短絡フォルト、チャージ ポンプ低電圧、入力低電圧時のフォルト通知 ($\overline{FLT}$)
- 調整可能な入力低電圧誤動作防止 (UVLO)
- 短絡コンパレータ診断 (SCP_TEST)

2 アプリケーション

- 車載用 48V リチウムイオン
- パワー ディストリビューション ボックス

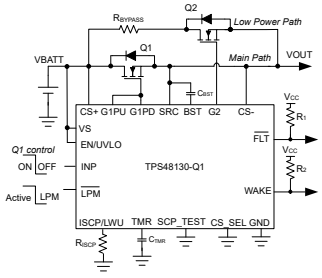

常時オンの車載用 eFuse

3 概要

TPS48130-Q1 は、保護および診断機能を備えた、100V、低 I_Q スマート ハイサイド ドライバです。本デバイスは、動作電圧範囲が 3.5V～95V と広いため、12V、24V、48V のシステム設計に適しています。このデバイスは、最低 -65V の負の電源電圧に耐えられ、負荷を保護できます。

TPS48130-Q1 は、2 つのゲートドライブを備えており、1 つはメイン パスの MOSFET を駆動するための 1.69A ソースおよび 2A シンク能力、もう 1 つは低消費電力パスのための 165µA ソースおよび 2A シンク能力です。

$\overline{LPM}$ = Low の低消費電力モードでは、低消費電力パスの FET をオン状態に維持し、メイン FET をオフにします。このモードでは、デバイスが消費するのは、35µA (標準値) という低い I_Q です。アクティブ状態に移行する自動負荷ウェークアップ スレッショルドは、ISCP/LWU ピンを使用して調整できます。EN/UVLO が Low のとき、I_Q は 1µA (代表値) まで減少します。

このデバイスは、MOSFET VDS センシング、または外付けの R_{SNS} 抵抗を使用して、短絡保護を調整可能です 。自動リトライおよびラッチオフ フォルト動作は設定可能です。このデバイスは、SCP_TEST 入力の外部制御を使用した、内蔵の短絡コンパレータを診断する機能も備えています。

TPS48130-Q1 は、19 ピンの VSSOP パッケージで供給されます。

パッケージ情報

部品番号	パッケージ (1)	パッケージ サイズ(2)
TPS48130-Q1	DGX (VSSOP、19)	5.1mm × 3.0mm

(1) 利用可能なすべてのパッケージについては、データシートの末尾にある注文情報を参照してください。
(2) パッケージ サイズ (長さ × 幅) は公称値で、該当する場合はピンも含まれます。

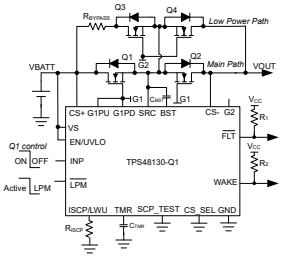

常時オンの車載用 eFuse でバック ツー バック FET を駆動

このリソースの元の言語は英語です。翻訳は概要を便宜的に提供するもので、自動化ツール (機械翻訳) を使用していることがあり、TI では翻訳の正確性および妥当性につきましては一切保証いたしません。実際の設計などの前には、ti.com で必ず最新の英語版をご参照くださいますようお願いいたします。

Table of Contents

1 特長.....1
2 アプリケーション.....1
3 概要.....1
4 Pin Configuration and Functions.....3
5 Specifications.....5
5.1 Absolute Maximum Ratings.....5
5.2 ESD Ratings.....5
5.3 Recommended Operating Conditions.....5
5.4 Thermal Information.....6
5.5 Electrical Characteristics.....6
5.6 Switching Characteristics.....7
5.7 Typical Characteristics.....9
6 Parameter Measurement Information.....11
7 Detailed Description.....13
7.1 Overview.....13
7.2 Functional Block Diagram.....13
7.3 Feature Description.....14
7.4 Device Functional Modes.....23
8 Application and Implementation.....28
8.1 Application Information.....28
8.2 Typical Application 1: Driving Power At All Times (PAAT) Loads With Automatic Load Wakeup.....28
8.3 Typical Application 2: Driving Power At All Times (PAAT) Loads With Automatic Load Wakeup and Output Bulk Capacitor Charging.....33
8.4 TIDA-020065: Automotive Smart Fuse Reference Design Driving Power At All Times (PAAT) Loads With Automatic Load Wakeup, Output Bulk Capacitor Charging, Bi-directional Current Sensing and Software I^2t.....36
8.5 Power Supply Recommendations.....37
8.6 Layout.....38
9 Device and Documentation Support.....40
9.1 ドキュメントの更新通知を受け取る方法.....40
9.2 サポート・リソース.....40
9.3 Trademarks.....40
9.4 静電気放電に関する注意事項.....40
9.5 用語集.....40
10 Revision History.....40
11 Mechanical, Packaging, and Orderable Information.....40

Copyright © 2025 Texas Instruments Incorporated

4 Pin Configuration and Functions

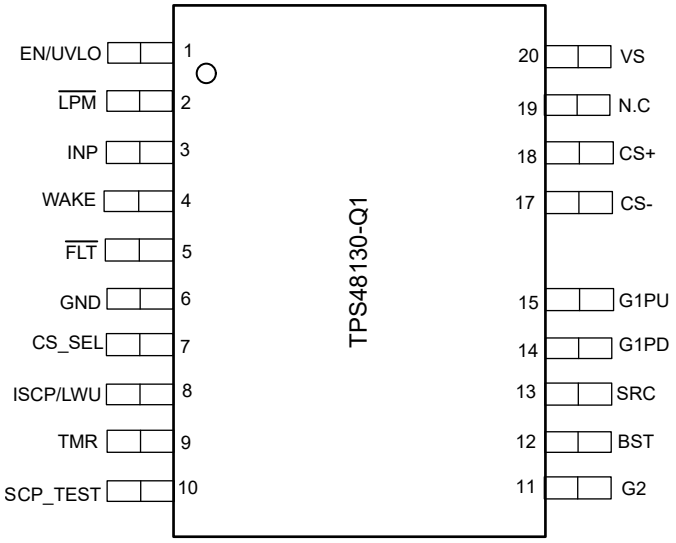

図 4-1. DGX Package, VSSOP 19-Pin (Top View)

表 4-1. Pin Functions

PIN		TYPE(1)	DESCRIPTION
NAME	NO.		
EN/UVLO	1	I	EN/UVLO input. A voltage on this pin above $V_{(ENR)}$ enables normal operation. If EN/UVLO is below $V_{(ENF)}$ then gate drives are turned OFF and $\overline{FLT}$ asserts low. Forcing this pin below $V_{(ENF)}$ (0.3V) shuts down the device reducing quiescent current. Optionally connect to the input supply through a resistive divider to set the undervoltage lockout. When EN/UVLO is left floating an internal pulldown of 100nA pulls EN/UVLO low and keeps the device in OFF state.
$\overline{LPM}$	2	I	Low power mode input. When driven high, the devices enter into active mode. When driven low, the devices enter into low power mode. $\overline{LPM}$ has an internal weak pull down of 100nA to GND to keep G2 high when $\overline{LPM}$ is left floating.
INP	3	I	Input signal for external FET control. CMOS compatible input reference to GND that sets the state of G1PD and G1PU pins. INP has an internal weak pull down of 100nA to GND to keep G1PD pulled to SRC when INP is left floating.
WAKE	4	O	Open drain wake output. This pin asserts low when the device enters into active mode (when $\overline{LPM}$ is driven high or when a load wake up event has occurred).
$\overline{FLT}$	5	O	Open drain fault output. This pin asserts low during short circuit fault, charge pump UVLO, input UVLO and during SCP comparator diagnosis. If $\overline{FLT}$ feature is not desired then connect it to GND.
GND	6	G	Connect GND to system ground.
CS_SEL	7	—	Reserved for future use. Connect to GND.
ISCP/LWU	8	I	Short circuit detection and load wakeup threshold setting. SCP control for G1 during active mode ($\overline{LPM}$ = high) and load wakeup control on G2 during low power mode ($\overline{LPM}$ = low).
TMR	9	I	Fault timer input. A capacitor across TMR pin to GND sets the times for fault turnoff. Leave it open for fastest setting (<10µs). Connect ISCP/LWU and TMR pin to GND to disable overcurrent protection.

Copyright © 2025 Texas Instruments Incorporated

表 4-1. Pin Functions (続き)

PIN		TYPE(1)	DESCRIPTION
NAME	NO.		
SCP_TEST	10	I	Internal short circuit comparator (SCP) diagnosis input. When SCP_TEST is driven low to high with INP pulled high, the internal SCP comparator operation is checked. $\overline{FLT}$ goes low and G1PD gets pulled to SRC if SCP comparator is functional. Connect SCP_TEST pin to GND if this feature is not desired. SCP_TEST has an internal weak pull down of 100nA to GND.
G2	11	O	Low power mode FET gate drive output. It has 165µA pullup and 2A sink capacity.
BST	12	O	High side bootstrapped supply. An external capacitor with a minimum value of $>Q_{g(tot)}$ of the external FET must be connected between this pin and SRC.
SRC	13	O	Source connection of the external FET.
G1PD	14	O	High current gate driver pulldown. This pin pulls down to SRC. For the fastest turnoff, tie this pin directly to the gate of the external high side MOSFET.
G1PU	15	O	High current gate driver pullup. This pin pulls up to BST. Connect this pin to G1PD for maximum gate drive transition speed. A resistor can be connected between this pin and the gate of the external MOSFET to control the in-rush current during turnon.
CS-	17	I	Current sense negative input.
CS+	18	I	Current sense positive input.
N.C	19	—	No connect.
VS	20	P	Supply pin of the controller.

(1) I = input, O = output, I/O = input and output, P = power, G = ground

Copyright © 2025 Texas Instruments Incorporated

5 Specifications

5.1 Absolute Maximum Ratings

over operating free-air temperature range (unless otherwise noted)(1)

		MIN	MAX	UNIT
Input Pins	VS, CS+, CS– to GND	–65	100	V
	SRC to GND	–65	100	
	G1PU, G1PD, G2, BST to SRC	–0.3	19	
	ISCP/LWU, TMR, SCP_TEST to GND	–0.3	5.5	
	EN/UVLO, $\overline{LPM}$, INP, CS_SEL, $V_{(VS)}$ > 0 V	–1	70	
	EN/UVLO, $\overline{LPM}$, INP, CS_SEL, $V_{(VS)}$ ≤ 0 V	$V_{(VS)}$	(70 + $V_{(VS)}$)	
	CS+ to CS–	–1	100	V
	$\overline{FLT}$, WAKE to GND	–1	20	V
Sink current	$I_{(\overline{FLT})}$, $I_{(WAKE)}$		10	mA
	$I_{(CS+)}$, $I_{(CS–)}$, 1msec	–100	100	mA
Output Pins	G1PU, G1PD, G2, BST to GND	–65	112	V
Operating junction temperature, T_j (2)		–40	150	°C
Storage temperature, T_{stg}		–55	150	

(1) Operation outside the Absolute Maximum Ratings may cause permanent device damage. Absolute Maximum Ratings do not imply functional operation of the device at these or any other conditions beyond those listed under Recommended Operating Conditions. If used outside the Recommended Operating Conditions but within the Absolute Maximum Ratings, the device may not be fully functional, and this may affect device reliability, functionality, performance, and shorten the device lifetime.
(2) High junction temperatures degrade operating lifetimes. Operating lifetime is de-rated for junction temperatures greater than 125°C.

5.2 ESD Ratings

				VALUE	UNIT
$V_{(ESD)}$	Electrostatic discharge	Human body model (HBM), per AEC Q100-002(1)		±2000	V
		Charged device model (CDM), per AEC Q100-011	Corner pins (EN/UVLO, VS, SCP_TEST, G2)	±750	
			Other pins	±500	

(1) AEC Q100-002 indicates that HBM stressing shall be in accordance with the ANSI/ESDA/JEDEC JS-001 specification.

5.3 Recommended Operating Conditions

over operating free-air temperature range (unless otherwise noted)(1)

		MIN	NOM	MAX	UNIT
Input Pins	VS to GND	3.5		95	V
	Minimum voltage on VS pin for Short Circuit Protection	4			
	EN/UVLO, INP, $\overline{LPM}$ to GND	0		65	
Output Pins	$\overline{FLT}$, WAKE to GND	0		15	V
External Capacitor	VS, SRC to GND	22			nF
	BST to SRC	0.1			µF
Tj	Operating Junction temperature(2)	–40		150	°C

(1) Recommended Operating Conditions are conditions under which the device is intended to be functional. For specifications and test conditions, see Electrical Characteristics.
(2) High junction temperatures degrade operating lifetimes. Operating lifetime is de-rated for junction temperatures greater than 125°C.

Copyright © 2025 Texas Instruments Incorporated

5.4 Thermal Information

THERMAL METRIC(1)		TPS4813-Q1 DGX 19 PINS	UNIT
$R_{\theta JA}$	Junction-to-ambient thermal resistance	92.3	°C/W
$R_{\theta JC(top)}$	Junction-to-case (top) thermal resistance	28.6	°C/W
$R_{\theta JB}$	Junction-to-board thermal resistance	47.5	°C/W
Ψ_{JT}	Junction-to-top characterization parameter	0.6	°C/W
Ψ_{JB}	Junction-to-board characterization parameter	47.2	°C/W

(1) For more information about traditional and new thermal metrics, see the Semiconductor and IC Package Thermal Metrics application report.

5.5 Electrical Characteristics

T_J = –40 °C to +125°C. $V_{(VS)}$ = 12 V, $V_{(BST-SRC)}$ = 11 V

PARAMETER		TEST CONDITIONS	MIN	TYP	MAX	UNIT
SUPPLY VOLTAGE						
VS	Operating input voltage		3.5		95	V
$V_{(S_PORR)}$	Input supply POR threshold, rising		1.86	2.55	3.29	V
$V_{(S_PORF)}$	Input supply POR threshold, falling		1.73	2.36	3.02	V
$I_{(Q)}$	Total System Quiescent current, $I_{(GND)}$ in Active mode	$V_{(EN/UVLO)}$ = $V_{(\overline{LPM})}$ = 2 V		43	55	µA
	Total System Quiescent current, $I_{(GND)}$ in low power mode	$V_{(EN/UVLO)}$ = 2 V, $V_{(\overline{LPM})}$ = 0 V		35	44	µA
		$V_{(EN/UVLO)}$ = 2 V, $V_{(\overline{LPM})}$ = 0 V, –40°C ≤ T_J ≤ +85°C			43	µA
$I_{(SHDN)}$	SHDN current, $I_{(GND)}$	$V_{(EN/UVLO)}$ = 0 V, $V_{(SRC)}$ = 0 V		1	3.3	µA
$I_{(REV)}$	$I_{(VS)}$ leakage current during Reverse Polarity	$V_{(VS)}$ = – 40 V	11	13	23	µA
ENABLE, UNDERVOLTAGE LOCKOUT (EN/UVLO), SHORT CIRCUIT COMPARATOR TEST (SCP_TEST) INPUT						
$V_{(UVLOR)}$	UVLO threshold voltage, rising		1.176	1.23	1.287	V
$V_{(UVLOF)}$	UVLO threshold voltage, falling		1.06	1.13	1.184	V
$V_{(ENR)}$	Enable threshold voltage for low Iq shutdown, rising				1	V
$V_{(ENF)}$	Enable threshold voltage for low Iq shutdown, falling		0.3			V
$I_{(EN/UVLO)}$	Enable input leakage current	$V_{(EN/UVLO)}$ = 12 V		180	309	nA
$V_{(SCP_TEST_H)}$	SCP test mode rising threshold				2	V
$V_{(SCP_TEST_L)}$	SCP test mode falling threshold		0.8			V
$I_{(SCP_TEST)}$	SCP_TEST input leakage current			90	700	nA
CHARGE PUMP (BST–SRC)						
$I_{(BST)}$	Charge Pump Supply current	$V_{(BST-SRC)}$ = 10 V, $V_{(EN/UVLO)}$ = 2 V	196	345	484	µA
$V_{(BST_UVLOR)}$	$V_{(BST-SRC)}$ UVLO voltage threshold, rising	$V_{(EN/UVLO)}$ = 2 V	8.1	9	9.9	V
$V_{(BST_UVLOF)}$	$V_{(BST-SRC)}$ UVLO voltage threshold, falling	$V_{(EN/UVLO)}$ = 2 V	7.3	8.2	8.9	V
$V_{(BST-SRC_ON)}$	Charge Pump Turn ON voltage	$V_{(EN/UVLO)}$ = 2 V	9.3	10.3	11.4	V
$V_{(BST-SRC_OFF)}$	Charge Pump Turn OFF voltage	$V_{(EN/UVLO)}$ = 2 V	10.4	11.6	12.8	V
$V_{(BST-SRC)}$	Charge Pump Voltage at $V_{(VS)}$ = 3.5 V	$V_{(EN/UVLO)}$ = 2 V	9.1	10.5	11.62	V
$V_{(G1_GOOD)}$	G1 Good rising threshold		5.5	7	8.3	V
$V_{(G2_GOOD)}$	G2 Good rising threshold		5.5	7	8.3	V

Copyright © 2025 Texas Instruments Incorporated

5.5 Electrical Characteristics (続き)

T_J = –40 ℃ to +125℃. $V_{(VS)}$ = 12 V, $V_{(BST-SRC)}$ = 11 V

PARAMETER		TEST CONDITIONS	MIN	TYP	MAX	UNIT
GATE DRIVER OUTPUTS (G1PU, G1PD, G2)						
$I_{(G2)}$	G2 Source Current		134	165	189	µA
$I_{(G2)}$	G2 Peak Sink Current			2		A
$I_{(G1PU)}$	Peak Source Current			1.69		A
$I_{(G1PD)}$	Peak Sink Current			2		A
SHORT CIRCUIT PROTECTION AND LOAD WAKE UP THRESHOLD (ISCP/LWU)						
$I_{SCP/LWU}$	SCP/LWU Input Bias current		8.4	10	12.33	µA
$V_{(SCP_HS)}$	SCP threshold for HS configuration	$V_{(ISCP)}$ = 1.405 V, CS_SEL = 0 V	277	300	332	mV
$V_{(SCP/LWU)}$	SCP/LWU threshold	$R_{(ISCP/LWU)}$ = 140.5 kΩ		300		mV
		$R_{(ISCP/LWU)}$ = 28 kΩ	60	75	90	mV
		$R_{(ISCP/LWU)}$ = 10.5 kΩ	32	40	48	mV
		$R_{(ISCP/LWU)}$ = 500 Ω	15	20	25	mV
		$R_{(ISCP/LWU)}$ = Open			757	mV
DELAY TIMER (TMR)						
$I_{(TMR_SRC_CB)}$	TMR source current		67	87	104	µA
$I_{(TMR_SRC_FLT)}$	TMR source current		1.4	2.73	3.8	µA
$I_{(TMR_SNK)}$	TMR sink current		2.17	2.8	3.4	µA
$V_{(TMR_SC)}$			0.93	1.1	1.2	V
$V_{(TMR_LOW)}$			0.15	0.21	0.25	V
$N_{(A-R\ Count)}$				32		
INPUT CONTROLS (INP, $\overline{LPM}$), FAULT ($\overline{FLT}$) & WAKE FLAG (WAKE)						
$R_{(\overline{FLT})}$, $R_{(WAKE)}$	$\overline{FLT}$, WAKE Pull-down resistance		53	82	106.6	Ω
$I_{(\overline{FLT})}$, $I_{(WAKE)}$	$\overline{FLT}$, WAKE Input leakage current	0 V ≤ $V_{(\overline{FLT})}$ ≤ 20 V			410	nA
$V_{(INP_H)}$, $V_{(\overline{LPM}_H)}$					2	V
$V_{(INP_L)}$, $V_{(\overline{LPM}_L)}$			0.8			V
$I_{(INP)}$, $I_{(\overline{LPM})}$	INP, $\overline{LPM}$ Input leakage current			89	206	nA

5.6 Switching Characteristics

T_J = –40 ℃ to +125℃. $V_{(VS)}$ = 12 V, $V_{(BST-SRC)}$ = 11 V

PARAMETER		TEST CONDITIONS	MIN	TYP	MAX	UNIT
$t_{G1PU(INP_H)}$	INP Turn ON propogation Delay	INP ↑ to G1PU ↑, C_L = 47 nF	0.45		1.53	µs
$t_{G1PD(INP_L)}$	INP Turn OFF propogation Delay	INP ↓ to G1PD ↓, C_L = 47 nF		0.24	0.6	µs
$t_{G2_ON(\overline{LPM})}$	Active mode to LPM mode transition delay, G2 ON	$\overline{LPM}$ ↓ to G2 ↑		6.4		µs
$t_{G1_OFF(\overline{LPM})}$	Active mode to LPM mode transition delay, G1 OFF	$\overline{LPM}$ ↓, G2 ↑ (above $V_{(G2_GOOD)}$) to G1 ↓, WAKE ↑, $C_{L(G1)}$ = 47 nF		3.5		µs
$t_{G2(WAKE_\overline{LPM})}$	LPM Mode to Active mode transition delay with $\overline{LPM}$ trigger	$\overline{LPM}$ ↑, G1 ↑ (above $V_{(G1_GOOD)}$) to G2 ↓, WAKE ↓, $C_{L(G2)}$ = 47 nF, $V_{(\overline{LPM})}$ = 0 V		6.6		µs
$t_{G1(WAKE_\overline{LPM})}$	LPM Mode to Active mode transition delay with $\overline{LPM}$ trigger	$\overline{LPM}$ ↑ to G1 ↑, C_L = 47 nF	2	4.5	7.2	µs
$t_{G2(WAKE_LWU)}$	LPM Mode to Active mode transition delay (G2 OFF) during Load wakeup	$V_{(CS+-CS-)}$ ↑ $V_{(SCP/LWU)}$, G1 ↑ (above $V_{(G1_GOOD)}$) to G2 ↓, WAKE ↓, C_L = 47 nF, $V_{(\overline{LPM})}$ = 0 V		6.9		µs

Copyright © 2025 Texas Instruments Incorporated

5.6 Switching Characteristics (続き)

T_J = –40 ℃ to +125℃. $V_{(VS)}$ = 12 V, $V_{(BST-SRC)}$ = 11 V

PARAMETER		TEST CONDITIONS	MIN	TYP	MAX	UNIT
$t_{G1(WAKE_LWU)}$	LPM Mode to Active mode transition delay (G1 ON) during Load wakeup	$V_{(CS+–CS–)}$ ↑ $V_{(SCP/LWU)}$ to G1 ↑, C_L = 47 nF, $V_{(\overline{LPM})}$ = 0 V			3	µs
$t_{PD(EN_OFF)}$	EN Turn OFF Propogation Delay	EN ↓ to G1PD ↓, C_L = 47 nF	2.2	4.6	6	µs
$t_{PD(UVLO_OFF)}$	UVLO Turn OFF Propogation Delay	UVLO ↓ to G1PD ↓ and $\overline{FLT}$ ↓, C_L = 47 nF	2.8	4.4	6	µs
$t_{PD(VS_OFF)}$	PD Turn OFF delay during input supply (VS) interruption	VS ↓ (cross VPORF) to G1PD ↓, C_L = 47 nF, INP = EN/UVLO = 2 V	25	42	69.5	µs
$t_{PU(VS_ON)}$	PU Turn ON delay during input supply (VS) recovery	VS ↑ (cross VPORR) to PU ↑, C_L = 47nF, INP = EN/UVLO = 2 V, V, $V_{(BST–SRC)}$ > $V_{(BST_UVLOR)}$	220		657	µs
t_{SC}	Hard Short-circuit protection propogation delay	$V_{(CS+–CS–)}$ ↑ $V_{(SCP/LWU)}$ to G1PD ↓, CL = 47 nF, $C_{(TMR)}$ = Open, LPM = 2 V			4	µs
t_{SC_PUS}	Short-circuit protection propogation delay during power up with output short circuit	C_{TMR} = Open			10	µs
$t_{PD(\overline{FLT}_SC)}$	$\overline{FLT}$ assertion delay during short circuit	$V_{(CS+–CS–)}$ ↑ $V_{(SCP/LWU)}$ to $\overline{FLT}$ ↓, $C_{(TMR)}$ = Open		10.5	15	µs
F_{ISCP}	ISCP Pulse current frequency			1.18		kHz
$t_{(\overline{FLT}_BSTUVLO)}$	$\overline{FLT}$ assertion delay during Gate Drive UVLO	$V_{(BST–SRC)}$ ↓ $V_{(BST_UVLOF)}$ to $\overline{FLT}$ ↓		28		µs
$t_{(\overline{FLT}_BSTUVLO)}$	$\overline{FLT}$ de-assertion delay during Gate Drive UVLO	$V_{(BST–SRC)}$ ↑ $V_{(BST_UVLOR)}$ to $\overline{FLT}$ ↑		17		µs

Copyright © 2025 Texas Instruments Incorporated

5.7 Typical Characteristics

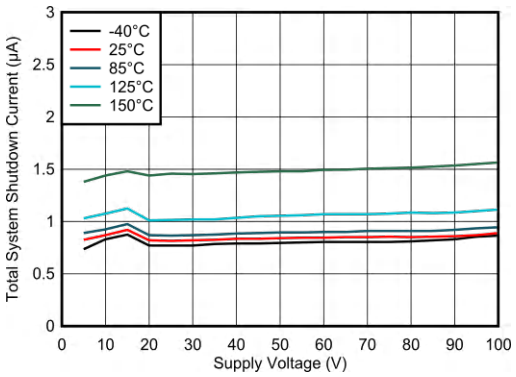

図 5-1. Shutdown Supply Current vs Supply Voltage

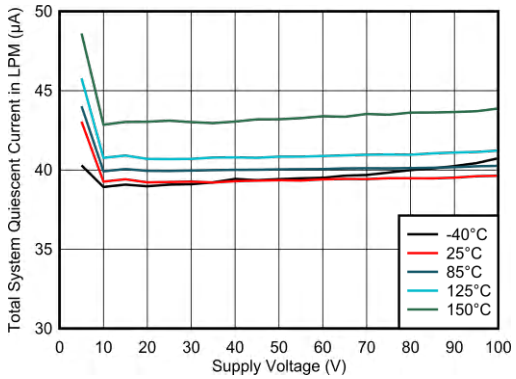

図 5-2. Operating Quiescent Current in LPM vs Supply Voltage

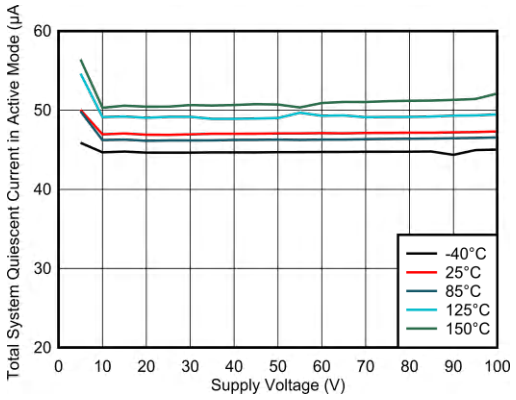

図 5-3. Operating Quiescent Current in Active Mode vs Supply Voltage

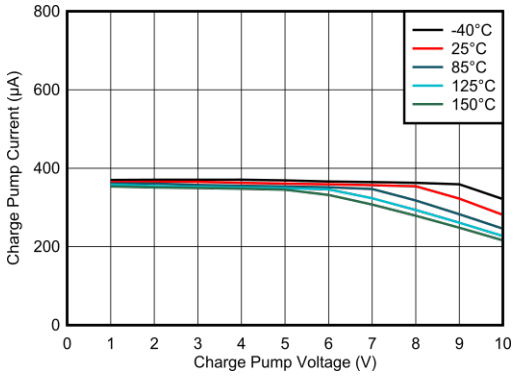

図 5-4. Charge Pump Current vs Charge Pump Voltage

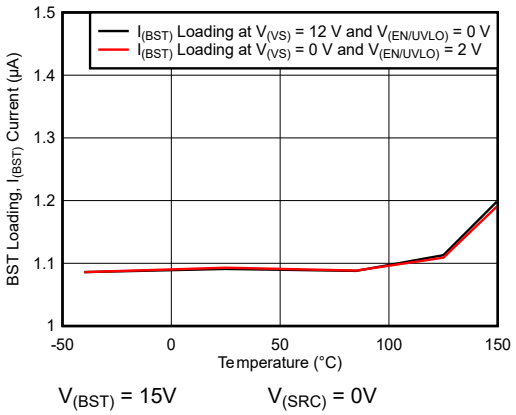

図 5-5. BST Loading Current ($I_{(BST)}$) vs Temperature

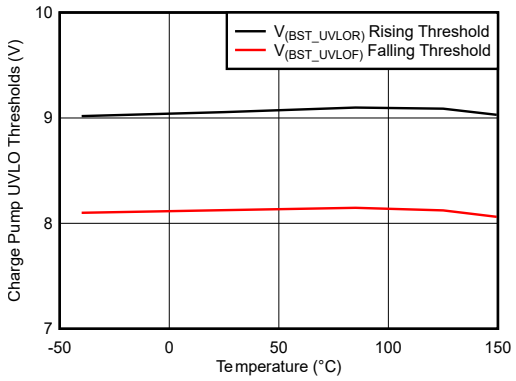

図 5-6. Charge Pump UVLO Thresholds vs Temperature

5.7 Typical Characteristics (continued)

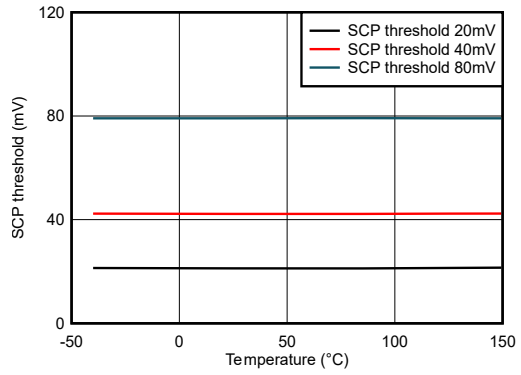

図 5-7. Short-Circuit Threshold ($V_{(SCP/LWU)}$) vs Temperature

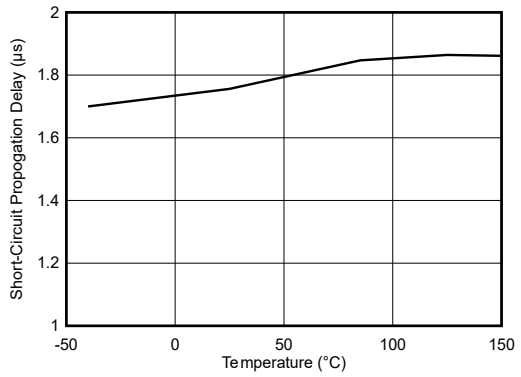

図 5-8. Short-Circuit Protection Response Time (t_{SC}) vs Temperature

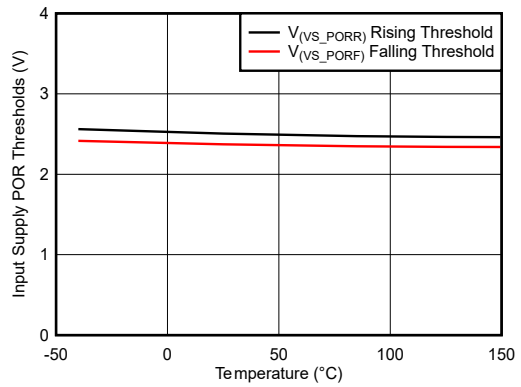

図 5-9. Input Supply POR Thresholds vs Temperature

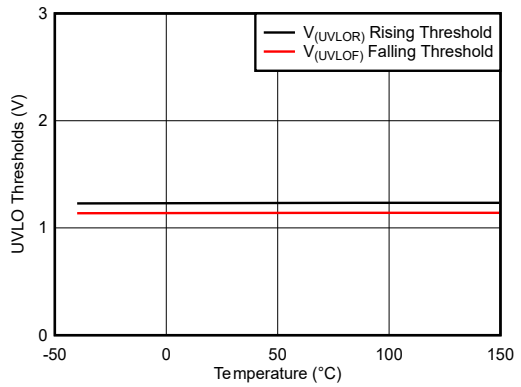

図 5-10. Input Supply UVLO Thresholds vs Temperature

Copyright © 2025 Texas Instruments Incorporated

6 Parameter Measurement Information

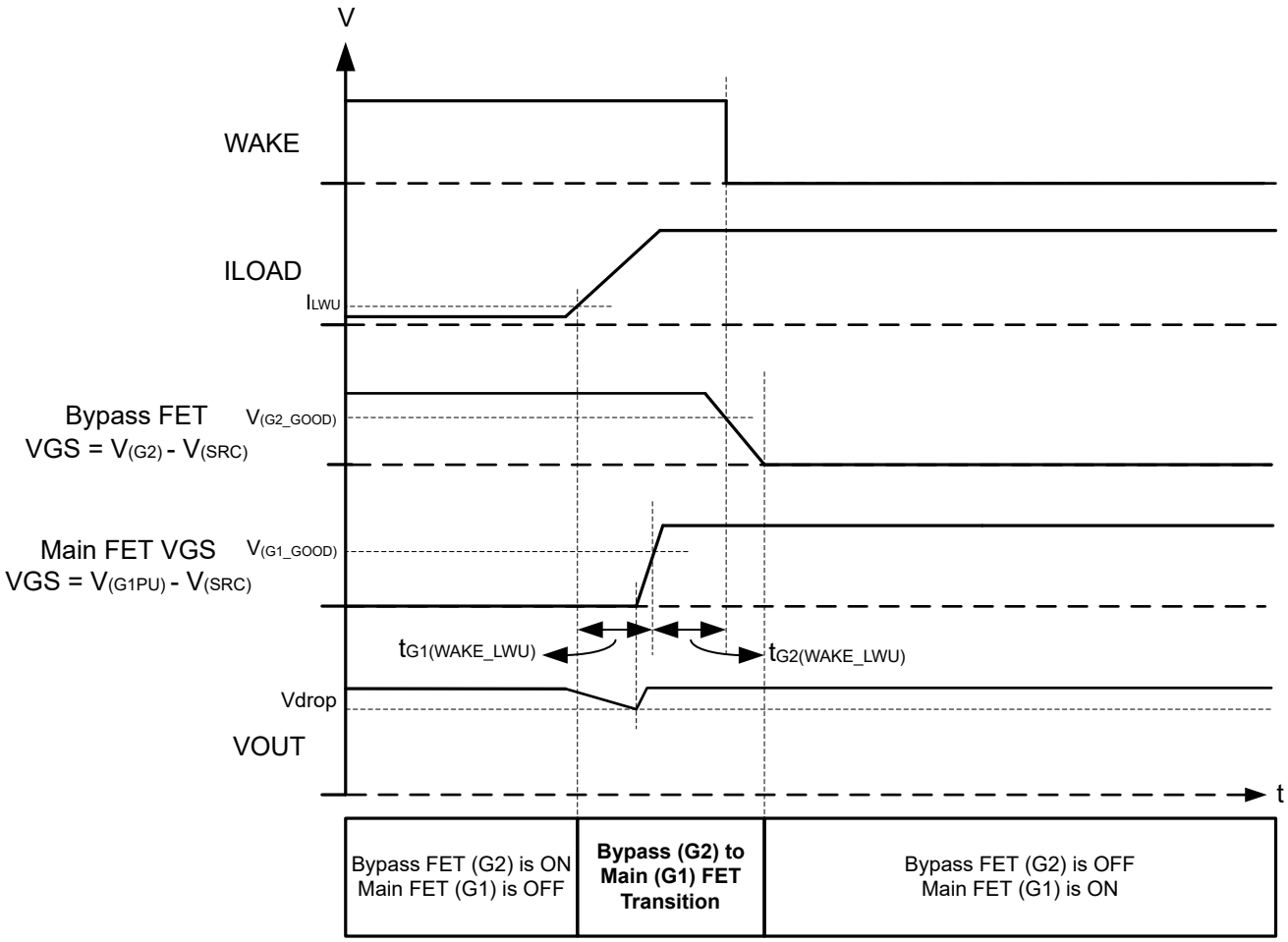

図 6-1. System Wake to Active Mode From Low Power Mode by Load Wakeup

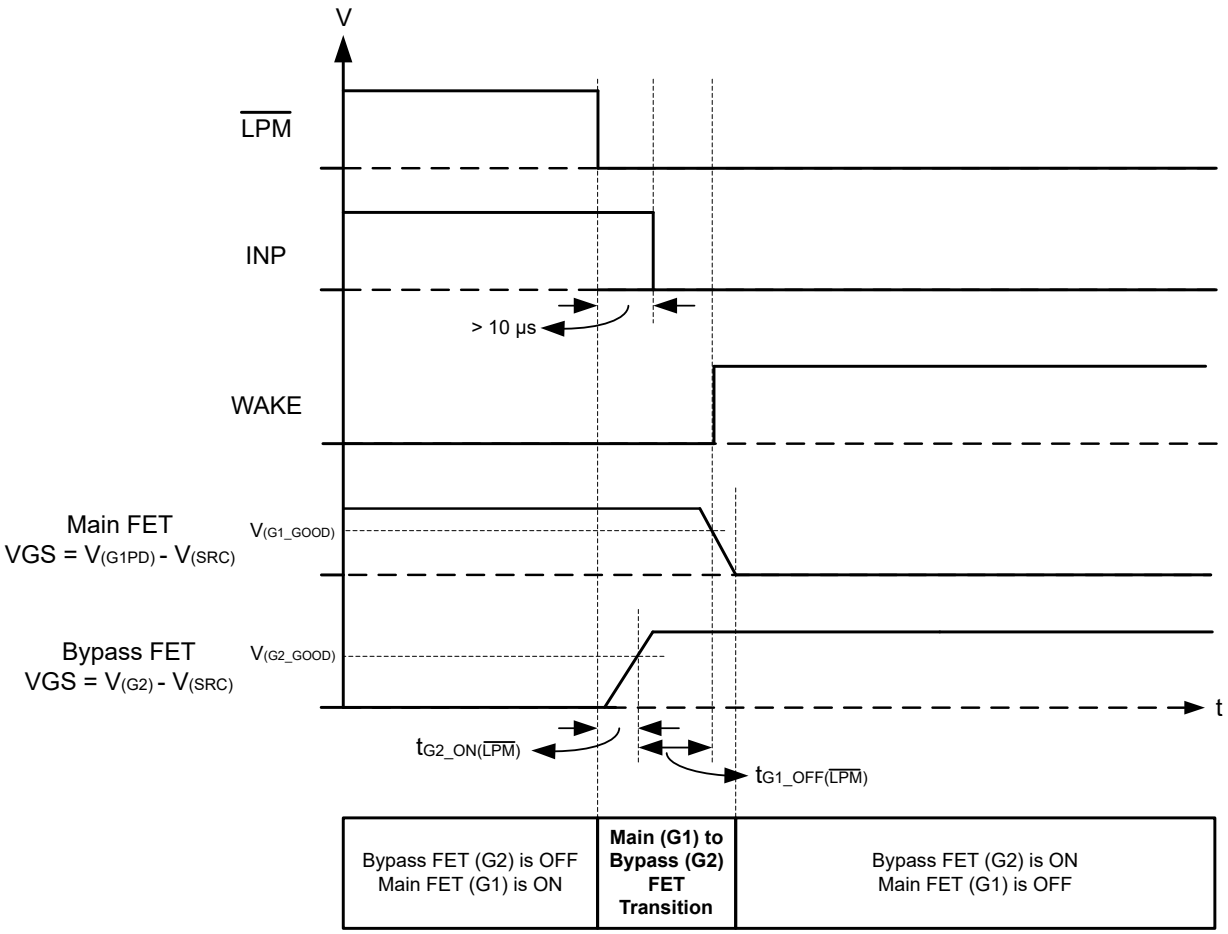

図 6-2. Active Mode to Low Power Mode by LPM Trigger

Copyright © 2025 Texas Instruments Incorporated

7 Detailed Description

7.1 Overview

The TPS48130-Q1 is a 100V low I_Q smart high side driver with protection and diagnostics. With wide operating voltage range of 3.5V–95V, the device is designed for 12V, 24V, and 48V system designs. The device can withstand and protect the loads from negative supply voltages down to –65V.

TPS48130-Q1 has integrated two gate drives with 1.69A source and 2A sink capacity to drive MOSFETs in the main path and 165µA source and 2A sink capacity for the low power path.

In the low power mode with $\overline{LPM}$ = Low, the low power path FET is kept ON and the main FETs are turned OFF. The device consumes low I_Q of 35µA (typical) in this mode. Auto load wakeup threshold to enter into active state can be adjusted using ISCP/LWU pin. I_Q reduces to 1µA (typical) with EN/UVLO low.

The device features WAKE output pin to indicate the mode of operation (active/low power mode).

The device provides adjustable short circuit protection using MOSFET VDS sensing or by using an external R_{SNS} resistor. Auto-retry and latch-off fault behavior can be configured. The device also features diagnosis of the internal short circuit comparator using external control on SCP_TEST input.

The device indicates fault ($\overline{FLT}$) on open drain output during short circuit, charge pump under voltage and input under voltage conditions.

The TPS48130-Q1 is available in a 19-pin VSSOP package.

7.2 Functional Block Diagram

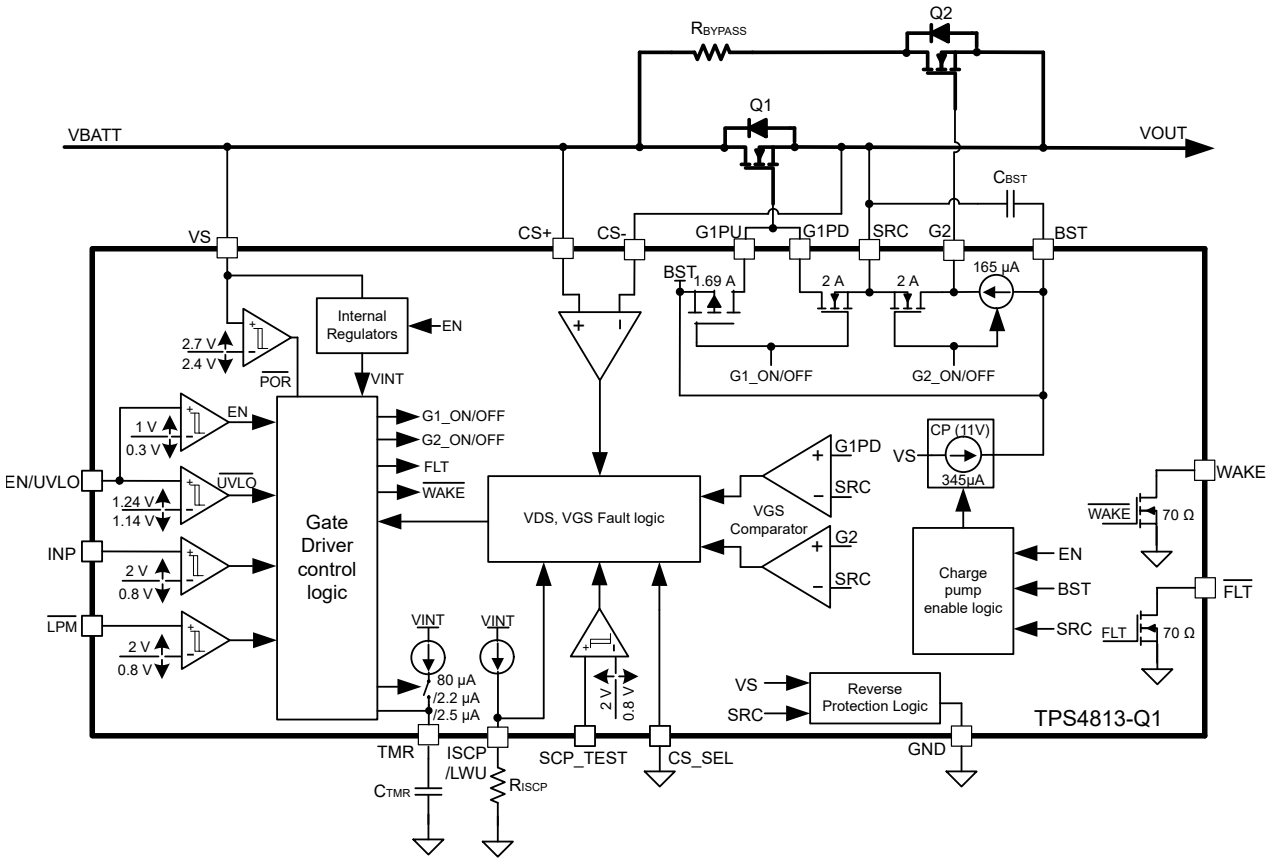

7.3 Feature Description

7.3.1 Charge Pump and Gate Driver Output (VS, G1PU, G1PD, BST, SRC)

図 7-1 shows a simplified diagram of the charge pump and gate driver circuit implementation. The device houses a strong 1.69A/2A peak source/sink gate driver (G1) for main FET and 165µA/2A peak source/sink current gate driver (G2) for bypass FET. The strong gate drivers enable paralleling of FETs in high power system designs ensuring minimum transition time in saturation region. A 11V, 345µA charge pump is derived from VS terminal and charges the external boot-strap capacitor, C_{BST} that is placed across the gate driver (BST and SRC).

VS is the supply pin to the controller. With VS applied and EN/UVLO pulled high, the charge pump turns ON and charges the C_{BST} capacitor. After the voltage across C_{BST} crosses $V_{(BST_UVLOR)}$, the GATE driver section is activated. The device has a 1V (typical) UVLO hysteresis to ensure chattering less performance during initial GATE turn ON. Choose C_{BST} based on the external FET Q_G and allowed dip during FET turn-ON. The charge pump remains enabled until the BST to SRC voltage reaches 11.8V, typically, at which point the charge pump is disabled decreasing the current draw on the VS pin. The charge pump remains disabled until the BST to SRC voltage discharges to 10V typically at which point the charge pump is enabled. The voltage between BST and SRC continue to charge and discharge between 11.8V and 10V as shown in the 図 7-2.

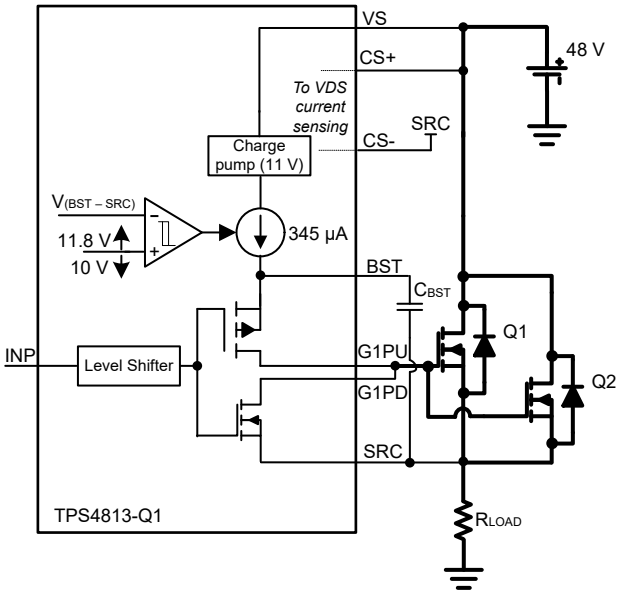

図 7-1. Main FET Gate Driver

Copyright © 2025 Texas Instruments Incorporated

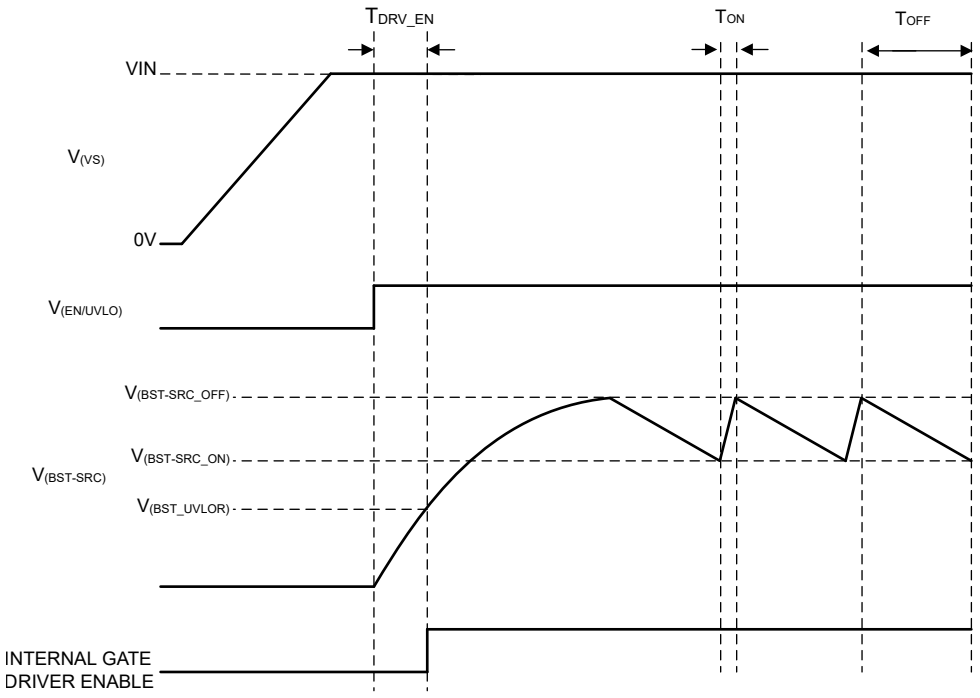

図 7-2. Charge Pump Operation

Use the following equation to calculate the initial gate driver enable delay:

$$T_{DRV_EN} = \frac{C_{BST} \times V_{(BST_UVLOR)}}{345\ \mu A} \quad (1)$$

Where,

C_{BST} is the charge pump capacitance connected across BST and SRC pins.

$V_{(BST_UVLOR)}$ = 9.5V (max).

7.3.2 Capacitive Load Driving

Certain end equipments like automotive power distribution unit power different loads including other ECUs. These ECUs can have large input capacitances. If power to the ECUs is switched on in uncontrolled way, large inrush currents can occur and potentially damaging the power FETs.

To limit the inrush current during capacitive load switching, the following system design techniques can be used with TPS48130-Q1 device.

7.3.2.1 Using Low-Power Bypass FET (G2 Drive) for Load Capacitor Charging

In high-current applications where several FETs (Q1, Q2) are connected in parallel, the gate slew rate control for bypass FET (Q3) can be used to precharge the capacitive load with inrush current limiting.

The TPS48130-Q1 integrates gate driver (G2) with a dedicated control input ($\overline{LPM}$). This feature can be used to drive a separate low power bypass FET (Q3) and precharge the capacitive load with inrush current limiting. 図 7-3 shows the low power bypass FET implementation for capacitive load charging using TPS48130-Q1. An external capacitor C_g reduces the gate turn-ON slew rate and controls the inrush current.

Copyright © 2025 Texas Instruments Incorporated

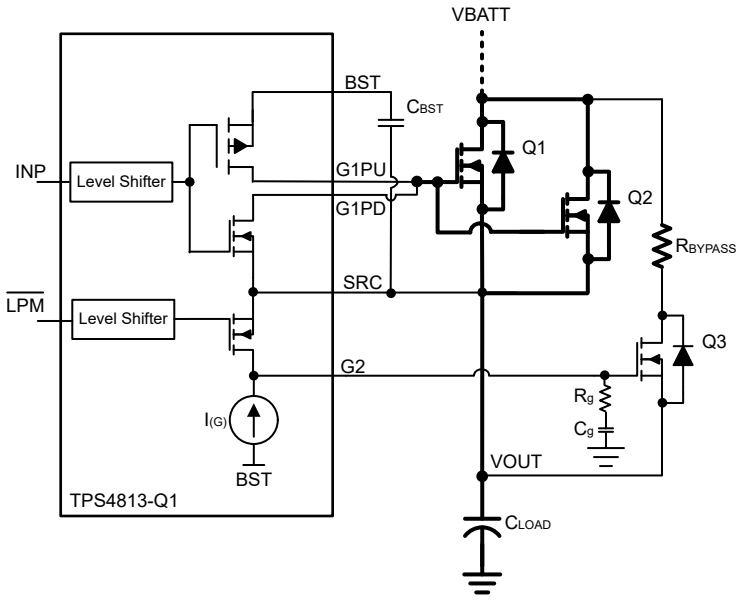

図 7-3. Capacitor Charging Using Gate Slew Rate Control of Low-Power Bypass FET

During power up with EN/UVLO pulled high and $\overline{LPM}$ pulled low >500µs time, the device turns ON Q3 by pulling G2 high with 165µA of source current and the main FETs (G1 gate drive) are kept OFF.

Use 式 2 to calculate the I_{INRUSH}:

$$I_{INRUSH} = C_{LOAD} \times \frac{V_{BATT}}{T_{charge}} \quad (2)$$

Where,

C_{LOAD} is the load capacitance.

VBATT is the input voltage and T_{charge} is the charge time.

Use 式 3 to calculate the required C_g value.

$$C_g = \frac{C_{LOAD} \times I_{(G)}}{I_{INRUSH}} \quad (3)$$

Where,

$I_{(G)}$ is 165µA (typical),

A series resistor R_g must be used in conjunction with C_g to limit the discharge current from C_g during turn-off. The recommended value for Rg is between 220Ω to 470Ω.

After the output capacitor is charged, main FETs can be controlled (G1 gate drive) and bypass FET (G2 gate drive) can be turned OFF by driving $\overline{LPM}$ high externally. The main FETs (G1 gate drive) can now be turned ON by driving INP high.

図 7-4 shows application circuit to charge large output capacitors using low power bypass path in high current applications. This design involves a power resistor (R_{BYPASS}) in series with bypass FET as shown in 図 7-4.

Copyright © 2025 Texas Instruments Incorporated

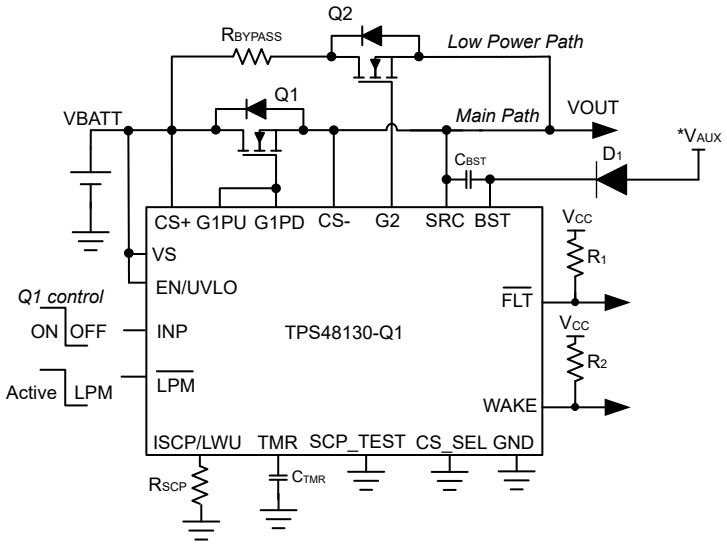

図 7-4. TPS48130-Q1 Application Circuit for Capacitive Load Driving Using Low Power Bypass FET and Series Power Resistor (RBYPASS)

Using Bypass Path for Load Capacitor Charging and Automatic Load Wakeup

TPS48130-Q1 supports load capacitor charging and automatic load wakeup functionality using a common bypass path. Use a resistor R_{BYPASS} and a FET Q3 as shown in 図 7-4.

During the load capacitor charging, the device senses VGS of the bypass FET Q3 by monitoring the voltage across G2 and SRC. Once the sensed threshold has reached V_{G2_GOOD} threshold (7V typical) indicating the Q3 gate is enhanced (and load capacitor is charged) then the voltage across CS+ and CS– pins is monitored.

With this scheme, capacitor charging current (I_{INRUSH}) can also be set at higher than load wakeup threshold (I_{LWU}) as shown in 図 7-5.

Copyright © 2025 Texas Instruments Incorporated

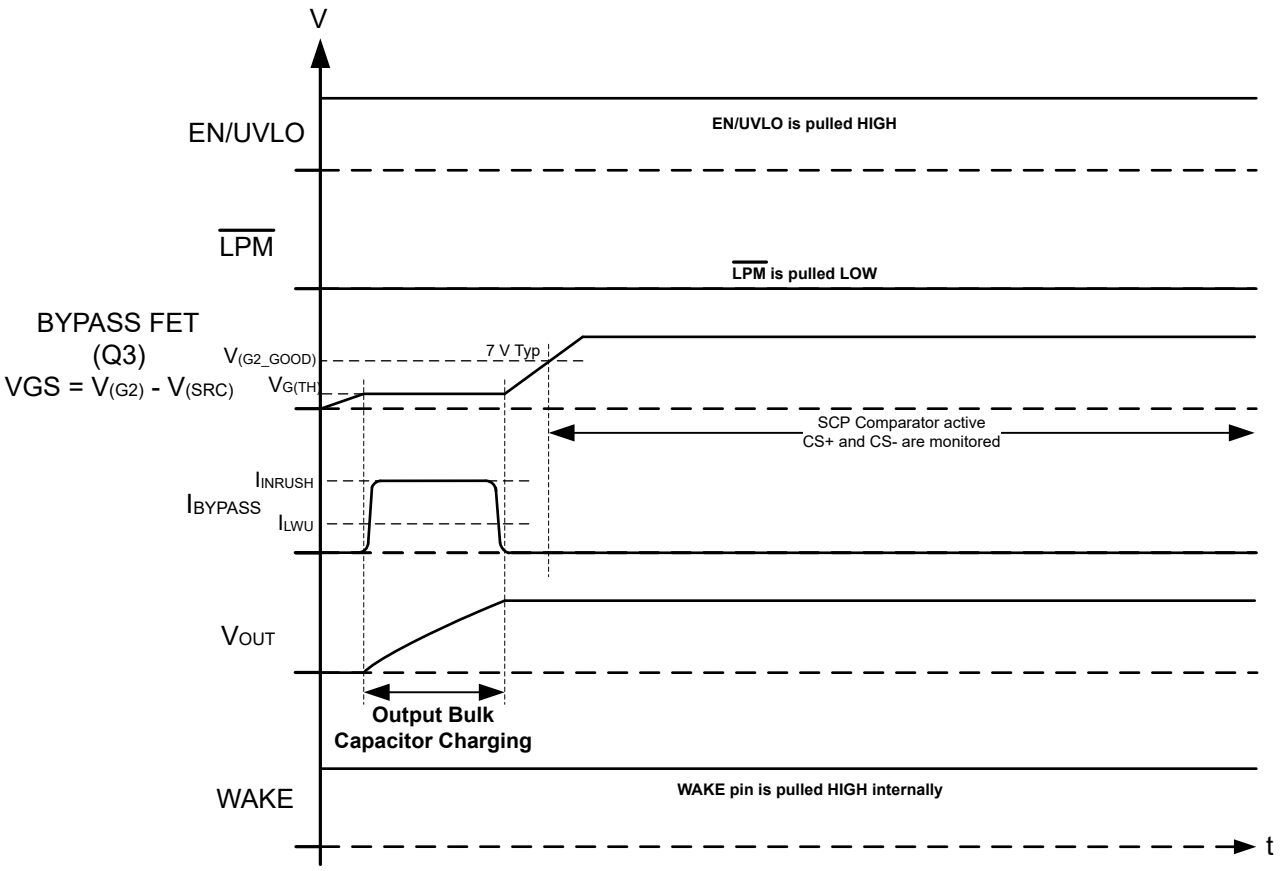

図 7-5. Timing Diagram for Output Bulk Capacitor Charging Using Bypass Path

Setting the load wakeup trigger threshold: During normal operation, the series power resistor R_{BYPASS} along with bypass FET R_{DSON} is used to set load wakeup current threshold. R_{BYPASS} can be selected using the following equation:

$$R_{BYPASS}\left(\Omega\right) = \frac{\left(2\ \mu A \times R_{ISCP} + 19\ mV\right)}{I_{LWU}} - R_{DSON_BYPASS} \quad (4)$$

Where,

R_{ISCP} is the resistor selected based on set short-circuit threshold using 式 8.

I_{LWU} is the desired load current wakeup threshold.

R_{DSON_BYPASS} is the R_{DSON} of bypass FET.

R_{BYPASS} also helps to limit the current as well as stress on Q3 during power up into short-circuit.

7.3.2.2 Using Main FET's (G1 Drive) Gate Slew Rate Control

In the applications where low power bypass path is not used, the cap charging can be done using main FET gate drive control.

For limiting inrush current during turn-ON of the main FET with capacitive loads, use R_1, R_2, C_1 as shown in 図 7-6. The R_1 and C_1 components slow down the voltage ramp rate at the gate of main FET. The FET source follows the gate voltage resulting in a controlled voltage ramp across the output capacitors.

Copyright © 2025 Texas Instruments Incorporated

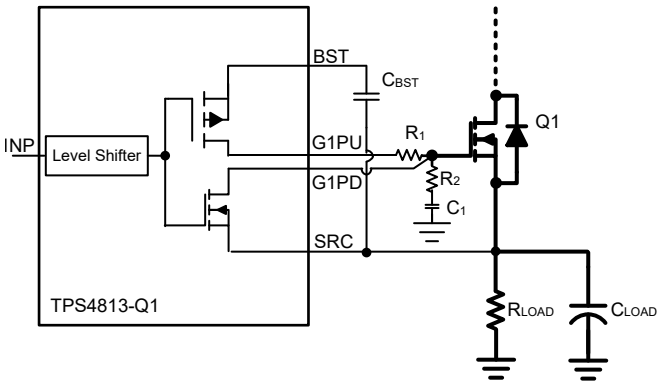

図 7-6. Inrush Current Limiting

Use the 式 5 to calculate the inrush current during turn-ON of the FET.

$$I_{INRUSH} = C_{LOAD} \times \frac{V_{BATT}}{T_{charge}} \quad (5)$$

$$C_1 = \frac{0.63 \times V_{(BST\ -\ SRC)} \times C_{LOAD}}{R_1 \times I_{INRUSH}} \quad (6)$$

Where,

C_{LOAD} is the load capacitance.

VBATT is the input voltage and T_{charge} is the charge time.

$V_{(BST-SRC)}$ is the charge pump voltage (11V),

Use a damping resistor R_2 (~ 10Ω) in series with C_1. 式 6 can be used to compute required C_1 value for a target inrush current. A 100kΩ resistor for R_1 can be a good starting point for calculations.

Connecting G1PD pin of TPS48130-Q1 directly to the gate of the external FET ensures fast turn-OFF without any impact of R_1 and C_1 components.

C_1 results in an additional loading on C_{BST} to charge during turn-ON. Use below equation to calculate the required C_{BST} value:

$$C_{BST} = \frac{Q_{g(total)}}{\Delta V_{BST}} + 10 \times C_1 \quad (7)$$

Where,

$Q_{g(total)}$ is the total gate charge of the FET,

ΔV_{BST} (1V typical) is the ripple voltage across BST to SRC pins.

7.3.3 Short-Circuit Protection

The TPS48130-Q1 feature adjustable short circuit protection. The threshold and response time can be adjusted using R_{ISCP} resistor and C_{TMR} capacitor respectively. The device senses the voltage across CS+ and CS– pins. These pins can be connected across the FET drain and source terminals for FET R_{DSON} sensing or across an external current sense resistor (R_{SNS}) as shown in 図 7-7 and 図 7-8 respectively.

Copyright © 2025 Texas Instruments Incorporated

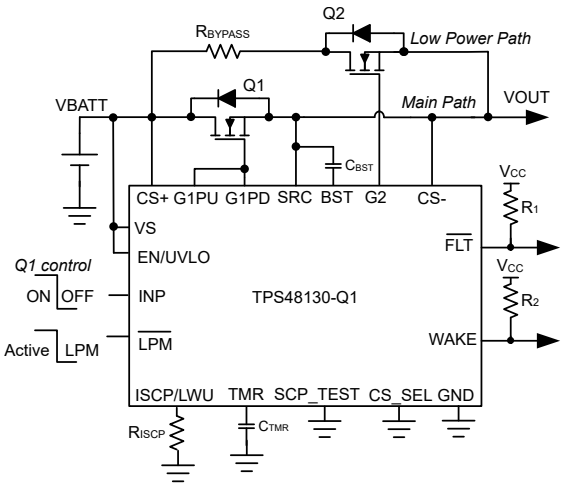

図 7-7. TPS48130-Q1 Application Circuit With Main FET RDSON Based Current Sensing

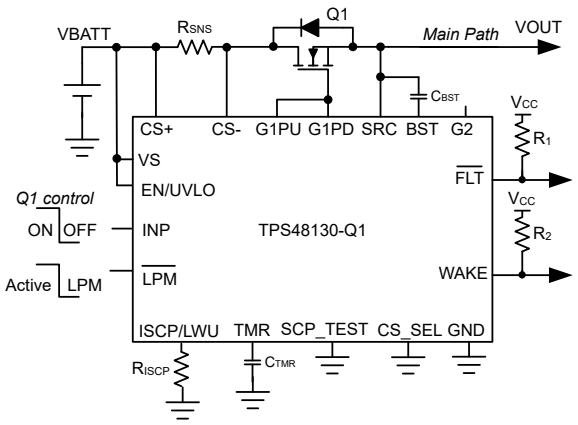

図 7-8. TPS48130-Q1 Application Circuit With External Sense Resistor R_{SNS} Based Current Sensing

Set the hard short-circuit detection threshold using an external R_{ISCP} resistor across ISCP/LWU and GND pins. Use 式 8 to calculate the required R_{ISCP} value:

$$R_{ISCP}\left(\Omega\right) = \frac{\left(I_{SC} \times R_{SNS} - 19\ mV\right)}{2\ \mu A} \tag{8}$$

Where,

R_{SNS} is the current sense resistor value or the FET R_{DSON} value.

I_{SC} is the desired short circuit current level.

The hard short circuit protection response is fastest with no C_{TMR} cap connected across TMR and GND pins.

With device powered ON and EN/UVLO, INP pulled high, during Q1 turn ON, first VGS of main FET is sensed by monitoring the voltage across G1PD to SRC. Once G1PD to SRC voltage raises above $V_{(G1_GOOD)}$ threshold which ensures that the external FET is enhanced, then the SCP comparator output is monitored. If the sensed voltage across CS+ and CS– exceeds the short-circuit set point ($V_{SCP/LWU}$), G1PD pulls low to SRC and $\overline{FLT}$ asserts low within 10µs (with TMR pin open). Subsequent events can be set either to be auto-retry or latch off as described in following sections.

7.3.3.1 Short-Circuit Protection With Auto-Retry

The C_{TMR} programs the short-circuit protection delay (t_{SC}) and auto-retry time (t_{RETRY}). Once the voltage across CS+ and CS– exceeds the set point, the C_{TMR} starts charging with 80µA pull-up current.

After C_{TMR} charges to $V_{(TMR_SC)}$, G1PD pulls low to SRC and $\overline{FLT}$ asserts low providing warning on impending FET turn OFF. Post this event, the auto-retry behavior starts. The C_{TMR} capacitor starts discharging with 2.5µA pulldown current. After the voltage reaches $V_{(TMR_LOW)}$ level, the capacitor starts charging with 2.2µA pullup. After 32 charging-discharging cycles of C_{TMR} the FET turns ON back and $\overline{FLT}$ de-asserts.

The device retry time (t_{RETRY}) is based on C_{TMR} for the first time as per 式 10 and this retry time (t_{RETRY}) is < 10µs for subsequent auto-retry events.

Use 式 9 to calculate the C_{TMR} capacitor to be connected across TMR and GND.

$$C_{TMR} = \frac{I_{TMR} \times t_{SC}}{1.1} \tag{9}$$

Copyright © 2025 Texas Instruments Incorporated

Where,

I_{TMR} is internal pull-up current of 80µA.

t_{SC} is desired short-circuit response time.

The fastest t_{SC} is <10µs with no C_{TMR} cap connected.

$$t_{RETRY} = 22.7 \times 10^6 \times C_{TMR} \quad (10)$$

If the short-circuit pulse duration is below t_{SC} then the FET remains ON and C_{TMR} gets discharged using internal pull down switch.

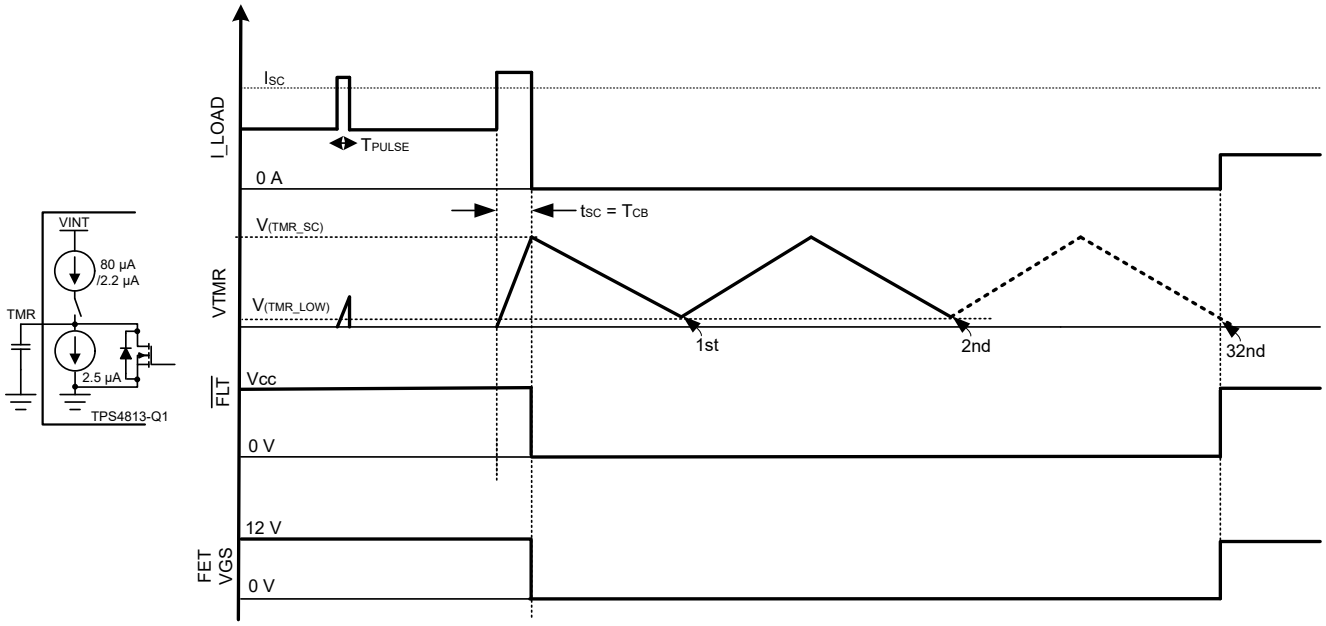

図 7-9. Short-Circuit Protection With Auto-Retry

7.3.3.2 Short-Circuit Protection With Latch-Off

Connect an approximately 100kΩ resistor across C_{TMR} as shown in 図 7-10. With this resistor, during the charging cycle, the voltage across C_{TMR} gets clamped to a level below $V_{(TMR_SC)}$ resulting in a latch-off behavior and $\overline{FLT}$ asserts low at same time.

Use 式 11 to calculate C_{TMR} capacitor to be connected between TMR and GND for R_{TMR} = 100kΩ.

$$C_{TMR} = \frac{t_{SC}}{R_{TMR} \times \ln\left(\frac{1}{1 - \frac{1.1}{R_{TMR} \times 80\ \mu A}}\right)} \quad (11)$$

Where,

I_{TMR} is internal pull-up current of 80µA.

t_{SC} is desired short-circuit response time.

Pull down INP or $\overline{LPM}$ low or EN/UVLO (below $V_{(ENF)}$) or power cycle VS below $V_{(VS_PORF)}$ to reset the latch. At low edge, the timer counter is reset and C_{TMR} is discharged. G1PU pulls up to BST when INP is pulled high.

Copyright © 2025 Texas Instruments Incorporated

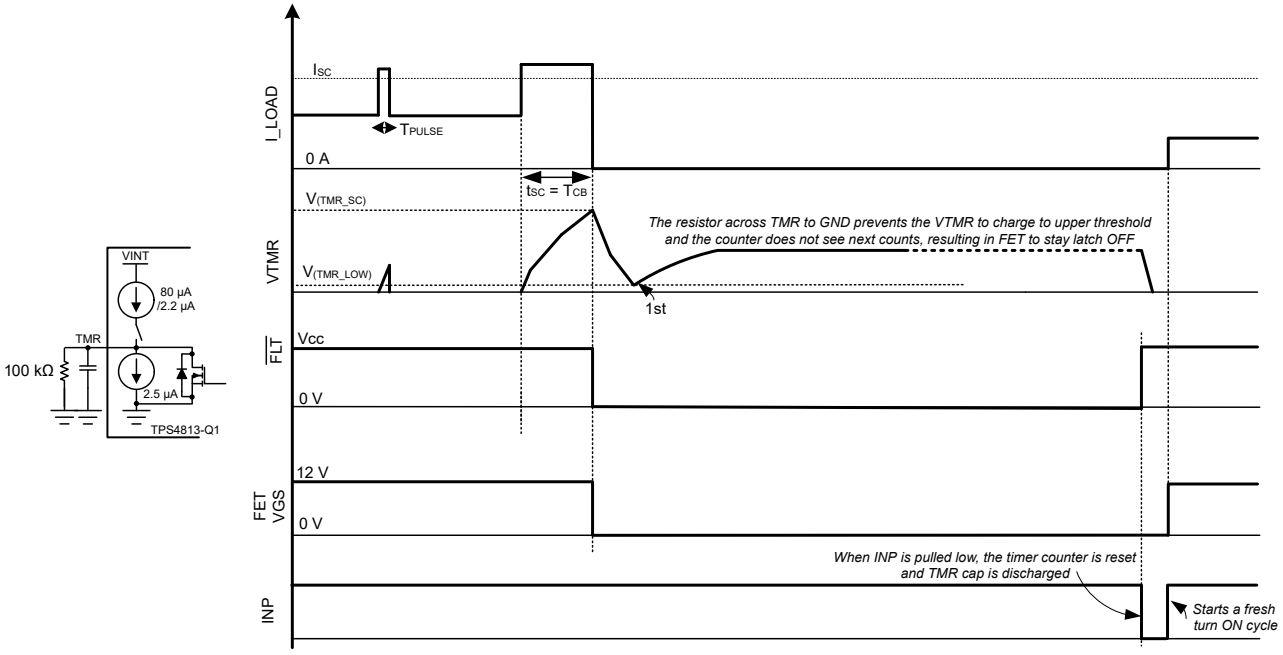

図 7-10. Short-Circuit Protection With Latch-Off

7.3.4 Undervoltage Protection (UVLO)

TPS48130-Q1 has an accurate undervoltage protection (< ±2%) using EN/UVLO pin providing robust protection. Connect a resistor ladder as shown in 図 7-11 for undervoltage protection threshold programming.

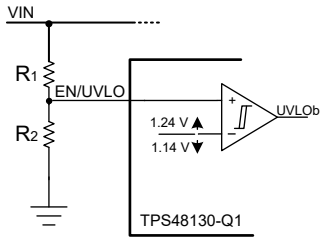

図 7-11. Programming Undervoltage Protection Threshold

7.3.5 Reverse Polarity Protection

The TPS48130-Q1 devices features integrated reverse polarity protection to protect the device from failing during input and output reverse polarity faults. Reverse polarity faults occur during installation and maintenance of the end equipment. The device is tolerant to reverse polarity voltages down to –65V both on input and on the output.

On the output side, the device can see transient negative voltages during regular operation due to output cable harness inductance kickbacks when the switches are turned OFF. In such systems the output negative voltage level is limited by the output side TVS or a diode.

7.3.6 Short-Circuit Protection Diagnosis (SCP_TEST)

In the safety critical designs, short-circuit protection (SCP) feature and its diagnosis is important.

The TPS48130-Q1 features the diagnosis of the internal short circuit protection. When SCP_TEST is driven low to high then, a voltage is applied internally across the SCP comparator inputs to simulate a short circuit event.

Copyright © 2025 Texas Instruments Incorporated

The comparator output controls the gate drive (G1PU/G1PD) and also the $\overline{FLT}$. If the gate drive goes low (with initially being high) and $\overline{FLT}$ also goes low then it indicates that the SCP is good otherwise it is to be treated as SCP feature is not functional.

If the SCP_TEST feature is not used, then connect SCP_TEST pin to GND.

7.4 Device Functional Modes

7.4.1 State Diagram

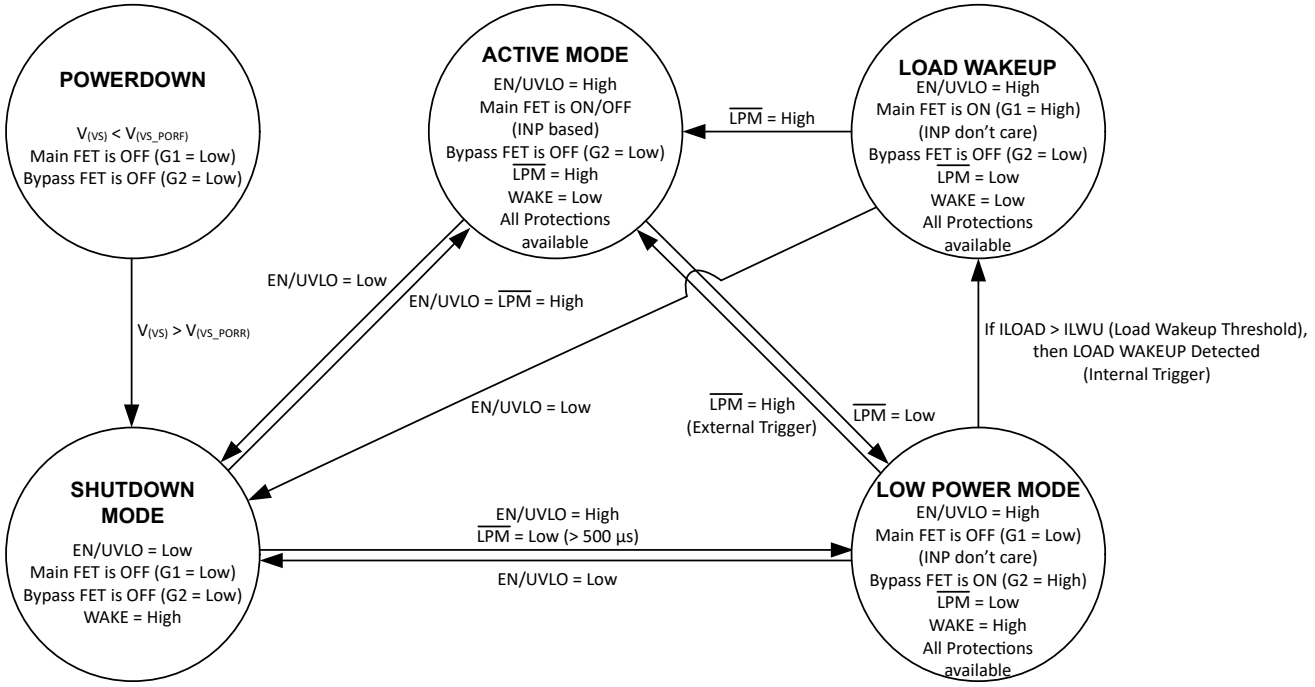

図 7-12. TPS48130-Q1 State Diagram

7.4.2 State Transition Timing Diagram

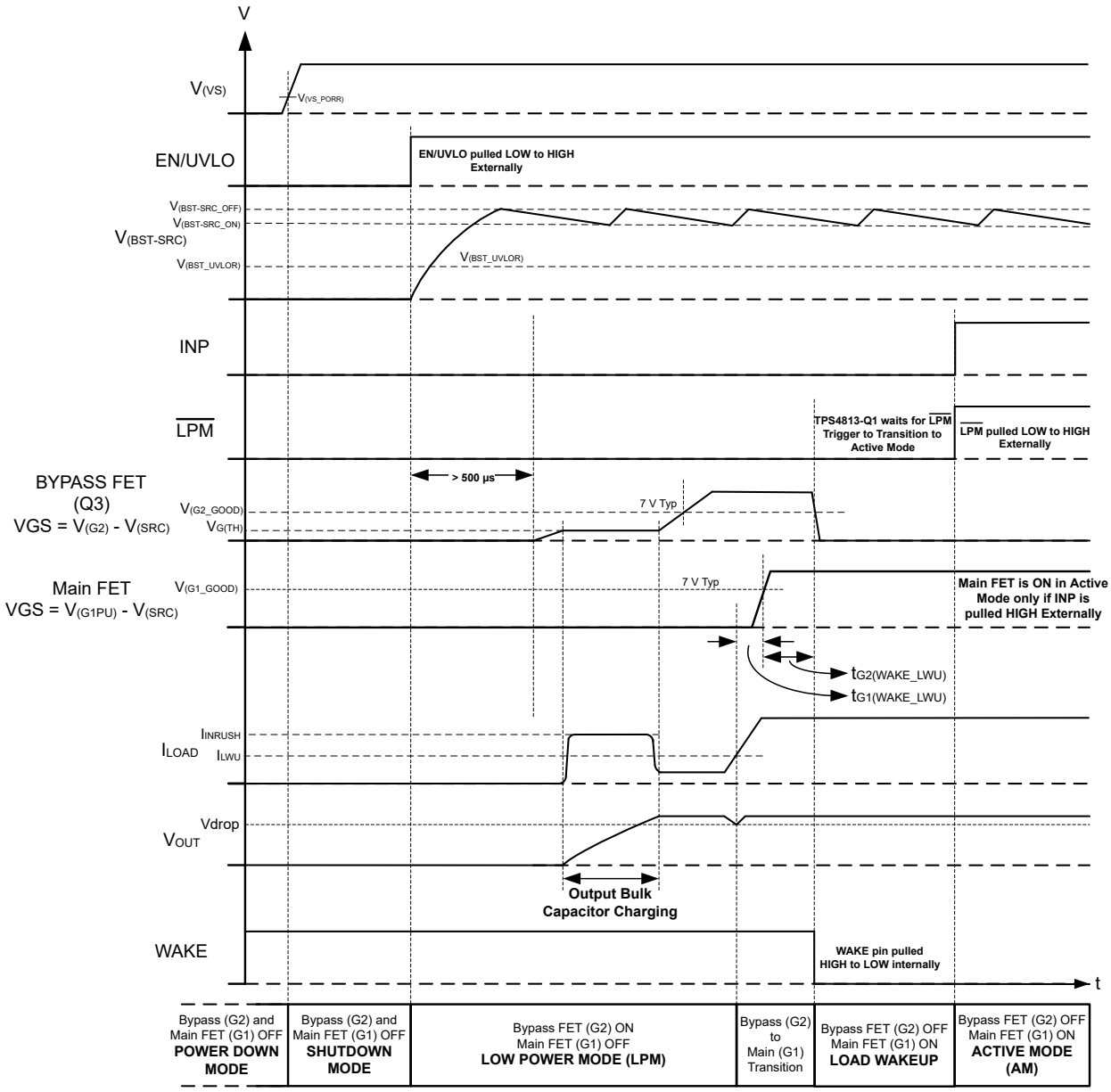

図 7-13. State Transition Timing Diagram With Load Wakeup Event

Copyright © 2025 Texas Instruments Incorporated

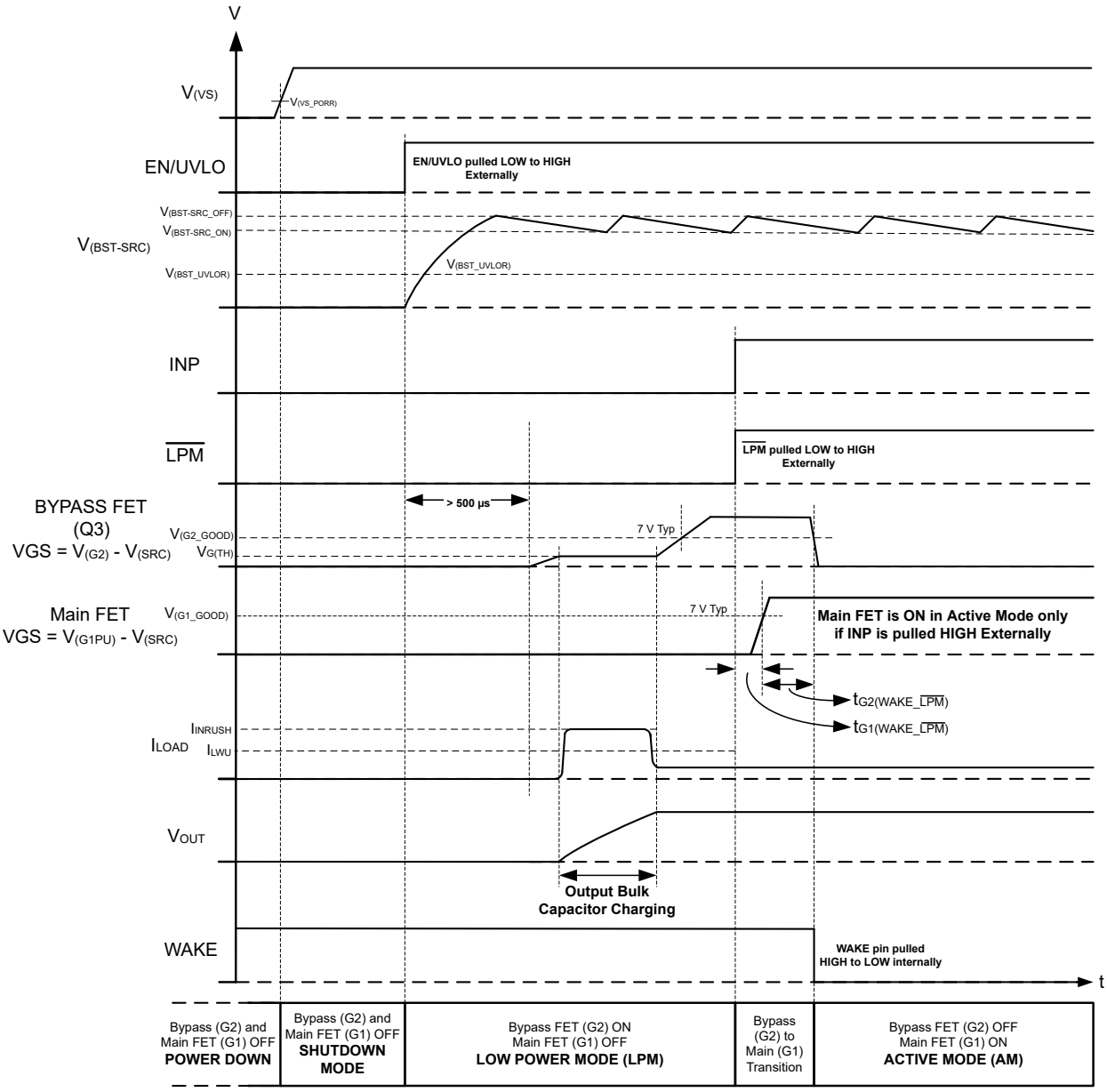

図 7-14. State Transition Timing Diagram With $\overline{\text{LPM}}$ Trigger

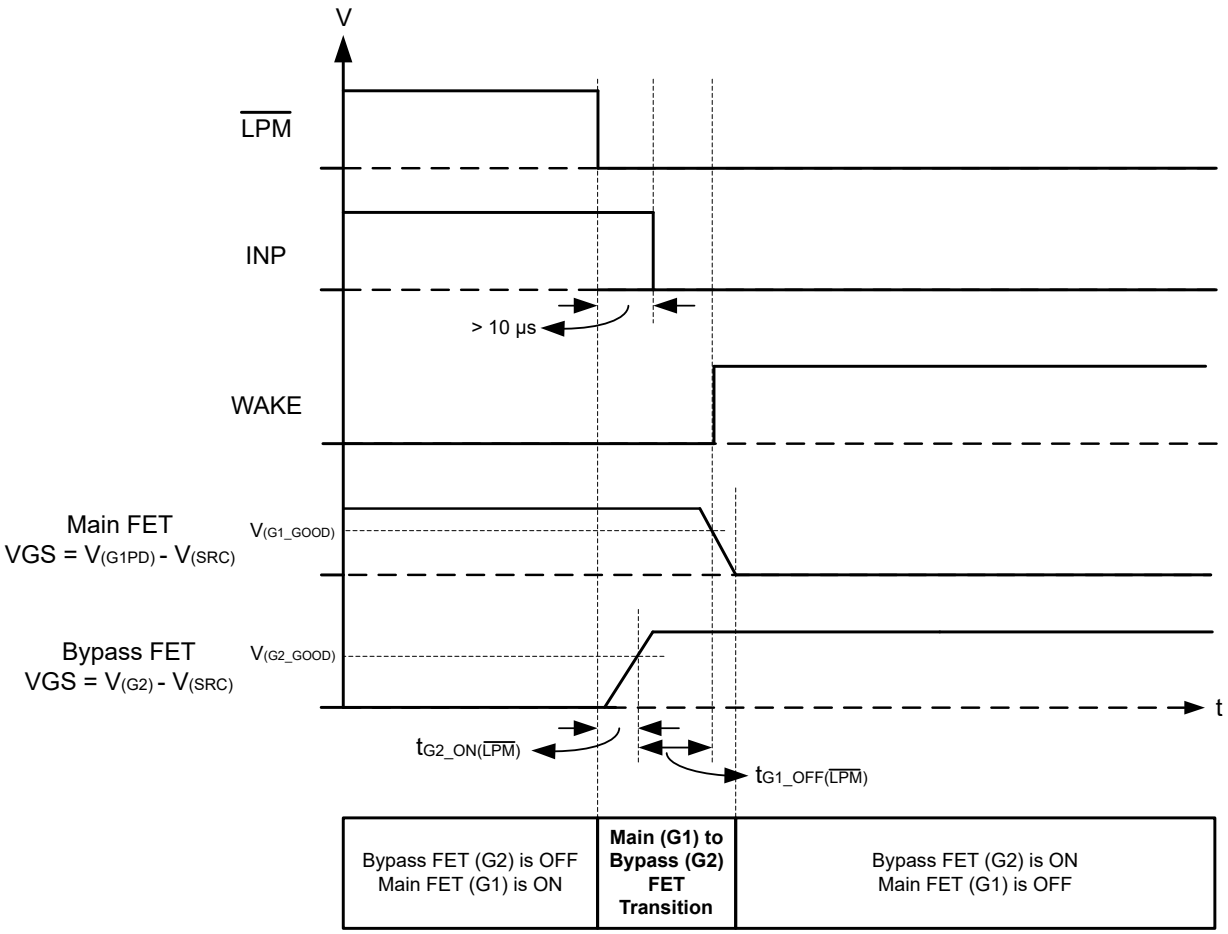

図 7-15. LPM and INP Signal Sequencing Consideration to Enter Into Low Power Mode From Active Mode

7.4.3 Power Down

If applied VS voltage is below $V_{(VS_PORF)}$ then the device is in disabled state. In this mode, the charge pump and all the protection features are disabled. Both the gate drive outputs (G1PD and G2) are low.

7.4.4 Shutdown Mode

With VS > $V_{(VS_PORR)}$ and EN/UVLO pulled < $V_{(ENF)}$, the device transitions to low I_Q shutdown mode. In this mode, the charge pump and all the protection features are disabled. Both the gate drive outputs (G1PD and G2) are low. The device consumes low I_Q of 1µA (typical) in this mode.

- **Shutdown to Low Power Mode:**

  To transition from shutdown to low power mode, drive EN/UVLO high (> $V_{(ENR)}$) and simultaneously drive $\overline{LPM}$ low for >500µs.
- **Shutdown to Active Mode:**

  To transition from shutdown to active mode directly, drive EN/UVLO and $\overline{LPM}$ together high at same time.

7.4.5 Low Power Mode

The device transitions from shutdown to low power mode when EN/UVLO is driven high (>$V_{(ENR)}$) and $\overline{LPM}$ is driven low for >500µs simultaneously.

Copyright © 2025 Texas Instruments Incorporated

The device can also transition from active mode to low power mode when $\overline{LPM}$ is pulled low. When entering from active mode to low power mode, $\overline{LPM}$ and INP signal sequencing consideration can be followed as per 図 7-15. Pulling INP low before $\overline{LPM}$ results in main FET (G1 gate drive) turning OFF which can cause output voltage droop momentarily before bypass FET (G2 gate drive) turns ON. Pulling INP low after at least 10µs of $\overline{LPM}$ is pulled low makes a seamless transition from active to low power mode without any output voltage dip.

In this mode, charge pump and gate drivers are enabled. The main FET (G1 gate drive) is OFF and bypass FET (G2 gate drive) is turned ON and WAKE pin asserts high in this state. TPS48130-Q1 consumes low I_Q of 35µA (typical) in low power mode.

The device transitions from low power mode to active mode when:

- **External Trigger:** $\overline{LPM}$ is pulled high externally
- **Internal Trigger:** Load current exceeds load wakeup trigger threshold (I_{LWU}) set by 式 4

After load current exceeds load wakeup threshold (I_{LWU}), the device automatically turns OFF the bypass FET (G2 gate drive) and turns ON main FET (G1 gate drive) and WAKE asserts low indicating the exit from the low power mode.

The device waits for external $\overline{LPM}$ signal to go high to transition into Active mode.

Protections available in low power mode are:

- Input UVLO: Bypass FET (G2 gate drive) is turned OFF when voltage on EN/UVLO falls below $V_{(UVLOF)}$ and $\overline{FLT}$ asserts low.
- Charge pump UVLO: Bypass FET (G2 gate drive) is turned OFF when voltage between BST to SRC falls below $V_{(BST_UVLOF)}$ and $\overline{FLT}$ asserts low.
- Short-circuit protection: If output short-circuit event occurs in low power mode then, the device automatically exits low power mode by turning OFF the bypass FET (G2 gate drive) and turning ON main FET (G1 gate drive) via the load wakeup functionality. In load wakeup state, if the voltage across CS+ and CS– exceeds the set short-circuit threshold ($V_{SCP/LWU}$), main FET (G1 gate drive) is turned OFF and $\overline{FLT}$ asserts low. The subsequent operation is based on auto-retry or latch off as per the configuration.

7.4.6 Active Mode

The device transitions from shutdown mode to active mode directly when EN/UVLO and $\overline{LPM}$ are driven high together at same time.

TPS48130-Q1 transitions from low power mode into active mode by:

- **External Trigger:** Drive $\overline{LPM}$ high externally.
- **Internal Trigger:** After load current exceeds load wakeup threshold (I_{LWU}), TPS48130-Q1 automatically turns OFF the bypass FET (G2 gate drive). Drive $\overline{LPM}$ high after load wakeup event to switch to active mode.

In this mode, charge pump, gate drivers and all protections are enabled. The main FET (G1 gate drive) can be tuned ON or OFF by driving INP high or low respectively and bypass FET (G2 gate drive) is turned OFF and WAKE pin asserts low in this state.

The device exits active mode and enters low power mode when $\overline{LPM}$ is pulled low.

Protections available in active state are:

- Input UVLO: Main FET (G1 gate drive) is turned OFF when voltage on EN/UVLO falls below $V_{(UVLOF)}$ and $\overline{FLT}$ asserts low.
- Charge pump UVLO: Main FET (G1 gate drive) is turned OFF when voltage between BST to SRC falls below $V_{(BST_UVLOF)}$ and $\overline{FLT}$ asserts low.
- Short-circuit protection: Main FET (G1 gate drive) is turned OFF when voltage across CS+ and CS– exceeds the set short-circuit threshold ($V_{SCP/LWU}$). The device goes in auto-retry or latch-off based on the selected configuration and $\overline{FLT}$ asserts low.

Copyright © 2025 Texas Instruments Incorporated

8 Application and Implementation

注

以下のアプリケーション情報は、TI の製品仕様に含まれるものではなく、TI ではその正確性または完全性を保証いたしません。個々の目的に対する製品の適合性については、お客様の責任で判断していただくことになります。お客様は自身の設計実装を検証しテストすることで、システムの機能を確認する必要があります。

8.1 Application Information

The TPS48130-Q1 is a 100V low I_Q smart high side driver with protection and diagnostics. With wide operating voltage range of 3.5V–95V and features such as low power mode with automatic load wakeup functionality, short circuit protection the device is suitable for 12V, 24V, and 48V power distribution system designs. The device can also withstand and protect the loads from negative supply voltages down to –65V.

The following design procedure can be used to select the supporting component values based on the application requirement.

8.2 Typical Application 1: Driving Power At All Times (PAAT) Loads With Automatic Load Wakeup

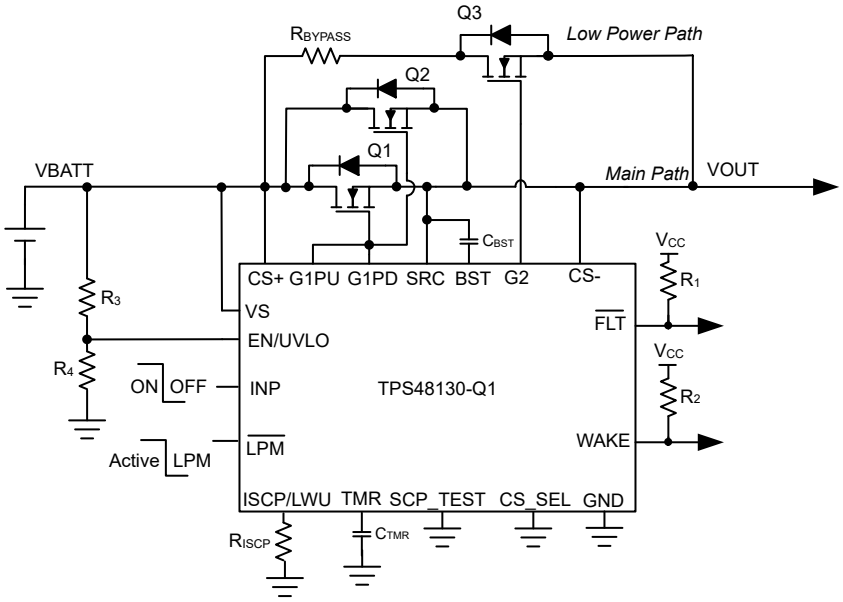

図 8-1. TPS48130-Q1 Application Circuit for Driving Power At All Times (PAAT) Loads With Automatic Load Wakeup

8.2.1 Design Requirements

表 8-1. Design Parameters

PARAMETER	VALUE
Typical input voltage, V_{BATT_MIN} to V_{BATT_MAX}	36V to 60V
Undervoltage lockout set point, V_{INUVLO}	24V
Maximum load current, I_{OUT}	40A
Short-circuit protection threshold, I_{SC}	100A
Fault timer period (t_{SC})	20µs
Fault response	Auto-retry

Copyright © 2025 Texas Instruments Incorporated

表 8-1. Design Parameters (続き)

PARAMETER	VALUE
Load wakeup threshold, I_{LWU}	50mA

8.2.2 Detailed Design Procedure

Selection of MOSFET, Q_1 and Q_2

For selecting the MOSFET Q_1 and Q_2, important electrical parameters are the maximum continuous drain current I_D, the maximum drain-to-source voltage $V_{DS(MAX)}$, the maximum drain-to-source voltage $V_{GS(MAX)}$, and the drain-to-source ON resistance R_{DSON}.

The maximum continuous drain current, I_D, rating must exceed the maximum continuous load current.

The maximum drain-to-source voltage, $V_{DS(MAX)}$, must be high enough to withstand the highest voltage seen in the application. Considering 70V as the maximum application voltage due to load dump, MOSFETs with V_{DS} voltage rating of 80V is chosen for this application.

The maximum V_{GS} TPS48130-Q1 can drive is 11V, so a MOSFET with 15V minimum V_{GS} rating must be selected.

To reduce the MOSFET conduction losses, an appropriate $R_{DS(ON)}$ is preferred.

Based on the design requirements, two of IAUS200N08S5N023 are selected and its ratings are:

- 80V $V_{DS(MAX)}$ and ±20V $V_{GS(MAX)}$
- $R_{DS(ON)}$ is 2.3mΩ typical at 10V V_{GS}
- MOSFET $Q_{g(total)}$ is 110nC max

TI recommends to make sure that the short-circuit conditions such max V_{IN} and I_{SC} are within SOA of selected FETs (Q_1 and Q_2) for > t_{SC} timing.

Selection of Bootstrap Capacitor, C_{BST}

The internal charge pump charges the external bootstrap capacitor (connected between BST and SRC pins) with approximately 345µA. Use the following equation to calculate the minimum required value of the bootstrap capacitor for driving two parallel IAUS200N08S5N023 MOSFETs.

$$C_{BST} = \frac{Q_{g(total)}}{1\ V} = 2 \times 100\ nF = 220\ nF \quad (12)$$

Choose closest available standard value: 220nF, 10%.

Programming the Short-Circuit Protection Threshold – R_{ISCP} Selection

The R_{ISCP} sets the short-circuit protection threshold, whose value can be calculated using following equation:

$$R_{ISCP}\left(\Omega\right) = \frac{\left(I_{SC} \times R_{SNS} - 19\ mV\right)}{2\ \mu A} \quad (13)$$

To set 100A as short-circuit protection threshold, R_{ISCP} value is calculated to be 48kΩ for two FETs in parallel.

Choose the closest available standard value: 48.1kΩ, 1%.

Copyright © 2025 Texas Instruments Incorporated

Programming the Fault Timer Period – C_{TMR} Selection

For the design example under discussion, overcurrent transients are allowed for 20µs duration. This blanking interval, t_{SC} (or circuit breaker interval, T_{CB}) can be set by selecting appropriate capacitor C_{TMR} from TMR pin to ground. The value of C_{TMR} to set 20µs for t_{SC} can be calculated using following equation:

$$C_{TMR} = \frac{80\ \mu A \times t_{SC}}{1.1} \quad (14)$$

Choose closest available standard value: 1.5nF, 10%.

TMR pin can be left floating for fast response of t_{SC} <10µs.

Programming the Load Wakeup Threshold – R_{BYPASS} and Q_3 Selection

During normal operation, the resistor R_{BYPASS} along with bypass FET R_{DSON} is used to set load wakeup current threshold.

For selecting the MOSFET Q_3, important electrical parameters are the maximum continuous drain current I_D, the maximum drain-to-source voltage $V_{DS(MAX)}$, the maximum drain-to-source voltage $V_{GS(MAX)}$, and the drain-to-source ON resistance R_{DSON}.

Based on the design requirements, SQS182ELNW-T1 is selected and its ratings are:

- 80V $V_{DS(MAX)}$ and ±20V $V_{GS(MAX)}$
- $R_{DS(ON)}$ is 11mΩ typical at 10V V_{GS}
- MOSFET $Q_{g(total)}$ is 26nC typical
- MOSET $V_{GS(th)}$ is 1.4V min
- MOSFET C_{ISS} is 1457pF typical

The recommended range of the short-circuit threshold voltage which is same as load wakeup threshold, $V_{(SCP/LWU)}$, extends from 20mV to 500 mV. Values near the low threshold of 20mV can be affected by the system noise. Values near the upper threshold of 500mV would result in high short-circuit current threshold. To minimize both the concerns, 50mV is selected as the short-circuit or load wakeup threshold voltage.

The $V_{(SCP/LWU)}$ value can also be calculated based on selected R_{ISCP} resistor by following equation:

$$V_{(SCP/LWU)}\left(mV\right) = 2\ \mu A \times R_{ISCP} + 19\ mV \quad (15)$$

R_{BYPASS} resistor value can be selected using below equation:

$$R_{BYPASS} = \frac{V_{(SCP/LWU)}}{I_{LWU}} - R_{DSON_BYPASS} \quad (16)$$

To set 50 mA as load wakeup threshold, R_{BYPASS} value is calculated to be ~2.3Ω.

The average power rating of the bypass resistor can be calculated by following equation:

$$P_{AVG} = {I_{LWU}}^2 \times R_{BYPASS} \quad (17)$$

The average power dissipation of R_{BYPASS} is calculated to be ~5.75mW

The peak power dissipation in the bypass resistor is given by following equation:

$$P_{PEAK} = \frac{{V_{BATT_MAX}}^2}{R_{BYPASS}} \quad (18)$$

The peak power dissipation of R_{BYPASS} is calculated to be ~1565W

Copyright © 2025 Texas Instruments Incorporated

The peak power dissipation time for power-up with short into LPM can be calculated based on following equation:

$$T_{PULSE} = C_{ISS} \times \frac{\left(V_{(G2_GOOD)} - V_{GS(th)}\right)}{I_{(G2)}} + 10\ \mu s \quad (19)$$

where,

$V_{(G2_GOOD)}$ is internal threshold with 7V (typical) value,

$I_{(G2)}$ is 165µA (typical),

$V_{GS(th)}$ is gate to source voltage and C_{ISS} is effective input capacitance of selected bypass FET.

Based on 式 19, T_{PULSE} is calculated to be ~60µs.

Two 4.7Ω, 1.5W, 1% CRCW25124R70FKEGHP resistor are used in parallel to support both average and peak power dissipation for >T_{PULSE} time calculated in 式 19.

TI suggests the designer to share the entire power dissipation profile of bypass resistor with the resistor manufacturer and get their recommendation.

The peak short-circuit current in bypass path can be calculated based on following equation:

$$I_{PEAK_BYPASS} = \frac{V_{IN_MAX}}{R_{BYPASS}} \quad (20)$$

I_{PEAK_BYPASS} is calculated to be 26A based on R_{BYPASS} selected in 式 16.

Setting the Undervoltage Lockout Set Point, R_3 and R_4

The undervoltage lockout (UVLO) can be adjusted using an external voltage divider network of R_3 and R_4 connected between VS, EN/UVLO and GND pins of the device. The values required for setting the undervoltage and overvoltage are calculated by solving below equation:

$$V_{(UVLOR)} = V_{INUVLO} \times \frac{R_4}{R_3 + R_4} \quad (21)$$

For minimizing the input current drawn from the power supply, TI recommends to use higher values of resistance for R_3 and R_4. However, leakage currents due to external active components connected to the resistor string can add error to these calculations. So, the resistor string current, $I_{(R34)}$ must be chosen to be 20 times greater than the leakage current of UVLO pin.

From the device electrical specifications, $V_{(UVLOR)}$ = 1.24V. From the design requirements, V_{INUVLO} is 24V. To solve the equation, first choose the value of R_3 = 470kΩ and use 式 21 to solve for R_4 = 24.5kΩ.

Choose the closest standard 1% resistor values: R_3 = 470kΩ, and R_4 = 24.9kΩ.

Copyright © 2025 Texas Instruments Incorporated

8.2.3 Application Curves

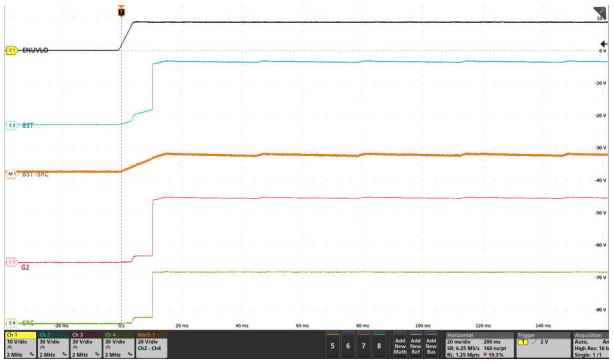

図 8-2. Start-Up Profile of Low Power Path ($\overline{LPM}$ = Low, VIN = 48V, No Load, CBST = 470nF)

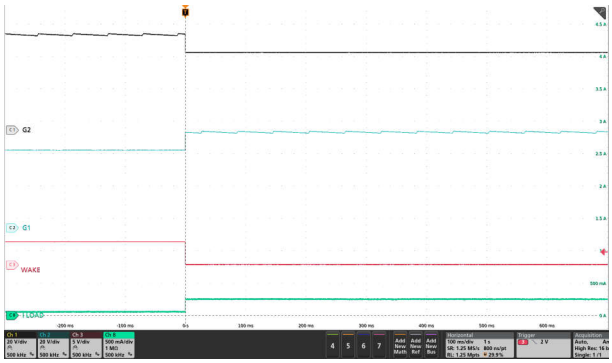

図 8-3. State Transition From LPM to Active Mode ($\overline{LPM}$ = Low, VIN = 48V, EN/UVLO = High)

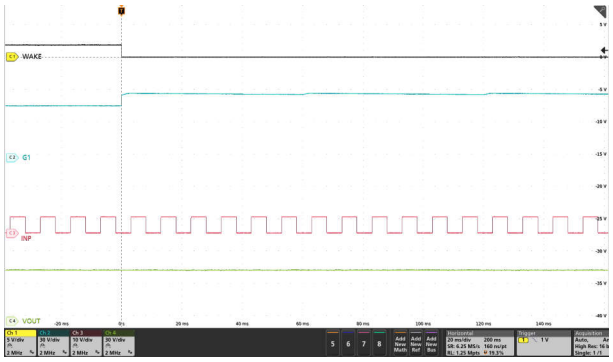

図 8-4. As $\overline{LPM}$ = Low, INP Has No Control on G1 Even After WAKEUP



図 8-5. State Transition From LPM to Active Mode ($\overline{LPM}$ = Low to High, VIN = 48V, No Load)



図 8-6. With $\overline{LPM}$ = Low to High, INP Gained Control on G1 (VIN = 48V, No Load)

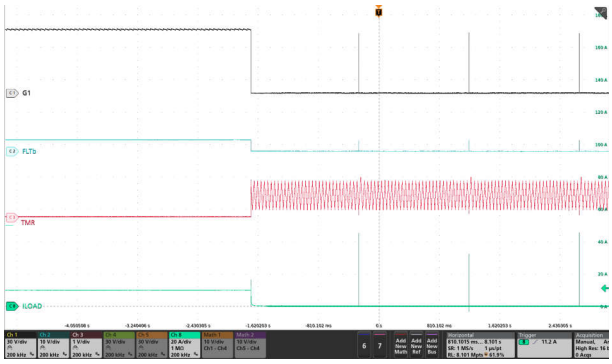

図 8-7. Auto-Retry Response of TPS48130-Q1 for an Overcurrent Fault

Copyright © 2025 Texas Instruments Incorporated

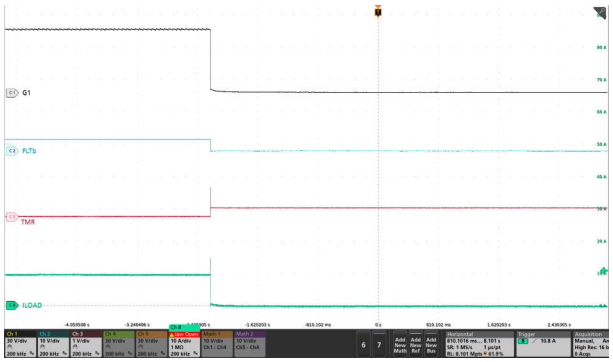

図 8-8. Latch-Off Response of TPS48130-Q1 for an Overcurrent Fault

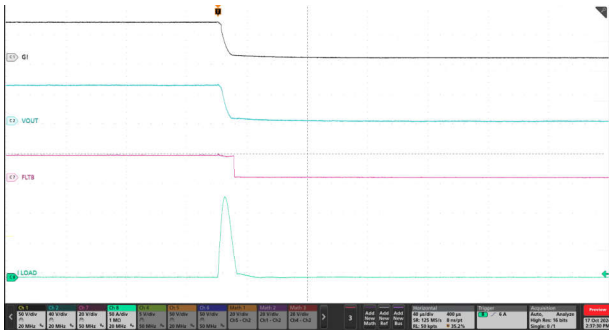

図 8-9. Output Short-Circuit Response of TPS48130-Q1

8.3 Typical Application 2: Driving Power At All Times (PAAT) Loads With Automatic Load Wakeup and Output Bulk Capacitor Charging

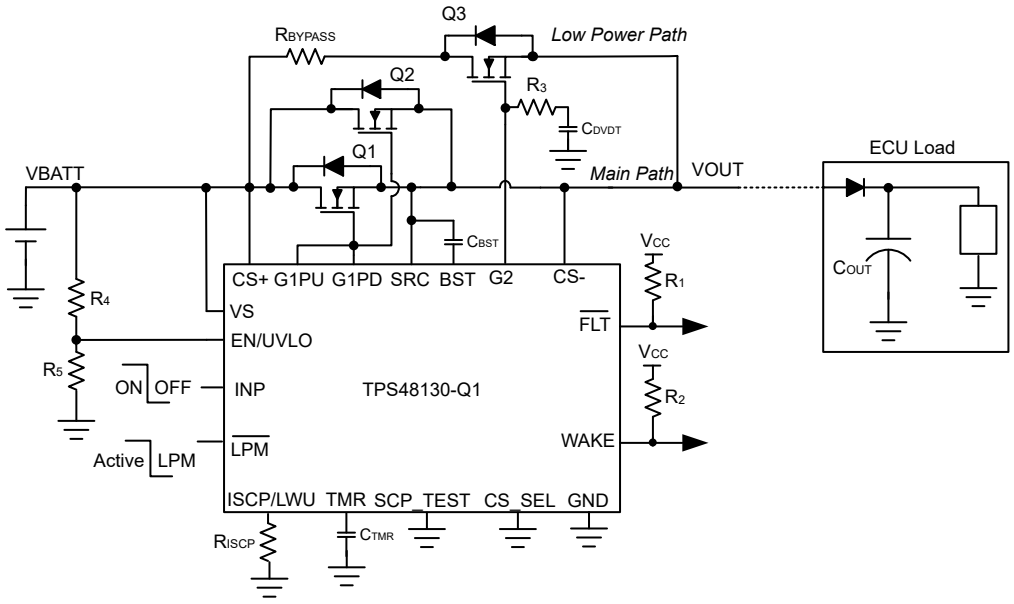

図 8-10. TPS48130-Q1 Application Circuit for Driving Power At All Times (PAAT) Loads With Automatic Load Wakeup and Output Bulk Capacitor Charging

8.3.1 Design Requirements

表 8-2. Design Parameters

PARAMETER	VALUE
Typical input voltage, V_{BATT_MIN} to V_{BATT_MAX}	34V to 60V
Undervoltage lockout set point, V_{INUVLO}	24V
Maximum load current, I_{OUT}	40A
Output bulk capacitor, C_{OUT}	220µF
C_{OUT} charging time, T_{charge}	8ms
Short-circuit protection threshold, I_{SC}	100A
Fault timer period (t_{SC})	20µs
Fault response	Auto-retry

Copyright © 2025 Texas Instruments Incorporated

表 8-2. Design Parameters (続き)

PARAMETER	VALUE
Load wakeup threshold, I_{LWU}	50mA

8.3.2 External Component Selection

By following similar design procedure as outlined in セクション 8.2.2, the external component values are calculated as below:

- C_{BST} = 220nF
- R_{ISCP} = 48.1kΩ to set 100A as short-circuit protection threshold
- C_{TMR} = 1.5nF to set 20µs short-circuit protection delay
- R4 and R5 are selected as 470kΩ and 24.9kΩ respectively to set VIN undervoltage lockout threshold at 24V

Programming the Inrush Current – R_3 and C_{DVDT} Selection

Use following equation to calculate the I_{INRUSH}:

$$I_{INRUSH} = C_{OUT} \times \frac{V_{BATT_MAX}}{T_{charge}} \quad (22)$$

Use following equation to calculate the required C_g based on I_{INRUSH} calculated in 式 23.

$$C_g = \frac{C_{LOAD} \times I_{(G)}}{I_{INRUSH}} \quad (23)$$

Where,

$I_{(G)}$ is 165µA (typical),

To set I_{INRUSH} at 1.65A, C_g value is calculated to be ~22nF.

A series resistor R_g must be used in conjunction with C_g to limit the discharge current from C_g during turn-off . The chosen value of R_3 is 100Ω and C_g is 22nF.

Programming the Load Wakeup Threshold – R_{BYPASS} and Q_3 Selection

During normal operation, the resistor R_{BYPASS} along with bypass FET R_{DSON} is used to set load wakeup current threshold.

For selecting the MOSFET Q_3, important electrical parameters are the maximum continuous drain current I_D, the maximum drain-to-source voltage $V_{DS(MAX)}$, the maximum drain-to-source voltage $V_{GS(MAX)}$, and the drain-to-source ON resistance R_{DSON}.

Based on the design requirements, IAUS200N08S5N023 is selected and its ratings are:

- 80V $V_{DS(MAX)}$ and ±20V $V_{GS(MAX)}$
- $R_{DS(ON)}$ is 2.7mΩ typical at 10V V_{GS}
- MOSFET $Q_{g(total)}$ is 85nC typical
- MOSET $V_{GS(th)}$ is 2.2V min
- MOSFET C_{ISS} is 5900pF typical

The recommended range of the short-circuit threshold voltage which is same as load wakeup threshold, $V_{(SCP/LWU)}$, extends from 20mV to 500mV. Values near the low threshold of 20mV can be affected by the system noise. Values near the upper threshold of 500mV would result in high short-circuit current threshold. To minimize both the concerns, 50mV is selected as the short-circuit or load wakeup threshold voltage.

The $V_{(SCP/LWU)}$ value can also be calculated based on selected R_{ISCP} resistor by following equation:

Copyright © 2025 Texas Instruments Incorporated

$$V_{(SCP/LWU)}\left(mV\right) = 2\ \mu A \times R_{ISCP} + 19\ mV \quad (24)$$

R_{BYPASS} resistor value can be selected using below equation:

$$R_{BYPASS} = \frac{V_{(SCP/LWU)}}{I_{LWU}} - R_{DSON_BYPASS} \quad (25)$$

To set 50 mA as load wakeup threshold, R_{BYPASS} value is calculated to be ~ 2.3Ω.

The average power rating of the bypass resistor can be calculated by following equation:

$$P_{AVG} = {I_{LWU}}^2 \times R_{BYPASS} \quad (26)$$

The average power dissipation of R_{BYPASS} is calculated to be ~5.75 mW.

The peak power dissipation in the bypass resistor is given by following equation:

$$P_{PEAK} = \frac{{V_{BATT_MAX}}^2}{R_{BYPASS}} \quad (27)$$

The peak power dissipation of R_{BYPASS} is calculated to be ~1565 W.

The peak power dissipation time for power-up with short into LPM can be calculated based on following equation:

$$T_{PULSE} = C_{ISS} \times \frac{\left(V_{(G2_GOOD)} - V_{GS(th)}\right)}{I_{(G2)}} + 10\ \mu s \quad (28)$$

where,

$V_{(G2_GOOD)}$ is internal threshold with 7V (typical) value,

$I_{(G2)}$ is 165µA (typical),

$V_{GS(th)}$ is gate to source voltage and C_{ISS} is effective input capacitance of selected bypass FET.

Based on 式 28, T_{PULSE} is calculated to be ~182µs.

Two 4.7Ω, 1.5W, 1% CRCW25124R70FKEGHP resistor are used in parallel to support both average and peak power dissipation for >T_{PULSE} time calculated in 式 28.

TI suggests the designer to share the entire power dissipation profile of bypass resistor with the resistor manufacturer and get their recommendation.

The peak short-circuit current in bypass path can be calculated based on following equation:

$$I_{PEAK_BYPASS} = \frac{V_{IN_MAX}}{R_{BYPASS}} \quad (29)$$

I_{PEAK_BYPASS} is calculated to be 26A based on R_{BYPASS} selected in 式 25.

TI suggest the designer to ensure that operating point (V_{BATT_MAX}, I_{PEAK_BYPASS}) for bypass path (Q_3) is within the SOA curve for >T_{PULSE} time calculated in 式 28.

Copyright © 2025 Texas Instruments Incorporated

8.3.3 Application Curves

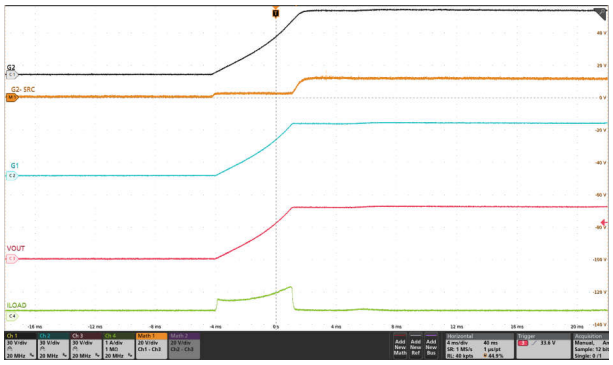

図 8-11. Inrush Current Profile With 220µF at the Output ($\overline{\text{LPM}}$ = Low)

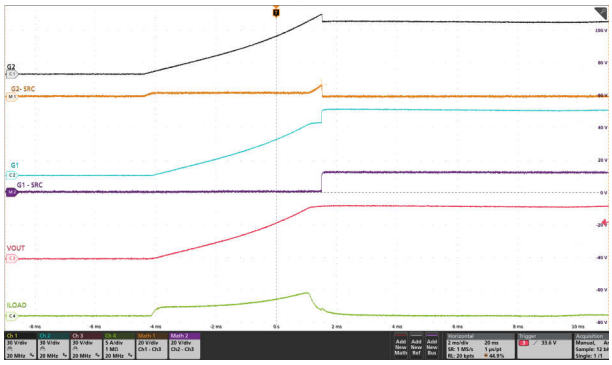

図 8-12. Inrush Current Profile With 220µF at the Output and 0.5A Load ($\overline{\text{LPM}}$ = Low)

8.4 TIDA-020065: Automotive Smart Fuse Reference Design Driving Power At All Times (PAAT) Loads With Automatic Load Wakeup, Output Bulk Capacitor Charging, Bi-directional Current Sensing and Software I^2t

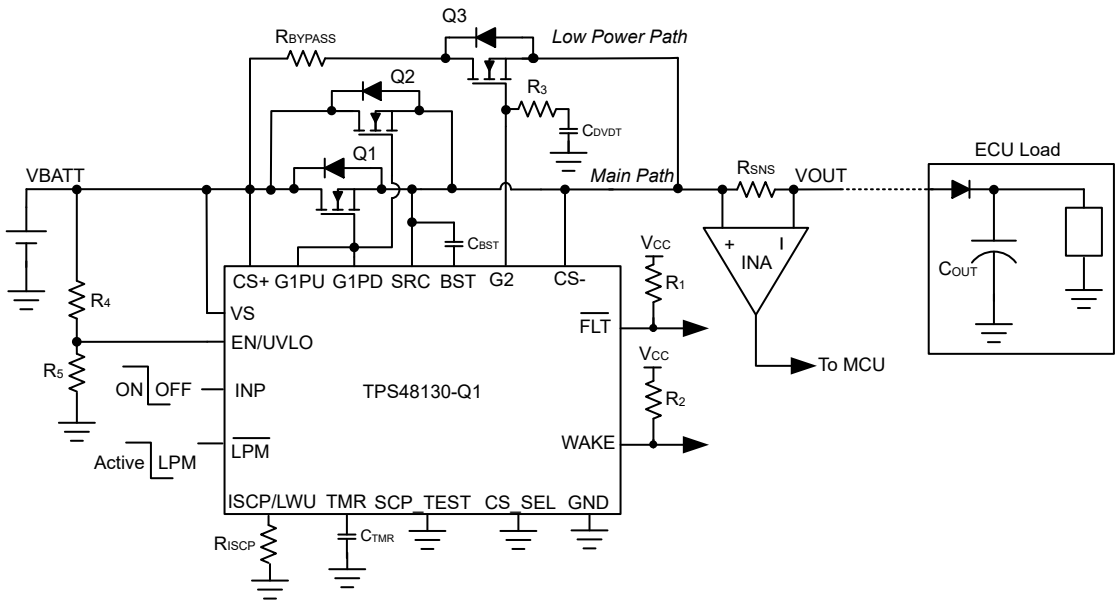

図 8-13. Always ON Automotive E-fuse With Bi-directional Current Sensing and Software I2t

The TIDA-020065 automotive smart fuse design is targeted for power-distribution box and zone-control module systems. As vehicles shift from domain-based architecture to zone-based architecture, these systems aim to replace the standard melting fuse with a semiconductor design to allow for the following:

1. Resettable fuses, which allow for optimized cable wiring as fuses no longer need to be in an easily-accessible location.
2. Improved time-current characteristics across temperature, which allows for optimized harness cable diameter and reduced cost due to less variability between devices compared to standard melting fuses.

Nevertheless, replacing the melting fuse introduces the following challenges:

1. Wire harness protection during overload and short-circuit events while avoiding tripping during peak load transient events

Copyright © 2025 Texas Instruments Incorporated

2. Protect the FETs from uncontrolled inrush currents while charging load bulk capacitors
3. Reducing semiconductor power consumption in key-off state for powered-at-all-times loads

The TIDA-020065 aims to demonstrate how these challenges can be addressed at a system level for high current loads. This design features the TPS48130-Q1 device for driving a main power path in the drive state, and a low power path for the key-off state. This design also features the INA296B3-Q1 device which is used to sense the load current so the MSPM0L1306-Q1 can run a software-based I2t algorithm to replicate fuse behavior.

8.5 Power Supply Recommendations

When the external MOSFETs turn-OFF during the conditions such as INP control, overcurrent protection causing an interruption of the current flow, the input parasitic line inductance generates a positive voltage spike on the input and output parasitic inductance generates a negative voltage spike on the output. The peak amplitude of voltage spikes (transients) depends on the value of inductance in series to the input or output of the device. These transients can exceed the *Absolute Maximum Ratings* of the device if steps are not taken to address the issue. Typical methods for addressing transients include:

- Use of a TVS diode and input capacitor filter combination across input to and GND to absorb the energy and dampen the positive transients.
- Use of a diode or a TVS diode across the output and GND to absorb negative spikes.

The TPS48130-Q1 gets powered from the VS pin. Voltage at this pin must be maintained above $V_{(VS_PORR)}$ level to ensure proper operation. If the input power supply source is noisy with transients, then TI recommends to place a R_{VS} – C_{VS} filter between the input supply line and VS pin to filter out the supply noise. TI recommends an R_{VS} value around 100Ω.

In a case where large di/dt is involved, the system and layout parasitic inductances can generate large differential signal voltages between CS+ and CS– pins. This action can trigger false short-circuit protection and nuisance trips in the system. To overcome such scenario, TI suggests to add a placeholder for RC filter components across the sense resistor (R_{SNS}) and tweak the values during test in the real system. The RC filter components must not be used in current sense designs by MOSFET VDS sensing to avoid impact on the short-circuit protection response.

図 8-14 shows the circuit implementation with optional protection components.

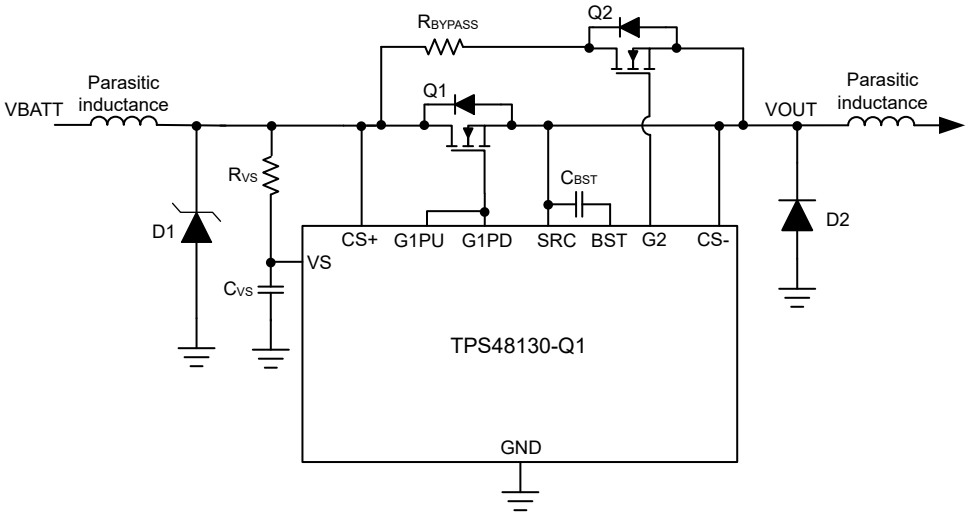

図 8-14. Circuit Implementation With Optional Protection Components For TPS48130-Q1

8.6 Layout

8.6.1 Layout Guidelines

- Place the sense resistor (R_{SNS}) close to the TPS48130-Q1 and then connect R_{SNS} using the Kelvin techniques. Refer to *Choosing the Right Sense Resistor Layout* for more information on the Kelvin techniques.

  For VDS based Current Sensing, follow the same Kelvin techniques across the MOSFET.
- Choose a 0.1µF or higher value ceramic decoupling capacitor between VS terminal and GND for all the applications. Consider adding RC network at the supply pin (VS) of the controller to improve decoupling against the power line disturbances.
- Make the high-current path from the board input to the load, and the return path, parallel and close to each other to minimize loop inductance.
- Place the external MOSFETs close to the controller GATE drive pins (G1PU/G1PD) such that the GATE of the MOSFETs are close to the controller GATE drive pins and forms a shorter GATE loop. Consider adding a place holder for a resistor in series with the Gate of each external MOSFET to damp high frequency oscillations if need arises.
- Place a TVS diode at the input to clamp the voltage transients during hot-plug and fast turn-off events.
- Place the external boot-strap capacitor close to BST and SRC pins to form very short loop.
- Connect the ground connections for the various components around the TPS48130-Q1 directly to each other, and to the TPS48130-Q1 GND, and then connected to the system ground at one point. Do not connect the various component grounds to each other through the high current ground line.

Copyright © 2025 Texas Instruments Incorporated

8.6.2 Layout Example

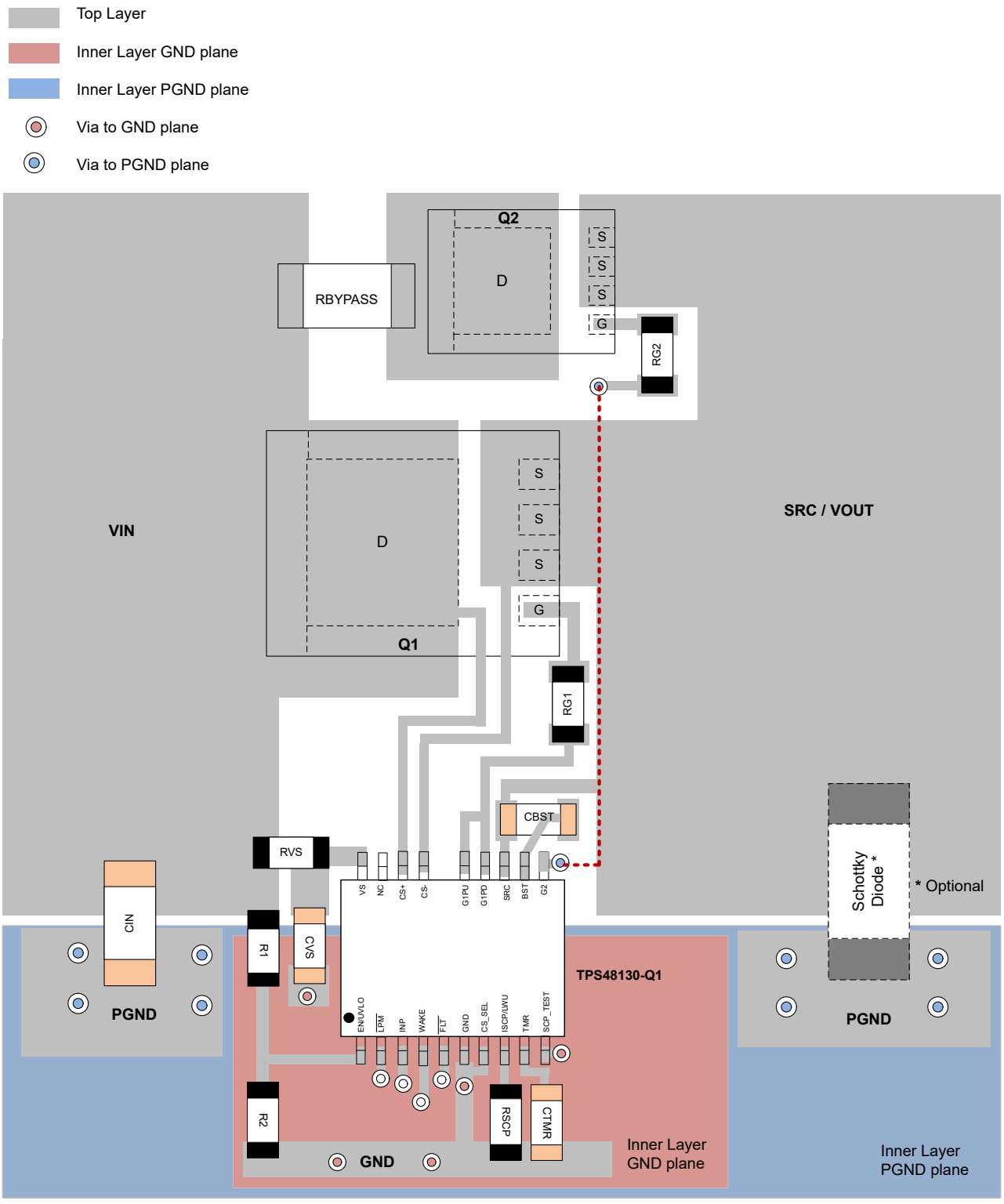

図 8-15. Typical PCB Layout Example for TPS48130-Q1 With Low-Power Path

9 Device and Documentation Support

9.1 ドキュメントの更新通知を受け取る方法

ドキュメントの更新についての通知を受け取るには、www.tij.co.jp のデバイス製品フォルダを開いてください。[通知] をクリックして登録すると、変更されたすべての製品情報に関するダイジェストを毎週受け取ることができます。変更の詳細については、改訂されたドキュメントに含まれている改訂履歴をご覧ください。

9.2 サポート・リソース

テキサス・インスツルメンツ E2E™ サポート・フォーラムは、エンジニアが検証済みの回答と設計に関するヒントをエキスパートから迅速かつ直接得ることができる場所です。既存の回答を検索したり、独自の質問をしたりすることで、設計で必要な支援を迅速に得ることができます。

リンクされているコンテンツは、各寄稿者により「現状のまま」提供されるものです。これらはテキサス・インスツルメンツの仕様を構成するものではなく、必ずしもテキサス・インスツルメンツの見解を反映したものではありません。テキサス・インスツルメンツの使用条件を参照してください。

9.3 Trademarks

テキサス・インスツルメンツ E2E™ is a trademark of Texas Instruments.
すべての商標は、それぞれの所有者に帰属します。

9.4 静電気放電に関する注意事項



この IC は、ESD によって破損する可能性があります。テキサス・インスツルメンツは、IC を取り扱う際には常に適切な注意を払うことを推奨します。正しい取り扱いおよび設置手順に従わない場合、デバイスを破損するおそれがあります。

ESD による破損は、わずかな性能低下からデバイスの完全な故障まで多岐にわたります。精密な IC の場合、パラメータがわずかに変化するだけで公表されている仕様から外れる可能性があるため、破損が発生しやすくなっています。

9.5 用語集

テキサス・インスツルメンツ用語集　　この用語集には、用語や略語の一覧および定義が記載されています。

10 Revision History

資料番号末尾の英字は改訂を表しています。その改訂履歴は英語版に準じています。

DATE	REVISION	NOTES
December 2024	*	Initial Release

11 Mechanical, Packaging, and Orderable Information

The following pages include mechanical, packaging, and orderable information. This information is the most current data available for the designated devices. This data is subject to change without notice and revision of this document. For browser-based versions of this data sheet, refer to the left-hand navigation.

Copyright © 2025 Texas Instruments Incorporated

PACKAGING INFORMATION

Orderable part number	Status (1)	Material type (2)	Package | Pins	Package qty | Carrier	RoHS (3)	Lead finish/ Ball material (4)	MSL rating/ Peak reflow (5)	Op temp (°C)	Part marking (6)
TPS48130QDGXRQ1	Active	Production	VSSOP (DGX) | 19	5000 | LARGE T&R	Yes	NIPDAU	Level-2-260C-1 YEAR	-40 to 125	4813
TPS48130QDGXRQ1.A	Active	Production	VSSOP (DGX) | 19	5000 | LARGE T&R	Yes	NIPDAU	Level-2-260C-1 YEAR	See TPS48130QDGXRQ1	4813

(1) **Status:** For more details on status, see our product life cycle.

(2) **Material type:** When designated, preproduction parts are prototypes/experimental devices, and are not yet approved or released for full production. Testing and final process, including without limitation quality assurance, reliability performance testing, and/or process qualification, may not yet be complete, and this item is subject to further changes or possible discontinuation. If available for ordering, purchases will be subject to an additional waiver at checkout, and are intended for early internal evaluation purposes only. These items are sold without warranties of any kind.

(3) **RoHS values:** Yes, No, RoHS Exempt. See the TI RoHS Statement for additional information and value definition.

(4) **Lead finish/Ball material:** Parts may have multiple material finish options. Finish options are separated by a vertical ruled line. Lead finish/Ball material values may wrap to two lines if the finish value exceeds the maximum column width.

(5) **MSL rating/Peak reflow:** The moisture sensitivity level ratings and peak solder (reflow) temperatures. In the event that a part has multiple moisture sensitivity ratings, only the lowest level per JEDEC standards is shown. Refer to the shipping label for the actual reflow temperature that will be used to mount the part to the printed circuit board.

(6) **Part marking:** There may be an additional marking, which relates to the logo, the lot trace code information, or the environmental category of the part.

Multiple part markings will be inside parentheses. Only one part marking contained in parentheses and separated by a "~" will appear on a part. If a line is indented then it is a continuation of the previous line and the two combined represent the entire part marking for that device.

Important Information and Disclaimer: The information provided on this page represents TI's knowledge and belief as of the date that it is provided. TI bases its knowledge and belief on information provided by third parties, and makes no representation or warranty as to the accuracy of such information. Efforts are underway to better integrate information from third parties. TI has taken and continues to take reasonable steps to provide representative and accurate information but may not have conducted destructive testing or chemical analysis on incoming materials and chemicals. TI and TI suppliers consider certain information to be proprietary, and thus CAS numbers and other limited information may not be available for release.

In no event shall TI's liability arising out of such information exceed the total purchase price of the TI part(s) at issue in this document sold by TI to Customer on an annual basis.

PACKAGE OUTLINE

DGX0019A

VSSOP - 1.1 mm max height

SMALL OUTLINE PACKAGE

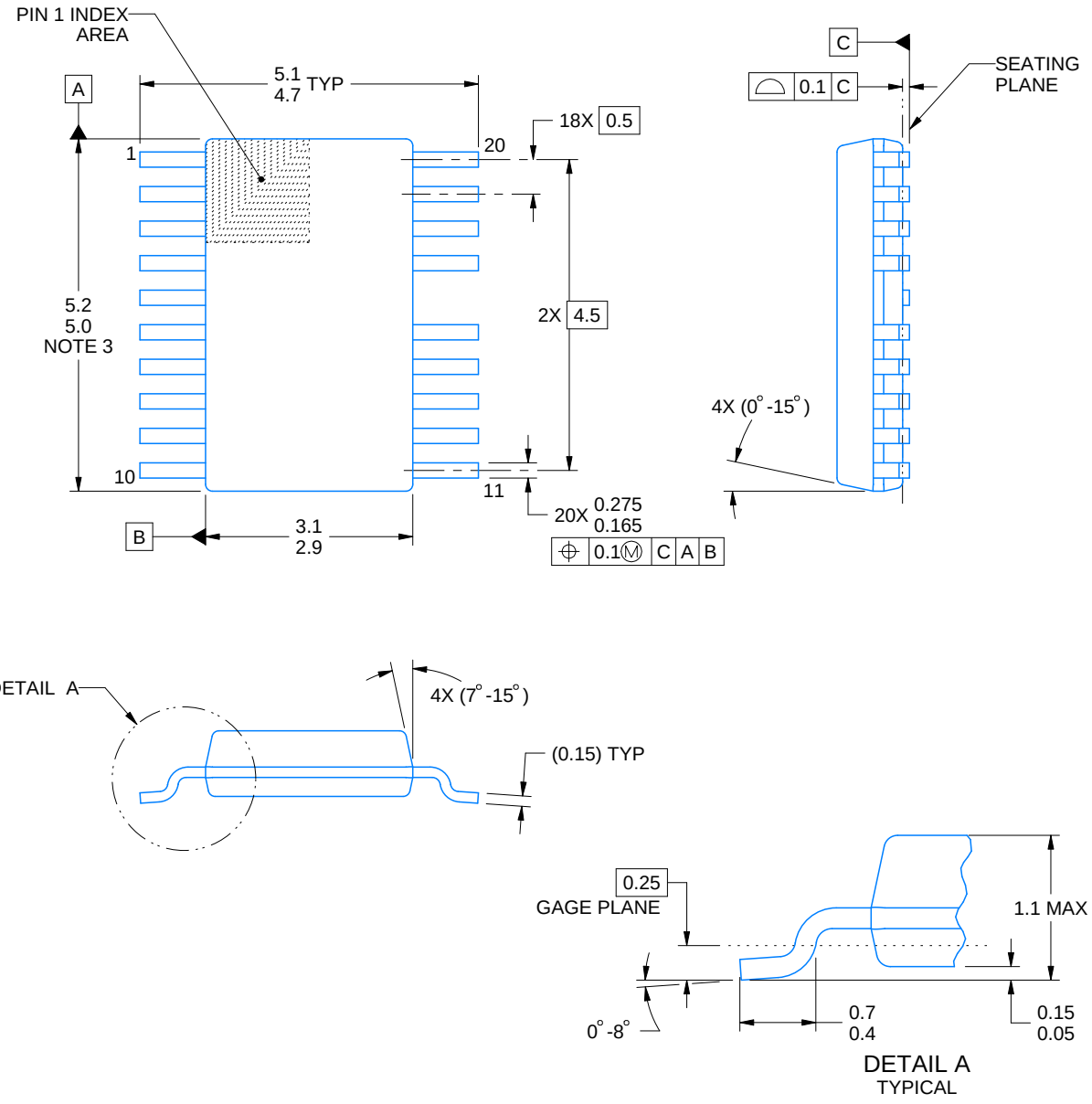

PowerPAD is a trademark of Texas Instruments.

NOTES:

1. All linear dimensions are in millimeters. Any dimensions in parenthesis are for reference only. Dimensioning and tolerancing per ASME Y14.5M.
2. This drawing is subject to change without notice.
3. This dimension does not include mold flash, protrusions, or gate burrs. Mold flash, protrusions, or gate burrs shall not exceed 0.15 mm per side.
4. No JEDEC registration as of July 2021.
5. Features may differ or may not be present.

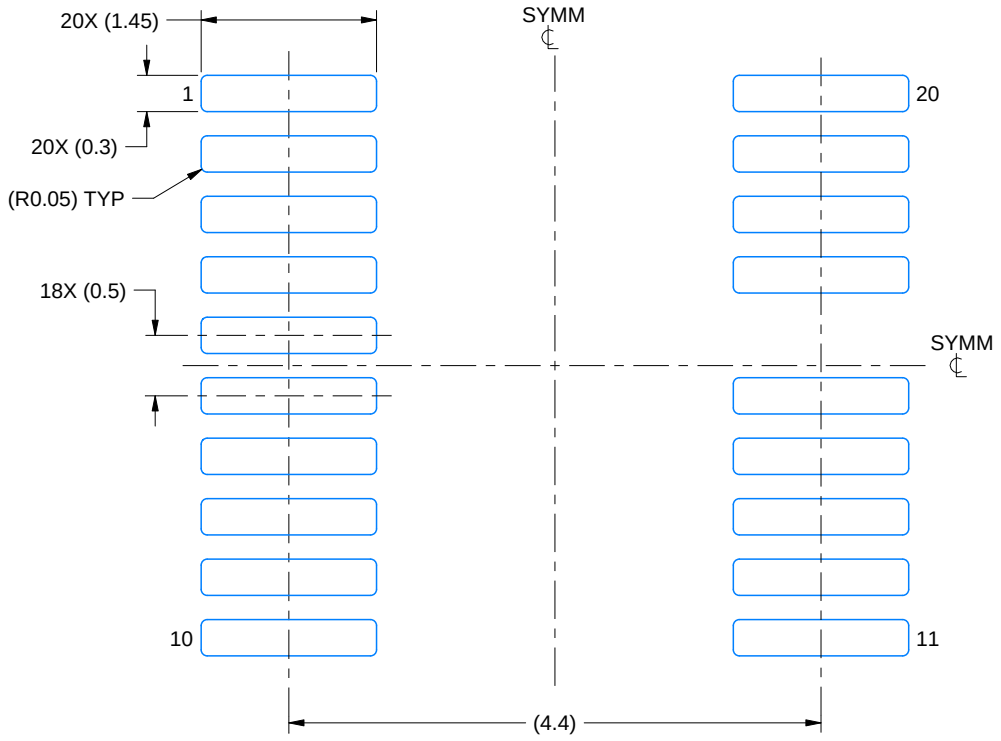

LAND PATTERN EXAMPLE
SCALE: 16X

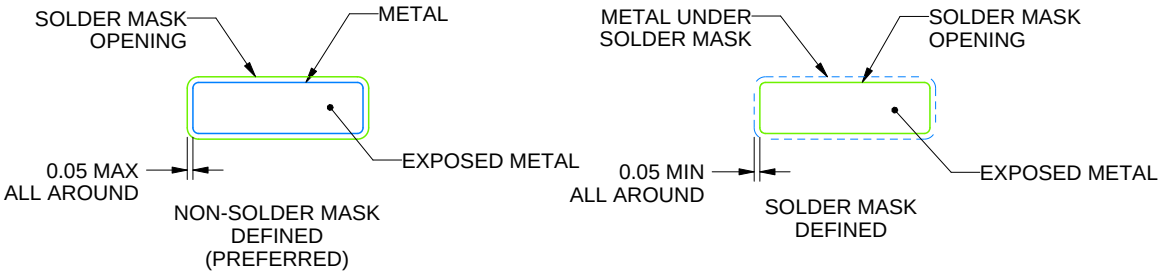

SOLDER MASK DETAILS

4226944/A 07/2021

NOTES: (continued)

6. Publication IPC-7351 may have alternate designs.
7. Solder mask tolerances between and around signal pads can vary based on board fabrication site.
8. This package is designed to be soldered to a thermal pad on the board. For more information, see Texas Instruments literature numbers SLMA002 (www.ti.com/lit/slma002) and SLMA004 (www.ti.com/lit/slma004).
9. Size of metal pad may vary due to creepage requirement.
10. Vias are optional depending on application, refer to device data sheet. It is recommended that vias under paste be filled, plugged or tented.

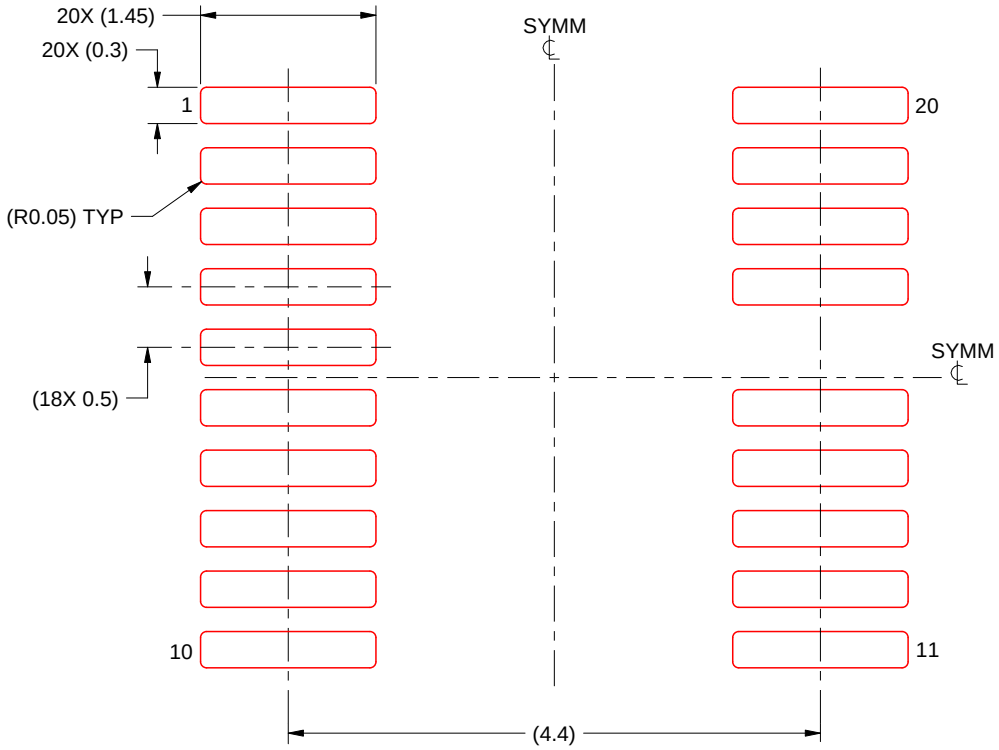

SOLDER PASTE EXAMPLE
BASED ON 0.125 mm THICK STENCIL
SCALE: 16X

4226944/A 07/2021

NOTES: (continued)

11. Laser cutting apertures with trapezoidal walls and rounded corners may offer better paste release. IPC-7525 may have alternate design recommendations.
12. Board assembly site may have different recommendations for stencil design.

重要なお知らせと免責事項

TI は、技術データと信頼性データ (データシートを含みます)、設計リソース (リファレンス デザインを含みます)、アプリケーションや設計に関する各種アドバイス、Web ツール、安全性情報、その他のリソースを、欠陥が存在する可能性のある「現状のまま」提供しており、商品性および特定目的に対する適合性の黙示保証、第三者の知的財産権の非侵害保証を含むいかなる保証も、明示的または黙示的にかかわらず拒否します。

これらのリソースは、TI 製品を使用する設計の経験を積んだ開発者への提供を意図したものです。(1) お客様のアプリケーションに適した TI 製品の選定、(2) お客様のアプリケーションの設計、検証、試験、(3) お客様のアプリケーションに該当する各種規格や、その他のあらゆる安全性、セキュリティ、規制、または他の要件への確実な適合に関する責任を、お客様のみが単独で負うものとします。

上記の各種リソースは、予告なく変更される可能性があります。これらのリソースは、リソースで説明されている TI 製品を使用するアプリケーションの開発の目的でのみ、TI はその使用をお客様に許諾します。これらのリソースに関して、他の目的で複製することや掲載することは禁止されています。TI や第三者の知的財産権のライセンスが付与されている訳ではありません。お客様は、これらのリソースを自身で使用した結果発生するあらゆる申し立て、損害、費用、損失、責任について、TI およびその代理人を完全に補償するものとし、TI は一切の責任を拒否します。

TI の製品は、 TI の販売条件 、 TI の総合的な品質ガイドライン 、 ti.com または TI 製品などに関連して提供される他の適用条件に従い提供されます。TI がこれらのリソースを提供することは、適用される TI の保証または他の保証の放棄の拡大や変更を意味するものではありません。 TI がカスタム、またはカスタマー仕様として明示的に指定していない限り、TI の製品は標準的なカタログに掲載される汎用機器です。

お客様がいかなる追加条項または代替条項を提案する場合も、TI はそれらに異議を唱え、拒否します。

Copyright © 2026, Texas Instruments Incorporated

最終更新日：2025 年 10 月