TPS6040x 非安定化 60mA チャージ・ポンプ電圧インバータ

1 特長

- 入力電源電圧を反転
- 最大 60nA の出力電流
- 3 つの小さい 1µF セラミック・コンデンサのみで動作
- 入力電圧範囲: 1.6 V～5.5 V
- 低出力電流での効率を向上させる省電力モード (TPS60400)
- デバイス静止電流：65µA (標準値)
- 負荷を接続した状態での起動のためのアクティブ・ショットキー・ダイオードを内蔵
- 小型の 5 ピン SOT-23 パッケージ
- 評価モジュール (TPS60400EVM-178) を提供

2 アプリケーション

- LCD バイアス
- RF パワー・アンプの GaAs バイアス
- ポータブル機器のセンサ電源
- バイポーラ・アンプ電源
- 医療機器
- バッテリ駆動機器

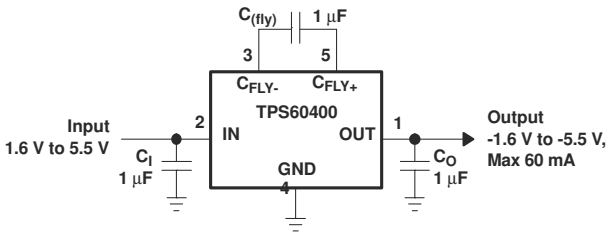

代表的なアプリケーション

3 概要

TPS6040x ファミリのデバイスは、1.6V～5.5V の入力電圧から負の非安定化出力電圧を生成します。このデバイスは通常、事前にレギュレートされた 5V または 3.3V 電源レールから電力供給されます。入力電圧範囲が広いため、2～3 個の NiCd、NiMH、アルカリ・バッテリ・セルだけでなく、1 個のリチウムイオン・セルでも電力を供給できます。

3 つの外付け 1µF コンデンサのみで、完全な DC-DC チャージ・ポンプ・インバータを構成できます。5 ピンの SOT-23 パッケージを採用しているため、50mm^2 の基板占有面積で完全なコンバータを構成できます。負荷を接続した状態で起動させる際に通常必要なショットキー ダイオードを集積回路に置き換えることで、基板占有面積と部品数をさらに低減しています。

TPS6040x は、広い出力電流範囲にわたって 90% (標準値) を超える変換効率で 60mA の最大出力電流を供給できます。20kHz、50kHz、250kHz の固定周波数で動作する 3 種類のデバイスを提供しています。TPS60400 は、広い負荷範囲のアプリケーションで動作電流を低減するための可変スイッチング周波数機能を備えているため、小さい値のコンデンサを使用して設計できます。

製品情報

型番	パッケージ (1) (1 ページ)	本体サイズ (公称)
TPS6040x	SOT-23 (5)	2.90mm x 1.60mm

(1) 利用可能なすべてのパッケージについては、このデータシートの末尾にある注文情報を参照してください。

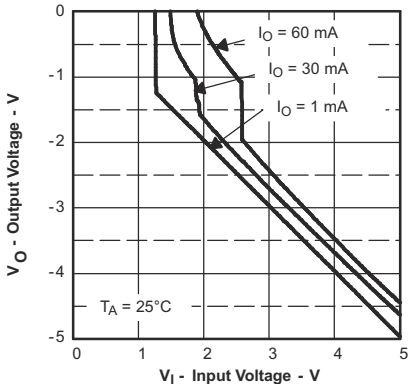

出力電圧と入力電圧との関係

英語版の TI 製品についての情報を翻訳したこの資料は、製品の概要を確認する目的で便宜的に提供しているものです。該当する正式な英語版の最新情報は、www.ti.com で閲覧でき、その内容が常に優先されます。TI では翻訳の正確性および妥当性につきましては一切保証いたしません。実際の設計などの前には、必ず最新版の英語版をご参照くださいますようお願いいたします。

Table of Contents

1 特長.....1
2 アプリケーション.....1
3 概要.....1
4 Revision History.....2
5 Device Comparison Table.....3
6 Pin Configuration and Functions.....3
7 Specifications.....4
7.1 Absolute Maximum Ratings.....4
7.2 Handling Ratings.....4
7.3 Recommended Operating Conditions.....4
7.4 Thermal Information.....4
7.5 Electrical Characteristics.....5
7.6 Typical Characteristics.....5
8 Detailed Description.....10
8.1 Overview.....10
8.2 Functional Block Diagram.....10
8.3 Feature Description.....11
8.4 Device Functional Modes.....12
9 Application and Implementation.....13
9.1 Application Information.....13
9.2 Typical Application.....13
9.3 System Examples.....16
10 Power Supply Recommendations.....20
11 Layout.....21
11.1 Layout Guidelines.....21
11.2 Layout Example.....21
12 Device and Documentation Support.....22
12.1 Device Support.....22
12.2 Related Links.....22
12.3 Trademarks.....22
12.4 Electrostatic Discharge Caution.....22
12.5 Glossary.....22
13 Mechanical, Packaging, and Orderable Information.....22

4 Revision History

資料番号末尾の英字は改訂を表しています。その改訂履歴は英語版に準じています。

Changes from Revision B (April 2015) to Revision C (October 2020)	Page
• 文書全体にわたって表、図、相互参照の採番方法を更新	1

Changes from Revision A (November 2004) to Revision B (April 2015)	Page
• 「取り扱い定格」の表、「*機能説明*」セクション、「*デバイスの機能モード*」セクション、「*アプリケーションと実装*」セクション、「*電源に関する推奨事項*」セクション、「*レイアウト*」セクション、「*デバイスおよびドキュメントのサポート*」セクション、「*メカニカル、パッケージ、および注文情報*」セクションを追加	1

Copyright © 2020 Texas Instruments Incorporated

5 Device Comparison Table

PART NUMBER(1)	MARKING DBV PACKAGE	TYPICAL FLYING CAPACITOR [µF]	FEATURE
TPS60400DBV	PFKI	1	Variable switching frequency 50 kHz-250 kHz
TPS60401DBV	PFLI	10	Fixed frequency 20 kHz
TPS60402DBV	PFMI	3.3	Fixed frequency 50 kHz
TPS60403DBV	PFNI	1	Fixed frequency 250 kHz

(1) The DBV package is available taped and reeled. Add R suffix to device type (for example, TPS60400DBVR) to order quantities of 3000 devices per reel. Add T suffix to device type (for example, TPS60400DBVT) to order quantities of 250 devices per reel.

6 Pin Configuration and Functions

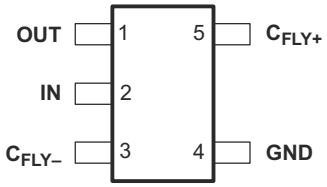

図 6-1. DBV Package 5 Pins Top View

表 6-1. Pin Functions

PIN		I/O	DESCRIPTION
NAME	NO.		
C_{FLY+}	5		Positive terminal of the flying capacitor $C_{(fly)}$
C_{FLY-}	3		Negative terminal of the flying capacitor $C_{(fly)}$
GND	4		Ground
IN	2	I	Supply input. Connect to an input supply in the 1.6-V to 5.5-V range. Bypass IN to GND with a capacitor that has the same value as the flying capacitor.
OUT	1	O	Power output with V_O = -V_I Bypass OUT to GND with the output filter capacitor C_O.

Copyright © 2020 Texas Instruments Incorporated

7 Specifications

7.1 Absolute Maximum Ratings

over operating free-air temperature range (unless otherwise noted)(1)

		MIN	MAX	UNIT
Voltage range	IN to GND	-0.3	5.5	V
	OUT to GND	-5.5	0.3	V
	C_{FLY-} to GND	0.3	V_O - 0.3	V
	C_{FLY+} to GND	-0.3 V	V_I + 0.3	V
Continuous power dissipation		See セクション 9.2.1.2.5		
Continuous output current			80	mA
Maximum junction temperature, T_J			150	°C

(1) Stresses beyond those listed under *Absolute Maximum Ratings* may cause permanent damage to the device. These are stress ratings only, and functional operation of the device at these or any other conditions beyond those indicated under *Recommended Operating Conditions* is not implied. Exposure to absolute-maximum-rated conditions for extended periods may affect device reliability.

7.2 Handling Ratings

			MIN	MAX	UNIT
T_{stg}	Storage temperature range		-55°C	150°C	°C
$V_{(ESD)}$	Electrostatic discharge	Human body model (HBM), per ANSI/ESDA/JEDEC JS-001, all pins(1)	-1000	1000	V
		Charged device model (CDM), per JEDEC specification JESD22-C101, all pins(2)	-500	500	

(1) JEDEC document JEP155 states that 500-V HBM allows safe manufacturing with a standard ESD control process.
(2) JEDEC document JEP157 states that 250-V CDM allows safe manufacturing with a standard ESD control process.

7.3 Recommended Operating Conditions

	MIN	NOM	MAX	UNIT
Input voltage range, V_I	1.8		5.25	V
Output current range at OUT, I_O			60	mA
Input capacitor, C_I	0	$C_{(fly)}$		µF
Flying capacitor, $C_{(fly)}$		1		µF
Output capacitor, C_O		1	100	µF
Operating junction temperature, T_J	-40		125	°C

7.4 Thermal Information

THERMAL METRIC(1)		TPS6040x DBV 5 PINS	UNIT
$R_{\theta JA}$	Junction-to-ambient thermal resistance	221.2	°C/W
$R_{\theta JC(top)}$	Junction-to-case (top) thermal resistance	81.9	
$R_{\theta JB}$	Junction-to-board thermal resistance	39.8	
ψ_{JT}	Junction-to-top characterization parameter	3.3	
ψ_{JB}	Junction-to-board characterization parameter	38.9	
$R_{\theta JC(bot)}$	Junction-to-case (bottom) thermal resistance	n/a	

(1) For more information about traditional and new thermal metrics, see the *IC Package Thermal Metrics* application report, SPRA953.

Copyright © 2020 Texas Instruments Incorporated

7.5 Electrical Characteristics

$C_I = C_{(fly)} = C_O$ (according to Table 1), T_C = -40°C to 85°C, V_I = 5 V over recommended operating free-air temperature range (unless otherwise noted)

PARAMETER			TEST CONDITIONS		MIN	TYP	MAX	UNIT
V_I	Supply voltage range		At T_C = -40°C to 85°C, R_L = 5 kΩ		1.8		5.25	V
			At T_C≥ 0°C, R_L= 5 kΩ		1.6			
I_O	Maximum output current at V_O				60			mA
V_O	Output voltage					-V_I		V
V_{P-P}	Output voltage ripple	TPS60400	I_O = 5 mA	$C_{(fly)}$ = 1 µF, C_O = 2.2 µF		35		mV_{P-P}
		TPS60401		$C_{(fly)}$ = C_O = 10 µF		20		
		TPS60402		$C_{(fly)}$ = C_O = 3.3 µF		20		
		TPS60403		$C_{(fly)}$ = C_O = 1 µF		15		
I_Q	Quiescent current (no-load input current)	TPS60400	At V_I = 5 V			125	270	µA
		TPS60401				65	190	
		TPS60402				120	270	
		TPS60403				425	700	
		TPS60400	At T ≤ 60°C, V_I = 5 V				210	µA
		TPS60401					135	
		TPS60402					210	
		TPS60403					640	
f_{OSC}	Internal switching frequency	TPS60400	VCO version		30	50-250	350	kHz
		TPS60401			13	20	28	
		TPS60402			30	50	70	
		TPS60403			150	250	300	
	Impedance at 25°C, V_I = 5 V	TPS60400	$C_I = C_{(fly)} = C_O$ = 1 µF			12	15	Ω
		TPS60401	$C_I = C_{(fly)} = C_O$ = 10 µF			12	15	
		TPS60402	$C_I = C_{(fly)} = C_O$ = 3.3 µF			12	15	
		TPS60403	$C_I = C_{(fly)} = C_O$ = 1 µF			12	15	

7.6 Typical Characteristics

表 7-1. Table of Graphs

			FIGURE
η	Efficiency	vs Output current at 3.3 V, 5 V TPS60400, TPS60401, TPS60402, TPS60403	図 7-1, 図 7-2
I_I	Input current	vs Output current TPS60400, TPS60401, TPS60402, TPS60403	図 7-3, 図 7-4
I_S	Supply current	vs Input voltage TPS60400, TPS60401, TPS60402, TPS60403	図 7-5, 図 7-6
	Output resistance	vs Input voltage at -40°C, 0°C, 25°C, 85°C TPS60400, $C_I = C_{(fly)} = C_O$ = 1 µF TPS60401, $C_I = C_{(fly)} = C_O$ = 10 µF TPS60402 , $C_I = C_{(fly)} = C_O$ = 3.3 µF TPS60403, $C_I = C_{(fly)} = C_O$ = 1 µF	図 7-7, 図 7-8, 図 7-9, 図 7-10
V_O	Output voltage	vs Output current at 25°C, V_{IN}=1.8 V, 2.5 V, 3.3 V, 5 V TPS60400, $C_I = C_{(fly)} = C_O$ = 1 µF TPS60401, $C_I = C_{(fly)} = C_O$ = 10 µF TPS60402 , $C_I = C_{(fly)} = C_O$ = 3.3 µF TPS60403, $C_I = C_{(fly)} = C_O$ = 1 µF	図 7-11, 図 7-12, 図 7-13, 図 7-14
f_{OSC}	Oscillator frequency	vs Temperature at V_I = 1.8 V, 2.5 V, 3.3 V, 5 V TPS60400, TPS60401, TPS60402, TPS60403	図 7-15, 図 7-16, 図 7-17, 図 7-18

Copyright © 2020 Texas Instruments Incorporated

表 7-1. Table of Graphs (continued)

			FIGURE
f_{OSC}	Oscillator frequency	vs Output current TPS60400 at 2 V, 3.3 V, 5.0 V	図 7-19

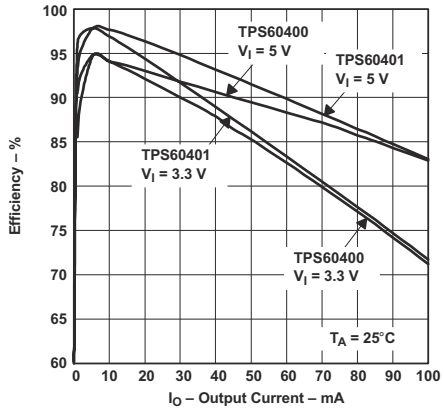

図 7-1. Efficiency vs Output Current

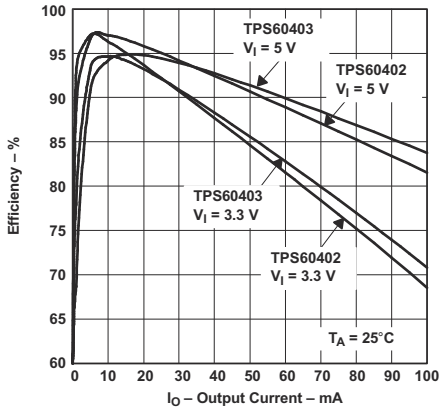

図 7-2. Efficiency vs Output Current

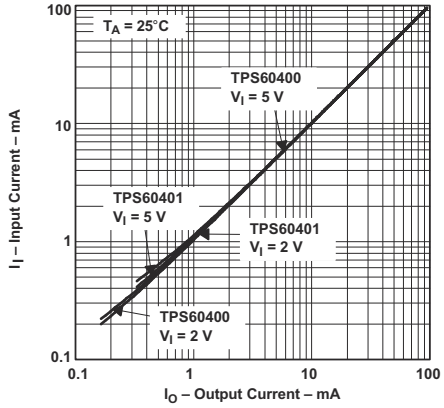

図 7-3. Input Current vs Output Current

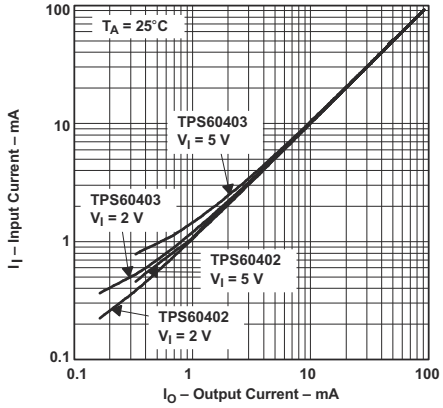

図 7-4. Input Current vs Output Current

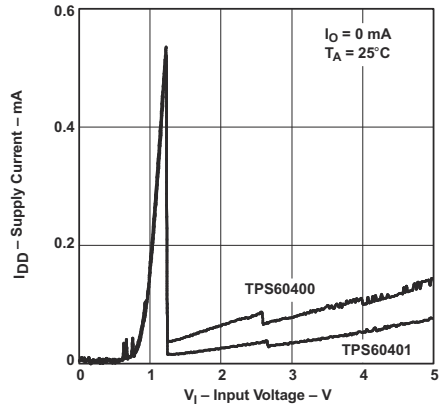

図 7-5. Supply Current vs Input Voltage

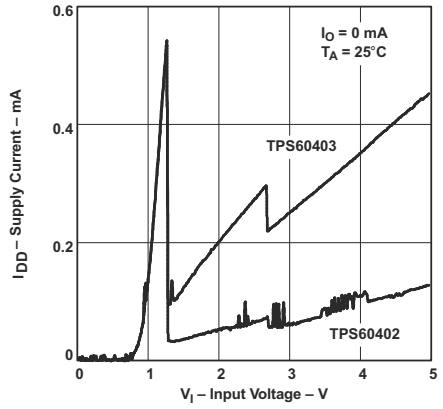

図 7-6. Supply Current vs Input Voltage

Copyright © 2020 Texas Instruments Incorporated

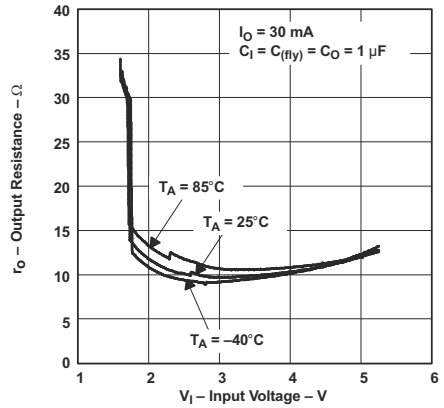

図 7-7. Output Resistance vs Input Voltage

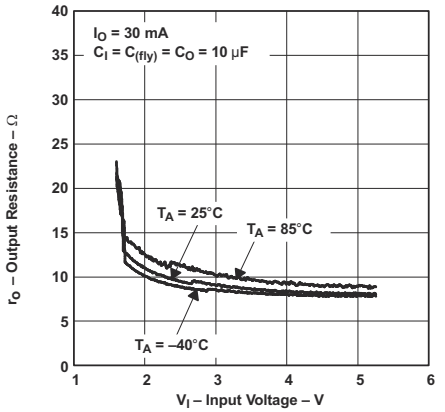

図 7-8. Output Resistance vs Input Voltage

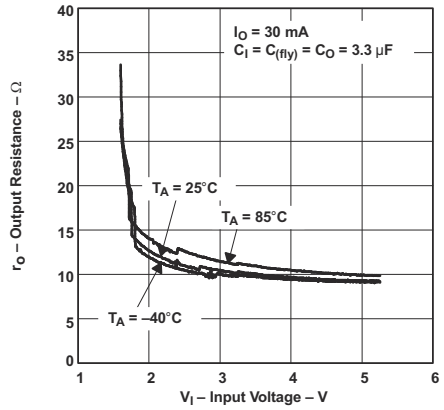

図 7-9. Output Resistance vs Input Voltage

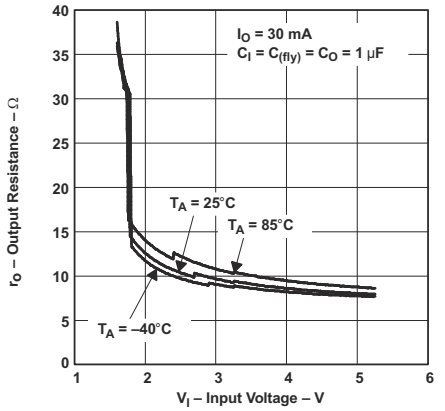

図 7-10. Output Resistance vs Input Voltage

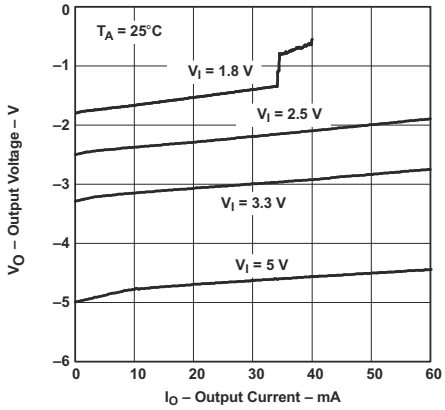

図 7-11. Output Voltage vs Output Current

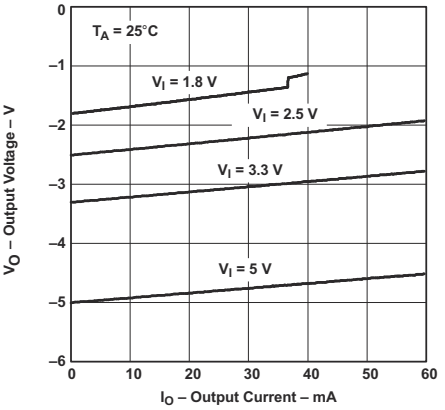

図 7-12. Output Voltage vs Output Current

Copyright © 2020 Texas Instruments Incorporated

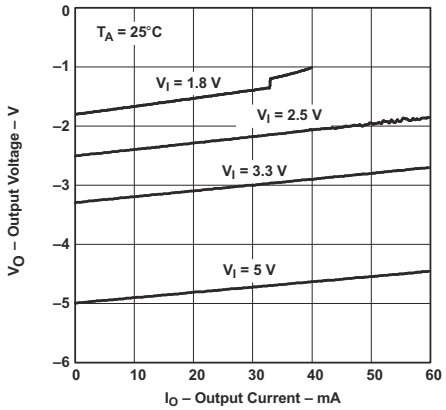

図 7-13. Output Voltage vs Output Current

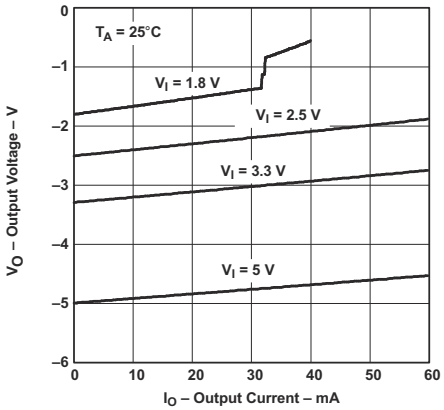

図 7-14. Output Voltage vs Output Current

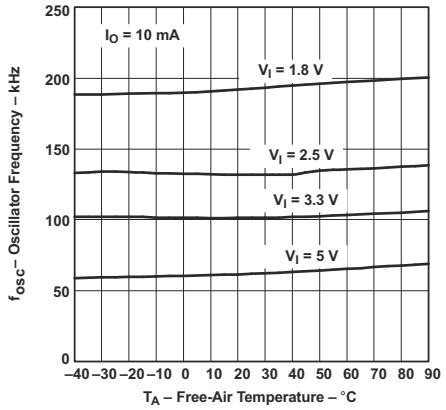

図 7-15. Oscillator Frequency vs Free-Air Temperature

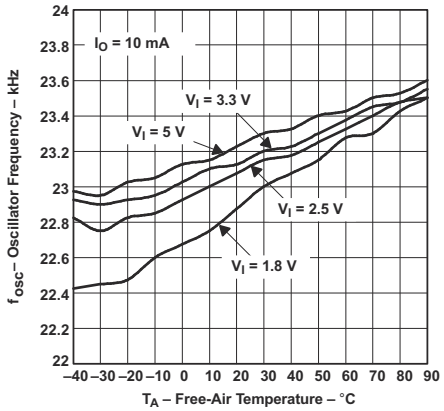

図 7-16. Oscillator Frequency vs Free-Air Temperature

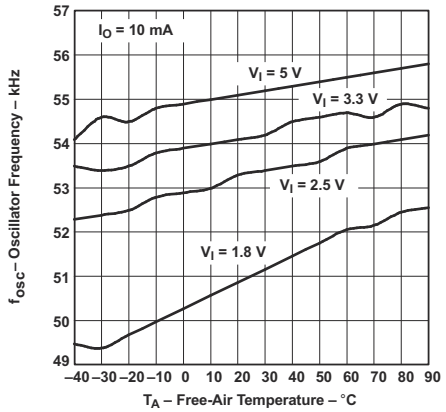

図 7-17. Oscillator Frequency vs Free-Air Temperature

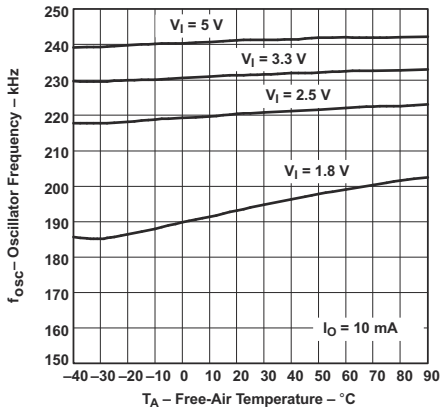

図 7-18. Oscillator Frequency vs Free-Air Temperature

Copyright © 2020 Texas Instruments Incorporated

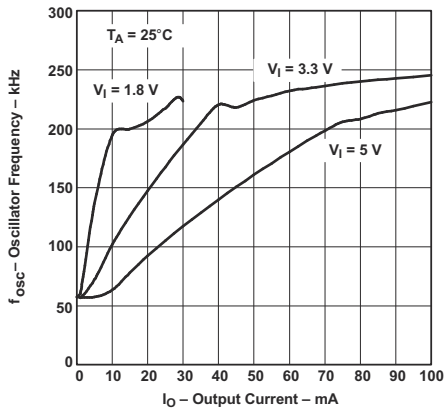

図 7-19. Oscillator Frequency vs Output Current

8 Detailed Description

8.1 Overview

The TPS60400, TPS60401 charge pumps invert the voltage applied to their input. For the highest performance, use low equivalent series resistance (ESR) capacitors (for example, ceramic). During the first half-cycle, switches S2 and S4 open, switches S1 and S3 close, and capacitor ($C_{(fly)}$) charges to the voltage at V_I. During the second half-cycle, S1 and S3 open, S2 and S4 close. This connects the positive terminal of $C_{(fly)}$ to GND and the negative to V_O. By connecting $C_{(fly)}$ in parallel, C_O is charged negative. The actual voltage at the output is more positive than $-V_I$, since switches S1-S4 have resistance and the load drains charge from C_O.

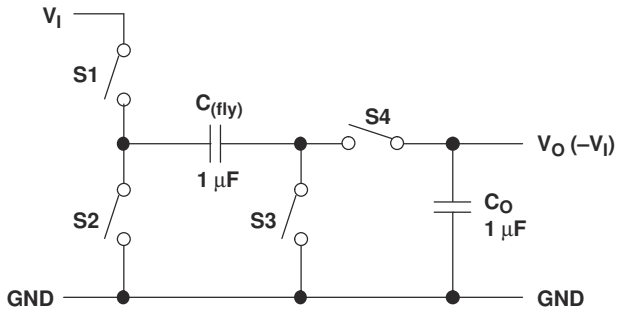

図 8-1. Operating Principle

8.2 Functional Block Diagram

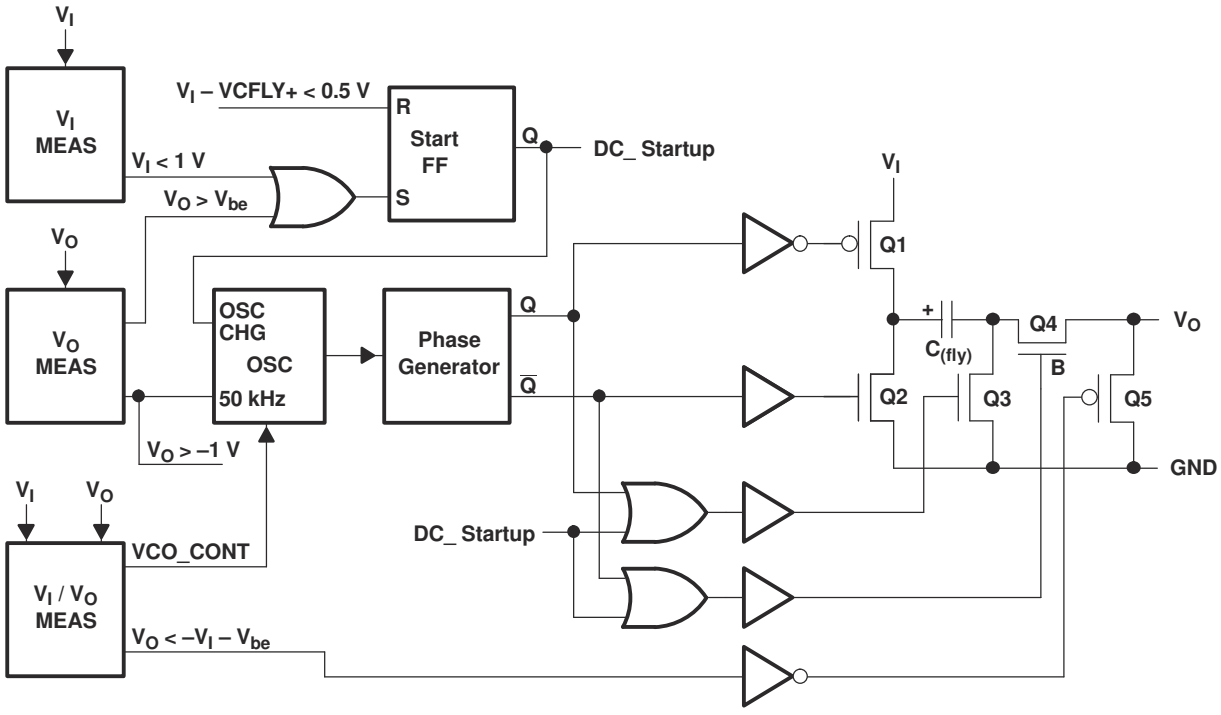

Copyright © 2020 Texas Instruments Incorporated

8.3 Feature Description

8.3.1 Charge-Pump Output Resistance

The TPS6040x devices are not voltage regulators. The charge pump's output source resistance is approximately 15 Ω at room temperature (with V_I = 5 V), and V_O approaches -5 V when lightly loaded. V_O droops toward GND as load current increases.

$$V_O = -(V_I - R_O \times I_O) \tag{1}$$

$$R_O \approx \frac{1}{f\text{osc} \times C_{(fly)}} + 4\left(2R_{SWITCH} + ESR_{CFLY}\right) + ESR_{CO} \tag{2}$$

R_O = output resistance of the converter

8.3.2 Efficiency Considerations

The power efficiency of a switched-capacitor voltage converter is affected by three factors: the internal losses in the converter IC, the resistive losses of the capacitors, and the conversion losses during charge transfer between the capacitors. The internal losses are associated with the internal functions of the IC, such as driving the switches, oscillator, and so forth. These losses are affected by operating conditions such as input voltage, temperature, and frequency. The next two losses are associated with the output resistance of the voltage converter circuit. Switch losses occur because of the on-resistance of the MOSFET switches in the IC. Charge-pump capacitor losses occur because of their ESR. The relationship between these losses and the output resistance is as follows:

$$P_{CAPACITOR\ LOSSES} + P_{CONVERSION\ LOSSES} = I_O^2 \times R_O \tag{3}$$

R_{SWITCH} = resistance of a single MOSFET-switch inside the converter
f_{OSC} = oscillator frequency

The first term is the effective resistance from an ideal switched-capacitor circuit. Conversion losses occur during the charge transfer between $C_{(fly)}$ and C_O when there is a voltage difference between them. The power loss is:

$$P_{CONV.LOSS} = \left[\frac{1}{2} \times C_{(fly)}\left(V_I^2 - V_O^2\right) + \frac{1}{2}C_O\left(V_{RIPPLE}^2 - 2V_O V_{RIPPLE}\right)\right] \times f_{osc} \tag{4}$$

The efficiency of the TPS6040x devices is dominated by their quiescent supply current at low output current and by their output impedance at higher current.

$$\eta \cong \frac{I_O}{I_O + I_Q}\left(1 - \frac{I_O \times R_O}{V_I}\right) \tag{5}$$

Where, I_Q = quiescent current.

Copyright © 2020 Texas Instruments Incorporated

8.4 Device Functional Modes

8.4.1 Active-Schottky Diode

For a short period of time, when the input voltage is applied, but the inverter is not yet working, the output capacitor is charged positive by the load. To prevent the output being pulled above GND, a Schottky diode must be added in parallel to the output. The function of this diode is integrated into the TPS6040x devices, which gives a defined startup performance and saves board space.

A current sink and a diode in series can approximate the behavior of a typical, modern operational amplifier. 図 8-2 shows the current into this typical load at a given voltage. The TPS6040x devices are optimized to start into these loads.

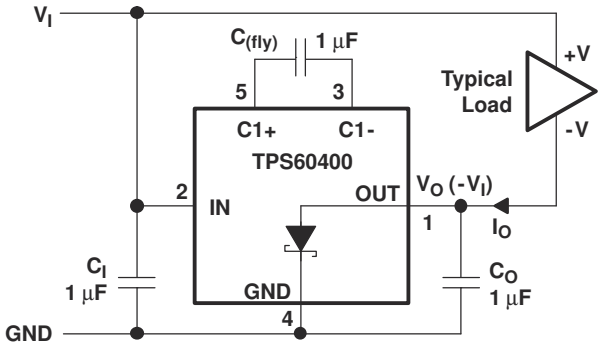

図 8-2. Typical Load

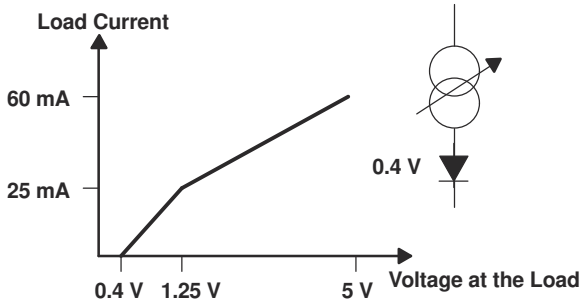

図 8-3. Maximum Start-Up Current

Copyright © 2020 Texas Instruments Incorporated

9 Application and Implementation

Note

Information in the following applications sections is not part of the TI component specification, and TI does not warrant its accuracy or completeness. TI's customers are responsible for determining suitability of components for their purposes. Customers should validate and test their design implementation to confirm system functionality.

9.1 Application Information

The TPS6040x is a family of devices that generate an unregulated negative output voltage from an input voltage ranging from 1.6 V to 5.5 V.

9.2 Typical Application

9.2.1 Voltage Inverter

The design guidelines provide a component selection to operate the device within the recommended operating conditions.

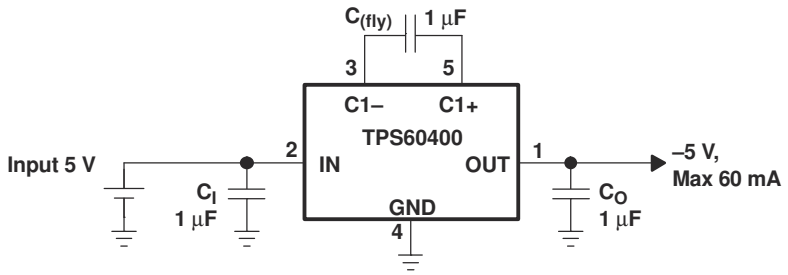

図 9-1. Typical Operating Circuit

9.2.1.1 Design Requirements

The TPS6040x is connected to generate a negative output voltage from a positive input.

9.2.1.2 Detailed Design Procedure

The most common application for these devices is a charge-pump voltage inverter (see 図 9-1). This application requires only two external components; capacitors $C_{(fly)}$ and C_O, plus a bypass capacitor, if necessary. Refer to the capacitor selection section for suggested capacitor types.

For the maximum output current and best performance, three ceramic capacitors of 1 µF (TPS60400, TPS60403) are recommended. For lower currents or higher allowed output voltage ripple, other capacitors can also be used. It is recommended that the output capacitors has a minimum value of 1 µF. With flying capacitors lower than 1 µF, the maximum output power decreases.

9.2.1.2.1 Capacitor Selection

To maintain the lowest output resistance, use capacitors with low ESR (see 表 9-1). The charge-pump output resistance is a function of $C_{(fly)}$'s and C_O's ESR. Therefore, minimizing the charge-pump capacitor's ESR minimizes the total output resistance. The capacitor values are closely linked to the required output current and the output noise and ripple requirements. It is possible to only use 1-µF capacitors of the same type.

9.2.1.2.2 Input Capacitor (C_I)

Bypass the incoming supply to reduce its ac impedance and the impact of the TPS6040x switching noise. The recommended bypassing depends on the circuit configuration and where the load is connected. When the inverter is loaded from OUT to GND, current from the supply switches between 2 x I_O and zero. Therefore, use a large bypass capacitor (for example, equal to the value of $C_{(fly)}$) if the supply has high ac impedance. When the inverter is loaded from IN to OUT, the circuit draws 2 × I_O constantly, except for short switching spikes. A 0.1-µF bypass capacitor is sufficient.

Copyright © 2020 Texas Instruments Incorporated

9.2.1.2.3 Flying Capacitor ($C_{(fly)}$)

Increasing the flying capacitor's size reduces the output resistance. Small values increases the output resistance. Above a certain point, increasing $C_{(fly)}$'s capacitance has a negligible effect, because the output resistance becomes dominated by the internal switch resistance and capacitor ESR.

9.2.1.2.4 Output Capacitor (C_O)

Increasing the output capacitor's size reduces the output ripple voltage. Decreasing its ESR reduces both output resistance and ripple. Smaller capacitance values can be used with light loads if higher output ripple can be tolerated. Use the following equation to calculate the peak-to-peak ripple.

$$V_{O(ripple)} = \frac{I_O}{f_{osc} \times C_O} + 2 \times I_O \times ESR_{CO} \quad (6)$$

表 9-1. Recommended Capacitor Values

DEVICE	V_I [V]	I_O [mA]	C_I [µF]	$C_{(fly)}$ [µF]	C_O [µF]
TPS60400	1.8…5.5	60	1	1	1
TPS60401	1.8…5.5	60	10	10	10
TPS60402	1.8…5.5	60	3.3	3.3	3.3
TPS60403	1.8…5.5	60	1	1	1

表 9-2. Recommended Capacitors

MANUFACTURER	PART NUMBER	SIZE	CAPACITANCE	TYPE
Taiyo Yuden	EMK212BJ474MG	0805	0.47 µF	Ceramic
	LMK212BJ105KG	0805	1 µF	Ceramic
	LMK212BJ225MG	0805	2.2 µF	Ceramic
	EMK316BJ225KL	1206	2.2 µF	Ceramic
	LMK316BJ475KL	1206	4.7 µF	Ceramic
	JMK316BJ106KL	1206	10 µF	Ceramic
TDK	C2012X5R1C105M	0805	1 µF	Ceramic
	C2012X5R1A225M	0805	2.2 µF	Ceramic
	C2012X5R1A335M	0805	3.3 µF	Ceramic

表 9-3 contains a list of manufacturers of the recommended capacitors. Ceramic capacitors will provide the lowest output voltage ripple because they typically have the lowest ESR-rating.

表 9-3. Recommended Capacitor Manufacturers

CAPACITOR TYPE	MANUFACTURER	WEB ADDRESS
X5R / X7R ceramic	Taiyo Yuden	www.t-yuden.com
X5R / X7R ceramic	TDK	www.component.tdk.com
X5R / X7R ceramic	Vishay	www.vishay.com
X5R / X7R ceramic	Kemet	www.kemet.com

Copyright © 2020 Texas Instruments Incorporated

9.2.1.2.5 Power Dissipation

As given in セクション 7.4, the thermal resistance of TPS6040x is: $R_{\Theta JA}$ = 221°C/W.

The terminal resistance can be calculated using the following equation:

$$R_{\theta JA} = \frac{T_J - T_A}{P_D} \tag{7}$$

where:

T_J is the junction temperature. T_A is the ambient temperature. P_D is the power that is dissipated by the device.

$$R_{\theta JA} = \frac{T_J - T_A}{P_D} \tag{8}$$

The maximum power dissipation can be calculated using the following equation:

$$P_D = V_I \times I_I - V_O \times I_O = V_{I(max)} \times (I_O + I_{(SUPPLY)}) - V_O \times I_O \tag{9}$$

The maximum power dissipation happens with maximum input voltage and maximum output current.

At maximum load the supply current is 0.7 mA maximum.

$$P_D = 5\ V \times (60\ mA + 0.7\ mA) - 4.4\ V \times 60\ mA = 40\ mW \tag{10}$$

With this maximum rating and the thermal resistance of the device on the EVM, the maximum temperature rise above ambient temperature can be calculated using the following equation:

$$\Delta T_J = R_{\Theta JA} \times P_D = 221°C/W \times 40\ mW = 8.8°C \tag{11}$$

This means that the internal dissipation increases T_J by <10°C.

The junction temperature of the device shall not exceed 125°C.

This means the IC can easily be used at ambient temperatures up to:

$$T_A = T_{J(max)} - \Delta T_J = 125°C/W - 10°C = 115°C \tag{12}$$

9.2.1.3 Application Curves

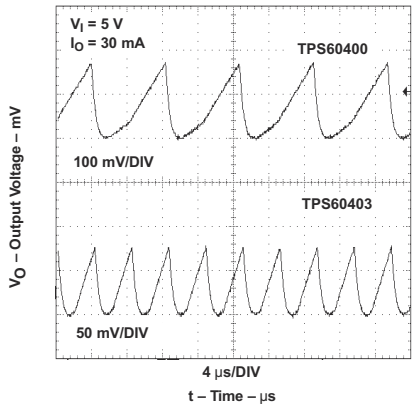

図 9-2. Output Voltage vs Time for TPS60400 and TPS60401

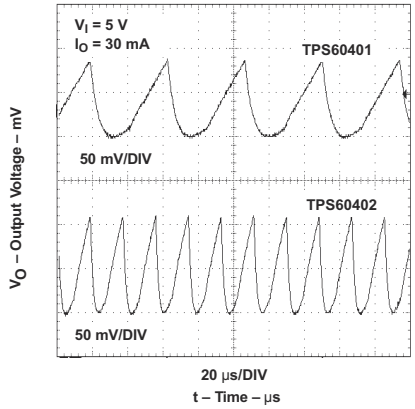

図 9-3. Output Voltage vs Time for TPS60401 and TPS60402

9.3 System Examples

To reduce the output voltage ripple, a RC post filter can be used.

An output filter can easily be formed with a resistor (R_P) and a capacitor (C_P). Cutoff frequency is given by:

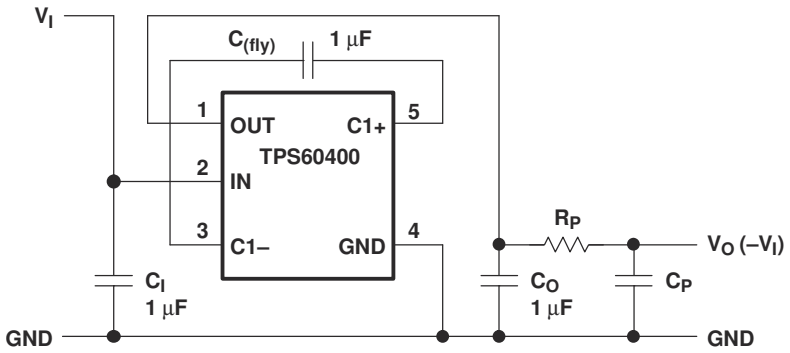

図 9-4. TPS60400 with RC-Post Filter

The equation refers only to the relation between output and input of the ac ripple voltages of the filter.

$$f_c = \frac{1}{2\pi R_P C_P} \quad (1)$$

and ratio V_O/V_{OUT} is:

$$\left|\frac{V_O}{V_{OUT}}\right| = \frac{1}{\sqrt{1 + \left(2\pi f R_P C_P\right)^2}} \quad (2)$$

with R_P = 50 Ω, C_P = 0.1 µF and f = 250 kHz: $\left|\frac{V_O}{V_{OUT}}\right| = 0.125$ (13)

To reduce the output voltage ripple, a LC post filter can be used.

図 9-5 shows a configuration with a LC-post filter to further reduce output ripple and noise.

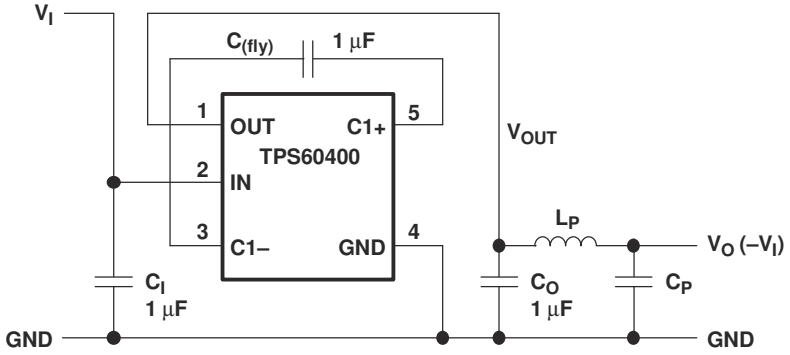

図 9-5. LC-Post Filter

The application allows to generate a voltage rail at a level of 1/2 of the input voltage.

A switched-capacitor voltage inverter can be configured as a high efficiency rail-splitter. This circuit provides a bipolar power supply that is useful in battery powered systems to supply dual-rail ICs, like operational amplifiers. Moreover, the SOT23-5 package and associated components require very little board space.

Copyright © 2020 Texas Instruments Incorporated

After power is applied, the flying capacitor ($C_{(fly)}$) connects alternately across the output capacitors C_3 and C_O. This equalizes the voltage on those capacitors and draws current from V_I to V_O as required to maintain the output at 1/2 V_I.

The maximum input voltage between V_I and GND in the schematic (or between IN and OUT at the device itself) must not exceed 6.5 V.

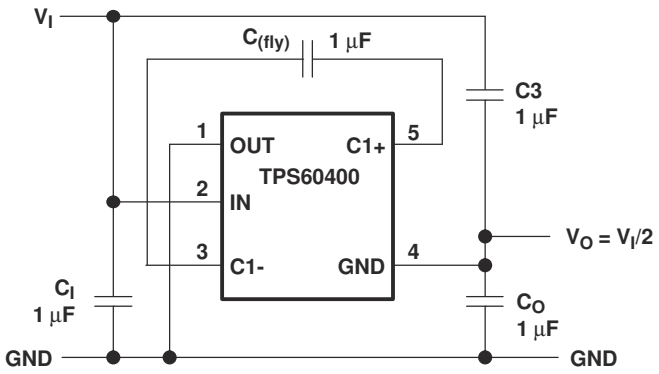

図 9-6. TPS60400 as a High-Efficiency Rail Splitter

The application allows to generate a voltage rail at a level of -Vi as well as 2 x Vi (V(pos)).

In the circuit of 図 9-7, capacitors C_I, $C_{(fly)}$, and C_O form the inverter, while C1 and C2 form the doubler. C1 and $C_{(fly)}$ are the flying capacitors; C_O and C2 are the output capacitors. Because both the inverter and doubler use part of the charge-pump circuit, loading either output causes both outputs to decline toward GND. Make sure the sum of the currents drawn from the two outputs does not exceed 60 mA. The maximum output current at $V_{(pos)}$ must not exceed 30 mA. If the negative output is loaded, this current must be further reduced.

$$I_I \approx -I_O + 2 \times I_{O(POS)}$$

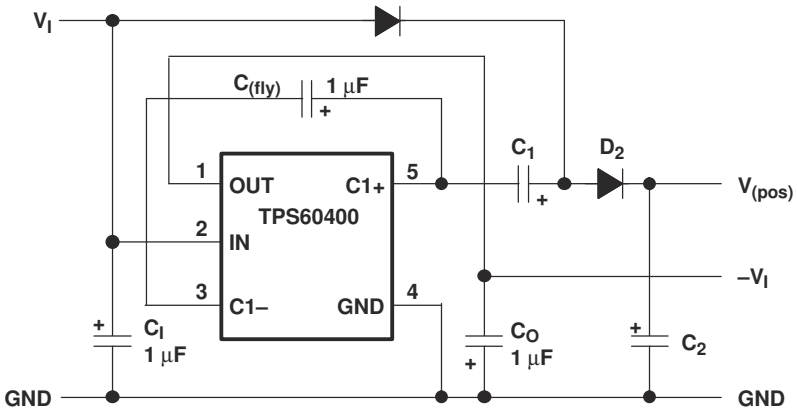

図 9-7. TPS60400 as Doubler/Inverter

The application generate a voltage rail at a level -2 x Vi.

Two devices can be cascaded to produce an even larger negative voltage (see 図 9-8). The unloaded output voltage is normally -2 × V_I, but this is reduced slightly by the output resistance of the first device multiplied by the quiescent current of the second. When cascading more than two devices, the output resistance rises dramatically.

Copyright © 2020 Texas Instruments Incorporated

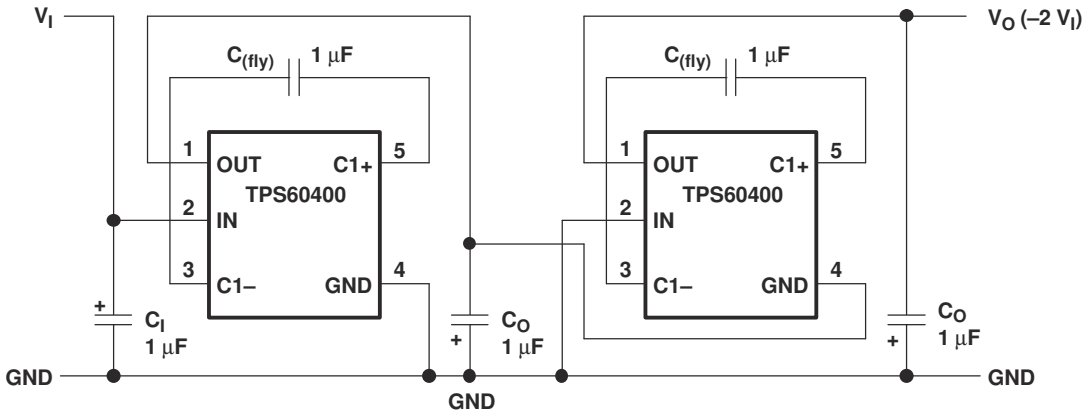

図 9-8. Doubling Inverter

The application allows to increase the output current by using two or more in parallel.

Paralleling multiple TPS6040xs reduces the output resistance. Each device requires its own flying capacitor ($C_{(fly)}$), but the output capacitor (C_O) serves all devices (see 図 9-9). Increase C_O's value by a factor of n, where n is the number of parallel devices. Equation 1 shows the equation for calculating output resistance.

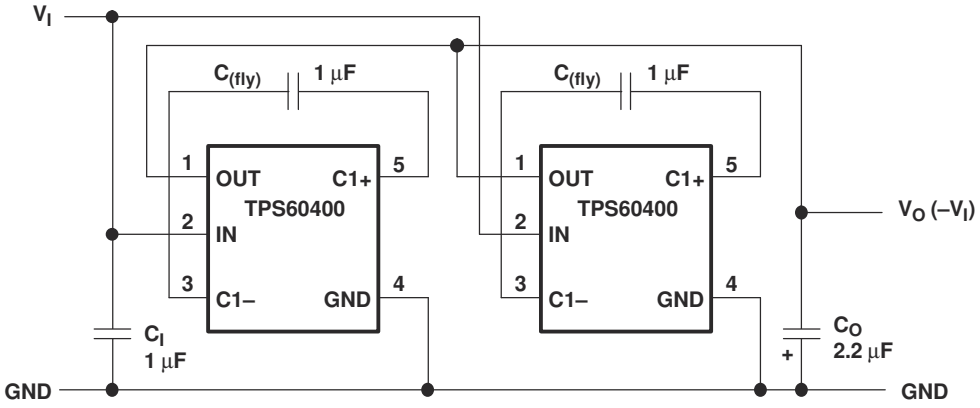

図 9-9. Paralleling Devices

The application adds a shutdown function.

If shutdown is necessary, use the circuit in 図 9-10. The output resistance of the TPS6040x typically is 15 Ω plus two times the output resistance of the buffer.

Connecting multiple buffers in parallel reduces the output resistance of the buffer driving the IN pin.

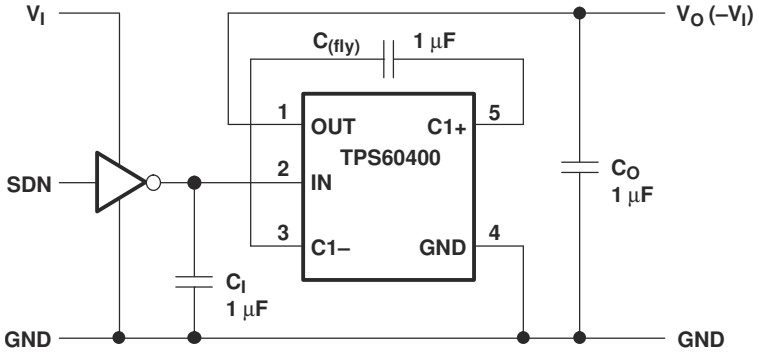

図 9-10. Shutdown Control

The application generates a regulated output voltage for a GaAs bias supply.

Copyright © 2020 Texas Instruments Incorporated

A solution for a -2.7-V/3-mA GaAs bias supply is proposed in 図 9-11. The input voltage of 3.3 V is first inverted with a TPS60403 and stabilized using a TLV431 low-voltage shunt regulator. Resistor R_P with capacitor C_P is used for filtering the output voltage.

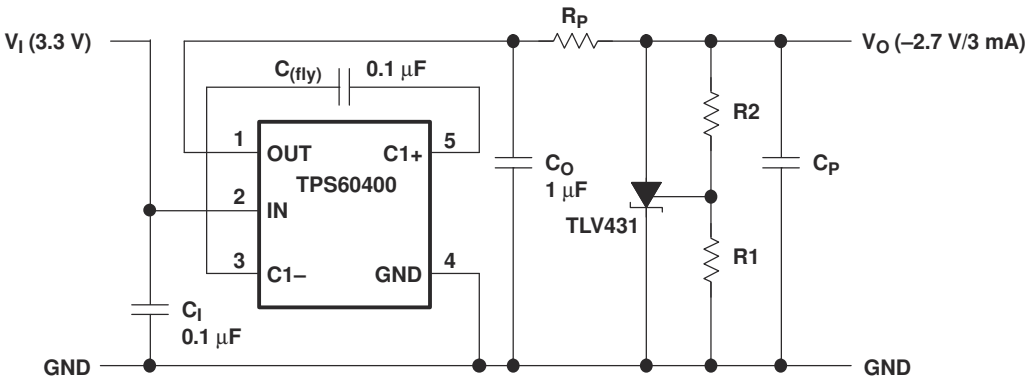

図 9-11. GaAs Supply

A 0.1-µF capacitor was selected for $C_{(fly)}$. By this, the output resistance of the inverter is about 52 Ω.

R_{PMAX} can be calculated using the following equation:

$$V_O = -\left(1 + \frac{R1}{R2}\right) \times V_{ref} - R1 \times I_{I(ref)} \tag{14}$$

A 100-Ω resistor was selected for R_P.

The reference voltage across R2 is 1.24 V typical. With 5-µA current for the voltage divider, R2 gets:

$$R_{PMAX} = \left(\frac{V_{CO} - V_O}{I_O} - R_O\right)$$

With: V_{CO} = –3.3 V; V_O = –2.7 V; I_O = –3 mA

R_{PMAX} = 200 Ω – 52 Ω = 148 Ω (15)

With C_P = 1 µF the ratio V_O/V_I of the RC post filter is:

$$R2 = \frac{1.24\ V}{5\ \mu A} \approx 250\ k\Omega$$

$$R1 = \frac{2.7 - 1.24\ V}{5\ \mu A} \approx 300\ k\Omega \tag{16}$$

$$\left|\frac{V_O}{V_I}\right| = \frac{1}{\sqrt{1 + (2\pi 125000Hz \times 100\Omega \times 1\ \mu F)^2}} \approx 0.01 \tag{17}$$

The application generates an output voltage of 1/2 of the input voltage.

By exchanging GND with OUT (connecting the GND pin with OUT and the OUT pin with GND), a step-down charge pump can easily be formed. In the first cycle S1 and S3 are closed, and $C_{(fly)}$ with C_O in series are charged. Assuming the same capacitance, the voltage across $C_{(fly)}$ and C_O is split equally between the capacitors. In the second cycle, S2 and S4 close and both capacitors with $V_I/2$ across are connected in parallel.

Copyright © 2020 Texas Instruments Incorporated

The maximum input voltage between V_I and GND in the schematic (or between IN and OUT at the device itself) must not exceed 6.5 V. For input voltages in the range of 6.5 V to 11 V, an additional Zener-diode is recommended (see 図 9-14).

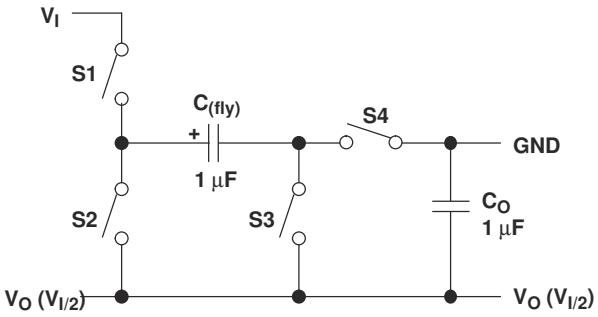

図 9-12. Step-Down Principle

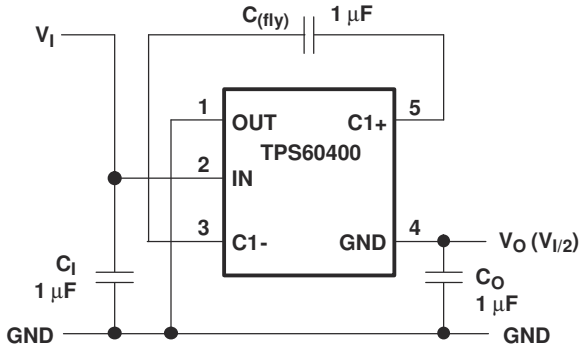

図 9-13. Step-Down Charge Pump Connection

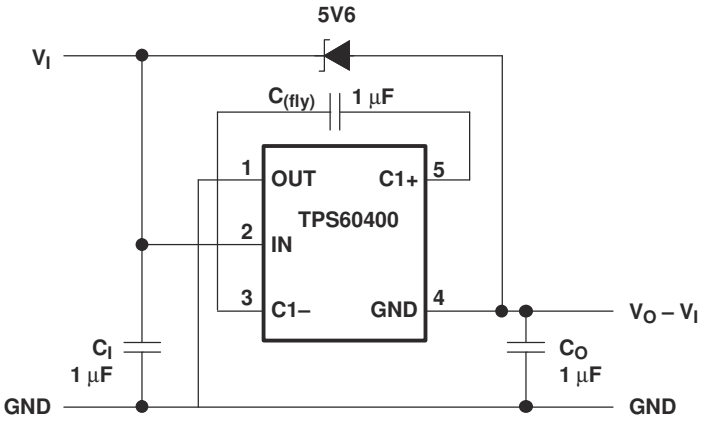

図 9-14. Step-Down Charge Pump Connection for Higher Input Voltages

10 Power Supply Recommendations

The TPS60400 device family has no special requirements for its power supply. The power supply output needs to be rated according to the supply voltage, output voltage and output current of the TPS6040x.

Copyright © 2020 Texas Instruments Incorporated

11 Layout

11.1 Layout Guidelines

All capacitors should be soldered as close as possible to the IC. A PCB layout proposal for a single-layer board is shown in 図 11-1. Care has been taken to connect all capacitors as close as possible to the circuit to achieve optimized output voltage ripple performance.

11.2 Layout Example

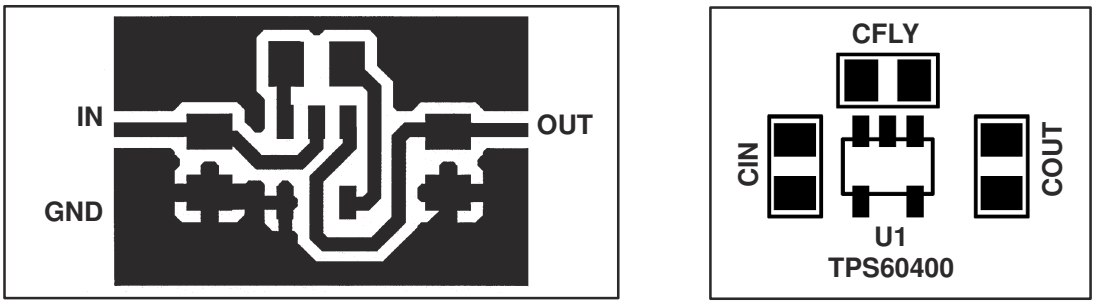

図 11-1. Recommended PCB Layout for TPS6040x (Top Layer)

12 Device and Documentation Support

12.1 Device Support

12.1.1 Third-Party Products Disclaimer

TI'S PUBLICATION OF INFORMATION REGARDING THIRD-PARTY PRODUCTS OR SERVICES DOES NOT CONSTITUTE AN ENDORSEMENT REGARDING THE SUITABILITY OF SUCH PRODUCTS OR SERVICES OR A WARRANTY, REPRESENTATION OR ENDORSEMENT OF SUCH PRODUCTS OR SERVICES, EITHER ALONE OR IN COMBINATION WITH ANY TI PRODUCT OR SERVICE.

12.1.2 Device Family Products

Other inverting DC-DC converters from Texas Instruments are listed in 表 12-1.

表 12-1. Product Identification

PART NUMBER	DESCRIPTION
TPS6735	Fixed negative 5-V, 200-mA inverting dc-dc converter
TPS6755	Adjustable 1-W inverting dc-dc converter

12.2 Related Links

The table below lists quick access links. Categories include technical documents, support and community resources, tools and software, and quick access to sample or buy.

表 12-2. Related Links

PARTS	PRODUCT FOLDER	SAMPLE & BUY	TECHNICAL DOCUMENTS	TOOLS & SOFTWARE	SUPPORT & COMMUNITY
TPS60400	Click here	Click here	Click here	Click here	Click here
TPS60401	Click here	Click here	Click here	Click here	Click here
TPS60402	Click here	Click here	Click here	Click here	Click here
TPS60403	Click here	Click here	Click here	Click here	Click here

12.3 Trademarks

すべての商標は、それぞれの所有者に帰属します。

12.4 Electrostatic Discharge Caution



This integrated circuit can be damaged by ESD. Texas Instruments recommends that all integrated circuits be handled with appropriate precautions. Failure to observe proper handling and installation procedures can cause damage.

ESD damage can range from subtle performance degradation to complete device failure. Precision integrated circuits may be more susceptible to damage because very small parametric changes could cause the device not to meet its published specifications.

12.5 Glossary

TI Glossary This glossary lists and explains terms, acronyms, and definitions.

13 Mechanical, Packaging, and Orderable Information

The following pages include mechanical, packaging, and orderable information. This information is the most current data available for the designated devices. This data is subject to change without notice and revision of this document. For browser-based versions of this data sheet, refer to the left-hand navigation.

Copyright © 2020 Texas Instruments Incorporated

PACKAGING INFORMATION

Orderable part number	Status (1)	Material type (2)	Package | Pins	Package qty | Carrier	RoHS (3)	Lead finish/ Ball material (4)	MSL rating/ Peak reflow (5)	Op temp (°C)	Part marking (6)
TPS60400DBVR	Active	Production	SOT-23 (DBV) | 5	3000 | LARGE T&R	Yes	Call TI | Sn	Level-1-260C-UNLIM	-40 to 85	PFKI
TPS60400DBVR.A	Active	Production	SOT-23 (DBV) | 5	3000 | LARGE T&R	Yes	SN	Level-1-260C-UNLIM	-40 to 125	PFKI
TPS60400DBVR.B	Active	Production	SOT-23 (DBV) | 5	3000 | LARGE T&R	Yes	SN	Level-1-260C-UNLIM	-40 to 125	PFKI
TPS60400DBVRG4	Active	Production	SOT-23 (DBV) | 5	3000 | LARGE T&R	Yes	NIPDAU	Level-1-260C-UNLIM	-40 to 85	PFKI
TPS60400DBVRG4.B	Active	Production	SOT-23 (DBV) | 5	3000 | LARGE T&R	Yes	NIPDAU	Level-1-260C-UNLIM	-40 to 125	PFKI
TPS60400DBVT	Active	Production	SOT-23 (DBV) | 5	250 | SMALL T&R	Yes	NIPDAU | SN	Level-1-260C-UNLIM	-40 to 85	PFKI
TPS60400DBVT.B	Active	Production	SOT-23 (DBV) | 5	250 | SMALL T&R	Yes	SN	Level-1-260C-UNLIM	-40 to 125	PFKI
TPS60400DBVTG4	Active	Production	SOT-23 (DBV) | 5	250 | SMALL T&R	Yes	NIPDAU	Level-1-260C-UNLIM	-40 to 85	PFKI
TPS60400DBVTG4.B	Active	Production	SOT-23 (DBV) | 5	250 | SMALL T&R	Yes	NIPDAU	Level-1-260C-UNLIM	-40 to 125	PFKI
TPS60401DBVR	Active	Production	SOT-23 (DBV) | 5	3000 | LARGE T&R	Yes	Call TI | Sn	Level-1-260C-UNLIM	-40 to 85	PFLI
TPS60401DBVR.A	Active	Production	SOT-23 (DBV) | 5	3000 | LARGE T&R	Yes	SN	Level-1-260C-UNLIM	-40 to 125	PFLI
TPS60401DBVR.B	Active	Production	SOT-23 (DBV) | 5	3000 | LARGE T&R	Yes	SN	Level-1-260C-UNLIM	-40 to 125	PFLI
TPS60401DBVRG4	Active	Production	SOT-23 (DBV) | 5	3000 | LARGE T&R	Yes	NIPDAU	Level-1-260C-UNLIM	-40 to 85	PFLI
TPS60401DBVRG4.B	Active	Production	SOT-23 (DBV) | 5	3000 | LARGE T&R	Yes	NIPDAU	Level-1-260C-UNLIM	-40 to 125	PFLI
TPS60401DBVT	Active	Production	SOT-23 (DBV) | 5	250 | SMALL T&R	Yes	NIPDAU | SN	Level-1-260C-UNLIM	-40 to 85	PFLI
TPS60401DBVT.B	Active	Production	SOT-23 (DBV) | 5	250 | SMALL T&R	Yes	SN	Level-1-260C-UNLIM	-40 to 125	PFLI
TPS60401DBVTG4	Active	Production	SOT-23 (DBV) | 5	250 | SMALL T&R	Yes	NIPDAU	Level-1-260C-UNLIM	-40 to 85	PFLI
TPS60401DBVTG4.B	Active	Production	SOT-23 (DBV) | 5	250 | SMALL T&R	Yes	NIPDAU	Level-1-260C-UNLIM	-40 to 125	PFLI
TPS60402DBVR	Active	Production	SOT-23 (DBV) | 5	3000 | LARGE T&R	Yes	Call TI | Sn	Level-1-260C-UNLIM	-40 to 85	PFMI
TPS60402DBVR.A	Active	Production	SOT-23 (DBV) | 5	3000 | LARGE T&R	Yes	SN	Level-1-260C-UNLIM	-40 to 125	PFMI
TPS60402DBVR.B	Active	Production	SOT-23 (DBV) | 5	3000 | LARGE T&R	Yes	SN	Level-1-260C-UNLIM	-40 to 125	PFMI
TPS60402DBVRG4	Active	Production	SOT-23 (DBV) | 5	3000 | LARGE T&R	Yes	NIPDAU	Level-1-260C-UNLIM	-40 to 85	PFMI
TPS60402DBVRG4.B	Active	Production	SOT-23 (DBV) | 5	3000 | LARGE T&R	Yes	NIPDAU	Level-1-260C-UNLIM	-40 to 125	PFMI
TPS60402DBVT	Active	Production	SOT-23 (DBV) | 5	250 | SMALL T&R	Yes	NIPDAU | SN	Level-1-260C-UNLIM	-40 to 85	PFMI
TPS60402DBVT.B	Active	Production	SOT-23 (DBV) | 5	250 | SMALL T&R	Yes	SN	Level-1-260C-UNLIM	-40 to 125	PFMI
TPS60402DBVTG4	Active	Production	SOT-23 (DBV) | 5	250 | SMALL T&R	Yes	NIPDAU	Level-1-260C-UNLIM	-40 to 85	PFMI
TPS60402DBVTG4.B	Active	Production	SOT-23 (DBV) | 5	250 | SMALL T&R	Yes	NIPDAU	Level-1-260C-UNLIM	-40 to 125	PFMI
TPS60403DBVR	Active	Production	SOT-23 (DBV) | 5	3000 | LARGE T&R	Yes	Call TI | Sn	Level-1-260C-UNLIM	-40 to 85	PFNI
TPS60403DBVR.A	Active	Production	SOT-23 (DBV) | 5	3000 | LARGE T&R	Yes	SN	Level-1-260C-UNLIM	-40 to 125	PFNI

Orderable part number	Status (1)	Material type (2)	Package | Pins	Package qty | Carrier	RoHS (3)	Lead finish/ Ball material (4)	MSL rating/ Peak reflow (5)	Op temp (°C)	Part marking (6)
TPS60403DBVR.B	Active	Production	SOT-23 (DBV) | 5	3000 | LARGE T&R	Yes	SN	Level-1-260C-UNLIM	-40 to 125	PFNI
TPS60403DBVRG4	Active	Production	SOT-23 (DBV) | 5	3000 | LARGE T&R	Yes	NIPDAU	Level-1-260C-UNLIM	-40 to 85	PFNI
TPS60403DBVRG4.B	Active	Production	SOT-23 (DBV) | 5	3000 | LARGE T&R	Yes	NIPDAU	Level-1-260C-UNLIM	-40 to 125	PFNI
TPS60403DBVT	Active	Production	SOT-23 (DBV) | 5	250 | SMALL T&R	Yes	NIPDAU | SN	Level-1-260C-UNLIM	-40 to 85	PFNI
TPS60403DBVT.B	Active	Production	SOT-23 (DBV) | 5	250 | SMALL T&R	Yes	SN	Level-1-260C-UNLIM	-40 to 125	PFNI
TPS60403DBVTG4	Active	Production	SOT-23 (DBV) | 5	250 | SMALL T&R	Yes	NIPDAU	Level-1-260C-UNLIM	-40 to 85	PFNI
TPS60403DBVTG4.B	Active	Production	SOT-23 (DBV) | 5	250 | SMALL T&R	Yes	NIPDAU	Level-1-260C-UNLIM	-40 to 125	PFNI

(1) **Status:** For more details on status, see our product life cycle.

(2) **Material type:** When designated, preproduction parts are prototypes/experimental devices, and are not yet approved or released for full production. Testing and final process, including without limitation quality assurance, reliability performance testing, and/or process qualification, may not yet be complete, and this item is subject to further changes or possible discontinuation. If available for ordering, purchases will be subject to an additional waiver at checkout, and are intended for early internal evaluation purposes only. These items are sold without warranties of any kind.

(3) **RoHS values:** Yes, No, RoHS Exempt. See the TI RoHS Statement for additional information and value definition.

(4) **Lead finish/Ball material:** Parts may have multiple material finish options. Finish options are separated by a vertical ruled line. Lead finish/Ball material values may wrap to two lines if the finish value exceeds the maximum column width.

(5) **MSL rating/Peak reflow:** The moisture sensitivity level ratings and peak solder (reflow) temperatures. In the event that a part has multiple moisture sensitivity ratings, only the lowest level per JEDEC standards is shown. Refer to the shipping label for the actual reflow temperature that will be used to mount the part to the printed circuit board.

(6) **Part marking:** There may be an additional marking, which relates to the logo, the lot trace code information, or the environmental category of the part.

Multiple part markings will be inside parentheses. Only one part marking contained in parentheses and separated by a "~" will appear on a part. If a line is indented then it is a continuation of the previous line and the two combined represent the entire part marking for that device.

Important Information and Disclaimer: The information provided on this page represents TI's knowledge and belief as of the date that it is provided. TI bases its knowledge and belief on information provided by third parties, and makes no representation or warranty as to the accuracy of such information. Efforts are underway to better integrate information from third parties. TI has taken and continues to take reasonable steps to provide representative and accurate information but may not have conducted destructive testing or chemical analysis on incoming materials and chemicals. TI and TI suppliers consider certain information to be proprietary, and thus CAS numbers and other limited information may not be available for release.

In no event shall TI's liability arising out of such information exceed the total purchase price of the TI part(s) at issue in this document sold by TI to Customer on an annual basis.

OTHER QUALIFIED VERSIONS OF TPS60400, TPS60401, TPS60402, TPS60403 :

- Automotive : TPS60400-Q1, TPS60401-Q1, TPS60402-Q1, TPS60403-Q1

NOTE: Qualified Version Definitions:

- Automotive - Q100 devices qualified for high-reliability automotive applications targeting zero defects

TAPE AND REEL INFORMATION

REEL DIMENSIONS

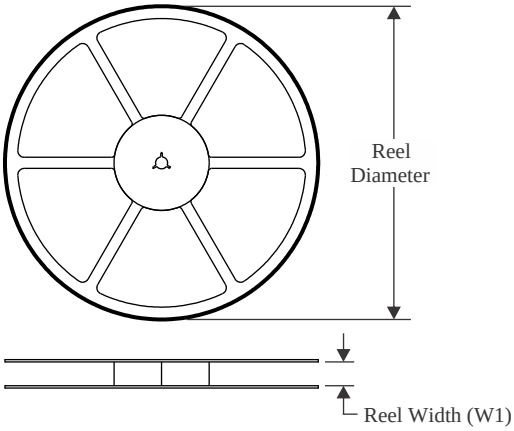

TAPE DIMENSIONS

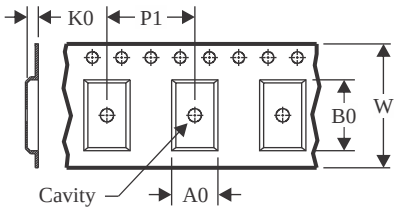

A0	Dimension designed to accommodate the component width
B0	Dimension designed to accommodate the component length
K0	Dimension designed to accommodate the component thickness
W	Overall width of the carrier tape
P1	Pitch between successive cavity centers

QUADRANT ASSIGNMENTS FOR PIN 1 ORIENTATION IN TAPE

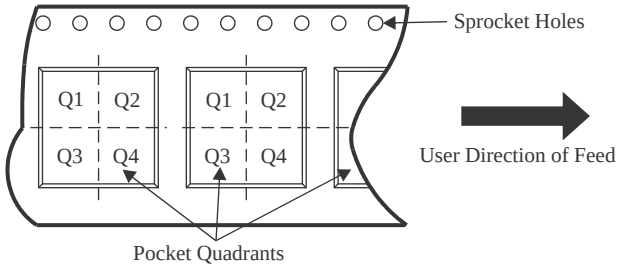

*All dimensions are nominal

Device	Package Type	Package Drawing	Pins	SPQ	Reel Diameter (mm)	Reel Width W1 (mm)	A0 (mm)	B0 (mm)	K0 (mm)	P1 (mm)	W (mm)	Pin1 Quadrant
TPS60400DBVR	SOT-23	DBV	5	3000	180.0	8.4	3.2	3.2	1.4	4.0	8.0	Q3
TPS60400DBVR	SOT-23	DBV	5	3000	180.0	8.4	3.2	3.2	1.4	4.0	8.0	Q3
TPS60400DBVR	SOT-23	DBV	5	3000	178.0	9.0	3.23	3.17	1.37	4.0	8.0	Q3
TPS60400DBVRG4	SOT-23	DBV	5	3000	178.0	9.0	3.23	3.17	1.37	4.0	8.0	Q3
TPS60400DBVT	SOT-23	DBV	5	250	180.0	8.4	3.2	3.2	1.4	4.0	8.0	Q3
TPS60400DBVTG4	SOT-23	DBV	5	250	178.0	9.0	3.23	3.17	1.37	4.0	8.0	Q3
TPS60401DBVR	SOT-23	DBV	5	3000	178.0	9.0	3.3	3.2	1.4	4.0	8.0	Q3
TPS60401DBVR	SOT-23	DBV	5	3000	180.0	8.4	3.2	3.2	1.4	4.0	8.0	Q3
TPS60401DBVR	SOT-23	DBV	5	3000	180.0	8.4	3.2	3.2	1.4	4.0	8.0	Q3
TPS60401DBVRG4	SOT-23	DBV	5	3000	178.0	9.0	3.3	3.2	1.4	4.0	8.0	Q3
TPS60401DBVT	SOT-23	DBV	5	250	180.0	8.4	3.2	3.2	1.4	4.0	8.0	Q3
TPS60401DBVTG4	SOT-23	DBV	5	250	178.0	9.0	3.23	3.17	1.37	4.0	8.0	Q3
TPS60402DBVR	SOT-23	DBV	5	3000	180.0	8.4	3.2	3.2	1.4	4.0	8.0	Q3
TPS60402DBVR	SOT-23	DBV	5	3000	178.0	9.0	3.3	3.2	1.4	4.0	8.0	Q3
TPS60402DBVR	SOT-23	DBV	5	3000	180.0	8.4	3.2	3.2	1.4	4.0	8.0	Q3
TPS60402DBVRG4	SOT-23	DBV	5	3000	178.0	9.0	3.3	3.2	1.4	4.0	8.0	Q3

Device	Package Type	Package Drawing	Pins	SPQ	Reel Diameter (mm)	Reel Width W1 (mm)	A0 (mm)	B0 (mm)	K0 (mm)	P1 (mm)	W (mm)	Pin1 Quadrant
TPS60402DBVT	SOT-23	DBV	5	250	180.0	8.4	3.2	3.2	1.4	4.0	8.0	Q3
TPS60402DBVTG4	SOT-23	DBV	5	250	178.0	9.0	3.23	3.17	1.37	4.0	8.0	Q3
TPS60403DBVR	SOT-23	DBV	5	3000	178.0	9.0	3.23	3.17	1.37	4.0	8.0	Q3
TPS60403DBVR	SOT-23	DBV	5	3000	180.0	8.4	3.2	3.2	1.4	4.0	8.0	Q3
TPS60403DBVR	SOT-23	DBV	5	3000	180.0	8.4	3.2	3.2	1.4	4.0	8.0	Q3
TPS60403DBVRG4	SOT-23	DBV	5	3000	178.0	9.0	3.23	3.17	1.37	4.0	8.0	Q3
TPS60403DBVT	SOT-23	DBV	5	250	178.0	9.0	3.23	3.17	1.37	4.0	8.0	Q3
TPS60403DBVT	SOT-23	DBV	5	250	180.0	8.4	3.2	3.2	1.4	4.0	8.0	Q3
TPS60403DBVTG4	SOT-23	DBV	5	250	178.0	9.0	3.23	3.17	1.37	4.0	8.0	Q3

TAPE AND REEL BOX DIMENSIONS

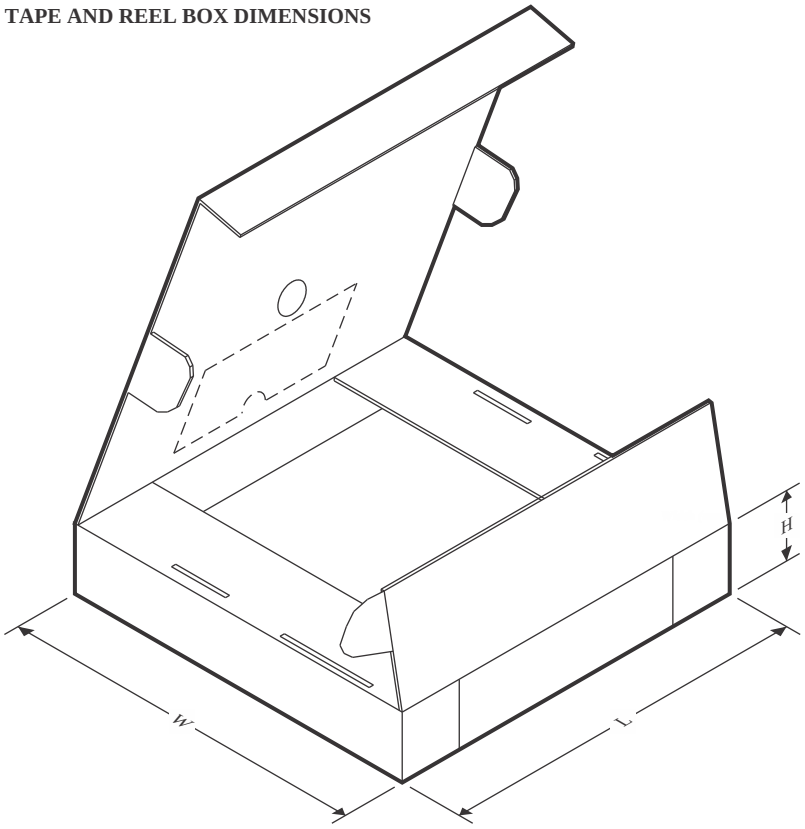

*All dimensions are nominal

Device	Package Type	Package Drawing	Pins	SPQ	Length (mm)	Width (mm)	Height (mm)
TPS60400DBVR	SOT-23	DBV	5	3000	210.0	185.0	35.0
TPS60400DBVR	SOT-23	DBV	5	3000	210.0	185.0	35.0
TPS60400DBVR	SOT-23	DBV	5	3000	180.0	180.0	18.0
TPS60400DBVRG4	SOT-23	DBV	5	3000	180.0	180.0	18.0
TPS60400DBVT	SOT-23	DBV	5	250	210.0	185.0	35.0
TPS60400DBVTG4	SOT-23	DBV	5	250	180.0	180.0	18.0
TPS60401DBVR	SOT-23	DBV	5	3000	180.0	180.0	18.0
TPS60401DBVR	SOT-23	DBV	5	3000	210.0	185.0	35.0
TPS60401DBVR	SOT-23	DBV	5	3000	210.0	185.0	35.0
TPS60401DBVRG4	SOT-23	DBV	5	3000	180.0	180.0	18.0
TPS60401DBVT	SOT-23	DBV	5	250	210.0	185.0	35.0
TPS60401DBVTG4	SOT-23	DBV	5	250	180.0	180.0	18.0
TPS60402DBVR	SOT-23	DBV	5	3000	210.0	185.0	35.0
TPS60402DBVR	SOT-23	DBV	5	3000	180.0	180.0	18.0
TPS60402DBVR	SOT-23	DBV	5	3000	210.0	185.0	35.0
TPS60402DBVRG4	SOT-23	DBV	5	3000	180.0	180.0	18.0
TPS60402DBVT	SOT-23	DBV	5	250	210.0	185.0	35.0
TPS60402DBVTG4	SOT-23	DBV	5	250	180.0	180.0	18.0

Device	Package Type	Package Drawing	Pins	SPQ	Length (mm)	Width (mm)	Height (mm)
TPS60403DBVR	SOT-23	DBV	5	3000	180.0	180.0	18.0
TPS60403DBVR	SOT-23	DBV	5	3000	210.0	185.0	35.0
TPS60403DBVR	SOT-23	DBV	5	3000	210.0	185.0	35.0
TPS60403DBVRG4	SOT-23	DBV	5	3000	180.0	180.0	18.0
TPS60403DBVT	SOT-23	DBV	5	250	180.0	180.0	18.0
TPS60403DBVT	SOT-23	DBV	5	250	210.0	185.0	35.0
TPS60403DBVTG4	SOT-23	DBV	5	250	180.0	180.0	18.0

PACKAGE OUTLINE

DBV0005A

SOT-23 - 1.45 mm max height

SMALL OUTLINE TRANSISTOR

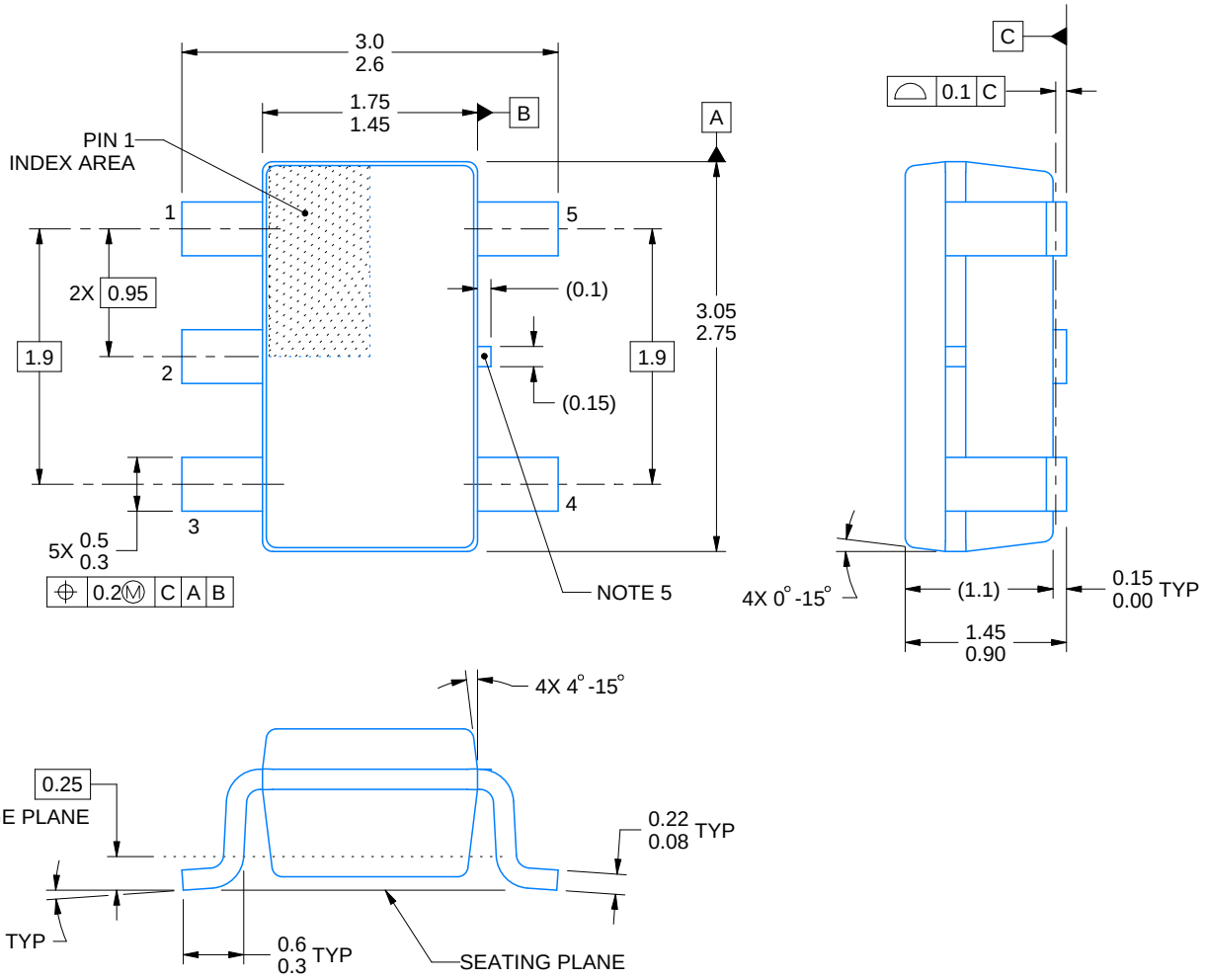

4214839/K 08/2024

NOTES:

1. All linear dimensions are in millimeters. Any dimensions in parenthesis are for reference only. Dimensioning and tolerancing per ASME Y14.5M.
2. This drawing is subject to change without notice.
3. Refernce JEDEC MO-178.
4. Body dimensions do not include mold flash, protrusions, or gate burrs. Mold flash, protrusions, or gate burrs shall not exceed 0.25 mm per side.
5. Support pin may differ or may not be present.

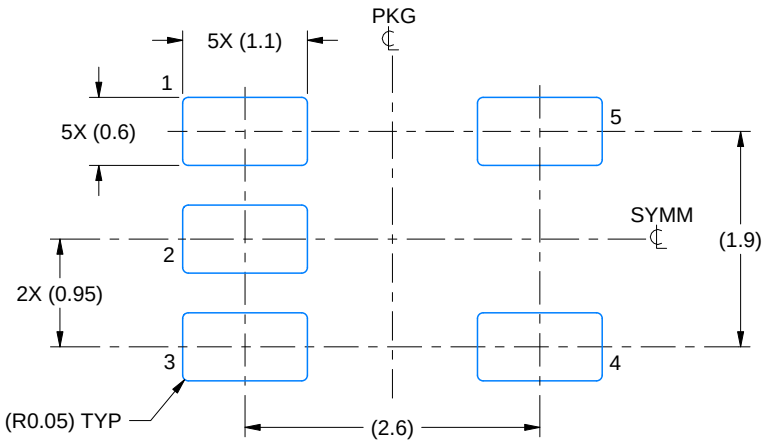

LAND PATTERN EXAMPLE
EXPOSED METAL SHOWN
SCALE:15X

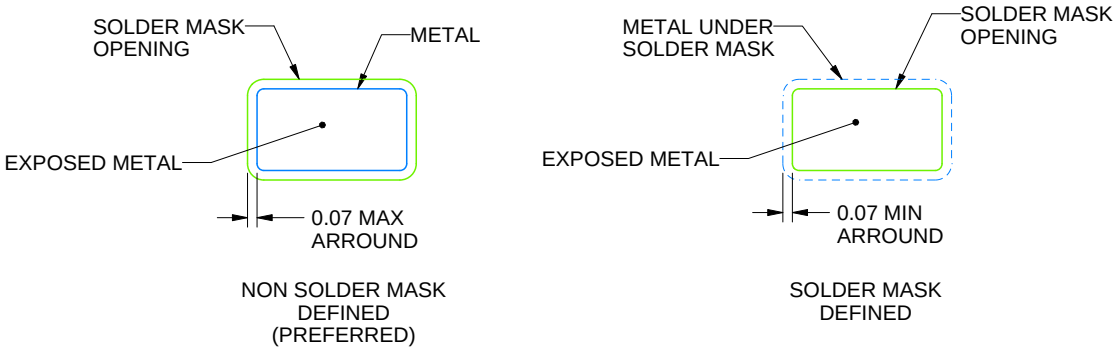

SOLDER MASK DETAILS

4214839/K 08/2024

NOTES: (continued)

6. Publication IPC-7351 may have alternate designs.
7. Solder mask tolerances between and around signal pads can vary based on board fabrication site.

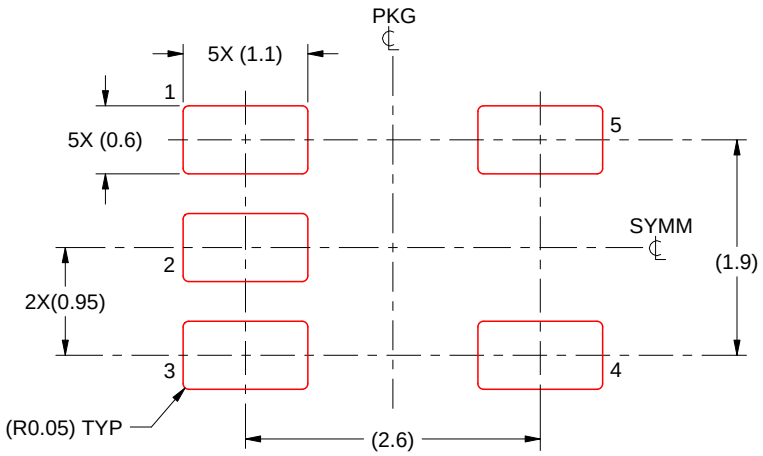

SOLDER PASTE EXAMPLE
BASED ON 0.125 mm THICK STENCIL
SCALE:15X

4214839/K 08/2024

NOTES: (continued)

8. Laser cutting apertures with trapezoidal walls and rounded corners may offer better paste release. IPC-7525 may have alternate design recommendations.
9. Board assembly site may have different recommendations for stencil design.

重要なお知らせと免責事項

TI は、技術データと信頼性データ (データシートを含みます)、設計リソース (リファレンス デザインを含みます)、アプリケーションや設計に関する各種アドバイス、Web ツール、安全性情報、その他のリソースを、欠陥が存在する可能性のある「現状のまま」提供しており、商品性および特定目的に対する適合性の黙示保証、第三者の知的財産権の非侵害保証を含むいかなる保証も、明示的または黙示的にかかわらず拒否します。

これらのリソースは、TI 製品を使用する設計の経験を積んだ開発者への提供を意図したものです。(1) お客様のアプリケーションに適した TI 製品の選定、(2) お客様のアプリケーションの設計、検証、試験、(3) お客様のアプリケーションに該当する各種規格や、その他のあらゆる安全性、セキュリティ、規制、または他の要件への確実な適合に関する責任を、お客様のみが単独で負うものとします。

上記の各種リソースは、予告なく変更される可能性があります。これらのリソースは、リソースで説明されている TI 製品を使用するアプリケーションの開発の目的でのみ、TI はその使用をお客様に許諾します。これらのリソースに関して、他の目的で複製することや掲載することは禁止されています。TI や第三者の知的財産権のライセンスが付与されている訳ではありません。お客様は、これらのリソースを自身で使用した結果発生するあらゆる申し立て、損害、費用、損失、責任について、TI およびその代理人を完全に補償するものとし、TI は一切の責任を拒否します。

TI の製品は、 TI の販売条件 、 TI の総合的な品質ガイドライン 、 ti.com または TI 製品などに関連して提供される他の適用条件に従い提供されます。TI がこれらのリソースを提供することは、適用される TI の保証または他の保証の放棄の拡大や変更を意味するものではありません。 TI がカスタム、またはカスタマー仕様として明示的に指定していない限り、TI の製品は標準的なカタログに掲載される汎用機器です。

お客様がいかなる追加条項または代替条項を提案する場合も、TI はそれらに異議を唱え、拒否します。

Copyright © 2026, Texas Instruments Incorporated

最終更新日：2025 年 10 月