TPS92624-Q1 4 チャネル、車載用ハイサイド LED ドライバ、熱均衡制御機能付き

1 特長

- 車載アプリケーション用に AEC-Q100 認定済み:
  - 温度グレード 1:–40℃～125℃、T_A
- 広い入力電圧範囲:4.5V～40V
- 外部シャント抵抗による熱均衡
- フォルト・モード時の電源電流が小さい
- 4 つの高精度電流レギュレーション:
  - チャネルあたり最大 150mA の電流出力
  - 全温度範囲にわたって ±5% の精度
  - 抵抗による独立した電流設定
  - 輝度制御用の独立した PWM ピン
- 低いドロップアウト電圧:
  - 最大ドロップアウト:600mV (150mA の場合)
- 診断および保護機能
  - LED の開路検出と自動回復
  - LED のグランドへの短絡検出と自動回復
  - スレッショルドを調整可能な診断機能
  - 1 つの障害で全体を障害とする方式と、障害の発生したチャネルのみをオフにする方式 (N-1) のどちらかに構成可能なフォルト・バス
  - サーマル・シャットダウン
- 動作時の接合部温度範囲:–40℃～150℃

2 アプリケーション

- 車載用外部テール・ライト:リア・ランプ、センター・ハイマウント・ストップ・ランプ、サイド・マーカー
- 車載用外部小型ライト:ドア・ハンドル、ブラインド・スポット検出インジケータ、充電口
- 車内照明:オーバーヘッド・コンソール、マップ・ランプ
- 汎用 LED ドライバ・アプリケーション

3 概要

TPS92624-Q1 4 チャネル LED ドライバは、デバイスの温度上昇を抑えるための独自の熱管理設計を採用しています。TPS92624-Q1 は、チャネルあたり最大 150mA の全負荷電流を出力するために、電圧変動が大きい自動車のバッテリから直接給電するリニア・ドライバです。外付けシャント抵抗を利用して出力電流を分配し、ドライバの外で電力を消費します。本デバイスの豊富な診断機能には、LED 開放、LED グランド短絡、デバイス過熱保護が含まれます。

どれか 1 つに障害が発生すれば全体を障害とする TPS92624-Q1 の機能は、TPS9261x-Q1、TPS9262x-Q1、TPS92630/8-Q1、TPS92830-Q1 といった他の LED ドライバとの連係が可能であるため、さまざまな要求に対応できます。

表 3-1. 製品情報

部品番号	パッケージ(1)	本体サイズ (公称)
TPS92624-Q1	HTSSOP (20)	4.40mm × 6.50mm

(1) 利用可能なパッケージについては、このデータシートの末尾にある注文情報を参照してください。

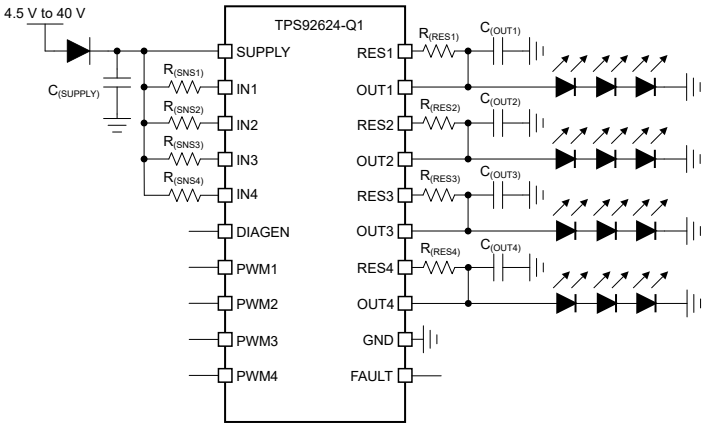

代表的なアプリケーションの図

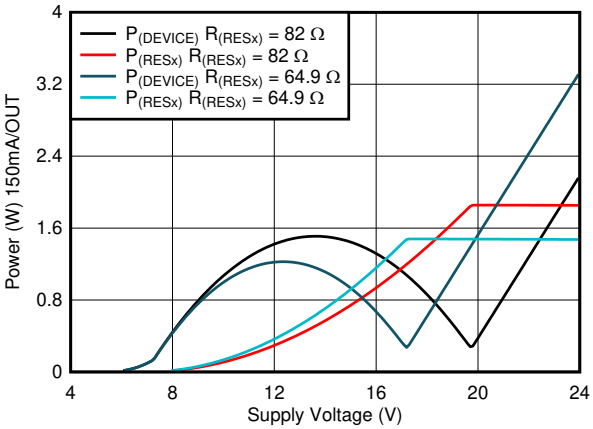

デバイスの消費電力

英語版の TI 製品についての情報を翻訳したこの資料は、製品の概要を確認する目的で便宜的に提供しているものです。該当する正式な英語版の最新情報は、www.ti.com で閲覧でき、その内容が常に優先されます。TI では翻訳の正確性および妥当性につきましては一切保証いたしません。実際の設計などの前には、必ず最新版の英語版をご参照くださいますようお願いいたします。

Table of Contents

1 特長 ... 1
2 アプリケーション ... 1
3 概要 ... 1
4 Revision History ... 2
5 Pin Configuration and Functions ... 3
6 Specifications ... 4
6.1 Absolute Maximum Ratings ... 4
6.2 ESD Ratings ... 4
6.3 Recommended Operating Conditions ... 4
6.4 Thermal Information ... 4
6.5 Electrical Characteristics ... 5
6.6 Timing Requirements ... 6
6.7 Typical Characteristics ... 8
7 Detailed Description ... 12
7.1 Overview ... 12
7.2 Functional Block Diagram ... 12
7.3 Feature Description ... 12
7.4 Device Functional Modes ... 22
8 Application and Implementation ... 23
8.1 Application Information ... 23
8.2 Typical Applications ... 23
9 Power Supply Recommendations ... 28
10 Layout ... 29
10.1 Layout Guidelines ... 29
10.2 Layout Example ... 29
11 Device and Documentation Support ... 30
11.1 Receiving Notification of Documentation Updates ... 30
11.2 サポート・リソース ... 30
11.3 Trademarks ... 30
11.4 Electrostatic Discharge Caution ... 30
11.5 Glossary ... 30
12 Mechanical, Packaging, and Orderable Information ... 31

4 Revision History

資料番号末尾の英字は改訂を表しています。その改訂履歴は英語版に準じています。

Changes from Revision * (December 2021) to Revision A (March 2022) **Page**

- ステータスを「事前情報」から「量産データ」に変更 ... 1

Copyright © 2022 Texas Instruments Incorporated

5 Pin Configuration and Functions

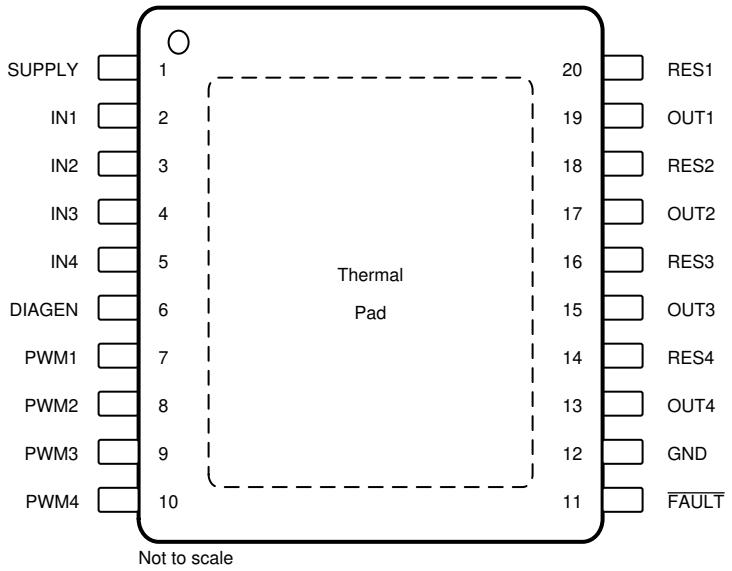

図 5-1. PWP Package 20-Pin HTSSOP With PowerPAD™ Top View

表 5-1. Pin Functions

PIN		I/O	DESCRIPTION
NAME	NO.		
SUPPLY	1	I	Device power supply
IN1	2	I	Current input for channel 1
IN2	3	I	Current input for channel 2
IN3	4	I	Current input for channel 3
IN4	5	I	Current input for channel 4
DIAGEN	6	I	Enable pin for LED open-circuit detection to avoid false open diagnostics during low-dropout operation
PWM1	7	I	PWM input for OUT1 and RES1 current output ON and OFF control
PWM2	8	I	PWM input for OUT2 and RES2 current output ON and OFF control
PWM3	9	I	PWM input for OUT3 and RES3 current output ON and OFF control
PWM4	10	I	PWM input for OUT4 and RES4 current output ON and OFF control
$\overline{\text{FAULT}}$	11	I/O	Fault output, support one-fails–all-fail fault bus
GND	12	—	Ground
OUT4	13	O	Current output for channel 4
RES4	14	O	Current output for channel 4 with external thermal resistor
OUT3	15	O	Current output for channel 3
RES3	16	O	Current output for channel 3 with external thermal resistor
OUT2	17	O	Current output for channel 2
RES2	18	O	Current output for channel 2 with external thermal resistor
OUT1	19	O	Current output for channel 1
RES1	20	O	Current output for channel 1 with external thermal resistor

Copyright © 2022 Texas Instruments Incorporated

6 Specifications

6.1 Absolute Maximum Ratings

over operating free-air temperature range (unless otherwise noted)[1]

		MIN	MAX	UNIT
Supply	SUPPLY	–0.3	45	V
High-voltage input	DIAGEN, IN1, IN2, IN3, IN4, PWM1, PWM2, PMW3, PWM4	–0.3	$V_{(SUPPLY)}$+0.3	V
High-voltage output	OUT1, OUT2, OUT3, OUT4, RES1, RES2, RES3, RES4	–0.3	$V_{(SUPPLY)}$+0.3	V
Fault bus	$\overline{FAULT}$	–0.3	$V_{(SUPPLY)}$+0.3	V
T_J	Operating junction temperature	–40	150	°C
T_{stg}	Storage temperature	–40	150	°C

(1) Operation outside the Absolute Maximum Ratings may cause permanent device damage. Absolute Maximum Ratings do not imply functional operation of the device at these or any other conditions beyond those listed under Recommended Operating Conditions. If used outside the Recommended Operating Conditions but within the Absolute Maximum Ratings, the device may not be fully functional, and this may affect device reliability, functionality, performance, and shorten the device lifetime.

6.2 ESD Ratings

				VALUE	UNIT
$V_{(ESD)}$	Electrostatic discharge	Human-body model (HBM), per AEC Q100-002[1] HBM ESD Classification Level 1C		±2000	V
		Charged-device model (CDM), per AEC Q100-011 CDM ESD Classification Level C4B	All pins	±500	
			Corner pins (SUPPLY, RES1, $\overline{FAULT}$, PWM4,)	±750	

(1) AEC Q100-002 indicates that HBM stressing shall be in accordance with the ANSI/ESDA/JEDEC JS-001 specification.

6.3 Recommended Operating Conditions

over operating free-air temperature range (unless otherwise noted)

		MIN	NOM	MAX	UNIT
SUPPLY	Device supply voltage	4.5		40	V
IN1, IN2, IN3, IN4	Sense voltage	$V_{(SUPPLY)} – V_{(CS_REG)}$			V
PWM1, PWM2, PWM3, PWM4	PWM inputs	0		$V_{(SUPPLY)}$	V
DIAGEN	Diagnostics enable pin	0		$V_{(SUPPLY)}$	V
OUT1, OUT2, OUT3, OUT4, RES1, RES2, RES3, RES4	Driver output	0		$V_{(SUPPLY)}$	V
$\overline{FAULT}$	Fault bus	0		$V_{(SUPPLY)}$	V
Operating ambient temperature, T_A		–40		125	°C

6.4 Thermal Information

THERMAL METRIC[1]		TPS92624-Q1 PWP 16 PINS	UNIT
$R_{\theta JA}$	Junction-to-ambient thermal resistance	39.4	°C/W
$R_{\theta JC(top)}$	Junction-to-case (top) thermal resistance	32.9	°C/W
$R_{\theta JB}$	Junction-to-board thermal resistance	17.7	°C/W
ψ_{JT}	Junction-to-top characterization parameter	1.0	°C/W
ψ_{JB}	Junction-to-board characterization parameter	17.7	°C/W
$R_{\theta JC(bot)}$	Junction-to-case (bottom) thermal resistance	5.2	°C/W

(1) For more information about traditional and new thermal metrics, see the *Semiconductor and IC package thermal metrics* application report.

Copyright © 2022 Texas Instruments Incorporated

6.5 Electrical Characteristics

$V_{(SUPPLY)}$ = 5 V to 40 V, $V_{(EN)}$ = 5V, T_J = –40°C to +150°C unless otherwise noted

PARAMETER		TEST CONDITIONS	MIN	TYP	MAX	UNIT
BIAS						
$V_{(POR_rising)}$	Supply voltage POR rising threshold			3.6	4.0	V
$V_{(POR_falling)}$	Supply voltage POR falling threshold		3.0	3.4		V
$I_{(Quiescent)}$	Device standby ground current	PWM = HIGH		2.0	2.5	mA
$I_{(FAULT)}$	Device supply current in fault mode	PWM = HIGH, $\overline{FAULT}$ externally pulled LOW	0.21	0.380	0.45	mA
LOGIC INPUTS (EN, DIAGEN, PWM)						
$V_{IL(DIAGEN)}$	Input logic-low voltage, DIAGEN		1.045	1.1	1.155	V
$V_{IH(DIAGEN)}$	Input logic-high voltage, DIAGEN		1.14	1.2	1.26	V
$V_{IL(PWM)}$	Input logic-low voltage, PWM		1.045	1.1	1.155	V
$V_{IH(PWM)}$	Input logic-high voltage, PWM		1.14	1.2	1.26	V
CONSTANT-CURRENT DRIVER						
$I_{(OUTx_Tot)}$	Device output-current for each channel	100% duty cycle	5		150	mA
$V_{(CS_REG)}$	Sense-resistor regulation voltage	T_A = –40°C to +125°C	144	150	156	mV
ALL $\Delta V_{(CS_c2c)}$	Channel to channel mismatch	$\Delta V_{(CS_c2c)} = 1 - V_{(CS_REGx)}/V_{avg(CS_REG)}$	–3		+3	%
ALL $\Delta V_{(CS_d2d)}$	Device to device mismatch	$\Delta V_{(CS_d2d)} = 1 - V_{avg(CS_REG)}/V_{nom(CS_REG)}$	–4		+4	%
$R_{(CS_REG)}$	Sense-resistor range		0.96		31.2	Ω
$V_{(DROPOUT)}$	Voltage dropout from INx to OUTx, RESx open	current setting of 100 mA		200	400	mV
		current setting of 150 mA		300	600	
	Voltage dropout from INx to RESx, OUTx open	current setting of 100 mA		280	600	mV
		current setting of 150 mA		420	900	
$I_{(RESx)}$	Ratio of RESx current to total current	$I_{(RESx)}/I_{(OUTx_Tot)}$, $V_{(INx)} - V_{(RESx)}$ > 1 V	95			%
DIAGNOSTICS						
$V_{(OPEN_th_rising)}$	LED open rising threshold, $V_{(IN)} - V_{(OUT)}$		180	300	420	mV
$V_{(OPEN_th_falling)}$	LED open falling threshold, $V_{(IN)} - V_{(OUT)}$			450		mV
$V_{(SG_th_rising)}$	Channel output short-to-ground rising threshold		1.14	1.2	1.26	V
$V_{(SG_th_falling)}$	Channel output short-to-ground falling threshold		0.855	0.9	0.945	V
$I_{(Retry_OUTx)}$	Channel output $V_{(OUT)}$ short-to-ground retry current		0.64	1.08	1.528	mA
$I_{(Retry_RESx)}$	Channel output $V_{(OUT)}$ short-to-ground retry current		0.64	1.08	1.528	mA
FAULT						
$V_{IL(FAULT)}$	Logic input low threshold				0.7	V
$V_{IH(FAULT)}$	Logic input high threshold		2			V
$t_{(FAULT_rising)}$	Fault detection rising edge deglitch time			10		µs
$t_{(FAULT_falling)}$	Fault detection falling edge deglitch time			20		µs
$I_{(FAULT_pulldown)}$	$\overline{FAULT}$ internal pulldown current	$V_{(\overline{FAULT})}$ = 0.4 V	2	3	4	mA
$I_{(FAULT_pullup)}$	$\overline{FAULT}$ internal pullup current		6	10	14	µA
$I_{(FAULT_leakage)}$	$\overline{FAULT}$ leakage current	$V_{(\overline{FAULT})}$ = 20 V		0.01	2	µA
TIMING						
$t_{(PWM_delay_rising)}$	PWM rising edge delay to 10% of output current, t_1 as shown in 図 7-1	$V_{(SUPPLY)}$ = 12 V, $V_{(OUT)}$ = 6 V, $V_{(CS_REG)}$ = 150 mV, $R_{(SNSx)}$ = 1 Ω and $R_{(RESx)}$ = 56 Ω		3		µs
		$V_{(SUPPLY)}$ = 12 V, $V_{(OUT)}$ = 6 V, $V_{(CS_REG)}$ = 150 mV, $R_{(SNSx)}$ = 30 Ω and $R_{(RESx)}$ = 56 Ω		3		µs
$t_{(PWM_delay_falling)}$	PWM falling edge delay to 90% of output current, t_2 as shown in 図 7-1	$V_{(SUPPLY)}$ = 12 V, $V_{(OUT)}$ = 6 V, $V_{(CS_REG)}$ = 150 mV, $R_{(SNSx)}$ = 1 Ω and $R_{(RESx)}$ = 56 Ω		3.8		µs
		$V_{(SUPPLY)}$ = 12 V, $V_{(OUT)}$ = 6 V, $V_{(CS_REG)}$ = 150 mV, $R_{(SNSx)}$ = 30 Ω and $R_{(RESx)}$ = 56 Ω		3.8		µs
$t_{(Current_rising)}$	Output current rising from 10% to 90%, t_3 as shown in 図 7-1	$V_{(SUPPLY)}$ = 12 V, $V_{(OUT)}$ = 6 V, $V_{(CS_REG)}$ = 150 mV, $R_{(SNSx)}$ = 1 Ω and $R_{(RESx)}$ = 56 Ω		2		µs
		$V_{(SUPPLY)}$ = 12 V, $V_{(OUT)}$ = 6 V, $V_{(CS_REG)}$ = 150 mV, $R_{(SNSx)}$ = 30 Ω and $R_{(RESx)}$ = 56 Ω		1		µs

Copyright © 2022 Texas Instruments Incorporated

6.5 Electrical Characteristics (continued)

$V_{(SUPPLY)}$ = 5 V to 40 V, $V_{(EN)}$ = 5V, T_J = –40°C to +150°C unless otherwise noted

PARAMETER		TEST CONDITIONS	MIN	TYP	MAX	UNIT
$t_{(Current_falling)}$	Output current falling from 90% to 10%, t_4 as shown in 図 7-1	$V_{(SUPPLY)}$ = 12 V, $V_{(OUT)}$ = 6 V, $V_{(CS_REG)}$ = 150 mV, $R_{(SNSx)}$ = 1 Ω and $R_{(RESx)}$ = 56 Ω		5		µs
		$V_{(SUPPLY)}$ = 12 V, $V_{(OUT)}$ = 6 V, $V_{(CS_REG)}$ = 150 mV, $R_{(SNSx)}$ = 30 Ω and $R_{(RESx)}$ = 56 Ω		0.2		µs
$t_{(STARTUP)}$	SUPPLY rising edge to 10% output current, t_5 as shown in 図 7-1	$V_{(SUPPLY)}$ = 12 V, $V_{(OUT)}$ = 6 V, $V_{(CS_REG)}$ = 150 mV, $R_{(SNSx)}$ = 1 Ω and $R_{(RESx)}$ = 56 Ω		85		µs
$t_{(OPEN_deg)}$	LED-open fault detection deglitch time, t_6 as shown in 図 7-4			125		µs
$t_{(SG_deg)}$	Output short-to-ground detection deglitch time, t_7 as shown in 図 7-3			125		µs
$t_{(Recover_deg)}$	Open and Short fault recovery deglitch time, t_8 as shown in 図 7-3 and 図 7-4			125		µs
$t_{(FAULT_recovery)}$	Fault recovery delay time, t_9 as shown in 図 7-3 and 図 7-4			50		µs
$t_{(TSD_deg)}$	Thermal over temperature deglitch time			50		µs
THERMAL PROTECTION						
$T_{(TSD)}$	Thermal shutdown junction temperature threshold		157	172	187	°C
$T_{(TSD_HYS)}$	Thermal shutdown junction temperature hysteresis			15		°C

6.6 Timing Requirements

		MIN	NOM	MAX	UNIT
$t_{(PWM_delay_rising)}$	PWM rising edge delay, $V_{IH(PWM)}$ voltage to 10% of output current closed loop when $V_{(SUPPLY)}$ = 12 V, $V_{(OUT)}$ = 6 V, $V_{(CS_REG)}$ = 100 mV, $R_{(SNSx)}$ = 0.665 Ω and $R_{(RESx)}$ = 56 Ω, t_1 as shown in 図 7-1		3	6	µs
	PWM rising edge delay, $V_{IH(PWM)}$ voltage to 10% of output current closed loop when $V_{(SUPPLY)}$ = 12 V, $V_{(OUT)}$ = 6 V, $V_{(CS_REG)}$ = 100 mV, $R_{(SNSx)}$ = 1 Ω and $R_{(RESx)}$ = 110 Ω, t_1 as shown in 図 7-1		3	6	µs
	PWM rising edge delay, $V_{IH(PWM)}$ voltage to 10% of output current closed loop when $V_{(SUPPLY)}$ = 12 V, $V_{(OUT)}$ = 6 V, $V_{(CS_REG)}$ = 100 mV, $R_{(SNSx)}$ = 10 Ω and $R_{(RESx)}$ = 27 Ω, t_1 as shown in 図 7-1		3	6	µs
$t_{(PWM_delay_falling)}$	PWM falling edge delay, $V_{IL(PWM)}$ voltage to 90% of output current open loop when $V_{(SUPPLY)}$ = 12 V, $V_{(OUT)}$ = 6 V, $V_{(CS_REG)}$ = 100 mV, $R_{(SNSx)}$ = 0.665 Ω and $R_{(RESx)}$ = 56 Ω, t_3 as shown in 図 7-1	1.2	2.4	3.6	µs
	PWM falling edge delay, $V_{IL(PWM)}$ voltage to 90% of output current open loop when $V_{(SUPPLY)}$ = 12 V, $V_{(OUT)}$ = 6 V, $V_{(CS_REG)}$ = 100 mV, $R_{(SNSx)}$ = 1 Ω and $R_{(RESx)}$ = 110 Ω, t_3 as shown in 図 7-1	1.6	2.6	4.2	µs
	PWM falling edge delay, $V_{IL(PWM)}$ voltage to 90% of output current open loop when $V_{(SUPPLY)}$ = 12 V, $V_{(OUT)}$ = 6 V, $V_{(CS_REG)}$ = 100 mV, $R_{(SNSx)}$ = 10 Ω and $R_{(RESx)}$ = 27 Ω, t_3 as shown in 図 7-1	1.6	2.6	4.2	µs
$t_{(Current_rising)}$	Output current rising from 10% to 90% when $V_{(SUPPLY)}$ = 12 V, $V_{(OUT)}$ = 6 V, $V_{(CS_REG)}$ = 100 mV, $R_{(SNSx)}$ = 0.665 Ω and $R_{(RESx)}$ = 56 Ω, t_2 as shown in 図 7-1		2	5	µs
	Output current rising from 10% to 90% when $V_{(SUPPLY)}$ = 12 V, $V_{(OUT)}$ = 6 V, $V_{(CS_REG)}$ = 100 mV, $R_{(SNSx)}$ = 1 Ω and $R_{(RESx)}$ = 110 Ω, t_2 as shown in 図 7-1		3	6	µs
	Output current rising from 10% to 90% when $V_{(SUPPLY)}$ = 12 V, $V_{(OUT)}$ = 6 V, $V_{(CS_REG)}$ = 100 mV, $R_{(SNSx)}$ = 10 Ω and $R_{(RESx)}$ = 27 Ω, t_2 as shown in 図 7-1		3	6	µs
$t_{(Current_falling)}$	Output current falling from 90% to 10% when $V_{(SUPPLY)}$ = 12 V, $V_{(OUT)}$ = 6 V, $V_{(CS_REG)}$ = 100 mV, $R_{(SNSx)}$ = 0.665 Ω and $R_{(RESx)}$ = 56 Ω, t_4 as shown in 図 7-1		5	7	µs
	Output current falling from 90% to 10% when $V_{(SUPPLY)}$ = 12 V, $V_{(OUT)}$ = 6 V, $V_{(CS_REG)}$ = 50 mV, $R_{(SNSx)}$ = 1 Ω and $R_{(RESx)}$ = 110 Ω, t_4 as shown in 図 7-1		1	2	µs
	Output current falling from 90% to 10% when $V_{(SUPPLY)}$ = 12 V, $V_{(OUT)}$ = 6 V, $V_{(CS_REG)}$ = 50 mV, $R_{(SNSx)}$ = 10 Ω and $R_{(RESx)}$ = 27 Ω, t_4 as shown in 図 7-1		1	2	µs

Copyright © 2022 Texas Instruments Incorporated

6.6 Timing Requirements (continued)

		MIN	NOM	MAX	UNIT
$t_{(STARTUP)}$	SUPPLY rising edge to 10% output current when $C_{(IREF)}$ = $C_{(ICTRL)}$= 10 pF, $V_{(OUT)}$ = 6 V, $V_{(CS_REG)}$ = 100 mV, $R_{(SNSx)}$ = 0.665 Ω and $R_{(RESx)}$ = 56 Ω, t_5 as shown in 図 7-1		55	100	µs
	SUPPLY rising edge to 10% output current when $C_{(IREF)}$ = $C_{(ICTRL)}$= 10 pF, $V_{(OUT)}$ = 6 V, $V_{(CS_REG)}$ = 100 mV, $R_{(SNSx)}$ = 10 Ω and $R_{(RESx)}$ = 110 Ω, t_5 as shown in 図 7-1		55	100	µs
	SUPPLY rising edge to 10% output current when $C_{(IREF)}$ = $C_{(ICTRL)}$= 10 pF, $V_{(OUT)}$ = 6 V, $V_{(CS_REG)}$ = 100 mV, $R_{(SNSx)}$ = 1 Ω and $R_{(RESx)}$ = 27 Ω, t_5 as shown in 図 7-1		55	100	µs
$t_{(OPEN_deg)}$	LED-open fault-deglitch time, t_6 as shown in 図 7-4	75	125	199	µs
$t_{(SG_deg)}$	Output short-to-ground detection deglitch time, t_7 as shown in 図 7-3	75	125	199	µs
$t_{(Recover_deg)}$	Open and Short fault recovery deglitch time, t_8 as shown in 図 7-4 and 図 7-3	75	125	199	µs
$t_{(FAULT_deg)}$	Fault pin digital deglitch time	7	10	13	µs
$t_{(FAULT_recovery)}$	Fault recovery delay time, t_9 as shown in 図 7-4 and 図 7-3	30	50	84	µs
$t_{(TSD_deg)}$	Thermal over temperature deglitch time	30	50	84	µs

6.7 Typical Characteristics

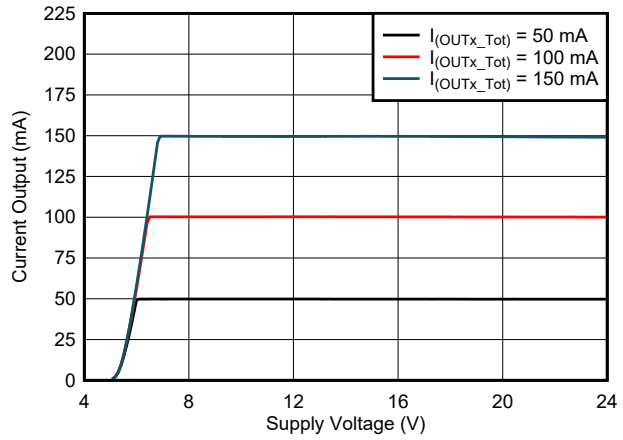

図 6-1. Output Current vs Supply Voltage

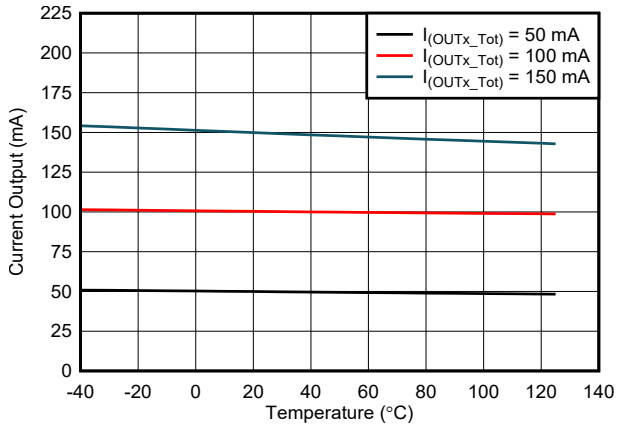

図 6-2. Output Current vs Temperature

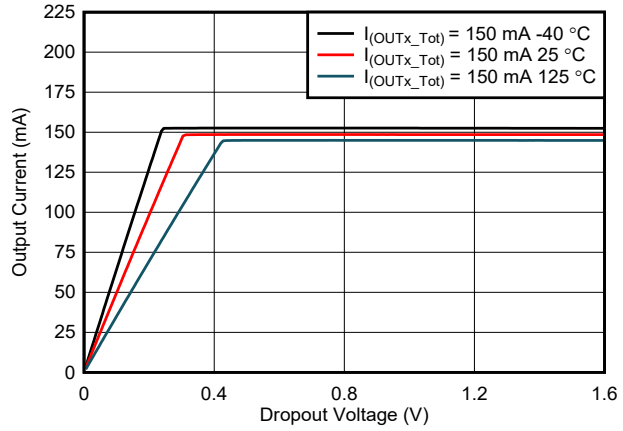

図 6-3. Output Current vs Dropout Voltage

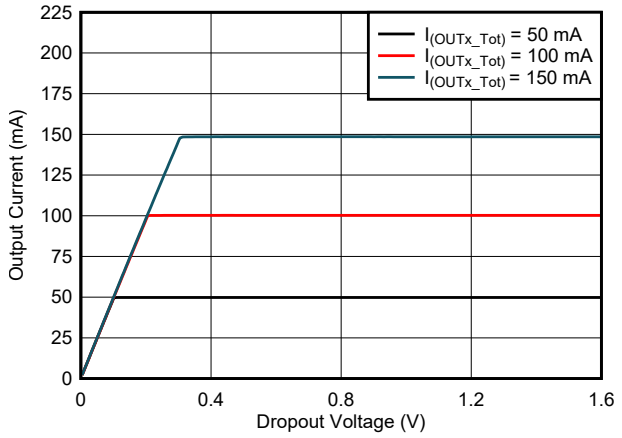

図 6-4. Output Current vs Dropout Voltage

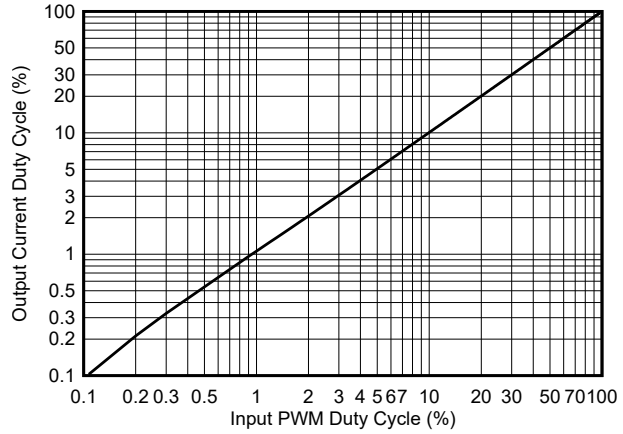

図 6-5. PWM Output Duty Cycle vs PWM Input Duty Cycle

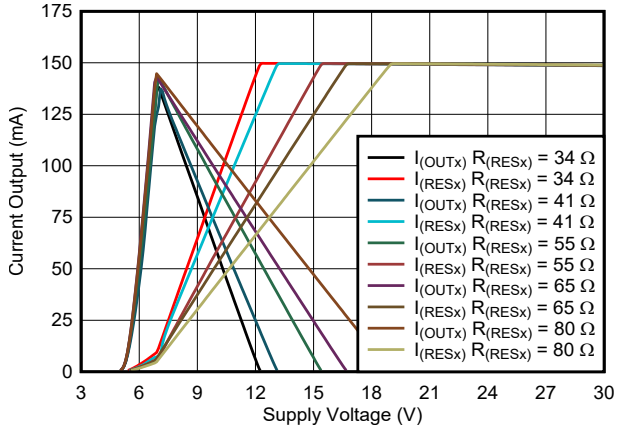

図 6-6. Output Current Distribution vs Supply Voltage

Copyright © 2022 Texas Instruments Incorporated

6.7 Typical Characteristics (continued)

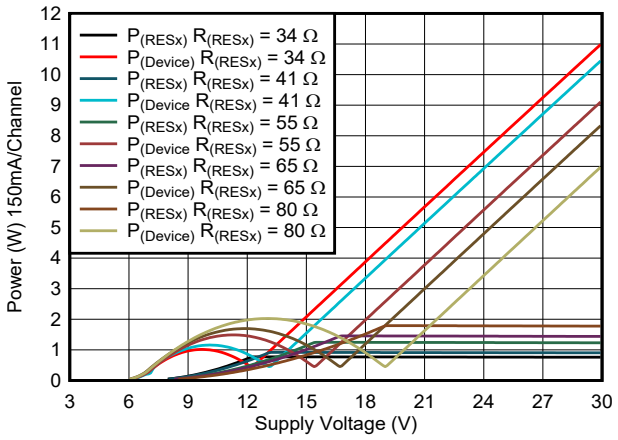

図 6-7. Power Dissipation vs Supply Voltage

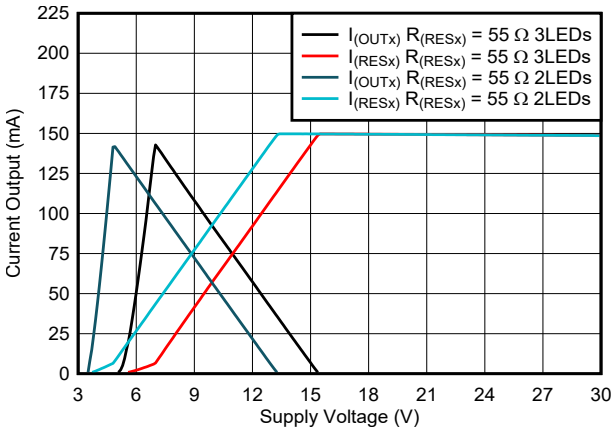

図 6-8. Output Current Distribution vs Supply Voltage

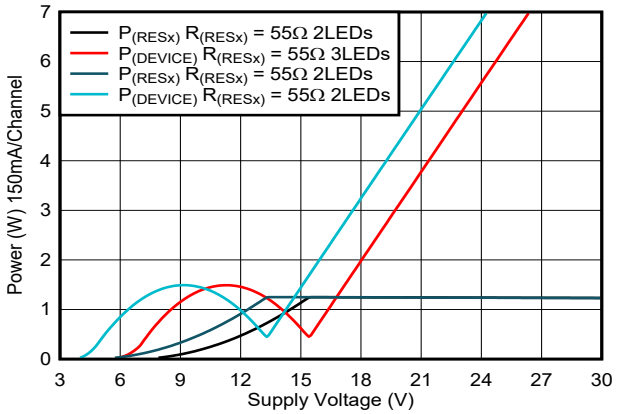

図 6-9. Power Dissipation vs Supply Voltage

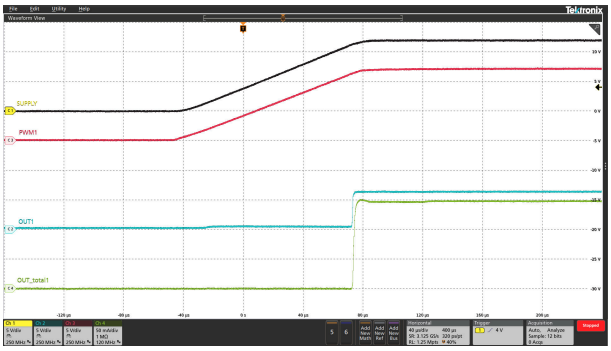

Ch1 = $V_{(SUPPLY)}$ Ch2 = $V_{(OUT1)}$ Ch3 = $V_{(PWM1)}$
Ch4 = $I_{(OUT_Tot)}$

図 6-10. Power Up Sequence

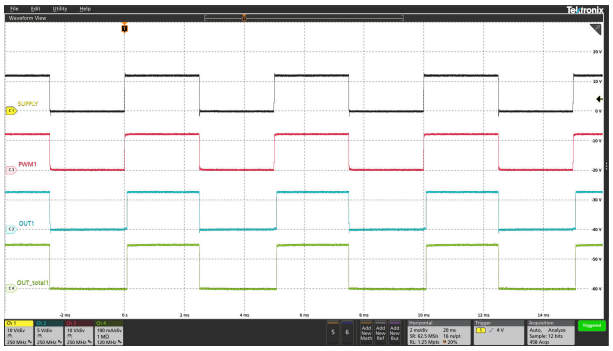

Ch1 = $V_{(SUPPLY)}$ Ch2 = $V_{(OUT1)}$ Ch3 = $V_{(PWM1)}$
Ch4 = $I_{(OUT_Tot)}$

図 6-11. Supply Dimming at 200 Hz

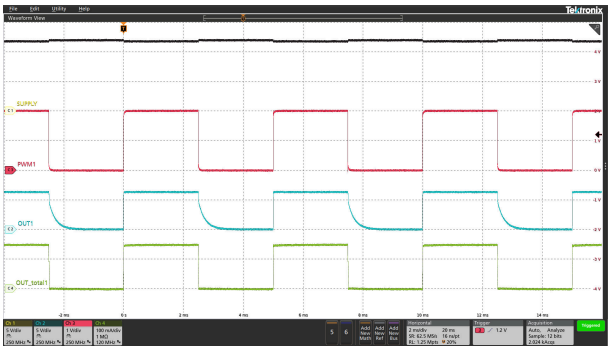

Ch1 = $V_{(SUPPLY)}$ Ch2 = $V_{(OUT1)}$ Ch3 = $V_{(PWM1)}$
Ch4 = $I_{(OUT_Tot)}$

図 6-12. PWM Dimming at 200 Hz

6.7 Typical Characteristics (continued)

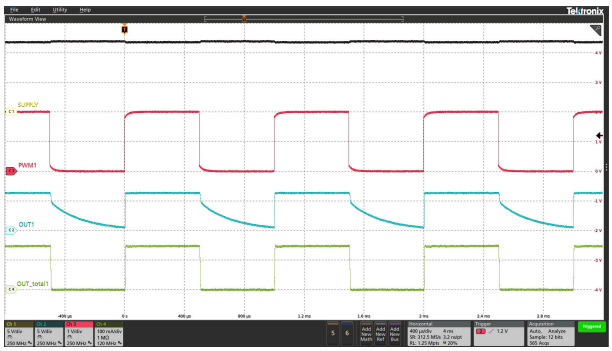

Ch1 = $V_{(SUPPLY)}$ Ch2 = $V_{(OUT1)}$ Ch3 = $V_{(PWM1)}$
Ch4 = $I_{(OUT_Tot)}$

図 6-13. PWM Dimming at 1 kHz

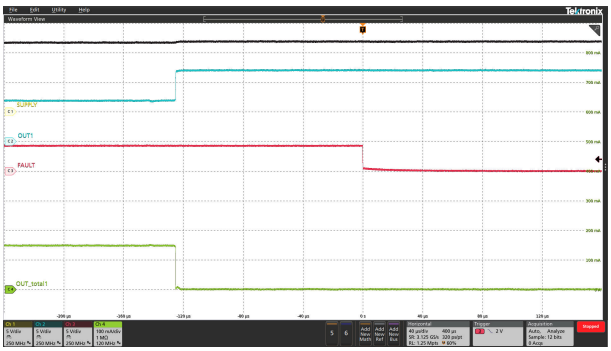

Ch1 = $V_{(SUPPLY)}$ Ch2 = $V_{(OUT1)}$ Ch3 = $V_{(\overline{FAULT})}$
Ch4 = $I_{(OUT_Tot)}$

図 6-14. LED Open Protection

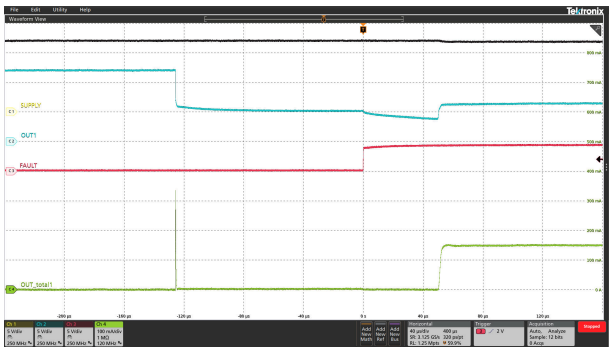

Ch1 = $V_{(SUPPLY)}$ Ch2 = $V_{(OUT1)}$ Ch3 = $V_{(\overline{FAULT})}$
Ch4 = $I_{(OUT_Tot)}$

図 6-15. LED Open Protection Recovery

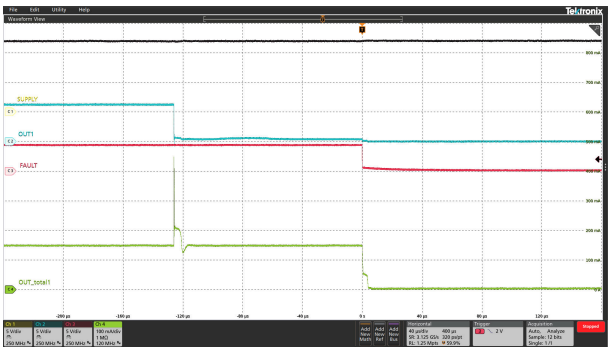

Ch1 = $V_{(SUPPLY)}$ Ch2 = $V_{(OUT1)}$ Ch3 = $V_{(\overline{FAULT})}$
Ch4 = $I_{(OUT_Tot)}$

図 6-16. LED Short-Circuit Protection

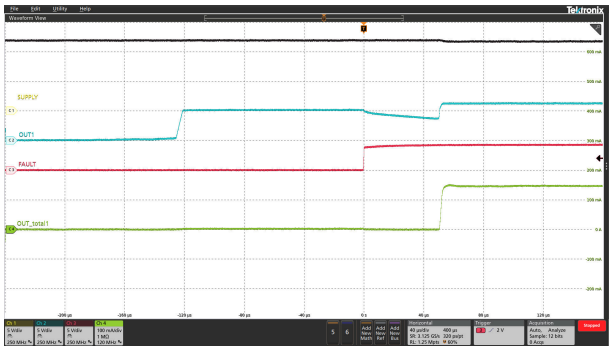

Ch1 = $V_{(SUPPLY)}$ Ch2 = $V_{(OUT1)}$ Ch3 = $V_{(\overline{FAULT})}$
Ch4 = $I_{(OUT_Tot)}$

図 6-17. LED Short-Circuit Protection Recovery

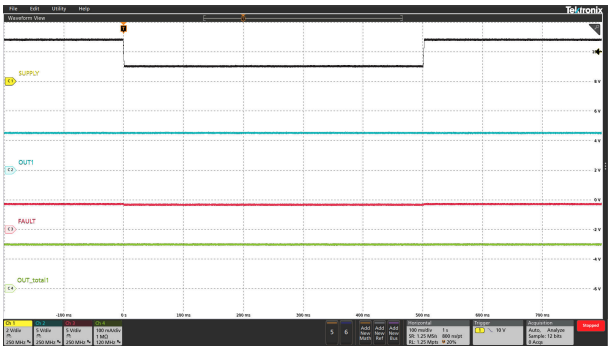

Ch1 = $V_{(SUPPLY)}$ Ch2 = $V_{(OUT1)}$ Ch3 = $V_{(\overline{FAULT})}$
Ch4 = $I_{(OUT_Tot)}$ DIAGEN = High when Supply > 8 V

図 6-18. Transient Undervoltage

Copyright © 2022 Texas Instruments Incorporated

6.7 Typical Characteristics (continued)

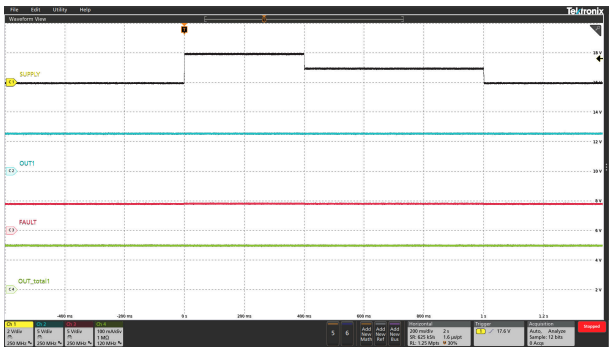

Ch1 = $V_{(SUPPLY)}$ Ch2 = $V_{(OUT1)}$ Ch3 = $V_{(\overline{FAULT})}$
Ch4 = $I_{(OUT_Tot)}$ DIAGEN = High when Supply > 8 V

図 6-19. Transient Overvoltage

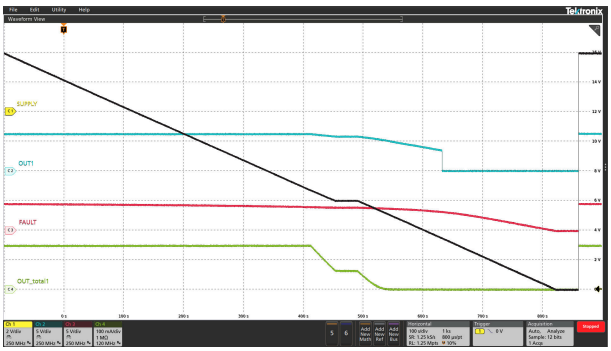

Ch1 = $V_{(SUPPLY)}$ Ch2 = $V_{(OUT1)}$ Ch3 = $V_{(\overline{FAULT})}$
Ch4 = $I_{(OUT_Tot)}$ DIAGEN = High when Supply > 8 V

図 6-20. Slow Decrease and Quick Increase of Supply Voltage

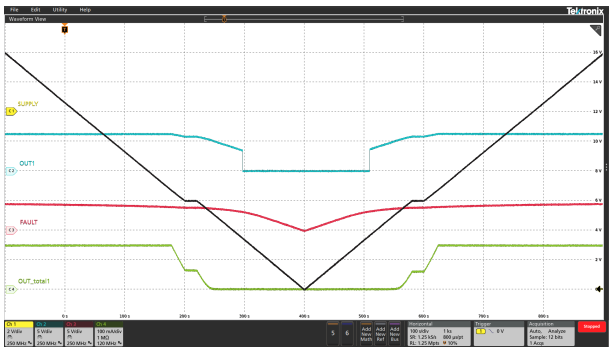

Ch1 = $V_{(SUPPLY)}$ Ch2 = $V_{(OUT1)}$ Ch3 = $V_{(\overline{FAULT})}$
Ch4 = $I_{(OUT_Tot)}$ DIAGEN = High when Supply > 8 V

図 6-21. Slow Decrease and Slow Increase of Supply Voltage

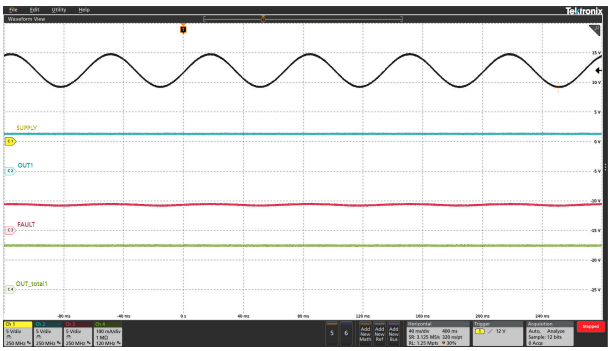

Ch1 = $V_{(SUPPLY)}$ Ch2 = $V_{(OUT1)}$ Ch3 = $V_{(\overline{FAULT})}$
Ch4 = $I_{(OUT_Tot)}$ DIAGEN = High when Supply > 8 V

図 6-22. Superimposed Alternating Voltage 15 Hz

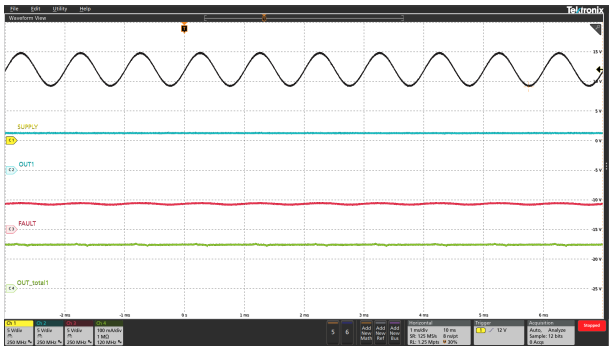

Ch1 = $V_{(SUPPLY)}$ Ch2 = $V_{(OUT1)}$ Ch3 = $V_{(\overline{FAULT})}$
Ch4 = $I_{(OUT_Tot)}$ DIAGEN = High when Supply > 8 V

図 6-23. Superimposed Alternating Voltage 1 kHz

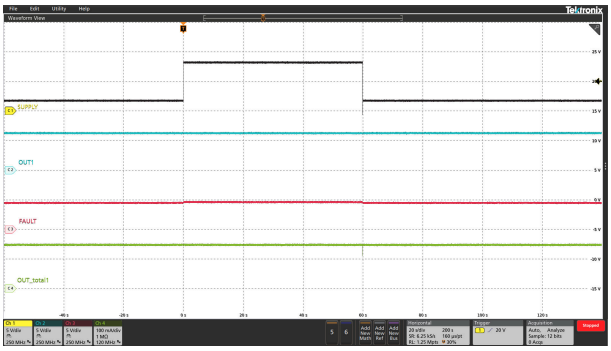

Ch1 = $V_{(SUPPLY)}$ Ch2 = $V_{(OUT1)}$ Ch3 = $V_{(\overline{FAULT})}$
Ch4 = $I_{(OUT_Tot)}$ DIAGEN = High when Supply > 8 V

図 6-24. Jump Start

7 Detailed Description

7.1 Overview

The TPS92624-Q1 is a four-channel, high-side linear LED driver supporting external thermal sharing resistor to achieve the controllable junction temperature rising. The device can be directly powered by automotive battery and output full load up to 600-mA current to LED with limited power dissipation on the device. The current output at each channel can be independently set by external $R_{(SNSx)}$ resistors. Current flows from the supply through the $R_{(SNSx)}$ resistor into the integrated current regulation circuit and to the LEDs through OUTx pin and RESx pin. TPS92624-Q1 device supports both supply control and PWM control to turn LED ON and OFF. The LED brightness is also adjustable by voltage duty cycle applied on either SUPPLY or PWMx pins with frequency above 100 Hz. The TPS92624-Q1 provides full diagnostics to keep the system operating reliably including LED open/short circuit detection, supply POR and thermal shutdown protection. TPS92624-Q1 device is in a HTSSOP package with total 20 leads. The TPS92624-Q1 can be used with other TPS9261x-Q1, TPS9262x-Q1, TPS9263x-Q1 and TPS92830-Q1 family devices together to achieve one-fails-all-fail protection by tying all $\overline{FAULT}$ pins together as a fault bus.

7.2 Functional Block Diagram

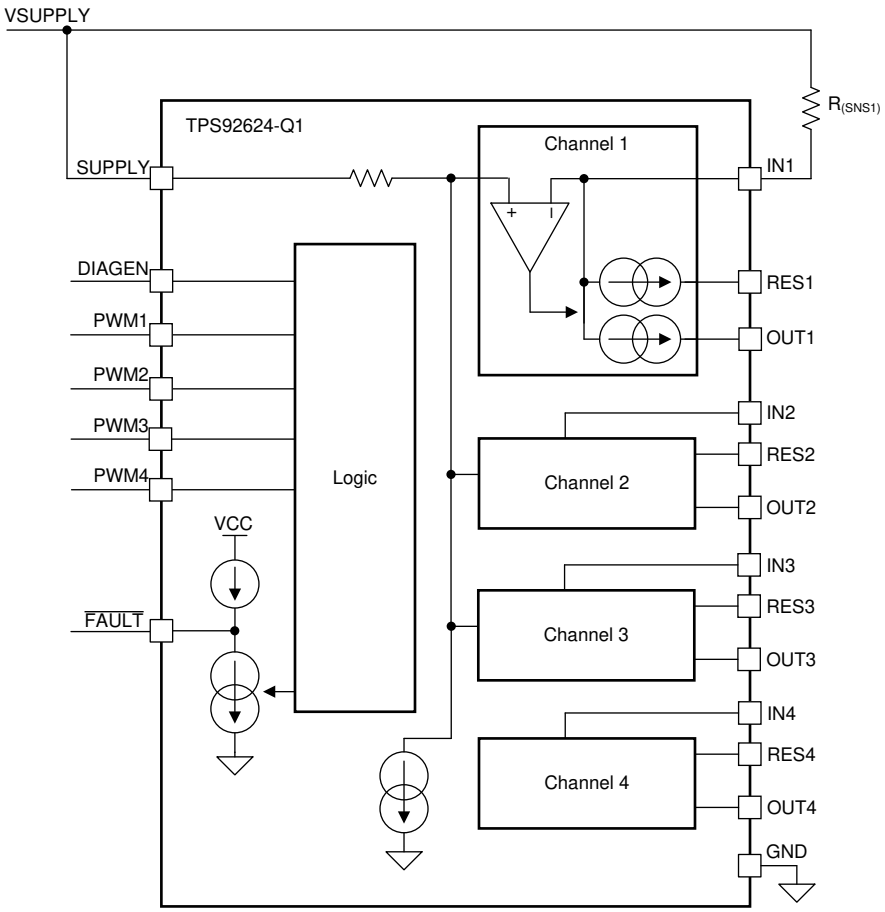

7.3 Feature Description

7.3.1 Power Supply (SUPPLY)

7.3.1.1 Power-On Reset (POR)

The TPS92624-Q1 device has an internal power-on-reset (POR) function. When power is applied to the SUPPLY pin, the internal POR circuit holds the device in reset state until $V_{(SUPPLY)}$ is above $V_{(POR_rising)}$.

Copyright © 2022 Texas Instruments Incorporated

7.3.1.2 Suppply Current in Fault Mode

The TPS92624-Q1 device consumes minimal quiescent current, $I_{(FAULT)}$, into SUPPLY when the $\overline{FAULT}$ pin is externally pulled LOW. At the same time, the device shuts down all four output drivers.

If device detects an internal fault, it pulls down the $\overline{FAULT}$ pin by an internal typical 3-mA constant current as a fault indication to the fault bus.

7.3.2 Enable and Shutdown

The device starts to operate as long as the SUPPLY voltage is higher than $V_{(POR_rising)}$. The TPS92624-Q1 shuts down when SUPPLY voltage is lower than $V_{(POR_falling)}$.

7.3.3 Constant-Current Output and Setting (INx)

The TPS92624-Q1 device is a high-side current driver for driving LEDs. The device controls each output current through regulating the voltage drop on an external high-side current-sense resistor, $R_{(SNSx)}$ independently for each channel. An integrated error amplifier drives an internal power transistor to maintain the voltage drop on the current-sense resistor $R_{(SNSx)}$ to $V_{(CS_REG)}$ and therefore regulates the current output to target value. When the output current is in regulation, the current value for each channel can be calculated by using 式 1.

$$I_{(OUTx_Tot)} = \frac{V_{(CS_REG)}}{R_{(SNSx)}} \tag{1}$$

where

- $V_{(CS_REG)}$ = 150 mV
- x = 1, 2, 3 or 4 for output channel 1, 2, 3 or 4

When the supply voltage drops below total LED string forward voltage plus required headroom voltage, the sum of $V_{(DROPOUT)}$ and $V_{(CS_REG)}$, the TPS92624-Q1 is not able to deliver enough current output as set by the value of $R_{(SNSx)}$, and the voltage across the current-sense resistor $R_{(SNSx)}$ is less than $V_{(CS_REG)}$.

7.3.4 Thermal Sharing Resistor (OUTx and RESx)

The TPS92624-Q1 device provides two current output paths for each channel. Current flows from the supply through the $R_{(SNSx)}$ resistor into the integrated current regulation circuit and to the LEDs through OUTx pin and RESx pin. The current output on both OUTx pin and RESx pin is independently regulated to achieve total required current output. The summed current of OUTx and RESx is equal to the current through the $R_{(SNSx)}$ resistor in the channel. The OUTx connects to anode of LEDs load in serial directly, however RESx connects to the LEDs through an external resistor to share part of the power dissipation and reduce the thermal accumulation in TPS92624-Q1.

The integrated independent current regulation in TPS92624-Q1 dynamically adjusts the output current on both OUTx and RESx output to maintain the stable summed current for LED. The TPS92624-Q1 always regulates the current output to the RESx pin as much as possible until the RESx current path is saturated, and the rest of required current is regulated out of the OUTx. As a result, the most of the current to LED outputs through the RESx pin when the voltage dropout is large between SUPPLY and LED required total forward voltage. In the opposite case, the most of the current to LED outputs through the OUTx pin when the voltage headroom is relative low between SUPPLY and LED required forward voltage.

7.3.5 PWM Control (PWMx)

The pulse width modulation (PWM) input of the TPS92624-Q1 functions as enable for the output current. When the voltage applied on the PWM pin is higher than $V_{IH(PWM)}$, the relevant output current is enabled. When the voltage applied on PWM pin is lower than $V_{IL(PWM)}$, the output current is disabled as well as the diagnostic features. Besides output current enable and disable function, the PWM input of TPS92624-Q1 also supports adjustment of the average current output for brightness control if the frequency of applied PWM signal is higher than 100 Hz, which is out of visible frequency range of human eyes. TI recommends a 200-Hz PWM signal with 1% to 100% duty cycle input for brightness control. Please refer to 図 8-4 for typical PWM dimming application.

The TPS92624-Q1 device has four PWM input pins: PWM1, PWM2, , PWM3 and PWM4 to control each of current output channel independently. PWM1 input controls the output channel1 for both OUT1 and RES1, PWM2 input controls the output channel2 for both OUT2 and RES2, PWM3 input controls the output channel3 for both OUT3 and RES3, and PWM4 input controls the output channel4 for both OUT4 and RES4. 図 7-1 illustrates the timing for PWM input and current output.

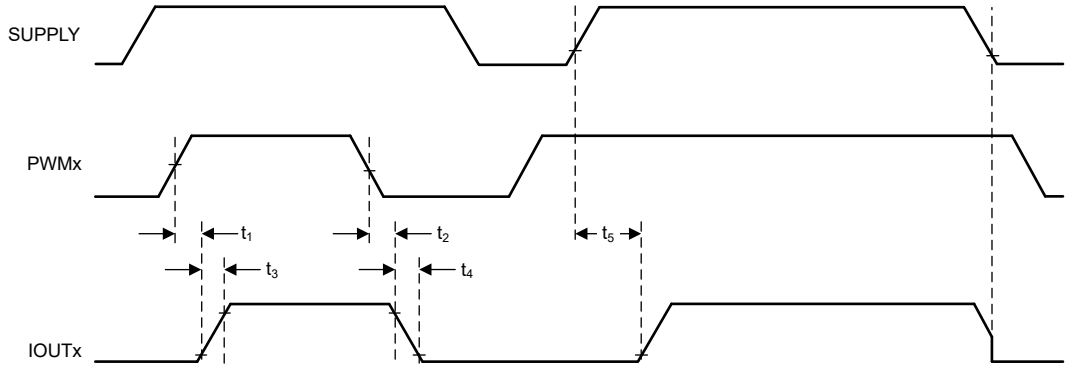

図 7-1. Power On Sequence and PWM Dimming Timing

The detailed information and value of each time period in 図 7-1 is described in *Timing Requirements*.

7.3.6 Supply Control

The TPS92624-Q1 can support supply control to turn ON and OFF output current. When the voltage applied on the SUPPLY pin is higher than the LED string forward voltage plus needed headroom voltage at required current, and the PWM pin voltage is high, the output current is turned ON and well regulated. However, if the voltage applied on the SUPPLY pin is lower than $V_{(POR_falling)}$, the output current is turned OFF. With this feature, the power supply voltage in designed pattern can control the output current ON and OFF. The brightness is adjustable if the ON and OFF frequency is fast enough. Because of the high accuracy design of PWM threshold in TPS92624-Q1, TI recommends a resistor divider on the PWM pin to set the SUPPLY threshold higher than LED forward voltage plus required headroom voltage as shown in 図 7-2. The headroom voltage is basically the summation of $V_{(DROPOUT)}$ and $V_{(CS_REG)}$. When the voltage on the PWM pin is higher than $V_{IH(PWM)}$, the output current is turned ON. However, when the voltage on the PWM is lower than $V_{IL(PWM)}$, the output current is turned OFF. The SUPPLY threshold voltage can be calculated by using 式 2.

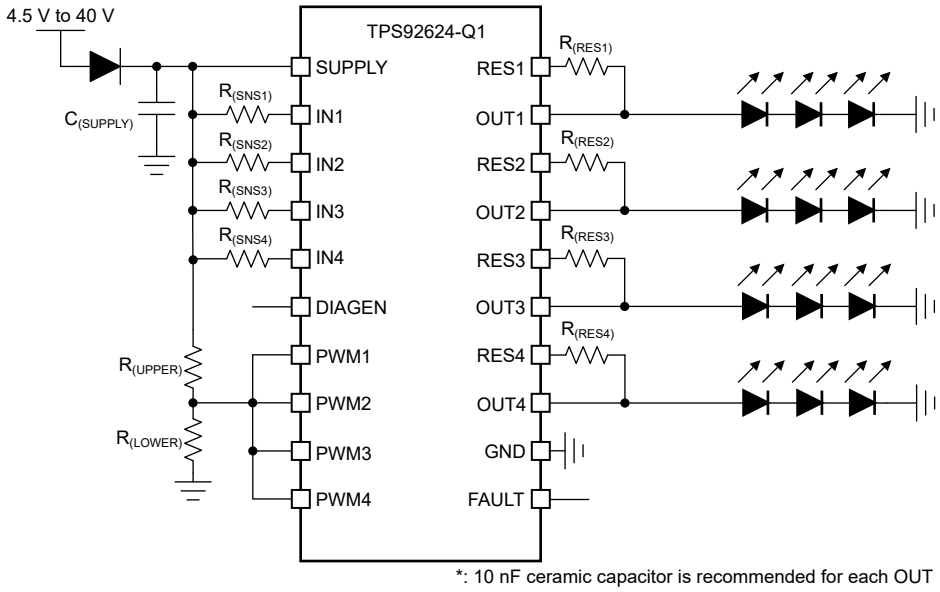

図 7-2. Application Schematic for Supply Control LED Brightness

Copyright © 2022 Texas Instruments Incorporated

$$V_{(SUPPLY_PWM_th_rising)} = V_{IH(PWM)} \times \left(1 + \frac{R_{(UPPER)}}{R_{(LOWER)}}\right) \quad (2)$$

where

- $V_{IH(PWM)}$ = 1.26 V (maximum)

7.3.7 Diagnostics

The TPS92624-Q1 device provides advanced diagnostics and fault-protection features for automotive exterior lighting systems. The device is able to detect and protect fault from LED-string short-to-GND, LED-string open-circuit and junction over-temperature scenarios. The device also supports a one-fails–all-fail fault bus design that can flexibly fit different regulatory requirements.

7.3.7.1 LED Short-to-GND Detection

The TPS92624-Q1 device has LED short-to-GND detection. The LED short-to-GND detection monitors the output voltage when the output current is enabled. Once a short-to-GND LED failure is detected, the device turns off the faulty channel and retries automatically, regardless of the state of the PWM input. If the retry mechanism detects the removal of the LED short-to-GND fault, the device resumes to normal operation.

The TPS92624-Q1 monitors both $V_{(OUTx)}$ voltage and $V_{(RESx)}$ voltage of each channel and compares it with the internal reference voltage to detect a short-to-GND failure. If $V_{(OUTx)}$ or $V_{(RESx)}$ voltage falls below $V_{(SG_th_falling)}$ longer than the deglitch time of $t_{(SG_deg)}$, the device asserts the short-to-GND fault and pulls low the $\overline{FAULT}$ pin. During the deglitching time period, if $V_{(OUTx)}$ and $V_{(RESx)}$ rises above $V_{(SG_th_rising)}$, the timer is reset.

Once the TPS92624-Q1 has asserted a short-to-GND fault, the device turns off the faulty output channel and retries automatically with a small current. During retrying, the device sources a small current $I_{(Retry)}$ from SUPPLY to OUT and RES to pull up the LED loads continuously. After auto-retry detects output voltage rising above $V_{(SG_th_rising)}$, it clears the short-to-GND fault and resumes to normal operation. 図 7-3 illustrates the timing for LED short-circuit detection, protection, retry and recovery.

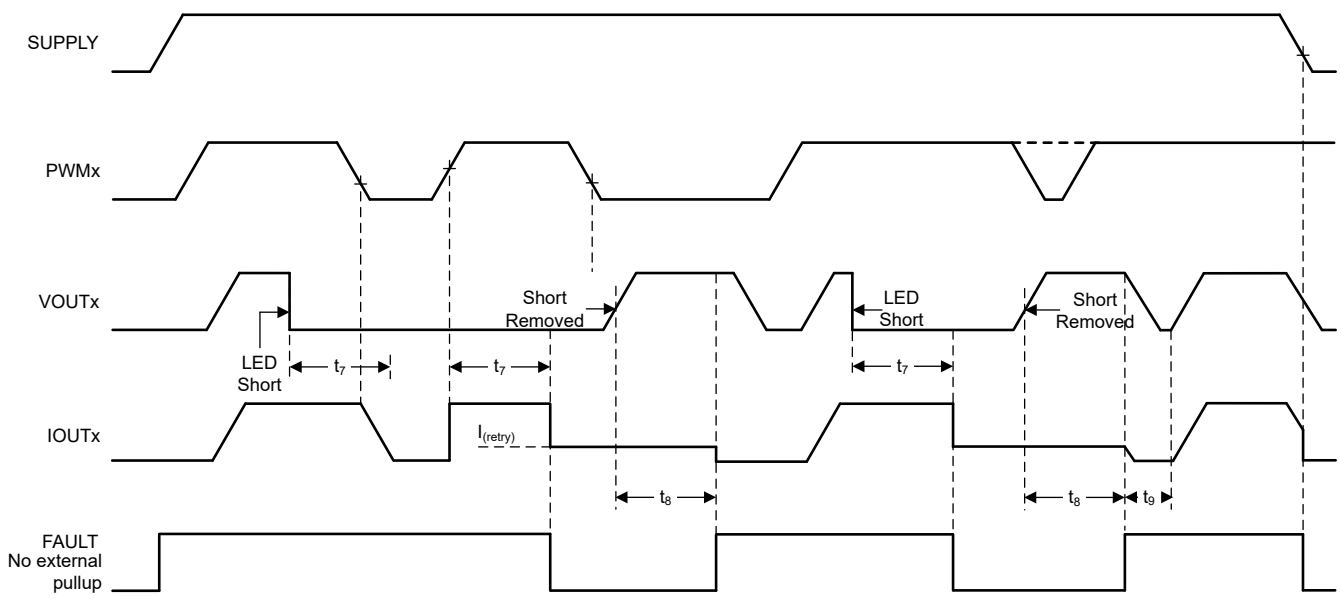

図 7-3. LED Short-to-GND Detection and Recovery Timing Diagram

The detailed information and value of each time period in 図 7-3 is described in *Timing Requirements*.

7.3.7.2 LED Open-Circuit Detection

The TPS92624-Q1 device has LED open-circuit detection. The LED open-circuit detection monitors the output voltage when the current output is enabled. The LED open-circuit detection is only enabled when DIAGEN is HIGH. A short-to-battery fault is also detected and recognized as an LED open-circuit fault.

The TPS92624-Q1 monitors dropout-voltage differences between the IN and OUT pins for each LED channel when PWM is HIGH. The voltage difference $V_{(INx)} – V_{(OUTx)}$ is compared with the internal reference voltage $V_{(OPEN_th_rising)}$ to detect an LED open-circuit incident. If $V_{(OUTx)}$ rises and causes $V_{(INx)} – V_{(OUTx)}$ less than the $V_{(OPEN_th_rising)}$ voltage longer than the deglitch time of $t_{(OPEN_deg)}$, the device asserts an open-circuit fault. After a LED open-circuit failure is detected, the internal constant-current sink pulls down the $\overline{FAULT}$ pin voltage. During the deglitch time period, if $V_{(OUTx)}$ falls and makes $V_{(INx)} – V_{(OUTx)}$ larger than $V_{(OPEN_th_falling)}$, the deglitch timer is reset.

The TPS92624-Q1 shuts down the output current regulation for the error channel after LED open-circuit fault is detected. The device sources a small current $I_{(Retry)}$ from SUPPLY to OUT and RES when DIAGEN input is logic High. After the fault condition is removed, the device resumes normal operation and releases the $\overline{FAULT}$ pin. 図 7-4 illustrates the timing for LED open-circuit detection, protection, retry and recovery.

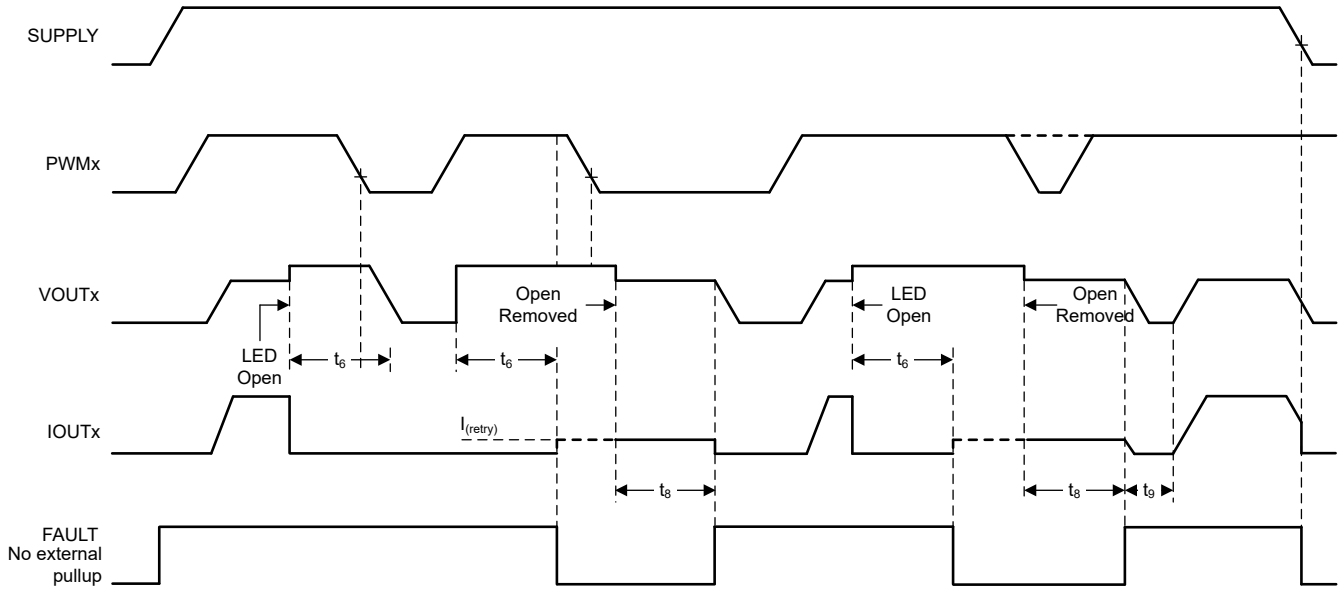

図 7-4. LED Open-Circuit Detection and Recovery Timing Diagram

The detailed information and value of each time period in 図 7-4 is described in *Timing Requirements*.

7.3.7.3 LED Open-Circuit Detection Enable (DIAGEN)

The TPS92624-Q1 device supports the DIAGEN pin with an accurate threshold to disable the LED open-circuit. The DIAGEN pin can be used to enable or disable LED open-circuit detection based on SUPPLY pin voltage sensed by an external resistor divider as illustrated in 図 7-5. When the voltage applied on DIAGEN pin is higher than the threshold $V_{IH(DIAGEN)}$, the device enables LED open-circuit detection. When $V_{(DIAGEN)}$ is lower than the threshold $V_{IL(DIAGEN)}$, the device disables LED open-circuit detection.

Only LED open-circuit detection can be disabled by pulling down the DIAGEN pin. The LED short-to-GND detection and overtemperature protection cannot be turned off by pulling down the DIAGEN pin. The SUPPLY threshold voltage can be calculated by using 式 3.

Copyright © 2022 Texas Instruments Incorporated

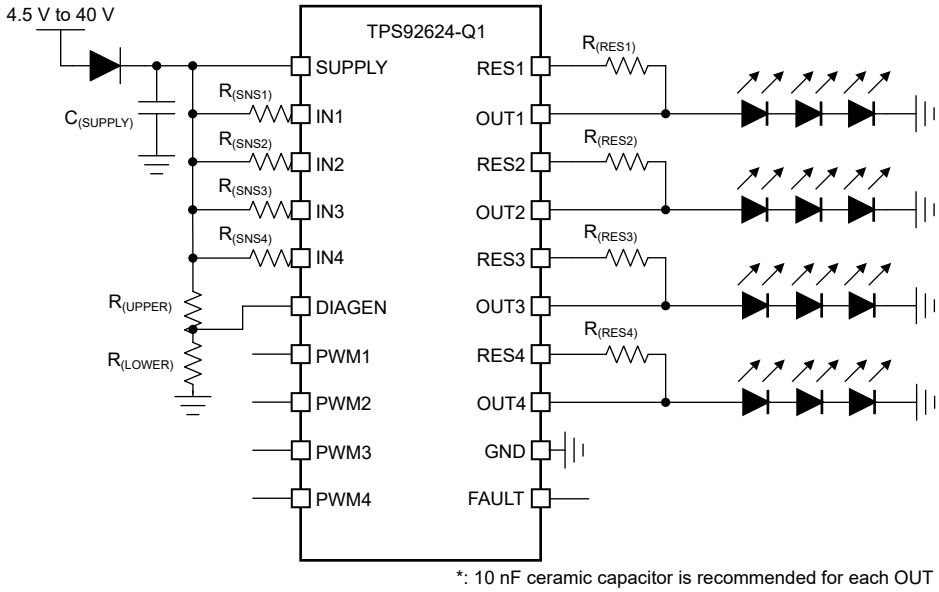

図 7-5. Application Schematic For DIAGEN

$$V_{(SUPPLY_DIAGEN_th_falling)} = V_{IL(DIAGEN)} \times \left(1 + \frac{R_{(UPPER)}}{R_{(LOWER)}}\right) \tag{3}$$

where

- $V_{IL(DIAGEN)}$ = 1.045 V (minimum)

7.3.7.4 Overtemperature Protection

The TPS92624-Q1 device monitors device junction temperature. When the junction temperature reaches thermal shutdown threshold $T_{(TSD)}$, the output shuts down. After the junction temperature falls below $T_{(TSD)}$ – $T_{(TSD_HYS)}$, the device recovers to normal operation. During overtemperature protection, the $\overline{FAULT}$ pin is pulled low.

7.3.7.5 Low Dropout Operation

When the supply voltage drops below LED string total forward voltage plus headroom voltage at required current, the TPS92624-Q1 device operates in low-dropout conditions to deliver current output as close as possible to target value. The actual current output is less than preset value due to insufficient headroom voltage for power transistor. As a result, the voltage across the sense resistor fails to reach the regulation target. The headroom voltage is the summation of $V_{(DROPOUT)}$ and $V_{(CS_REG)}$.

If the TPS92624-Q1 is designed to operate in low-dropout condition, the open-circuit diagnostics must be disabled by pulling the DIAGEN pin voltage lower than $V_{IL(DIAGEN)}$. Otherwise, the TPS92624-Q1 detects an open-circuit fault and reports a fault on the $\overline{FAULT}$ pin. The DIAGEN pin is used to avoid false diagnostics due to low supply voltage.

7.3.8 FAULT Bus Output With One-Fails-All-Fail

During normal operation, The $\overline{FAULT}$ pin of TPS92624-Q1 is weakly pulled up by an internal pullup current source, $I_{(FAULT_pullup)}$. If any fault scenario occurs, the $\overline{FAULT}$ pin is strongly pulled low by the internal pulldown current sink, $I_{(FAULT_pulldown)}$ to report out the fault alarm.

Meanwhile, the TPS92624-Q1 also monitors the $\overline{FAULT}$ pin voltage internally. If the $\overline{FAULT}$ pin of the TPS92624-Q1 is pulled low by external current sink below $V_{IL(FAULT)}$, the current output is turned off even though there is no fault detected on owned outputs. The device does not resume to normal operation until the $\overline{FAULT}$ pin voltage rises above $V_{IH(FAULT)}$.

Based on this feature, the TPS92624-Q1 device is able to construct a FAULT bus by tying $\overline{\text{FAULT}}$ pins from multiple TPS92624-Q1 devices to achieve one-fails-all-fail function as 図 7-6 showing. The lower side TPS92624-Q1 (B) detects any kind of LED fault and pulls low the $\overline{\text{FAULT}}$ pin. The low voltage on $\overline{\text{FAULT}}$ pin is detected by upper side TPS92624-Q1 (A) because the $\overline{\text{FAULT}}$ pins are connected of two devices. The upper side TPS92624-Q1 (A) turns off all output current for each channel as a result. If the $\overline{\text{FAULT}}$ pins of each TPS92624-Q1 are all connected to drive the base of an external PNP transistor as illustrated in 図 7-7, the one-fails–all-fail function is disabled and only the faulty channel device is turned off.

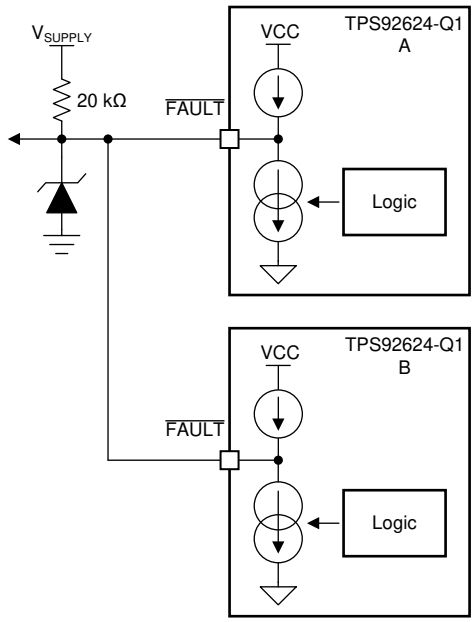

図 7-6. FAULT Bus for One-Fails-All-Fail Application

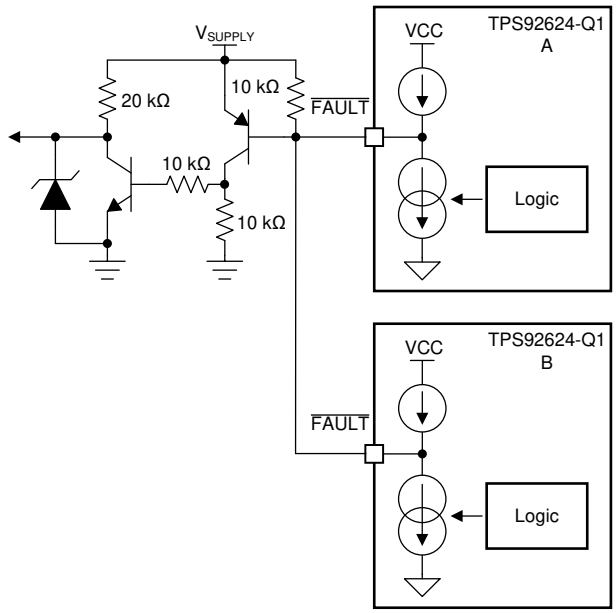

図 7-7. FAULT Bus for One-Fails-Others-On Application

Copyright © 2022 Texas Instruments Incorporated

7.3.9 FAULT Table

表 7-1. Fault Table With DIAGEN = HIGH (Full Function)

FAULT BUS STATUS	FAULT TYPE	DETECTION MECHANISM	CONTROL INPUT	DEGLITCH TIME	FAULT BUS	FAULT HANDLING ROUTINE	FAULT RECOVERY
$\overline{FAULT}$ = H	Open-circuit or short-to-supply	$V_{(IN)} – V_{(OUT)} < V_{(OPEN_th_rising)}$	PWMx = H	$t_{(OPEN_deg)}$	Constant-current pulldown	Device turns failed output off and retries with constant current $I_{(retry)}$, ignoring the PWM input.	Auto recovery
	Short-to-ground	$V_{(OUT)} < V_{(SG_th_falling)}$ OR $V_{(RES)} < V_{(SG_th_falling)}$	PWMx = H	$t_{(SG_deg)}$	Constant-current pulldown	Device turns failed output off and retries with constant current $I_{(retry)}$, ignoring the PWM input.	Auto recovery
	Overtemperature	$T_J > T_{(TSD)}$		$t_{(TSD_deg)}$	Constant-current pulldown	Device turns all output channels off.	Auto recovery
$\overline{FAULT}$ = L	Fault is detected	Device turns all remained channels off and keeps retry on the failed channels. After the $\overline{Fault}$ pin is released, all channels are turned on after $t_{(FAULT_recovery)}$ time.					
	No fault is detected	Device turns all output channels off.					

表 7-2. Fault Table With DIAGEN = LOW (Full Function)

FAULT BUS STATUS	FAULT TYPE	DETECTION MECHANISM	CURRENT OUTPUT	DEGLITCH TIME	FAULT BUS	FAULT HANDLING ROUTINE	FAULT RECOVERY
$\overline{FAULT}$ = H	Open-circuit or short-to-supply	Ignored					
	Short-to-ground	$V_{(OUT)} < V_{(SG_th_falling)}$ OR $V_{(OUT)} < V_{(SG_th_falling)}$	PWMx = H	$t_{(SG_deg)}$	Constant-current pulldown	Device turns output off and retries with constant current $I_{(retry)}$, ignoring the PWM input.	Auto recovery
	Overtemperature	$T_J > T_{(TSD)}$		$t_{(TSD_deg)}$	Constant-current pulldown	Device turns all output channels off.	Auto recovery
$\overline{FAULT}$ = L	Fault is detected	Device turns all remained channels off and keeps retry on the failed channels. After the $\overline{Fault}$ pin is released, all channels are turned on after $t_{(FAULT_recovery)}$ time.					
	No fault is detected	Device turns all output channels off.					

7.3.10 LED Fault Summary

表 7-3. LED Connection Fault Summary

Case 1	Case 2	Case 3	Case 4
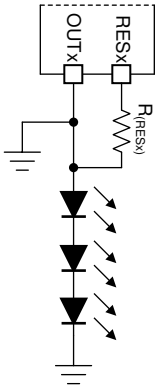	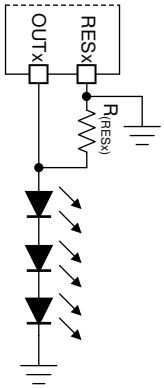	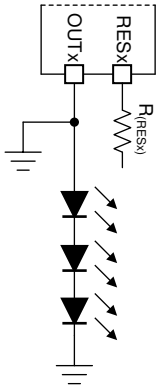	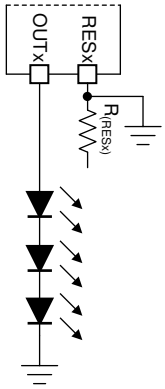
LED Short-to-GND Fault	LED Short-to-GND Fault	LED Short-to-GND Fault	LED Short-to-GND Fault
Case 5	**Case 6**	**Case 7**	**Case 8**
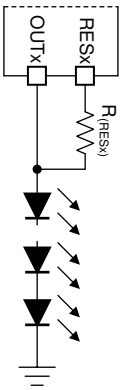	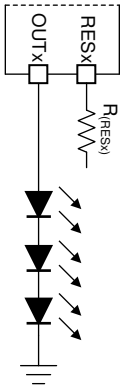	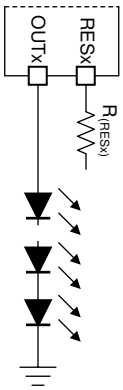	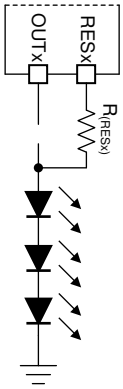
LED Open Fault	No Fault	LED Open Fault	LED Open Fault
Case 9	**Case 10**	**Case 11**	**Case 12**
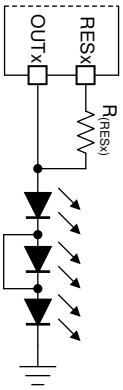	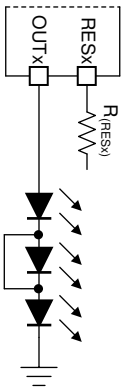	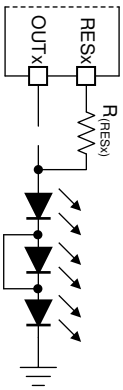	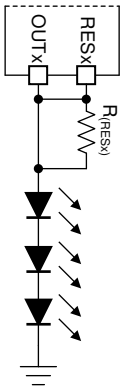
No Fault	No Fault	LED Open Fault	No Fault

Copyright © 2022 Texas Instruments Incorporated

7.3.11 IO Pins Inner Connection

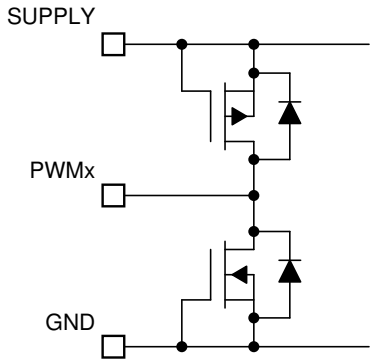

図 7-8. PWMx Pins

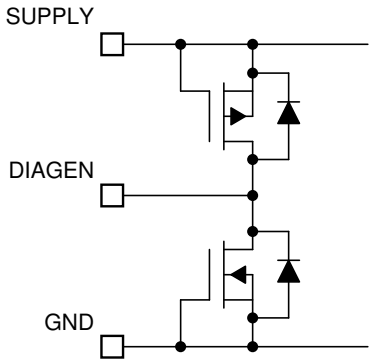

図 7-9. DIAGEN Pin

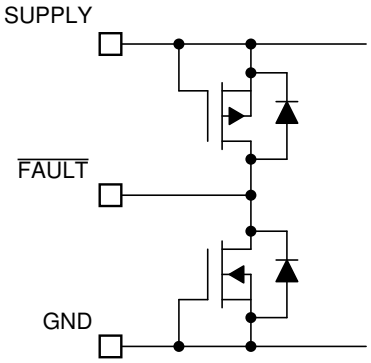

図 7-10. $\overline{\text{FAULT}}$ Pin

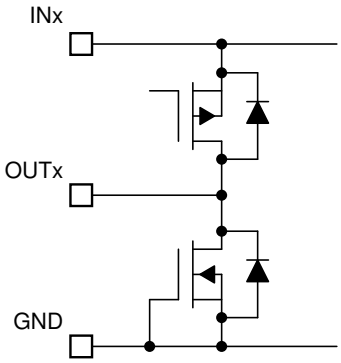

図 7-11. OUTx Pins

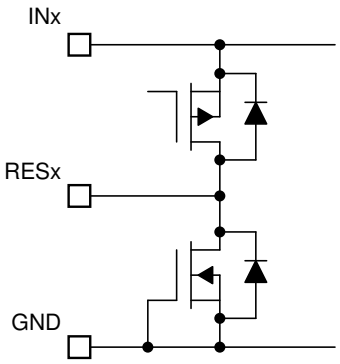

図 7-12. RESx Pins

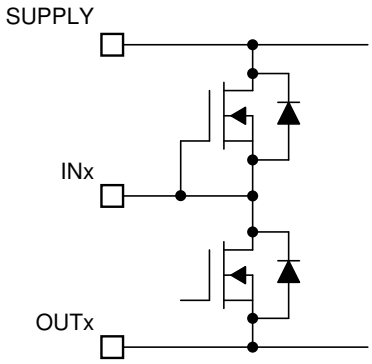

図 7-13. INx Pins

7.4 Device Functional Modes

7.4.1 Undervoltage Lockout, $V_{(SUPPLY)} < V_{(POR_rising)}$

When the device is in undervoltage lockout status, the TPS92624-Q1 device disables all functions until the supply rises above the $V_{(POR_rising)}$ threshold.

7.4.2 Normal Operation $V_{(SUPPLY)} \geq 4.5$ V

The device drives an LED string in normal operation. With enough voltage drop across SUPPLY and OUT, the device is able to drive the output in constant-current mode.

7.4.3 Low-Voltage Dropout Operation

When the device drives an LED string in low-dropout operation, if the $V_{(DROPOUT)}$ is less than the open-circuit detection threshold, the device can report a false open-circuit fault. TI recommends only enabling the open-circuit detection when the voltage across the IN and OUTx is higher than the maximum voltage of LED open rising threshold to avoid a false open-circuit detection.

7.4.4 Fault Mode

When the TPS92624-Q1 detects a fault, the device tries to pull down the $\overline{FAULT}$ pin with a constant current. If the FAULT bus is pulled down, the device switches to fault mode and consumes a fault current of $I_{(FAULT)}$.

Copyright © 2022 Texas Instruments Incorporated

8 Application and Implementation

Note

以下のアプリケーション情報は、TI の製品仕様に含まれるものではなく、TI ではその正確性または完全性を保証いたしません。個々の目的に対する製品の適合性については、お客様の責任で判断していただくことになります。お客様は自身の設計実装を検証しテストすることで、システムの機能を確認する必要があります。

8.1 Application Information

In automotive lighting applications, thermal performance and LED diagnostics are always design challenges for linear LED drivers.

The TPS92624-Q1 device is capable of detecting LED open-circuit and LED short-circuits. To increase current driving capability, the TPS92624-Q1 device supports using an external shunt resistor to help dissipate heat as the following section, *Thermal Sharing Resistor (OUTx and RESx)*, describes. This method provides a low-cost solution of using external resistors to minimize thermal accumulation on the device itself due to large voltage difference between input voltage and LED string forward voltage, while still keeping high accuracy of the total current output.

8.2 Typical Applications

8.2.1 BCM Controlled Rear Lamp With One-Fails-All-Fail Setup

The multiple TPS92624-Q1 devices are capable of driving different functions for automotive rear lamp including stop, turn indicator, tail, fog, reverse and center-high-mounted-stop-lamp. The one-fails-all-fail single lamp mode can be easily achieved by FAULT bus by shorting the $\overline{\text{FAULT}}$ pins.

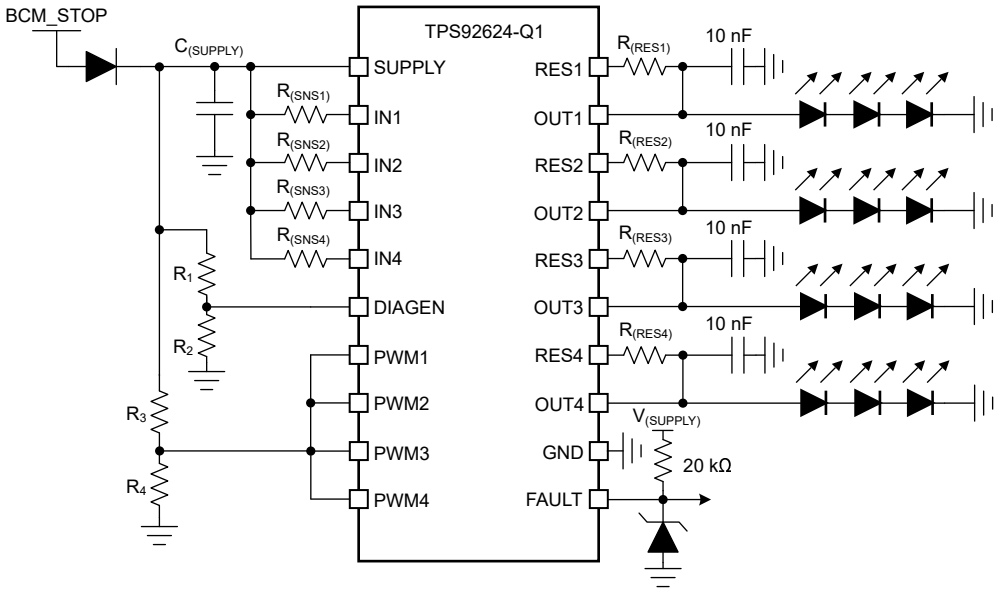

図 8-1. Typical Application Schematic

8.2.1.1 Design Requirements

Input voltage range is from 9 V to 16 V, and a total 12 strings with 3 LEDs in each string are required to achieve stop function. The LED maximum forward voltage, V_{F_MAX} is 2.5 V for each LED, while the minimum forward voltage, V_{F_MIN} is 1.9 V. The current requirement for each LED, $I_{(LED)}$ is 130 mA. The LED brightness and ON and OFF control is manipulated by body control module (BCM) directly by connecting and disconnecting the power supply to the LED load.

8.2.1.2 Detailed Design Procedure

Step 1: Determine the current sensing resistor, $\mathbf{R_{(SNSx)}}$, by using 式 4.

$$R_{(SNSx)} = \frac{V_{(CS_REG)}}{I_{(OUTx_Tot)}} \tag{4}$$

where

- $V_{(CS_REG)}$ = 150 mV (typical)
- $I_{(OUTx_Tot)}$ = 130 mA

According to design requirements, output current for each channel is same so that the $R_{(SNS1)}$ = $R_{(SNS2)}$ = $R_{(SNS3)}$ = $R_{(SNS4)}$ =1.15 Ω. Two resistors in parallel can be used to achieve equivalent resistance when sense resistor is not a standard decade resistance value.

Step 2: Design the current distribution between $I_{(OUTx)}$ and $I_{(RESx)}$, and calculate the current sharing resistor, $\mathbf{R_{(RESx)}}$, by using 式 5. The $R_{(RESx)}$ value actually decides the current distribution for $I_{(OUTx)}$ path and $I_{(RESx)}$ path. TI recommends the current sharing resistor $R_{(RESx)}$ to consume 50% of the total current at typical supply operating voltage.

$$R_{(RESx)} = \frac{V_{(SUPPLY)} - V_{(OUTx)}}{I_{(OUTx_Tot)} \times 0.5} \tag{5}$$

where

- $V_{(SUPPLY)}$ = 12 V (typical)
- $I_{(OUTx_Tot)}$ = 130 mA

The calculated result for $R_{(RESx)}$ resistor value including $R_{(RES1)}$, $R_{(RES2)}$,$R_{(RES3)}$ and $R_{(RES4)}$ is 85.4 Ω when $V_{(OUTx)}$ is typical 3 × 2.15 V = 6.45 V.

Step 3: Design the threshold voltage of SUPPLY to enable the LED open-circuit diagnostics, and calculate voltage divider resistor value for **R1** and **R2** on DIAGEN pin.

The maximum forward voltage of LED-string is 3 × 2.5 V = 7.5 V. To avoid the open-circuit fault reported in low-dropout operation conditions, additional headroom between SUPPLY and OUTx must be considered. TheTPS92624-Q1 device must disable open-circuit detection when the supply voltage is below LED-string maximum forward voltage plus $V_{(OPEN_th_rising)}$ and $V_{(CS_REG)}$. The voltage divider resistor, R1 and R2 value can be calculated by 式 6.

$$R_1 = \left(\frac{V_{(OPEN_th_rising)} + V_{(CS_REG)} + V_{(OUTx)}}{V_{IL(DIAGEN)}} - 1 \right) \times R_2 \tag{6}$$

where

- $V_{(OPEN_th_rising)}$ = 420 mV (maximum)
- $V_{(CS_REG)}$ = 156 mV
- $V_{IL(DIAGEN)}$ = 1.045 V (minimum)
- R_2 = 10 kΩ (recommended)

The calculated result for R1 is 67.3 kΩ when $V_{(OUTx)}$ maximum voltage is 7.5 V and $V_{(CS_REG)}$ is 156 mV.

Step 4: Design the threshold voltage of SUPPLY to turn on and off each channel of LED, and calculate voltage divider resistor value for **R3** and **R4** on PWM input pin.

Copyright © 2022 Texas Instruments Incorporated

The minimum forward voltage of LED string is 3 × 1.9 V = 5.7 V. To make sure the current output on each of LED-string is normal, each LED-string must be turned off when SUPPLY voltage is lower than LED minimum required forward voltage plus dropout voltage between INx to OUTx and $V_{(CS_REG)}$. The voltage divider resistor, R3 and R4 value can be calculated by 式 7.

$$R_3 = \left(\frac{V_{(DROPOUT)} + V_{(CS_REG)} + V_{(OUTx)}}{V_{IH(PWM)}} - 1 \right) \times R_4 \tag{7}$$

where

- $V_{(DROPOUT)}$ = 300 mV (typical)
- $V_{(CS_REG)}$ = 156 mV (maximum)
- $V_{IH(PWM)}$ = 1.26 V (maximum)
- R_4 = 10 kΩ (recommended)

The calculated result for R3 is 38.9 kΩ when $V_{(OUTx)}$ minimum voltage is 5.7 V and $V_{(CS_REG)}$ is 156 mV.

8.2.1.3 Application Curves

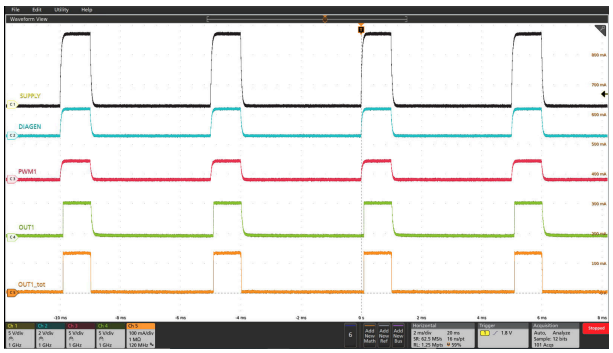

Ch1 = $V_{(SUPPLY)}$ Ch2 = $V_{(DIAGEN)}$ Ch3 = $V_{(PWM1)}$
Ch4 = $V_{(OUT1)}$ Ch5 = $I_{(OUT_Tot)}$

図 8-2. 200-Hz Supply Dimming 20% Brightness

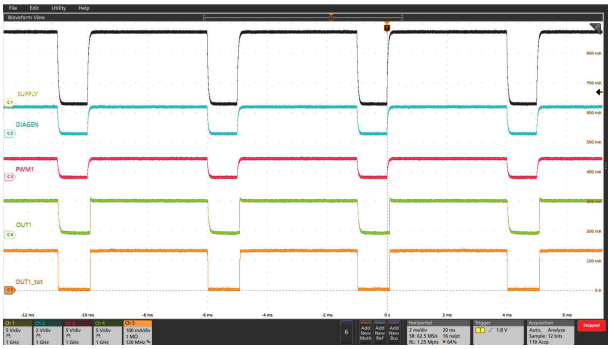

Ch1 = $V_{(SUPPLY)}$ Ch2 = $V_{(DIAGEN)}$ Ch3 = $V_{(PWM1)}$
Ch4 = $V_{(OUT1)}$ Ch5 = $I_{(OUT_Tot)}$

図 8-3. 200-Hz Supply Dimming 80% Brightness

8.2.2 Independent PWM Controlled Rear Lamp By MCU

The TPS92624-Q1 device is able to drive the each current output channel independently by PWM input at PWM1, PWM2 ,PWM3 and PWM4 pins. The PWM input signals comes from MCU to achieve sequential turn indicator feature.

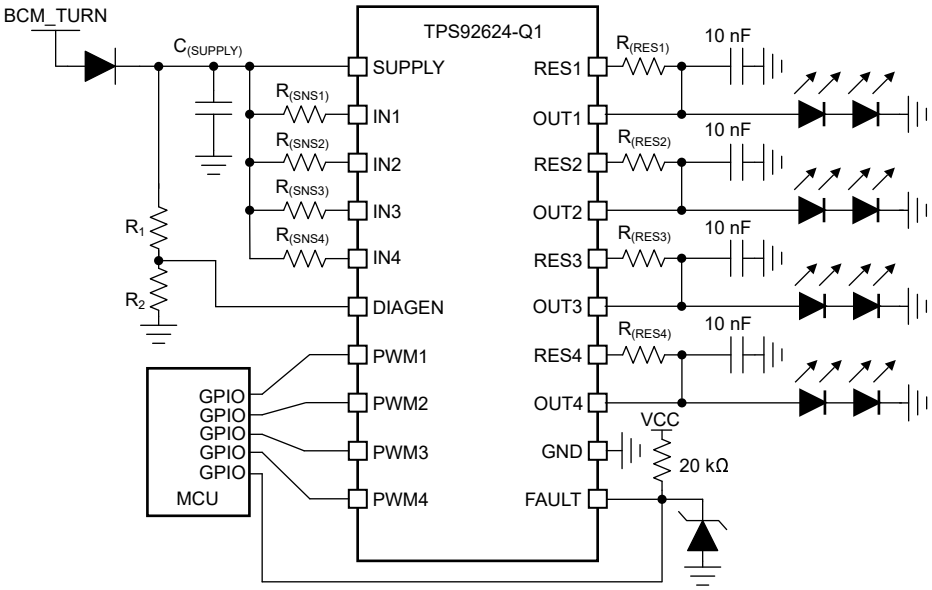

図 8-4. Typical Application Schematic

8.2.2.1 Design Requirements

Input voltage range is from 9 V to 16 V, and a total 9 strings with 2 LEDs in each string are required to achieve turn indicator function. The LED maximum forward voltage, V_{F_MAX} is 2.5 V for each LED, however the minimum forward voltage, V_{F_MIN} is 1.9 V. Each LED current is 130 mA and each output channel is independent controlled by MCU through individual GPIO.

8.2.2.2 Detailed Design Procedure

Step 1: Determine the current sensing resistor, $\mathbf{R_{(SNSx)}}$ by using 式 8.

$$R_{(SNSx)} = \frac{V_{(CS_REG)}}{I_{(OUTx_Tot)}} \tag{8}$$

where

- $V_{(CS_REG)}$ = 150 mV (typical)
- $I_{(OUTx_Tot)}$ = 130 mA

According to design requirements, output current for each channel is same so that the calculated $R_{(SNS1)}$ = $R_{(SNS2)}$ = $R_{(SNS3)}$= $R_{(SNS4)}$=1.15 Ω.

Step 2: Design the current distribution between $I_{(OUTx)}$ and $I_{(RESx)}$, and calculate the current sharing resistor, $\mathbf{R_{(RESx)}}$, by using 式 9. The $R_{(RESx)}$ value actually decides the current distribution for $I_{(OUTx)}$ path and $I_{(RESx)}$ path, basic principle is to design the $R_{(RESx)}$ to consume appropriate 50% total power dissipation at typical supply operating voltage.

$$R_{(RESx)} = \frac{V_{(SUPPLY)} - V_{(OUTx)}}{I_{(OUTx_Tot)} \times 0.5} \tag{9}$$

where

- $V_{(SUPPLY)}$ = 12 V (typical)
- $I_{(OUTx_Tot)}$ = 130 mA (maximum)

Copyright © 2022 Texas Instruments Incorporated

The calculated result for $R_{(RESx)}$ resistor value including $R_{(RES1)}$, $R_{(RES2)}$,$R_{(RES3)}$ and $R_{(RES4)}$ is 117 Ω when $V_{(OUTx)}$ is typical 2 × 2.2 V = 4.4 V.

Step 3: Design the threshold voltage of SUPPLY to enable the LED open-circuit, and calculate voltage divider resistor value for **R1** and **R2** on DIAGEN pin.

The maximum forward voltage of LED-string is 2 × 2.5 V = 5 V. To avoid the open-circuit fault reported in low-dropout operation conditions, additional headroom between SUPPLY and OUTx must be considered. TheTPS92624-Q1 device must disable open-circuit detection when the supply voltage is below LED-string maximum forward voltage plus $V_{(OPEN_th_rising)}$ and $V_{(CS_REG)}$. The voltage divider resistor, R1 and R2 value can be calculated by 式 10.

$$R_1 = \left(\frac{V_{(OPEN_th_rising)} + V_{(CS_REG)} + V_{(OUTx)}}{V_{IL(DIAGEN)}} - 1 \right) \times R_2 \tag{10}$$

where

- $V_{(OPEN_th_rising)}$ = 420 mV (maximum)
- $V_{(CS_REG)}$ = 156 mV (maximum)
- $V_{IL(DIAGEN)}$ = 1.045 V (minimum)
- R_2 = 10 kΩ (recommended)

The calculated result for R1 is 43.4 kΩ when $V_{(OUTx)}$ maximum voltage is 5 V and $V_{(CS_REG)}$ is 156 mV.

8.2.2.3 Application Curves

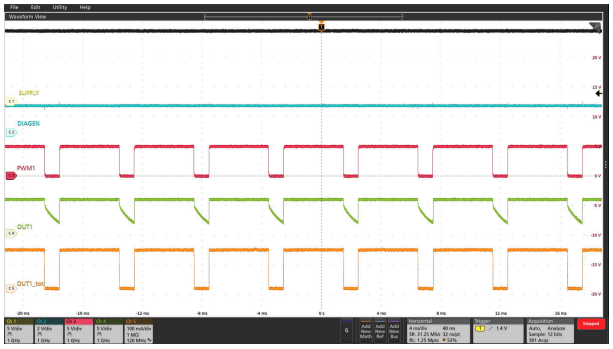

Ch1 = $V_{(SUPPLY)}$ Ch2 = $V_{(DIAGEN)}$ Ch3 = $V_{(PWM1)}$
Ch4 = $V_{(OUT1)}$ Ch5 = $I_{(OUT_Tot)}$

図 8-5. 200-Hz PWM Dimming at 80% Duty Cycle

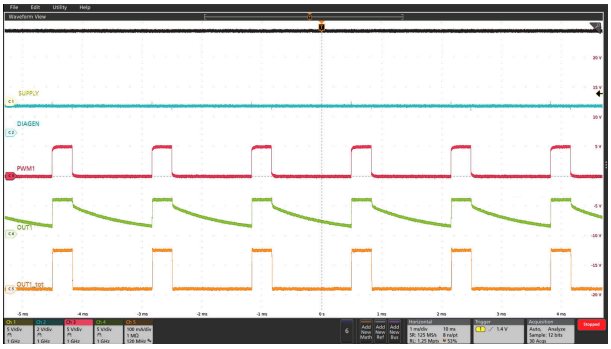

Ch1 = $V_{(SUPPLY)}$ Ch2 = $V_{(DIAGEN)}$ Ch3 = $V_{(PWM1)}$
Ch4 = $V_{(OUT1)}$ Ch5 = $I_{(OUT_Tot)}$

図 8-6. 600-Hz PWM Dimming at 20% Duty Cycle

9 Power Supply Recommendations

The TPS92624-Q1 is designed to operate from an automobile electrical power system within the range specified in *Power Supply*. The $V_{(SUPPLY)}$ input must be protected from reverse voltage and voltage dump condition over 40 V. The impedance of the input supply rail must be low enough that the input current transient does not cause drop below LED string required forward voltage. If the input supply is connected with long wires, additional bulk capacitance can be required in addition to normal input capacitor.

Copyright © 2022 Texas Instruments Incorporated

10 Layout

10.1 Layout Guidelines

Thermal dissipation is the primary consideration for TPS92624-Q1 layout.

- TI recommends large thermal dissipation area in both top and bottom layers of PCB. The copper pouring area in same layer with TPS92624-Q1 footprint must directly cover the thermal pad land of the device with wide connection as much as possible. The copper pouring in opposite PCB layer or inner layers must be connected to thermal pad directly through multiple thermal vias.
- TI recommends to place $R_{(RESx)}$ resistors away from the TPS92624-Q1 device with more than 20-mm distance, because $R_{(RESx)}$ resistors are dissipating some amount of the power as well as the TPS92624-Q1. Place two heat source components apart to reduce the thermal accumulation concentrated at small PCB area. The large copper pouring area is also required surrounding the $R_{(RESx)}$ resistors for helping thermal dissipating.

The noise immunity is the secondary consideration for TPS92624-Q1 layout.

- TI recommends to place the noise decoupling capacitors for SUPPLY pin as close as possible to the pins.
- TI recommends to place the $R_{(SNSx)}$ resistor as close as possible to the INx pins with the shortest PCB track to SUPPLY pin.

10.2 Layout Example

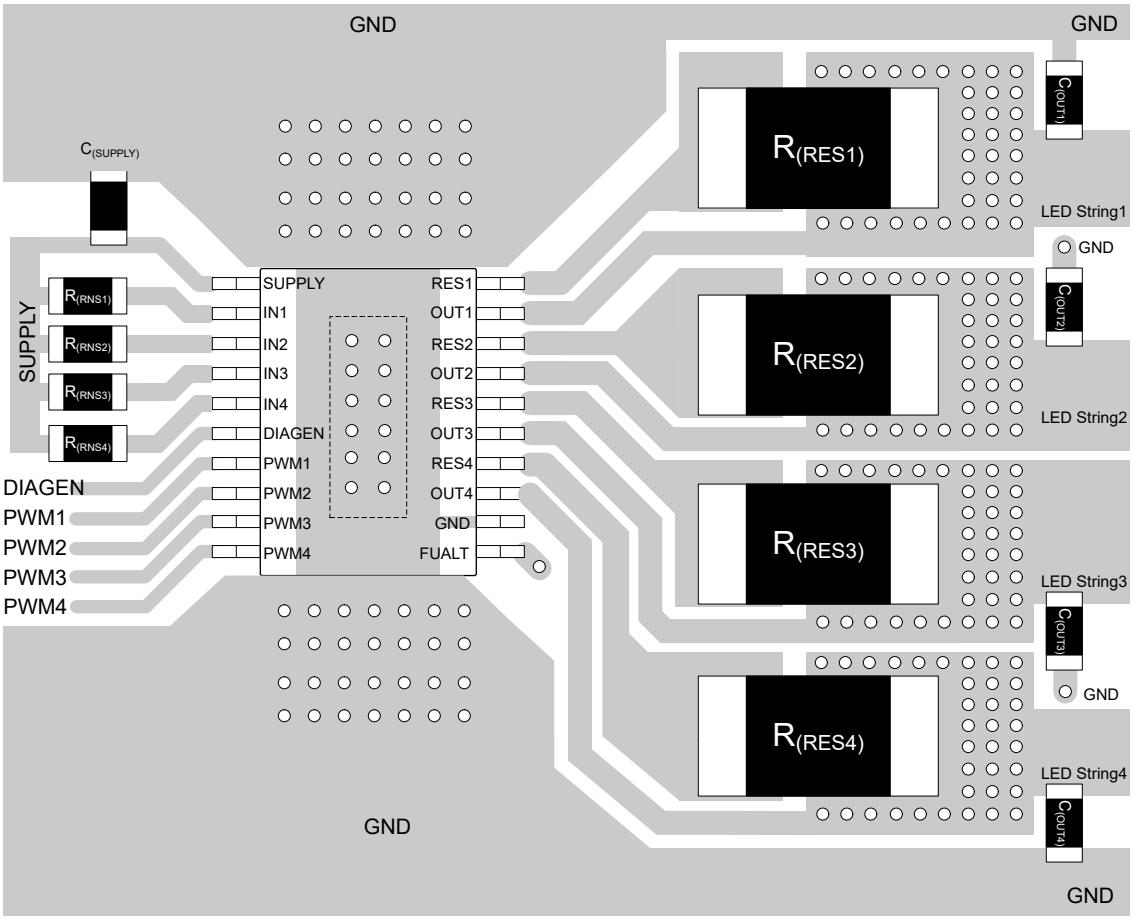

図 10-1. TPS92624-Q1 Example Layout Diagram

11 Device and Documentation Support

11.1 Receiving Notification of Documentation Updates

To receive notification of documentation updates, navigate to the device product folder on ti.com. Click on *Subscribe to updates* to register and receive a weekly digest of any product information that has changed. For change details, review the revision history included in any revised document.

11.2 サポート・リソース

TI E2E™ サポート・フォーラムは、エンジニアが検証済みの回答と設計に関するヒントをエキスパートから迅速かつ直接得ることができる場所です。既存の回答を検索したり、独自の質問をしたりすることで、設計で必要な支援を迅速に得ることができます。

リンクされているコンテンツは、該当する貢献者により、現状のまま提供されるものです。これらは TI の仕様を構成するものではなく、必ずしも TI の見解を反映したものではありません。TI の使用条件を参照してください。

11.3 Trademarks

PowerPAD™ and TI E2E™ are trademarks of Texas Instruments.
すべての商標は、それぞれの所有者に帰属します。

11.4 Electrostatic Discharge Caution

This integrated circuit can be damaged by ESD. Texas Instruments recommends that all integrated circuits be handled with appropriate precautions. Failure to observe proper handling and installation procedures can cause damage.

ESD damage can range from subtle performance degradation to complete device failure. Precision integrated circuits may be more susceptible to damage because very small parametric changes could cause the device not to meet its published specifications.

11.5 Glossary

TI Glossary	This glossary lists and explains terms, acronyms, and definitions.

Copyright © 2022 Texas Instruments Incorporated

12 Mechanical, Packaging, and Orderable Information

The following pages include mechanical, packaging, and orderable information. This information is the most current data available for the designated devices. This data is subject to change without notice and revision of this document. For browser-based versions of this data sheet, refer to the left-hand navigation.

PACKAGING INFORMATION

Orderable part number	Status (1)	Material type (2)	Package | Pins	Package qty | Carrier	RoHS (3)	Lead finish/ Ball material (4)	MSL rating/ Peak reflow (5)	Op temp (°C)	Part marking (6)
TPS92624QPWPRQ1	Active	Production	HTSSOP (PWP) | 20	2000 | LARGE T&R	Yes	NIPDAU	Level-3-260C-168 HR	-40 to 125	92624Q
TPS92624QPWPRQ1.A	Active	Production	HTSSOP (PWP) | 20	2000 | LARGE T&R	Yes	NIPDAU	Level-3-260C-168 HR	-40 to 125	92624Q

(1) **Status:** For more details on status, see our product life cycle.

(2) **Material type:** When designated, preproduction parts are prototypes/experimental devices, and are not yet approved or released for full production. Testing and final process, including without limitation quality assurance, reliability performance testing, and/or process qualification, may not yet be complete, and this item is subject to further changes or possible discontinuation. If available for ordering, purchases will be subject to an additional waiver at checkout, and are intended for early internal evaluation purposes only. These items are sold without warranties of any kind.

(3) **RoHS values:** Yes, No, RoHS Exempt. See the TI RoHS Statement for additional information and value definition.

(4) **Lead finish/Ball material:** Parts may have multiple material finish options. Finish options are separated by a vertical ruled line. Lead finish/Ball material values may wrap to two lines if the finish value exceeds the maximum column width.

(5) **MSL rating/Peak reflow:** The moisture sensitivity level ratings and peak solder (reflow) temperatures. In the event that a part has multiple moisture sensitivity ratings, only the lowest level per JEDEC standards is shown. Refer to the shipping label for the actual reflow temperature that will be used to mount the part to the printed circuit board.

(6) **Part marking:** There may be an additional marking, which relates to the logo, the lot trace code information, or the environmental category of the part.

Multiple part markings will be inside parentheses. Only one part marking contained in parentheses and separated by a "~" will appear on a part. If a line is indented then it is a continuation of the previous line and the two combined represent the entire part marking for that device.

Important Information and Disclaimer: The information provided on this page represents TI's knowledge and belief as of the date that it is provided. TI bases its knowledge and belief on information provided by third parties, and makes no representation or warranty as to the accuracy of such information. Efforts are underway to better integrate information from third parties. TI has taken and continues to take reasonable steps to provide representative and accurate information but may not have conducted destructive testing or chemical analysis on incoming materials and chemicals. TI and TI suppliers consider certain information to be proprietary, and thus CAS numbers and other limited information may not be available for release.

In no event shall TI's liability arising out of such information exceed the total purchase price of the TI part(s) at issue in this document sold by TI to Customer on an annual basis.

GENERIC PACKAGE VIEW

PWP 20

HTSSOP - 1.2 mm max height

6.5 x 4.4, 0.65 mm pitch

SMALL OUTLINE PACKAGE

This image is a representation of the package family, actual package may vary.
Refer to the product data sheet for package details.

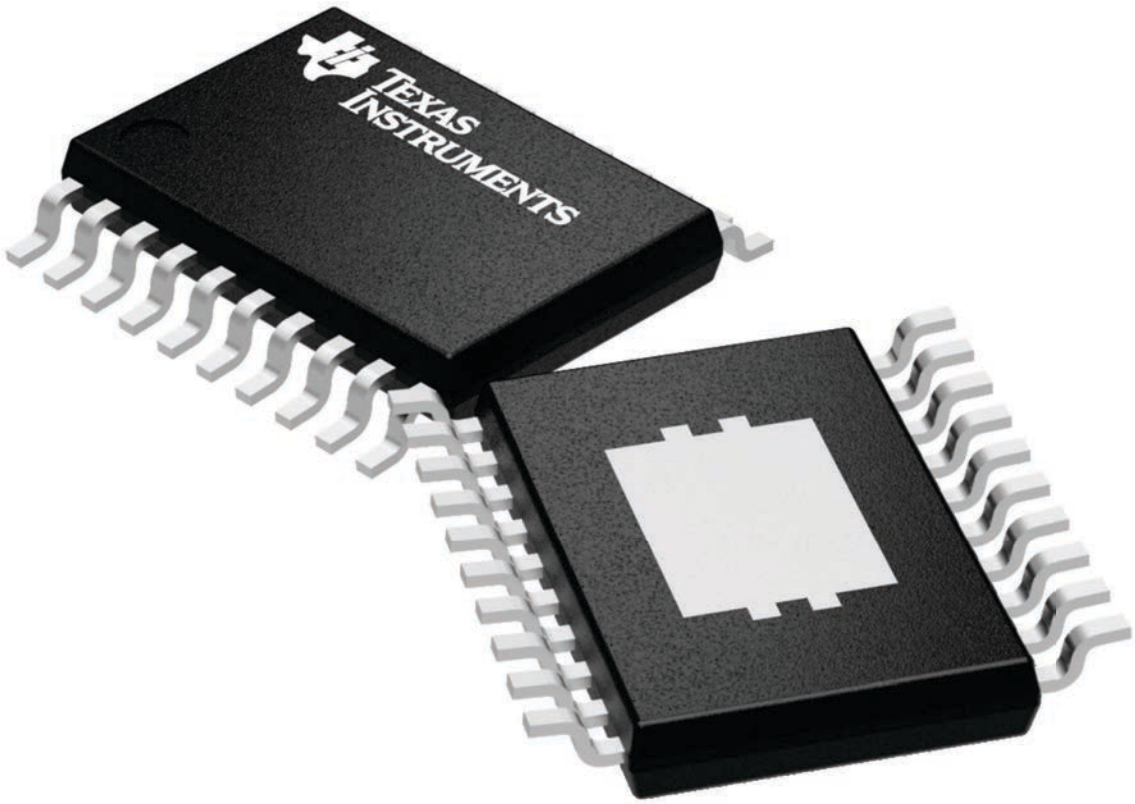

4224669/A

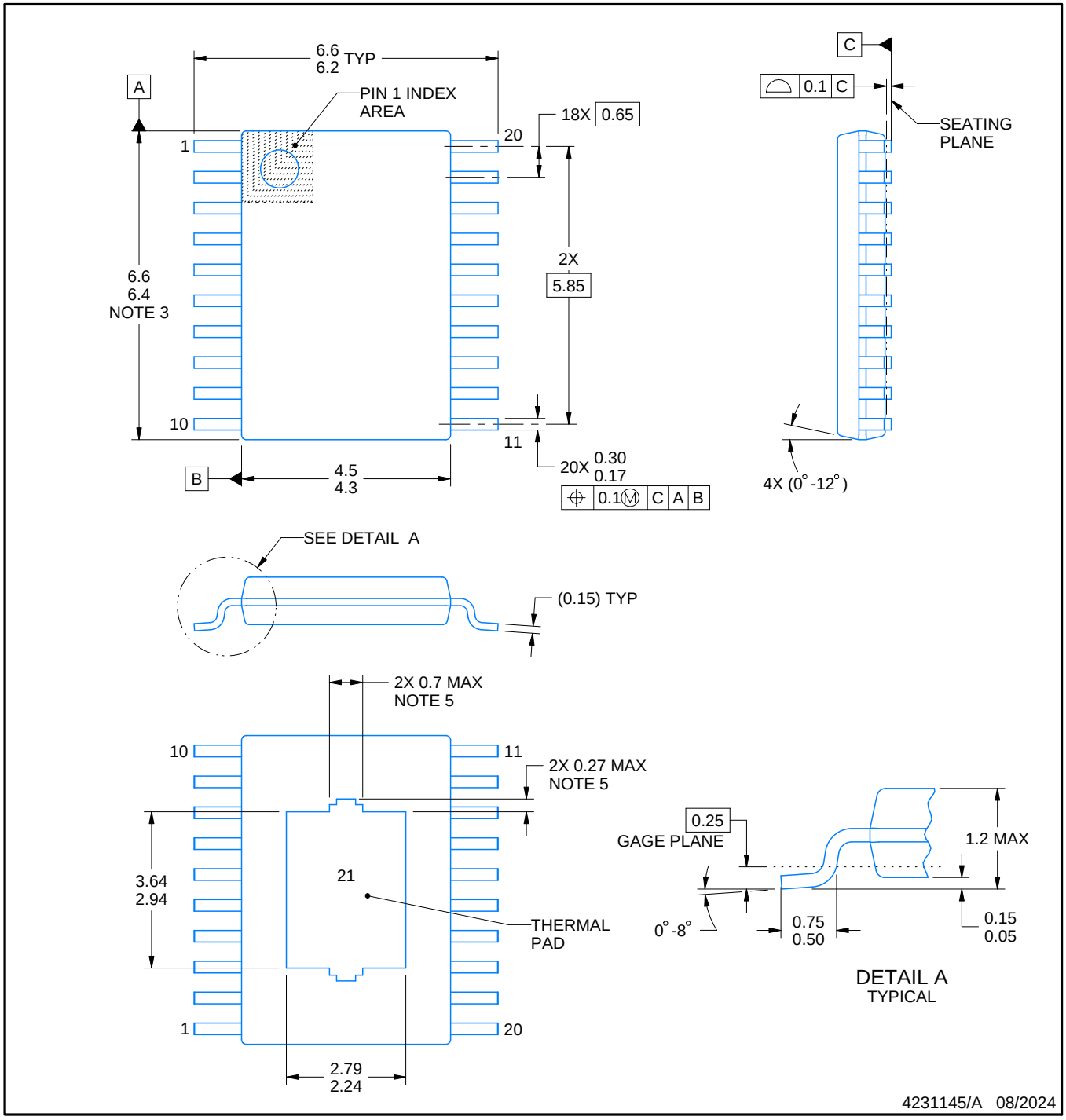

PowerPAD is a trademark of Texas Instruments.

NOTES:

1. All linear dimensions are in millimeters. Any dimensions in parenthesis are for reference only. Dimensioning and tolerancing per ASME Y14.5M.
2. This drawing is subject to change without notice.
3. This dimension does not include mold flash, protrusions, or gate burrs. Mold flash, protrusions, or gate burrs shall not exceed 0.15 mm per side.
4. Reference JEDEC registration MO-153.
5. Features may differ or may not be present.

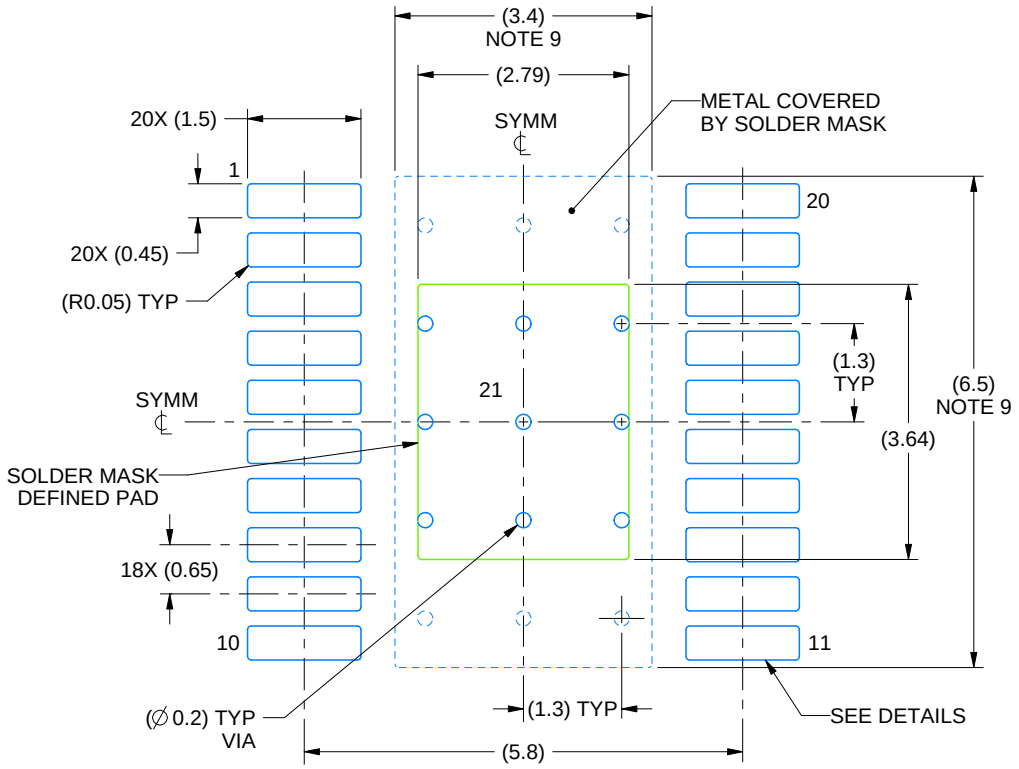

LAND PATTERN EXAMPLE
EXPOSED METAL SHOWN
SCALE: 10X

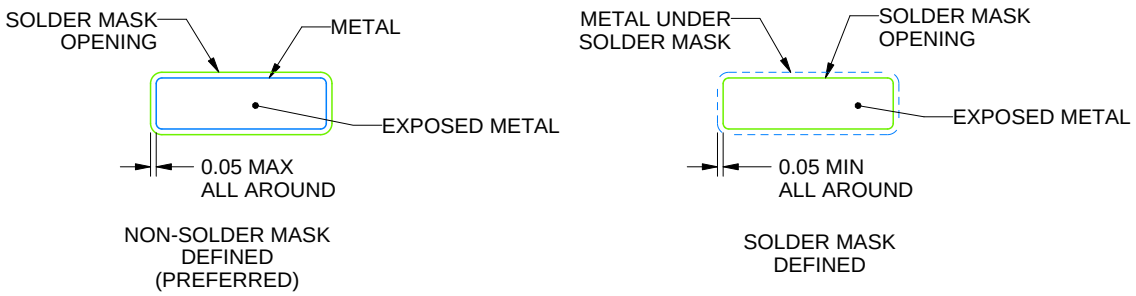

SOLDER MASK DETAILS

4231145/A 08/2024

NOTES: (continued)

6. Publication IPC-7351 may have alternate designs.
7. Solder mask tolerances between and around signal pads can vary based on board fabrication site.
8. This package is designed to be soldered to a thermal pad on the board. For more information, see Texas Instruments literature numbers SLMA002 (www.ti.com/lit/slma002) and SLMA004 (www.ti.com/lit/slma004).
9. Size of metal pad may vary due to creepage requirement.
10. Vias are optional depending on application, refer to device data sheet. It is recommended that vias under paste be filled, plugged or tented.

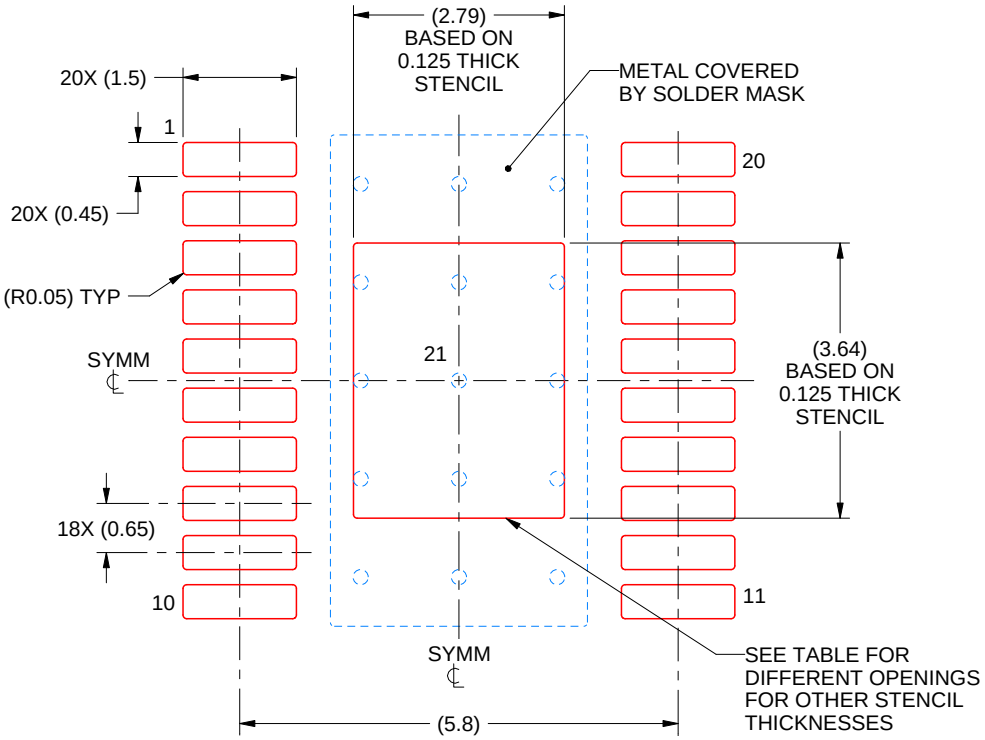

SOLDER PASTE EXAMPLE
BASED ON 0.125 mm THICK STENCIL
SCALE: 10X

STENCIL THICKNESS	SOLDER STENCIL OPENING
0.1	3.12 X 4.07
0.125	2.79 X 3.64 (SHOWN)
0.15	2.55 X 3.32
0.175	2.36 X 3.08

4231145/A 08/2024

NOTES: (continued)

11. Laser cutting apertures with trapezoidal walls and rounded corners may offer better paste release. IPC-7525 may have alternate design recommendations.
12. Board assembly site may have different recommendations for stencil design.

重要なお知らせと免責事項

TI は、技術データと信頼性データ (データシートを含みます)、設計リソース (リファレンス デザインを含みます)、アプリケーションや設計に関する各種アドバイス、Web ツール、安全性情報、その他のリソースを、欠陥が存在する可能性のある「現状のまま」提供しており、商品性および特定目的に対する適合性の黙示保証、第三者の知的財産権の非侵害保証を含むいかなる保証も、明示的または黙示的にかかわらず拒否します。

これらのリソースは、TI 製品を使用する設計の経験を積んだ開発者への提供を意図したものです。(1) お客様のアプリケーションに適した TI 製品の選定、(2) お客様のアプリケーションの設計、検証、試験、(3) お客様のアプリケーションに該当する各種規格や、その他のあらゆる安全性、セキュリティ、規制、または他の要件への確実な適合に関する責任を、お客様のみが単独で負うものとします。

上記の各種リソースは、予告なく変更される可能性があります。これらのリソースは、リソースで説明されている TI 製品を使用するアプリケーションの開発の目的でのみ、TI はその使用をお客様に許諾します。これらのリソースに関して、他の目的で複製することや掲載することは禁止されています。TI や第三者の知的財産権のライセンスが付与されている訳ではありません。お客様は、これらのリソースを自身で使用した結果発生するあらゆる申し立て、損害、費用、損失、責任について、TI およびその代理人を完全に補償するものとし、TI は一切の責任を拒否します。

TI の製品は、 TI の販売条件 、 TI の総合的な品質ガイドライン 、 ti.com または TI 製品などに関連して提供される他の適用条件に従い提供されます。TI がこれらのリソースを提供することは、適用される TI の保証または他の保証の放棄の拡大や変更を意味するものではありません。 TI がカスタム、またはカスタマー仕様として明示的に指定していない限り、TI の製品は標準的なカタログに掲載される汎用機器です。

お客様がいかなる追加条項または代替条項を提案する場合も、TI はそれらに異議を唱え、拒否します。

Copyright © 2025, Texas Instruments Incorporated

最終更新日：2025 年 10 月