TS5A2066 デュアル・チャネル、10Ω SPSTアナログ・スイッチ

1 特長

- 低いオン抵抗(10Ω)
- 制御入力は5V許容
- 低い電荷注入
- 非常に優れたオン抵抗マッチング
- 低い全高調波歪(THD)
- 1.65V～5.5Vの単電源で動作
- JESD 78、Class II準拠で100mA超のラッチアップ性能
- ESD性能はJESD 22に準拠しテスト済み
  - 人体モデルで2000V (A114-B、クラスII)
  - 荷電デバイス・モデルで1000V (C101)

2 アプリケーション

- サンプル・アンド・ホールド回路
- バッテリ駆動の機器
- オーディオおよびビデオ信号のルーティング
- 通信用回路
- 携帯電話
- 低電圧のデータ収集システム
- 携帯情報端末

3 概要

TS5A2066デバイスはデュアル単極単投(SPST)アナログ・スイッチで、1.65V～5.5Vで動作するよう設計されています。このデバイスはデジタルとアナログの両方の信号を処理でき、V_{CC}までの信号をどちらの方向にも転送できます。

製品情報(1)

型番	パッケージ	本体サイズ(公称)
TS5A2066	SSOP (DCT)	2.95mm×2.80mm
	VSSOP (DCU)	2.30mm×2.00mm
	DSBGA (YZP)	1.25mm×2.25mm

(1) 提供されているすべてのパッケージについては、データシートの末尾にある注文情報を参照してください。

機能ブロック図

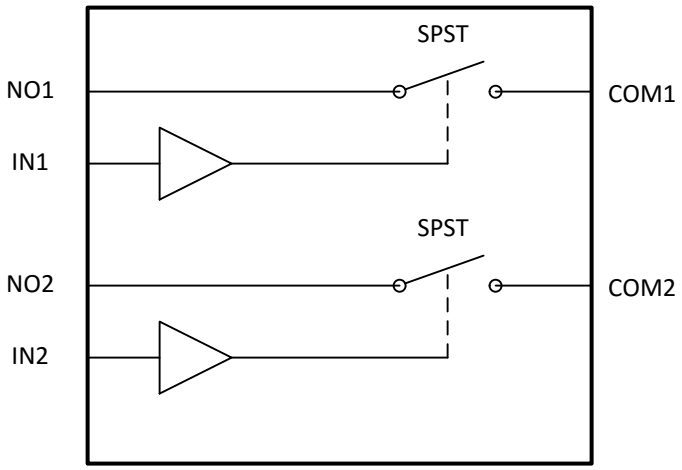

英語版のTI製品についての情報を翻訳したこの資料は、製品の概要を確認する目的で便宜的に提供しているものです。該当する正式な英語版の最新情報は、www.ti.comで閲覧でき、その内容が常に優先されます。TIでは翻訳の正確性および妥当性につきましては一切保証いたしません。実際の設計などの前には、必ず最新版の英語版をご参照くださいますようお願いいたします。

目次

1 特長 ... 1
2 アプリケーション ... 1
3 概要 ... 1
4 改訂履歴 ... 2
5 **Pin Configuration and Functions** ... 3
6 **Specifications** ... 4
6.1 Absolute Maximum Ratings ... 4
6.2 ESD Ratings ... 4
6.3 Recommended Operating Conditions ... 4
6.4 Thermal Information ... 4
6.5 Electrical Characteristics For 5-V Supply ... 5
6.6 Electrical Characteristics For 3.3-V Supply ... 7
6.7 Electrical Characteristics For 2.5-V Supply ... 9
6.8 Electrical Characteristics For 1.8-V Supply ... 11
6.9 Typical Performance ... 13
7 **Parameter Measurement Information** ... 16
8 **Detailed Description** ... 21
8.1 Overview ... 21
8.2 Functional Block Diagram ... 21
8.3 Feature Description ... 21
8.4 Device Functional Modes ... 21
9 **Application and Implementation** ... 22
9.1 Application Information ... 22
9.2 Typical Application ... 22
10 **Power Supply Recommendations** ... 23
11 **Layout** ... 24
11.1 Layout Guidelines ... 24
11.2 Layout Example ... 24
12 デバイスおよびドキュメントのサポート ... 25
12.1 ドキュメントの更新通知を受け取る方法 ... 25
12.2 コミュニティ・リソース ... 25
12.3 商標 ... 25
12.4 静電気放電に関する注意事項 ... 25
12.5 Glossary ... 25
13 メカニカル、パッケージ、および注文情報 ... 25

4 改訂履歴

資料番号末尾の英字は改訂を表しています。その改訂履歴は英語版に準じています。

Revision E (June 2017) から Revision F に変更 — **Page**

- Changed the YZP Package From: Top View To: Bottom View ... 3

Revision D (April 2010) から Revision E に変更 — **Page**

- 「*製品情報*」表、「*ピン構成と機能*」セクション、「*ESD定格*」表、「*推奨動作条件*」表、「*熱に関する情報*」表、「*機能説明*」セクション、「*デバイスの機能モード*」セクション、「*アプリケーションと実装*」セクション、「*電源に関する推奨事項*」セクション、「*レイアウト*」セクション、「*デバイスおよびドキュメントのサポート*」セクション、「*メカニカル、パッケージ、および注文情報*」セクションを追加 ... 1
- Deleted the *Summary of Characteristics* table ... 3
- Changed pin 8 From: V_+ To: V_{CC} in the pinout images ... 3
- Deleted the ON-state resistance Min values of 10 Ω and 12 Ω in the *Electrical Characteristics For 3.3-V Suppy* table ... 7
- Deleted the ON-state resistance Min values of 20 Ω in the *Electrical Characteristics For 2.5-V Supply* table ... 9
- Changed Test Conditions for Charge injection From: See Figure 23 To; See Figure 24 in the *Electrical Characteristics For 2.5-V Supply* table ... 10
- Deleted the ON-state resistance Min values of 80 Ω and 90 Ω in the *Electrical Characteristics For 1.8-V Supply* table ... 11
- Changed V_+ to V_{CC} in the *Typical Performance* graphs ... 13
- Changed V_+ to V_{CC} in the *Parameter Measurement Information* images ... 16

Copyright © 2005–2018, Texas Instruments Incorporated

5 Pin Configuration and Functions

DCT or DCU Package
8 Pin (SSOP or VSSOP)
Top View

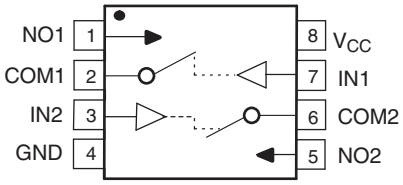

YZP Package
8 Pin (DSBGA)
Bottom View

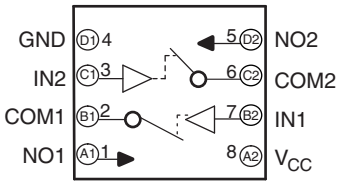

Pin Functions

NO.	NAME	DESCRIPTION
1	NO1	Normally open
2	COM1	Common
3	IN2	Digital control to connect COM to NO
4	GND	Digital ground
5	NO2	Normally open
6	COM2	Common
7	IN1	Digital control to connect COM to NO
8	V_{CC}	Power supply

Copyright © 2005–2018, Texas Instruments Incorporated

6 Specifications

6.1 Absolute Maximum Ratings[1][2]

over operating free-air temperature range (unless otherwise noted)

			MIN	MAX	UNIT
V_{CC}	Supply voltage range[3]		–0.5	6.5	V
V_{NO} V_{COM}	Analog voltage range[3][4][5]		–0.5	V_{CC} + 0.5	V
I_K	Analog port diode current	V_{NO}, V_{COM} < 0 or V_{NO}, V_{COM} > V_{CC}	–50	50	mA
I_{NO} I_{COM}	On-state switch current	V_{NO}, V_{COM} = 0 to V_{CC}	–50	50	mA
V_{IN}	Digital input voltage range[3][4]		–0.5	6.5	V
I_{IK}	Digital input clamp current	V_{IN} < 0	–50		mA
I_{CC}	Continuous current through V_{CC}			100	mA
I_{GND}	Continuous current through GND		–100	100	mA
T_{stg}	Storage temperature range		–65	150	°C

(1) Stresses beyond those listed under "absolute maximum ratings" may cause permanent damage to the device. These are stress ratings only, and functional operation of the device at these or any other conditions beyond those indicated under "recommended operating conditions" is not implied. Exposure to absolute-maximum-rated conditions for extended periods may affect device reliability.
(2) The algebraic convention, whereby the most negative value is a minimum and the most positive value is a maximum.
(3) All voltages are with respect to ground, unless otherwise specified.
(4) The input and output voltage ratings may be exceeded if the input and output clamp-current ratings are observed.
(5) This value is limited to 5.5 V maximum.

6.2 ESD Ratings

			VALUE	UNIT
$V_{(ESD)}$	Electrostatic discharge	Human-body model (HBM), per ANSI/ESDA/JEDEC JS-001[1]	±2000	V
		Charged-device model (CDM), per JEDEC specification JESD22-C101[2]	±1000	

(1) JEDEC document JEP155 states that 500-V HBM allows safe manufacturing with a standard ESD control process.
(2) JEDEC document JEP157 states that 250-V CDM allows safe manufacturing with a standard ESD control process. .

6.3 Recommended Operating Conditions

over operating free-air temperature range (unless otherwise noted)

		MIN	MAX	UNIT
V_{CC}	Supply voltage range	1.65	5.5	V
V_{NO} V_{COM}	Analog voltage range	0	V_{CC}	V
V_{IN}	Digital input voltage range	0	5.5	V

6.4 Thermal Information

THERMAL METRIC[1]		TS5A2066			UNIT
		DCT (SSOP)	DCU (VSSOP)	YZP (DSBGA)	
		8 PINS	8 PINS	8 PINS	
$R_{\theta JA}$	Junction-to-ambient thermal resistance	214.1	212.8	99.8	°C/W
$R_{\theta JC(top)}$	Junction-to-case (top) thermal resistance	106.8	93.6	1.0	°C/W
$R_{\theta JB}$	Junction-to-board thermal resistance	127.8	133.6	29.6	°C/W
ψ_{JT}	Junction-to-top characterization parameter	30.2	30.4	0.5	°C/W
ψ_{JB}	Junction-to-board characterization parameter	125.5	133.1	29.8	°C/W

(1) For more information about traditional and new thermal metrics, see the *Semiconductor and IC Package Thermal Metrics* application report.

Copyright © 2005–2018, Texas Instruments Incorporated

6.5 Electrical Characteristics For 5-V Supply(1)

V_{CC} = 4.5 V to 5.5 V, T_A = –40°C to 85°C (unless otherwise noted)

PARAMETER	SYMBOL	TEST CONDITIONS		T_A	V_{CC}	MIN	TYP	MAX	UNIT
Analog Switch									
Analog signal range	V_{COM}, V_{NO}					0		V_{CC}	V
ON-state resistance	r_{on}	0 ≤ V_{NO} ≤ V_{CC}, I_{COM} = –32 mA,	Switch ON, See Figure 16	25°C	4.5 V		7.5	10	Ω
				Full				15	
ON-state resistance match between channels	Δr_{on}	V_{NO} = 3.15 V, I_{COM} = –32 mA,	Switch ON, SeeFigure 16	25°C	4.5 V		0.4	1	Ω
				Full				3	
ON-state resistance flatness	$r_{on(flat)}$	0 ≤ V_{NO} ≤ V_{CC}, I_{COM} = –32 mA,	Switch ON, See Figure 16	25°C	4.5 V		3.5	5	Ω
				Full				8	
NO OFF leakage current	$I_{NO(OFF)}$	V_{NO} = 1 V, V_{COM} = 4.5 V, or V_{NO} = 4.5 V, V_{COM} = 1 V,	Switch OFF, See Figure 17	25°C	5.5 V	–30	–10	30	nA
				Full		–40		40	
COM OFF leakage current	$I_{COM(OFF)}$	V_{COM} = 1 V, V_{NO} = 4.5 V, or V_{COM} = 4.5 V, V_{NO} = 1 V,	Switch OFF, See Figure 17	25°C	5.5 V	–50	–8	50	nA
				Full		–50		50	
NO ON leakage current	$I_{NO(ON)}$	V_{NO} = 1 V, V_{COM} = Open, or V_{NO} = 4.5 V, V_{COM} = Open	Switch ON, See Figure 18	25°C	5.5 V	–40	–12	40	nA
				Full		–4		40	
COM ON leakage current	$I_{COM(ON)}$	V_{COM} = 1 V, V_{NO} = Open, or V_{COM} = 4.5 V, V_{NO} = Open,	Switch ON, See Figure 18	25°C	5.5 V	–70	–30	70	nA
				Full		–70		70	
Digital Control Input (IN)									
Input logic high	V_{IH}			Full		V_{CC} × 0.7		5.5	V
Input logic low	V_{IL}			Full		0		V_{CC} × 0.3	V
Input leakage current	I_{IH}, I_{IL}	V_{IN} = 5.5 V or 0		25°C	5.5 V	–0.1	0.05	0.1	µA
				Full		–1		1	

(1) The algebraic convention, whereby the most negative value is a minimum and the most positive value is a maximum.

Copyright © 2005–2018, Texas Instruments Incorporated

Electrical Characteristics For 5-V Supply[1] (continued)

V_{CC} = 4.5 V to 5.5 V, T_A = –40°C to 85°C (unless otherwise noted)

PARAMETER	SYMBOL	TEST CONDITIONS		T_A	V_{CC}	MIN	TYP	MAX	UNIT
Dynamic									
Turn-on time	t_{ON}	V_{COM} = 3 V, R_L = 300 Ω,	C_L = 35 pF, See Figure 20	25°C	5 V	4.4	5.2	5.8	ns
				Full	4.5 V to 5.5 V	3.4		6.1	
Turn-off time	t_{OFF}	V_{COM} = 3 V, R_L = 300 Ω,	C_L = 35 pF, See Figure 20	25°C	5 V	1.7	2.6	3.6	ns
				Full	4.5 V to 5.5 V	1.3		4.2	
Charge injection	Q_C	V_{GEN} = 0, R_{GEN} = 0,	C_L = 0.1 nF, See Figure 24	25°C	5 V		1		pC
NO OFF capacitance	$C_{NO(OFF)}$	V_{NO} = V_{CC} or GND,	Switch OFF, See Figure 19	25°C	5 V		5.5		pF
COM OFF capacitance	$C_{COM(OFF)}$	V_{COM} = V_{CC} or GND,	Switch OFF, See Figure 19	25°C	5 V		5.5		pF
NO ON capacitance	$C_{NO(ON)}$	V_{NO} = V_{CC} or GND,	Switch ON, See Figure 19	25°C	5 V		13.5		pF
COM ON capacitance	$C_{COM(ON)}$	V_{COM} = V_{CC} or GND,	Switch ON, See Figure 19	25°C	5 V		13.5		pF
Digital input capacitance	C_{IN}	V_{IN} = V_{CC} or GND,	See Figure 19	25°C	5 V		2.5		pF
Bandwidth	BW	R_L = 50 Ω,	Switch ON, See Figure 21	25°C	5 V		300		MHz
OFF isolation	O_{ISO}	R_L = 50 Ω, f = 10 MHz,	Switch OFF, See Figure 22	25°C	5 V		–68		dB
Crosstalk	X_{TALK}	R_L = 50 Ω, f = 10 MHz,	Switch ON, See Figure 23	25°C	5 V		–66		dB
Total harmonic distortion	THD	R_L = 600 Ω, C_L = 50 pF,	f = 20 Hz to 20 kHz, See Figure 25	25°C	5 V		0.01%		
Supply									
Positive supply current	I_{CC}	V_{IN} = V_{CC} or GND,	Switch ON or OFF	25°C	5.5 V		0.1	1	µA
				Full				5	

Copyright © 2005–2018, Texas Instruments Incorporated

6.6 Electrical Characteristics For 3.3-V Supply(1)

V_{CC} = 3 V to 3.6 V, T_A = –40°C to 85°C (unless otherwise noted)

PARAMETER	SYMBOL	TEST CONDITIONS		T_A	V_{CC}	MIN	TYP	MAX	UNIT
Analog Switch									
Analog signal range	V_{COM}, V_{NO}					0		V_{CC}	V
ON-state resistance	r_{on}	0 ≤ V_{NO} ≤ V_{CC}, I_{COM} = –24 mA,	Switch ON, See Figure 16	25°C	3 V		12	15	Ω
				Full				20	
ON-state resistance match between channels	Δr_{on}	V_{NO} = 2.1 V, I_{COM} = –24 mA,	Switch ON, See Figure 16	25°C	3 V		0.5	1.5	Ω
				Full				3.5	
ON-state resistance flatness	$r_{on(flat)}$	0 ≤ V_{NO} ≤ V_{CC}, I_{COM} = –24 mA,	Switch ON, See Figure 16	25°C	3 V		7	8	Ω
				Full				12	
NO OFF leakage current	$I_{NO(OFF)}$	V_{NO} = 1 V, V_{COM} = 3 V, or V_{NO} = 3 V, V_{COM} = 1 V,	Switch OFF, See Figure 17	25°C	3.6 V	–30	–6	30	nA
				Full		–40		40	
COM OFF leakage current	$I_{COM(OFF)}$	V_{COM} = 1 V, V_{NO} = 3 V, or V_{COM} = 3 V, V_{NO} = 1 V,	Switch OFF, See Figure 17	25°C	3.6 V	–50	–7	50	nA
				Full		–50		50	
NO ON leakage current	$I_{NO(ON)}$	V_{NO} = 1 V, V_{COM} = Open, or V_{NO} = 3 V, V_{COM} = Open,	Switch ON, See Figure 18	25°C	3.6 V	–40	–7	40	nA
				Full		–40		40	
COM ON leakage current	$I_{COM(ON)}$	V_{COM} = 1 V, V_{NO} = Open, or V_{COM} = 3 V, V_{NO} = Open,	Switch ON, See Figure 18	25°C	3.6 V	–70	–20	70	nA
				Full		–70		70	
Digital Control Input (IN)									
Input logic high	V_{IH}			Full		V_{CC} × 0.7		5.5	V
Input logic low	V_{IL}			Full		0		V_{CC} × 0.3	V
Input leakage current	I_{IH}, I_{IL}	V_{IN} = 5.5 V or 0		25°C	3.6 V	–0.1	0.05	0.1	µA
				Full		–1		1	

(1) The algebraic convention, whereby the most negative value is a minimum and the most positive value is a maximum.

Copyright © 2005–2018, Texas Instruments Incorporated

Electrical Characteristics For 3.3-V Supply[1] (continued)

V_{CC} = 3 V to 3.6 V, T_A = –40°C to 85°C (unless otherwise noted)

PARAMETER	SYMBOL	TEST CONDITIONS		T_A	V_{CC}	MIN	TYP	MAX	UNIT
Dynamic									
Turn-on time	t_{ON}	V_{COM} = 2 V, R_L = 300 Ω,	C_L = 35 pF, See Figure 20	25°C	3.3 V	4.9	5.6	6.4	ns
				Full	3 V to 3.6 V	4.3		7.1	
Turn-off time	t_{OFF}	V_{COM} = 2 V, R_L = 300 Ω,	C_L = 35 pF, See Figure 20	25°C	3.3 V	2	2.7	3.7	ns
				Full	3 V to 3.6 V	1.3		4.7	
Charge injection	Q_C	V_{GEN} = 0, R_{GEN} = 0,	C_L = 0.1 nF, See Figure 24	25°C	3.3 V		0.5		pC
NO OFF capacitance	$C_{NO(OFF)}$	V_{NO} = V_{CC} or GND,	Switch OFF, See Figure 19	25°C	3.3 V		5.5		pF
COM OFF capacitance	$C_{COM(OFF)}$	V_{COM} = V_{CC} or GND,	Switch OFF, See Figure 19	25°C	3.3 V		6		pF
NO ON capacitance	$C_{NO(ON)}$	V_{NO} = V_{CC} or GND,	Switch ON, See Figure 19	25°C	3.3 V		14		pF
COM ON capacitance	$C_{COM(ON)}$	V_{COM} = V_{CC} or GND,	Switch ON, See Figure 19	25°C	3.3 V		14		pF
Digital input capacitance	C_I	V_{IN} = V_{CC} or GND,	See Figure 19	25°C	3.3 V		3		pF
Bandwidth	BW	R_L = 50 Ω,	Switch ON, See Figure 21	25°C	3.3 V		300		MHz
OFF isolation	O_{ISO}	R_L = 50 Ω, f = 10 MHz,	Switch OFF, See Figure 22	25°C	3.3 V		–68		dB
Crosstalk	X_{TALK}	R_L = 50 Ω, f = 10 MHz,	Switch ON, See Figure 23	25°C	3.3 V		–66		dB
Total harmonic distortion	THD	R_L = 600 Ω, C_L = 50 pF,	f = 20 Hz to 20 kHz, See Figure 25	25°C	3.3 V		0.065%		
Supply									
Positive supply current	I_{CC}	V_{IN} = V_{CC} or GND,	Switch ON or OFF	25°C	3.6 V		0.1	1	µA
				Full				5	

Copyright © 2005–2018, Texas Instruments Incorporated

6.7 Electrical Characteristics For 2.5-V Supply(1)

V_{CC} = 2.3 V to 2.7 V, T_A = –40°C to 85°C (unless otherwise noted)

PARAMETER	SYMBOL	TEST CONDITIONS		T_A	V_{CC}	MIN	TYP	MAX	UNIT
Analog Switch									
Analog signal range	V_{COM}, V_{NO}					0		V_{CC}	V
ON-state resistance	r_{on}	0 ≤ V_{NO} ≤ V_{CC}, I_{COM} = –8 mA,	Switch ON, See Figure 16	25°C	2.3 V		22		Ω
				Full				30	
ON-state resistance match between channels	Δr_{on}	V_{NO} = 1.6 V, I_{COM} = –8 mA,	Switch ON, SeeFigure 16	25°C	2.3 V		0.5	1.5	Ω
				Full				5	
ON-state resistance flatness	$r_{on(flat)}$	0 ≤ V_{NO} ≤ V_{CC}, I_{COM} = –8 mA,	Switch ON, See Figure 16	25°C	2.3 V		16	18	Ω
				Full				25	
NO OFF leakage current	$I_{NO(OFF)}$	V_{NO} = 0.5 V, V_{COM} = 2.2 V, or V_{NO} = 2.2 V, V_{COM} = 0.5 V,	Switch OFF, See Figure 17	25°C	2.7 V	–30	–5.5	30	nA
				Full		–40		40	
COM OFF leakage current	$I_{COM(OFF)}$	V_{COM} = 0.5 V, V_{NO} = 2.2 V, or V_{COM} = 2.2 V, V_{NO} = 0.5 V,	Switch OFF, See Figure 17	25°C	2.7 V	–50	–7.5	50	nA
				Full		–50		50	
NO ON leakage current	$I_{NO(ON)}$	V_{NO} = 0.5 V, V_{COM} = Open, or V_{NO} = 2.2 V, V_{COM} = Open,	Switch ON, See Figure 18	25°C	2.7 V	–40	–5	40	nA
				Full		–40		40	
COM ON leakage current	$I_{COM(ON)}$	V_{COM} = 0.5 V, V_{NO} = Open, or V_{COM} = 2.2 V, V_{NO} = Open,	Switch ON, See Figure 18	25°C	2.7 V	–70	–12	70	nA
				Full		–70		70	
Digital Control Input (IN)									
Input logic high	V_{IH}			Full		V_{CC} × 0.7		5.5	V
Input logic low	V_{IL}			Full		0		V_{CC} × 0.3	V
Input leakage current	I_{IH}, I_{IL}	V_{IN} = 5.5 V or 0		25°C	2.7 V	–0.1	0.05	0.1	µA
				Full		–1		1	

(1) The algebraic convention, whereby the most negative value is a minimum and the most positive value is a maximum.

Copyright © 2005–2018, Texas Instruments Incorporated

Electrical Characteristics For 2.5-V Supply[(1)] (continued)

V_{CC} = 2.3 V to 2.7 V, T_A = –40°C to 85°C (unless otherwise noted)

PARAMETER	SYMBOL	TEST CONDITIONS		T_A	V_{CC}	MIN	TYP	MAX	UNIT
Dynamic									
Turn-on time	t_{ON}	V_{COM} = 1.5 V, R_L = 300 Ω,	C_L = 35 pF, See Figure 20	25°C	2.5 V	5.7	6.4	8.1	ns
				Full	2.3 V to 2.7 V	4.4		8.5	
Turn-off time	t_{OFF}	V_{COM} = 1.5 V, R_L = 300 Ω,	C_L = 35 pF, See Figure 20	25°C	2.5 V	2.1	3.1	4.3	ns
				Full	2.3 V to 2.7 V	1.8		4.8	
Charge injection	Q_C	V_{GEN} = 0, R_{GEN} = 0,	C_L = 0.1 nF, See Figure 24	25°C	2.5 V		0.5		pC
NO OFF capacitance	$C_{NO(OFF)}$	V_{NO} = V_{CC} or GND,	Switch OFF, See Figure 19	25°C	2.5 V		6		pF
COM OFF capacitance	$C_{COM(OFF)}$	V_{COM} = V_{CC} or GND,	Switch OFF, See Figure 19	25°C	2.5 V		6		pF
NO ON capacitance	$C_{NO(ON)}$	V_{NO} = V_{CC} or GND,	Switch ON, See Figure 19	25°C	2.5 V		14		pF
COM ON capacitance	$C_{COM(ON)}$	V_{COM} = V_{CC} or GND,	Switch ON, See Figure 19	25°C	2.5 V		14		pF
Digital input capacitance	C_{IN}	V_{IN} = V_{CC} or GND,	See Figure 19	25°C	2.5 V		3		pF
Bandwidth	BW	R_L = 50 Ω,	Switch ON, See Figure 21	25°C	2.5 V		300		MHz
OFF isolation	O_{ISO}	R_L = 50 Ω, f = 10 MHz,	Switch OFF, See Figure 22	25°C	2.5 V		–68		dB
Crosstalk	X_{TALK}	R_L = 50 Ω, f = 10 MHz,	Switch ON, See Figure 23	25°C	2.5 V		–66		dB
Total harmonic distortion	THD	R_L = 600 Ω, C_L = 50 pF,	f = 20 Hz to 20 kHz, See Figure 25	25°C	2.5 V		0.35%		
Supply									
Positive supply current	I_{CC}	V_{IN} = V_{CC} or GND,	Switch ON or OFF	25°C	2.7 V		0.1	1	µA
				Full				5	

Copyright © 2005–2018, Texas Instruments Incorporated

6.8 Electrical Characteristics For 1.8-V Supply(1)

V_{CC} = 1.65 V to 1.95 V, T_A = –40°C to 85°C (unless otherwise noted)

PARAMETER	SYMBOL	TEST CONDITIONS		T_A	V_{CC}	MIN	TYP	MAX	UNIT
Analog Switch									
Analog signal range	V_{COM}, V_{NO}					0		V_{CC}	V
ON-state resistance	r_{on}	0 ≤ V_{NO} ≤ V_{CC}, I_{COM} = –4 mA,	Switch ON, See Figure 16	25°C	1.65 V		85		Ω
				Full				120	
ON-state resistance match between channels	Δr_{on}	V_{NO} = 1.15 V, I_{COM} = –4 mA,	Switch ON, See Figure 16	25°C	1.65 V		0.9	2	Ω
				Full				6	
ON-state resistance flatness	$r_{on(flat)}$	0 ≤ V_{NO} ≤ V_{CC}, I_{COM} = –4 mA,	Switch ON, See Figure 16	25°C	1.65 V		75	85	Ω
				Full				100	
NO OFF leakage current	$I_{NO(OFF)}$	V_{NO} = 0.3 V, V_{COM} = 1.65 V, or V_{NO} = 1.65 V, V_{COM} = 0.3 V,	Switch OFF, See Figure 17	25°C	1.95 V	–30	–6	30	nA
				Full		–40		40	
COM OFF leakage current	$I_{COM(OFF)}$	V_{COM} = 0.3 V, V_{NO} = 1.65 V, or V_{COM} = 1.65 V, V_{NO} = 0.3 V,	Switch OFF, See Figure 17	25°C	1.95 V	–50	–7	50	nA
				Full		–50		50	
NO ON leakage current	$I_{NO(ON)}$	V_{NO} = 0.3 V, V_{COM} = Open, or V_{NO} = 1.65 V, V_{COM} = Open,	Switch ON, See Figure 18	25°C	1.95 V	–40	7	40	nA
				Full		–40		40	
COM ON leakage current	$I_{COM(ON)}$	V_{COM} = 0.3 V, V_{NO} = Open, or V_{COM} = 1.65 V, V_{NO} = Open,	Switch ON, See Figure 18	25°C	1.95 V	–70	–8.5	70	nA
				Full		–70		70	
Digital Control Input (IN)									
Input logic high	V_{IH}			Full		V_{CC} × 0.65		5.5	V
Input logic low	V_{IL}			Full		0		V_{CC} × 0.35	V
Input leakage current	I_{IH}, I_{IL}	V_{IN} = 5.5 V or 0		25°C	1.95 V	–0.1	0.05	0.1	µA
				Full		–1		1	

(1) The algebraic convention, whereby the most negative value is a minimum and the most positive value is a maximum.

Copyright © 2005–2018, Texas Instruments Incorporated

Electrical Characteristics For 1.8-V Supply[1] (continued)

V_{CC} = 1.65 V to 1.95 V, T_A = –40°C to 85°C (unless otherwise noted)

PARAMETER	SYMBOL	TEST CONDITIONS		T_A	V_{CC}	MIN	TYP	MAX	UNIT
Dynamic									
Turn-on time	t_{ON}	V_{COM} = 1.3 V, R_L = 300 Ω,	C_L = 35 pF, See Figure 20	25°C	1.8 V	9.3	10.4	11.5	ns
				Full	1.65 V to 1.95 V	6.8		12.9	
Turn-off time	t_{OFF}	V_{COM} = 1.3 V, R_L = 300 Ω,	C_L = 35 pF, See Figure 20	25°C	1.8 V	3.3	4.3	5.2	ns
				Full	1.65 V to 1.95 V	2.4		6.5	
Charge injection	Q_C	V_{GEN} = 0, R_{GEN} = 0,	C_L = 0.1 nF, See Figure 24	25°C	1.8 V		0.5		pC
NO OFF capacitance	$C_{NO(OFF)}$	V_{NO} = V_{CC} or GND,	Switch OFF, See Figure 19	25°C	1.8 V		6		pF
COM OFF capacitance	$C_{COM(OFF)}$	V_{COM} = V_{CC} or GND,	Switch OFF, See Figure 19	25°C	1.8 V		6		pF
NO ON capacitance	$C_{NO(ON)}$	V_{NO} = V_{CC} or GND,	Switch ON, See Figure 19	25°C	1.8 V		14.5		pF
COM ON capacitance	$C_{COM(ON)}$	V_{COM} = V_{CC} or GND,	Switch ON, See Figure 19	25°C	1.8 V		14.5		pF
Digital input capacitance	C_{IN}	V_{IN} = V_{CC} or GND,	See Figure 19	25°C	1.8 V		3		pF
Bandwidth	BW	R_L = 50 Ω,	Switch ON, See Figure 21	25°C	1.8 V		293		MHz
OFF isolation	O_{ISO}	R_L = 50 Ω, f = 10 MHz,	Switch OFF, See Figure 22	25°C	1.8 V		–68		dB
Crosstalk	X_{TALK}	R_L = 50 Ω, f = 10 MHz,	Switch ON, See Figure 23	25°C	1.8 V		–66		dB
Total harmonic distortion	THD	R_L = 10 kΩ, C_L = 50 pF,	f = 20 Hz to 20 kHz, See Figure 25	25°C	1.8 V		2.7%		
Supply									
Positive supply current	I_{CC}	V_{IN} = V_{CC} or GND,	Switch ON or OFF	25°C	1.95 V		0.1	1	µA
				Full				5	

Copyright © 2005–2018, Texas Instruments Incorporated

6.9 Typical Performance

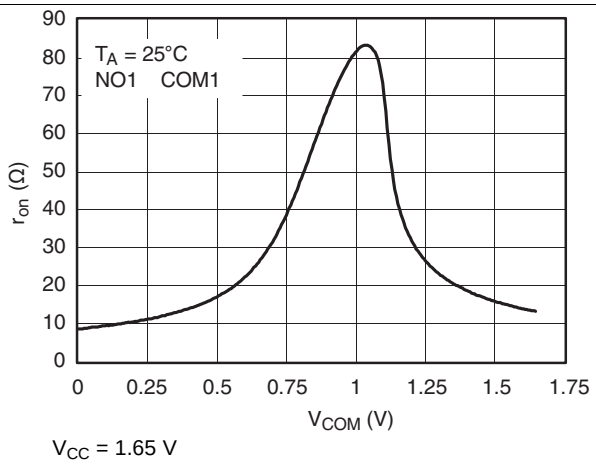

Figure 1. r_{on} vs V_{COM}

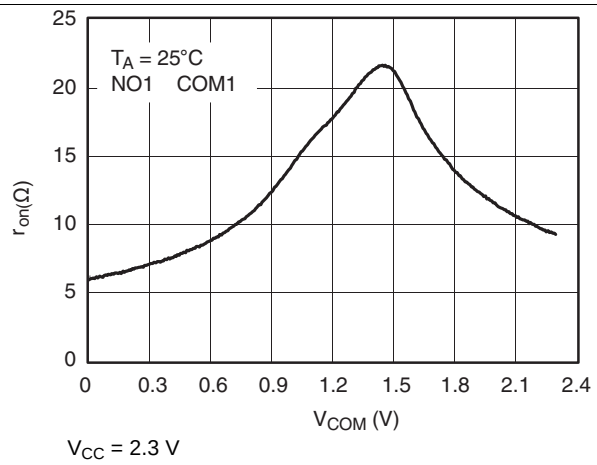

Figure 2. r_{on} vs V_{COM}

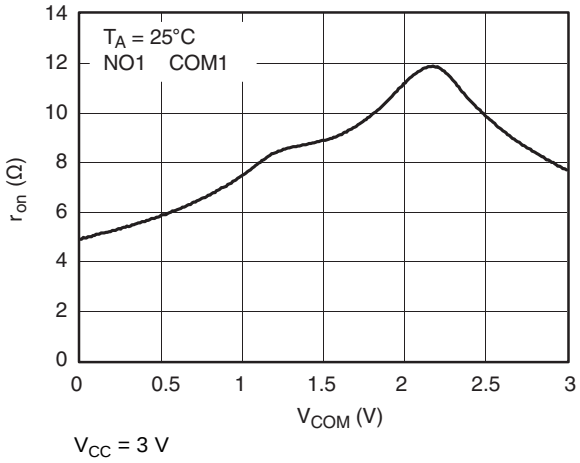

Figure 3. r_{on} vs V_{COM}

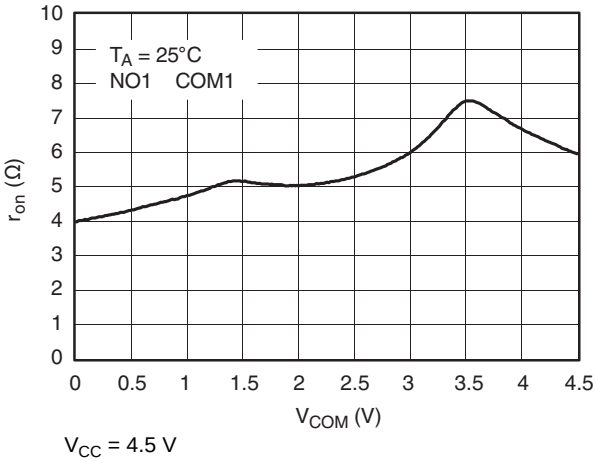

Figure 4. r_{on} vs V_{COM}

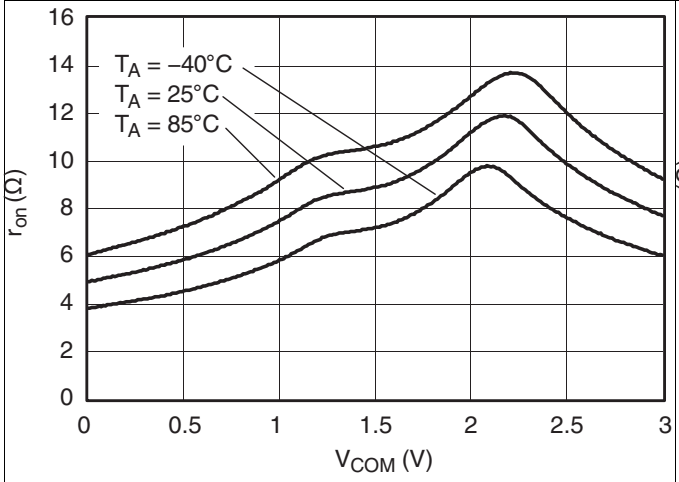

Figure 5. r_{on} vs V_{COM} (V_{CC} = 3 V)

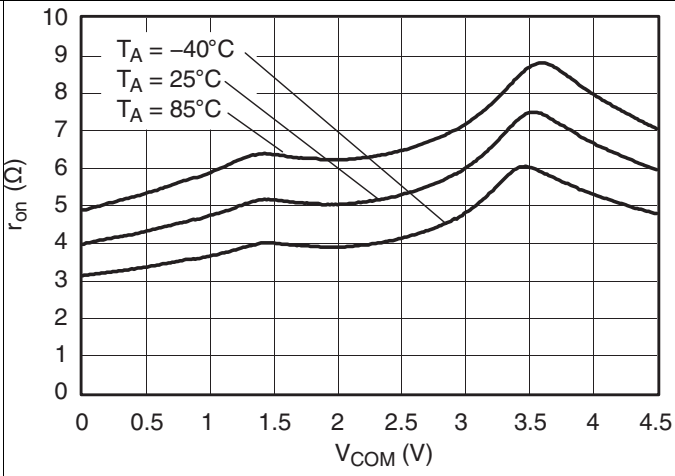

Figure 6. r_{on} vs V_{COM} (V_{CC} = 4.5 V)

Copyright © 2005–2018, Texas Instruments Incorporated

Typical Performance (continued)

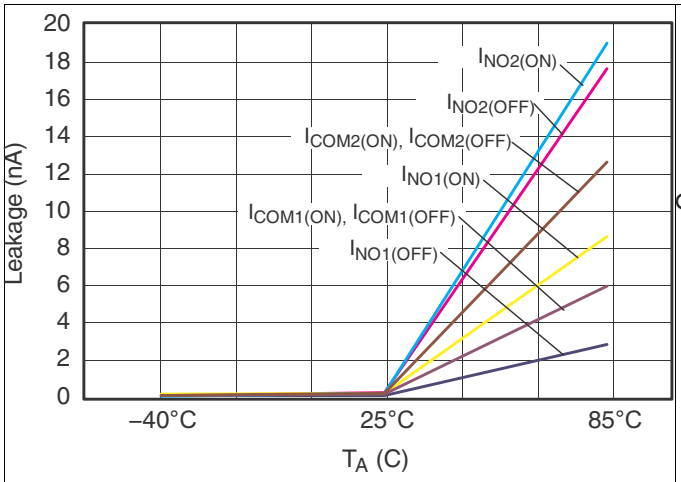

Figure 7. Leakage Current vs Temperature

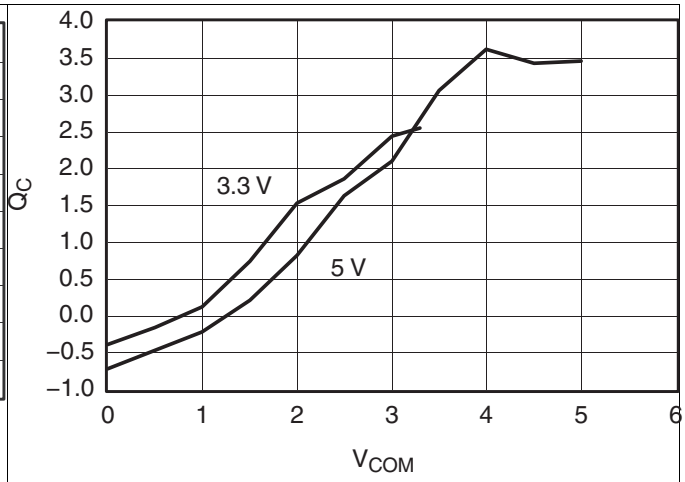

Figure 8. Charge Injection (Q_C) vs V_{COM}

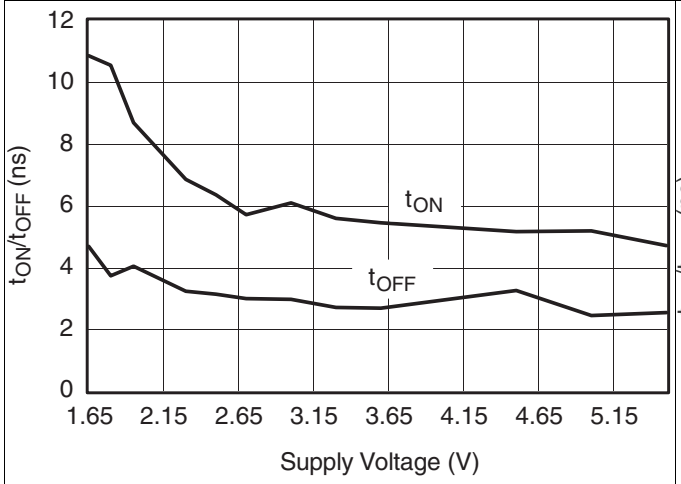

Figure 9. t_{ON} and t_{OFF} vs V_{CC}

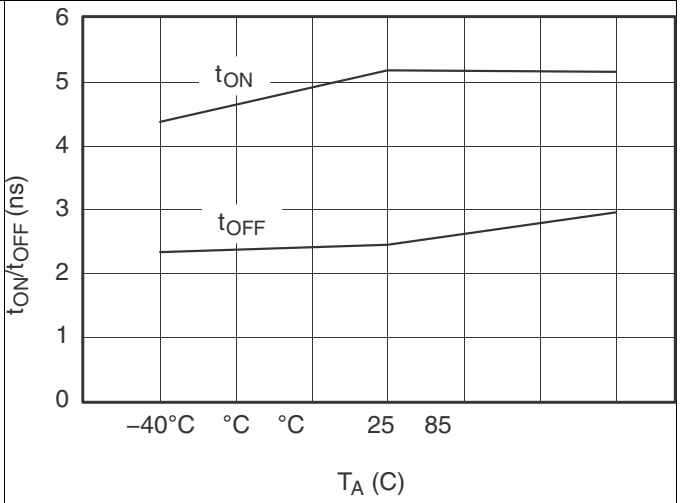

Figure 10. t_{ON} and t_{OFF} vs Temperature (V_{CC} = 5 V)

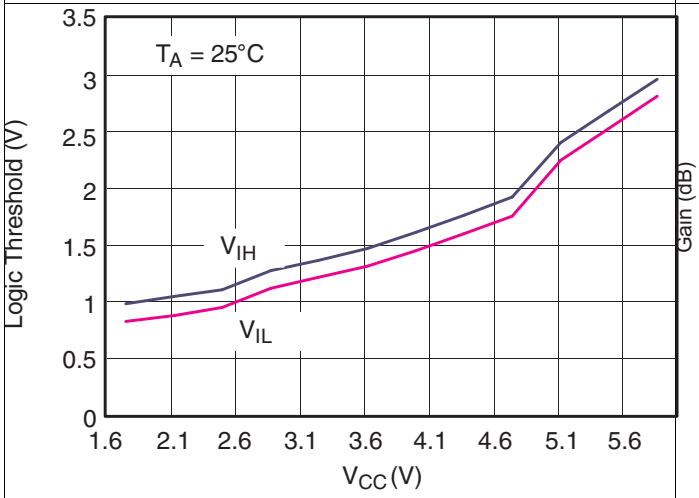

Figure 11. Logic Threshold vs V_{CC}

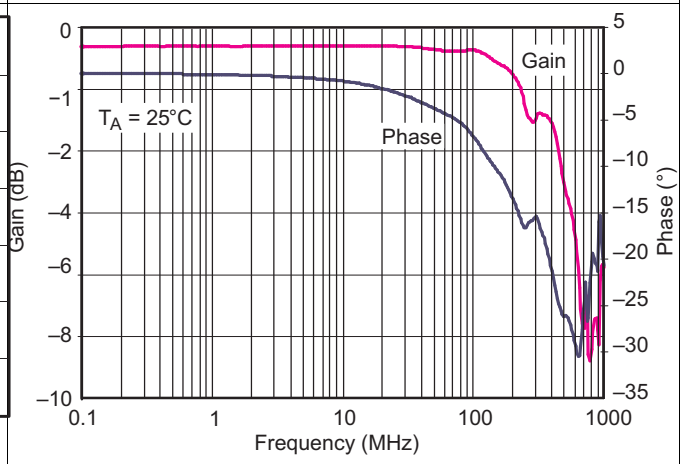

Figure 12. Bandwidth (V_{CC} = 5 V)

Copyright © 2005–2018, Texas Instruments Incorporated

Typical Performance (continued)

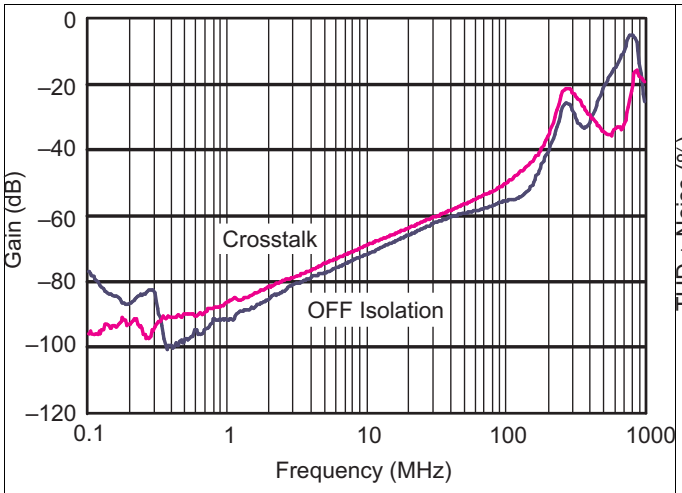

Figure 13. OFF Isolation and Crosstalk (V_{CC} = 5 V)

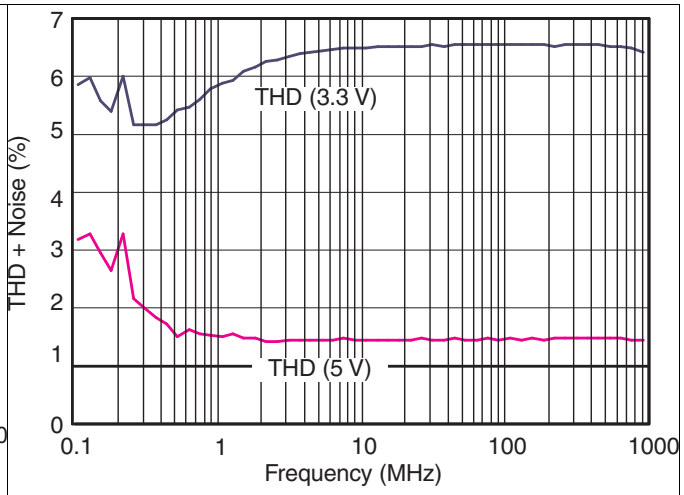

Figure 14. Total Harmonic Distortion vs Frequency

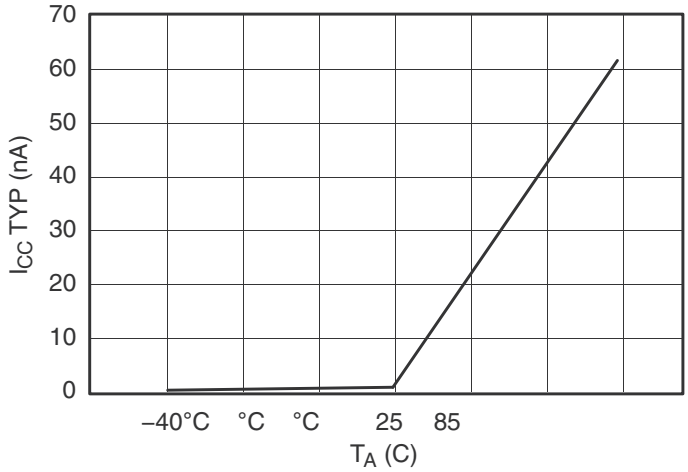

Figure 15. Power-Supply Current vs Temperature (V_{CC} = 5 V)

7 Parameter Measurement Information

Table 1. Parameter Description

SYMBOL	DESCRIPTION
V_{COM}	Voltage at COM
V_{NO}	Voltage at NO
r_{on}	Resistance between COM and NO ports when the channel is ON
Δr_{on}	Difference of r_{on} between channels in a specific device
$r_{on(flat)}$	Difference between the maximum and minimum value of r_{on} in a channel over the specified range of conditions
$I_{NO(OFF)}$	Leakage current measured at the NO port, with the corresponding channel (NO to COM) in the OFF state
$I_{NO(ON)}$	Leakage current measured at the NO port, with the corresponding channel (NO to COM) in the ON state and the output (COM) open
$I_{COM(OFF)}$	Leakage current measured at the COM port, with the corresponding channel (COM to NO) in the OFF state
$I_{COM(ON)}$	Leakage current measured at the COM port, with the corresponding channel (COM to NO) in the ON state and the output (NO) open
V_{IH}	Minimum input voltage for logic high for the control input (IN)
V_{IL}	Maximum input voltage for logic low for the control input (IN)
V_{IN}	Voltage at the control input (IN)
I_{IH}, I_{IL}	Leakage current measured at the control input (IN)
t_{ON}	Turn-on time for the switch. This parameter is measured under the specified range of conditions and by the propagation delay between the digital control (IN) signal and analog output (COM or NO) signal when the switch is turning ON.
t_{OFF}	Turn-off time for the switch. This parameter is measured under the specified range of conditions and by the propagation delay between the digital control (IN) signal and analog output (COM or NO) signal when the switch is turning OFF.
Q_C	Charge injection is a measurement of unwanted signal coupling from the control (IN) input to the analog (NO or COM) output. This is measured in coulomb (C) and measured by the total charge induced due to switching of the control input. Charge injection, $Q_C = C_L \times \Delta V_{COM}$, C_L is the load capacitance and ΔV_{COM} is the change in analog output voltage.
$C_{NO(OFF)}$	Capacitance at the NO port when the corresponding channel (NO to COM) is OFF
$C_{NO(ON)}$	Capacitance at the NO port when the corresponding channel (NO to COM) is ON
$C_{COM(OFF)}$	Capacitance at the COM port when the corresponding channel (COM to NO) is OFF
$C_{COM(ON)}$	Capacitance at the COM port when the corresponding channel (COM to NO) is ON
C_{IN}	Capacitance of IN
O_{ISO}	OFF isolation of the switch is a measurement of OFF-state switch impedance. This is measured in dB in a specific frequency, with the corresponding channel (NO to COM) in the OFF state.
X_{TALK}	Crosstalk is a measurement of unwanted signal coupling from an ON channel to an adjacent ON channel (NC1 to NC2). This is measured in a specific frequency and in dB.
BW	Bandwidth of the switch. This is the frequency in which the gain of an ON channel is –3 dB below the DC gain.
THD	Total harmonic distortion is defined as the ratio of the root mean square (RMS) value of the second, third, and higher harmonics to the magnitude of fundamental harmonic.
I_{CC}	Static power-supply current with the control (IN) pin at V_{CC} or GND

Copyright © 2005–2018, Texas Instruments Incorporated

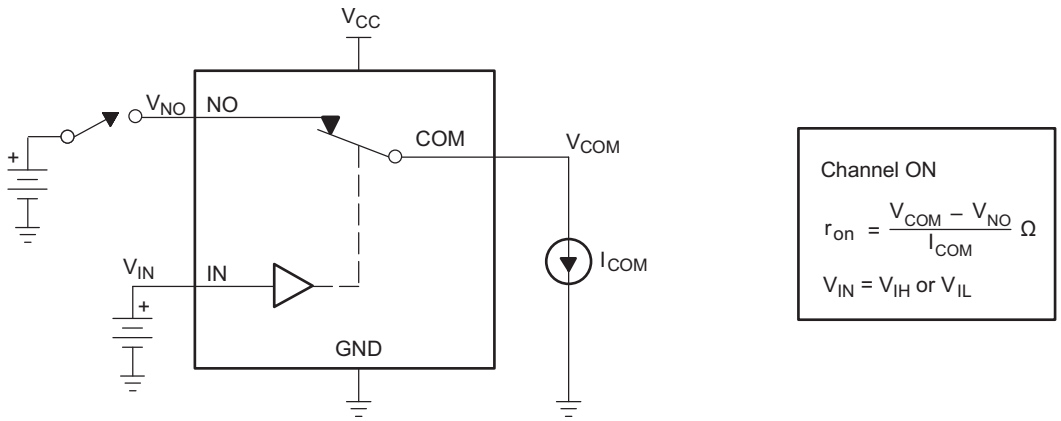

Figure 16. ON-State Resistance (r_{on})

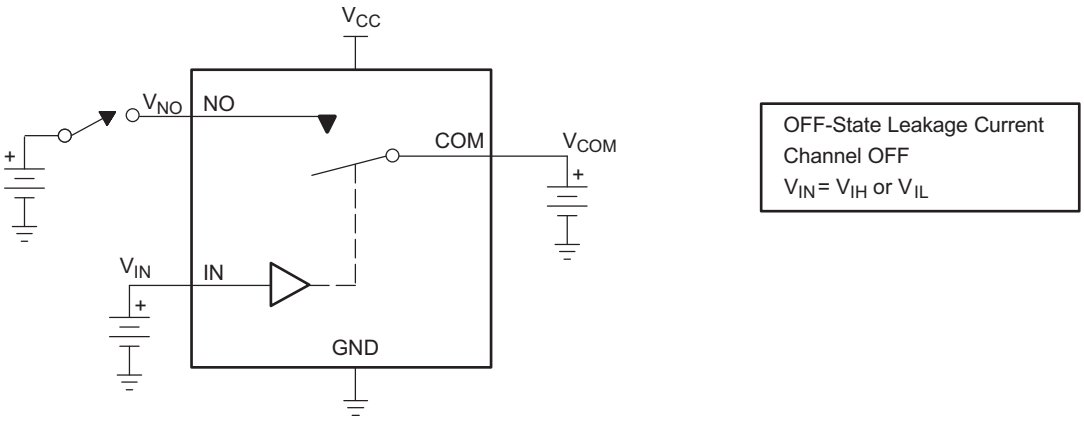

Figure 17. OFF-State Leakage Current ($I_{COM(OFF)}$, $I_{NO(OFF)}$)

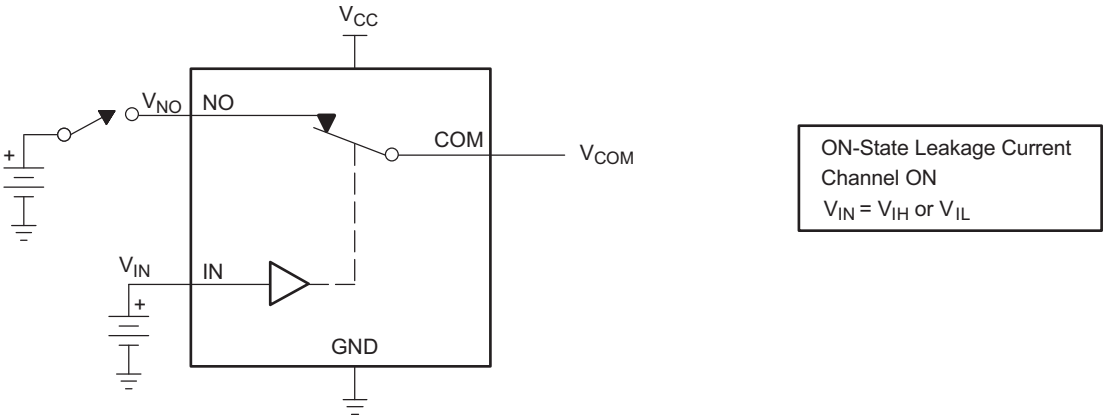

Figure 18. ON-State Leakage Current ($I_{COM(ON)}$, $I_{NO(ON)}$)

Copyright © 2005–2018, Texas Instruments Incorporated

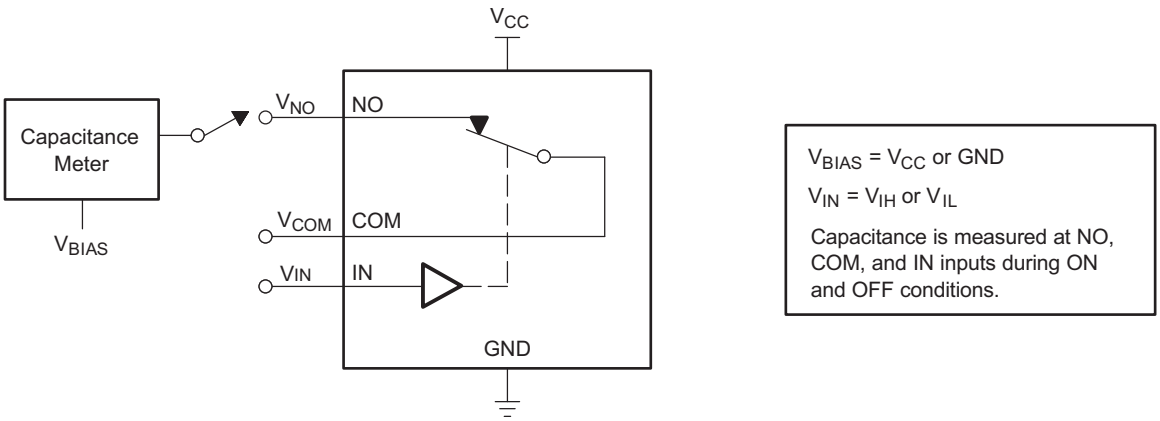

Figure 19. Capacitance (C_{IN}, $C_{COM(OFF)}$, $C_{COM(ON)}$, $C_{NO(OFF)}$, $C_{NO(ON)}$)

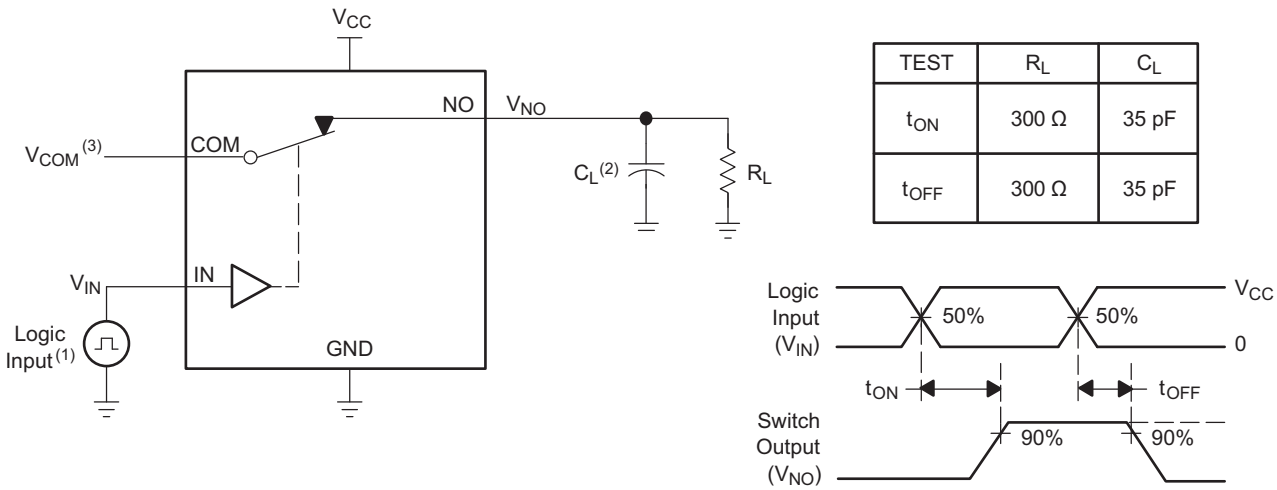

TEST	R_L	C_L
t_{ON}	300 Ω	35 pF
t_{OFF}	300 Ω	35 pF

(1) All input pulses are supplied by generators having the following characteristics: PRR ≤ 10 MHz, Z_O = 50 Ω, t_r < 5 ns, t_f < 5 ns.

(2) C_L includes probe and jig capacitance.

(3) See Electrical Characteristics tables for V_{COM}.

Figure 20. Turn-On (t_{ON}) and Turn-Off Time (t_{OFF})

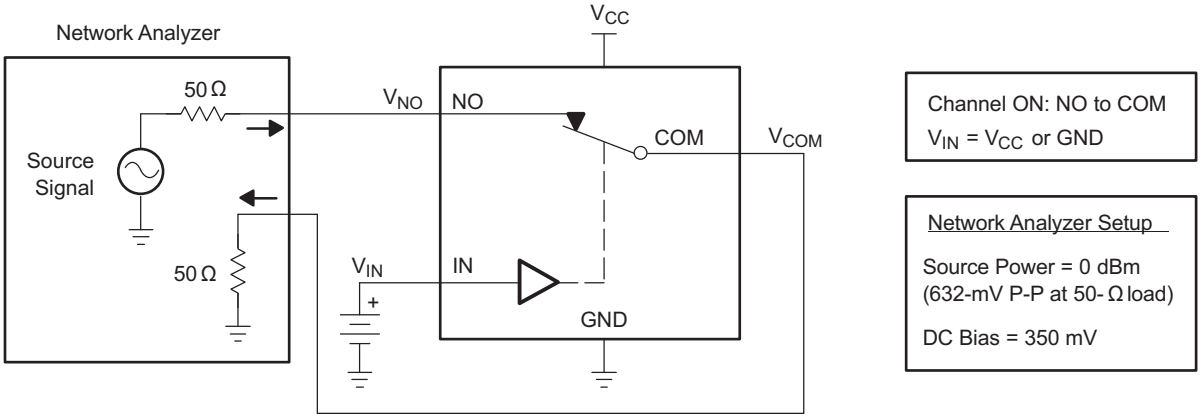

Figure 21. Bandwidth (BW)

Copyright © 2005–2018, Texas Instruments Incorporated

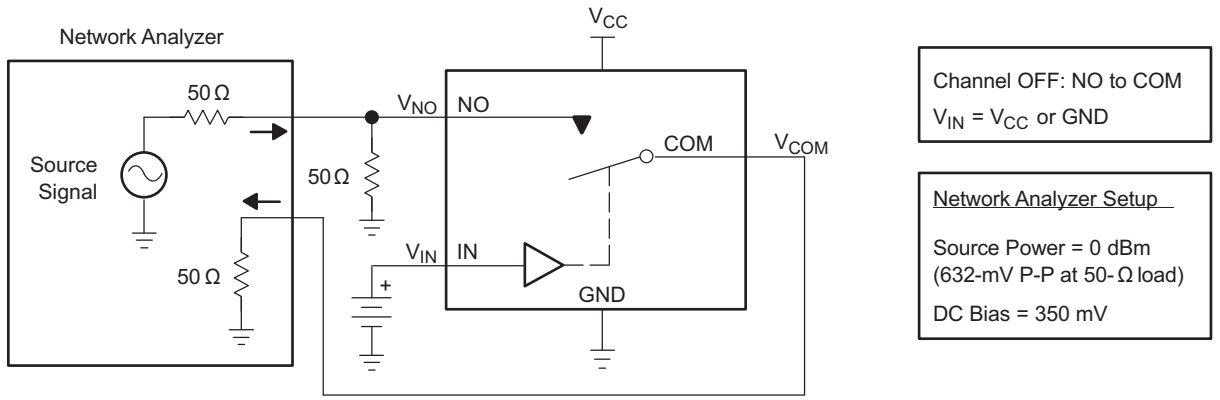

Figure 22. OFF Isolation (O_{ISO})

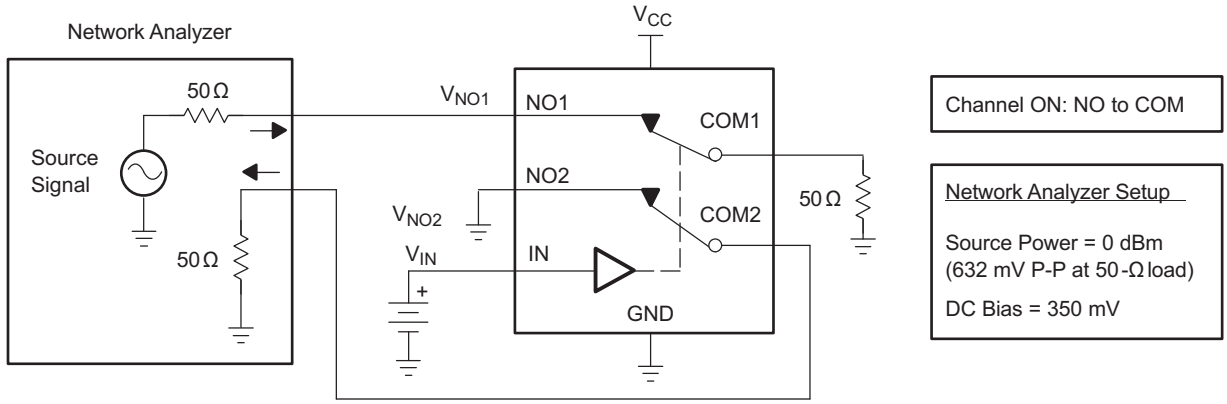

Figure 23. Crosstalk (X_{TALK})

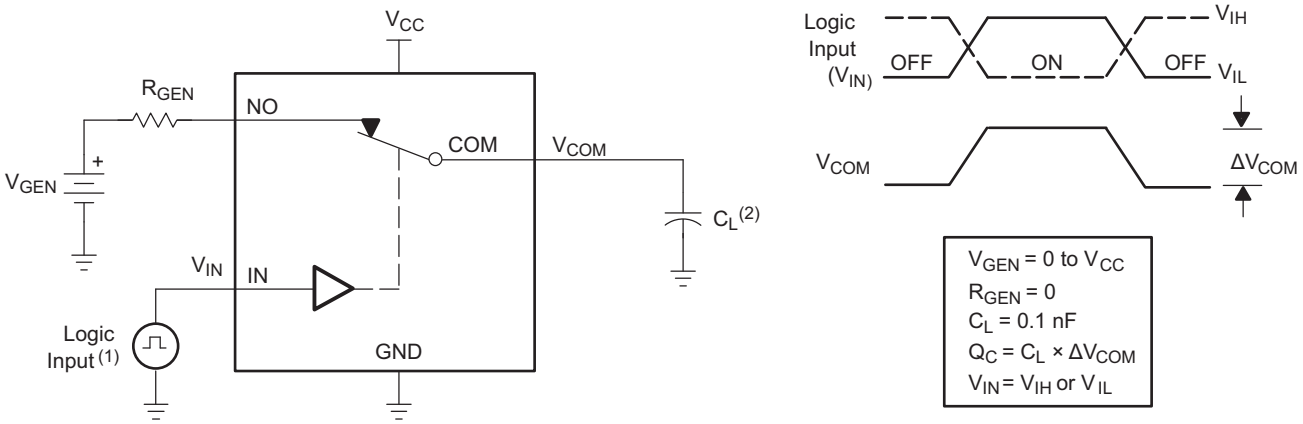

(1) All input pulses are supplied by generators having the following characteristics: PRR ≤ 10 MHz, Z_O = 50 Ω, t_r < 5 ns, t_f < 5 ns.

(2) C_L includes probe and jig capacitance.

Figure 24. Charge Injection (Q_C)

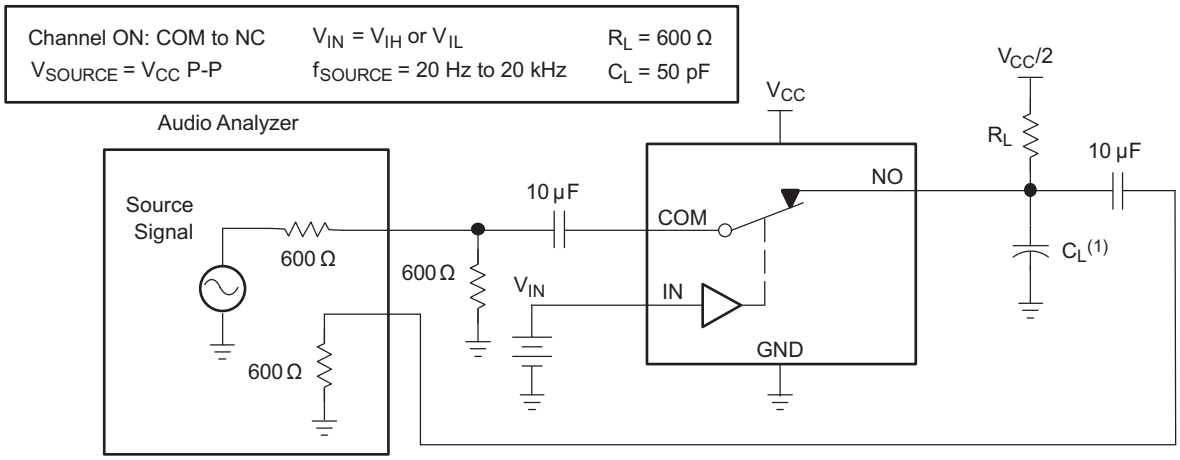

(1) C_L includes probe and jig capacitance.

Figure 25. Total Harmonic Distortion (THD)

Copyright © 2005–2018, Texas Instruments Incorporated

8 Detailed Description

8.1 Overview

The TS5A2066 device is a 2-channel single-pole single-throw (1:1 SPST) analog switch that is designed to operate from 1.65 V to 5.5 V. This device can handle both digital and analog signals, and signals up to V_{CC} can be transmitted in either direction

8.2 Functional Block Diagram

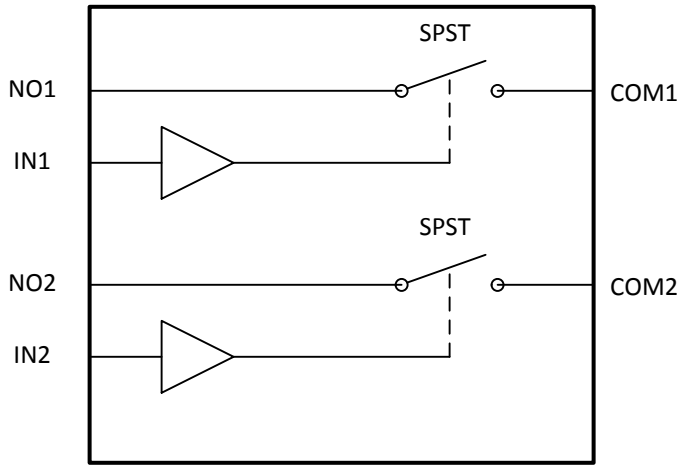

8.3 Feature Description

5-V tolerant control inputs allow 5-V logic levels to be present on the IN pin irrespective of the voltage on VCC pin.

Low ON-resistance and THD performance allows minimal signal distortion through device.

8.4 Device Functional Modes

Table 2 shows the functional modes for TS5A23166.

Table 2. Function Table

IN	NO TO COM, COM TO NO
L	OFF
H	ON

9 Application and Implementation

NOTE

Information in the following applications sections is not part of the TI component specification, and TI does not warrant its accuracy or completeness. TI's customers are responsible for determining suitability of components for their purposes. Customers should validate and test their design implementation to confirm system functionality.

9.1 Application Information

The TS5A2066 2-channel, 1:1 SPST analog switch is a basic component that could be used in any electrical system design that signal isolation.

9.2 Typical Application

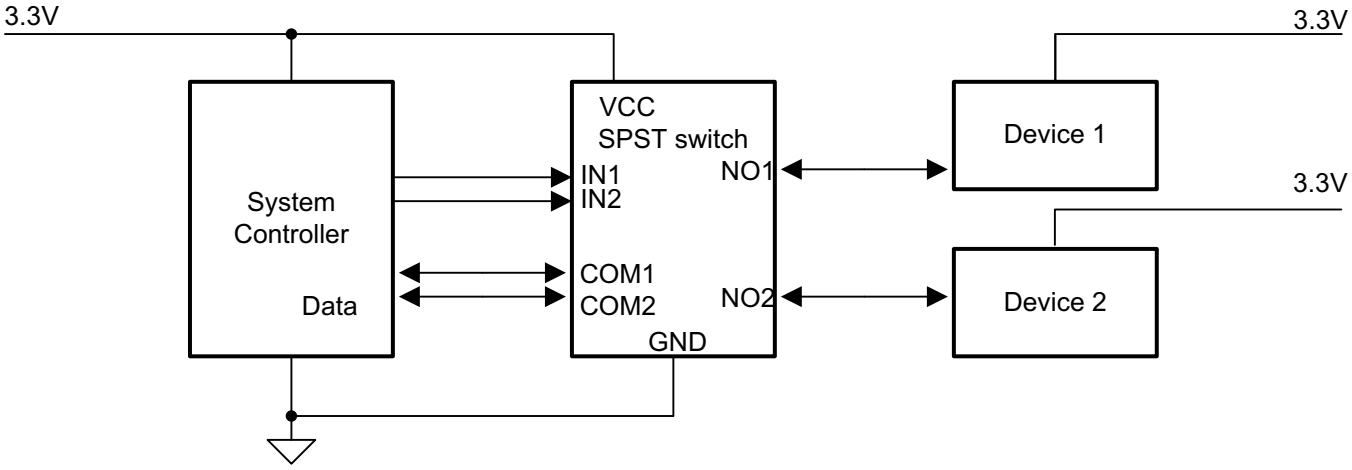

Figure 26. Typical Application Circuit

9.2.1 Design Requirements

Ensure that all of the signals passing through the switch are within the specified ranges in the recommended operating conditions to ensure proper performance.

9.2.2 Detailed Design Procedure

The TS5A2066 can be properly operated without any external components.

Unused signal path pins COM or NO maybe left floating or connected to ground through a 50-Ω resistor to prevent signal reflections back into the device.

TI recommends that the digital control pins (INX) be pulled up to VCC or down to GND to avoid undesired switch positions that could result from the floating pin. Leaving the logic pins floating may increase I_{CC}. Refer to the TI application report, *Implications of Slow or Floating CMOS Inputs* (SCBA004), for further details.

Copyright © 2005–2018, Texas Instruments Incorporated

Typical Application (continued)

9.2.3 Application Curves

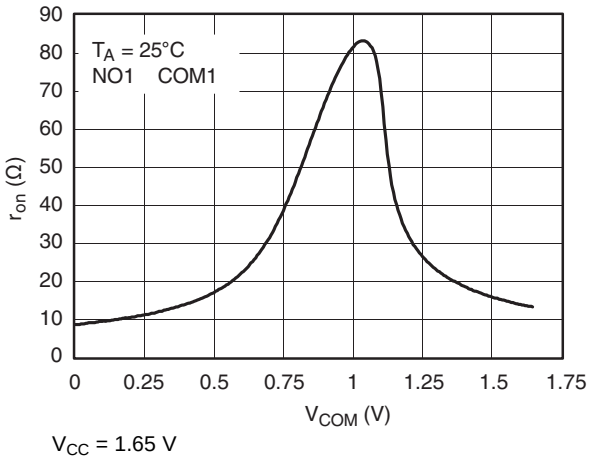

V_{CC} = 1.65 V

Figure 27. r_{on} vs V_{COM}

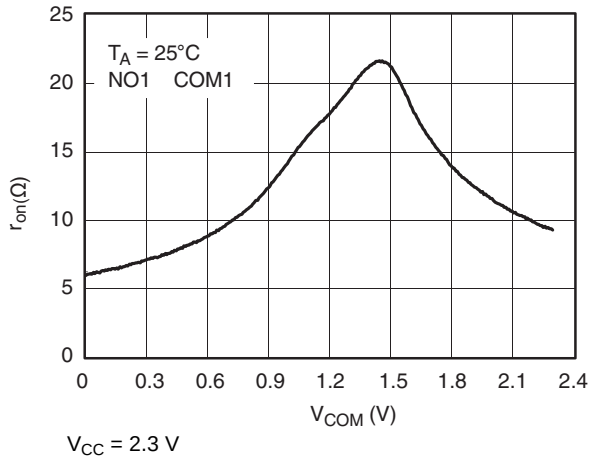

V_{CC} = 2.3 V

Figure 28. r_{on} vs V_{COM}

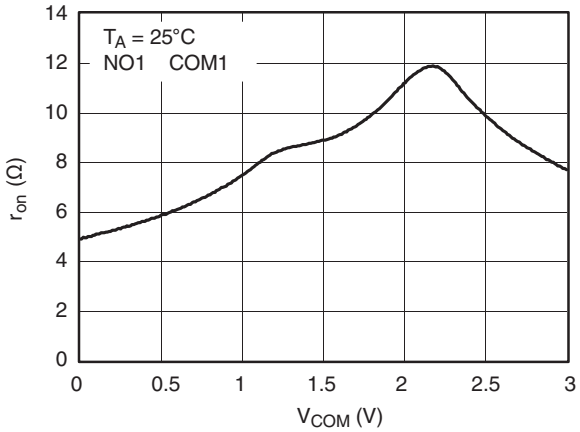

V_{CC} = 3 V

Figure 29. r_{on} vs V_{COM}

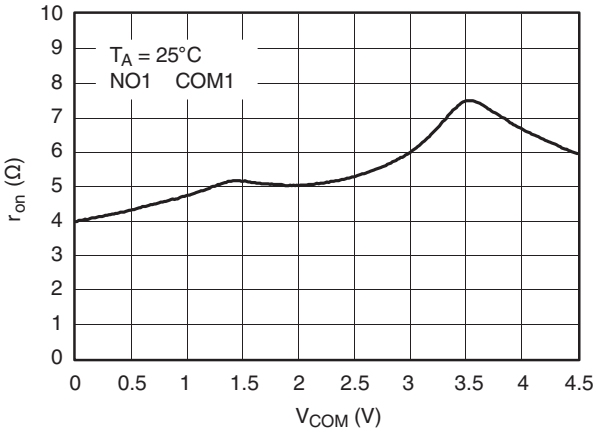

V_{CC} = 4.5 V

Figure 30. r_{on} vs V_{COM}

10 Power Supply Recommendations

Proper power-supply sequencing is recommended for all CMOS devices. Do not exceed the absolute maximum ratings, because stresses beyond the listed ratings can cause permanent damage to the device. Always sequence VCC on first, followed by NO, NC, or COM. Although it is not required, power-supply bypassing improves noise margin and prevents switching noise propagation from the VCC supply to other components. A 0.1-μF capacitor, connected from VCC to GND, is adequate for most applications. Copyright

11 Layout

11.1 Layout Guidelines

High-speed switches require proper layout and design procedures for optimum performance. Reduce stray inductance and capacitance by keeping traces short and wide. Ensure that bypass capacitors are as close to the device as possible. Use large ground planes where possible.

11.2 Layout Example

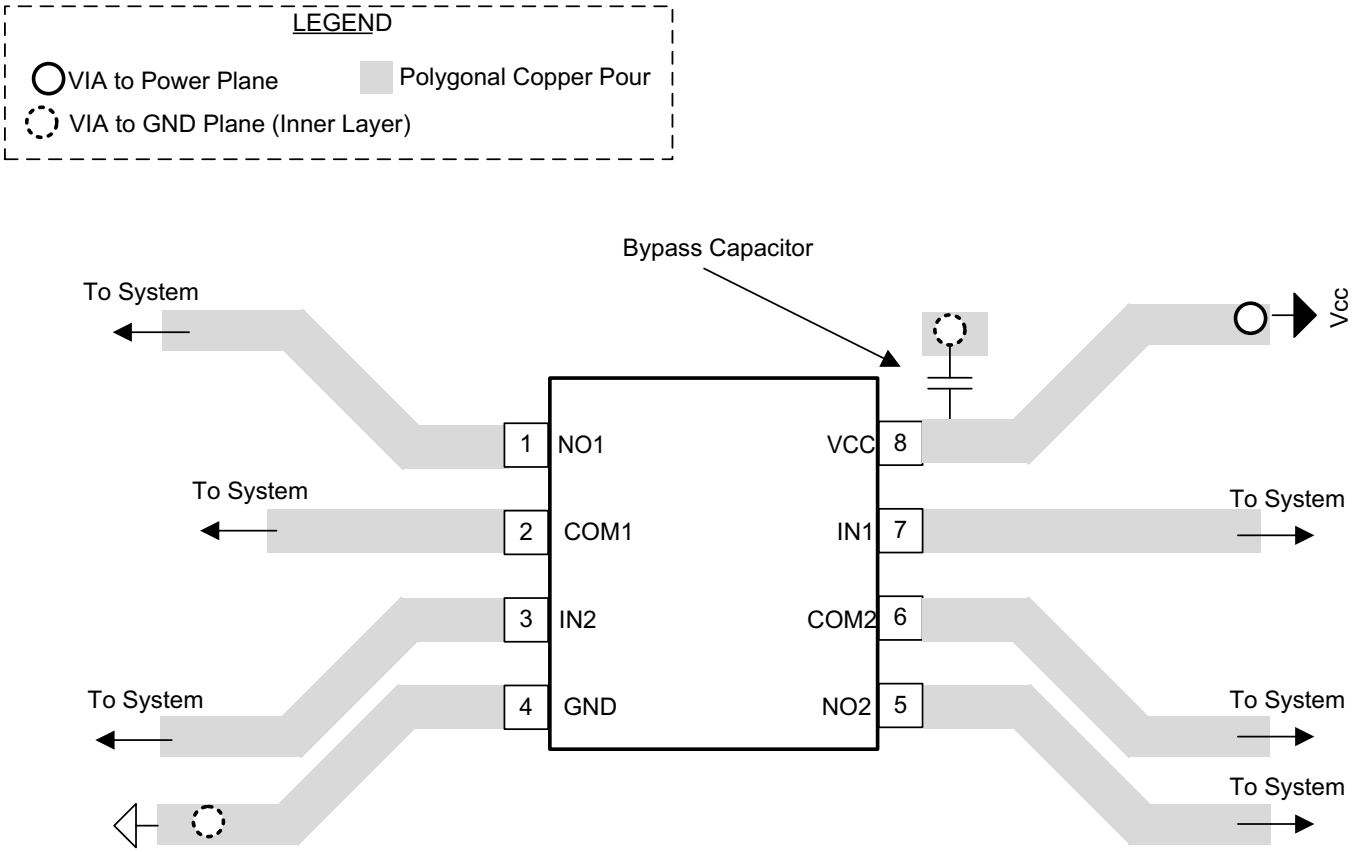

Figure 31. Layout Example

Copyright © 2005–2018, Texas Instruments Incorporated

12 デバイスおよびドキュメントのサポート

12.1 ドキュメントの更新通知を受け取る方法

ドキュメントの更新についての通知を受け取るには、ti.comのデバイス製品フォルダを開いてください。右上の隅にある「*通知を受け取る*」をクリックして登録すると、変更されたすべての製品情報に関するダイジェストを毎週受け取れます。変更の詳細については、修正されたドキュメントに含まれている改訂履歴をご覧ください。

12.2 コミュニティ・リソース

The following links connect to TI community resources. Linked contents are provided "AS IS" by the respective contributors. They do not constitute TI specifications and do not necessarily reflect TI's views; see TI's Terms of Use.

TI E2E™オンライン・コミュニティ ***TIのE2E（Engineer-to-Engineer）コミュニティ。***エンジニア間の共同作業を促進するために開設されたものです。e2e.ti.comでは、他のエンジニアに質問し、知識を共有し、アイディアを検討して、問題解決に役立てることができます。

設計サポート ***TIの設計サポート*** 役に立つE2Eフォーラムや、設計サポート・ツールをすばやく見つけることができます。技術サポート用の連絡先情報も参照できます。

12.3 商標

E2E is a trademark of Texas Instruments.
All other trademarks are the property of their respective owners.

12.4 静電気放電に関する注意事項

すべての集積回路は、適切なESD保護方法を用いて、取扱いと保存を行うようにして下さい。

静電気放電はわずかな性能の低下から完全なデバイスの故障に至るまで、様々な損傷を与えます。高精度の集積回路は、損傷に対して敏感であり、極めてわずかなパラメータの変化により、デバイスに規定された仕様に適合しなくなる場合があります。

12.5 Glossary

SLYZ022 — *TI Glossary*.

This glossary lists and explains terms, acronyms, and definitions.

13 メカニカル、パッケージ、および注文情報

以降のページには、メカニカル、パッケージ、および注文に関する情報が記載されています。この情報は、そのデバイスについて利用可能な最新のデータです。このデータは予告なく変更されることがあり、ドキュメントが改訂される場合もあります。本データシートのブラウザ版を使用されている場合は、画面左側の説明をご覧ください。

PACKAGING INFORMATION

Orderable part number	Status (1)	Material type (2)	Package | Pins	Package qty | Carrier	RoHS (3)	Lead finish/ Ball material (4)	MSL rating/ Peak reflow (5)	Op temp (°C)	Part marking (6)
TS5A2066DCTR	Active	Production	SSOP (DCT) | 8	3000 | LARGE T&R	Yes	NIPDAU	Level-1-260C-UNLIM	-40 to 85	JAG Z
TS5A2066DCTR.B	Active	Production	SSOP (DCT) | 8	3000 | LARGE T&R	Yes	NIPDAU	Level-1-260C-UNLIM	-40 to 85	JAG Z
TS5A2066DCUR	Active	Production	VSSOP (DCU) | 8	3000 | LARGE T&R	Yes	NIPDAU | SN	Level-1-260C-UNLIM	-40 to 85	JAGR
TS5A2066DCUR.B	Active	Production	VSSOP (DCU) | 8	3000 | LARGE T&R	Yes	SN	Level-1-260C-UNLIM	-40 to 85	JAGR
TS5A2066YZPR	Active	Production	DSBGA (YZP) | 8	3000 | LARGE T&R	Yes	SNAGCU	Level-1-260C-UNLIM	-40 to 85	J4N
TS5A2066YZPR.B	Active	Production	DSBGA (YZP) | 8	3000 | LARGE T&R	Yes	SNAGCU	Level-1-260C-UNLIM	-40 to 85	J4N

(1) **Status:** For more details on status, see our product life cycle.

(2) **Material type:** When designated, preproduction parts are prototypes/experimental devices, and are not yet approved or released for full production. Testing and final process, including without limitation quality assurance, reliability performance testing, and/or process qualification, may not yet be complete, and this item is subject to further changes or possible discontinuation. If available for ordering, purchases will be subject to an additional waiver at checkout, and are intended for early internal evaluation purposes only. These items are sold without warranties of any kind.

(3) **RoHS values:** Yes, No, RoHS Exempt. See the TI RoHS Statement for additional information and value definition.

(4) **Lead finish/Ball material:** Parts may have multiple material finish options. Finish options are separated by a vertical ruled line. Lead finish/Ball material values may wrap to two lines if the finish value exceeds the maximum column width.

(5) **MSL rating/Peak reflow:** The moisture sensitivity level ratings and peak solder (reflow) temperatures. In the event that a part has multiple moisture sensitivity ratings, only the lowest level per JEDEC standards is shown. Refer to the shipping label for the actual reflow temperature that will be used to mount the part to the printed circuit board.

(6) **Part marking:** There may be an additional marking, which relates to the logo, the lot trace code information, or the environmental category of the part.

Multiple part markings will be inside parentheses. Only one part marking contained in parentheses and separated by a "~" will appear on a part. If a line is indented then it is a continuation of the previous line and the two combined represent the entire part marking for that device.

Important Information and Disclaimer: The information provided on this page represents TI's knowledge and belief as of the date that it is provided. TI bases its knowledge and belief on information provided by third parties, and makes no representation or warranty as to the accuracy of such information. Efforts are underway to better integrate information from third parties. TI has taken and continues to take reasonable steps to provide representative and accurate information but may not have conducted destructive testing or chemical analysis on incoming materials and chemicals. TI and TI suppliers consider certain information to be proprietary, and thus CAS numbers and other limited information may not be available for release.

In no event shall TI's liability arising out of such information exceed the total purchase price of the TI part(s) at issue in this document sold by TI to Customer on an annual basis.

TAPE AND REEL INFORMATION

REEL DIMENSIONS

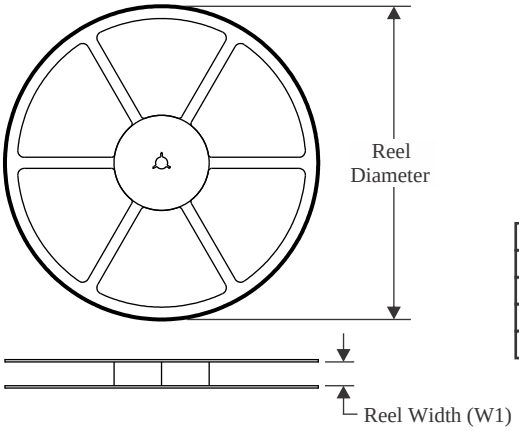

TAPE DIMENSIONS

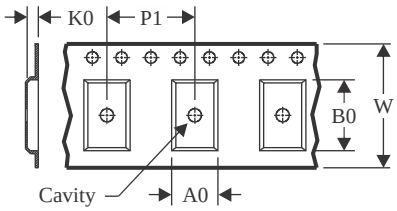

A0	Dimension designed to accommodate the component width
B0	Dimension designed to accommodate the component length
K0	Dimension designed to accommodate the component thickness
W	Overall width of the carrier tape
P1	Pitch between successive cavity centers

QUADRANT ASSIGNMENTS FOR PIN 1 ORIENTATION IN TAPE

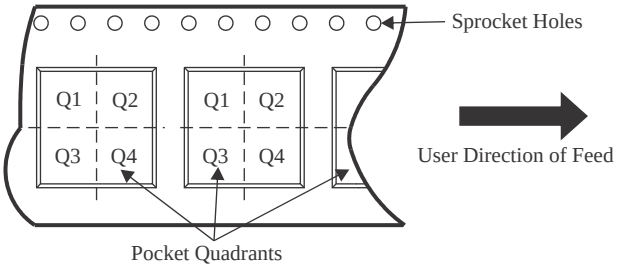

*All dimensions are nominal

Device	Package Type	Package Drawing	Pins	SPQ	Reel Diameter (mm)	Reel Width W1 (mm)	A0 (mm)	B0 (mm)	K0 (mm)	P1 (mm)	W (mm)	Pin1 Quadrant
TS5A2066DCTR	SSOP	DCT	8	3000	180.0	13.0	3.35	4.5	1.55	4.0	12.0	Q3
TS5A2066DCUR	VSSOP	DCU	8	3000	178.0	9.0	2.25	3.35	1.05	4.0	8.0	Q3
TS5A2066YZPR	DSBGA	YZP	8	3000	178.0	9.2	1.02	2.02	0.63	4.0	8.0	Q1

TAPE AND REEL BOX DIMENSIONS

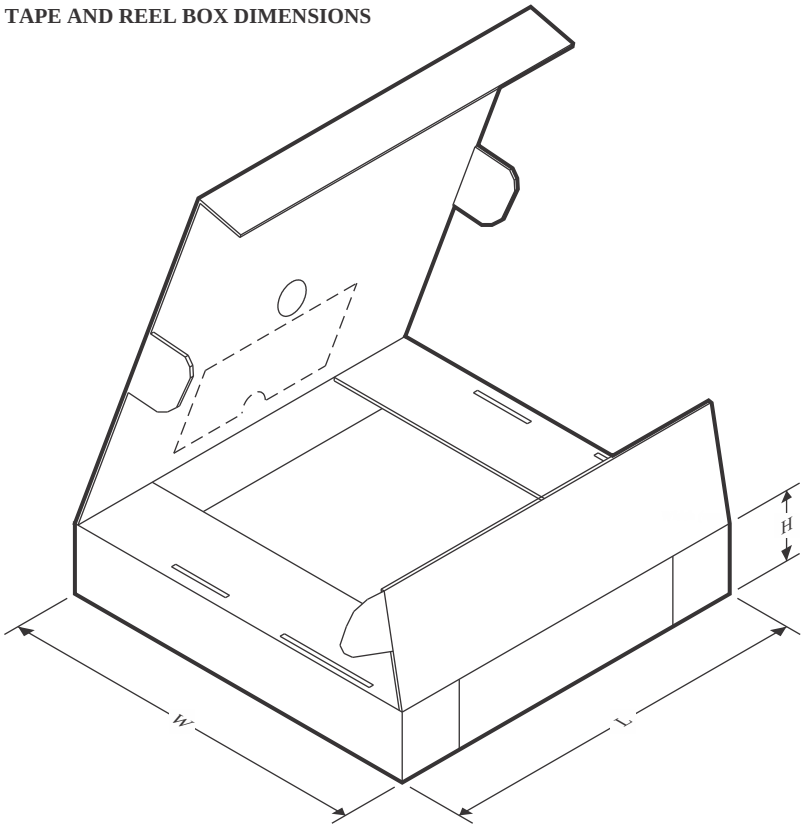

*All dimensions are nominal

Device	Package Type	Package Drawing	Pins	SPQ	Length (mm)	Width (mm)	Height (mm)
TS5A2066DCTR	SSOP	DCT	8	3000	182.0	182.0	20.0
TS5A2066DCUR	VSSOP	DCU	8	3000	180.0	180.0	18.0
TS5A2066YZPR	DSBGA	YZP	8	3000	220.0	220.0	35.0

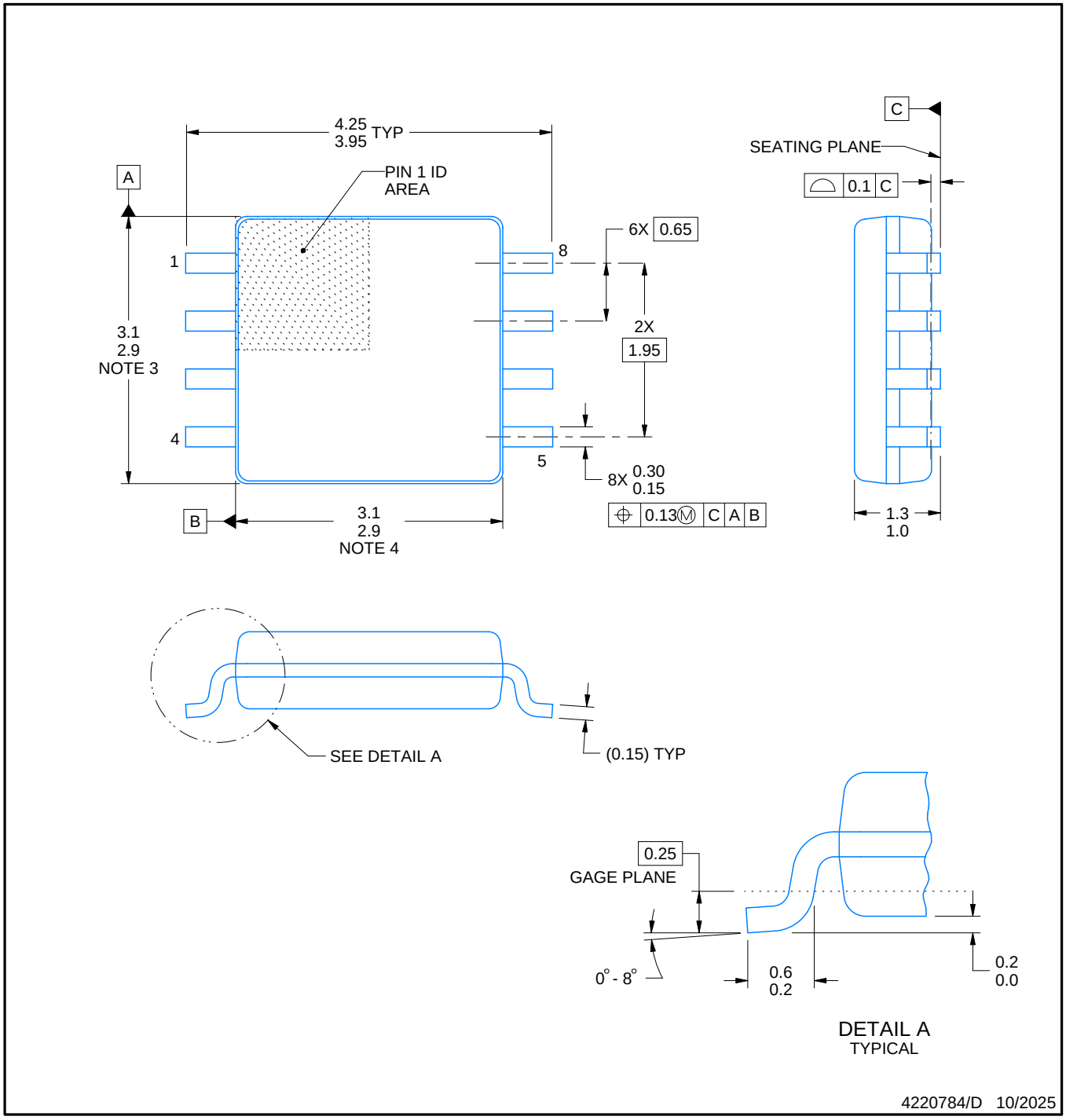

NOTES:

1. All linear dimensions are in millimeters. Dimensions in parenthesis are for reference only. Dimensioning and tolerancing per ASME Y14.5M.
2. This drawing is subject to change without notice.
3. This dimension does not include mold flash, protrusions, or gate burrs. Mold flash, protrusions, or gate burrs shall not exceed 0.15 mm per side.
4. This dimension does not include interlead flash. Interlead flash shall not exceed 0.25 mm per side.

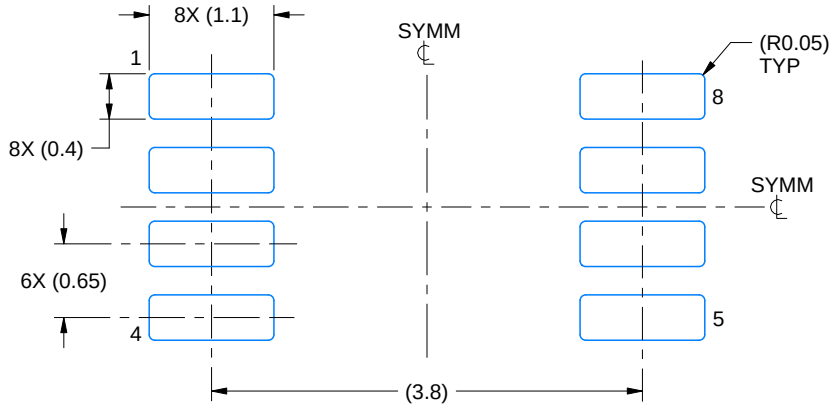

LAND PATTERN EXAMPLE
EXPOSED METAL SHOWN
SCALE:15X

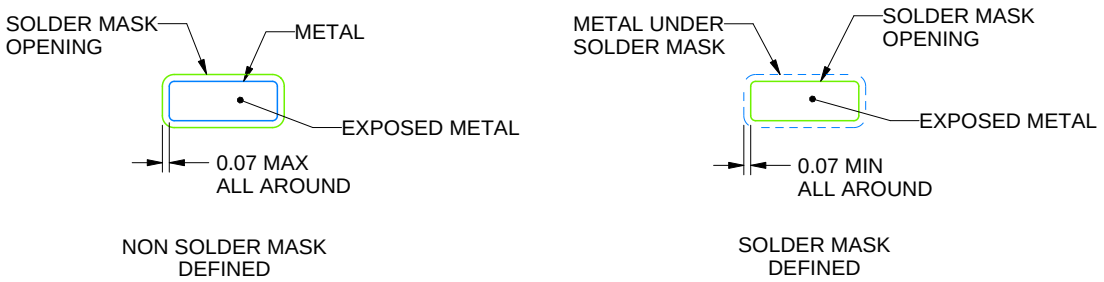

SOLDER MASK DETAILS

4220784/D 10/2025

NOTES: (continued)

5. Publication IPC-7351 may have alternate designs.
6. Solder mask tolerances between and around signal pads can vary based on board fabrication site.

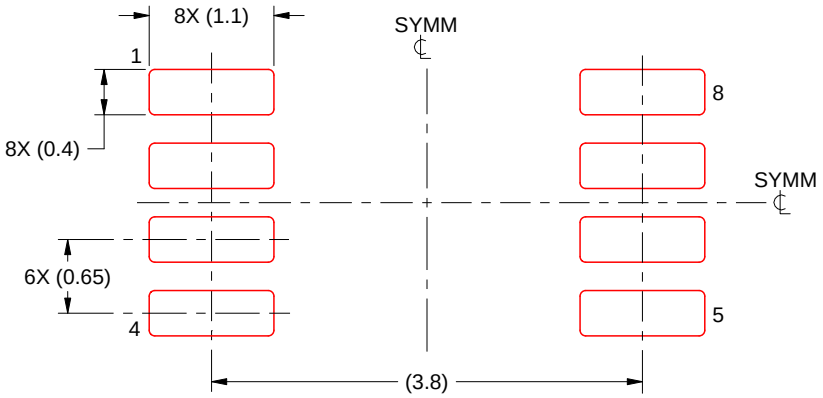

SOLDER PASTE EXAMPLE
BASED ON 0.125 mm THICK STENCIL
SCALE:15X

4220784/D 10/2025

NOTES: (continued)

7. Laser cutting apertures with trapezoidal walls and rounded corners may offer better paste release. IPC-7525 may have alternate design recommendations.
8. Board assembly site may have different recommendations for stencil design.

DCU0008A

PACKAGE OUTLINE

VSSOP - 0.9 mm max height

SMALL OUTLINE PACKAGE

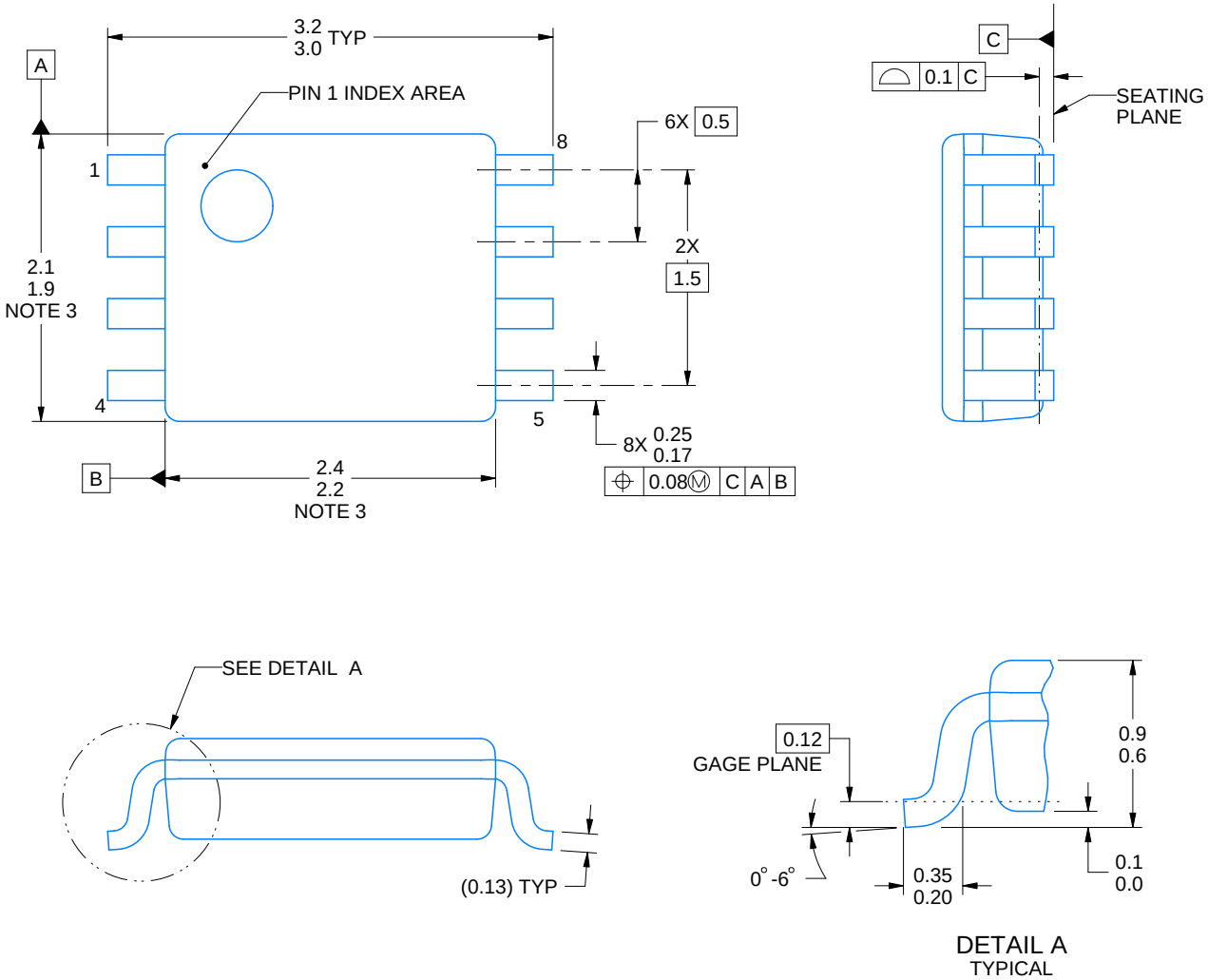

4225266/A 09/2014

NOTES:

1. All linear dimensions are in millimeters. Any dimensions in parenthesis are for reference only. Dimensioning and tolerancing per ASME Y14.5M.
2. This drawing is subject to change without notice.
3. This dimension does not include mold flash, protrusions, or gate burrs. Mold flash, protrusions, or gate burrs shall not exceed 0.15 mm per side.
4. Reference JEDEC registration MO-187 variation CA.

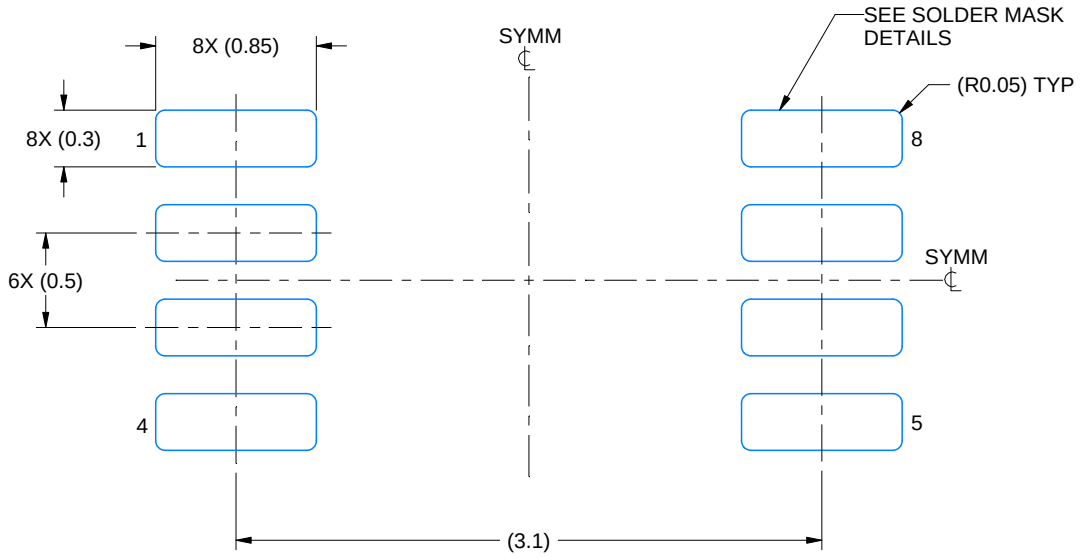

LAND PATTERN EXAMPLE
EXPOSED METAL SHOWN
SCALE: 25X

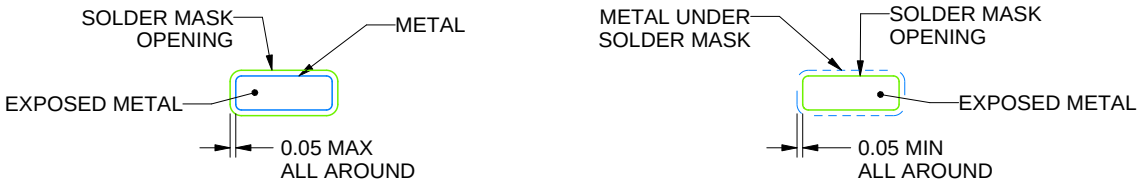

SOLDER MASK DETAILS

4225266/A 09/2014

NOTES: (continued)

5. Publication IPC-7351 may have alternate designs.
6. Solder mask tolerances between and around signal pads can vary based on board fabrication site.

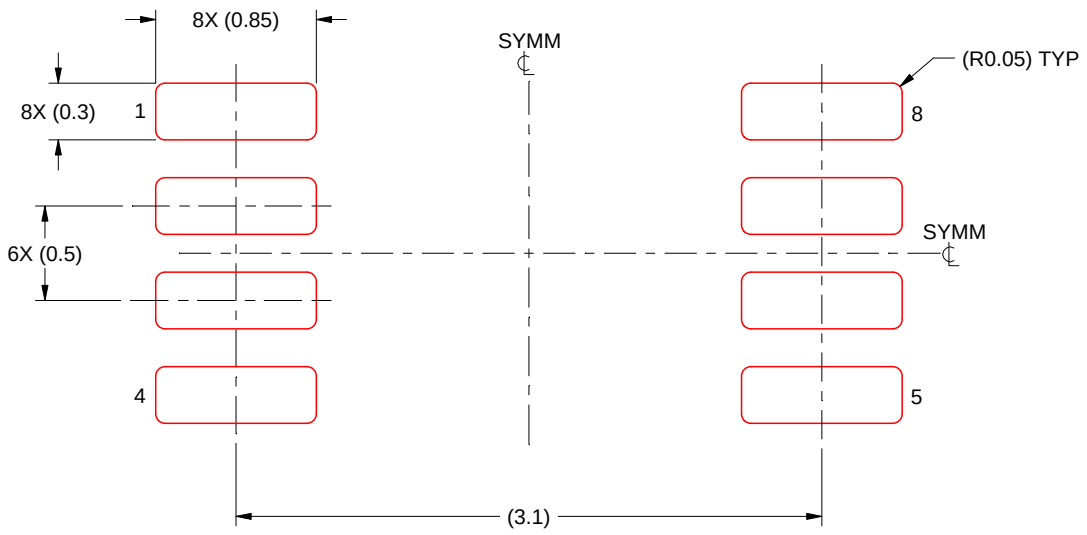

SOLDER PASTE EXAMPLE
BASED ON 0.125 mm THICK STENCIL
SCALE: 25X

4225266/A 09/2014

NOTES: (continued)

7. Laser cutting apertures with trapezoidal walls and rounded corners may offer better paste release. IPC-7525 may have alternate design recommendations.
8. Board assembly site may have different recommendations for stencil design.

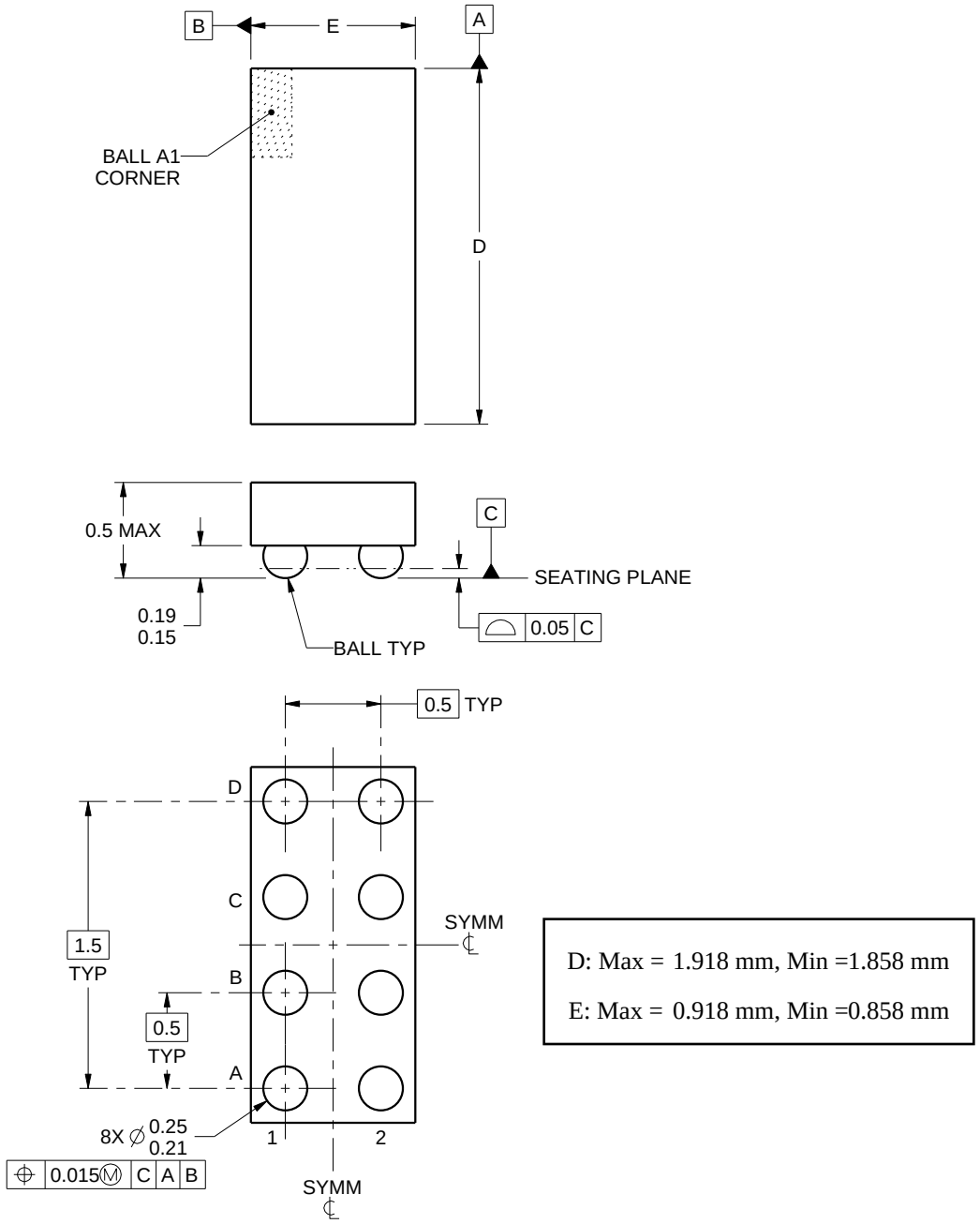

NOTES:

1. All linear dimensions are in millimeters. Any dimensions in parenthesis are for reference only. Dimensioning and tolerancing per ASME Y14.5M.
2. This drawing is subject to change without notice.

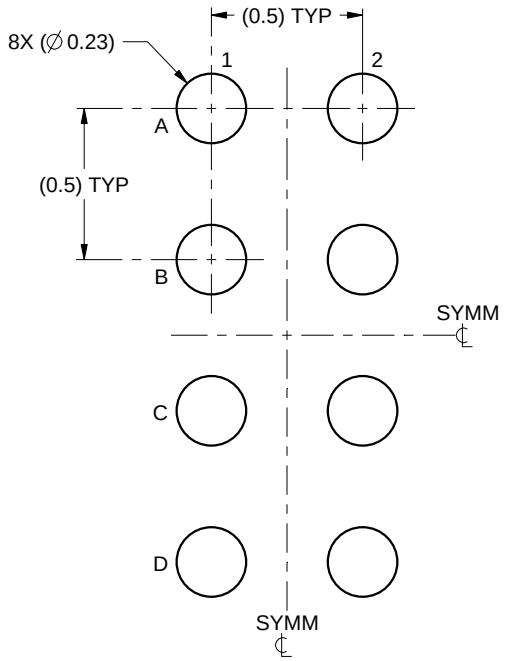

LAND PATTERN EXAMPLE
SCALE:40X

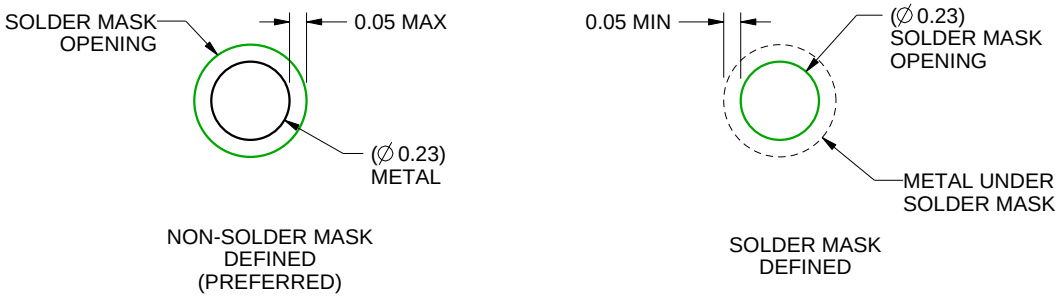

SOLDER MASK DETAILS
NOT TO SCALE

4223082/A 07/2016

NOTES: (continued)

3. Final dimensions may vary due to manufacturing tolerance considerations and also routing constraints.
   For more information, see Texas Instruments literature number SNVA009 (www.ti.com/lit/snva009).

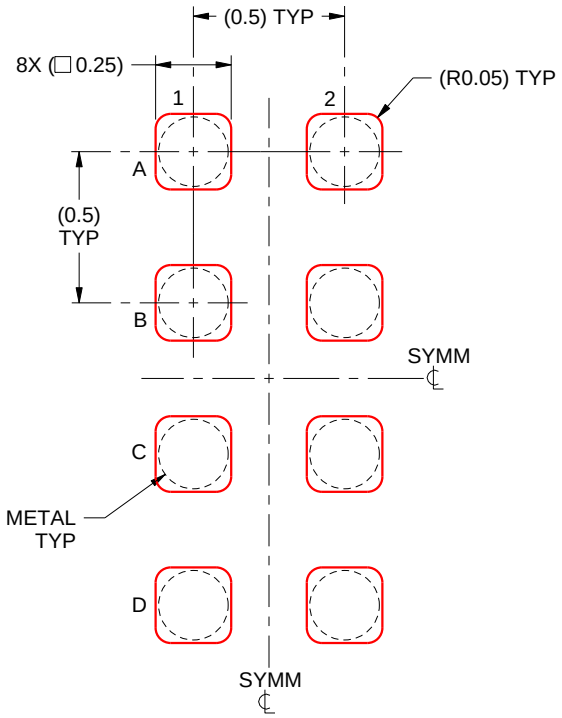

SOLDER PASTE EXAMPLE
BASED ON 0.1 mm THICK STENCIL
SCALE:40X

4223082/A 07/2016

NOTES: (continued)

4. Laser cutting apertures with trapezoidal walls and rounded corners may offer better paste release.

重要なお知らせと免責事項

TI は、技術データと信頼性データ (データシートを含みます)、設計リソース (リファレンス デザインを含みます)、アプリケーションや設計に関する各種アドバイス、Web ツール、安全性情報、その他のリソースを、欠陥が存在する可能性のある「現状のまま」提供しており、商品性および特定目的に対する適合性の黙示保証、第三者の知的財産権の非侵害保証を含むいかなる保証も、明示的または黙示的にかかわらず拒否します。

これらのリソースは、TI 製品を使用する設計の経験を積んだ開発者への提供を意図したものです。(1) お客様のアプリケーションに適した TI 製品の選定、(2) お客様のアプリケーションの設計、検証、試験、(3) お客様のアプリケーションに該当する各種規格や、その他のあらゆる安全性、セキュリティ、規制、または他の要件への確実な適合に関する責任を、お客様のみが単独で負うものとします。

上記の各種リソースは、予告なく変更される可能性があります。これらのリソースは、リソースで説明されている TI 製品を使用するアプリケーションの開発の目的でのみ、TI はその使用をお客様に許諾します。これらのリソースに関して、他の目的で複製することや掲載することは禁止されています。TI や第三者の知的財産権のライセンスが付与されている訳ではありません。お客様は、これらのリソースを自身で使用した結果発生するあらゆる申し立て、損害、費用、損失、責任について、TI およびその代理人を完全に補償するものとし、TI は一切の責任を拒否します。

TI の製品は、 TI の販売条件 、 TI の総合的な品質ガイドライン 、 ti.com または TI 製品などに関連して提供される他の適用条件に従い提供されます。TI がこれらのリソースを提供することは、適用される TI の保証または他の保証の放棄の拡大や変更を意味するものではありません。 TI がカスタム、またはカスタマー仕様として明示的に指定していない限り、TI の製品は標準的なカタログに掲載される汎用機器です。

お客様がいかなる追加条項または代替条項を提案する場合も、TI はそれらに異議を唱え、拒否します。

Copyright © 2026, Texas Instruments Incorporated

最終更新日：2025 年 10 月