TUSB216 USB 2.0 高速シグナル・コンディショナ、BC 1.2 コントローラ付き

1 特長

- 広い電源電圧範囲：2.3～6.5V
- USB 切断時およびシャットダウン時の非常に低い消費電力
- USB 2.0 High Speed 信号のコンディショニングを提供
- USB 2.0、OTG 2.0、BC 1.2 に対応
- Low-Speed、Full-Speed、High-Speed 信号処理のサポート
- BC 1.2 CDP バッテリ充電コントローラを内蔵
- 特定のホストやデバイスに非依存
- 最大 5m のケーブルをサポート
  - 外付けのプルダウン抵抗により 4 つの信号ブースト (エッジ・ブーストと DC ブースト) 設定を選択可能
  - プルアップまたはプルダウンで選択可能な 3 つの RX 感度設定により、損失が大きいアプリケーションの ISI ジッタを補償
- 2 つの TUSB216 デバイスを使って最大 10m のケーブル長に対応
- スケーラブルなソリューション - 損失が大きいアプリケーションに対応するため、デバイスをデイジー・チェーン接続可能
- TUSB211A、212、214、217A (3.3V) とピン互換

2 アプリケーション

- ラップトップ、デスクトップまたはドッキング・ステーション
- 携帯電子機器
- タブレット
- 携帯電話
- テレビ
- アクティブ・ケーブル、延長ケーブル、バックプレーン

3 概要

TUSB216 は第 3 世代 USB 2.0 High Speed 信号コンディショナーで、伝送チャネルでの AC 損失 (容量性負荷による) および DC 損失 (抵抗損失による) を補償するように設計されています。

TUSB216 には、エッジ・ブースタにより USB 2.0 High Speed 信号の遷移エッジを高速化し、DC ブースト機能により静的電圧レベルを上げる特許取得済みの設計が採用されています。

また、TUSB216 はプリイコライゼーション機能を備えているため、レシーバ感度を高め、長いケーブルを使用するアプリケーションで ISI (符号間干渉) ジッタを補償できます。USB Low Speed および Full Speed 信号特性は、TUSB216 による影響を受けません。

TUSB216 は、パケット・タイミングを変更せず、また、伝搬遅延やレイテンシを追加せずに、信号品質を向上させることができます。

TUSB216 により、最長 5 メートルのケーブルを使用したシステムで、USB 2.0 High Speed 近端アイ・コンプライアンスに合格することが可能になります。

TUSB216 は USB On-The-Go (OTG) および Battery Charging (BC 1.2) プロトコルにも対応しています。内蔵の BC 1.2 バッテリ充電コントローラは、制御ピンを使って有効化できます。

製品情報

部品番号 (1)	パッケージ(2)	動作温度 (T_A) ℃	パッケージ サイズ (3)
TUSB216	RWB (X2QFN、12)	0～70	1.6mm × 1.6mm
TUSB216I		-40～85	
TUSB216-Q1		-40～105	

(1) 製品比較表を参照してください。
(2) 詳細については、セクション 11 を参照してください。
(3) パッケージ サイズ (長さ×幅) は公称値であり、該当する場合はピンも含まれます。

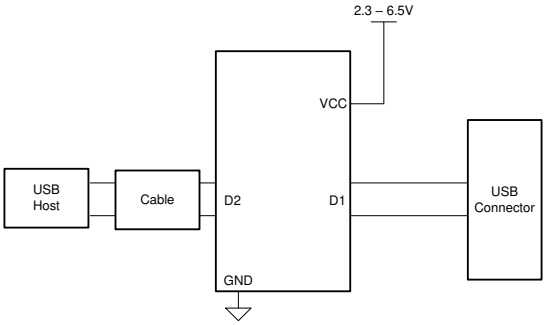

概略回路図

このリソースの元の言語は英語です。 翻訳は概要を便宜的に提供するもので、自動化ツール (機械翻訳) を使用していることがあり、TI では翻訳の正確性および妥当性につきましては一切保証いたしません。 実際の設計などの前には、ti.com で必ず最新の英語版をご参照くださいますようお願いいたします。

Table of Contents

1 特長..... 1
2 アプリケーション..... 1
3 概要..... 1
4 Device Comparison..... 2
5 Pin Configuration and Functions..... 3
6 Specifications..... 5
6.1 Absolute Maximum Ratings..... 5
6.2 ESD Ratings..... 5
6.3 Recommended Operating Conditions..... 5
6.4 Thermal Information..... 5
6.5 Electrical Characteristics..... 6
6.6 Switching Characteristics..... 7
6.7 Timing Requirements..... 8
7 Detailed Description..... 9
7.1 Overview..... 9
7.2 Functional Block Diagram..... 9
7.3 Feature Description..... 9
7.4 Device Functional Modes..... 9
7.5 TUSB216 Registers..... 10
8 Application and Implementation..... 14
8.1 Application Information..... 14
8.2 Typical Application..... 14
8.3 Power Supply Recommendations..... 23
8.4 Layout..... 23
9 Device and Documentation Support..... 24
9.1 ドキュメントの更新通知を受け取る方法..... 24
9.2 サポート・ リソース..... 24
9.3 Trademarks..... 24
9.4 静電気放電に関する注意事項..... 24
9.5 用語集..... 24
10 Revision History..... 24
11 Mechanical, Packaging, and Orderable Information..... 25

4 Device Comparison

	TUSB211A	TUSB212	TUSB214	TUSB216	TUSB217A
Industrial Variant Available	Y	Y	Y	Y	Y
Automotive Variant Available	Y	Y	Y	Y	Y
Supply (V)	2.3 to 6.5	3.3	3.3	2.3 to 6.5	2.3 to 6.5
DC Boost	Tandem with AC Boost	3 levels	3 levels	Tandem with AC Boost	Tandem with AC Boost
I2C Control	N	Y	Y	Y	Y
RX pre-equalization for ISI compensation	N/A	N/A	N/A	3 levels	3 levels
Charging Downstream Port (CDP) controller	N/A	N/A	Always ON	Pin Controlled	Always ON. Dynamically selected by DCP/CDP pin
Dedicated Charging Port (DCP) controller	N/A	N/A	N/A	N/A	Always ON. Dynamically selected by DCP/CDP pin
Cable length compensation for near-end high-speed eye mask Compliance (pre-channel before redriver/post-channel after redriver) (meter - gauge)	6/3 - 28AWG (10 - 24AWG with one redriver on each end)	4/2 - 28AWG	4/2 - 28AWG	6/3 - 28AWG (10 - 24AWG with one redriver on each end)	6/3 - 28AWG (10 - 24AWG with one redriver on each end)
Cable length compensation for far-end high-speed eye mask Compliance (pre-channel before redriver/post-channel after redriver) (meter - gauge)	10/8 - 26AWG (10 - 28AWG with one redriver on each end)	8/6 - 28AWG	8/6 - 28AWG	10/8 - 26AWG (10 - 28AWG with one redriver on each end)	10/8 - 26AWG (10 - 28AWG with one redriver on each end)

Copyright © 2023 Texas Instruments Incorporated

5 Pin Configuration and Functions

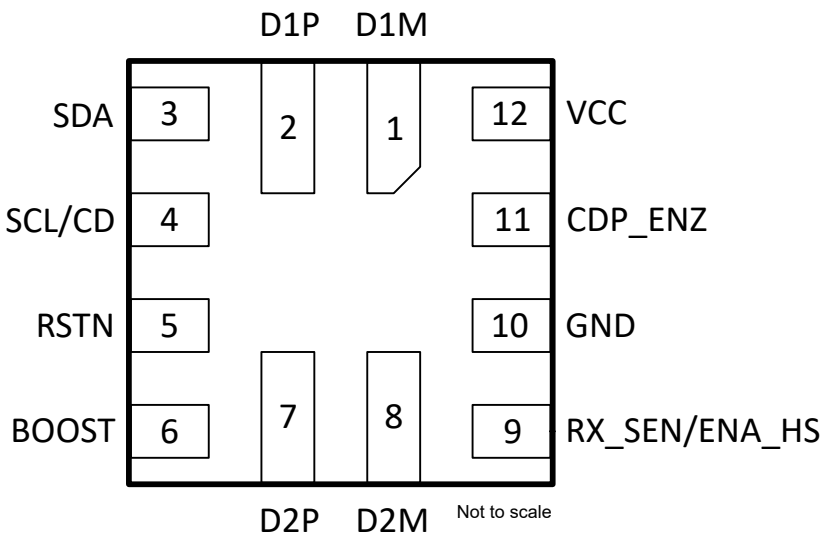

図 5-1. TUSB216 RWB Package, 12-Pin X2QFN (Top View)

表 5-1. Pin Functions

PIN		TYPE[1]	INTERNAL PULLUP/PULLDOWN	DESCRIPTION
NAME	NO.			
BOOST	6	I	N/A	USB High-speed boost select via external pull down resistor. Both edge boost and DC boost are controlled by a single pin in non-I2C mode. In I2C mode edge boost and DC boost can be individually controlled. Sampled upon power up. Does not recognize real time adjustments. Auto selects BOOST LEVEL = 3 when left floating.
CDP_ENZ	11	I	500 kΩ PU	Set CDP_ENZ is low to enable BC 1.2 CDP controller
RX_SEN[3]/ENA_HS	9	I/O	N/A	In I2C mode: Reserved for TI test purpose. In non-I2C mode: At reset: 3-level input signal RX_SEN. USB High-speed RX Sensitivity Setting to Compensate ISI Jitter H (pin is pulled high) – high RX sensitivity (high loss channel) M (pin is left floating) – medium RX sensitivity (medium loss channel) L (pin is pulled low) – low RX sensitivity (low loss channel) After reset: Output signal ENA_HS. Flag indicating that channel is in High-speed mode. Asserted upon: 1. Detection of USB-IF High-speed test fixture from an unconnected state followed by transmission of USB TEST_PACKET pattern. 2. Squelch detection following USB reset with a successful HS handshake [HS handshake is declared to be successful after single chirp J chirp K pair where each chirp is within 18 µs – 128 µs].

表 5-1. Pin Functions (続き)

PIN		TYPE[1]	INTERNAL PULLUP/PULLDOWN	DESCRIPTION
NAME	NO.			
D2P	7	I/O	N/A	USB High-speed positive port.
D2M	8	I/O	N/A	USB High-speed negative port.
GND	10	P	N/A	Ground
D1M	1	I/O	N/A	USB High-speed negative port..
D1P	2	I/O	N/A	USB High-speed positive port.
SDA[2]	3	I/O	500 kΩ PU 1.8 MΩ PD	I2C Mode: Bidirectional I2C data pin [7-bit I2C slave address = 0x2C]. In non I2C mode: Reserved for TI test purpose.
VCC	12	P	N/A	Supply power
RSTN	5	I	500 kΩ PU 1.8 MΩ PD	Device disable/enable. Low – Device is at reset and in shutdown, and High - Normal operation. Recommend 0.1-µF external capacitor to GND to ensure clean power on reset if not driven. If the pin is driven, it must be held low until the supply voltage for the device reaches within specifications.
SCL[2]/CD	4	I/O	When RSTN asserted there is a 500 kΩ PD	In I2C mode: I2C clock pin [I2C address = 0x2C]. Non I2C mode: After reset: Output CD. Flag indicating that a USB device is attached (connection detected). Asserted from an unconnected state upon detection of DP or DM pull-up resistor. De-asserted upon detection of disconnect.

(1) I = input, O = output, P = power
(2) Pull-up resistors for SDA and SCL pins in I^2C mode should be $R_{Pull\text{-}up}$ (depending on I2C bus voltage). If both SDA and SCL are pulled up at power-up the device enters into I^2C mode.
(3) Pull-down and pull-up resistors for RX_SEN pin must follow R_{RXSEN1} and R_{RXSEN2} resistor recommendations in non I^2C mode.

Copyright © 2023 Texas Instruments Incorporated

6 Specifications

6.1 Absolute Maximum Ratings

Over operating free-air temperature range (unless otherwise noted) [(1)]

		MIN	MAX	UNIT
Supply voltage range	VCC	–0.3	7	V
Voltage range USB data	DxP, DxM	–0.3	5.5	V
Voltage range on BOOST pin	BOOST	-0.3	1.98	V
Voltage range other pins	RX_SEN, CDP_ENZ, SDA, SCL, RSTN	-0.3	5.5	V
Storage temperature, T_{stg}		–65	150	°C
Maximum junction temperature, $T_{J\ (max)}$			125	°C

(1) *Operation outside the Absolute Maximum Ratings may cause permanent device damage. Absolute Maximum Ratings do not imply functional operation of the device at these or any other conditions beyond those listed under Recommended Operating Conditions. If used outside the Recommended Operating Conditions but within the Absolute Maximum Ratings, the device may not be fully functional, and this may affect device reliability, functionality, performance, and shorten the device lifetime.*

6.2 ESD Ratings

			VALUE	UNIT
$V_{(ESD)}$	Electrostatic discharge	Human-body model (HBM), per ANSI/ESDA/JEDEC JS-001[(1)]	±2000	V
		Charged-device model (CDM), per ANSI/ESDA/JEDEC JS-002[(2)]	±750	

(1) JEDEC document JEP155 states that 500-V HBM allows safe manufacturing with a standard ESD control process.
(2) JEDEC document JEP157 states that 250-V CDM allows safe manufacturing with a standard ESD control process.

6.3 Recommended Operating Conditions

over operating free-air temperature range (unless otherwise noted)

		MIN	NOM	MAX	UNIT
V_{CC}	Supply voltage	2.3	5	6.5	V
T_A	Operating free-air temperature (Standard)	0		70	°C
T_J	Junction temperature (Standard)			85	°C
V_{I2C_BUS}	I2C Bus Voltage	1.62		3.6	V
DxP, DxM	Voltage range USB data	0		3.6	V
BOOST	Voltage range BOOST pin	0		1.98	V
DIGITAL	Voltage range other pins (SCL, SDA, RSTN, CDP_ENZ)	0		3.6	V
RX_SEN	Voltage range RX_SEN pin	0		5.0	V

6.4 Thermal Information

THERMAL METRIC [(1)]		RWB (X2QFN) 12 PINS	UNIT
$R_{\theta JA}$	Junction-to-ambient thermal resistance	137.4	°C/W
$R_{\theta JC(top)}$	Junction-to-case (top) thermal resistance	62	°C/W
$R_{\theta JB}$	Junction-to-board thermal resistance	67.2	°C/W
ψ_{JT}	Junction-to-top characterization parameter	1.9	°C/W
ψ_{JB}	Junction-to-board characterization parameter	67.3	°C/W
$R_{\theta JC(bot)}$	Junction-to-case (bottom) thermal resistance	N/A	°C/W

(1) For more information about traditional and new thermal metrics, see the *Semiconductor and IC Package Thermal Metrics* application report, SPRA953.

6.5 Electrical Characteristics

Over operating free-air temperature range (unless otherwise noted)

PARAMETER		TEST CONDITIONS	MIN	TYP (1)	MAX	UNIT
POWER						
I_{ACTIVE_HS}	High Speed Active Current	USB channel = HS mode. 480 Mbps traffic. V_{CC} supply stable, with Boost = Max		22	36	mA
I_{IDLE_HS}	High Speed Idle Current	USB channel = HS mode, no traffic. V_{CC} supply stable, Boost = Max		22	36	mA
$I_{HS_SUPSPEND}$	High Speed Suspend Current	USB channel = HS Suspend mode. V_{CC} supply stable		0.75	1.4	mA
I_{FS}	Full-Speed Current	USB channel = FS mode, 12 Mbps traffic, V_{cc} supply stable		0.75	1.4	mA
$I_{DISCONN}$	Disconnect Power	Host side application. No device attachment.		0.80	1.4	mA
I_{SHUTDN}	Shutdown Power	RSTN driven low, V_{CC} supply stable		60	115	µA
CONTROL PIN LEAKAGE						
I_{LKG_FS}	Pin failsafe leakage current for SDA, RSTN	V_{CC} = 0 V, pin at $V_{IH, max}$		10	15	µA
I_{LKG_FS}	Pin failsafe leakage current for RX_SEN	V_{CC} = 0 V, pin at $V_{IH, max}$		6	15	µA
I_{LKG_FS}	Pin failsafe leakage current for SCL	V_{CC} = 0 V, pin at $V_{IH, max}$			70	nA
INPUT RSTN						
V_{IH}	High level input voltage		1.5		3.6	V
V_{IL}	Low-level input voltage		0		0.5	V
I_{IH}	High level input current	V_{IH} = 3.6 V, R_{PU} enabled			±15	µA
I_{IL}	Low level input current	V_{IL} = 0V, R_{PU} enabled			±20	µA
INPUT DIGITAL						
V_{IH}	High level input voltage (CDP_ENZ)		1.5		3.6	V
V_{IL}	Low-level input voltage (CDP_ENZ)		0		0.5	V
I_{IL}	Low level input current	V_{IL} = 0V			±20	µA
I_{IH}	High level input current	V_{IH} = 3.6 V			±15	µA
INPUT RX_SEN (3-level input, for mid level leave pin floating)						
$V_{IH(Max)}$	Maximum High level input voltage	VCC = 2.3V to 6.5V			5.0	V
$V_{IH(Min)}$	Minimum High level input voltage	VCC > 4.5V	3.3			V
		VCC = 2.3V to 4.5V (% of VCC)	75			%
V_{IL}	Low level input voltage	VCC > 4.5V			0.75	V
		VCC = 2.3V to 4.5V (% of VCC)			15	%
INPUT BOOST						
R_{BOOST_LVL0}	External pulldown resistor for BOOST Level 0				160	Ω
R_{BOOST_LVL1}	External pulldown resistor for BOOST Level 1		1.5	1.8	2	kΩ
R_{BOOST_LVL2}	External pulldown resistor for BOOST Level 2		3.4	3.6	3.96	kΩ
R_{BOOST_LVL3}	External pulldown resistor for BOOST Level 3 to remove upper limit for resistor value, can be left open		7.5			kΩ
OUTPUTS CD, ENA_HS						
V_{OH}	High level output voltage for CD and ENA_HS	I_O = –50 µA, VCC >= 3.0V	2.5			V
V_{OH}	High level output voltage for CD	I_O = –25 µA, VCC = 2.3V	1.7			V

Copyright © 2023 Texas Instruments Incorporated

6.5 Electrical Characteristics (続き)

Over operating free-air temperature range (unless otherwise noted)

PARAMETER		TEST CONDITIONS	MIN	TYP (1)	MAX	UNIT
V_{OH}	High level output voltage for ENA_HS	I_O = –25 µA, VCC = 2.3V	1.8			V
V_{OL}	Low level output voltage for CD and ENA_HS	I_O = 50 µA			0.3	V
I2C						
C_{I2C_BUS}	I^2C Bus Capacitance		4		150	pF
I_{OL}	I^2C open drain output current	V_{OL} = 0.4V	1.5			mA
V_{IL}	2.3V<= VCC<= 4.3V, V_{I2C_BUS} = 1.8V +/-10%	$R_{Pull\text{-}up}$ =1.6kΩ to 2.5kΩ, % of V_{I2C_BUS}			25	%
V_{IL}	V_{I2C_BUS} = 3.3V +/-10%	$R_{Pull\text{-}up}$ =2.8kΩ to 7kΩ, % of V_{I2C_BUS}			25	%
V_{IH}	2.3V<= VCC<= 4.3V, V_{I2C_BUS} = 1.8V +/-10%	$R_{Pull\text{-}up}$ =1.6kΩ to 2.5kΩ, % of V_{I2C_BUS}	80			%
V_{IH}	V_{I2C_BUS} = 3.3V +/-10%	$R_{Pull\text{-}up}$ =2.8kΩ to 7kΩ, % of V_{I2C_BUS}	75			%
$R_{Pull\text{-}up}$	V_{I2C_BUS} = 1.8V +/-10%		1.6	2	2.5	kΩ
$R_{Pull\text{-}up}$	V_{I2C_BUS} = 3.3V +/-10%		2.8	4.7	7	kΩ
SCL Frequency					400	kHz
DxP, DxM						
C_{IO_DXX}	Capacitance to GND	Measured with VNA at 240 MHz, V_{CC} supply stable, Redriver off		2.5		pF

(1) All typical values are at V_{CC} = 5 V, and T_A = 25°C.

6.6 Switching Characteristics

Over operating free-air temperature range (unless otherwise noted)

PARAMETER		TEST CONDITIONS	MIN	TYP (1)	MAX	UNIT
DxP, DxM USB Signals						
F_{BR_DXX}	Bit Rate	USB channel = HS mode. 480 Mbps traffic. V_{CC} supply stable			480	Mbps
t_{R/F_DXX}	Rise/Fall time		100			ps

(1) All typical values are at V_{CC} = 5 V, and T_A = 25°C.

6.7 Timing Requirements

		MIN	NOM	MAX	UNIT
POWER UP TIMING					
T_{RSTN_PW}	Minimum width to detect a valid RSTN signal assert when the pin is actively driven low	100			µs
T_{STABLE}	VCC must be stable before RSTN de-assertion	300			µs
T_{READY}	Maximum time needed for the device to be ready after RSTN is de-asserted.			500	µs
T_{RAMP}	V_{CC} ramp time			100	ms
T_{RAMP}	V_{CC} ramp time	0.2			ms
I2C (STD)					
t_{SUSTO}	Stop setup time, SCL (T_r=600ns-1000ns), SDA (T_f=6.5ns-106.5ns), 100kHz STD	4			µs
t_{HDSTA}	Start hold time, SCL (Tr=600ns-1000ns), SDA (Tf=6.5ns-106.5ns), 100kHz STD	4			µs
t_{SUSTA}	Start setup time, SCL (T_r=600ns-1000ns), SDA (T_f=6.5ns-106.5ns), 100kHz STD	4.7			µs
t_{SUDAT}	Data input or False start/stop, setup time, SCL (T_r=600ns-1000ns), SDA (T_f=6.5ns-106.5ns), 100kHz STD	250			ns
t_{HDDAT}	Data input or False start/stop, hold time, SCL (T_r=600ns-1000ns), SDA (T_f=6.5ns-106.5ns), 100kHz STD	5			µs
t_{BUF}	Bus free time between START and STOP conditions	4.7			µs
t_{LOW}	Low period of the I2C clock	4.7			µs
t_{HIGH}	High period of the I2C clock	4			µs
t_F	Fall time of both SDA and SCL signals			300	ns
t_R	Rise time of both SDA and SCL signals			1000	ns
I2C (FM)					
t_{SUSTO}	Stop setup time, SCL (T_r=180ns-300ns), SDA (T_f=6.5ns-106.5ns), 400 kHz FM	0.6			µs
t_{HDSTA}	Start hold time, SCL (T_r=180ns-300ns), SDA (T_f=6.5ns-106.5ns), 400 kHz FM	0.6			µs
t_{SUSTA}	Start setup time, SCL (T_r=180ns-300ns), SDA (T_f=6.5ns-106.5ns), 400 kHz FM	0.6			µs
t_{SUDAT}	Data input or False start/stop, setup time, SCL (T_r=180ns-300ns), SDA (T_f=6.5ns-106.5ns), 400 kHz FM	100			ns
t_{HDDAT}	Data input or False start/stop, hold time, SCL (T_r=180ns-300ns), SDA (T_f=6.5ns-106.5ns), 400 kHz FM	0			µs
t_{BUF}	Bus free time between START and STOP conditions	1.3			µs
t_{LOW}	Low period of the I2C clock	1.3			µs
t_{HIGH}	High period of the I2C clock	0.6			µs
t_F	Fall time of both SDA and SCL signals			300	ns
t_R	Rise time of both SDA and SCL signals			300	ns

Copyright © 2023 Texas Instruments Incorporated

7 Detailed Description

7.1 Overview

The TUSB216 is a USB High-Speed (HS) signal conditioner designed to compensate for ISI signal loss in a transmission channel. TUSB216 has a patented design for USB Low Speed (LS) and Full Speed (FS) signals. It does not alter the signal characteristics. HS signals are compensated. The design is compatible with USB On-The-Go (OTG) and Battery Charging (BC) specifications.

Programmable signal gain through an external resistor permits fine tuning device performance to optimize signals. This helps pass USB HS electrical compliance tests at the connector. Additional RX sensitivity, tuned by external pull-up resistor and pull-down resistor, allows to overcome attenuation in cables. The TUSB216 allows application in series to cover longer distances, or high loss transmission paths. A maximum of 4 devices can be daisy-chained.

7.2 Functional Block Diagram

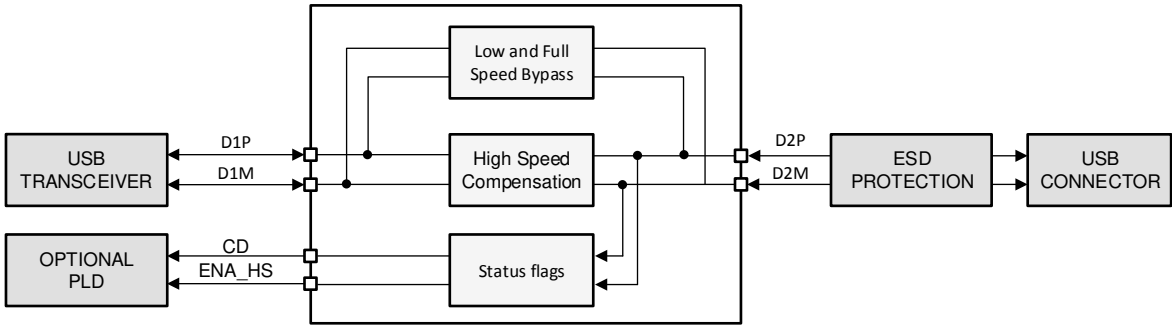

Copyright © 2018, Texas Instruments Incorporated

7.3 Feature Description

7.3.1 High-Speed Boost

The high-speed booster (combination of edge boost and DC boost) improves the eye width for USB2.0 high-speed signals. It is direction independent and by that is compatible to OTG systems. The BOOST pin is configuring the booster strength with different values of pull down resistors to set 4 levels of boosts, alternatively the boost level can be set through the I2C register according to セクション 7.4.6. Internal circuitry of the signal conditioner reduces possible overshoot.

7.3.2 RX Sensitivity

The RX_SEN pin is a tri-level pin. It is used to set the gain of the device according to system channel loss. RX sensitivity can be increased to recover incoming signals with low vertical eye opening to be able to boost weak signals and helps overcoming high attenuation.

7.4 Device Functional Modes

7.4.1 Low-Speed (LS) Mode

TUSB216 automatically detects a LS connection and does not enable signal compensation. CD pin is asserted high but ENA_HS will be low.

7.4.2 Full-Speed (FS) Mode

TUSB216 automatically detects a FS connection and does not enable signal compensation. CD pin is asserted high but ENA_HS will be low

7.4.3 High-Speed (HS) Mode

TUSB216 automatically detects a HS connection and will enable signal compensation as determined by the configuration of the RX_SEN pin and the external pull down resistance on its BOOST pin.

CD pin and ENA_HS pin are asserted high when high-speed boost is active.

7.4.4 High-Speed Downstream Port Electrical Compliance Test Mode

TUSB216 will detect HS compliance test fixture and enter downstream port high-speed eye diagram test mode. CD pin will be low and ENA_HS pin is asserted high when TUSB216 is in HS eye compliance test mode.

If RSTN pin is asserted low and de-asserted high while TUSB216 is operating in HS functional mode, TUSB216 will transition to HS eye compliance test mode and CD asserts low and ENA_HS remains high. When this occurs signal compensation is enabled.

7.4.5 Shutdown Mode

TUSB216 can be disabled when its RSTN pin is asserted low. DP, DM traces are continuous through the device in shutdown mode. The USB channel is still fully operational, but there is neither signal compensation, nor any indication from the CD pin as to the status of the channel.

表 7-1. CD and ENA_HS Pins in Different Modes

MODE	CD	ENA_HS
Low-speed	HIGH	LOW
Full-speed	HIGH	LOW
High-speed	HIGH	HIGH
High-speed downstream port electrical test	LOW	HIGH
Shutdown	LOW	LOW

7.4.6 I^{2}C Mode

TUSB216 supports 100 and 400 kHz I2C for device configuration, status read back and test purposes. For detail electrical and functional specifications refer to I2C Bus Specification – STANDARD and FAST MODE. This controller is enabled after SCL and SDA pins are sampled high shortly after return from shutdown. In this mode, the CSR can be accessed by I2C read/write transaction to 7-bit slave address 0x2C. It is advised to set CFG_ACTIVE bit before changing values. This halts the FSM, and reset it after all changes are made. This ensure proper startup into high-speed mode.

7.4.7 BC 1.2 Battery Charging Controller

The TUSB216 main function is a signal conditioner offering the boost and pre-equalization features to the incoming DP/DM signals. For applications in which USB host or hub does not provide USB BC charging controller functionality, the TUSB216 can perform this task when CDP_ENZ is low and BC 1.2 CDP Controller is enabled. When battery charging CDP controller feature is enabled (CDP_ENZ=low) TUSB216 supports CDP charging downstream port functionality. CDP_ENZ has an internal pull up when the pin is left unconnected CDP controller will be disabled.

表 7-2. TUSB216 Battery Charging Controller Modes

Pin 11 (CDP_ENZ)	CDP
High	NO
Low	YES

7.5 TUSB216 Registers

表 7-3 lists the memory-mapped registers for the TUSB216 registers. All register offset addresses not listed in 表 7-3 should be considered as reserved locations and the register contents should not be modified.

表 7-3. TUSB216 Registers

Offset	Acronym	Register Name	Section
0x1	EDGE_BOOST	This register is setting EDGE BOOST level.	Go
0x3	CONFIGURATION	This register is selecting device mode.	Go
0xE	DC_BOOST	This register is setting DC BOOST level.	Go

Copyright © 2023 Texas Instruments Incorporated

表 7-3. TUSB216 Registers (続き)

Offset	Acronym	Register Name	Section
0x25	RX_SEN	This register is setting RX Sensitivity level.	Go

Complex bit access types are encoded to fit into small table cells. 表 7-4 shows the codes that are used for access types in this section.

表 7-4. TUSB216 Access Type Codes

Access Type	Code	Description
Read Type		
RH	H R	Set or cleared by hardware Read
Write Type		
W	W	Write
Reset or Default Value		
-n		Value after reset or the default value

7.5.1 EDGE_BOOST Register (Offset = 0x1) [reset = X]

EDGE_BOOST is shown in 図 7-1 and described in 表 7-5.

Return to Summary Table.

This register is setting EDGE BOOST level.

図 7-1. EDGE_BOOST Register

7	6	5	4	3	2	1	0
ACB_LVL				RESERVED			
RH/W-X				RH/W-X			

表 7-5. EDGE_BOOST Register Field Descriptions

Bit	Field	Type	Reset	Description
7-4	ACB_LVL	RH/W	X	XXXXb (sampled at startup from BOOST pin) 0000b to 1111b range 0x0 = BOOST PIN LEVEL 0 (lowest edge boost setting) 0x3 = BOOST PIN LEVEL 1 0x6 = BOOST PIN LEVEL 2 0xA = BOOST PIN LEVEL 3 0xF = (highest edge boost setting)
3-0	RESERVED	RH/W	X	These bits are reserved bits and set by hardware at reset. When this register is modified the software should first read these reserved bits and rewrite with the same values

7.5.2 CONFIGURATION Register (Offset = 0x3) [reset = X]

CONFIGURATION is shown in 図 7-2 and described in 表 7-6.

Return to Summary Table.

This register is selecting device mode.

図 7-2. CONFIGURATION Register

7	6	5	4	3	2	1	0
RESERVED							CFG_ACTIVE
RH/W-X							RH/W-0x1

表 7-6. CONFIGURATION Register Field Descriptions

Bit	Field	Type	Reset	Description
7-1	RESERVED	RH/W	X	These bits are reserved bits and set by hardware at reset. When this register is modified the software should first read these reserved bits and rewrite with the same values
0	CFG_ACTIVE	RH/W	0x1	Configuration mode After reset, if I2C mode is true (SCL and SDA are both pulled high) set the bit to get into configuration mode and clear to return to normal mode. 0x0 = NORMAL MODE 0x1 = CONFIGURATION MODE

7.5.3 DC_BOOST Register (Offset = 0xE) [reset = X]

DC_BOOST is shown in 図 7-3 and described in 表 7-7.

Return to Summary Table.

This register is setting DC BOOST level.

図 7-3. DC_BOOST Register

7	6	5	4	3	2	1	0
RESERVED				DCB_LVL			
RH/W-X				RH/W-X			

表 7-7. DC_BOOST Register Field Descriptions

Bit	Field	Type	Reset	Description
7-4	RESERVED	RH/W	X	These bits are reserved bits and set by hardware at reset. When this register is modified the software should first read these reserved bits and rewrite with the same values
3-0	DCB_LVL	RH/W	X	XXXXb (sampled at startup from BOOST pin) 0000b to 1111b range 0x0 = BOOST PIN LEVEL 0 (lowest dc boost setting) 0x2 = BOOST PIN LEVEL 1 and 2 0x6 = BOOST PIN LEVEL 3 0xF = (highest dc boost setting)

Copyright © 2023 Texas Instruments Incorporated

7.5.4 RX_SEN Register (Offset = 0x25) [reset = X]

RX_SEN is shown in 図 7-4 and described in 表 7-8.

Return to Summary Table.

This register is setting RX Sensitivity level.

図 7-4. RX_SEN Register

7	6	5	4	3	2	1	0
RX_SEN							
RH/W-X							

表 7-8. RX_SEN Register Field Descriptions

Bit	Field	Type	Reset	Description
7-0	RX_SEN	RH/W	X	XXXXb (sampled at startup from RX_SEN pin) 00000000b to 11111111b range 0x0 = RX_SEN LEVEL LOW 0x33 = RX_SEN LEVEL MID 0x66 = RX_SEN LEVEL HIGH 0xFF = (highest setting)

8 Application and Implementation

注

以下のアプリケーション情報は、TI の製品仕様に含まれるものではなく、TI ではその正確性または完全性を保証いたしません。個々の目的に対する製品の適合性については、お客様の責任で判断していただくことになります。お客様は自身の設計実装を検証しテストすることで、システムの機能を確認する必要があります。

8.1 Application Information

The purpose of the TUSB216 is to re-store the signal integrity of a USB High-speed channel up to the USB connector. The loss in signal quality stems from reduced channel bandwidth due to high loss PCB trace and other components that contribute a capacitive load. This can cause the channel to fail the USB near end eye mask. Proper use of the TUSB216 can help to pass this eye mask.

A secondary purpose is to use the CD pin of the TUSB216 to control other blocks on the customer platform, if so desired.

8.2 Typical Application

A typical application for TUSB216 is shown in 図 8-1. In this setup, D2P and D2M face the USB connector while D1P and D1M face the USB host. The orientation may be reversed [that is, D2 faces transceiver and D1 faces connector].

Copyright © 2023 Texas Instruments Incorporated

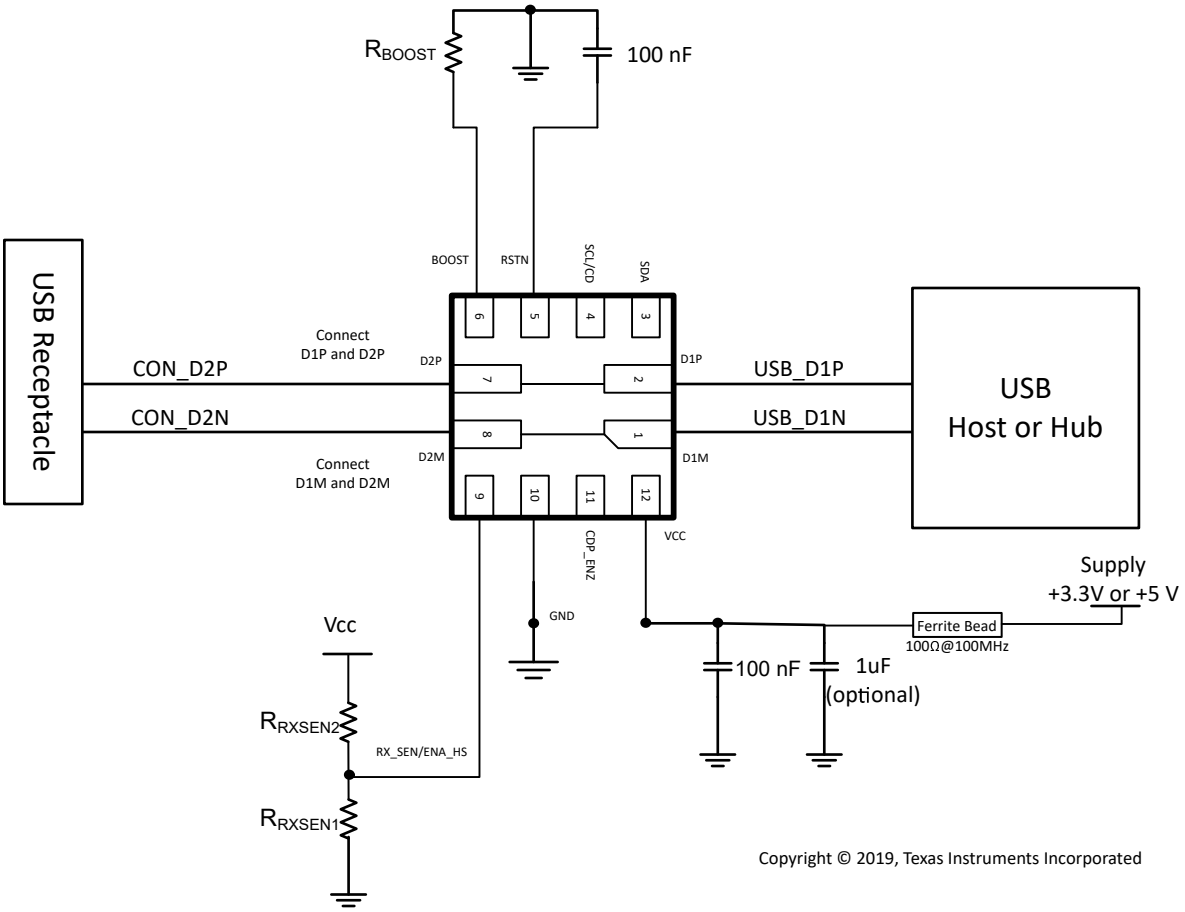

図 8-1. TUSB216 Reference Schematic (Design Example with CDP disabled), CDP_ENZ Can Be Left Floating but an Option for a Decoupling Capacitor of 0.1 µF is Recommended So the Design is Compatible with Older Devices: TUSB211, TUSB212, TUSB214

8.2.1 Design Requirements

TUSB216 requires a valid reset signal as described in the *Power Supply Recommendations* section. The capacitor at RSTN pin is not required if a micro controller drives the RSTN pin according to recommendations.

For this design example, use the parameters shown in 表 8-1, 表 8-2 and 表 8-3.

表 8-1. Design Parameters for 5-V Supply With High Loss System

PARAMETER				VALUE[(1)]
V_{CC}				5 V ±10%
I^2C support required in system (Yes/No)				No
Edge and DC Boost		**R_{BOOST}**	**BOOST Level**	Boost Level 1: R_{BOOST} = 1.8 kΩ
		0-Ω	0	
		1.8 kΩ ±1%	1	
		3.6 kΩ ± 1%	2	
		Do Not Install (DNI)	3	
RX Sensitivity	**R_{RXSEN1}**	**R_{RXSEN2}**	**RX_SEN Level**	High RX Sensitivity Level: R_{RXSEN1} = 37.5 kΩ R_{RXSEN2} = 12.5 kΩ
	22 kΩ - 40 kΩ (27 kΩ typical)	Do Not Install (DNI)	Low	
	Do Not Install (DNI)	Do Not Install (DNI)	Medium	
	37.5 kΩ[(2)]	12.5 kΩ	High	

(1) These parameters are starting values for a high loss system. Further tuning might be required based on specific host or device as well as cable length and loss profile. These settings are not specific to a 5 V supply system could be applicable to 3.3 V supply system as well.
(2) This resistor is needed for a 5 V supply to divide the voltage down so the RX_SEN pin voltage does not exceed 5.0 V.

表 8-2. Design Parameters for 3.3-V Supply With Low to Medium Loss System

PARAMETER				VALUE[(1)]
V_{CC}				3.3 V ±10%
I^2C support required in system (Yes/No)				No
Edge and DC Boost		**R_{BOOST}**	**BOOST Level**	Boost Level 0: R_{BOOST} = 0-Ω
		0-Ω	0	
		1.8 kΩ ±1%	1	
		3.6 kΩ ±1%	2	
		Do Not Install (DNI)	3	
RX Sensitivity	**R_{RXSEN1}**	**R_{RXSEN2}**	**RX_SEN Level**	Medium RX Sensitivity Level: R_{RXSEN1} = DNI R_{RXSEN2} = DNI
	22 kΩ – 40 kΩ (27 kΩ typical)	Do Not Install (DNI)	Low	
	Do Not Install (DNI)	Do Not Install (DNI)	Medium	
	Do Not Install (DNI)	22 kΩ – 40 kΩ (27 kΩ typical)	High	

(1) These parameters are starting values for a low to medium loss system. Further tuning might be required based on specific host or device as well as cable length and loss profile. These settings are not specific to a 3.3 V supply system could be applicable to 5 V supply system as well.

Copyright © 2023 Texas Instruments Incorporated

表 8-3. Design Parameters for 2.3-V to 4.3-V VBAT Supply With Low to Medium Loss System

PARAMETER				VALUE[1]
V_{CC}				2.3 V to 4.3V
I^2C support required in system (Yes/No)				No
Edge and DC Boost		R_{BOOST}	BOOST Level	Boost Level 0: R_{BOOST} = 0-Ω
		0-Ω	0	
		1.8 kΩ ±1%	1	
		3.6 kΩ ±1%	2	
		Do Not Install (DNI)	3	
RX Sensitivity	R_{RXSEN1}	R_{RXSEN2}	RX_SEN Level	Medium RX Sensitivity Level: R_{RXSEN1} = DNI R_{RXSEN2} = DNI
	22 kΩ – 40 kΩ (27 kΩ typical)	Do Not Install (DNI)	Low	
	Do Not Install (DNI)	Do Not Install (DNI)	Medium	
	37.5 kΩ[2]	12.5 kΩ	High	

(1) These parameters are starting values for a low to medium loss system. Further tuning might be required based on specific host or device as well as cable length and loss profile. These settings are not specific to a 2.3 V – 4.3 V supply system could be applicable to 5 V supply system as well.
(2) This resistor is needed for a VBAT supply (2.3 V – 4.3 V) to divide the voltage down so the RX_SEN pin voltage does not exceed 5.0 V.

8.2.2 Detailed Design Procedure

The ideal BOOST setting is dependent upon the signal chain loss characteristics of the target platform. The recommendation is to start with BOOST level 0, and then increment to BOOST level 1, and so on. Same applies to the RX sensitivity setting where it is recommended to plan for the required pads or connections to change boost settings, but to start with RX sensitivity level Low.

In order for the TUSB216 to recognize any change to the BOOST setting, the RSTN pin must be toggled. This is because the BOOST pin is latched on power up and the pin is ignored thereafter.

注

The TUSB216 compensates for extra attenuation in the signal path according to the configuration of the RX_SEN pin. This maximum recommended voltage for this pin is 5 V when selecting the highest RX sensitivity level.

Placement of the device is also dependent on the application goal. 表 8-4 summarizes our recommendations.

表 8-4. Platform Placement Guideline

PLATFORM GOAL	SUGGESTED TUSB216 PLACEMENT
Pass USB Near End Mask at the receptacle	Close to measurement point (connector)
Pass USB Far End Eye Mask at the plug	Close to USB PHY
Cascade multiple TUSB216s to improve device enumeration	Midway between each USB interconnect

表 8-5. Table of Recommended Settings

BOOST and RX_SEN settings [(1)] for channel loss		
Pre-channel cable length (Between USB PHY and TUSB216)	**BOOST**	**RX_SEN**
0-3 meter	Level 0	Medium or High
2-5 meter	Level 1	Medium or High
Post-channel cable length (Between TUSB216 and inter-connect)	**BOOST**	**RX_SEN**
0-2 meter	Level 0	Medium or High
1-4 meter	Level 1	Medium or High

(1) These parameters are starting values for different cable lengths. Further tuning might be required based on specific host or device as well as cable length and loss profile.

8.2.2.1 Test Procedure to Construct USB High-speed Eye Diagram

注

USB-IF certification tests for High-speed eye masks require the *mandated use* of the USB-IF developed test fixtures. These test fixtures do not require the use of oscilloscope probes. Instead they use SMA cables. More information can be found at the USB-IF Compliance Updates Page. It is located under the *Electrical Specifications* section, ID 86 dated March 2013.

The following procedure must be followed before using any oscilloscope compliance software to construct a USB High-speed Eye Mask:

8.2.2.1.1 For a Host Side Application

1. Configure the TUSB216 to the desired BOOST setting
2. Power on (or toggle the RSTN pin if already powered on) the TUSB216
3. Using SMA cables, connect the oscilloscope and the USB-IF host-side test fixture to the TUSB216
4. Enable the host to transmit USB TEST_PACKET
5. Execute the oscilloscope USB compliance software.
6. Repeat the above steps in order to re-test TUSB216 with a different BOOST setting (must reset to change)

8.2.2.1.2 For a Device Side Application

1. Configure the TUSB216 to the desired BOOST setting
2. Power on (or toggle the RSTN pin if already powered on) the TUSB216
3. Connect a USB host, the USB-IF device-side test fixture, and USB device to the TUSB216. Ensure that the USB-IF device test fixture is configured to the ‘INIT’ position
4. Allow the host to enumerate the device
5. Enable the device to transmit USB TEST_PACKET
6. Using SMA cables, connect the oscilloscope to the USB-IF device-side test fixture and ensure that the device-side test fixture is configured to the ‘TEST’ position.
7. Execute the oscilloscope USB compliance software.
8. Repeat the above steps in order to re-test TUSB216 with a different BOOST setting (must reset to change)

Copyright © 2023 Texas Instruments Incorporated

8.2.3 Application Curves

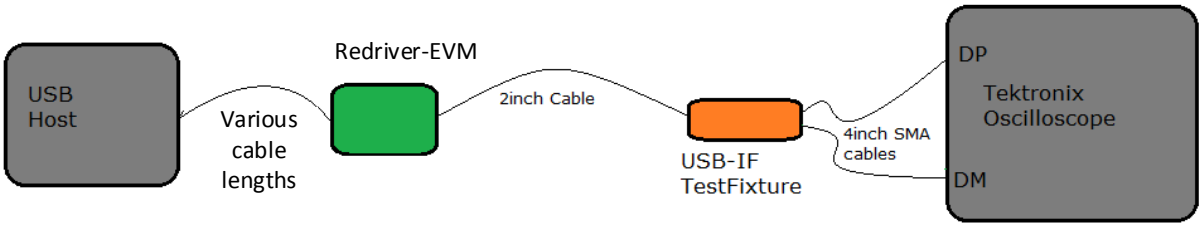

図 8-2. Near End Eye Measurement Set-Up With Pre-Channel Cable

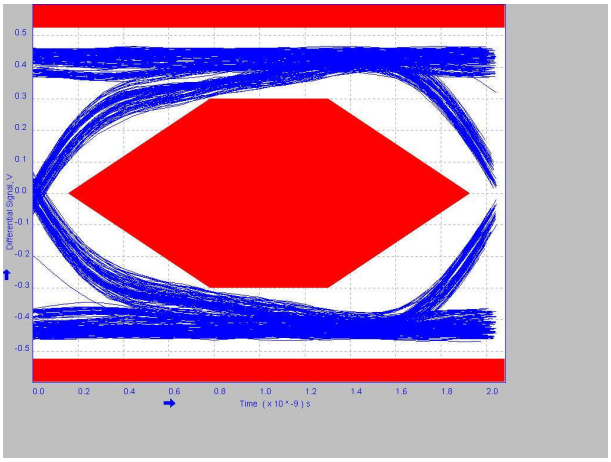

図 8-3. 2 Meter Pre-Channel Without TUSB216

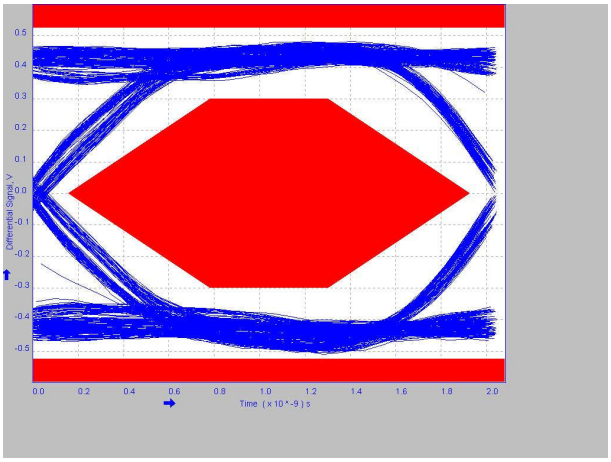

図 8-4. 2 Meter Pre-Channel With TUSB216 BOOST=1 RX_SEN=MED

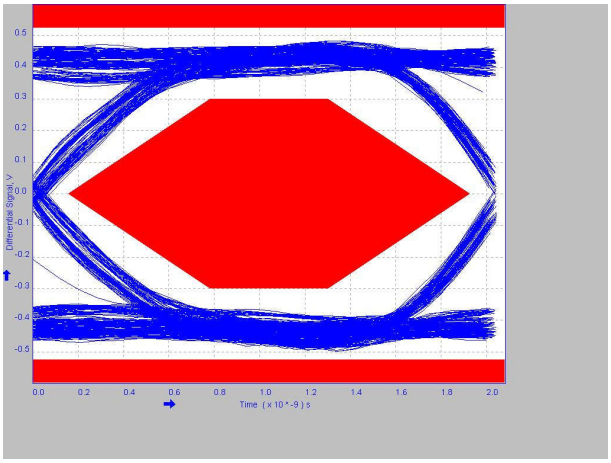

図 8-5. 2 Meter Pre-Channel With TUSB216 BOOST=0 RX_SEN=HIGH

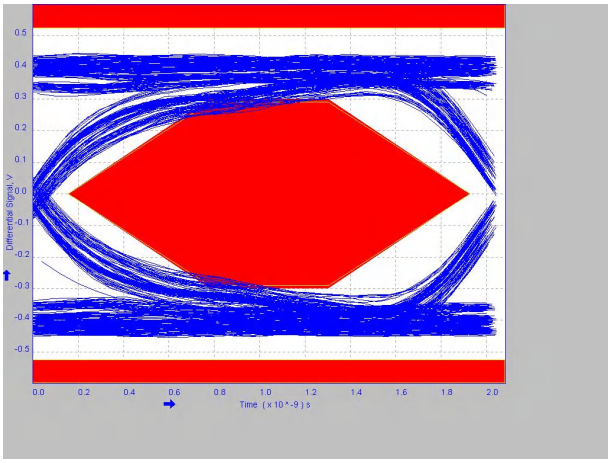

図 8-6. 3 Meter Pre-Channel Without TUSB216

8.2.3 Application Curves (continued)

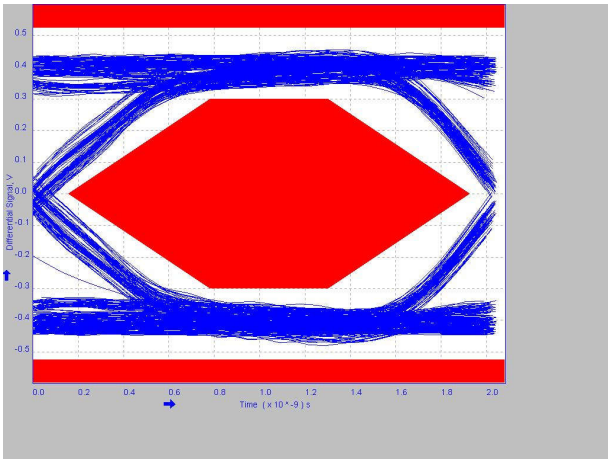

図 8-7. 3 Meter Pre-Channel With TUSB216 BOOST=0 RX_SEN=HIGH

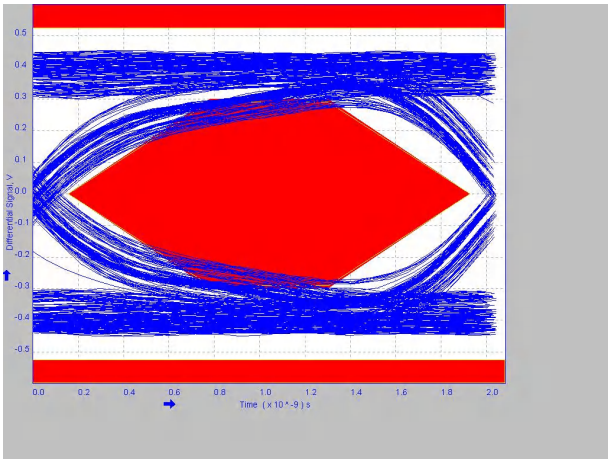

図 8-8. 5 Meter Without TUSB216

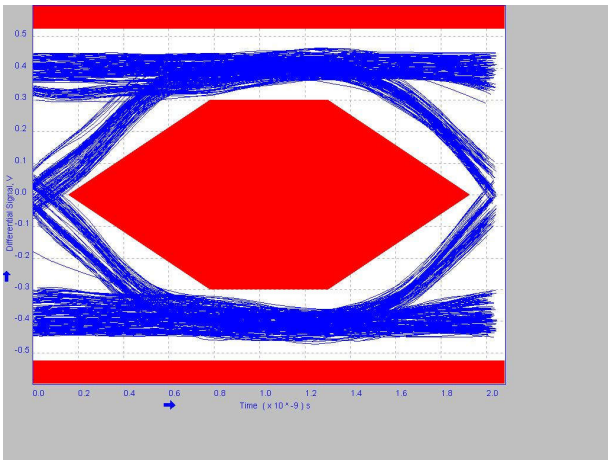

図 8-9. 5 Meter Pre-Channel With TUSB216 BOOST=1 RX_SEN=MED

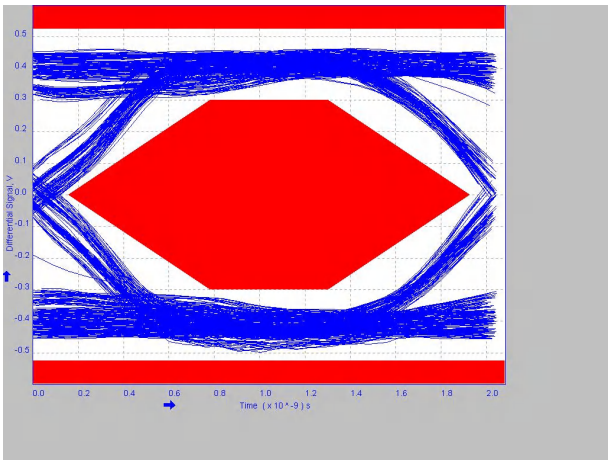

図 8-10. 5 Meter Pre-Channel With TUSB216 BOOST=2 RX_SEN=MED

Copyright © 2023 Texas Instruments Incorporated

8.2.3 Application Curves

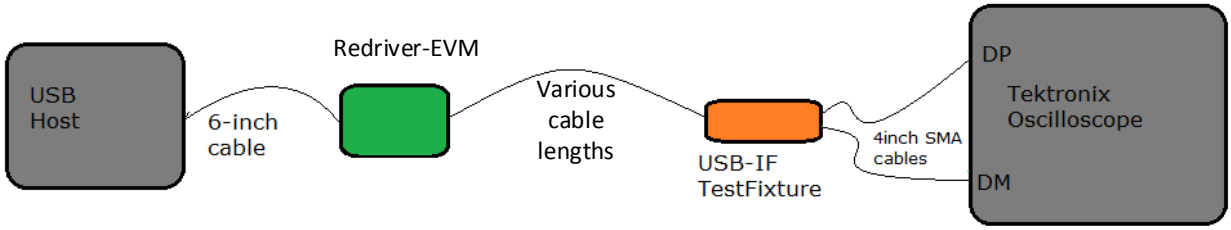

図 8-11. Near End Eye Measurement Set-Up With Post-Channel Cable

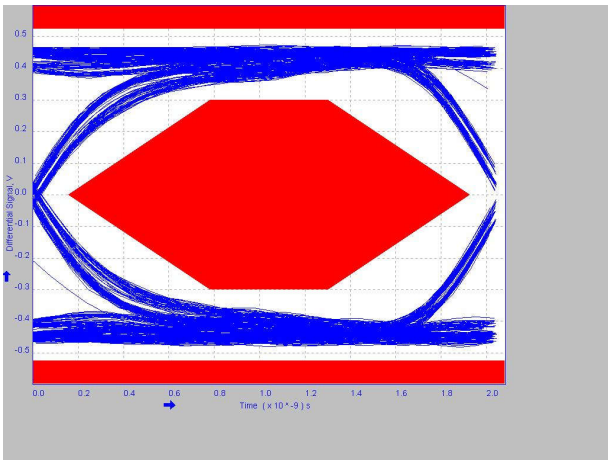

図 8-12. 6 Inches Post Channel Without TUSB216

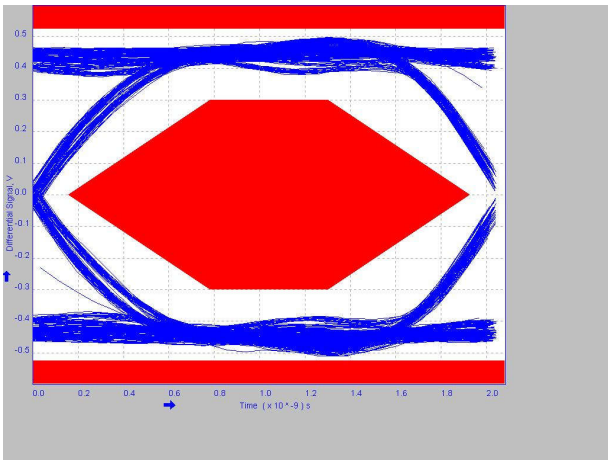

図 8-13. 6 Inches Post-Channel With TUSB216 BOOST=0 RX_SEN=HIGH

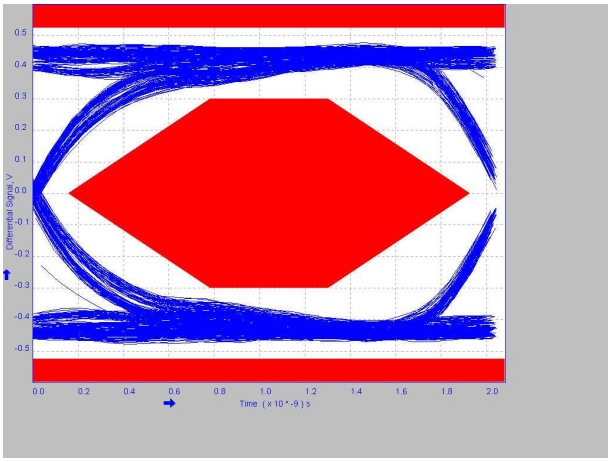

図 8-14. 1 Meter Post-Channel Without TUSB216

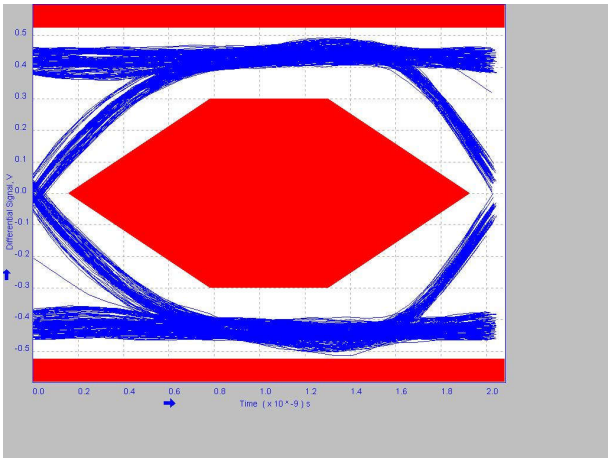

図 8-15. 1 Meter Post-Channel With TUSB216 BOOST=0 RX_SEN=MED

8.2.3 Application Curves (continued)

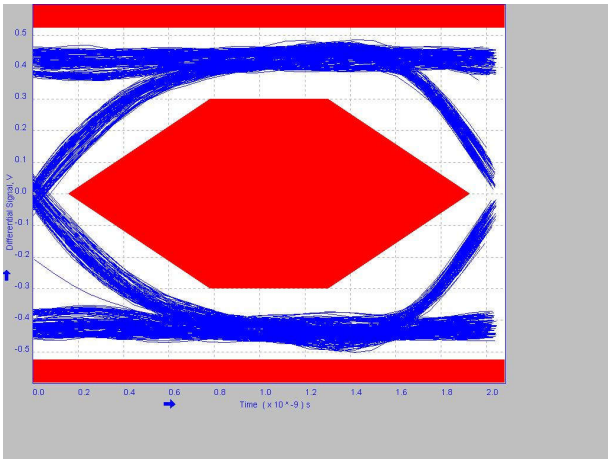

図 8-16. 1 Meter Post-Channel With TUSB216 BOOST=0 RX_SEN=HIGH

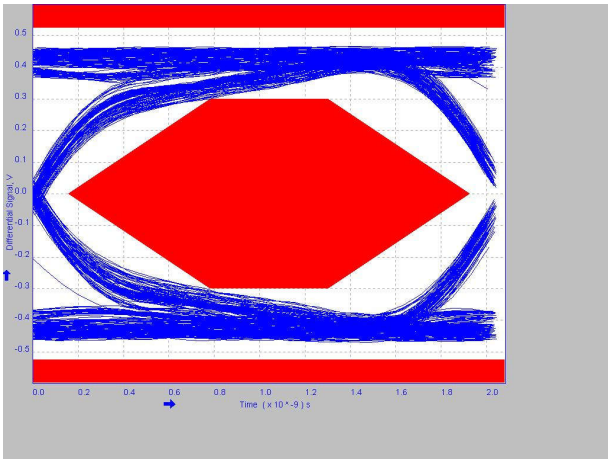

図 8-17. 2 Meter Post-Channel Without TUSB216

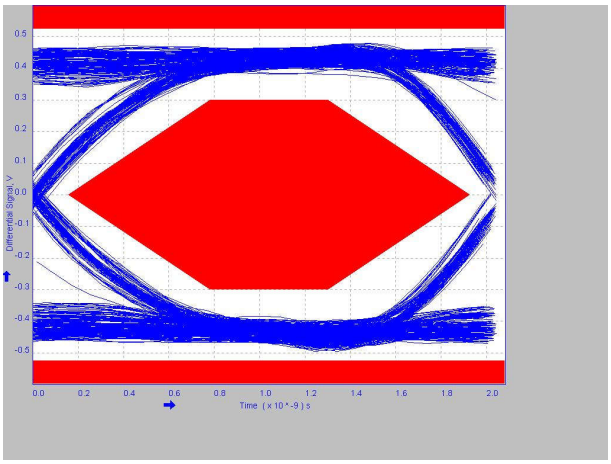

図 8-18. 2 Meter Post-Channel With TUSB216 BOOST=1 RX_SEN=MED

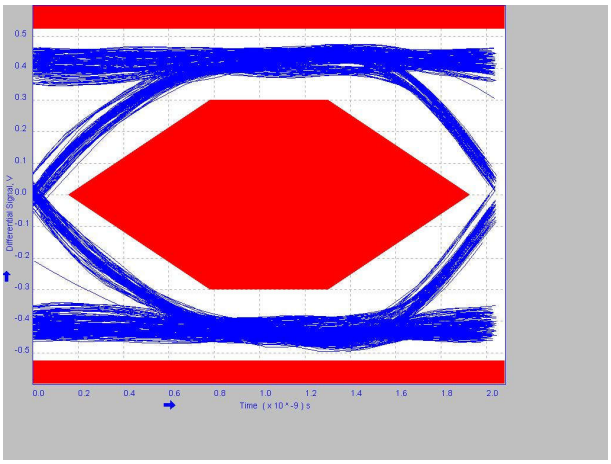

図 8-19. 2 Meter Post-Channel With TUSB216 BOOST=1 RX_SEN=HIGH

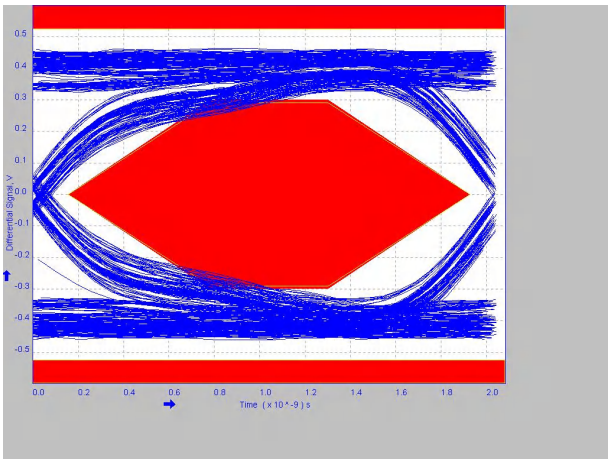

図 8-20. 4 Meter Post-Channel Without TUSB216

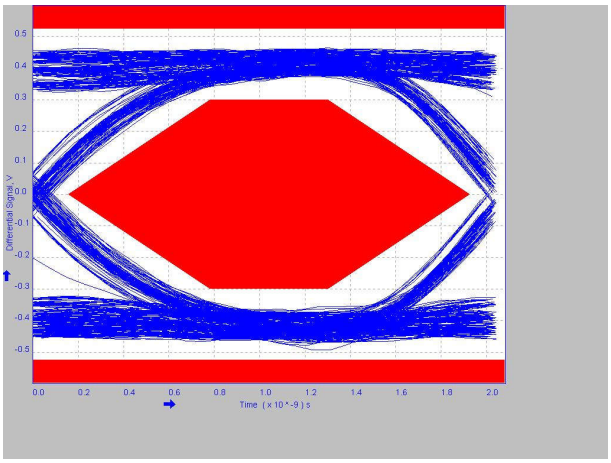

図 8-21. 4 Meter Post-Channel With TUSB216 BOOST=2 RX_SEN=MED

Copyright © 2023 Texas Instruments Incorporated

8.3 Power Supply Recommendations

On power up, the interaction of the RSTN pin and power on ramp could result in digital circuits not being set correctly. The device should not be enabled until the power on ramp has settled to minimum recommended supply voltage or higher to ensure a correct power on reset of the digital circuitry. If RSTN cannot be held low by microcontroller or other circuitry until the power on ramp has settled, then an external capacitor from the RSTN pin to GND is required to hold the device in the low power reset state.

The RC time constant should be larger than five times of the power on ramp time (0 to V_{CC}). With a typical internal pullup resistance of 500 kΩ, the recommended minimum external capacitance is calculated as:

$$[\text{Ramp Time} \times 5] \div [500\ \text{k}\Omega] \quad (1)$$

8.4 Layout

8.4.1 Layout Guidelines

Although the land pattern has matched trace width to pad width, optimal impedance control is based on the user's own PCB stack-up. The recommendation is to maintain 90 Ω differential routing underneath the device.

8.4.2 Layout Example

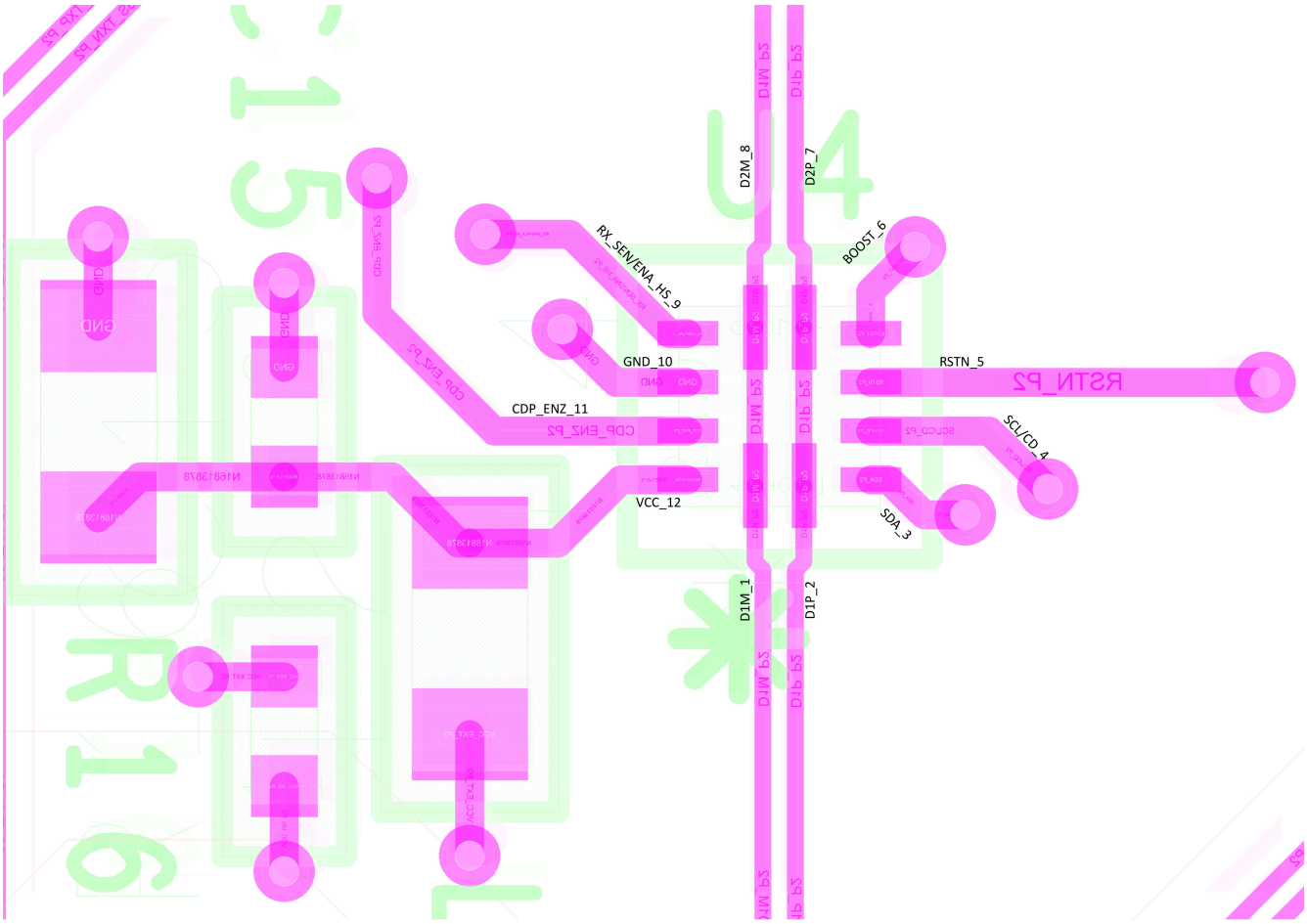

図 8-22. Layout Example

9 Device and Documentation Support

9.1 ドキュメントの更新通知を受け取る方法

ドキュメントの更新についての通知を受け取るには、www.tij.co.jp のデバイス製品フォルダを開いてください。[通知] をクリックして登録すると、変更されたすべての製品情報に関するダイジェストを毎週受け取ることができます。 変更の詳細については、改訂されたドキュメントに含まれている改訂履歴をご覧ください。

9.2 サポート・ リソース

テキサス・ インスツルメンツ E2E™ サポート・ フォーラムは、エンジニアが検証済みの回答と設計に関するヒントをエキスパートから迅速かつ直接得ることができる場所です。既存の回答を検索したり、独自の質問をしたりすることで、設計で必要な支援を迅速に得ることができます。

リンクされているコンテンツは、各寄稿者により「現状のまま」提供されるものです。これらはテキサス・ インスツルメンツの仕様を構成するものではなく、必ずしもテキサス・ インスツルメンツの見解を反映したものではありません。テキサス・ インスツルメンツの使用条件を参照してください。

9.3 Trademarks

テキサス・ インスツルメンツ E2E™ is a trademark of Texas Instruments.
すべての商標は、それぞれの所有者に帰属します。

9.4 静電気放電に関する注意事項

この IC は、ESD によって破損する可能性があります。テキサス・ インスツルメンツは、IC を取り扱う際には常に適切な注意を払うことを推奨します。正しい取り扱いおよび設置手順に従わない場合、デバイスを破損するおそれがあります。

ESD による破損は、わずかな性能低下からデバイスの完全な故障まで多岐にわたります。精密な IC の場合、パラメータがわずかに変化するだけで公表されている仕様から外れる可能性があるため、破損が発生しやすくなっています。

9.5 用語集

テキサス・ インスツルメンツ用語集　この用語集には、用語や略語の一覧および定義が記載されています。

10 Revision History

資料番号末尾の英字は改訂を表しています。その改訂履歴は英語版に準じています。

Changes from Revision C (October 2020) to Revision D (December 2023) — **Page**

- 拡張温度範囲の部品番号を追加 1
- パッケージのリード フレーム サイズを含めるよう「製品情報」表を更新 1
- Added *Device Comparison* section 2
- Changed maximum recommended voltage for RX_SEN from 3.6 V to 5.0 V 5
- Changed $V_{IH(Max)}$ for RX_SEN from 5.5 V to 5.0 V and removed resistors values 6
- Added 400 kHz I2C support 6
- Added timing table for 400 kHz I2C Fast Mode 8
- Added I2C standard and fast mode support in Detailed Description 10
- Corrected the footnote about limiting RX_SEN pin voltage to 5 V instead of BOOST pin to 3.6 V 16
- Corrected NOTE about the recommended voltage for RX_SEN pin from max 3.6 V to 5 V 17

Changes from Revision B (January 2020) to Revision C (October 2020) — **Page**

- Changed to correct package type to RWB instead of RGY 5
- Added a note to place an option to add a decoupling cap on CDP_ENZ 14

Changes from Revision A (February 2019) to Revision B (January 2020) — **Page**

- 100m から 10m に誤記訂正するために変更 1
- 今後の Q100 バージョンに移行するため車載用アプリケーションを削除 1

Copyright © 2023 Texas Instruments Incorporated

11 Mechanical, Packaging, and Orderable Information

The following pages include mechanical, packaging, and orderable information. This information is the most current data available for the designated devices. This data is subject to change without notice and revision of this document. For browser-based versions of this data sheet, refer to the left-hand navigation.

PACKAGING INFORMATION

Orderable part number	Status (1)	Material type (2)	Package | Pins	Package qty | Carrier	RoHS (3)	Lead finish/ Ball material (4)	MSL rating/ Peak reflow (5)	Op temp (°C)	Part marking (6)
TUSB216RWBR	Active	Production	X2QFN (RWB) | 12	3000 | LARGE T&R	Yes	NIPDAU	Level-2-260C-1 YEAR	0 to 70	26
TUSB216RWBR.A	Active	Production	X2QFN (RWB) | 12	3000 | LARGE T&R	Yes	NIPDAU	Level-2-260C-1 YEAR	0 to 70	26
TUSB216RWBT	Active	Production	X2QFN (RWB) | 12	250 | SMALL T&R	Yes	NIPDAU	Level-2-260C-1 YEAR	0 to 70	26
TUSB216RWBT.A	Active	Production	X2QFN (RWB) | 12	250 | SMALL T&R	Yes	NIPDAU	Level-2-260C-1 YEAR	0 to 70	26

(1) **Status:** For more details on status, see our product life cycle.

(2) **Material type:** When designated, preproduction parts are prototypes/experimental devices, and are not yet approved or released for full production. Testing and final process, including without limitation quality assurance, reliability performance testing, and/or process qualification, may not yet be complete, and this item is subject to further changes or possible discontinuation. If available for ordering, purchases will be subject to an additional waiver at checkout, and are intended for early internal evaluation purposes only. These items are sold without warranties of any kind.

(3) **RoHS values:** Yes, No, RoHS Exempt. See the TI RoHS Statement for additional information and value definition.

(4) **Lead finish/Ball material:** Parts may have multiple material finish options. Finish options are separated by a vertical ruled line. Lead finish/Ball material values may wrap to two lines if the finish value exceeds the maximum column width.

(5) **MSL rating/Peak reflow:** The moisture sensitivity level ratings and peak solder (reflow) temperatures. In the event that a part has multiple moisture sensitivity ratings, only the lowest level per JEDEC standards is shown. Refer to the shipping label for the actual reflow temperature that will be used to mount the part to the printed circuit board.

(6) **Part marking:** There may be an additional marking, which relates to the logo, the lot trace code information, or the environmental category of the part.

Multiple part markings will be inside parentheses. Only one part marking contained in parentheses and separated by a "~" will appear on a part. If a line is indented then it is a continuation of the previous line and the two combined represent the entire part marking for that device.

Important Information and Disclaimer: The information provided on this page represents TI's knowledge and belief as of the date that it is provided. TI bases its knowledge and belief on information provided by third parties, and makes no representation or warranty as to the accuracy of such information. Efforts are underway to better integrate information from third parties. TI has taken and continues to take reasonable steps to provide representative and accurate information but may not have conducted destructive testing or chemical analysis on incoming materials and chemicals. TI and TI suppliers consider certain information to be proprietary, and thus CAS numbers and other limited information may not be available for release.

In no event shall TI's liability arising out of such information exceed the total purchase price of the TI part(s) at issue in this document sold by TI to Customer on an annual basis.

OTHER QUALIFIED VERSIONS OF TUSB216 :

- Automotive : TUSB216-Q1

NOTE: Qualified Version Definitions:

- Automotive - Q100 devices qualified for high-reliability automotive applications targeting zero defects

TAPE AND REEL INFORMATION

REEL DIMENSIONS

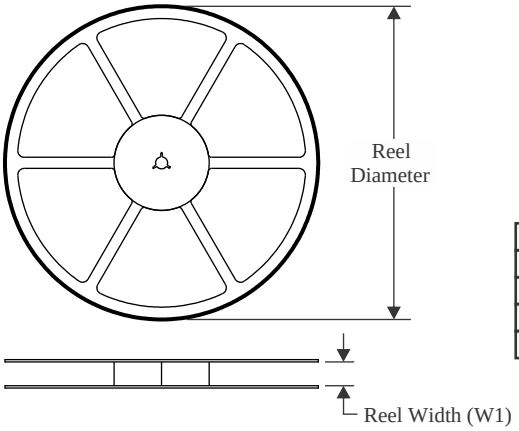

TAPE DIMENSIONS

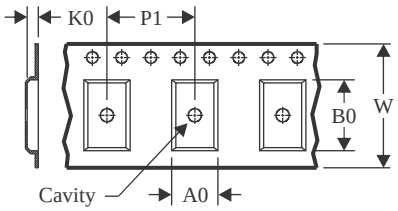

A0	Dimension designed to accommodate the component width
B0	Dimension designed to accommodate the component length
K0	Dimension designed to accommodate the component thickness
W	Overall width of the carrier tape
P1	Pitch between successive cavity centers

QUADRANT ASSIGNMENTS FOR PIN 1 ORIENTATION IN TAPE

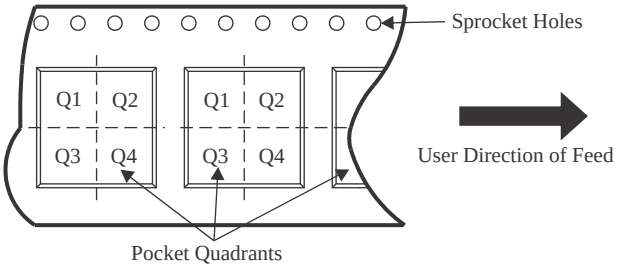

*All dimensions are nominal

Device	Package Type	Package Drawing	Pins	SPQ	Reel Diameter (mm)	Reel Width W1 (mm)	A0 (mm)	B0 (mm)	K0 (mm)	P1 (mm)	W (mm)	Pin1 Quadrant
TUSB216RWBR	X2QFN	RWB	12	3000	180.0	9.5	1.8	1.8	0.45	4.0	8.0	Q1
TUSB216RWBR	X2QFN	RWB	12	3000	180.0	8.4	1.8	1.8	0.48	4.0	8.0	Q1
TUSB216RWBT	X2QFN	RWB	12	250	180.0	9.5	1.8	1.8	0.45	4.0	8.0	Q1
TUSB216RWBT	X2QFN	RWB	12	250	180.0	8.4	1.8	1.8	0.48	4.0	8.0	Q1

TAPE AND REEL BOX DIMENSIONS

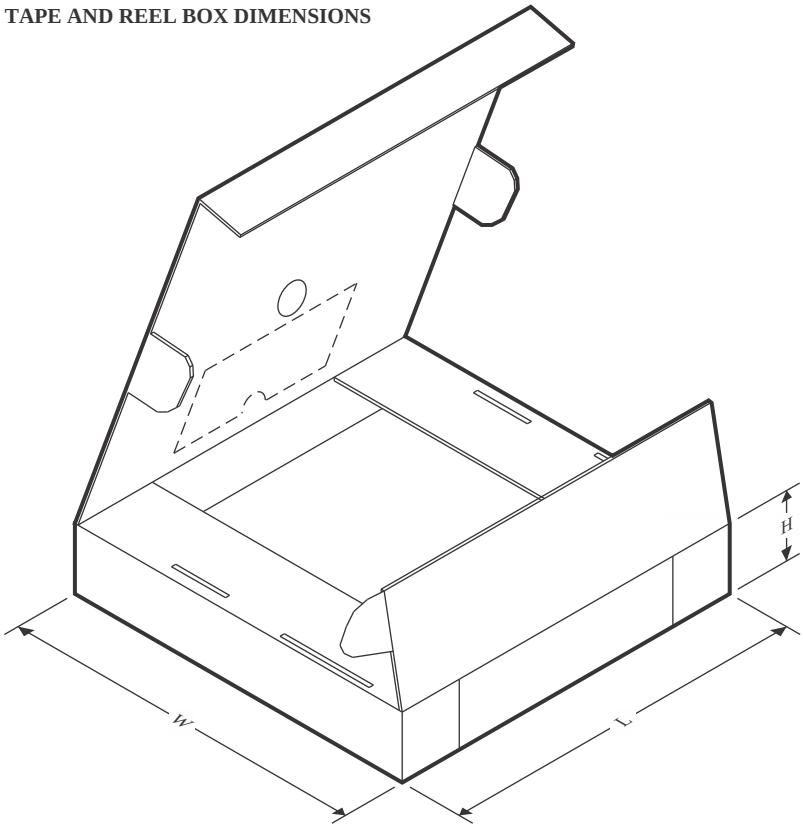

*All dimensions are nominal

Device	Package Type	Package Drawing	Pins	SPQ	Length (mm)	Width (mm)	Height (mm)
TUSB216RWBR	X2QFN	RWB	12	3000	189.0	185.0	36.0
TUSB216RWBR	X2QFN	RWB	12	3000	210.0	185.0	35.0
TUSB216RWBT	X2QFN	RWB	12	250	189.0	185.0	36.0
TUSB216RWBT	X2QFN	RWB	12	250	210.0	185.0	35.0

GENERIC PACKAGE VIEW

RHB 32

VQFN - 1 mm max height

5 x 5, 0.5 mm pitch

PLASTIC QUAD FLATPACK - NO LEAD

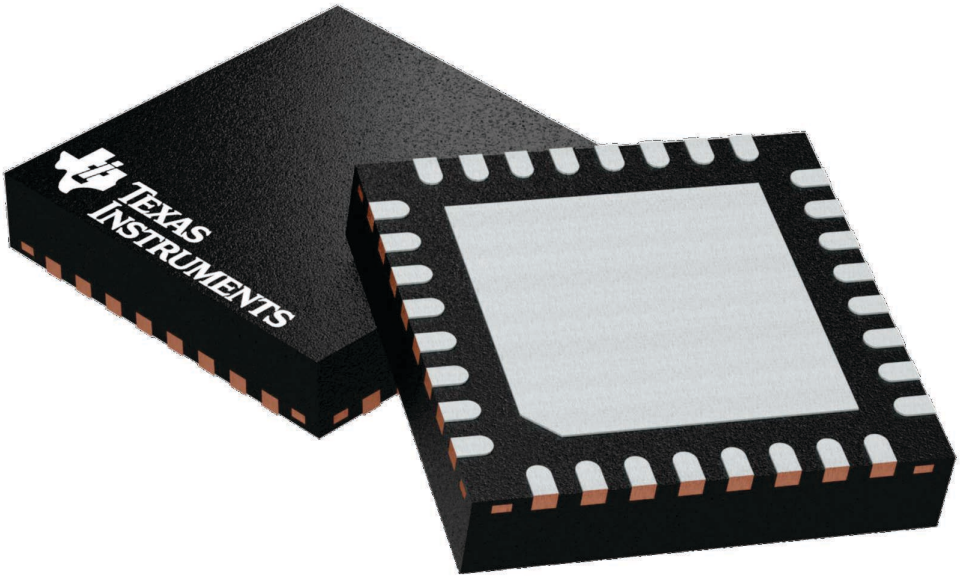

Images above are just a representation of the package family, actual package may vary.
Refer to the product data sheet for package details.

4224745/A

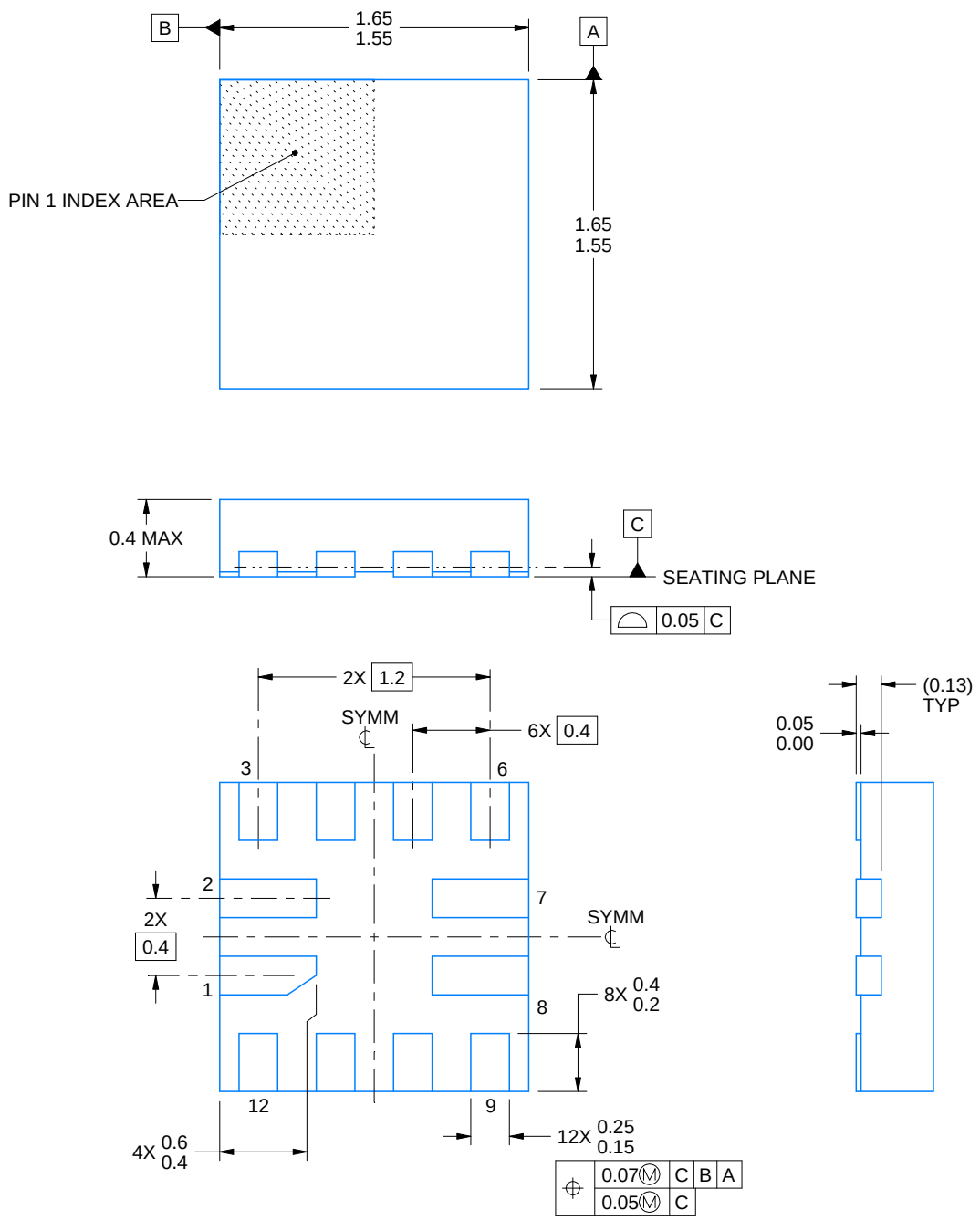

NOTES:

1. All linear dimensions are in millimeters. Any dimensions in parenthesis are for reference only. Dimensioning and tolerancing per ASME Y14.5M.
2. This drawing is subject to change without notice.

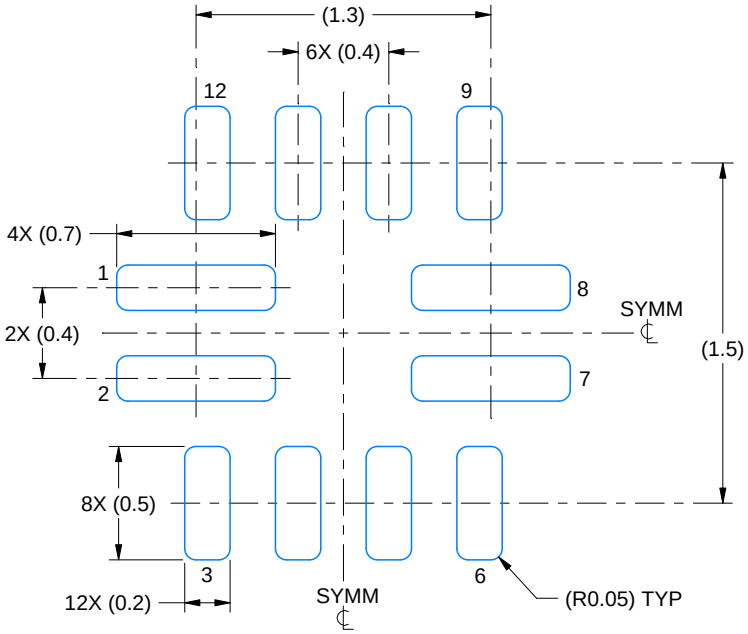

LAND PATTERN EXAMPLE
EXPOSED METAL SHOWN
SCALE:30X

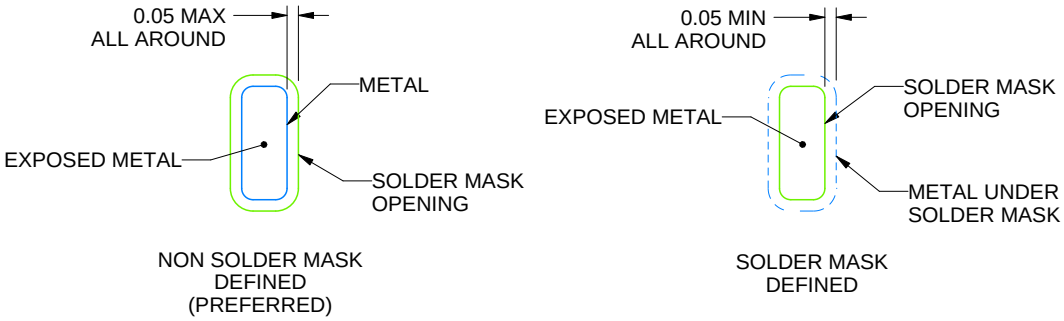

SOLDER MASK DETAILS

4221631/B 07/2017

NOTES: (continued)

3. For more information, see Texas Instruments literature number SLUA271 (www.ti.com/lit/slua271).

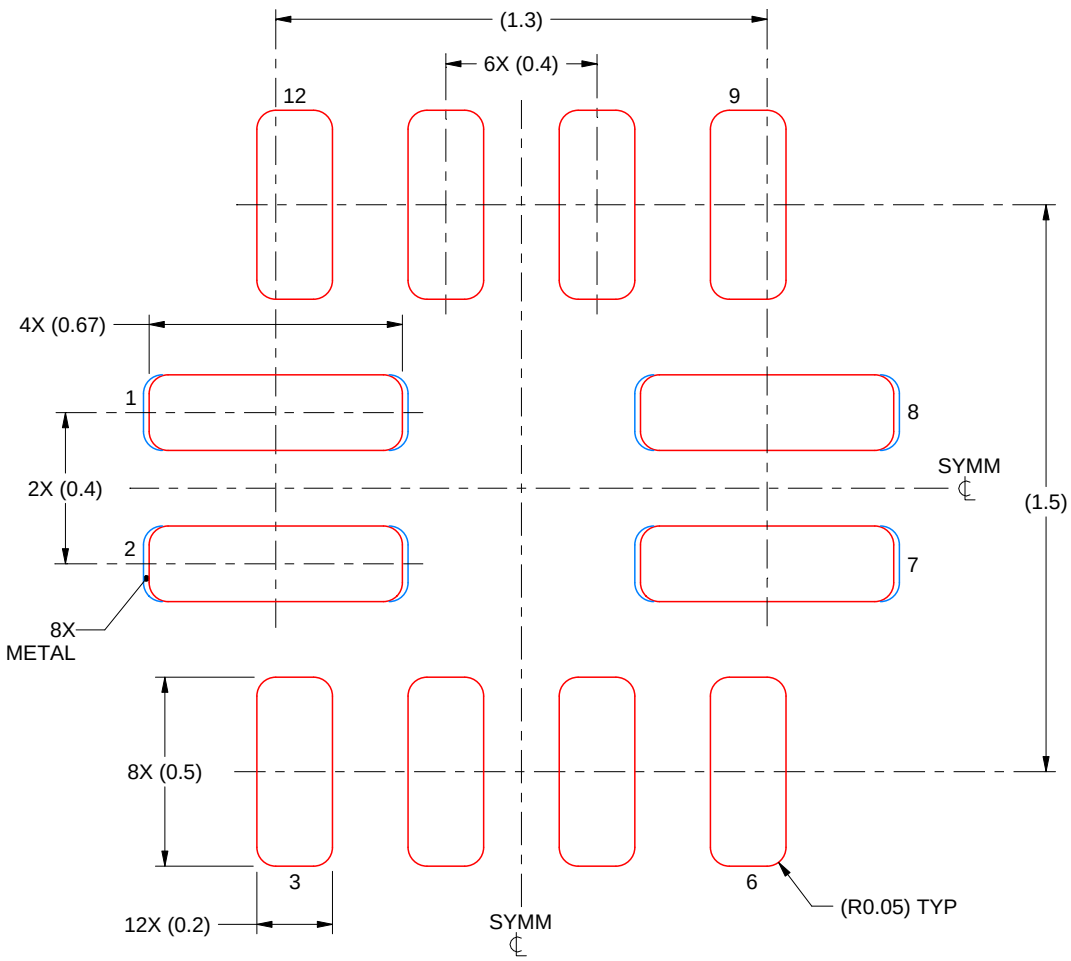

SOLDER PASTE EXAMPLE
BASED ON 0.1 mm THICK STENCIL

PADS 1,2,7 & 8
96% PRINTED SOLDER COVERAGE BY AREA
SCALE:50X

4221631/B 07/2017

NOTES: (continued)

4. Laser cutting apertures with trapezoidal walls and rounded corners may offer better paste release. IPC-7525 may have alternate design recommendations.

重要なお知らせと免責事項

TI は、技術データと信頼性データ (データシートを含みます)、設計リソース (リファレンス デザインを含みます)、アプリケーションや設計に関する各種アドバイス、Web ツール、安全性情報、その他のリソースを、欠陥が存在する可能性のある「現状のまま」提供しており、商品性および特定目的に対する適合性の黙示保証、第三者の知的財産権の非侵害保証を含むいかなる保証も、明示的または黙示的にかかわらず拒否します。

これらのリソースは、TI 製品を使用する設計の経験を積んだ開発者への提供を意図したものです。(1) お客様のアプリケーションに適した TI 製品の選定、(2) お客様のアプリケーションの設計、検証、試験、(3) お客様のアプリケーションに該当する各種規格や、その他のあらゆる安全性、セキュリティ、規制、または他の要件への確実な適合に関する責任を、お客様のみが単独で負うものとします。

上記の各種リソースは、予告なく変更される可能性があります。これらのリソースは、リソースで説明されている TI 製品を使用するアプリケーションの開発の目的でのみ、TI はその使用をお客様に許諾します。これらのリソースに関して、他の目的で複製することや掲載することは禁止されています。TI や第三者の知的財産権のライセンスが付与されている訳ではありません。お客様は、これらのリソースを自身で使用した結果発生するあらゆる申し立て、損害、費用、損失、責任について、TI およびその代理人を完全に補償するものとし、TI は一切の責任を拒否します。

TI の製品は、 TI の販売条件 、 TI の総合的な品質ガイドライン 、 ti.com または TI 製品などに関連して提供される他の適用条件に従い提供されます。TI がこれらのリソースを提供することは、適用される TI の保証または他の保証の放棄の拡大や変更を意味するものではありません。 TI がカスタム、またはカスタマー仕様として明示的に指定していない限り、TI の製品は標準的なカタログに掲載される汎用機器です。

お客様がいかなる追加条項または代替条項を提案する場合も、TI はそれらに異議を唱え、拒否します。

Copyright © 2026, Texas Instruments Incorporated

最終更新日：2025 年 10 月