TVS0500 5Vフラットクランプ・サージ保護デバイス

1 特長

- 産業用信号ライン向け2kV、42ΩのIEC 61000-4-5サージ・テストに耐える保護機能
- 最大クランプ電圧: サージ電流(8/20µs) 43Aで9.2V
- スタンドオフ電圧: 5V
- 4mm^{2}の小さい占有面積
- 125℃で35Aのサージ電流(8/20µs)の反復ストライクを5,000回吸収
- 強力なサージ保護:
  - IEC61000-4-5 (8/20µs): 43A
  - IEC61643-321 (10/1000µs): 22A
- 低リーク電流
  - 27℃で70pA (標準値)
  - 85℃で6.5nA (標準値)
- 低容量: 155pF
- レベル4 IEC 61000-4-2に準拠したESD保護機能を内蔵

2 アプリケーション

- 産業用センサ
- PLC I/Oモジュール
- 5V電力ライン
- 家電製品
- 医療用機器
- スマート・メータ

3 概要

TVS0500は、最大43AのIEC 61000-4-5フォルト電流を強力にシャントして、システムを高電力過渡事象や落雷から保護します。一般的な産業用信号ラインのEMC要件向けのソリューションとして、42Ωのインピーダンスにより結合される、最大2kVのIEC 61000-4-5開路電圧に耐えられます。TVS0500は、独自の帰還メカニズムの採用により、フォルト時に高精度のフラット・クランピングを実現し、システムがさらされる電圧を10V未満に抑えます。電圧レギュレーションが正確であるため、許容電圧の低いシステム部品を安心して選択でき、堅牢性を犠牲にすることなくシステムのコストと複雑さを抑えることができます。

また、TVS0500は占有面積が小さい2mm×2mmのSONパッケージで供給されるため、スペースの制約があるアプリケーションに最適であり、業界標準のSMA/SMBパッケージに比べて占有面積を70%削減できます。リーク電流と容量が極めて低いことから、保護するラインへの影響も最小限に抑えられます。製品のライフサイクル全体にわたる強力な保護を保証するために、TIはTVS0500に対し高温で5000回の反復サージが発生するテストを実施し、性能に変化がないことを確認しています。

TVS0500はTIのフラットクランプ・サージ・デバイス・ファミリの製品です。同ファミリに属する他のデバイスの詳細については、「*デバイス比較表*」を参照してください。

製品情報(1)

型番	パッケージ	本体サイズ(公称)
TVS0500	SON (6)	2.00mm×2.00mm

(1) 利用可能なすべてのパッケージについては、このデータシートの末尾にある注文情報を参照してください。

占有面積の比較

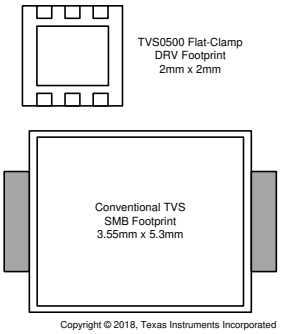

Copyright © 2018, Texas Instruments Incorporated

8/20µsのサージ・イベントに対する電圧クランプの応答

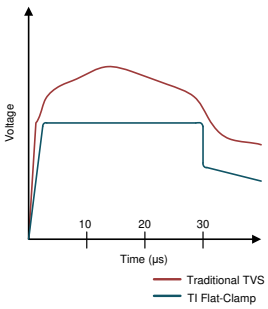

英語版のTI製品についての情報を翻訳したこの資料は、製品の概要を確認する目的で便宜的に提供しているものです。該当する正式な英語版の最新情報は、www.ti.comで閲覧でき、その内容が常に優先されます。TIでは翻訳の正確性および妥当性につきましては一切保証いたしません。実際の設計などの前には、必ず最新版の英語版をご参照くださいますようお願いいたします。

目次

1 特長 ... 1
2 アプリケーション ... 1
3 概要 ... 1
4 改訂履歴 ... 2
5 **Device Comparison Table** ... 3
6 **Pin Configuration and Functions** ... 4
7 **Specifications** ... 5
7.1 Absolute Maximum Ratings ... 5
7.2 ESD Ratings - JEDEC ... 5
7.3 ESD Ratings - IEC ... 5
7.4 Recommended Operating Conditions ... 5
7.5 Thermal Information ... 5
7.6 Electrical Characteristics ... 6
7.7 Typical Characteristics ... 7
8 **Detailed Description** ... 9
8.1 Overview ... 9
8.2 Functional Block Diagram ... 9
8.3 Feature Description ... 9
8.4 Reliability Testing ... 9
8.5 Device Functional Modes ... 9
9 **Application and Implementation** ... 11
9.1 Application Information ... 11
9.2 Typical Application ... 11
10 **Power Supply Recommendations** ... 12
11 **Layout** ... 13
11.1 Layout Guidelines ... 13
11.2 Layout Example ... 13
12 デバイスおよびドキュメントのサポート ... 14
12.1 ドキュメントの更新通知を受け取る方法 ... 14
12.2 コミュニティ・リソース ... 14
12.3 商標 ... 14
12.4 静電気放電に関する注意事項 ... 14
12.5 Glossary ... 14
13 メカニカル、パッケージ、および注文情報 ... 14

4 改訂履歴

Revision B (February 2018) から **Revision C** に変更 **Page**

- Fixed grammar error in the *Reliability Testing* section ... 9

Revision A (February 2018) から **Revision B** に変更 **Page**

- Changed DC Breakdown Current MAX from 100 to 50 in the Specifications *Absolute Maximum Ratings* table ... 5
- Changed Break-down Voltage MIN from 7.6 to 7.5 and MAX from 8.2 to 8.4 in the Specifications *Electrical Characteristics* table ... 5

2017年12月発行のものから更新 **Page**

- デバイスのドキュメントのステータスを事前情報から量産データに 変更 ... 1

Copyright © 2017–2019, Texas Instruments Incorporated

5 Device Comparison Table

Device	V_{rwm}	V_{clamp} at I_{pp}	I_{pp} (8/20 µs)	V_{rwm} leakage (nA)	Package Options	Polarity
TVS0500	5	9.2	43	0.07	SON	Unidirectional
TVS1400	14	18.4	43	2	SON	Unidirectional
TVS1800	18	22.8	40	0.5	SON	Unidirectional
TVS2200	22	27.7	40	3.2	SON	Unidirectional
TVS2700	27	32.5	40	1.7	SON	Unidirectional
TVS3300	33	38	35	19	WCSP, SON	Unidirectional

Copyright © 2017–2019, Texas Instruments Incorporated

6 Pin Configuration and Functions

DRV Package
6-Pin SON
Top View

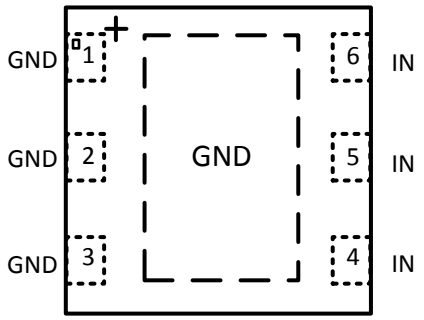

Pin Functions

PIN		TYPE	DESCRIPTION
NAME	No.		
IN	4, 5, 6	I	ESD and surge protected channel
GND	1, 2, 3, exposed thermal pad	GND	Ground

Copyright © 2017–2019, Texas Instruments Incorporated

7 Specifications

7.1 Absolute Maximum Ratings

T_A = 27℃ (unless otherwise noted)(1)

		MIN	MAX	UNIT
Maximum Surge	IEC 61000-4-5 Current (8/20 µs)		43	A
	IEC 61000-4-5 Power (8/20 µs)		400	W
	IEC 61643-321 Current (10/1000 µs)		20	A
	IEC 61643-321 Power (10/1000 µs)		180	W
Maximum Forward Surge	IEC 61000-4-5 Current (8/20 µs)		50	A
	IEC 61000-4-5 Power (8/20 µs)		80	W
	IEC 61643-321 Current (10/1000 µs)		23	A
	IEC 61643-321 Power (10/1000 µs)		60	W
EFT	IEC 61000-4-4 EFT Protection		80	A
I_{BR}	DC Breakdown Current		50	mA
I_F	DC Forward Current		500	mA
T_A	Ambient Operating Temperature	-40	125	°C
T_{stg}	Storage Temperature	-65	150	°C

(1) Stresses beyond those listed under *Absolute Maximum Rating* may cause permanent damage to the device. These are stress ratings only, which do not imply functional operation of the device at these or any other conditions beyond those indicated under *Recommended Operating Condition*. Exposure to absolute-maximum-rated conditions for extended periods may affect device reliability.

7.2 ESD Ratings - JEDEC

			VALUE	UNIT
$V_{(ESD)}$	Electrostatic discharge	Human body model (HBM), per ANSI/ESDA/JEDEC JS-001, all pins(1)	±2000	V
		Charged device model (CDM), per JEDEC specification JESD22-C101, all pins(2)	±500	

(1) JEDEC document JEP155 states that 500-V HBM allows safe manufacturing with a standard ESD control process.
(2) JEDEC document JEP157 states that 250-V CDM allows safe manufacturing with a standard ESD control process.

7.3 ESD Ratings - IEC

			VALUE	UNIT
$V_{(ESD)}$	Electrostatic discharge	IEC 61000-4-2 contact discharge	±24	kV
		IEC 61000-4-2 air-gap discharge	±30	

7.4 Recommended Operating Conditions

over operating free-air temperature range (unless otherwise noted)

PARAMETER		MIN	NOM	MAX	UNIT
V_{RWM}	Reverse Stand-off Voltage		5		V

7.5 Thermal Information

THERMAL METRIC(1)		TVS0500 DRV (SON) 6 PINS	UNIT
R_{qJA}	Junction-to-ambient thermal resistance	70.4	°C/W
$R_{qJC(top)}$	Junction-to-case (top) thermal resistance	73.7	°C/W
R_{qJB}	Junction-to-board thermal resistance	40	°C/W
Y_{JT}	Junction-to-top characterization parameter	2.2	°C/W

(1) For more information about traditional and new thermal metrics, see the Semiconductor and IC Package Thermal Metrics application report.

Copyright © 2017–2019, Texas Instruments Incorporated

Thermal Information (continued)

THERMAL METRIC(1)		TVS0500 DRV (SON) 6 PINS	UNIT
Y_{JB}	Junction-to-board characterization parameter	40.3	°C/W
$R_{qJC(bot)}$	Junction-to-case (bottom) thermal resistance	11	°C/W

7.6 Electrical Characteristics

over operating free-air temperature range (unless otherwise noted)

PARAMETER		TEST CONDITIONS	MIN	TYP	MAX	UNIT
I_{LEAK}	Leakage Current	Measured at $V_{IN} = V_{RWM}$, T_A = 27°C		0.07	5.5	nA
		Measured at $V_{IN} = V_{RWM}$, T_A = 85°C		6.5	220	nA
		Measured at $V_{IN} = V_{RWM}$, T_A = 105°C		38	755	nA
V_F	Forward Voltage	I_{IN} = 1 mA from GND to IO	0.25	0.5	0.65	V
V_{BR}	Break-down Voltage	I_{IN} = 1 mA from IO to GND	7.5	7.9	8.4	V
V_{FCLAMP}	Forward Clamp Voltage	35 A IEC 61000-4-5 Surge (8/20 µs) from GND to IO, 27°C		2	5	V
V_{CLAMP}	Clamp Voltage	24 A IEC 61000-4-5 Surge (8/20 µs) from IO to GND, V_{IN} = 0 V before surge, 27°C		8.6	8.8	V
		43 A IEC 61000-4-5 Surge (8/20 µs) from IO to GND, V_{IN} = 0 V before surge, 27°C		9.2	9.5	V
		35 A IEC 61000-4-5 Surge (8/20 µs) from IO to GND, $V_{IN} = V_{RWM}$ before surge, T_A = 125°C		9.2	9.5	V
R_{DYN}	8/20 µs surge dynamic resistance	Calculated from V_{CLAMP} at .5*I_{pp} and I_{pp} surge current levels, 27°C		30	50	mΩ
C_{IN}	Input pin capacitance	V_{IN} = 5 V, f = 1 MHz, 30 mV_{pp}, IO to GND		155		pF
SR	Maximum Slew Rate	0-V_{RWM} rising edge, sweep rise time and measure slew rate when I_{PEAK} = 1 mA, 27°C		2.5		V/µs
		0-V_{RWM} rising edge, sweep rise time and measure slew rate when I_{PEAK} = 1 mA, 105°C		0.7		V/µs

Copyright © 2017–2019, Texas Instruments Incorporated

7.7 Typical Characteristics

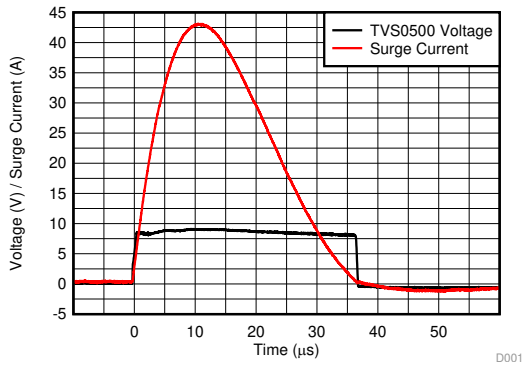

図 1. 8/20 µs Surge Response at 43 A

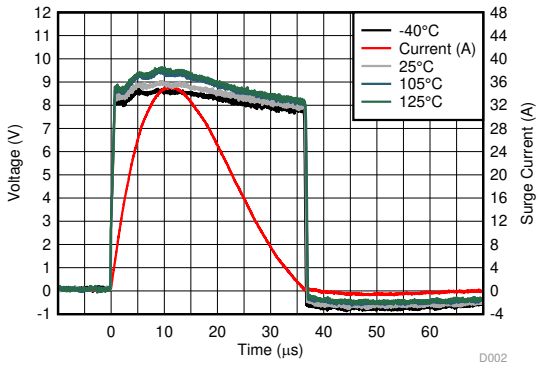

図 2. 8/20 µs Surge Response at 35 A Across Temperature

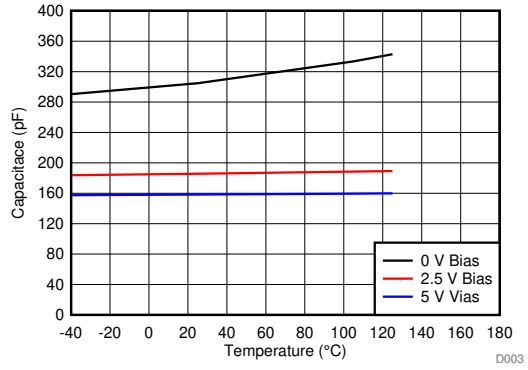

f = 1 MHz, 30 mVpp, IO to GND

図 3. Capacitance vs Temperature Across Bias

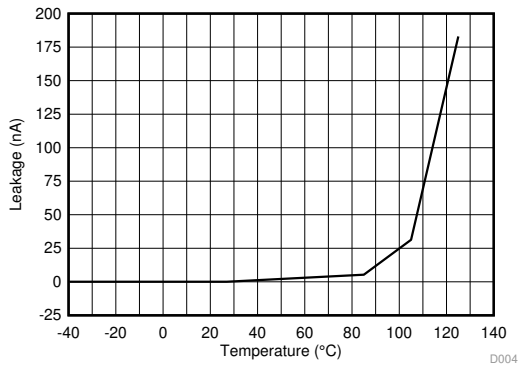

図 4. Leakage Current vs Temperature at 5 V

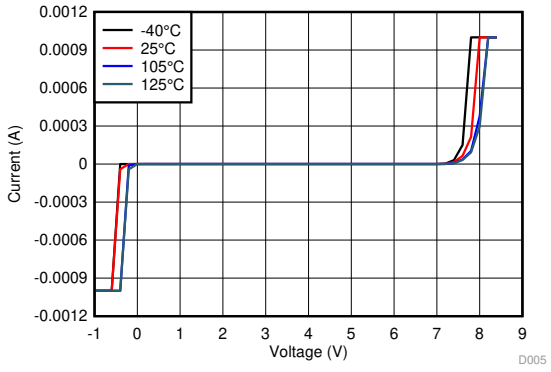

図 5. I/V Curve Across Temperature

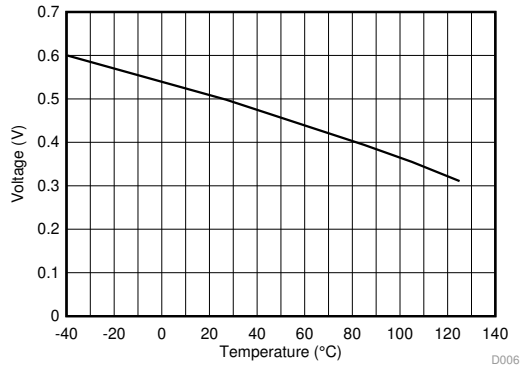

図 6. Forward Voltage vs Temperature

Copyright © 2017–2019, Texas Instruments Incorporated

Typical Characteristics (continued)

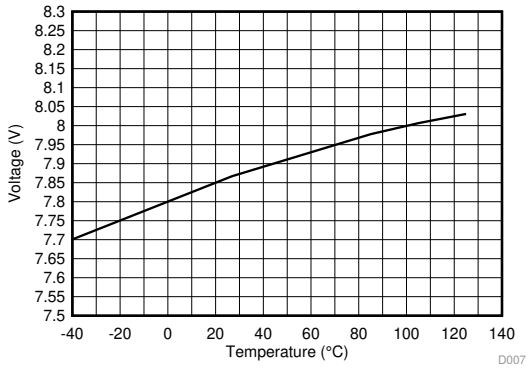

図 7. Breakdown Voltage (1 mA) vs Temperature

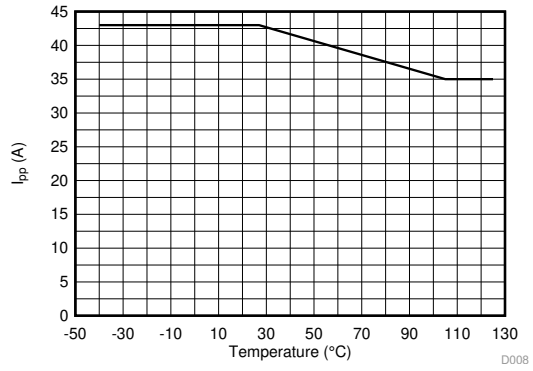

図 8. Max Surge Current (8/20 µs) vs Temperature

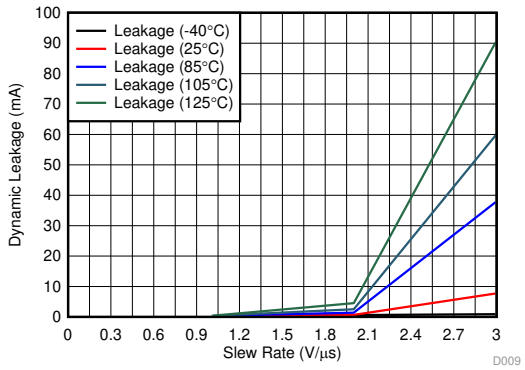

図 9. Dynamic Leakage vs Signal Slew Rate across Temperature

Copyright © 2017–2019, Texas Instruments Incorporated

8 Detailed Description

8.1 Overview

The TVS0500 is a precision clamp with a low, flat clamping voltage during transient overvoltage events like surge and protecting the system with zero voltage overshoot.

8.2 Functional Block Diagram

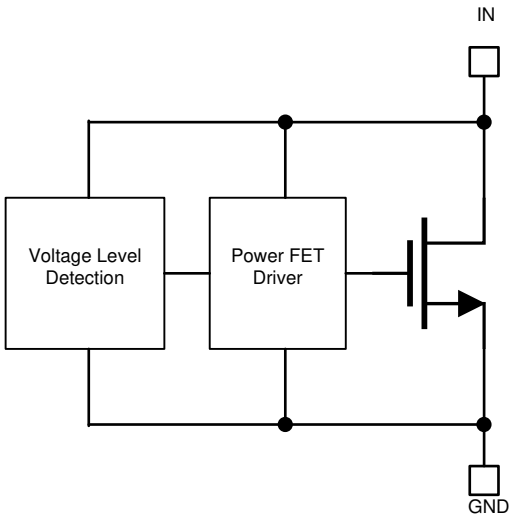

8.3 Feature Description

The TVS0500 is a precision clamp that handles 43 A of IEC 61000-4-5 8/20 µs surge pulse. The flat clamping feature helps keep the clamping voltage very low to keep the downstream circuits from being stressed. The flat clamping feature can also help end-equipment designers save cost by opening up the possibility to use lower-cost, lower voltage tolerant downstream ICs. The TVS0500 has minimal leakage under the standoff voltage of 5 V, making it an ideal candidate for applications where low leakage and power dissipation is a necessity. IEC 61000-4-2 and IEC 61000-4-4 ratings make it a robust protection solution for ESD and EFT events. Wide ambient temperature range of –40°C to +125°C a good candidate for most applications. Compact packages enable it to be used in small devices and save board area.

8.4 Reliability Testing

To ensure device reliability, the TVS0500 is characterized against 5000 repetitive pulses of 35 A IEC 61000-4-5 8/20 µs surge pulses at 125°C. The test is performed with less than 10 seconds between each pulse at high temperature to simulate worst case scenarios for fault regulation. After each surge pulse, the TVS0500 clamping voltage, breakdown voltage, and leakage are recorded to ensure that there is no variation or performance degradation. By ensuring robust, reliable, high temperature protection, the TVS0500 enables fault protection in applications that must withstand years of continuous operation with no performance change.

8.5 Device Functional Modes

8.5.1 Protection Specifications

The TVS0500 is specified according to both the IEC 61000-4-5 and IEC 61643-321 standards. This enables usage in systems regardless of which standard is required in relevant product standards or best matches measured fault conditions. The IEC 61000-4-5 standards requires protection against a pulse with a rise time of 8 µs and a half length of 20 µs, while the IEC 61643-321 standard requires protection against a much longer pulse with a rise time of 10 µs and a half length of 1000 µs.

Copyright © 2017–2019, Texas Instruments Incorporated

Device Functional Modes (continued)

The positive and negative surges are imposed to the TVS0500 by a combinational waveform generator (CWG) with a 2-Ω coupling resistor at different peak voltage levels. For powered on transient tests that need power supply bias, inductances are usually used to decouple the transient stress and protect the power supply. The TVS0500 is post tested by assuring that there is no shift in device breakdown or leakage at V_{rwm}.

In addition, the TVS0500 has been tested according to IEC 61000-4-5 to pass a ±2 kV surge test through a 42-Ω coupling resistor and a 0.5 µF capacitor. This test is a common test requirement for industrial signal I/O lines and the TVS0500 will serve an ideal protection solution for applications with that requirement.

The TVS0500 allow integrates IEC 61000-4-2 level 4 ESD Protection and 80 A of IEC 61000-4-4 EFT Protection. These combine to ensure that the device can protect against most transient conditions regardless of length or type.

For more information on TI's test methods for Surge, ESD, and EFT testing, reference TI's IEC 61000-4-x Testing Application Note

8.5.2 Minimal Derating

Unlike traditional diodes the TVS0500 has very little derating of max power dissipation and ensures robust performance up to 125°C, shown in 図 8. Traditional TVS diodes lose up to 50% of their current carrying capability when at high temperatures, so a surge pulse above 85°C ambient can cause failures that are not seen at room temperature. The TVS0500 prevents this and ensures that you will see the same level of protection regardless of temperature.

8.5.3 Transient Performance

During large transient swings, the TVS0500 will begin clamping the input signal to protect downstream conditions. While this prevents damage during fault conditions, it can cause leakage when the intended input signal has a fast slew rate. In order to keep power dissipation low and remove the chance of signal distortion, it is recommended to keep the slew rate of any input signal on the TVS0500 below 2.5 V/µs at room temperature and below 0.7 V/µs at 125°C shown in 図 9. Faster slew rates will cause the device to clamp the input signal and draw current through the device for a few microseconds, increasing the rise time of the signal. This will not cause any harm to the system or to the device, however if the fast input voltage swings occur regularly it can cause device overheating.

Copyright © 2017–2019, Texas Instruments Incorporated

9 Application and Implementation

注

Information in the following applications sections is not part of the TI component specification, and TI does not warrant its accuracy or completeness. TI's customers are responsible for determining suitability of components for their purposes. Customers should validate and test their design implementation to confirm system functionality.

9.1 Application Information

The TVS0500 can be used to protect any power, analog, or digital signal from transient fault conditions caused by the environment or other electrical components.

9.2 Typical Application

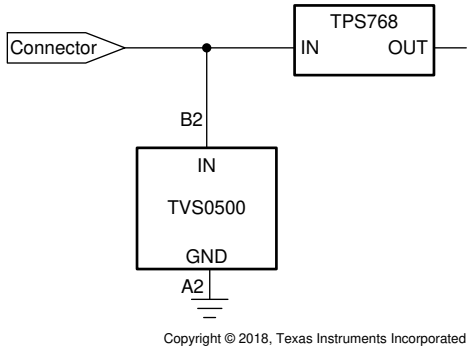

図 10. TVS0500 Application Schematic

9.2.1 Design Requirements

A typical operation for the TVS0500 would be protecting a nominal 5 V input to an LDO similar to 図 10. In this example, the TVS0500 is protecting the input to a TPS768, a standard 1 A LDO with an input voltage range of 2.7 V to 10 V. Without any input protection, if a surge event is caused by lightning, coupling, ringing, or any other fault condition this input voltage will rise to hundreds of volts for multiple microseconds, violating the absolute maximum input voltage and harming the device. An ideal surge protection diode will maximize the useable voltage range while still clamping at a safe level for the system, TI's Flat-Clamp technology provides the best protection solution.

9.2.2 Detailed Design Procedure

If the TVS0500 is in place to protect the device, during a surge event the voltage will rise to the breakdown of the diode at 7.9 V, and then the TVS0500 will turn on, shunting the surge current to ground. With the low dynamic resistance of the TVS0500, large amounts of surge current will have minimal impact on the clamping voltage. The dynamic resistance of the TVS0500 is around 30 mΩ, which means 30 A of surge current will cause a voltage raise of 30 A × 30 mΩ = 0.9 V. Because the device turns on at 7.9 V, this means the LDO input will be exposed to a maximum of 7.9 V + 0.9 V = 8.8 V during surge pulses, well within the absolute maximum input voltage. This ensures robust protection of your circuit.

The small size of the device also improves fault protection by lowering the effect of fault current coupling onto neighboring traces. The small form factor of the TVS0500 allows the device to be placed extremely close to the input connector, lowering the length of the path fault current will take through the system compared to larger protection solutions.

Finally, the low leakage of the TVS0500 will have low input power losses. At 5 V, the device will see typical 70 pA leakage for a constant power dissipation of less than 1 nW, a negligible quantity that will not effect overall efficiency metrics or add heating concerns.

Copyright © 2017–2019, Texas Instruments Incorporated

Typical Application (continued)

9.2.3 Configuration Options

The TVS0500 can be used in either unidirectional or bidirectional configuration. 図 10 shows unidirectional usage to protect an input. By placing two TVS0500's in series with reverse orientation, bidirectional operation can be used, allowing a working voltage of ±5 V. TVS0500 operation in bidirectional will be similar to unidirectional operation, with a minor increase in breakdown voltage and clamping voltage. The TVS3300 bidirectional performance has been characterized in the TVS3300 Configurations Characterization. While the TVS0500 in bidirectional configuration has not specifically been characterized, it will have similar relative changes to the TVS3300 in bidirectional configuration.

10 Power Supply Recommendations

The TVS0500 is a clamping device so there is no need to power it. To ensure the device functions properly do not violate the recommended V_{IN} voltage range (0 V to 5 V) .

Copyright © 2017–2019, Texas Instruments Incorporated

11 Layout

11.1 Layout Guidelines

The optimum placement is close to the connector. EMI during an ESD event can couple from the trace being struck to other nearby unprotected traces, resulting in early system failures. The PCB designer must minimize the possibility of EMI coupling by keeping any unprotected traces away from the protected traces which are between the TVS and the connector.

Route the protected traces straight.

Eliminate any sharp corners on the protected traces between the TVS0500 and the connector by using rounded corners with the largest radii possible. Electric fields tend to build up on corners, increasing EMI coupling.

11.2 Layout Example

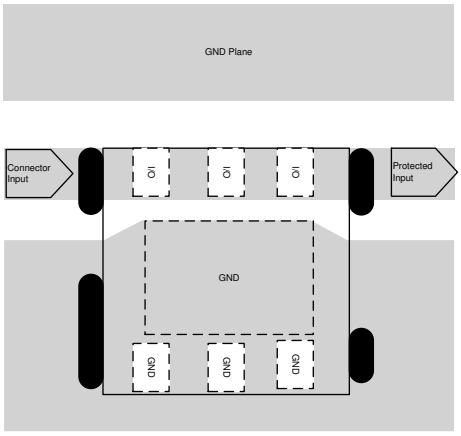

図 11. TVS0500 Layout

Copyright © 2017–2019, Texas Instruments Incorporated

12 デバイスおよびドキュメントのサポート

12.1 ドキュメントの更新通知を受け取る方法

ドキュメントの更新についての通知を受け取るには、ti.comのデバイス製品フォルダを開いてください。右上の「アラートを受け取る」をクリックして登録すると、変更されたすべての製品情報に関するダイジェストを毎週受け取れます。変更の詳細については、修正されたドキュメントに含まれている改訂履歴をご覧ください。

12.2 コミュニティ・リソース

TI E2E™ support forums are an engineer's go-to source for fast, verified answers and design help — straight from the experts. Search existing answers or ask your own question to get the quick design help you need.

Linked content is provided "AS IS" by the respective contributors. They do not constitute TI specifications and do not necessarily reflect TI's views; see TI's Terms of Use.

12.3 商標

E2E is a trademark of Texas Instruments.

12.4 静電気放電に関する注意事項



すべての集積回路は、適切なESD保護方法を用いて、取扱いと保存を行うようにして下さい。

静電気放電はわずかな性能の低下から完全なデバイスの故障に至るまで、様々な損傷を与えます。高精度の集積回路は、損傷に対して敏感であり、極めてわずかなパラメータの変化により、デバイスに規定された仕様に適合しなくなる場合があります。

12.5 Glossary

SLYZ022 — *TI Glossary*.

This glossary lists and explains terms, acronyms, and definitions.

13 メカニカル、パッケージ、および注文情報

以降のページには、メカニカル、パッケージ、および注文に関する情報が記載されています。この情報は、そのデバイスについて利用可能な最新のデータです。このデータは予告なく変更されることがあり、ドキュメントが改訂される場合もあります。本データシートのブラウザ版を使用されている場合は、画面左側の説明をご覧ください。

Copyright © 2017–2019, Texas Instruments Incorporated

PACKAGING INFORMATION

Orderable part number	Status (1)	Material type (2)	Package | Pins	Package qty | Carrier	RoHS (3)	Lead finish/ Ball material (4)	MSL rating/ Peak reflow (5)	Op temp (°C)	Part marking (6)
TVS0500DRVR	Active	Production	WSON (DRV) | 6	3000 | LARGE T&R	Yes	NIPDAU	Level-1-260C-UNLIM	-40 to 125	1HRH
TVS0500DRVR.A	Active	Production	WSON (DRV) | 6	3000 | LARGE T&R	Yes	NIPDAU	Level-1-260C-UNLIM	-40 to 125	1HRH
TVS0500DRVRG4	Active	Production	WSON (DRV) | 6	3000 | LARGE T&R	Yes	NIPDAU	Level-1-260C-UNLIM	-40 to 125	1HRH
TVS0500DRVRG4.A	Active	Production	WSON (DRV) | 6	3000 | LARGE T&R	Yes	NIPDAU	Level-1-260C-UNLIM	-40 to 125	1HRH

(1) **Status:** For more details on status, see our product life cycle.

(2) **Material type:** When designated, preproduction parts are prototypes/experimental devices, and are not yet approved or released for full production. Testing and final process, including without limitation quality assurance, reliability performance testing, and/or process qualification, may not yet be complete, and this item is subject to further changes or possible discontinuation. If available for ordering, purchases will be subject to an additional waiver at checkout, and are intended for early internal evaluation purposes only. These items are sold without warranties of any kind.

(3) **RoHS values:** Yes, No, RoHS Exempt. See the TI RoHS Statement for additional information and value definition.

(4) **Lead finish/Ball material:** Parts may have multiple material finish options. Finish options are separated by a vertical ruled line. Lead finish/Ball material values may wrap to two lines if the finish value exceeds the maximum column width.

(5) **MSL rating/Peak reflow:** The moisture sensitivity level ratings and peak solder (reflow) temperatures. In the event that a part has multiple moisture sensitivity ratings, only the lowest level per JEDEC standards is shown. Refer to the shipping label for the actual reflow temperature that will be used to mount the part to the printed circuit board.

(6) **Part marking:** There may be an additional marking, which relates to the logo, the lot trace code information, or the environmental category of the part.

Multiple part markings will be inside parentheses. Only one part marking contained in parentheses and separated by a "~" will appear on a part. If a line is indented then it is a continuation of the previous line and the two combined represent the entire part marking for that device.

Important Information and Disclaimer: The information provided on this page represents TI's knowledge and belief as of the date that it is provided. TI bases its knowledge and belief on information provided by third parties, and makes no representation or warranty as to the accuracy of such information. Efforts are underway to better integrate information from third parties. TI has taken and continues to take reasonable steps to provide representative and accurate information but may not have conducted destructive testing or chemical analysis on incoming materials and chemicals. TI and TI suppliers consider certain information to be proprietary, and thus CAS numbers and other limited information may not be available for release.

In no event shall TI's liability arising out of such information exceed the total purchase price of the TI part(s) at issue in this document sold by TI to Customer on an annual basis.

TAPE AND REEL INFORMATION

REEL DIMENSIONS

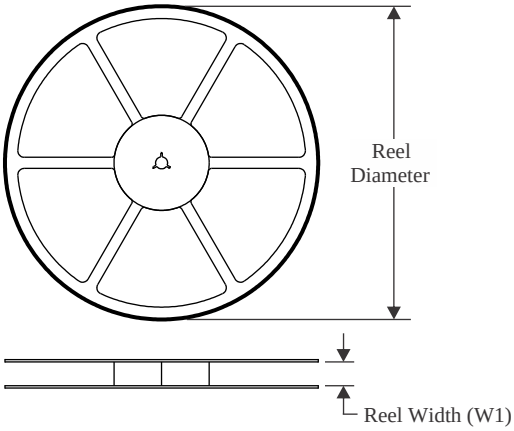

TAPE DIMENSIONS

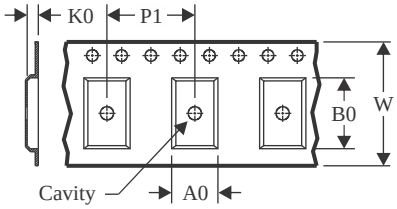

A0	Dimension designed to accommodate the component width
B0	Dimension designed to accommodate the component length
K0	Dimension designed to accommodate the component thickness
W	Overall width of the carrier tape
P1	Pitch between successive cavity centers

QUADRANT ASSIGNMENTS FOR PIN 1 ORIENTATION IN TAPE

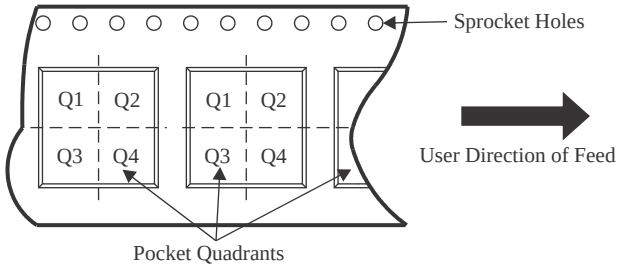

*All dimensions are nominal

Device	Package Type	Package Drawing	Pins	SPQ	Reel Diameter (mm)	Reel Width W1 (mm)	A0 (mm)	B0 (mm)	K0 (mm)	P1 (mm)	W (mm)	Pin1 Quadrant
TVS0500DRVR	WSON	DRV	6	3000	180.0	8.4	2.3	2.3	1.15	4.0	8.0	Q2
TVS0500DRVRG4	WSON	DRV	6	3000	180.0	8.4	2.3	2.3	1.15	4.0	8.0	Q2

TAPE AND REEL BOX DIMENSIONS

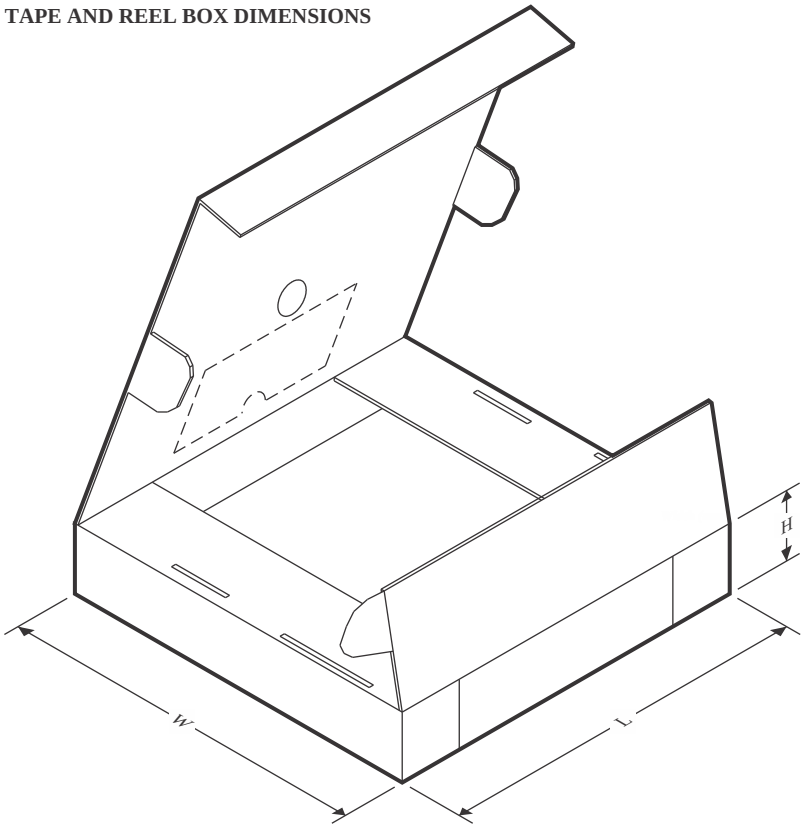

*All dimensions are nominal

Device	Package Type	Package Drawing	Pins	SPQ	Length (mm)	Width (mm)	Height (mm)
TVS0500DRVR	WSON	DRV	6	3000	210.0	185.0	35.0
TVS0500DRVRG4	WSON	DRV	6	3000	210.0	185.0	35.0

DRV 6 WSON - 0.8 mm max height

PLASTIC SMALL OUTLINE - NO LEAD

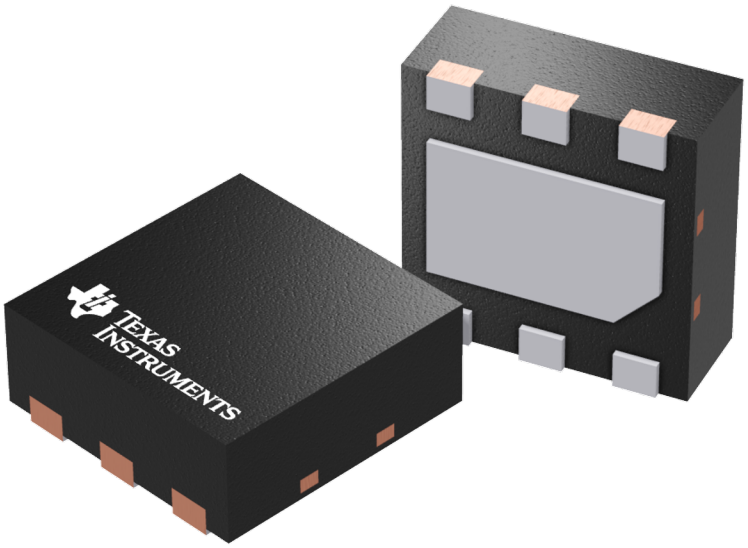

Images above are just a representation of the package family, actual package may vary.
Refer to the product data sheet for package details.

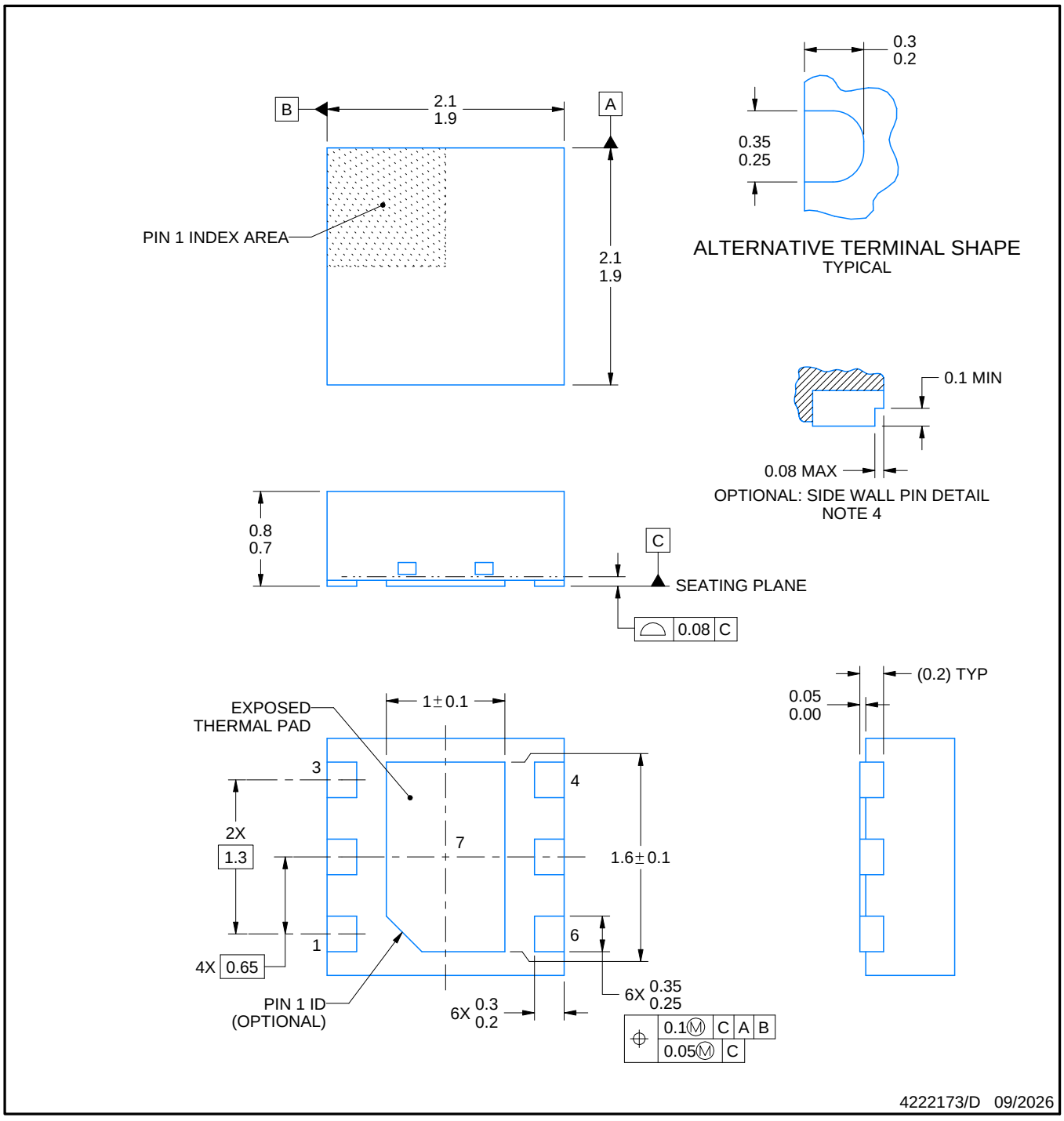

NOTES:

1. All linear dimensions are in millimeters. Any dimensions in parenthesis are for reference only. Dimensioning and tolerancing per ASME Y14.5M.
2. This drawing is subject to change without notice.
3. The package thermal pad must be soldered to the printed circuit board for thermal and mechanical performance.
4. Minimum 0.1 mm solder wetting on pin side wall. Available for wettable flank version only.

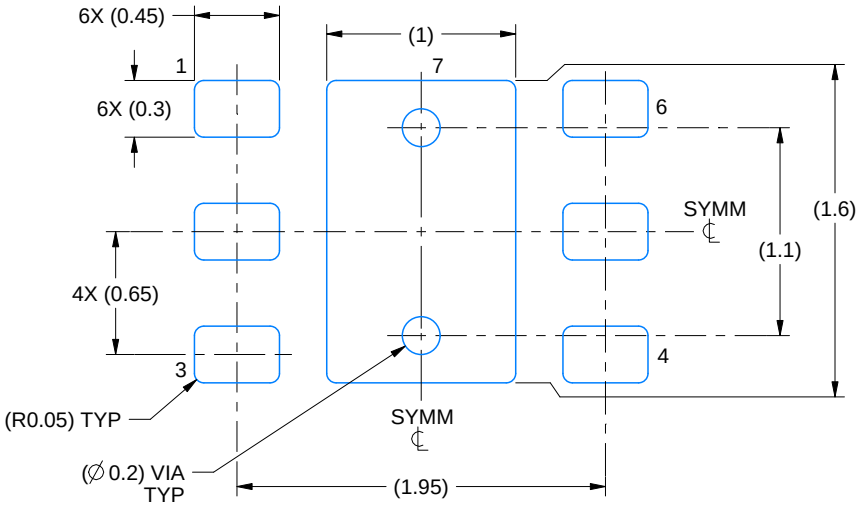

LAND PATTERN EXAMPLE
SCALE:25X

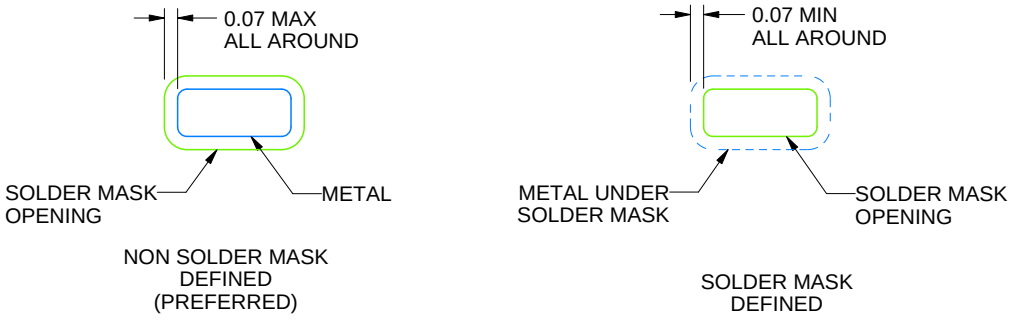

SOLDER MASK DETAILS

4222173/D 09/2026

NOTES: (continued)

5. This package is designed to be soldered to a thermal pad on the board. For more information, see Texas Instruments literature number SLUA271 (www.ti.com/lit/slua271).
6. Vias are optional depending on application, refer to device data sheet. If some or all are implemented, recommended via locations are shown.

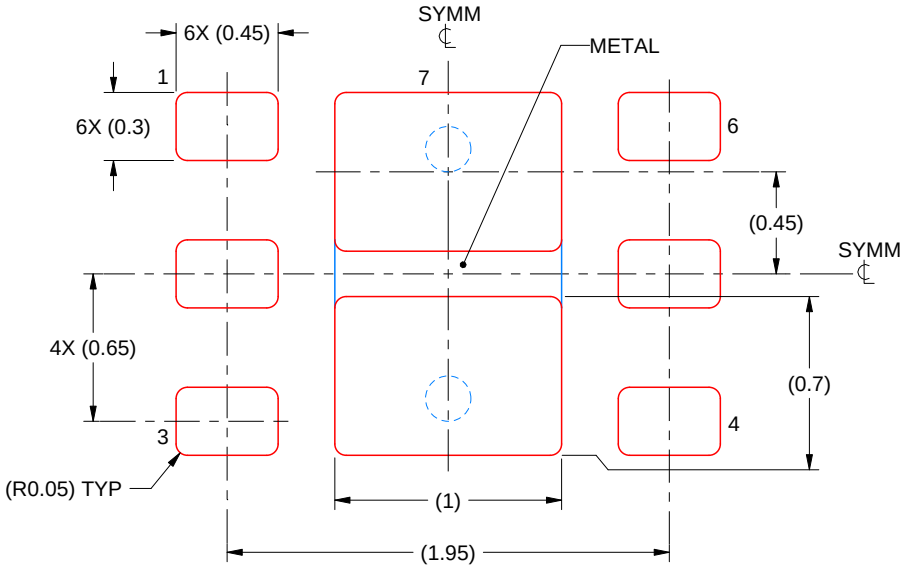

SOLDER PASTE EXAMPLE
BASED ON 0.125 mm THICK STENCIL

EXPOSED PAD #7
88% PRINTED SOLDER COVERAGE BY AREA UNDER PACKAGE
SCALE:30X

4222173/D 09/2026

NOTES: (continued)

7. Laser cutting apertures with trapezoidal walls and rounded corners may offer better paste release. IPC-7525 may have alternate design recommendations.

重要なお知らせと免責事項

TI は、技術データと信頼性データ (データシートを含みます)、設計リソース (リファレンス デザインを含みます)、アプリケーションや設計に関する各種アドバイス、Web ツール、安全性情報、その他のリソースを、欠陥が存在する可能性のある「現状のまま」提供しており、商品性および特定目的に対する適合性の黙示保証、第三者の知的財産権の非侵害保証を含むいかなる保証も、明示的または黙示的にかかわらず拒否します。

これらのリソースは、TI 製品を使用する設計の経験を積んだ開発者への提供を意図したものです。(1) お客様のアプリケーションに適した TI 製品の選定、(2) お客様のアプリケーションの設計、検証、試験、(3) お客様のアプリケーションに該当する各種規格や、その他のあらゆる安全性、セキュリティ、規制、または他の要件への確実な適合に関する責任を、お客様のみが単独で負うものとします。

上記の各種リソースは、予告なく変更される可能性があります。これらのリソースは、リソースで説明されている TI 製品を使用するアプリケーションの開発の目的でのみ、TI はその使用をお客様に許諾します。これらのリソースに関して、他の目的で複製することや掲載することは禁止されています。TI や第三者の知的財産権のライセンスが付与されている訳ではありません。お客様は、これらのリソースを自身で使用した結果発生するあらゆる申し立て、損害、費用、損失、責任について、TI およびその代理人を完全に補償するものとし、TI は一切の責任を拒否します。

TI の製品は、 TI の販売条件 、 TI の総合的な品質ガイドライン 、 ti.com または TI 製品などに関連して提供される他の適用条件に従い提供されます。TI がこれらのリソースを提供することは、適用される TI の保証または他の保証の放棄の拡大や変更を意味するものではありません。 TI がカスタム、またはカスタマー仕様として明示的に指定していない限り、TI の製品は標準的なカタログに掲載される汎用機器です。

お客様がいかなる追加条項または代替条項を提案する場合も、TI はそれらに異議を唱え、拒否します。

Copyright © 2026, Texas Instruments Incorporated

最終更新日：2025 年 10 月