高速 PWM コントローラ

1 特長

- UC3823/UC3825 PWM の改良バージョン
- 電圧モードまたは電流モードの制御方式と互換
- 最大 1 MHz のスイッチング周波数で実用的な動作
- 出力への伝搬遅延 50ns
- 大電流のデュアル・トーテム・ポール出力 (2A ピーク)
- トリムされた発振器放電電流
- 100μA の低スタートアップ電流
- パルス単位の電流制限コンパレータ
- フル・サイクル再起動付きのラッチ付き過電流コンパレータ

2 概要

UC3823A と UC3823B、UC3825A と UC3825B ファミリの PWM コントローラは、標準の UC3823 と UC3825 ファミリの改良版です。いくつかの回路ブロックで性能が強化されています。エラー・アンプのゲイン帯域幅積は 12MHz、入力オフセット電圧は 2mV です。電流制限スレッショルドは、公差 5% が保証されています。発振器の放電電流は 10mA で規定されており、正確なデッドタイム制御が可能です。周波数精度が 6% に向上しています。スタートアップ時の消費電流は標準値 100μA で、オフライン・アプリケーションに最適です。出力ドライバは、スタートアップの電流仕様を増やすことなく UVLO 時に電流をアクティブにシンクするよう再設計されています。さらに、各出力は遷移中に 2A のピーク電流を供給できます。

このファミリでは、機能の改善も実装されています。UC3825 のシャットダウン・コンパレータは、スレッショルドが 1.2V の高速過電流コンパレータになりました。この過電流コンパレータはラッチをセットし、これによって再起動が許可される前にソフト・スタート・コンデンサが完全に放電されることを保証します。フォルト・ラッチがセットされている間、出力は Low 状態になります。連続的に障害が発生した場合、ソフト・スタート・コンデンサは放電前に完全に充電され、フォルトの頻度が設計されたソフト・スタート期間を超えないことを保証します。UC3825 の CLOCK ピンは CLK/LEB に変更されました。このピンは、クロック出力とリーディング・エッジ・ブランキング調整の機能を組み合わせたもので、簡単に接続できるようバッファされています。

UC3825A と UC3825B は、UC3825 と同じピン構成で、デュアル交互出力が搭載されています。UC3823A と UC3823B の出力は位相で動作し、デューティ・サイクルは 0 から 100% 未満です。UC3823A と UC3823B のピン構成は UC3823 と同じですが、ピン 11 は電流制限コンパレータへのリファレンス電圧ピンではなく、出力ピンになりました。A バージョンの部品の UVLO スレッショルドは、元の UC3823 および UC3825 と同じです。B バージョンの UVLO スレッショルドは 16V と 10V で、オフライン・アプリケーションでの使いやすさを意図しています。

詳細な技術情報とアプリケーション情報については、アプリケーション・ノート「UC3823A、B および UC3825A、B 拡張世代の PWM コントローラ」(SLUA125) を参照してください。

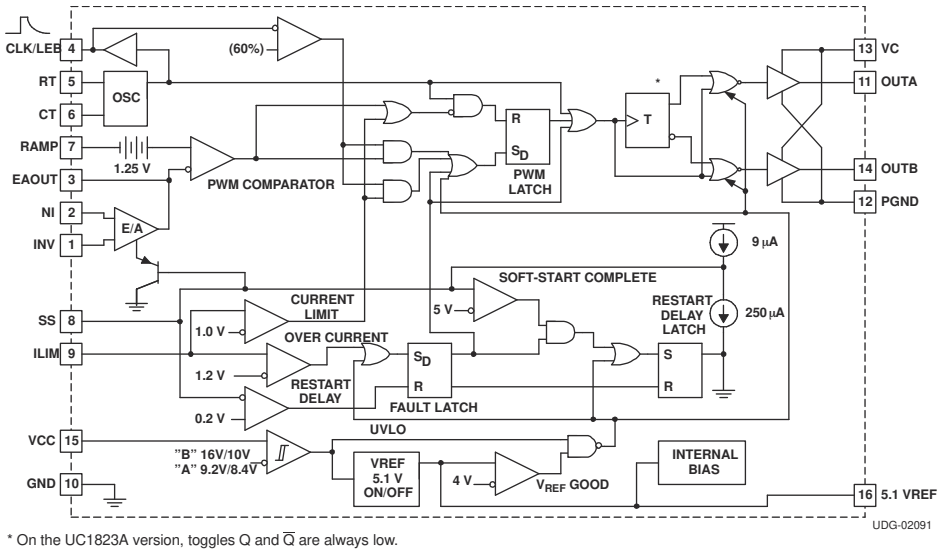

* On the UC1823A version, toggles Q and $\overline{Q}$ are always low.

図 2-1. ブロック図

英語版の TI 製品についての情報を翻訳したこの資料は、製品の概要を確認する目的で便宜的に提供しているものです。該当する正式な英語版の最新情報は、www.ti.com で閲覧でき、その内容が常に優先されます。TI では翻訳の正確性および妥当性につきましては一切保証いたしません。実際の設計などの前には、必ず最新版の英語版をご参照くださいますようお願いいたします。

Table of Contents

1 特長 ... 1
2 概要 ... 1
3 Revision History ... 2
4 Ordering Information ... 3
5 Pin Configuration and Functions ... 3
Terminal Functions ... 4
6 Specifications ... 5
6.1 ABSOLUTE MAXIMUM RATINGS ... 5
6.2 Thermal Information ... 5
6.3 ELECTRICAL CHARACTERISTICS ... 6
6.4 ELECTRICAL CHARACTERISTICS ... 7
7 Application and Implementation ... 8
7.1 LEADING EDGE BLANKING ... 8
7.2 UVLO、ソフト・スタート、フォルト管理 ... 9
7.3 ACTIVE LOW OUTPUTS DURING UVLO ... 10
7.4 CONTROL METHODS ... 10
7.5 SYNCHRONIZATION ... 10
7.6 HIGH CURRENT OUTPUTS ... 11
7.7 GROUND PLANES ... 12
7.8 OPEN LOOP TEST CIRCUIT ... 13
8 Device and Documentation Support ... 14
8.1 Documentation Support ... 14
8.2 Receiving Notification of Documentation Updates ... 14
8.3 サポート・リソース ... 14
8.4 Trademarks ... 14
8.5 Electrostatic Discharge Caution ... 14
8.6 Glossary ... 14
9 Mechanical, Packaging, and Orderable Information ... 15

3 Revision History

資料番号末尾の英字は改訂を表しています。その改訂履歴は英語版に準じています。

Changes from Revision E (September 2010) to Revision F (August 2022)	Page
• Added SOIC package	3
• Added Thermal Information	5

Copyright © 2022 Texas Instruments Incorporated

4 Ordering Information

T_A	MAXIMUM DUTY CYCLE	UVLO					
		9.2 V / 8.4 V			16 V / 10 V		
		SOIC-16 (1) (DW)	PDIP-16 (N)	PLCC-20(1) (Q)	SOIC-16 (DW)	PDIP-16 (N)	PLCC-20 (1) (Q)
40°C to 85°C	< 100%	UC2823ADW	UC2823AN	UC2823AQ	UC2823BDW	UC2823BN	
	< 50%	UC2825ADW	UC2825AN	UC2825AQ	UC2825BDW	UC2825BN	
0°C to 70°C	< 100%	UC3823ADW	UC3823AN	UC3823AQ	UC3823BDW	UC3823BN	
	< 50%	UC3825ADW	UC3825AN	UC3825AQ	UC3825BDW	UC3825BN	UC3825BQ

(1) The DW and Q packages are also available taped and reeled. Add TR suffix to the device type (i.e., UC2823ADWR). To order quantities of 1000 devices per reel for the Q package and 2000 devices per reel for the DW package.

5 Pin Configuration and Functions

T_A	MAXIMUM DUTY CYCLE	UVLO (9.2 V/8.4 V)	
		CDIP-16 (J)	LCCC-20 (L)
55°C to 125°C	< 100%	UC1823AJ, UC1823AJ883B, UC1823AJQMLV	UC1823AL, UC1823AL883B
	< 50%	UC1825AJ, UC1825AJ883B, UC1825AJQMLV	UC1825AL, UC1825AL883B, UC1825ALQMLV

DW, J, OR N PACKAGES (TOP VIEW)

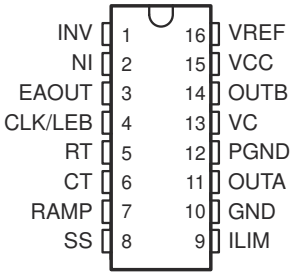

Q OR L PACKAGES (TOP VIEW)

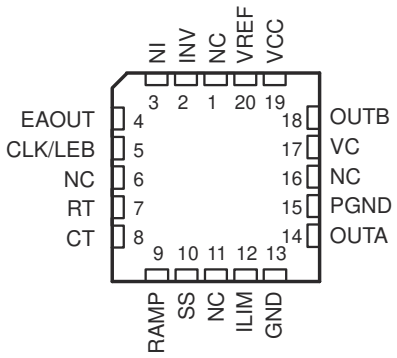

NC = no connection

Terminal Functions

TERMINAL			I/O	DESCRIPTION
NAME	NO.			
	J, N, or DW	Q or L		
CLK/LEB	4	5	O	Output of the internal oscillator
CT	6	8	I	Timing capacitor connection pin for oscillator frequency programming. The timing capacitor should be connected to the device ground using minimal trace length.
EAOUT	3	4	O	Output of the error amplifier for compensation
GND	10	13		Analog ground return pin
ILIM	9	12	I	Input to the current limit comparator
INV	1	2	I	Inverting input to the error amplifier
NI	2	3	I	Non-inverting input to the error amplifier
OUTA	11	14	O	High current totem pole output A of the on-chip drive stage.
OUTB	14	18	O	High current totem pole output B of the on-chip drive stage.
PGND	12	15		Ground return pin for the output driver stage
RAMP	7	9	I	Non-inverting input to the PWM comparator with 1.25-V internal input offset. In voltage mode operation, this serves as the input voltage feed-forward function by using the CT ramp. In peak current mode operation, this serves as the slope compensation input.
RT	5	7	I	Timing resistor connection pin for oscillator frequency programming
SS	8	10	I	Soft-start input pin which also doubles as the maximum duty cycle clamp.
VC	13	17		Power supply pin for the output stage. This pin should be bypassed with a 0.1-μF monolithic ceramic low ESL capacitor with minimal trace lengths.
VCC	15	19		Power supply pin for the device. This pin should be bypassed with a 0.1-μF monolithic ceramic low ESL capacitor with minimal trace lengths
VREF	16	20	O	5.1-V reference. For stability, the reference should be bypassed with a 0.1-μF monolithic ceramic low ESL capacitor and minimal trace length to the ground plane.

Copyright © 2022 Texas Instruments Incorporated

6 Specifications

6.1 ABSOLUTE MAXIMUM RATINGS

over operating free-air temperature range unless otherwise noted[1]

			VALUE	UNIT
V_{IN}	Supply voltage,	VC, VCC	22	V
I_O	Source or sink current,DC	OUTA, OUTB	0.5	A
I_O	Source or sink current, pulse (0.5 µs)	OUTA, OUTB	2.2	A
	Analog inputs	INV, NI, RAMP	–0.3 to 7	V
		ILIM, SS	–0.3 to 6	V
	Power ground	PGND	±0.2	V
I_{CLK}	Clock output current	CLK/LEB	–5	mA
$I_{O(EA)}$	Error amplifier output current	EAOUT	5	mA
I_{SS}	Soft-start sink current	SS	20	mA
I_{OSC}	Oscillator charging current	RT	–5	mA
T_J	Operating virtual junction temperature range		–55 to 150	°C
T_{stg}	Storage temperature		–65 to 150	°C
	Lead temperature 1,6 mm (1/16 inch) from case for 10 seconds		–55 to 150	°C
t_{STG}	Storage temperature		–65 to 150	°C
	Lead temperature 1,6 mm (1/16 inch) from cases for 10 seconds		300	°C

(1) Stresses beyond those listed under *absolute maximum ratings* may cause permanent damage to the device. These are stress ratings only, and functional operation of the device at these or any other conditions beyond those indicated under *recommended operating conditions* is not implied. Exposure to absolute-maximum-rated conditions for extended periods may affect device reliability.

6.2 Thermal Information

PACKAGE	θ_{JA}	θ_{JC}
J-16	80-120	28[2]
N-16	90[1]	45
DW-16	45-90[1]	25
PLCC-20 (Q package)	43-75[1]	34
LCC-20 (L package)	70-80	20[2]

(1) Specified θ_{JA} (junction to ambient) is for devices mounted to 5 in2 FR4 PC board with one ounce copper where noted. When resistance range is given, lower values are for 5 in2 aluminum PC board. Test PWB was 0.062" thick and typically used 0.635 mm trace widths for power packages and 1.3 mm trace widths for non-power packages with 100 x 100 mil probe land area at the end of each trace.

(2) θJC data values stated were derived from MIL-STD-1835B. MIL-STD-1835B states, "The baseline values shown are worst case (mean + 2s) for a 60 x 60 mil microcircuit device silicon die and applicable for devices with die sizes up to 14400 square mils. For device die size greater than 14400 square mils use the following values; dual-in-line, 11°C/W; flat pack, 10°C/W; pin grid array, 10°C/W".

Copyright © 2022 Texas Instruments Incorporated

6.3 ELECTRICAL CHARACTERISTICS

T_A = –55°C to 125°C for the UC1823A/UC1825A, T_A = –40°C to 85°C for the UC2823x/UC2825x, T_A = 0°C to 70°C for the UC3823x/UC3825x, R_T = 3.65 kΩ, C_T = 1 nF, V_{CC} = 12 V, T_A = T_J (unless otherwise noted)

PARAMETER		TEST CONDITIONS	MIN	TYP	MAX	UNIT
REFERENCE, V_{REF}						
V_O	Ouput voltage range	T_J = 25°C, I_O = 1 mA	5.05	5.1	5.15	V
	Line regulation	12 V ≤ VCC ≤ 20 V		2	15	mV
	Load regulation	1 mA ≤ I_O ≤ 10 mA		5	20	
	Total output variation	Line, load, temperature	5.03		5.17	V
	Temperature stability[(1)]	$T_{(min)}$ < T_A < $T_{(max)}$		0.2	0.4	mV/°C
	Output noise voltage[(1)]	10 Hz < f < 10 kHz		50		μV_{RMS}
	Long term stability[(1)]	T_J = 125°C, 1000 hours		5	25	mV
	Short circuit current	VREF = 0 V	30	60	90	mA
OSCILLATOR						
f_{OSC}	Initial accuracy[(1)]	T_J = 25°C	375	400	425	kHz
		R_T = 6.6 kΩ, C_T = 220 pF, T_A = 25°C	0.9	1	1.1	MHz
	Total variation[(1)]	Line, temperature	350		450	kHz
		R_T = 6.6 kΩ, C_T = 220 pF	0.85		1.15	MHz
	Voltage stability	12 V < VCC < 20 V			1%	
	Temperature stability[(1)]	$T_{(min)}$ < T_A < $T_{(max)}$		±5%		
	High-level output voltage, clock		3.7	4		V
	Low-level output voltage, clock			0	0.2	
	Ramp peak		2.6	2.8	3	
	Ramp valley		0.7	1	1.25	
	Ramp valley-to-peak		1.6	1.8	2	
I_{OSC}	Oscillator discharge current	R_T = OPEN, V_{CT} = 2 V	9	10	11	mA
ERROR AMPLIFIER						
	Input offset voltage			2	10	mV
	Input bias current			0.6	3	μA
	Input offset current			0.1	1	
	Open loop gain	1 V < V_O < 4 V	60	95		dB
CMRR	Common mode rejection ratio	1.5 V < V_{CM} < 5.5 V	75	95		
PSRR	Power supply rejection ratio	12 V < V_{CC} < 20 V	85	110		
$I_{O(sink)}$	Output sink current	V_{EAOUT} = 1 V	1	2.5		mA
$I_{O(src)}$	Output source current	V_{EAOUT} = 4 V		–1.3	–0.5	
	High-level output voltage	I_{EAOUT} = –0.5 mA	4.5	4.7	5	V
	Low-level output voltage	I_{EAOUT} = –1 mA	0	0.5	1	
	Gain bandwidth product	f = 200 kHz	6	12		Mhz
	Slew rate[(1)]		6	9		V/μs

(1) Ensured by design. Not production tested.

Copyright © 2022 Texas Instruments Incorporated

6.4 ELECTRICAL CHARACTERISTICS

T_A = –55°C to 125°C for the UC1823A/UC1825A, T_A = –40°C to 85°C for the UC2823x/UC2825x, T_A = 0°C to 70°C for the UC3823x/UC3825x, R_T = 3.65 kΩ, C_T = 1 nF, V_{CC} = 12 V, T_A = T_J (unless otherwise noted)

PARAMETER		TEST CONDITIIONS	MIN	TYP	MAX	UNIT
PWM COMPARATOR						
I_{BIAS}	Bias current, RAMP	V_{RAMP} = 0 V		–1	–8	µA
	Minimum duty cycle				0%	
	Maximum duty cycle		85%			
t_{LEB}	Leading edge blanking time	R_{LEB} = 2 kΩ, C_{LEB} = 470 pF	300	375	450	ns
R_{LEB}	Leading edge blanking resistance	$V_{CLK/LEB}$ = 3 V	8.5	10.0	11.5	kΩ
V_{ZDC}	Zero dc threshold voltage, EAOUT	V_{RAMP} = 0 V	1.10	1.25	1.4	V
t_{DELAY}	Delay-to-output time(1)	V_{EAOUT} = 2.1 V, V_{ILIM} = 0 V to 2 V step		50	80	ns
CURRENT LIMIT / START SEQUENCE / FAULT						
I_{SS}	Soft-start charge current	V_{SS}= 2.5 V	8	14	20	µA
V_{SS}	Full soft-start threshold voltage		4.3	5		V
I_{DSCH}	Restart discharge current	V_{SS}= 2.5 V	100	250	350	µA
I_{SS}	Restart threshold voltage			0.3	0.5	V
I_{BIAS}	ILIM bias current	V_{ILIM} = 0 V to 2 V step			15	µA
I_{CL}	Current limit threshold voltage		0.95	1	1.05	V
	Overcurrent threshold voltage		1.14	1.2	1.26	
t_d	Delay-to-output time, ILIM(1)	V_{ILIM} = 0 V to 2 V step		50	80	ns
OUTPUT						
	Low-level output saturation voltage	I_{OUT} = 20 mA		0.25	0.4	V
		I_{OUT} = 200 mA		1.2	2.2	
	High-level output saturation voltage	I_{OUT} = -20 mA		1.9	2.9	
		I_{OUT} = -200 mA		2	3	
t_r, t_f	Rise/fall time(1)	C_L = 1 nF		20	45	ns
UNDERVOLTAGE LOCKOUT (UVLO)						
	Start threshold voltage	UC2823B, UC2825B, UC3825B, UC3825B		16	17	V
		UC1823A, UC1825A, UC2823A, UC2825A UC3825A, UC3825A	8.4	9.2	9.6	
	Stop threshold voltage	UC2823B, UC2825B, UC3825B, UC3825B	9	10		
	OVLO hysteresis	UC1823A, UC1825A, UC2823A, UC2825A UC3825A, UC3825A	0.4	0.8	1.2	
		UC2823B, UC2825B, UC3825B, UC3825B	5	6	7	
SUPPLY CURRENT						
I_{su}	Startup current	VC = VCC = V_{TH}(start) –0.5 V		100	300	µA
I_{CC}	Input current			28	36	mA

(1) Ensured by design. Not production tested.

7 Application and Implementation

注

Information in the following applications sections is not part of the TI component specification, and TI does not warrant its accuracy or completeness. TI's customers are responsible for determining suitability of components for their purposes, as well as validating and testing their design implementation to confirm system functionality.

7.1 LEADING EDGE BLANKING

The UC3823A, UC2823B, UC3825A, and UC3825B perform fixed frequency pulse width modulation control. The UC3823A, and UC3823B outputs operate together at the switching frequency and can vary from zero to some value less than 100%. The UC3825A and UC3825B outputs are alternately controlled. During every other cycle, one output is off. Each output then switches at one-half the oscillator frequency, varying in duty cycle from 0 to less than 50%.

To limit maximum duty cycle, the internal clock pulse blanks both outputs low during the discharge time of the oscillator. On the falling edge of the clock, the appropriate output(s) is driven high. The end of the pulse is controlled by the PWM comparator, current limit comparator, or the overcurrent comparator.

Normally the PWM comparator senses a ramp crossing a control voltage (error amplifier output) and terminates the pulse. Leading edge blanking (LEB) causes the PWM comparator to be ignored for a fixed amount of time after the start of the pulse. This allows noise inherent with switched mode power conversion to be rejected. The PWM ramp input may not require any filtering as result of leading edge blanking.

To program a leading edge blanking (LEB) period, connect a capacitor, C, to CLK/LEB. The discharge time set by C and the internal 10-kΩ resistor determines the blanked interval. The 10-kΩ resistor has a 10% tolerance. For more accuracy, an external 2-kΩ 1% resistor (R) can be added, resulting in an equivalent resistance of 1.66 kΩ with a tolerance of 2.4%. The design equation is:

$$t_{LEB} = 0.5 \times \left(R \parallel 10\ k\Omega\right) \times C \tag{1}$$

Values of R less than 2 kΩ should not be used.

Leading edge blanking is also applied to the current limit comparator. After LEB, if the ILIM pin exceeds the 1-V threshold, the pulse is terminated. The overcurrent comparator, however, is not blanked. It catches catastrophic overcurrent faults without a blanking delay. Any time the ILIM pin exceeds 1.2 V, the fault latch is set and the outputs driven low. For this reason, some noise filtering may be required on the ILIM pin.

Copyright © 2022 Texas Instruments Incorporated

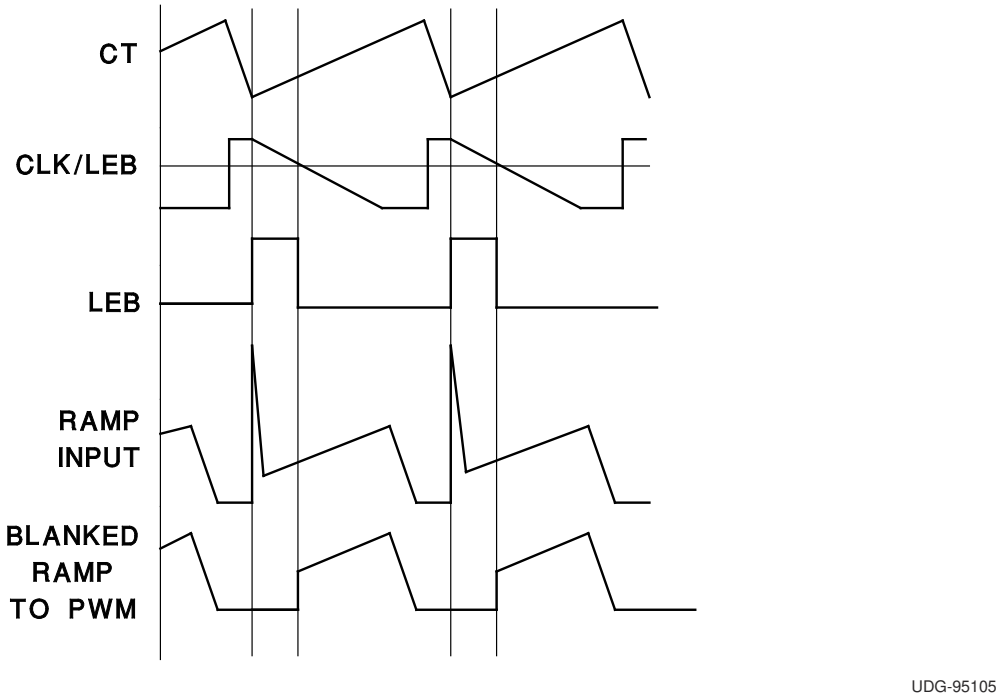

図 7-1. Leading Edge Blanking Operational Waveforms

7.2 UVLO、ソフト・スタート、フォルト管理

ソフト・スタートは、SS ピンのコンデンサでプログラムされます。電源投入時には SS が放電されます。SS が Low のとき、エラー・アンプの出力も強制的に Low になります。内部の 9μA ソースが SS ピンを充電している間、エラー・アンプの出力は、閉ループ・レギュレーションが行われるまで SS ピンに追従します。

ILIM が 1.2V を超えるとフォルト・ラッチがセットされ、出力ピンが Low に駆動されます。その後、ソフト・スタート・コンデンサは 250μA の電流シンクによって放電されます。ソフト・スタートが完全に放電され、ILIM が 1.2V 未満になるまで、それ以上の出力パルスは許容されません。ILIM が 1.2V 未満になるとフォルト・ラッチがリセットされ、チップがソフト・スタートを実行します。

ソフト・スタート時にフォルト・ラッチがセットされた場合、出力は直ちに終了しますが、ソフト・スタート・コンデンサは一度完全に充電されるまで放電しません。これによって、連続的にフォルトが発生した場合にヒカップ間隔が制御されます。

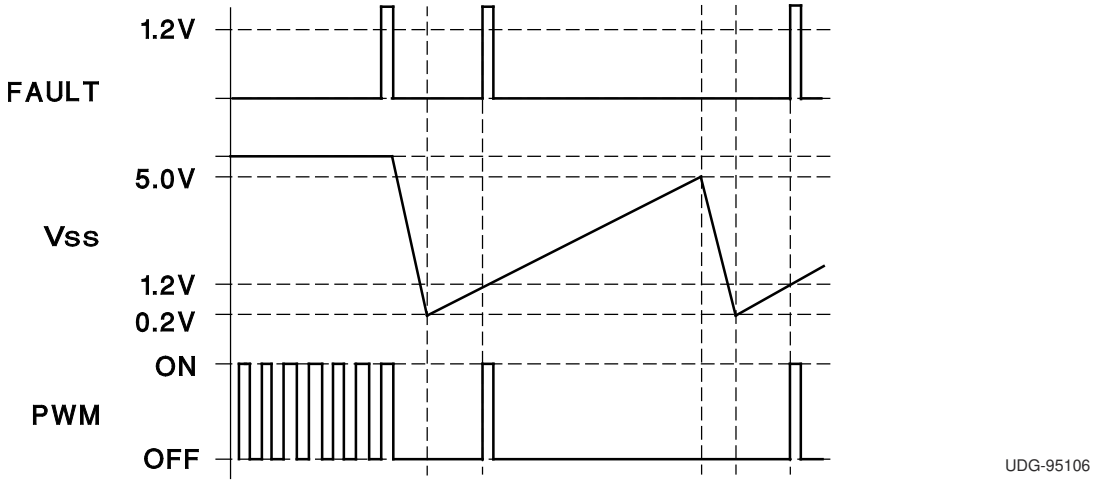

図 7-2. ソフト・スタートとフォルトの波形

7.3 ACTIVE LOW OUTPUTS DURING UVLO

The UVLO function forces the outputs to be low and considers both VCC and VREF before allowing the chip to operate.

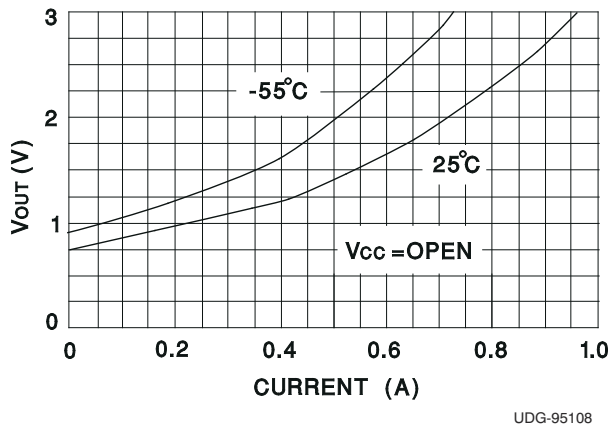

図 7-3. Output Voltage vs Output Current

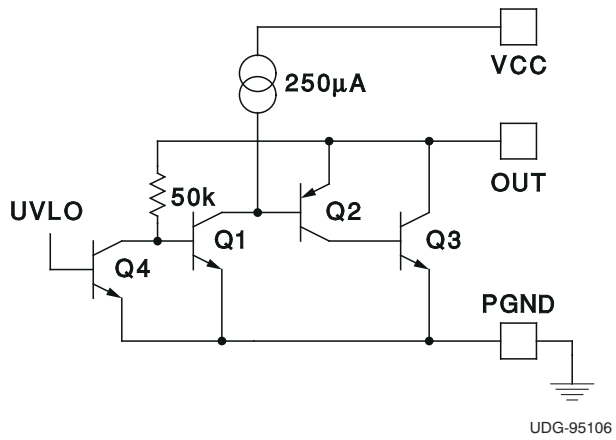

図 7-4. Output V and I During UVLO

7.4 CONTROL METHODS

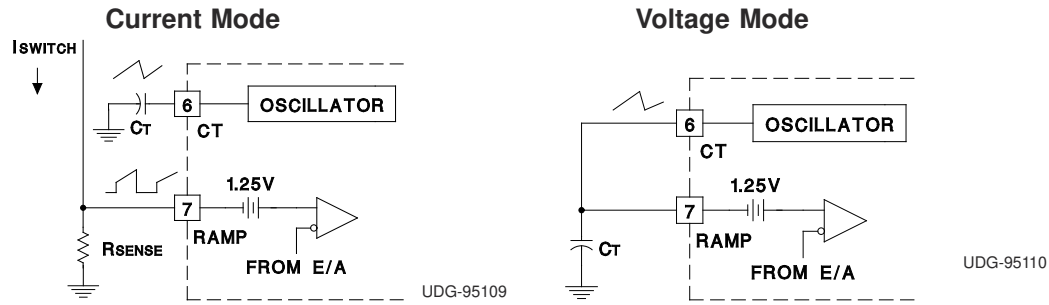

図 7-5. Control Methods

7.5 SYNCHRONIZATION

The oscillator can be synchronized by an external pulse inserted in series with the timing capacitor. Program the free running frequency of the oscillator to be 10% to 15% slower than the desired synchronous frequency. The pulse width should be greater than 10 ns and less than half the discharge time of the oscillator. The rising edge of the CLK/LEB pin can be used to generate a synchronizing pulse for other chips. Note that the CLK/LEB pin no longer accepts an incoming synchronizing signal.

Copyright © 2022 Texas Instruments Incorporated

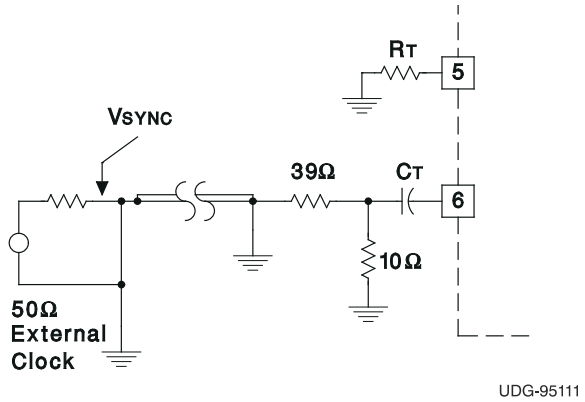

図 7-6. General Oscillator Synchronization

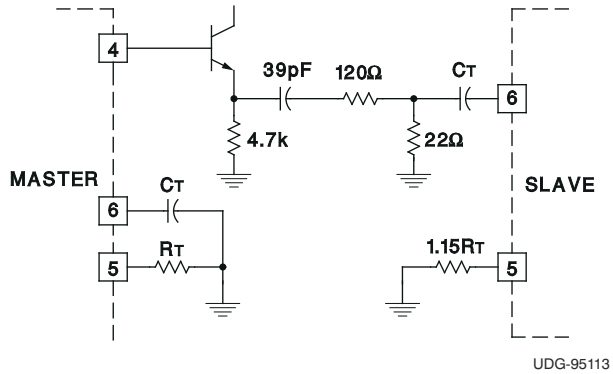

図 7-7. Two Unit Interface

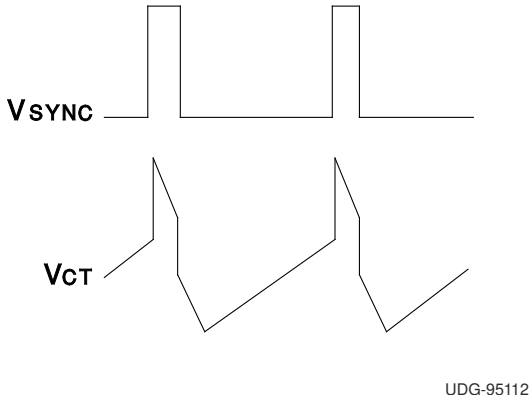

図 7-8. Operational Waveforms

7.6 HIGH CURRENT OUTPUTS

Each totem pole output of the UC3823A and UC3823AB, UC3825A, and UC3825B can deliver a 2-A peak current into a capacitive load. The output can slew a 1000-pF capacitor by 15 V in approximately 20 ns. Separate collector supply (VC) and power ground (PGND) pins help decouple the device's analog circuitry from the high-power gate drive noise. The use of 3-A Schottky diodes (1N5120, USD245, or equivalent) as shown in the 図 7-10 from each output to both VC and PGND are recommended. The diodes clamp the output swing to the supply rails, necessary with any type of inductive/capacitive load, typical of a MOSFET gate. Schottky diodes must be used because a low forward voltage drop is required. DO NOT USE standard silicon diodes.

Although they are *single-ended* devices, two output drivers are available on the UC3823A and UC3823B devices. These can be *paralleled* by the use of a 0.5 Ω (noninductive) resistor connected in series with each output for a combined peak current of 4 A.

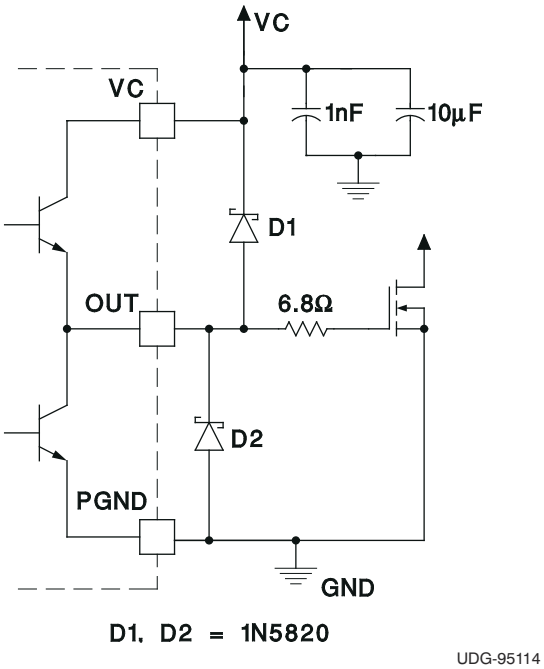

図 7-9. Power MOSFET Drive Circuit

7.7 GROUND PLANES

Each output driver of these devices is capable of 2-A peak currents. Careful layout is essential for correct operation of the chip. A ground plane must be employed. A unique section of the ground plane must be designated for high di/dt currents associated with the output stages. This point is the power ground to which the PGND pin is connected. Power ground can be separated from the rest of the ground plane and connected at a single point, although this is not necessary if the high di/dt paths are well understood and accounted for. VCC should be bypassed directly to power ground with a good high frequency capacitor. The sources of the power MOSFET should connect to power ground as should the return connection for input power to the system and the bulk input capacitor. The output should be clamped with a high current Schottky diode to both VCC and PGND. Nothing else should be connected to power ground.

VREF should be bypassed directly to the signal portion of the ground plane with a good high frequency capacitor. Low ESR/ESL ceramic 1-mF capacitors are recommended for both VCC and VREF. All analog circuitry should likewise be bypassed to the signal ground plane.

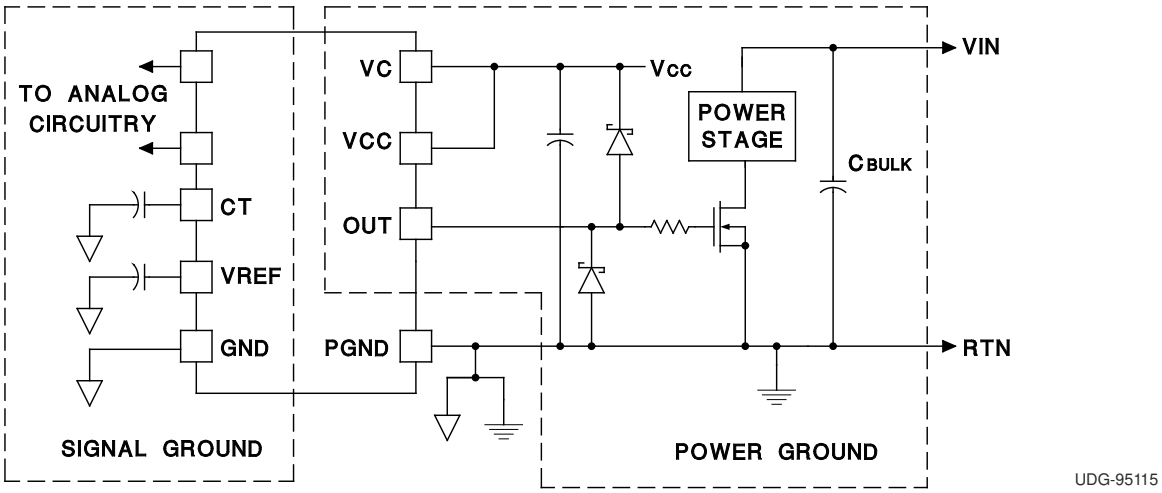

図 7-10. Ground Planes Diagram

Copyright © 2022 Texas Instruments Incorporated

7.8 OPEN LOOP TEST CIRCUIT

This test fixture is useful for exercising many functions of this device family and measuring their specifications. As with any wideband circuit, careful grounding and bypass procedures should be followed. The use of a ground plane is highly recommended.

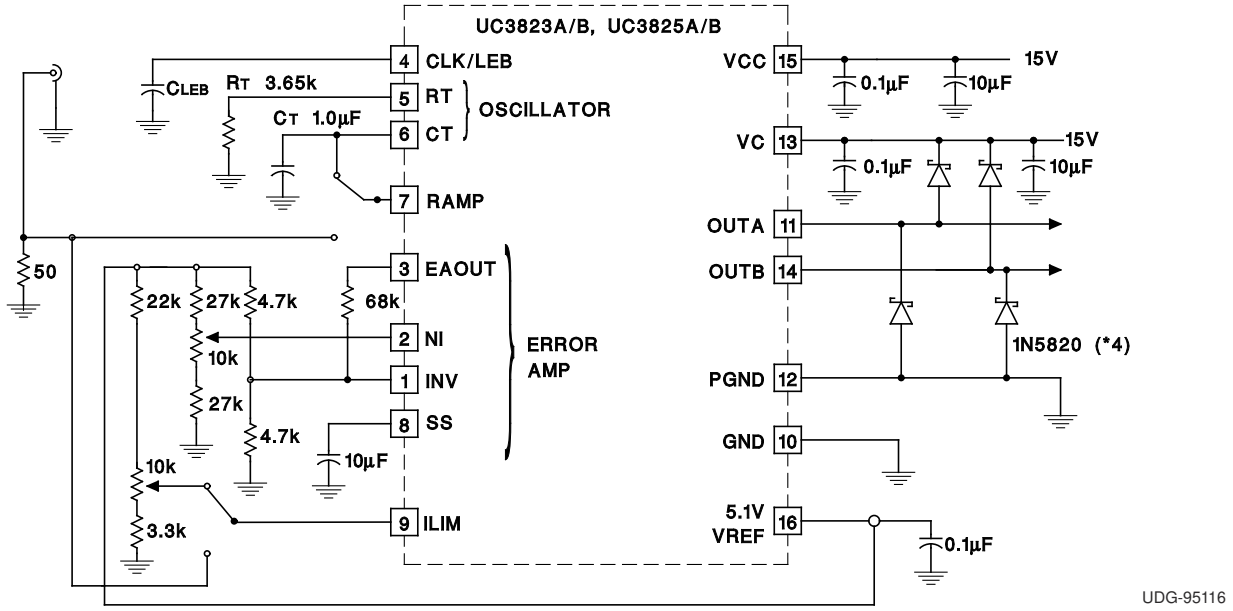

図 7-11. Open Loop Test Circuit Schematic

8 Device and Documentation Support

8.1 Documentation Support

8.2 Receiving Notification of Documentation Updates

To receive notification of documentation updates, navigate to the device product folder on ti.com. Click on *Subscribe to updates* to register and receive a weekly digest of any product information that has changed. For change details, review the revision history included in any revised document.

8.3 サポート・リソース

TI E2E™ サポート・フォーラムは、エンジニアが検証済みの回答と設計に関するヒントをエキスパートから迅速かつ直接得ることができる場所です。既存の回答を検索したり、独自の質問をしたりすることで、設計で必要な支援を迅速に得ることができます。

リンクされているコンテンツは、該当する貢献者により、現状のまま提供されるものです。これらは TI の仕様を構成するものではなく、必ずしも TI の見解を反映したものではありません。TI の使用条件を参照してください。

8.4 Trademarks

TI E2E™ is a trademark of Texas Instruments.
すべての商標は、それぞれの所有者に帰属します。

8.5 Electrostatic Discharge Caution

This integrated circuit can be damaged by ESD. Texas Instruments recommends that all integrated circuits be handled with appropriate precautions. Failure to observe proper handling and installation procedures can cause damage.

ESD damage can range from subtle performance degradation to complete device failure. Precision integrated circuits may be more susceptible to damage because very small parametric changes could cause the device not to meet its published specifications.

8.6 Glossary

TI Glossary	This glossary lists and explains terms, acronyms, and definitions.

Copyright © 2022 Texas Instruments Incorporated

9 Mechanical, Packaging, and Orderable Information

The following pages include mechanical, packaging, and orderable information. This information is the most current data available for the designated devices. This data is subject to change without notice and revision of this document. For browser-based versions of this data sheet, refer to the left-hand navigation.

PACKAGING INFORMATION

Orderable part number	Status (1)	Material type (2)	Package | Pins	Package qty | Carrier	RoHS (3)	Lead finish/ Ball material (4)	MSL rating/ Peak reflow (5)	Op temp (°C)	Part marking (6)
5962-87681022A	NRND	Production	LCCC (FK) | 20	55 | TUBE	No	SNPB	N/A for Pkg Type	-55 to 125	5962-87681022A UC1825AL/883B
5962-8768102EA	NRND	Production	CDIP (J) | 16	25 | TUBE	No	SNPB	N/A for Pkg Type	-55 to 125	5962-8768102EA UC1825AJ/883B
5962-89905022A	NRND	Production	LCCC (FK) | 20	55 | TUBE	No	SNPB	N/A for Pkg Type	-55 to 125	5962-89905022A UC1823AL/883B
5962-8990502EA	NRND	Production	CDIP (J) | 16	25 | TUBE	No	SNPB	N/A for Pkg Type	-55 to 125	5962-8990502EA UC1823AJ/883B
5962-8990502VEA	Active	Production	CDIP (J) | 16	25 | TUBE	No	SNPB	N/A for Pkg Type	-55 to 125	5962-8990502VEA UC1823AJQMLV
5962-8990502VEA.A	Active	Production	CDIP (J) | 16	25 | TUBE	No	SNPB	N/A for Pkg Type	-55 to 125	5962-8990502VEA UC1823AJQMLV
UC1823AJ	NRND	Production	CDIP (J) | 16	25 | TUBE	No	SNPB	N/A for Pkg Type	-55 to 125	UC1823AJ
UC1823AJ.A	NRND	Production	CDIP (J) | 16	25 | TUBE	No	SNPB	N/A for Pkg Type	-55 to 125	UC1823AJ
UC1823AJ883B	NRND	Production	CDIP (J) | 16	25 | TUBE	No	SNPB	N/A for Pkg Type	-55 to 125	5962-8990502EA UC1823AJ/883B
UC1823AJ883B.A	NRND	Production	CDIP (J) | 16	25 | TUBE	No	SNPB	N/A for Pkg Type	-55 to 125	5962-8990502EA UC1823AJ/883B
UC1823AL	NRND	Production	LCCC (FK) | 20	55 | TUBE	No	SNPB	N/A for Pkg Type	-55 to 125	UC1823AL
UC1823AL.A	NRND	Production	LCCC (FK) | 20	55 | TUBE	No	SNPB	N/A for Pkg Type	-55 to 125	UC1823AL
UC1823AL883B	NRND	Production	LCCC (FK) | 20	55 | TUBE	No	SNPB	N/A for Pkg Type	-55 to 125	5962-89905022A UC1823AL/883B
UC1823AL883B.A	NRND	Production	LCCC (FK) | 20	55 | TUBE	No	SNPB	N/A for Pkg Type	-55 to 125	5962-89905022A UC1823AL/883B

Orderable part number	Status (1)	Material type (2)	Package | Pins	Package qty | Carrier	RoHS (3)	Lead finish/ Ball material (4)	MSL rating/ Peak reflow (5)	Op temp (°C)	Part marking (6)
UC1825AJ	NRND	Production	CDIP (J) | 16	25 | TUBE	No	SNPB	N/A for Pkg Type	-55 to 125	UC1825AJ
UC1825AJ.A	NRND	Production	CDIP (J) | 16	25 | TUBE	No	SNPB	N/A for Pkg Type	-55 to 125	UC1825AJ
UC1825AJ883B	NRND	Production	CDIP (J) | 16	25 | TUBE	No	SNPB	N/A for Pkg Type	-55 to 125	5962-8768102EA UC1825AJ/883B
UC1825AJ883B.A	NRND	Production	CDIP (J) | 16	25 | TUBE	No	SNPB	N/A for Pkg Type	-55 to 125	5962-8768102EA UC1825AJ/883B
UC1825AL	NRND	Production	LCCC (FK) | 20	55 | TUBE	No	SNPB	N/A for Pkg Type	-55 to 125	UC1825AL
UC1825AL.A	NRND	Production	LCCC (FK) | 20	55 | TUBE	No	SNPB	N/A for Pkg Type	-55 to 125	UC1825AL
UC1825AL883B	NRND	Production	LCCC (FK) | 20	55 | TUBE	No	SNPB	N/A for Pkg Type	-55 to 125	5962-87681022A UC1825AL/883B
UC1825AL883B.A	NRND	Production	LCCC (FK) | 20	55 | TUBE	No	SNPB	N/A for Pkg Type	-55 to 125	5962-87681022A UC1825AL/883B
UC2823ADW	NRND	Production	SOIC (DW) | 16	40 | TUBE	Yes	NIPDAU	Level-2-260C-1 YEAR	-40 to 85	UC2823ADW
UC2823ADW.A	NRND	Production	SOIC (DW) | 16	40 | TUBE	Yes	NIPDAU	Level-2-260C-1 YEAR	-40 to 85	UC2823ADW
UC2823ADWTR	NRND	Production	SOIC (DW) | 16	2000 | LARGE T&R	Yes	NIPDAU	Level-2-260C-1 YEAR	-40 to 85	UC2823ADW
UC2823ADWTR.A	NRND	Production	SOIC (DW) | 16	2000 | LARGE T&R	Yes	NIPDAU	Level-2-260C-1 YEAR	-40 to 85	UC2823ADW
UC2823AN	Active	Production	PDIP (N) | 16	25 | TUBE	Yes	NIPDAU	N/A for Pkg Type	-40 to 85	UC2823AN
UC2823AN.A	Active	Production	PDIP (N) | 16	25 | TUBE	Yes	NIPDAU	N/A for Pkg Type	-40 to 85	UC2823AN
UC2823BDW	Active	Production	SOIC (DW) | 16	40 | TUBE	Yes	NIPDAU	Level-2-260C-1 YEAR	-40 to 85	UC2823BDW
UC2823BDW.A	Active	Production	SOIC (DW) | 16	40 | TUBE	Yes	NIPDAU	Level-2-260C-1 YEAR	-40 to 85	UC2823BDW
UC2825ADW	NRND	Production	SOIC (DW) | 16	40 | TUBE	Yes	NIPDAU	Level-2-260C-1 YEAR	-40 to 85	UC2825ADW
UC2825ADW.A	NRND	Production	SOIC (DW) | 16	40 | TUBE	Yes	NIPDAU	Level-2-260C-1 YEAR	-40 to 85	UC2825ADW
UC2825ADWG4	NRND	Production	SOIC (DW) | 16	40 | TUBE	Yes	NIPDAU	Level-2-260C-1 YEAR	-40 to 85	UC2825ADW
UC2825ADWTR	NRND	Production	SOIC (DW) | 16	2000 | LARGE T&R	Yes	NIPDAU	Level-2-260C-1 YEAR	-40 to 85	UC2825ADW
UC2825ADWTR.A	NRND	Production	SOIC (DW) | 16	2000 | LARGE T&R	Yes	NIPDAU	Level-2-260C-1 YEAR	-40 to 85	UC2825ADW
UC2825ADWTRG4	NRND	Production	SOIC (DW) | 16	2000 | LARGE T&R	Yes	NIPDAU	Level-2-260C-1 YEAR	-40 to 85	UC2825ADW
UC2825AN	NRND	Production	PDIP (N) | 16	25 | TUBE	Yes	NIPDAU	N/A for Pkg Type	-40 to 85	UC2825AN
UC2825AN.A	NRND	Production	PDIP (N) | 16	25 | TUBE	Yes	NIPDAU	N/A for Pkg Type	-40 to 85	UC2825AN
UC2825ANG4	NRND	Production	PDIP (N) | 16	25 | TUBE	Yes	NIPDAU	N/A for Pkg Type	-40 to 85	UC2825AN

Orderable part number	Status (1)	Material type (2)	Package | Pins	Package qty | Carrier	RoHS (3)	Lead finish/ Ball material (4)	MSL rating/ Peak reflow (5)	Op temp (°C)	Part marking (6)
UC2825BDW	NRND	Production	SOIC (DW) | 16	40 | TUBE	Yes	NIPDAU	Level-2-260C-1 YEAR	-40 to 85	UC2825BDW
UC2825BDW.A	NRND	Production	SOIC (DW) | 16	40 | TUBE	Yes	NIPDAU	Level-2-260C-1 YEAR	-40 to 85	UC2825BDW
UC2825BDWG4	NRND	Production	SOIC (DW) | 16	40 | TUBE	Yes	NIPDAU	Level-2-260C-1 YEAR	-40 to 85	UC2825BDW
UC2825BN	NRND	Production	PDIP (N) | 16	25 | TUBE	Yes	NIPDAU	N/A for Pkg Type	-40 to 85	UC2825BN
UC2825BN.A	NRND	Production	PDIP (N) | 16	25 | TUBE	Yes	NIPDAU	N/A for Pkg Type	-40 to 85	UC2825BN
UC3823ADW	Active	Production	SOIC (DW) | 16	40 | TUBE	Yes	NIPDAU	Level-2-260C-1 YEAR	0 to 70	UC3823ADW
UC3823ADW.A	Active	Production	SOIC (DW) | 16	40 | TUBE	Yes	NIPDAU	Level-2-260C-1 YEAR	0 to 70	UC3823ADW
UC3823ADWTR	Active	Production	SOIC (DW) | 16	2000 | LARGE T&R	Yes	NIPDAU	Level-2-260C-1 YEAR	0 to 70	UC3823ADW
UC3823ADWTR.A	Active	Production	SOIC (DW) | 16	2000 | LARGE T&R	Yes	NIPDAU	Level-2-260C-1 YEAR	0 to 70	UC3823ADW
UC3823AN	Active	Production	PDIP (N) | 16	25 | TUBE	Yes	NIPDAU	N/A for Pkg Type	0 to 70	UC3823AN
UC3823AN.A	Active	Production	PDIP (N) | 16	25 | TUBE	Yes	NIPDAU	N/A for Pkg Type	0 to 70	UC3823AN
UC3823BDW	Active	Production	SOIC (DW) | 16	40 | TUBE	Yes	NIPDAU	Level-2-260C-1 YEAR	0 to 70	UC3823BDW
UC3823BDW.A	Active	Production	SOIC (DW) | 16	40 | TUBE	Yes	NIPDAU	Level-2-260C-1 YEAR	0 to 70	UC3823BDW
UC3823BDWTR	Active	Production	SOIC (DW) | 16	2000 | LARGE T&R	Yes	NIPDAU	Level-2-260C-1 YEAR	0 to 70	UC3823BDW
UC3823BDWTR.A	Active	Production	SOIC (DW) | 16	2000 | LARGE T&R	Yes	NIPDAU	Level-2-260C-1 YEAR	0 to 70	UC3823BDW
UC3825ADW	NRND	Production	SOIC (DW) | 16	40 | TUBE	Yes	NIPDAU	Level-2-260C-1 YEAR	0 to 70	UC3825ADW
UC3825ADW.A	NRND	Production	SOIC (DW) | 16	40 | TUBE	Yes	NIPDAU	Level-2-260C-1 YEAR	0 to 70	UC3825ADW
UC3825ADWG4	NRND	Production	SOIC (DW) | 16	40 | TUBE	Yes	NIPDAU	Level-2-260C-1 YEAR	0 to 70	UC3825ADW
UC3825ADWTR	NRND	Production	SOIC (DW) | 16	2000 | LARGE T&R	Yes	NIPDAU	Level-2-260C-1 YEAR	0 to 70	UC3825ADW
UC3825ADWTR.A	NRND	Production	SOIC (DW) | 16	2000 | LARGE T&R	Yes	NIPDAU	Level-2-260C-1 YEAR	0 to 70	UC3825ADW
UC3825ADWTRG4	NRND	Production	SOIC (DW) | 16	2000 | LARGE T&R	Yes	NIPDAU	Level-2-260C-1 YEAR	0 to 70	UC3825ADW
UC3825AN	NRND	Production	PDIP (N) | 16	25 | TUBE	Yes	NIPDAU	N/A for Pkg Type	0 to 70	UC3825AN
UC3825AN.A	NRND	Production	PDIP (N) | 16	25 | TUBE	Yes	NIPDAU	N/A for Pkg Type	0 to 70	UC3825AN
UC3825ANG4	NRND	Production	PDIP (N) | 16	25 | TUBE	Yes	NIPDAU	N/A for Pkg Type	0 to 70	UC3825AN
UC3825BDW	Active	Production	SOIC (DW) | 16	40 | TUBE	Yes	NIPDAU	Level-2-260C-1 YEAR	0 to 70	UC3825BDW
UC3825BDW.A	Active	Production	SOIC (DW) | 16	40 | TUBE	Yes	NIPDAU	Level-2-260C-1 YEAR	0 to 70	UC3825BDW
UC3825BDWTR	Obsolete	Production	SOIC (DW) | 16	-	-	Call TI	Call TI	0 to 70	UC3825BDW
UC3825BN	NRND	Production	PDIP (N) | 16	25 | TUBE	Yes	NIPDAU	N/A for Pkg Type	0 to 70	UC3825BN
UC3825BN.A	NRND	Production	PDIP (N) | 16	25 | TUBE	Yes	NIPDAU	N/A for Pkg Type	0 to 70	UC3825BN

(1) **Status:** For more details on status, see our product life cycle.

(2) **Material type:** When designated, preproduction parts are prototypes/experimental devices, and are not yet approved or released for full production. Testing and final process, including without limitation quality assurance, reliability performance testing, and/or process qualification, may not yet be complete, and this item is subject to further changes or possible discontinuation. If available for ordering, purchases will be subject to an additional waiver at checkout, and are intended for early internal evaluation purposes only. These items are sold without warranties of any kind.

(3) **RoHS values:** Yes, No, RoHS Exempt. See the TI RoHS Statement for additional information and value definition.

(4) **Lead finish/Ball material:** Parts may have multiple material finish options. Finish options are separated by a vertical ruled line. Lead finish/Ball material values may wrap to two lines if the finish value exceeds the maximum column width.

(5) **MSL rating/Peak reflow:** The moisture sensitivity level ratings and peak solder (reflow) temperatures. In the event that a part has multiple moisture sensitivity ratings, only the lowest level per JEDEC standards is shown. Refer to the shipping label for the actual reflow temperature that will be used to mount the part to the printed circuit board.

(6) **Part marking:** There may be an additional marking, which relates to the logo, the lot trace code information, or the environmental category of the part.

Multiple part markings will be inside parentheses. Only one part marking contained in parentheses and separated by a "~" will appear on a part. If a line is indented then it is a continuation of the previous line and the two combined represent the entire part marking for that device.

Important Information and Disclaimer: The information provided on this page represents TI's knowledge and belief as of the date that it is provided. TI bases its knowledge and belief on information provided by third parties, and makes no representation or warranty as to the accuracy of such information. Efforts are underway to better integrate information from third parties. TI has taken and continues to take reasonable steps to provide representative and accurate information but may not have conducted destructive testing or chemical analysis on incoming materials and chemicals. TI and TI suppliers consider certain information to be proprietary, and thus CAS numbers and other limited information may not be available for release.

In no event shall TI's liability arising out of such information exceed the total purchase price of the TI part(s) at issue in this document sold by TI to Customer on an annual basis.

OTHER QUALIFIED VERSIONS OF UC1823A, UC1823A-SP, UC1825A, UC2825A, UC3823A, UC3825A :

- Catalog : UC3823A, UC1823A, UC3825A
- Automotive : UC2825A-Q1
- Enhanced Product : UC2825A-EP
- Military : UC1823A, UC1825A
- Space : UC1823A-SP, UC1825A-SP

NOTE: Qualified Version Definitions:

- Catalog - TI's standard catalog product
- Automotive - Q100 devices qualified for high-reliability automotive applications targeting zero defects
- Enhanced Product - Supports Defense, Aerospace and Medical Applications
- Military - QML certified for Military and Defense Applications
- Space - Radiation tolerant, ceramic packaging and qualified for use in Space-based application

TAPE AND REEL INFORMATION

REEL DIMENSIONS

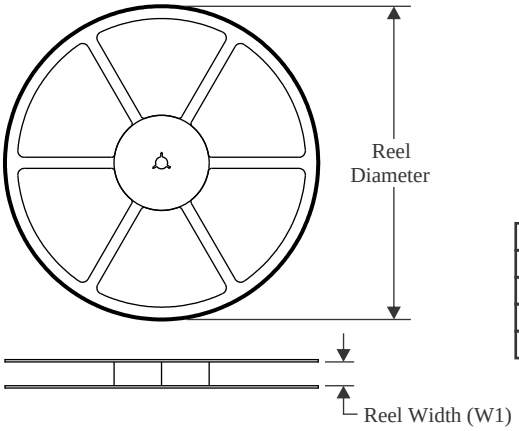

TAPE DIMENSIONS

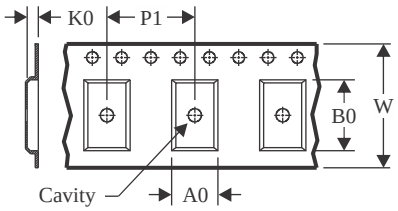

A0	Dimension designed to accommodate the component width
B0	Dimension designed to accommodate the component length
K0	Dimension designed to accommodate the component thickness
W	Overall width of the carrier tape
P1	Pitch between successive cavity centers

QUADRANT ASSIGNMENTS FOR PIN 1 ORIENTATION IN TAPE

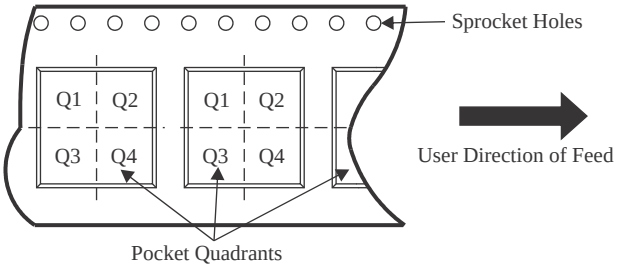

*All dimensions are nominal

Device	Package Type	Package Drawing	Pins	SPQ	Reel Diameter (mm)	Reel Width W1 (mm)	A0 (mm)	B0 (mm)	K0 (mm)	P1 (mm)	W (mm)	Pin1 Quadrant
UC2823ADWTR	SOIC	DW	16	2000	330.0	16.4	10.75	10.7	2.7	12.0	16.0	Q1
UC2825ADWTR	SOIC	DW	16	2000	330.0	16.4	10.75	10.7	2.7	12.0	16.0	Q1
UC3823ADWTR	SOIC	DW	16	2000	330.0	16.4	10.75	10.7	2.7	12.0	16.0	Q1
UC3823BDWTR	SOIC	DW	16	2000	330.0	16.4	10.75	10.7	2.7	12.0	16.0	Q1
UC3825ADWTR	SOIC	DW	16	2000	330.0	16.4	10.75	10.7	2.7	12.0	16.0	Q1

TAPE AND REEL BOX DIMENSIONS

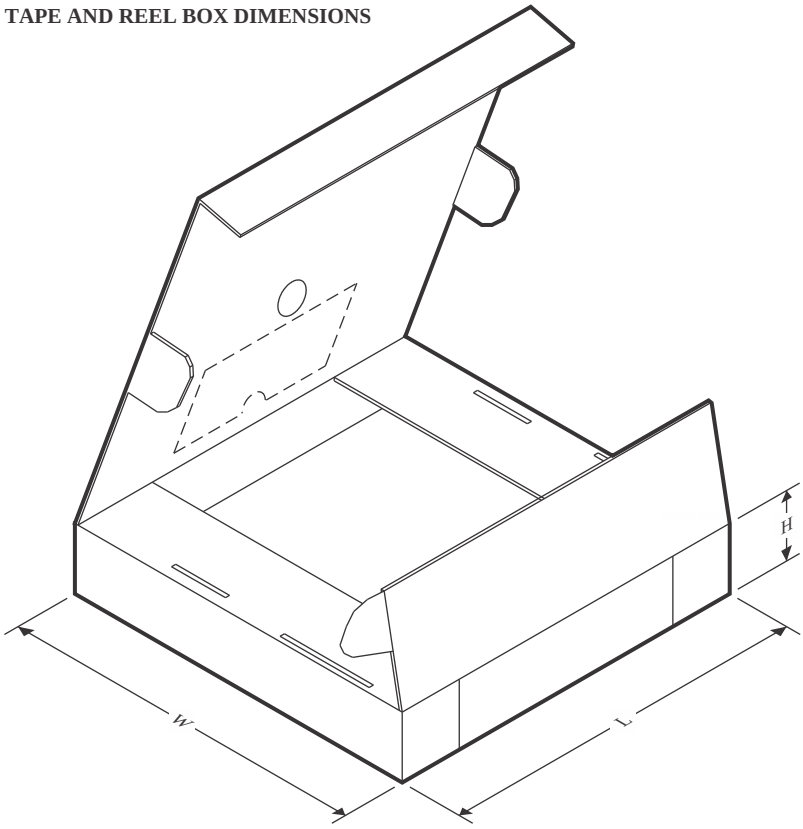

*All dimensions are nominal

Device	Package Type	Package Drawing	Pins	SPQ	Length (mm)	Width (mm)	Height (mm)
UC2823ADWTR	SOIC	DW	16	2000	353.0	353.0	32.0
UC2825ADWTR	SOIC	DW	16	2000	353.0	353.0	32.0
UC3823ADWTR	SOIC	DW	16	2000	353.0	353.0	32.0
UC3823BDWTR	SOIC	DW	16	2000	353.0	353.0	32.0
UC3825ADWTR	SOIC	DW	16	2000	353.0	353.0	32.0

TUBE

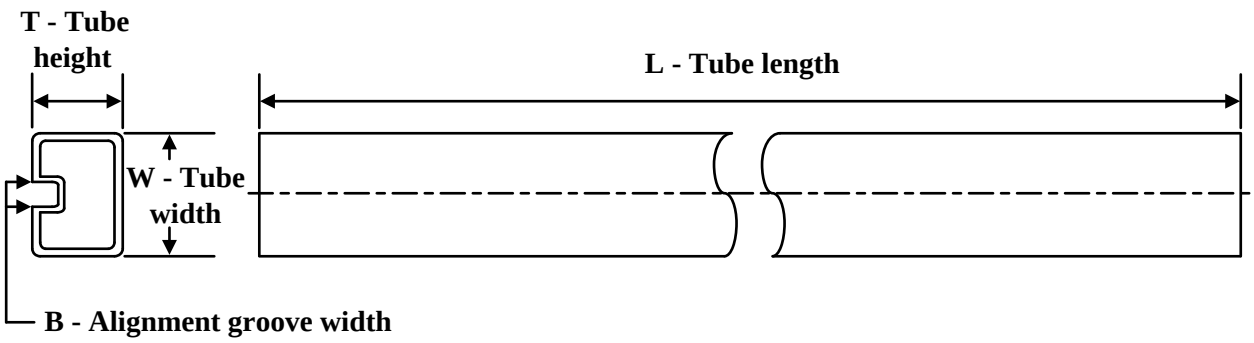

*All dimensions are nominal

Device	Package Name	Package Type	Pins	SPQ	L (mm)	W (mm)	T (µm)	B (mm)
5962-87681022A	FK	LCCC	20	55	506.98	12.06	2030	NA
5962-89905022A	FK	LCCC	20	55	506.98	12.06	2030	NA
UC1823AL	FK	LCCC	20	55	506.98	12.06	2030	NA
UC1823AL.A	FK	LCCC	20	55	506.98	12.06	2030	NA
UC1823AL883B	FK	LCCC	20	55	506.98	12.06	2030	NA
UC1823AL883B.A	FK	LCCC	20	55	506.98	12.06	2030	NA
UC1825AJ	J	CDIP	16	25	506.98	15.24	13440	NA
UC1825AJ.A	J	CDIP	16	25	506.98	15.24	13440	NA
UC1825AL	FK	LCCC	20	55	506.98	12.06	2030	NA
UC1825AL.A	FK	LCCC	20	55	506.98	12.06	2030	NA
UC1825AL883B	FK	LCCC	20	55	506.98	12.06	2030	NA
UC1825AL883B.A	FK	LCCC	20	55	506.98	12.06	2030	NA
UC2823ADW	DW	SOIC	16	40	507	12.83	5080	6.6
UC2823ADW.A	DW	SOIC	16	40	507	12.83	5080	6.6
UC2823AN	N	PDIP	16	25	506	13.97	11230	4.32
UC2823AN.A	N	PDIP	16	25	506	13.97	11230	4.32
UC2823BDW	DW	SOIC	16	40	507	12.83	5080	6.6
UC2823BDW.A	DW	SOIC	16	40	507	12.83	5080	6.6
UC2825ADW	DW	SOIC	16	40	507	12.83	5080	6.6
UC2825ADW.A	DW	SOIC	16	40	507	12.83	5080	6.6
UC2825ADWG4	DW	SOIC	16	40	507	12.83	5080	6.6
UC2825AN	N	PDIP	16	25	506	13.97	11230	4.32
UC2825AN.A	N	PDIP	16	25	506	13.97	11230	4.32
UC2825ANG4	N	PDIP	16	25	506	13.97	11230	4.32
UC2825BDW	DW	SOIC	16	40	507	12.83	5080	6.6
UC2825BDW.A	DW	SOIC	16	40	507	12.83	5080	6.6
UC2825BDWG4	DW	SOIC	16	40	507	12.83	5080	6.6
UC2825BN	N	PDIP	16	25	506	13.97	11230	4.32
UC2825BN.A	N	PDIP	16	25	506	13.97	11230	4.32

Device	Package Name	Package Type	Pins	SPQ	L (mm)	W (mm)	T (µm)	B (mm)
UC3823ADW	DW	SOIC	16	40	507	12.83	5080	6.6
UC3823ADW.A	DW	SOIC	16	40	507	12.83	5080	6.6
UC3823AN	N	PDIP	16	25	506	13.97	11230	4.32
UC3823AN.A	N	PDIP	16	25	506	13.97	11230	4.32
UC3823BDW	DW	SOIC	16	40	507	12.83	5080	6.6
UC3823BDW.A	DW	SOIC	16	40	507	12.83	5080	6.6
UC3825ADW	DW	SOIC	16	40	507	12.83	5080	6.6
UC3825ADW.A	DW	SOIC	16	40	507	12.83	5080	6.6
UC3825ADWG4	DW	SOIC	16	40	507	12.83	5080	6.6
UC3825AN	N	PDIP	16	25	506	13.97	11230	4.32
UC3825AN.A	N	PDIP	16	25	506	13.97	11230	4.32
UC3825ANG4	N	PDIP	16	25	506	13.97	11230	4.32
UC3825BDW	DW	SOIC	16	40	507	12.83	5080	6.6
UC3825BDW.A	DW	SOIC	16	40	507	12.83	5080	6.6
UC3825BN	N	PDIP	16	25	506	13.97	11230	4.32
UC3825BN.A	N	PDIP	16	25	506	13.97	11230	4.32

重要なお知らせと免責事項

TI は、技術データと信頼性データ (データシートを含みます)、設計リソース (リファレンス デザインを含みます)、アプリケーションや設計に関する各種アドバイス、Web ツール、安全性情報、その他のリソースを、欠陥が存在する可能性のある「現状のまま」提供しており、商品性および特定目的に対する適合性の黙示保証、第三者の知的財産権の非侵害保証を含むいかなる保証も、明示的または黙示的にかかわらず拒否します。

これらのリソースは、TI 製品を使用する設計の経験を積んだ開発者への提供を意図したものです。(1) お客様のアプリケーションに適した TI 製品の選定、(2) お客様のアプリケーションの設計、検証、試験、(3) お客様のアプリケーションに該当する各種規格や、その他のあらゆる安全性、セキュリティ、規制、または他の要件への確実な適合に関する責任を、お客様のみが単独で負うものとします。

上記の各種リソースは、予告なく変更される可能性があります。これらのリソースは、リソースで説明されている TI 製品を使用するアプリケーションの開発の目的でのみ、TI はその使用をお客様に許諾します。これらのリソースに関して、他の目的で複製することや掲載することは禁止されています。TI や第三者の知的財産権のライセンスが付与されている訳ではありません。お客様は、これらのリソースを自身で使用した結果発生するあらゆる申し立て、損害、費用、損失、責任について、TI およびその代理人を完全に補償するものとし、TI は一切の責任を拒否します。

TI の製品は、 TI の販売条件 、 TI の総合的な品質ガイドライン 、 ti.com または TI 製品などに関連して提供される他の適用条件に従い提供されます。TI がこれらのリソースを提供することは、適用される TI の保証または他の保証の放棄の拡大や変更を意味するものではありません。 TI がカスタム、またはカスタマー仕様として明示的に指定していない限り、TI の製品は標準的なカタログに掲載される汎用機器です。

お客様がいかなる追加条項または代替条項を提案する場合も、TI はそれらに異議を唱え、拒否します。

Copyright © 2026, Texas Instruments Incorporated

最終更新日：2025 年 10 月