TEXAS INSTRUMENTS
UCC27423-Q1, UCC27424-Q1, UCC27425-Q1
JAJSS81I – SEPTEMBER 2008 – REVISED NOVEMBER 2023

UCC2742x-Q1、デュアル、4A、高速ローサイド MOSFET ドライバ、イネーブル付き

1 特長

- 車載アプリケーション用に認定済み
- 下記内容で AEC-Q100 認定済み:
  - デバイス温度グレード 1:-40℃～+125℃の周囲動作温度範囲
  - デバイス HBM ESD 分類レベル 2
  - デバイス CDM ESD 分類レベル C6
- 業界標準のピン配置
- ドライバ毎のイネーブル機能
- 高い電流駆動能力:±4A
- 独自のバイポーラおよび CMOS True Drive 出力段により、MOSFET のミラー スレッショルドで高電流を供給
- TTL および CMOS 互換の電源電圧から独立した入力
- 標準立ち上がり時間 20ns、標準立ち下がり時間 15ns (1.8nF 負荷時)
- 標準伝播遅延時間:25ns (入力立ち下がり時)、35ns (入力立ち上がり時)
- 電源電圧:4V～15V
- 2 つの出力を並列に使用することで、より高い駆動電流を実現可能
- 熱特性が強化された MSOP PowerPAD™ パッケージで供給
- -40℃～+125℃で仕様を規定

2 アプリケーション

- スイッチ・モード電源
- DC/DC コンバータ
- モーター・コントローラ
- ライン・ドライバ
- Class-D スイッチング・アンプ

3 概要

UCC2742x-Q1 ファミリのデバイスは、容量性負荷に大きなピーク電流を供給できる高速デュアル MOSFET ドライバです。デュアル反転ドライバとデュアル非反転ドライバの 2 つの標準ロジック・オプションが用意されています。標準の 8 ピン SOIC (D) パッケージで供給されます。熱特性が強化された 8 ピン PowerPAD Package MSOP パッケージ (DGN) によって熱抵抗が大幅に低減され、長期的な信頼性が向上しています。

本質的に貫通電流を最小限に抑える設計により、MOSFET のスイッチング遷移中のミラー プラトー領域で最も必要とされる 4A の電流を供給します。また、独自のバイポーラおよび MOSFET の並列ハイブリッド出力段により、低い電源電圧でも高効率の電流ソース/シンクを実現します。

UCC2742x-Q1 は、イネーブル (ENB) 機能によって、ドライバ アプリケーションの動作をよりきめ細かく制御できます。ENBA および ENBB は、業界標準ピン配置では未使用だったピン 1 および 8 に実装されています。これらのピンは、アクティブ ハイ ロジックでは内部で V_{DD} にプルアップされ、標準動作時にはオープンにできます。

製品情報

部品番号 (1)	パッケージ	本体サイズ (公称)
UCC2742x-Q1	SOIC (8)	4.90mm × 3.91mm
	MSOP PowerPAD (8) 搭載	3.00mm × 3.00mm

(1) 利用可能なすべてのパッケージについては、データシートの末尾にある注文情報を参照してください。

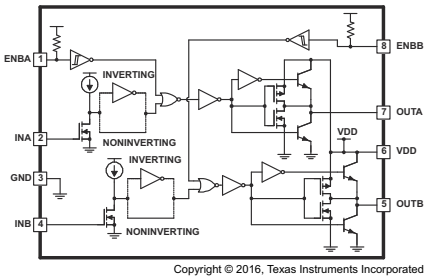

Copyright © 2016, Texas Instruments Incorporated

ブロック図

このリソースの元の言語は英語です。翻訳は概要を便宜的に提供するもので、自動化ツール (機械翻訳) を使用していることがあり、TI では翻訳の正確性および妥当性につきましては一切保証いたしません。実際の設計などの前には、ti.com で必ず最新の英語版をご参照くださいますようお願いいたします。

Table of Contents

1 特長 ... 1
2 アプリケーション ... 1
3 概要 ... 1
4 Device Comparison Table ... 3
5 Pin Configuration and Functions ... 4
6 Specifications ... 6
6.1 Absolute Maximum Ratings ... 6
6.2 ESD Ratings ... 6
6.3 Recommended Operating Conditions ... 6
6.4 Thermal Information ... 6
6.5 Electrical Characteristics ... 8
6.6 Switching Characteristics ... 9
6.7 Dissipation Ratings ... 10
6.8 Typical Characteristics ... 11
7 Detailed Description ... 16
7.1 Overview ... 16
7.2 Functional Block Diagram ... 16
7.3 Feature Description ... 16
7.4 Device Functional Modes ... 18
8 Application and Implementation ... 19
8.1 Application Information ... 19
8.2 Typical Application ... 19
9 Power Supply Recommendations ... 24
10 Layout ... 24
10.1 Layout Guidelines ... 24
10.2 Layout Example ... 25
10.3 Thermal Considerations ... 25
11 Device and Documentation Support ... 26
11.1 Device Support ... 26
11.2 Documentation Support ... 26
11.3 ドキュメントの更新通知を受け取る方法 ... 26
11.4 サポート・リソース ... 26
11.5 Trademarks ... 26
11.6 静電気放電に関する注意事項 ... 26
11.7 用語集 ... 26
12 Revision History ... 27
13 Mechanical, Packaging, and Orderable Information ... 27

Copyright © 2023 Texas Instruments Incorporated

4 Device Comparison Table

ORDERABLE PART NUMBER(1)	CONFIGURATION
UCC27423QDGNRQ1	Dual Inverting
UCC27424QDGNRQ1	Dual Noninverting
UCC27423QDRQ1	Dual Inverting
UCC27424QDRQ1	Dual Noninverting
UCC27425QDRQ1	One Inverting, One Noninverting

(1) For the most current package and ordering information, see セクション 13, or see the TI web site at www.ti.com.

Copyright © 2023 Texas Instruments Incorporated

5 Pin Configuration and Functions

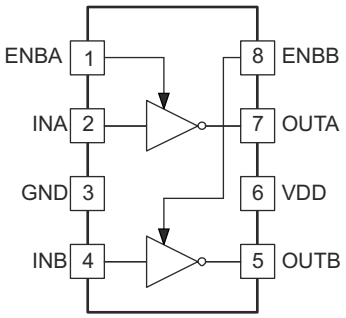

図 5-1. UCC27423-Q1: D or DGN Package 8-Pin SOIC or MSOP With PowerPAD Dual Inverting, Top View

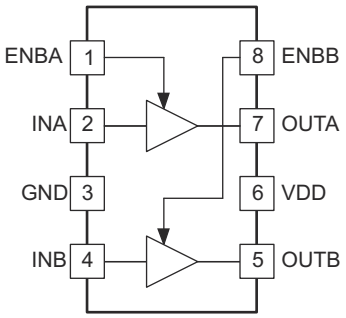

図 5-2. UCC27424-Q1: D or DGN Package 8-Pin SOIC or MSOP With PowerPAD Dual Noninverting, Top View

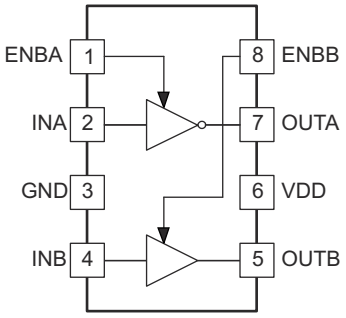

図 5-3. UCC27425-Q1: D Package 8-Pin SOIC One Inverting, One Noninverting, Top View

表 5-1. Pin Functions

PIN		I/O	DESCRIPTION
NO.	NAME		
1	ENBA	I	Enable input for the driver A with logic-compatible threshold and hysteresis. The driver output can be enabled and disabled with this pin. It is internally pulled up to V_{DD} with 100-kΩ resistor for active high operation. The output state when the device is disabled is low, regardless of the input state.
2	INA	I	Input A. Input signal of the A driver which has logic-compatible threshold and hysteresis. If not used, this input must be tied to either V_{DD} or GND. It must not be left floating.
3	GND	—	Common ground. This ground must be connected very closely to the source of the power MOSFET which the driver is driving.
4	INB	I	Input B. Input signal of the B driver which has logic-compatible threshold and hysteresis. If not used, this input must be tied to either V_{DD} or GND. It must not be left floating.
5	OUTB	O	Driver output B. The output stage is capable of providing 4-A drive current to the gate of a power MOSFET.
6	VDD	—	Supply voltage and the power input connection for this device.

Copyright © 2023 Texas Instruments Incorporated

表 5-1. Pin Functions (続き)

PIN		I/O	DESCRIPTION
NO.	NAME		
7	OUTA	O	Driver output A. The output stage is capable of providing 4-A drive current to the gate of a power MOSFET.
8	ENBB	I	Enable input for the driver B with logic-compatible threshold and hysteresis. The driver output can be enabled and disabled with this pin. It is internally pulled up to V_{DD} with 100-kΩ resistor for active-high operation. The output state when the device is disabled is low, regardless of the input state.

Copyright © 2023 Texas Instruments Incorporated

6 Specifications

6.1 Absolute Maximum Ratings

over operating free-air temperature range (unless otherwise noted)(1) (2)

			MIN	MAX	UNIT
V_{DD}	Supply voltage		–0.3	16	V
I_{OUT}	Output current	DC		0.3	A
		Pulsed, 0.5 µs		4.5	
V_{IN}	Input voltage	INA, INB	–5	6(3) or (V_{DD} + 0.3)(3)	V
V_{EN}	Enable voltage	ENBA, ENBB	–0.3	6(3) or (V_{DD} + 0.3)(3)	V
P_D	Power dissipation	T_A = 25°C (D package)		650	mW
		T_A = 25°C (DGN package)		3	W
T_J	Junction operating temperature		–55	150	°C
T_{stg}	Storage temperature		–65	150	°C

(1) Stresses beyond those listed under *Absolute Maximum Ratings* may cause permanent damage to the device. These are stress ratings only, which do not imply functional operation of the device at these or any other conditions beyond those indicated under *Recommended Operating Conditions*. Exposure to absolute-maximum-rated conditions for extended periods may affect device reliability.
(2) All voltages are with respect to GND. Currents are positive into, negative out of, the specified terminal.
(3) Whichever is larger.

6.2 ESD Ratings

			VALUE	UNIT
$V_{(ESD)}$	Electrostatic discharge	Human-body model (HBM), per AEC Q100-002(1)	±2000	V
		Charged-device model (CDM), per AEC Q100-011	±1000	

(1) AEC Q100-002 indicates that HBM stressing shall be in accordance with the ANSI/ESDA/JEDEC JS-001 specification.

6.3 Recommended Operating Conditions

over operating free-air temperature range (unless otherwise noted)

		MIN	MAX	UNIT
V_{DD}	Supply voltage	4	15	V
INA	Input voltage	–2	15	V
INB				
ENA	Enable voltage	0	15	V
ENB				
T_J	Operating junction temperature	–40	125	°C

6.4 Thermal Information

THERMAL METRIC(1)		UCC2742x-Q1		UNIT
		D (SOIC)	DGN (MSOP With PowerPAD)	
		8 PINS	8 PINS	
$R_{\theta JA}$	Junction-to-ambient thermal resistance	112.6	63	°C/W
$R_{\theta JC(top)}$	Junction-to-case (top) thermal resistance	61.5	53.8	°C/W
$R_{\theta JB}$	Junction-to-board thermal resistance	52.8	35.6	°C/W
ψ_{JT}	Junction-to-top characterization parameter	15.8	1.9	°C/W
ψ_{JB}	Junction-to-board characterization parameter	52.3	35.3	°C/W

Copyright © 2023 Texas Instruments Incorporated

6.4 Thermal Information (続き)

THERMAL METRIC(1)		UCC2742x-Q1		UNIT
		D (SOIC)	DGN (MSOP With PowerPAD)	
		8 PINS	8 PINS	
$R_{\theta JC(bot)}$	Junction-to-case (bottom) thermal resistance	—	11.9	°C/W

(1) For more information about traditional and new thermal metrics, see the *Semiconductor and IC Package Thermal Metrics* application report.

6.5 Electrical Characteristics

V_{DD} = 4.5 V to 15 V, T_A = –40°C to 125°C, T_A = T_J (unless otherwise noted)

PARAMETER		TEST CONDITIONS			MIN	TYP	MAX	UNIT
INPUT (INA, INB)								
V_{IH}	Logic 1 input threshold				1.6	2.2	2.5	V
V_{IL}	Logic 0 input threshold				0.8	1.2	1.5	V
I_{IN}	Input current	V_{IN} = 0 V to V_{DD}			–10	0	10	µA
OUTPUT (OUTA, OUTB)								
I_{OUT}	Output current	V_{DD} = 14 V(1)				4		A
R_{OH}	Output resistance high	I_{OUT} = –10 mA, (2)				1.2	2.5	Ω
R_{OL}	Output resistance low	I_{OUT} = 10 mA, (2)				0.7	1.2	Ω
ENABLE (ENBA, ENBB)								
V_{IN_H}	High-level input voltage	Low-to-high transition			1.7	2.4	2.9	V
V_{IN_L}	Low-level input voltage	High-to-low transition			1.1	1.8	2.2	V
	Hysteresis				0.15	0.55	0.9	V
R_{ENBL}	Enable impedance	V_{DD} = 14 V, ENBL = GND			75	100	145	kΩ
OVERALL								
I_{DD}	Operating current	Static, V_{DD} = 15 V, ENBA = ENBB = 15 V	UCC27423-Q1	INA = 0 V	INB = 0 V	900	1350	µA
					INB = High	750	1100	
				INA = High	INB = 0 V	750	1100	
					INB = High	600	900	
			UCC27424-Q1	INA = 0 V	INB = 0 V	300	450	
					INB = High	750	1100	
				INA = High	INB = 0 V	750	1100	
					INB = High	1200	1800	
			UCC27425-Q1	INA = 0 V	INB = 0 V	600	900	
					INB = High	1050	1600	
				INA = High	INB = 0 V	450	700	
					INB = High	900	1350	
		Disabled, V_{DD} = 15 V, ENBA = ENBB = 0 V	All	INA = 0 V	INB = 0 V	300	450	
					INB = High	450	700	
				INA = High	INB = 0 V	450	700	
					INB = High	600	900	

(1) Parameter not tested in production
(2) Output pullup resistance in this table is a DC measurement that measures resistance of PMOS structure only (not N-channel structure).

Copyright © 2023 Texas Instruments Incorporated

6.6 Switching Characteristics

over operating free-air temperature range (unless otherwise noted)

PARAMETER		TEST CONDITIONS		MIN	TYP	MAX	UNIT
SWITCHING TIME							
t_r	Rise time (OUTA, OUTB)	C_{LOAD} = 1.8 nF(1)			20	40	ns
t_f	Fall time (OUTA, OUTB)	C_{LOAD} = 1.8 nF(1)			15	40	ns
t_{D1}	Delay time, IN rising (IN to OUT)	C_{LOAD} = 1.8 nF(1)			25	50	ns
t_{D2}	Delay time, IN falling (IN to OUT)	C_{LOAD} = 1.8 nF(1)	UCC27423-Q1, UCC27424-Q1		35	60	ns
			UCC27425-Q1		35	70	
ENABLE (ENBA, ENBB)							
t_{D3}	Propagation delay time(3)	C_{LOAD} = 1.8 nF(1) (2)			30	60	ns
t_{D4}	Propagation delay time(3)	C_{LOAD} = 1.8 nF(1) (2)			100	150	ns

(1) Specified by design
(2) Not production tested
(3) See 図 6-2

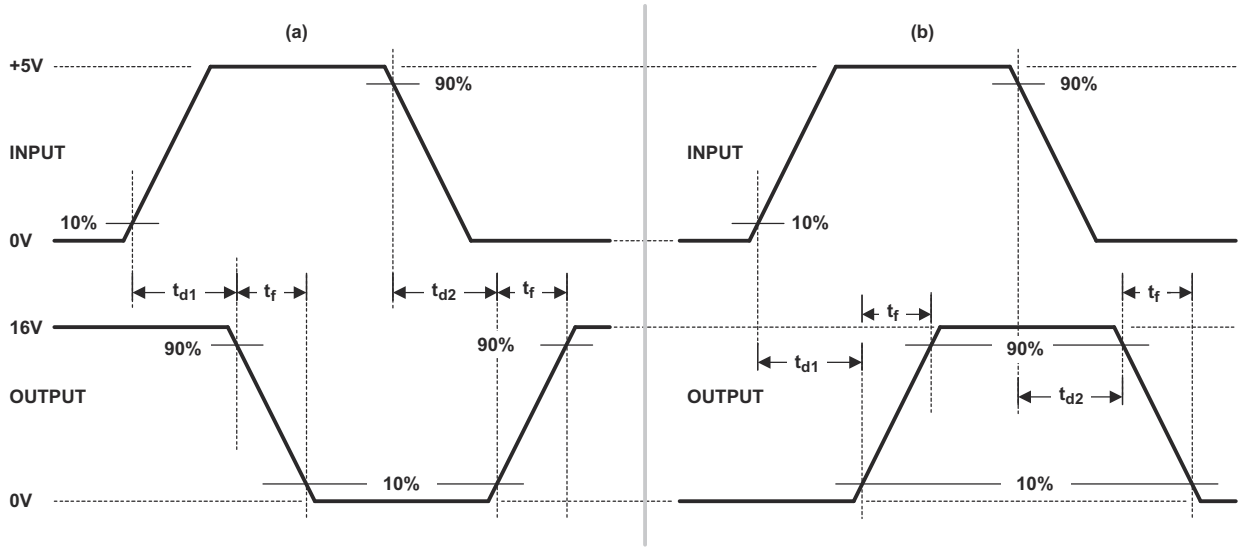

The 10% and 90% thresholds depict the dynamics of the bipolar output devices that dominate the power MOSFET transition through the Miller regions of operation.

図 6-1. Switching Waveforms for (a) Inverting Driver and (b) Noninverting Driver

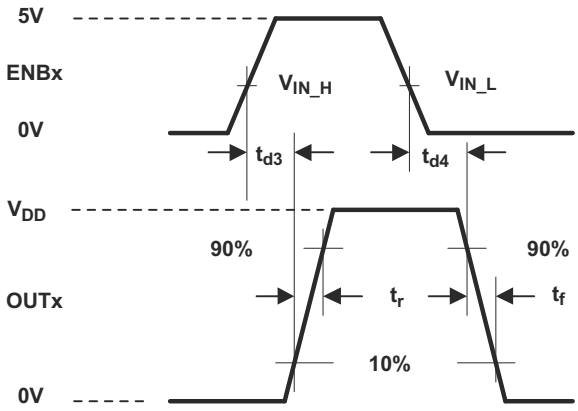

The 10% and 90% thresholds depict the dynamics of the bipolar output devices that dominate the power MOSFET transition through the Miller regions of operation.

図 6-2. Switching Waveform for Enable to Output

6.7 Dissipation Ratings

PACKAGE	θ_{JC} (°C/W)	θ_{JA} (°C/W)	POWER RATING T_A = 70°C (mW)(1)
D (SOIC-8)	42	84 to 160(2)	344 to 655(2)
DGN (MSOP PowerPAD)(3)	11.9	63	873

(1) 125°C operating junction temperature is used for power rating calculations.
(2) The range of values indicates the effect of the PCB. These values are intended to give the system designer an indication of the best- and worst-case conditions. In general, the system designer should attempt to use larger traces on the PCB, where possible, to spread the heat away form the device more effectively.
(3) The PowerPAD is not directly connected to any leads of the package. However, it is electronically and thermally connected to the substrate which is the ground of the device.

Copyright © 2023 Texas Instruments Incorporated

6.8 Typical Characteristics

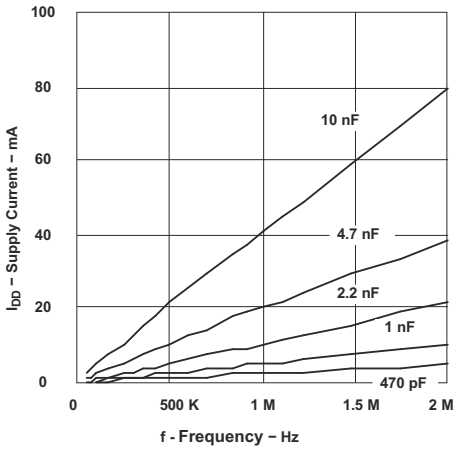

V_{DD} = 4.5 V

図 6-3. Supply Current vs Frequency

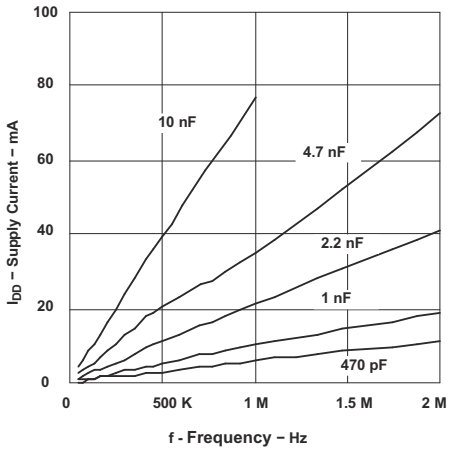

V_{DD} = 8 V

図 6-4. Supply Current vs Frequency

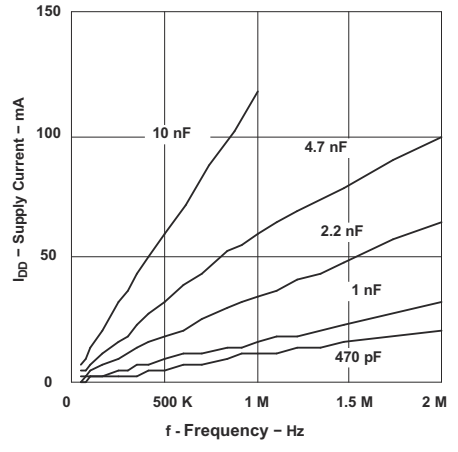

V_{DD} = 12 V

図 6-5. Supply Current vs Frequency

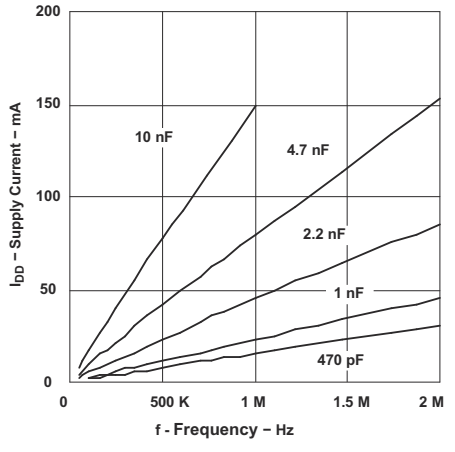

V_{DD} = 15 V

図 6-6. Supply Current vs Frequency

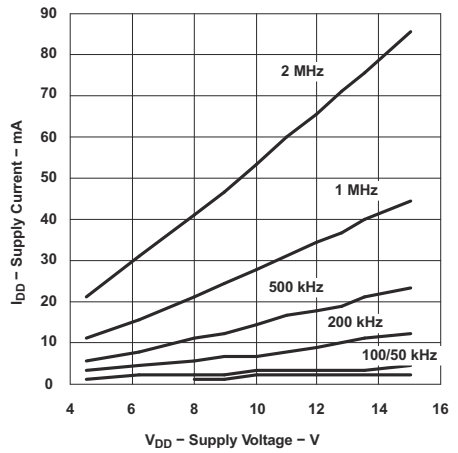

C_{LOAD} = 2.2 nF

図 6-7. Supply Current vs Supply Voltage

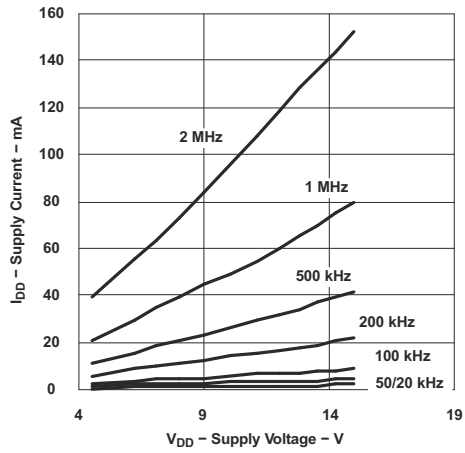

C_{LOAD} = 4.7 nF

図 6-8. Supply Current vs Supply Voltage

6.8 Typical Characteristics (continued)

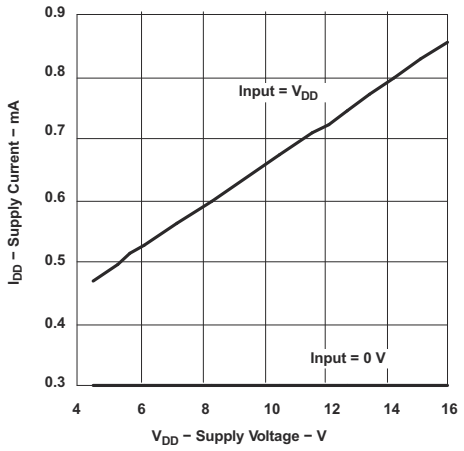

図 6-9. Supply Current vs Supply Voltage (UCC27423-Q1)

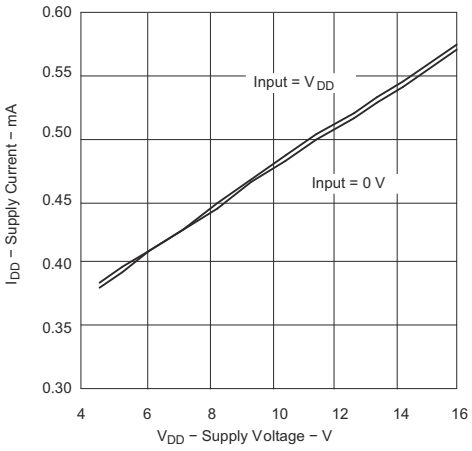

図 6-10. Supply Current vs Supply Voltage (UCC27424-Q1)

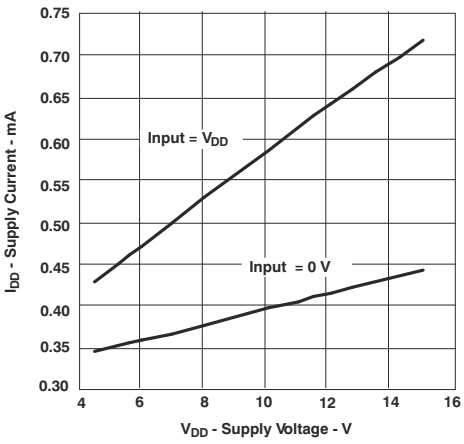

図 6-11. Supply Current vs Supply Voltage (UCC27425-Q1)

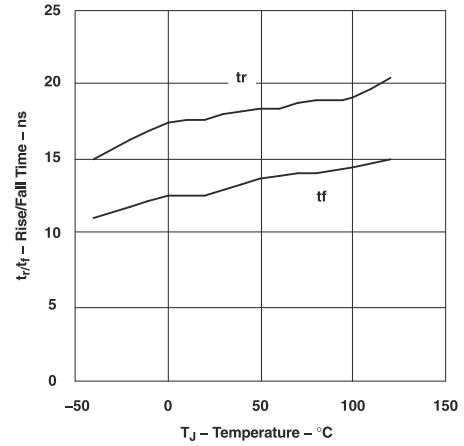

図 6-12. Rise Time and Fall Time Temperature (UCC27423-Q1)

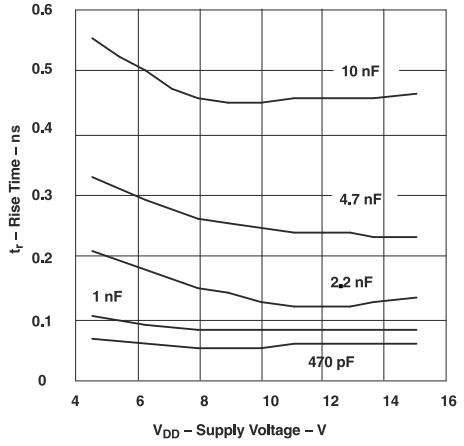

図 6-13. Rise Time vs Supply Voltage

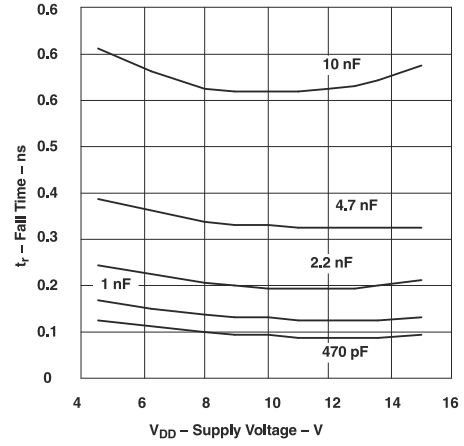

図 6-14. Fall Time vs Supply Voltage

Copyright © 2023 Texas Instruments Incorporated

6.8 Typical Characteristics (continued)

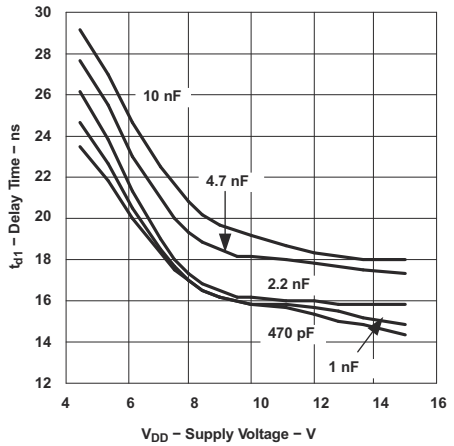

図 6-15. Delay Time (t_D1) vs Supply Voltage (UCC27423-Q1)

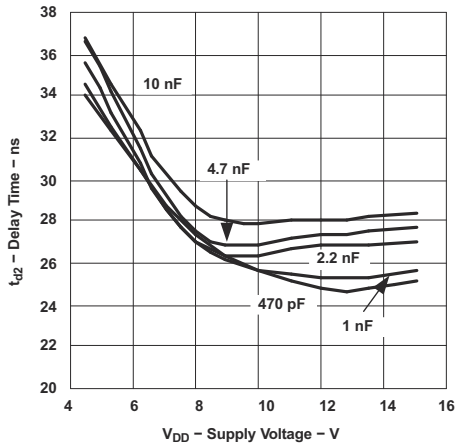

図 6-16. Delay Time (t_D2) vs Supply Voltage (UCC27423-Q1)

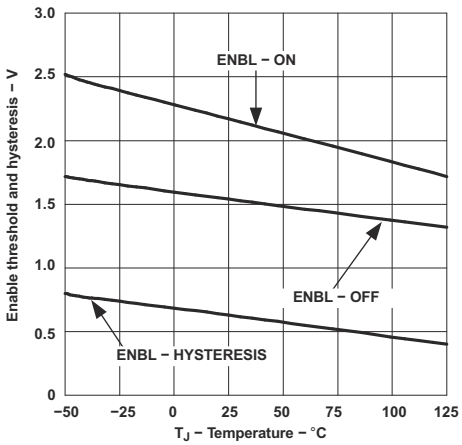

図 6-17. Enable Threshold and Hysteresis vs Temperature

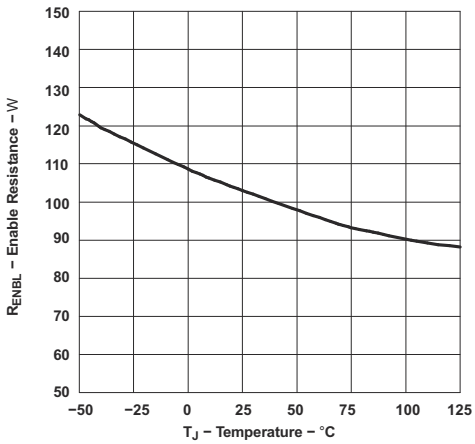

図 6-18. Enable Resistance vs Temperature

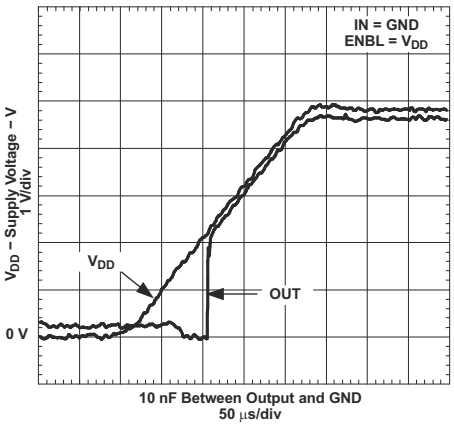

図 6-19. Output Behavior vs Supply Voltage (Inverting)

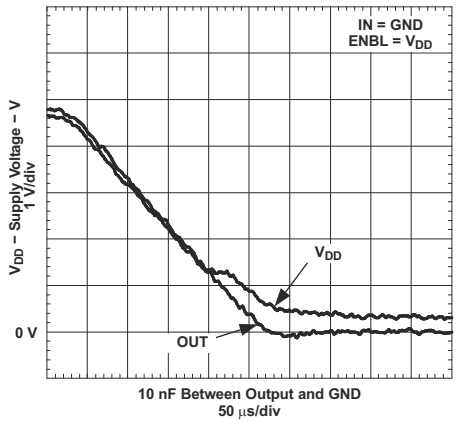

図 6-20. Output Behavior vs Supply Voltage (Inverting)

Copyright © 2023 Texas Instruments Incorporated

6.8 Typical Characteristics (continued)

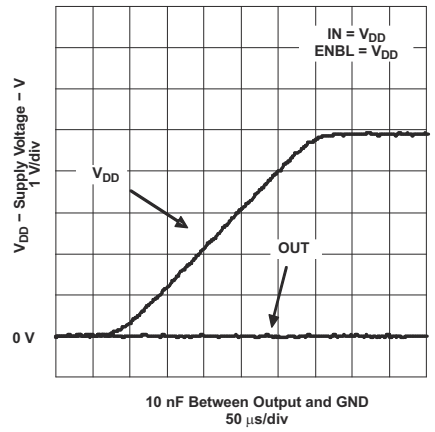

図 6-21. Output Behavior vs VDD (Inverting)

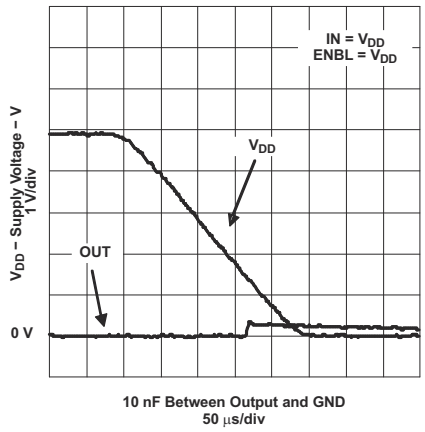

図 6-22. Output Behavior vs VDD (Inverting)

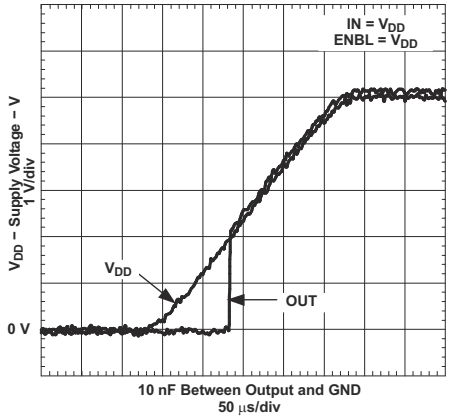

図 6-23. Output Behavior vs VDD (Noninverting)

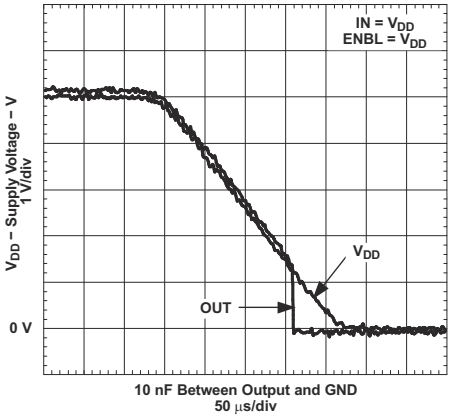

図 6-24. Output Behavior vs VDD (Noninverting)

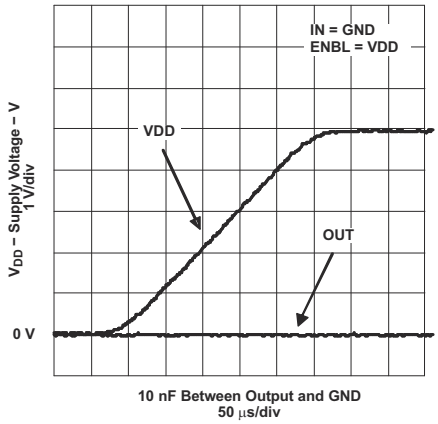

図 6-25. Output Behavior vs VDD (Noninverting)

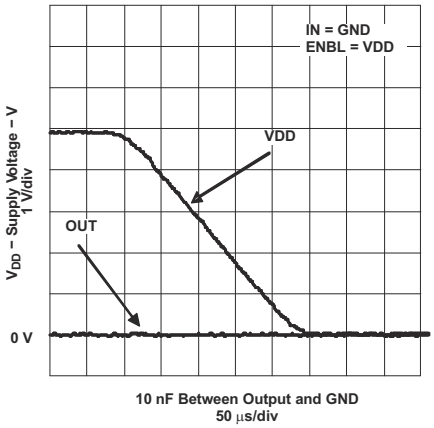

図 6-26. Output Behavior vs VDD (Noninverting)

Copyright © 2023 Texas Instruments Incorporated

6.8 Typical Characteristics (continued)

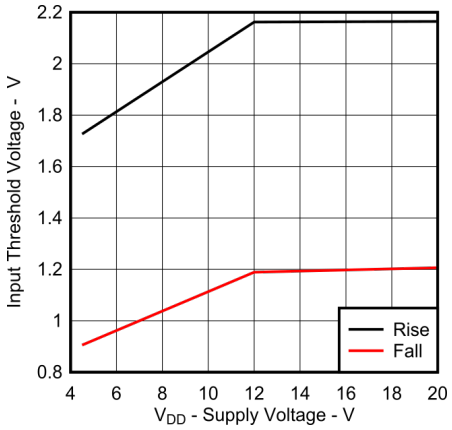

図 6-27. Input Threshold vs Supply Voltage

7 Detailed Description

7.1 Overview

The UCC2742x-Q1 family of high-speed dual MOSFET drivers can deliver large peak currents into capacitive loads. The UCC27423-Q1 offers these standard logic options: dual-inverting drivers, dual noninverting drivers, and one inverting, one noninverting driver. The thermally enhanced 8-pin PowerPAD MSOP package (DGN) drastically lowers the thermal resistance to improve long-term reliability. It is also offered in the standard 8-pin SOIC (D) package. Using a design that inherently minimizes shoot-through current, these drivers deliver 4 A of current where it is needed most at the Miller plateau region during the MOSFET switching transition. A unique Bipolar and MOSFET hybrid output stage in parallel also allows efficient current sourcing and sinking at low supply voltages.

7.2 Functional Block Diagram

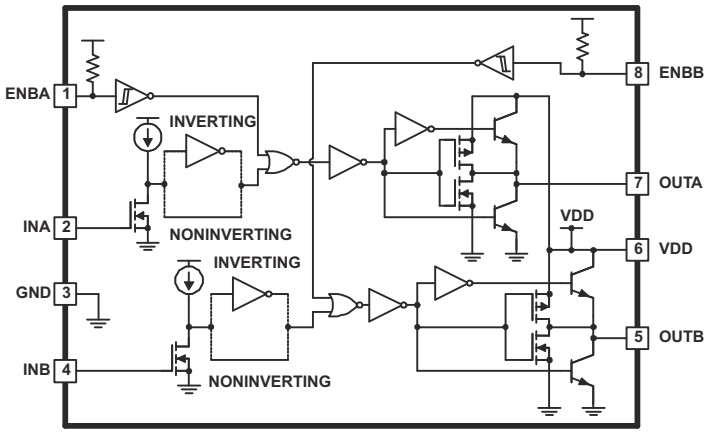

Copyright © 2016, Texas Instruments Incorporated

7.3 Feature Description

7.3.1 Input Stage

The input thresholds have a 3.3-V logic sensitivity over the full range of V_{DD} voltages; yet it is equally compatible with 0 to V_{DD} signals. The inputs of UCC2742x-Q1 drivers are designed to withstand 500-mA reverse current without either damage to the IC for logic upset. The input stage of each driver must be driven by a signal with a short rise or fall time. This condition is satisfied in typical power supply applications, where the input signals are provided by a PWM controller or logic gates with fast transition times (< 200 ns). The input stages to the drivers function as a digital gate, and they are not intended for applications where a slow changing input voltage is used to generate a switching output when the logic threshold of the input section is reached. While this may not be harmful to the driver, the output of the driver may switch repeatedly at a high frequency.

Users should not attempt to shape the input signals to the driver in an attempt to slow down (or delay) the signal at the output. If limiting the rise or fall times to the power device is desired, limit the rise or fall times to the power device, then an external resistance can be added between the output of the driver and the load device, which is generally a power MOSFET gate. The external resistor may also help remove power dissipation from the device package, as discussed in the セクション 10.3.

7.3.2 Output Stage

Inverting outputs of the UCC2742x-Q1 are intended to drive external P-channel MOSFETs. Noninverting outputs of the UCC2742x-Q1 are intended to drive external N-channel MOSFETs.

Each output stage is capable of supplying ±4-A peak current pulses and swings to both V_{DD} and GND. The pullup and pulldown circuits of the driver are constructed of bipolar and MOSFET transistors in parallel. The peak output current rating is the combined current from the bipolar and MOSFET transistors. The output resistance is the $R_{DS(on)}$ of the MOSFET transistor when the voltage on the driver output is less than the saturation voltage of the bipolar transistor. Each output stage also provides a very low impedance to overshoot

Copyright © 2023 Texas Instruments Incorporated

and undershoot due to the body diode of the external MOSFET. This means that in many cases, external Schottky-clamp diodes are not required.

The UCC2742x-Q1 family delivers the 4-A gate drive where it is most needed during the MOSFET switching transition—at the Miller plateau region—providing improved efficiency gains. A unique bipolar and MOSFET hybrid output stage in parallel also allows efficient current sourcing at low supply voltages.

7.3.3 Enable

The UCC2742x-Q1 devices provide dual enable inputs for improved control of each driver channel operation. The inputs incorporate logic-compatible thresholds with hysteresis. They are internally pulled up to V_{DD} with 100-kΩ resistor for active-high operation. When ENBA and ENBB are driven high, the drivers are enabled; when ENBA and ENBB are low, the drivers are disabled. The default state of the enable pin is to enable the driver and, therefore, can be left open for standard operation. The output states when the drivers are disabled is low, regardless of the input state. See 表 7-1 for operation using enable logic.

Enable inputs are compatible with both logic signals and slowly-changing analog signals. They can be directly driven, or a power-up delay can be programmed with a capacitor between ENBA/ENBB and GND. ENBA and ENBB control input A and input B, respectively.

7.3.4 Parallel Outputs

The A and B drivers may be combined into a single driver by connecting the INA/INB inputs together and the OUTA/OUTB outputs together. Then, a single signal can control the paralleled combination as shown in 図 7-1.

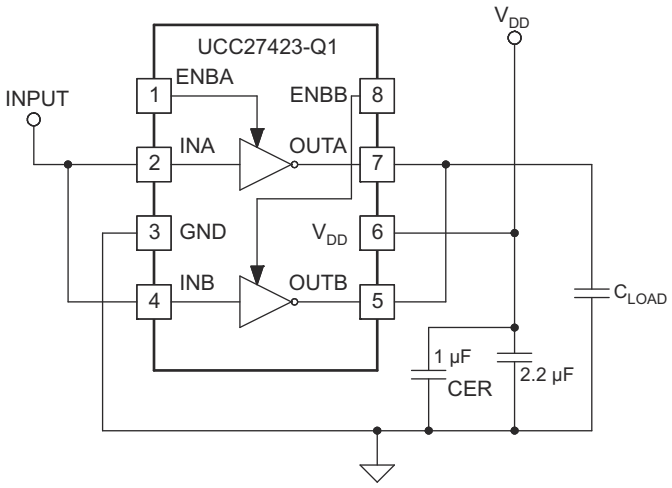

Copyright © 2016, Texas Instruments Incorporated

図 7-1. Parallel Outputs

7.3.5 Operational Waveforms and Circuit Layout

図 7-2 shows the circuit performance achievable with a single driver (half of the 8-pin IC) driving a 10-nF load. The input pulse width (not shown) is set to 300 ns to show both transitions in the output waveform. Note the linear rise and fall edges of the switching waveforms. This is due to the constant output current characteristic of the driver as opposed to the resistive output impedance of traditional MOSFET-based gate drivers.

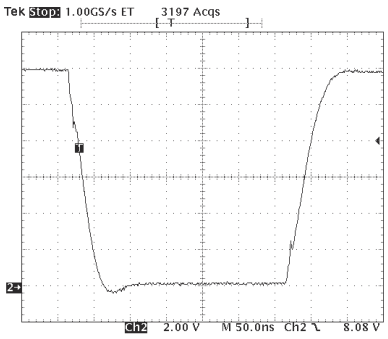

図 7-2. Pulse Response

In a power driver operating at high frequency, it is a significant challenge to get clean waveforms without much overshoot or undershoot and ringing. The low output impedance of these drivers produces waveforms with high di/dt. This tends to induce ringing in the parasitic inductances. Use the upmost care in the circuit layout. It is advantageous to connect the driver IC as close as possible to the leads. The driver IC layout has ground on the opposite side of the output, so the ground must be connected to the bypass capacitors and the load with copper trace as wide as possible. These connections must also be made with a small enclosed loop area to minimize the inductance.

7.3.6 V_{DD}

Although quiescent V_{DD} current is very low, total supply current is higher, depending on OUTA and OUTB current and the programmed oscillator frequency. Total V_{DD} current is the sum of quiescent V_{DD} current and the average OUT current. Knowing the operating frequency and the MOSFET gate charge (Q_g), average OUT current can be calculated from 式 1.

$$I_{OUT} = Q_g \times f \quad (1)$$

where

- f is frequency

For the best high-speed circuit performance, TI recommends two V_{DD} bypass capacitors to prevent noise problems. TI highly recommends using surface-mount components. A 0.1-µF ceramic capacitor must be located closest to the V_{DD} to ground connection. In addition, a larger capacitor (such as 1 µF) with relatively low ESR must be connected in parallel, to help deliver the high current peaks to the load. The parallel combination of capacitors must present a low impedance characteristic for the expected current levels in the driver application.

7.4 Device Functional Modes

With V_{DD} power supply in the range of 4 V to 16 V, the output stage is dependent on the states of the HI and LI pins. 表 7-1 shows the UCC2742x-Q1 truth table.

表 7-1. Input and Output Logic Table

ENBA	ENBB	INPUTS (V_{IN_L}, V_{IN_H})		UCC27423-Q1		UCC27424-Q1		UCC27425-Q1	
		INA	INB	OUTA	OUTB	OUTA	OUTB	OUTA	OUTB
H	H	L	L	H	H	L	L	H	L
H	H	L	H	H	L	L	H	H	H
H	H	H	L	L	H	H	L	L	L
H	H	H	H	L	L	H	H	L	H
L	L	X	X	L	L	L	L	L	L

Importantly, if INA and INB are not used, they must be tied to either VDD or GND; they must not be left floating.

Copyright © 2023 Texas Instruments Incorporated

8 Application and Implementation

注

以下のアプリケーション情報は、TI の製品仕様に含まれるものではなく、TI ではその正確性または完全性を保証いたしません。個々の目的に対する製品の適合性については、お客様の責任で判断していただくことになります。お客様は自身の設計実装を検証しテストすることで、システムの機能を確認する必要があります。

8.1 Application Information

High-frequency power supplies often require high-speed, high-current drivers such as the UCC2742x-Q1 family. A leading application is the need to provide a high-power buffer stage between the PWM output of the control IC and the gates of the primary power MOSFET or IGBT switching devices. In other cases, the driver IC is used to drive the power device gates through a drive transformer. Synchronous rectification supplies also have the need to simultaneously drive multiple devices which can present an extremely large load to the control circuitry.

Driver ICs are used when it is not feasible to have the primary PWM regulator IC directly drive the switching devices for one or more reasons. The PWM IC may not have the brute drive capability required for the intended switching MOSFET, limiting the switching performance in the application. In other cases, there may be a desire to minimize the effect of high-frequency switching noise by placing the high current driver physically close to the load. Also, newer ICs that target the highest operating frequencies may not incorporate onboard gate drivers at all. Their PWM outputs are only intended to drive the high impedance input to a driver such as the UCC2742x-Q1. Finally, the control IC may be under thermal stress due to power dissipation, and an external driver can help by moving the heat from the controller to an external package.

8.2 Typical Application

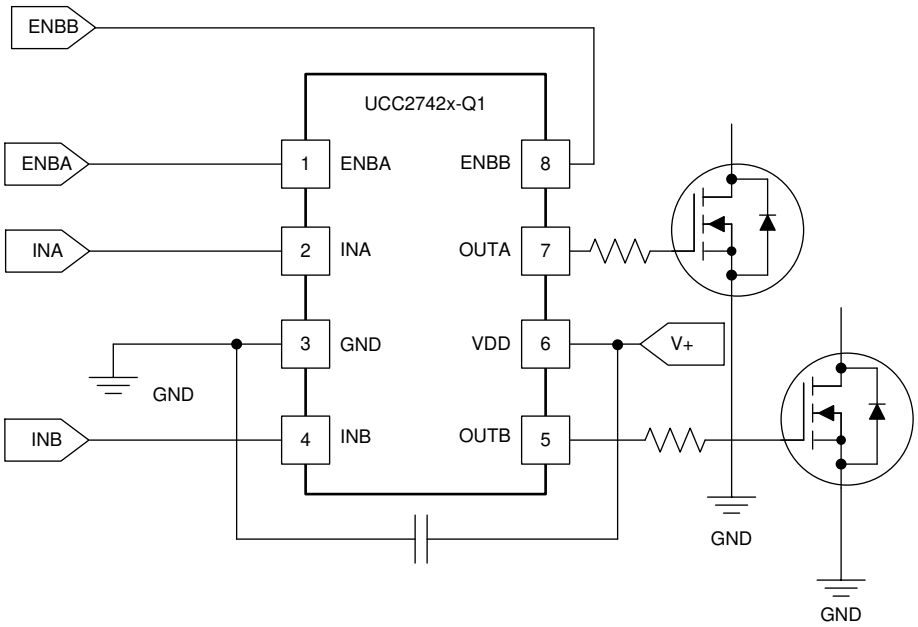

図 8-1. UCC2742x-Q1 Driving Two Independent MOSFETs

8.2.1 Design Requirements

To select proper device from UCC2742x-Q1 family, TI recommends first checking the appropriate logic for the outputs. The UCC27423-Q1 has dual inverting outputs, the UCC27424-Q1 has dual noninverting outputs, and the UCC27425-Q1 has an inverting channel A and noninverting channel B. Moreover, evaluate some

considerations to make the most appropriate selection. Among these considerations are V_{DD}, drive current, and power dissipation.

8.2.2 Detailed Design Procedure

8.2.2.1 Source and Sink Capabilities During Miller Plateau

Large power MOSFETs present a large load to the control circuitry. Proper drive is required for efficient, reliable operation. The UCC2742x-Q1 drivers have been optimized to provide maximum drive to a power MOSFET during the Miller plateau region of the switching transition. This interval occurs while the drain voltage is swinging between the voltage levels dictated by the power topology, requiring the charging and discharging of the drain-gate capacitance with current supplied or removed by the driver device.

Two circuits are used to test the current capabilities of the UCC2742x-Q1 driver. In each case, external circuitry is added to clamp the output near 5 V while the IC is sinking or sourcing current. An input pulse of 250 ns is applied at a frequency of 1 kHz in the proper polarity for the respective test. In each test, there is a transient period where the current peaked up and then settled down to a steady-state value. The noted current measurements are made at a time of 200 ns after the input pulse is applied, after the initial transient.

The circuit in 図 8-2 is used to verify the current sink capability when the output of the driver is clamped around 5 V, a typical value of gate-source voltage during the Miller plateau region. The UCC2742x-Q1 is found to sink 4.5 A at V_{DD} = 15 V and 4.28 A at V_{DD} = 12 V.

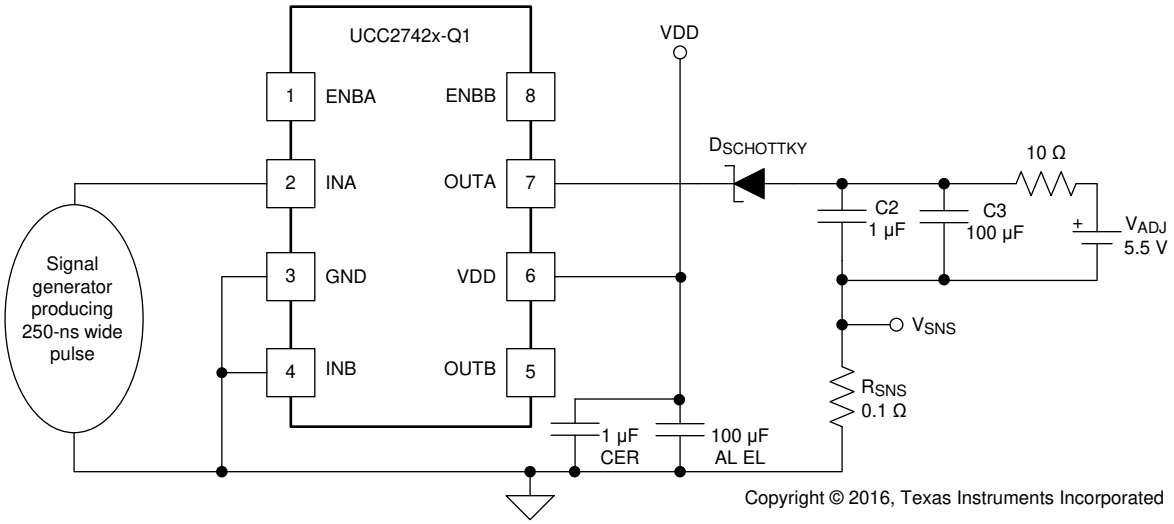

図 8-2. Current Sink Capability Test

The circuit show in 図 8-3 is used to test the current source capability with the output clamped around 5 V with a string of Zener diodes. The UCC2742x-Q1 is found to source 4.8 A at V_{DD} = 15 V and 3.7 A at V_{DD} = 12 V.

Copyright © 2023 Texas Instruments Incorporated

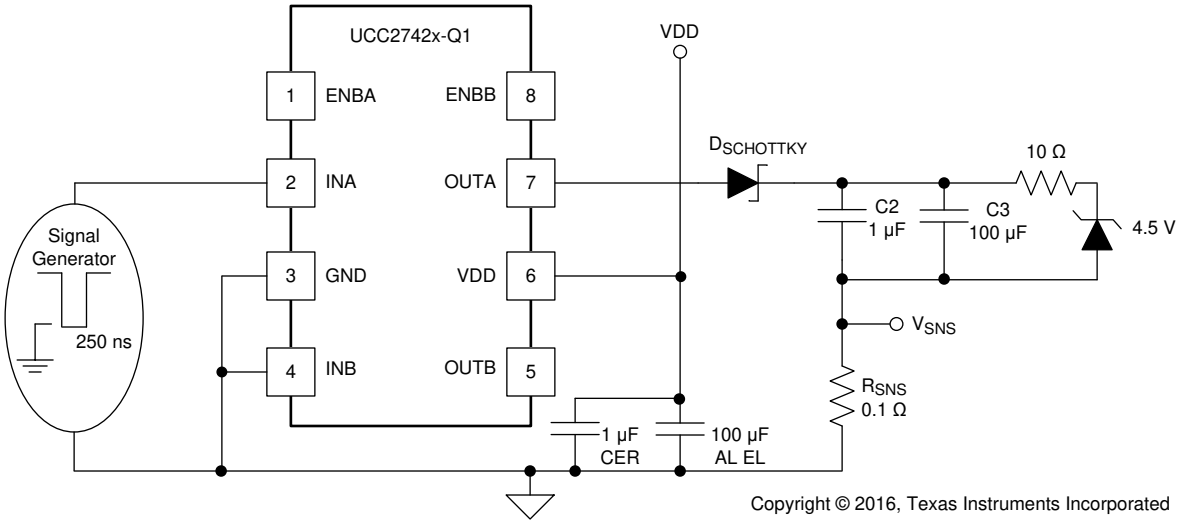

図 8-3. Current Source Capability Test

8.2.2.2 Drive Current and Power Requirements

The UCC2742x-Q1 family of drivers are capable of delivering 4 A of current to a MOSFET gate for a period of several hundred nanoseconds. High-peak current is required to turn the device ON quickly. Then, to turn the device OFF, the driver is required to sink a similar amount of current to ground. This repeats at the operating frequency of the power device. A MOSFET is used in this discussion because it is the most common type of switching device used in high frequency power conversion equipment.

Reference 1 in the *セクション 11.2.1* section discuss the current required to drive a power MOSFET and other capacitive-input switching devices. Reference 1 in includes information on the previous generation of bipolar IC gate drivers.

When a driver IC is tested with a discrete, capacitive load, it is a fairly simple matter to calculate the power that is required from the bias supply. The energy that must be transferred from the bias supply to charge the capacitor is given by 式 2.

$$E = \frac{1}{2}CV^2 \tag{2}$$

where

- C = load capacitor
- V = bias voltage (feeding the driver)

There is an equal amount of energy transferred to ground when the capacitor is discharged. This leads to a power loss given by 式 3.

$$P = CV^2 \times f \tag{3}$$

where

- f = switching frequency

This power is dissipated in the resistive elements of the circuit. Thus, with no external resistor between the driver and gate, this power is dissipated inside the driver. Half of the total power is dissipated when the capacitor is charged, and the other half is dissipated when the capacitor is discharged. An actual example using the conditions of the previous gate drive waveform should help clarify this.

With V_{DD} = 12 V, C_{LOAD} = 10 nF, and f = 300 kHz, the power loss can be calculated as 式 4.

Copyright © 2023 Texas Instruments Incorporated

$$P = 10\ nF \times (12\ V)^2 \times (300\ kHz) = 0.432\ W \quad (4)$$

With a 12-V supply, this would equate to a current of 式 5.

$$I = \frac{P}{V} = \frac{0.432\ W}{12\ V} = 36\ mA \quad (5)$$

The actual current measured from the supply was 0.037 A, and is very close to the predicted value. But, consider the I_{DD} current that is due to the IC internal consumption. With no load, the IC current draw is 0.0027 A. Under this condition, the output rise and fall times are faster than with a load. This could lead to an almost insignificant, yet measurable current due to cross-conduction in the output stages of the driver. However, these small current differences are buried in the high-frequency switching spikes, and are beyond the measurement capabilities of a basic lab setup. The measured current with 10-nF load is reasonably close to that expected.

The switching load presented by a power MOSFET can be converted to an equivalent capacitance by examining the gate charge required to switch the device. This gate charge includes the effects of the input capacitance plus the added charge needed to swing the drain of the device between the ON and OFF states. Most manufacturers provide specifications that provide the typical and maximum gate charge, in nC, to switch the device under specified conditions. Using the gate charge Q_g, one can determine the power that must be dissipated when charging a capacitor. This is done by using the equivalence $Q_g = C_{eff}V$ to provide the power loss in 式 6.

$$P = C \times V^2 \times f = V \times Q_g \times f \quad (6)$$

式 6 allows a power designer to calculate the bias power required to drive a specific MOSFET gate at a specific bias voltage.

8.2.3 Application Curves

図 8-4 and 図 8-5 show rising and falling time and turnon and turnoff propagation delay testing waveform in room temperature for UCC27424-Q1, and waveform measurement data (see the bottom part of the waveform). Each channel, INA/INB/OUTA/OUTB, is labeled and displayed on the left hand of the waveforms.

The load capacitance testing condition is 1.8 nF, V_{DD} = 12 V, and f = 300 kHz.

HI and LI share one same input from function generator; therefore, besides the propagation delay and rising or falling time, the difference of the propagation delay between HO and LO gives the propagation delay matching data.

Note the linear rise and fall edges of the switching waveforms. This is due to the constant output current characteristic of the driver as opposed to the resistive output impedance of traditional MOSFET-based gate drivers.

Copyright © 2023 Texas Instruments Incorporated

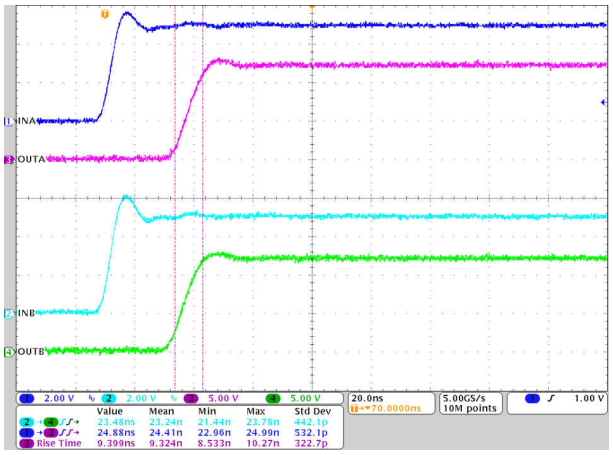

CL = 1.8 nF, V_{DD} = 12 V, f = 300 kHz

図 8-4. Rising Time and Turnon Propagation Delay

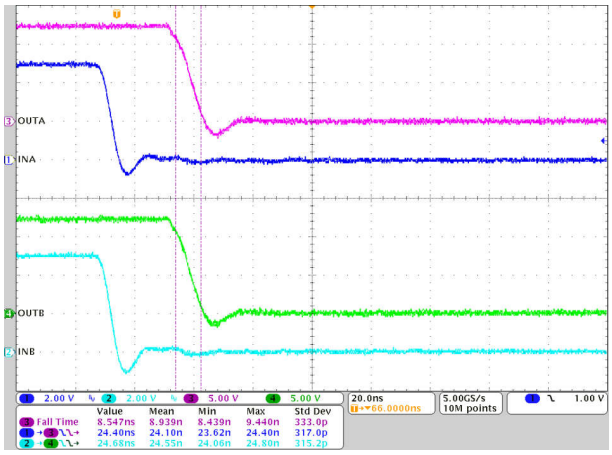

CL = 1.8 nF, V_{DD} = 12 V, f = 300 kHz

図 8-5. Falling Time and Turnoff Propagation Delay

9 Power Supply Recommendations

The recommended bias supply voltage range for UCC2742x-Q1 is from 4 V to 15 V. The upper end of this range is driven by the absolute maximum voltage rating of the V_{DD} (16 V). TI recommends keeping proper margin to allow for transient voltage spikes. A local bypass capacitor must be placed between the VDD and GND pins. And this capacitor must be placed as close to the device as possible. A low ESR, ceramic surface-mount capacitor is recommended. TI recommends using 2 capacitors across VDD and GND: a 100-nF ceramic surface-mount capacitor for high-frequency filtering placed very close to VDD and GND pin, and another surface-mount capacitor (220 nF to 10 µF) for IC bias requirements.

10 Layout

10.1 Layout Guidelines

Optimum performance of gate drivers cannot be achieved without taking due considerations during circuit board layout. The following points are emphasized:

1. Low ESR or ESL capacitors must be connected close to the IC between VDD and GND pins to support high peak currents drawn from VDD during the turnon of the external MOSFETs.
2. Grounding considerations:
   - The first priority in designing grounding connections is to confine the high peak currents that charge and discharge the MOSFET gates to a minimal physical area. This decreases the loop inductance and minimizes noise issues on the gate terminals of the MOSFETs. The gate driver must be placed as close as possible to the MOSFETs.
   - Star-point grounding is a good way to minimize noise coupling from one current loop to another. The GND of the driver is connected to the other circuit nodes such as source of power MOSFET and ground of PWM controller at one, single point. The connected paths must be as short as possible to reduce inductance.
   - Use a ground plane to provide noise shielding. Fast rise and fall times at OUT may corrupt the input signals during transition. The ground plane must not be a conduction path for any current loop. Instead the ground plane must be connected to the star-point with one single trace to establish the ground potential. In addition to noise shielding, the ground plane can help in power dissipation as well.
3. In noisy environments, tying inputs of an unused channel of the UCC2742x-Q1 device to VDD or GND using short traces in order to ensure that the output is enabled and to prevent noise from causing malfunction in the output may be necessary.
4. Separate power traces and signal traces, such as output and input signals.

Copyright © 2023 Texas Instruments Incorporated

10.2 Layout Example

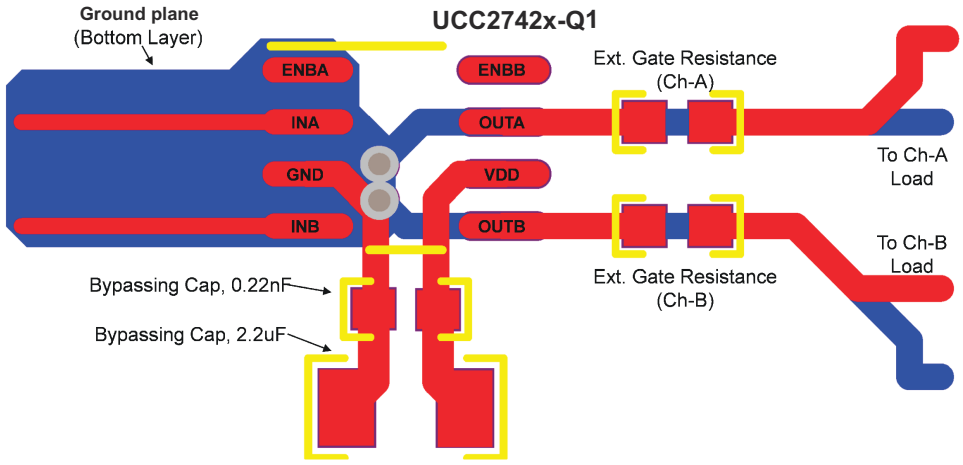

図 10-1. Recommended PCB Layout for UCC2742x-Q1

10.3 Thermal Considerations

The useful range of a driver is greatly affected by the drive power requirements of the load and the thermal characteristics of the IC package. For a power driver to be useful over a particular temperature range, the package must allow for the efficient removal of the heat produced while keeping the junction temperature within rated limits. The UCC2742x-Q1 family of drivers is available in three different packages to cover a range of application requirements.

As shown in the power dissipation rating table, the 8-pin SOIC (D) package has a power rating of around 0.5 W with T_A = 70°C. This limit is imposed in conjunction with the power derating factor also given in the セクション 6.7 table. Note that the power dissipation in our earlier example is 0.432 W with a 10-nF load, 12 V_{DD}, switched at 300 kHz. Thus, only one load of this size could be driven using the D package, even if the two onboard drivers are paralleled. The difficulties with heat removal limit the drive available in the older packages.

The 8-pin MSOP with PowerPAD (DGN) package significantly relieves this concern by offering an effective means of removing the heat from the semiconductor junction. As described in reference 2 of the セクション 11.2.1, the PowerPAD packages offer a leadframe die pad that is exposed at the base of the package. This pad is soldered to the copper on the PCB directly underneath the IC package, reducing the $R_{\theta\ JC(bot)}$ down to 5.9°C/W. Data is presented in reference 2 of セクション 11.2.1 to show that the power dissipation can be quadrupled in the PowerPAD configuration when compared to the standard packages. The PCB must be designed with thermal lands and thermal vias to complete the heat removal subsystem. This allows a significant improvement in heat sinking over that available in the D package, and is shown to more than double the power capability of the D package. Note that the PowerPAD is not directly connected to any leads of the package. However, it is electrically and thermally connected to the substrate which is the ground of the device.

Copyright © 2023 Texas Instruments Incorporated

11 Device and Documentation Support

11.1 Device Support

11.1.1 サード・パーティ製品に関する免責事項

サード・パーティ製品またはサービスに関するテキサス・インスツルメンツの出版物は、単独またはテキサス・インスツルメンツの製品、サービスと一緒に提供される場合に関係なく、サード・パーティ製品またはサービスの適合性に関する是認、サード・パーティ製品またはサービスの是認の表明を意味するものではありません。

11.2 Documentation Support

11.2.1 Related Documentation

For related documentation see the following:

1. *Practical Considerations in High Performance MOSFET, IGBT and MCT Gate Drive Circuits*
2. *PowerPad Thermally Enhanced Package*
3. *PowerPAD Made Easy*

11.3 ドキュメントの更新通知を受け取る方法

ドキュメントの更新についての通知を受け取るには、www.tij.co.jp のデバイス製品フォルダを開いてください。[通知] をクリックして登録すると、変更されたすべての製品情報に関するダイジェストを毎週受け取ることができます。 変更の詳細については、改訂されたドキュメントに含まれている改訂履歴をご覧ください。

11.4 サポート・リソース

テキサス・インスツルメンツ E2E™ サポート・フォーラムは、エンジニアが検証済みの回答と設計に関するヒントをエキスパートから迅速かつ直接得ることができる場所です。既存の回答を検索したり、独自の質問をしたりすることで、設計で必要な支援を迅速に得ることができます。

リンクされているコンテンツは、各寄稿者により「現状のまま」提供されるものです。これらはテキサス・インスツルメンツの仕様を構成するものではなく、必ずしもテキサス・インスツルメンツの見解を反映したものではありません。テキサス・インスツルメンツの使用条件を参照してください。

11.5 Trademarks

PowerPAD™ and テキサス・インスツルメンツ E2E™ are trademarks of Texas Instruments.
すべての商標は、それぞれの所有者に帰属します。

11.6 静電気放電に関する注意事項



この IC は、ESD によって破損する可能性があります。テキサス・インスツルメンツは、IC を取り扱う際には常に適切な注意を払うことを推奨します。正しい取り扱いおよび設置手順に従わない場合、デバイスを破損するおそれがあります。

ESD による破損は、わずかな性能低下からデバイスの完全な故障まで多岐にわたります。精密な IC の場合、パラメータがわずかに変化するだけで公表されている仕様から外れる可能性があるため、破損が発生しやすくなっています。

11.7 用語集

テキサス・インスツルメンツ用語集　　この用語集には、用語や略語の一覧および定義が記載されています。

Copyright © 2023 Texas Instruments Incorporated

12 Revision History

資料番号末尾の英字は改訂を表しています。その改訂履歴は英語版に準じています。

Changes from Revision H (October 2016) to Revision I (November 2023) **Page**

- Deleted top-side marking and T_A range from the Device Comparison Table. Refer to the Mechanical, Packaging, and Orderable Information for this information ... 3
- Changed ESD CDM rating value from ±1500 V to ±1000 V in ESD Ratings ... 6
- Changed input threshold voltage values, deleted V_{OH} output high level and V_{OL} output low level, changed output resistance high and output resistance low values and deleted Latch-up protection from Electrical Characteristics ... 8
- Changed UCC274323 to UCC27423 in 図 6-9, changed 図 6-27 and added -Q1 to part number in several graphs ... 11

Changes from Revision G (May 2016) to Revision H (October 2016) **Page**

- Changed the UCC27424-Q1 pinout drawing to show two, noninverting channels ... 4
- Changed the units of the capacitors in the *Parallel Outputs* figure from mF to µF ... 17

Changes from Revision F (September 2012) to Revision G (May 2016) **Page**

- 「ESD 定格」表、「機能説明」セクション、「デバイスの機能モード」セクション、「アプリケーションと実装」セクション、「電源に関する推奨事項」セクション、「レイアウト」セクション、「デバイスおよびドキュメントのサポート」セクション、「メカニカル、パッケージ、および注文情報」セクションを追加 ... 1
- 「特長」および「概要」セクションに MSOP パッケージの情報を追加 ... 1

Changes from Revision E (July, 2012) to Revision F (September, 2012) **Page**

- Changed the word terminal to pin per new standards ... 4
- Removed derating factor column in dissipation ratings table, and changed the θ_{JC} value from 4.7 to 11.9, the θ_{JA} value from 50–59 to 63, and the power rating T_A = 70°C (mW) value from 1370 to 873 for the DGN package. ... 10

13 Mechanical, Packaging, and Orderable Information

The following pages include mechanical, packaging, and orderable information. This information is the most current data available for the designated devices. This data is subject to change without notice and revision of this document. For browser-based versions of this data sheet, refer to the left-hand navigation.

Copyright © 2023 Texas Instruments Incorporated

PACKAGING INFORMATION

Orderable part number	Status (1)	Material type (2)	Package | Pins	Package qty | Carrier	RoHS (3)	Lead finish/ Ball material (4)	MSL rating/ Peak reflow (5)	Op temp (°C)	Part marking (6)
UCC27423QDGNRQ1	Active	Production	HVSSOP (DGN) | 8	2500 | LARGE T&R	Yes	NIPDAU	Level-1-260C-UNLIM	-40 to 125	EADQ
UCC27423QDGNRQ1.A	Active	Production	HVSSOP (DGN) | 8	2500 | LARGE T&R	Yes	NIPDAU	Level-1-260C-UNLIM	-40 to 125	EADQ
UCC27423QDRQ1	Active	Production	SOIC (D) | 8	2500 | LARGE T&R	-	NIPDAU	Level-1-260C-UNLIM	-40 to 125	27423Q
UCC27423QDRQ1.A	Active	Production	SOIC (D) | 8	2500 | LARGE T&R	-	NIPDAU	Level-1-260C-UNLIM	-40 to 125	27423Q
UCC27424QDGNRQ1	Active	Production	HVSSOP (DGN) | 8	2500 | LARGE T&R	Yes	NIPDAUAG	Level-2-260C-1 YEAR	-40 to 125	EPJQ
UCC27424QDGNRQ1.A	Active	Production	HVSSOP (DGN) | 8	2500 | LARGE T&R	Yes	NIPDAUAG	Level-2-260C-1 YEAR	-40 to 125	EPJQ
UCC27424QDRQ1	Active	Production	SOIC (D) | 8	2500 | LARGE T&R	Yes	NIPDAU	Level-1-260C-UNLIM	-40 to 125	27424Q
UCC27424QDRQ1.A	Active	Production	SOIC (D) | 8	2500 | LARGE T&R	Yes	NIPDAU	Level-1-260C-UNLIM	-40 to 125	27424Q
UCC27425QDRQ1	Active	Production	SOIC (D) | 8	2500 | LARGE T&R	-	NIPDAU	Level-1-260C-UNLIM	-40 to 125	27425Q
UCC27425QDRQ1.A	Active	Production	SOIC (D) | 8	2500 | LARGE T&R	-	NIPDAU	Level-1-260C-UNLIM	-40 to 125	27425Q

(1) **Status:** For more details on status, see our product life cycle.

(2) **Material type:** When designated, preproduction parts are prototypes/experimental devices, and are not yet approved or released for full production. Testing and final process, including without limitation quality assurance, reliability performance testing, and/or process qualification, may not yet be complete, and this item is subject to further changes or possible discontinuation. If available for ordering, purchases will be subject to an additional waiver at checkout, and are intended for early internal evaluation purposes only. These items are sold without warranties of any kind.

(3) **RoHS values:** Yes, No, RoHS Exempt. See the TI RoHS Statement for additional information and value definition.

(4) **Lead finish/Ball material:** Parts may have multiple material finish options. Finish options are separated by a vertical ruled line. Lead finish/Ball material values may wrap to two lines if the finish value exceeds the maximum column width.

(5) **MSL rating/Peak reflow:** The moisture sensitivity level ratings and peak solder (reflow) temperatures. In the event that a part has multiple moisture sensitivity ratings, only the lowest level per JEDEC standards is shown. Refer to the shipping label for the actual reflow temperature that will be used to mount the part to the printed circuit board.

(6) **Part marking:** There may be an additional marking, which relates to the logo, the lot trace code information, or the environmental category of the part.

Multiple part markings will be inside parentheses. Only one part marking contained in parentheses and separated by a "~" will appear on a part. If a line is indented then it is a continuation of the previous line and the two combined represent the entire part marking for that device.

Important Information and Disclaimer: The information provided on this page represents TI's knowledge and belief as of the date that it is provided. TI bases its knowledge and belief on information provided by third parties, and makes no representation or warranty as to the accuracy of such information. Efforts are underway to better integrate information from third parties. TI has taken and continues to take reasonable steps to provide representative

and accurate information but may not have conducted destructive testing or chemical analysis on incoming materials and chemicals. TI and TI suppliers consider certain information to be proprietary, and thus CAS numbers and other limited information may not be available for release.

In no event shall TI's liability arising out of such information exceed the total purchase price of the TI part(s) at issue in this document sold by TI to Customer on an annual basis.

OTHER QUALIFIED VERSIONS OF UCC27423-Q1, UCC27424-Q1, UCC27425-Q1 :

- Catalog : UCC27423, UCC27424, UCC27425
- Enhanced Product : UCC27423-EP, UCC27424-EP

NOTE: Qualified Version Definitions:

- Catalog - TI's standard catalog product
- Enhanced Product - Supports Defense, Aerospace and Medical Applications

TAPE AND REEL INFORMATION

REEL DIMENSIONS

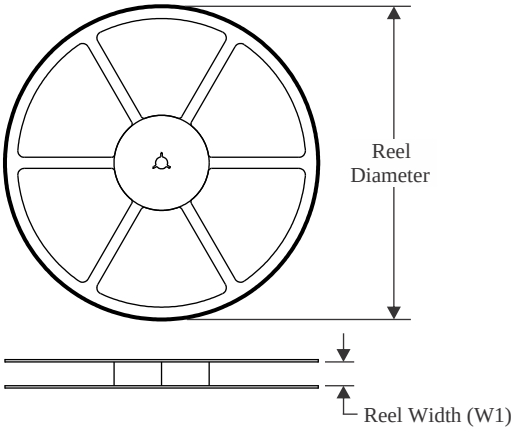

TAPE DIMENSIONS

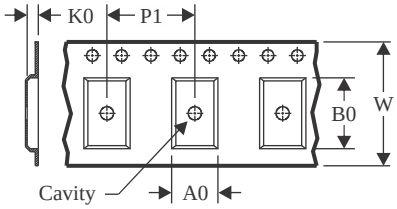

A0	Dimension designed to accommodate the component width
B0	Dimension designed to accommodate the component length
K0	Dimension designed to accommodate the component thickness
W	Overall width of the carrier tape
P1	Pitch between successive cavity centers

QUADRANT ASSIGNMENTS FOR PIN 1 ORIENTATION IN TAPE

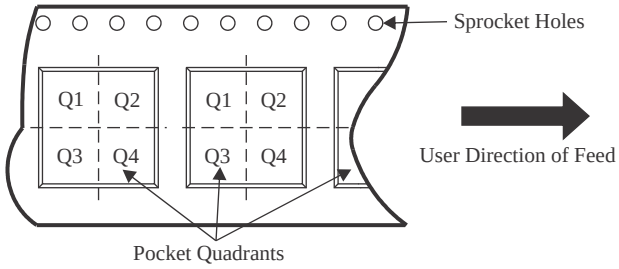

*All dimensions are nominal

Device	Package Type	Package Drawing	Pins	SPQ	Reel Diameter (mm)	Reel Width W1 (mm)	A0 (mm)	B0 (mm)	K0 (mm)	P1 (mm)	W (mm)	Pin1 Quadrant
UCC27423QDGNRQ1	HVSSOP	DGN	8	2500	330.0	12.4	5.3	3.4	1.4	8.0	12.0	Q1
UCC27423QDRQ1	SOIC	D	8	2500	330.0	12.4	6.4	5.2	2.1	8.0	12.0	Q1
UCC27424QDGNRQ1	HVSSOP	DGN	8	2500	330.0	12.4	5.3	3.4	1.4	8.0	12.0	Q1
UCC27424QDRQ1	SOIC	D	8	2500	330.0	12.4	6.4	5.2	2.1	8.0	12.0	Q1

TAPE AND REEL BOX DIMENSIONS

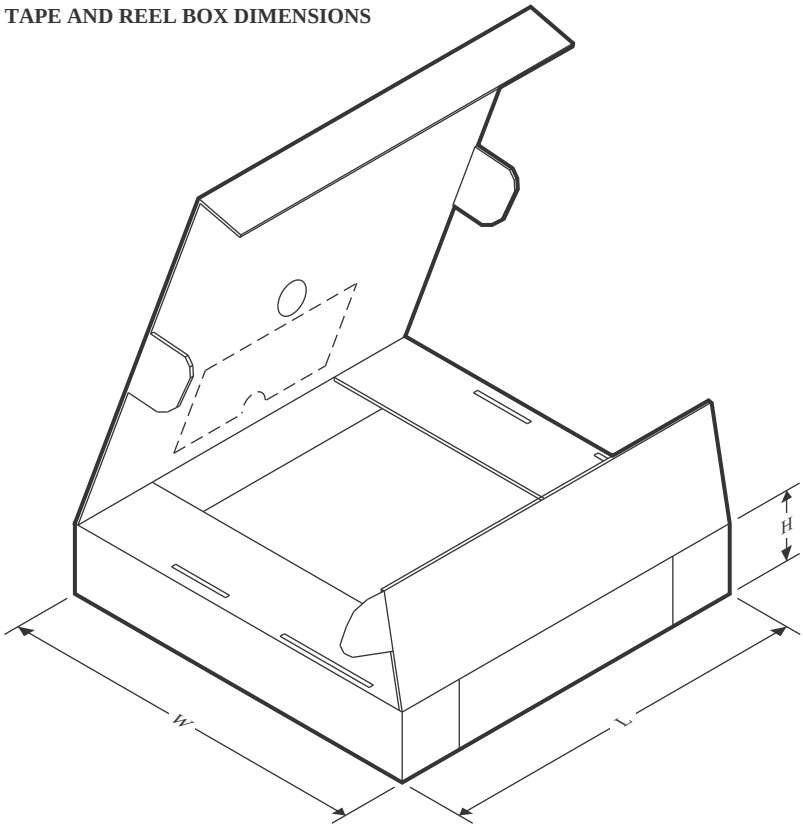

*All dimensions are nominal

Device	Package Type	Package Drawing	Pins	SPQ	Length (mm)	Width (mm)	Height (mm)
UCC27423QDGNRQ1	HVSSOP	DGN	8	2500	353.0	353.0	32.0
UCC27423QDRQ1	SOIC	D	8	2500	353.0	353.0	32.0
UCC27424QDGNRQ1	HVSSOP	DGN	8	2500	350.0	350.0	43.0
UCC27424QDRQ1	SOIC	D	8	2500	353.0	353.0	32.0

GENERIC PACKAGE VIEW

DGN 8

PowerPAD™ HVSSOP - 1.1 mm max height

3 x 3, 0.65 mm pitch

SMALL OUTLINE PACKAGE

This image is a representation of the package family, actual package may vary.
Refer to the product data sheet for package details.

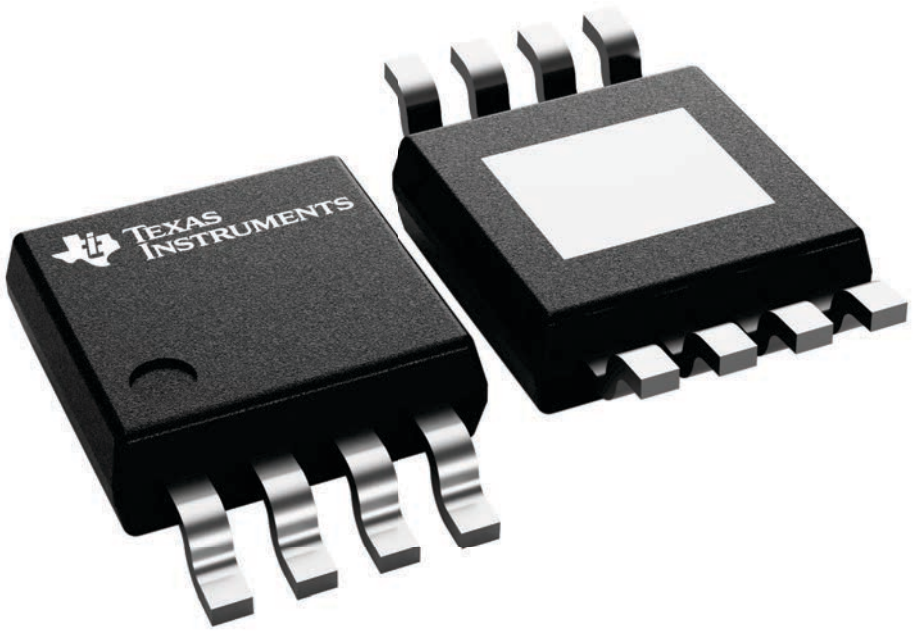

4225482/B

PACKAGE OUTLINE

DGN0008H

PowerPAD™ VSSOP - 1.1 mm max height

SMALL OUTLINE PACKAGE

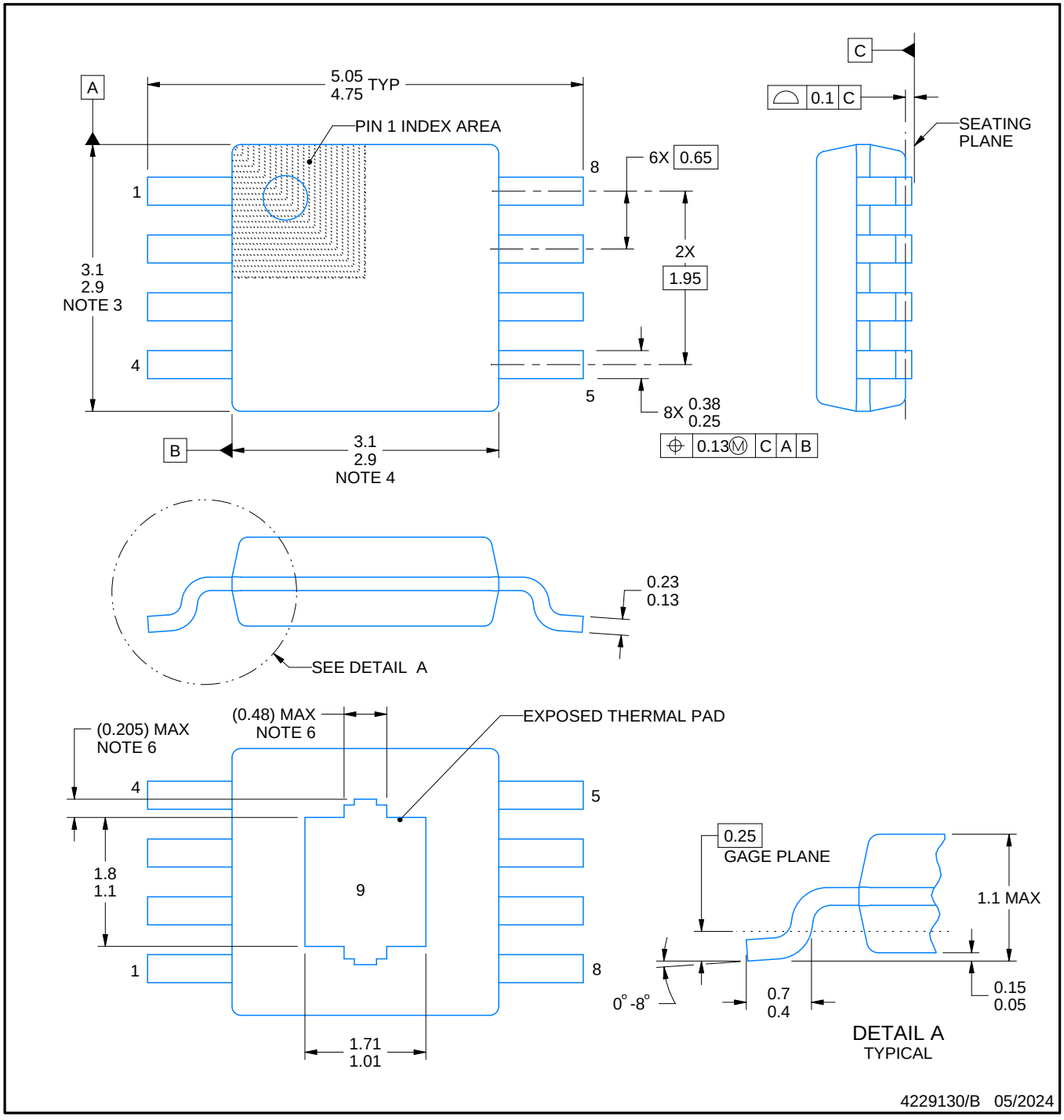

PowerPAD is a trademark of Texas Instruments.

NOTES:

1. All linear dimensions are in millimeters. Any dimensions in parenthesis are for reference only. Dimensioning and tolerancing per ASME Y14.5M.
2. This drawing is subject to change without notice.
3. This dimension does not include mold flash, protrusions, or gate burrs. Mold flash, protrusions, or gate burrs shall not exceed 0.15 mm per side.
4. This dimension does not include interlead flash. Interlead flash shall not exceed 0.25 mm per side.
5. Reference JEDEC registration MO-187.
6. Features may differ or may not be present.

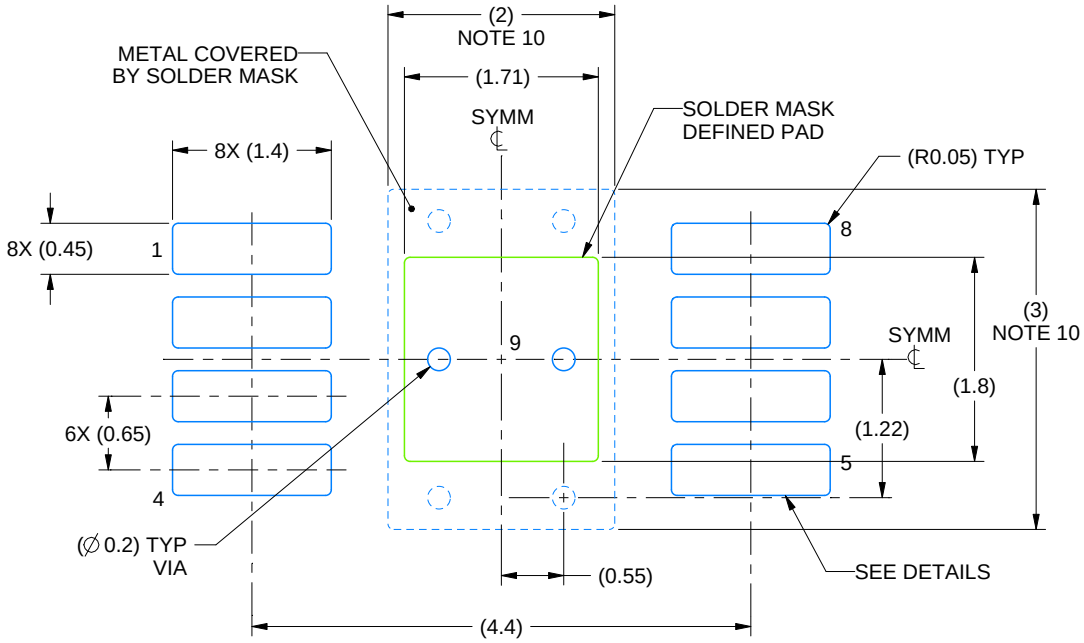

LAND PATTERN EXAMPLE
EXPOSED METAL SHOWN
SCALE: 15X

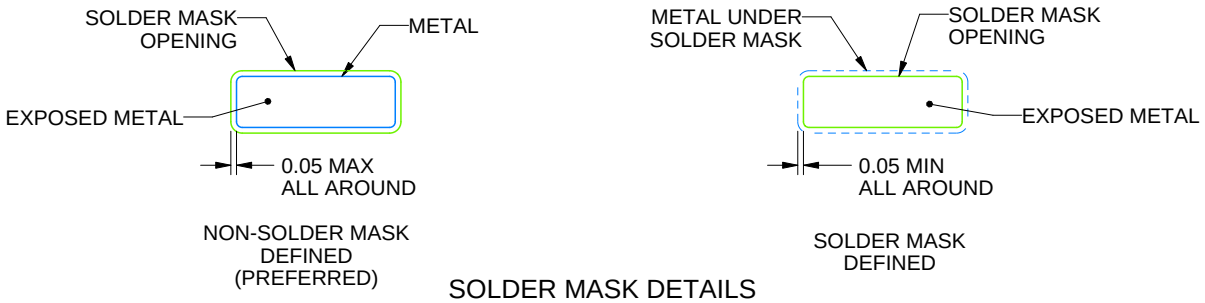

SOLDER MASK DETAILS

4229130/B 05/2024

NOTES: (continued)

7. Publication IPC-7351 may have alternate designs.
8. Solder mask tolerances between and around signal pads can vary based on board fabrication site.
9. Vias are optional depending on application, refer to device data sheet. If any vias are implemented, refer to their locations shown on this view. It is recommended that vias under paste be filled, plugged or tented.
10. Size of metal pad may vary due to creepage requirement.

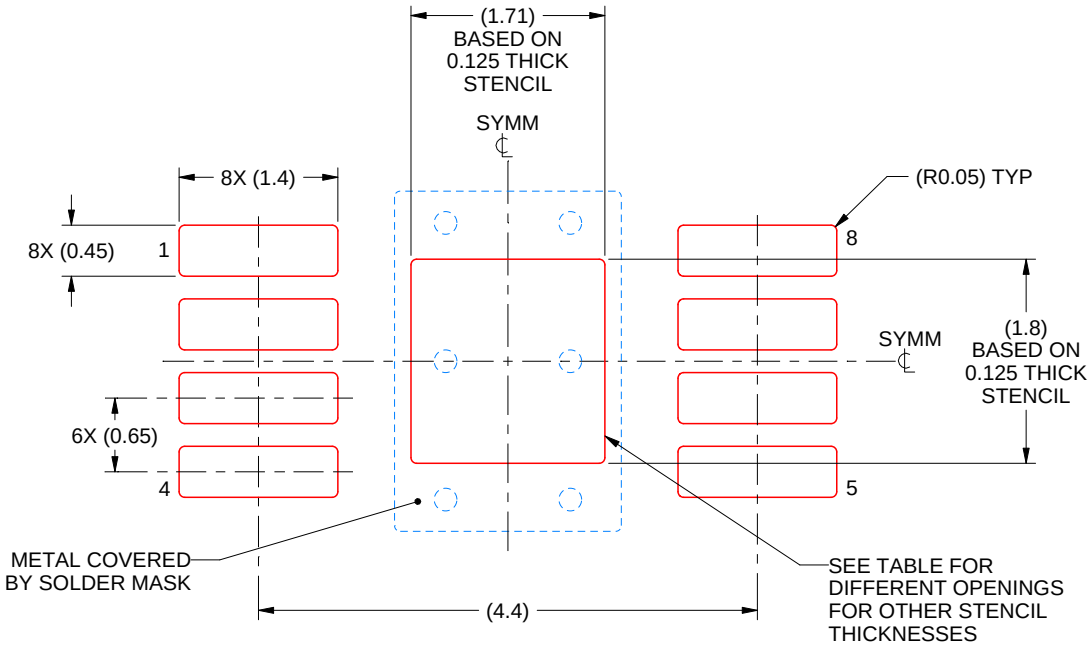

SOLDER PASTE EXAMPLE
EXPOSED PAD 9:
100% PRINTED SOLDER COVERAGE BY AREA
SCALE: 15X

STENCIL THICKNESS	SOLDER STENCIL OPENING
0.1	1.91 X 2.01
0.125	1.71 X 1.80 (SHOWN)
0.15	1.56 X 1.64
0.175	1.45 X 1.52

4229130/B 05/2024

NOTES: (continued)

11. Laser cutting apertures with trapezoidal walls and rounded corners may offer better paste release. IPC-7525 may have alternate design recommendations.
12. Board assembly site may have different recommendations for stencil design.

PACKAGE OUTLINE

DGN0008B

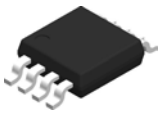

HVSSOP - 1.1 mm max height

SMALL OUTLINE PACKAGE

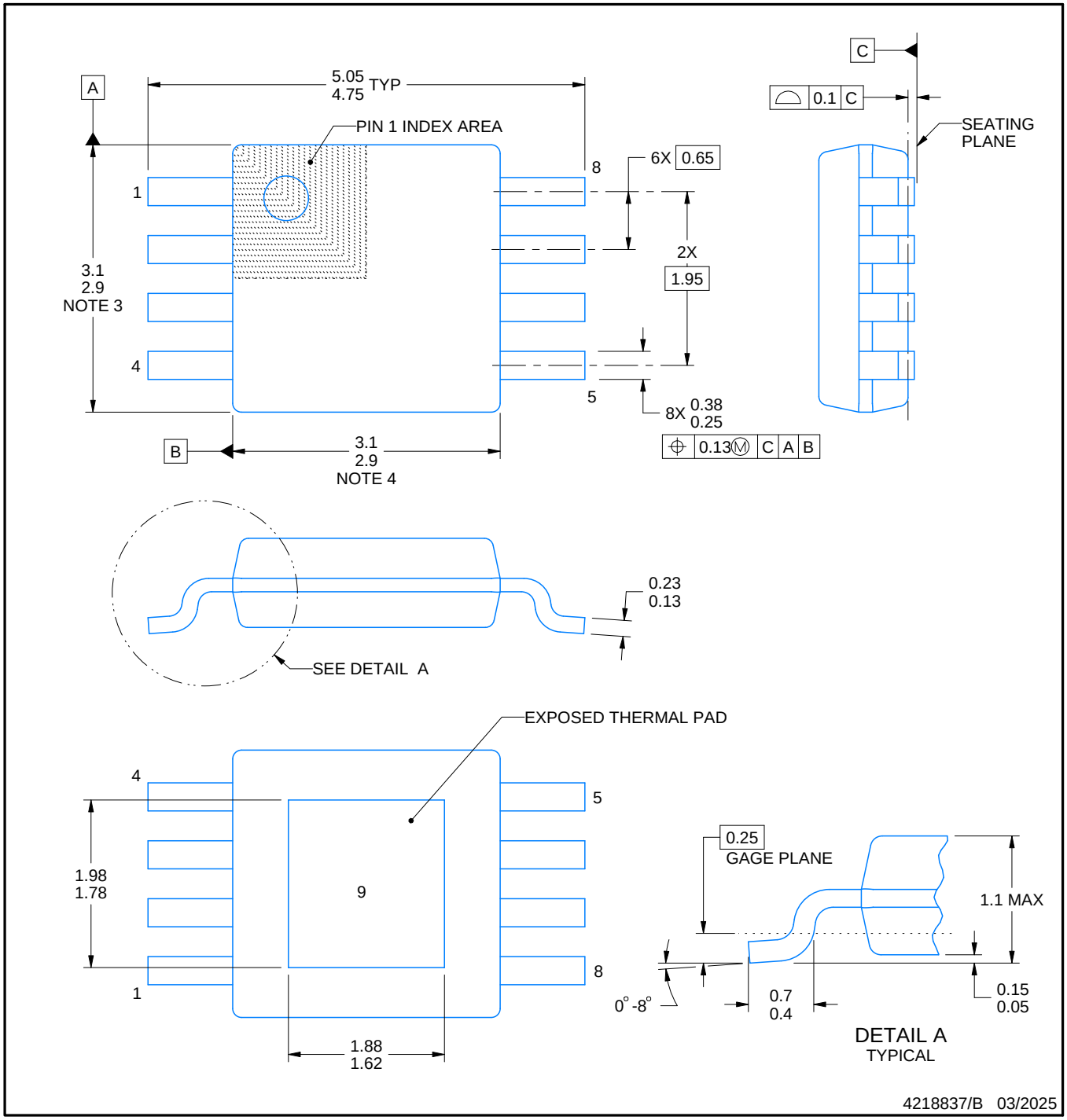

PowerPAD is a trademark of Texas Instruments.

NOTES:

1. All linear dimensions are in millimeters. Any dimensions in parenthesis are for reference only. Dimensioning and tolerancing per ASME Y14.5M.
2. This drawing is subject to change without notice.
3. This dimension does not include mold flash, protrusions, or gate burrs. Mold flash, protrusions, or gate burrs shall not exceed 0.15 mm per side.
4. This dimension does not include interlead flash. Interlead flash shall not exceed 0.25 mm per side.
5. Reference JEDEC registration MO-187.

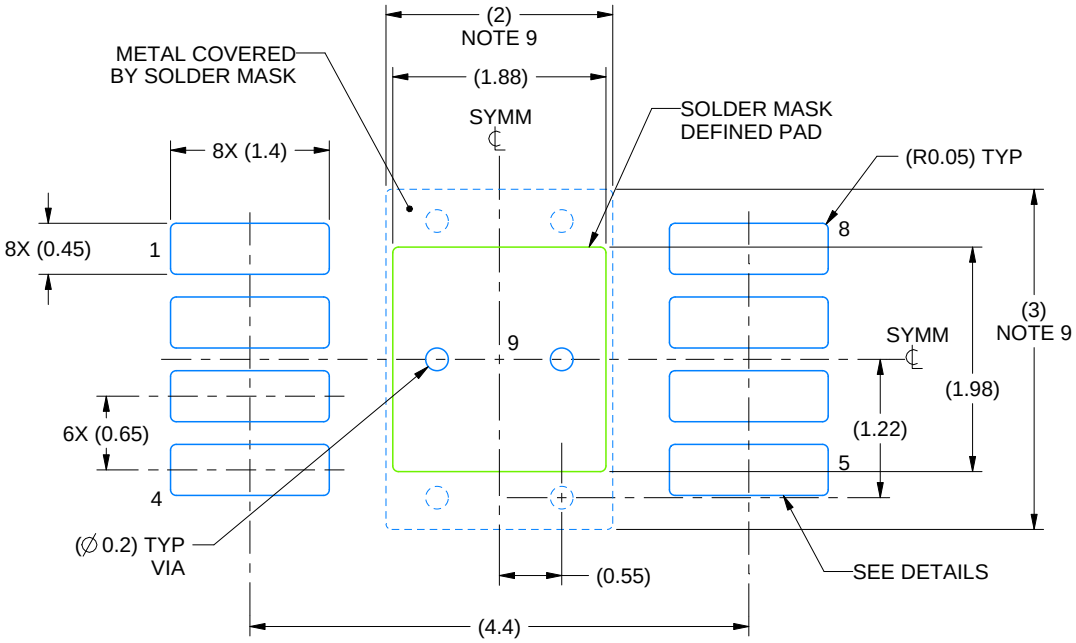

LAND PATTERN EXAMPLE
EXPOSED METAL SHOWN
SCALE: 15X

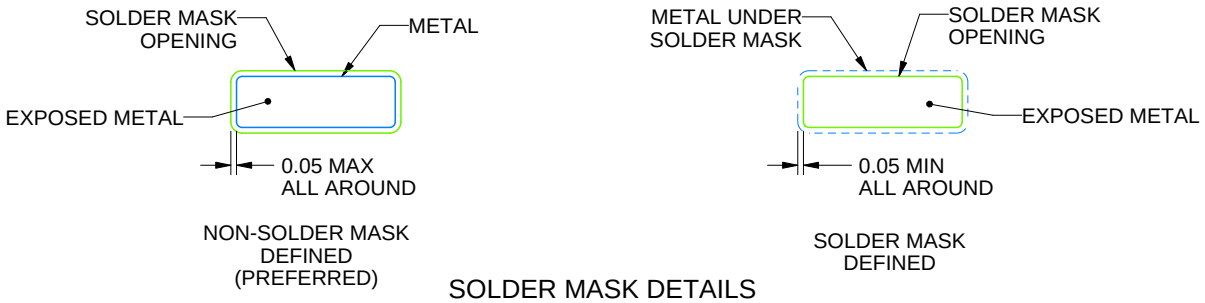

SOLDER MASK DETAILS

4218837/B 03/2025

NOTES: (continued)

6. Publication IPC-7351 may have alternate designs.
7. Solder mask tolerances between and around signal pads can vary based on board fabrication site.
8. Vias are optional depending on application, refer to device data sheet. If any vias are implemented, refer to their locations shown on this view. It is recommended that vias under paste be filled, plugged or tented.
9. Size of metal pad may vary due to creepage requirement.

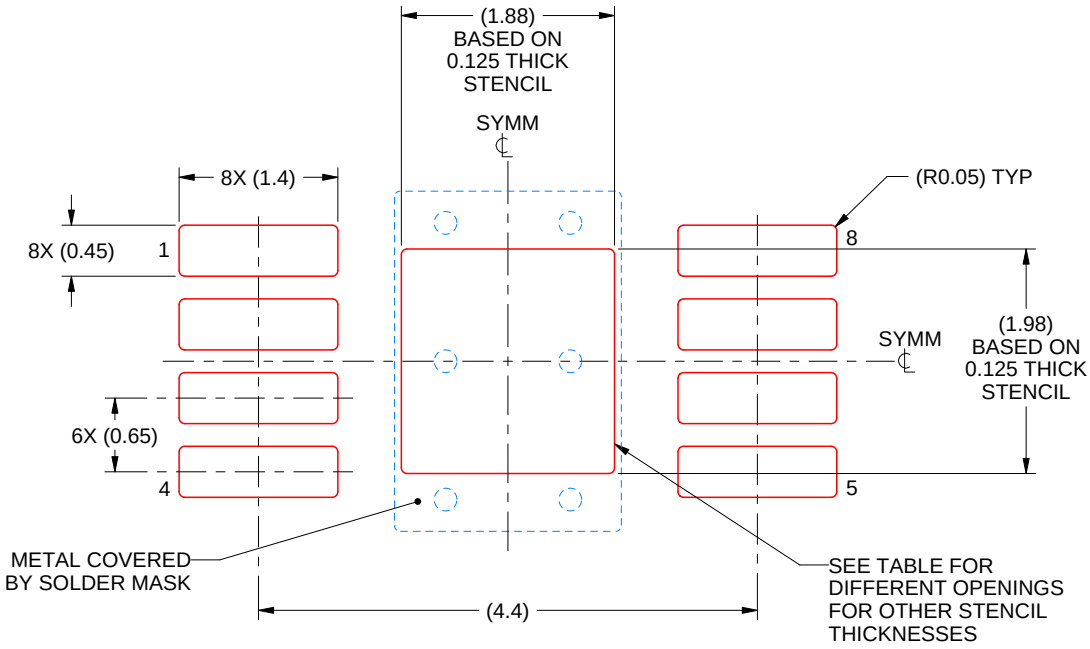

SOLDER PASTE EXAMPLE
EXPOSED PAD 9:
100% PRINTED SOLDER COVERAGE BY AREA
SCALE: 15X

STENCIL THICKNESS	SOLDER STENCIL OPENING
0.1	2.10 X 2.21
0.125	1.88 X 1.98 (SHOWN)
0.15	1.72 X 1.81
0.175	1.59 X 1.67

4218837/B 03/2025

NOTES: (continued)

10. Laser cutting apertures with trapezoidal walls and rounded corners may offer better paste release. IPC-7525 may have alternate design recommendations.
11. Board assembly site may have different recommendations for stencil design.

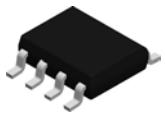

PACKAGE OUTLINE

D0008A

SOIC - 1.75 mm max height

SMALL OUTLINE INTEGRATED CIRCUIT

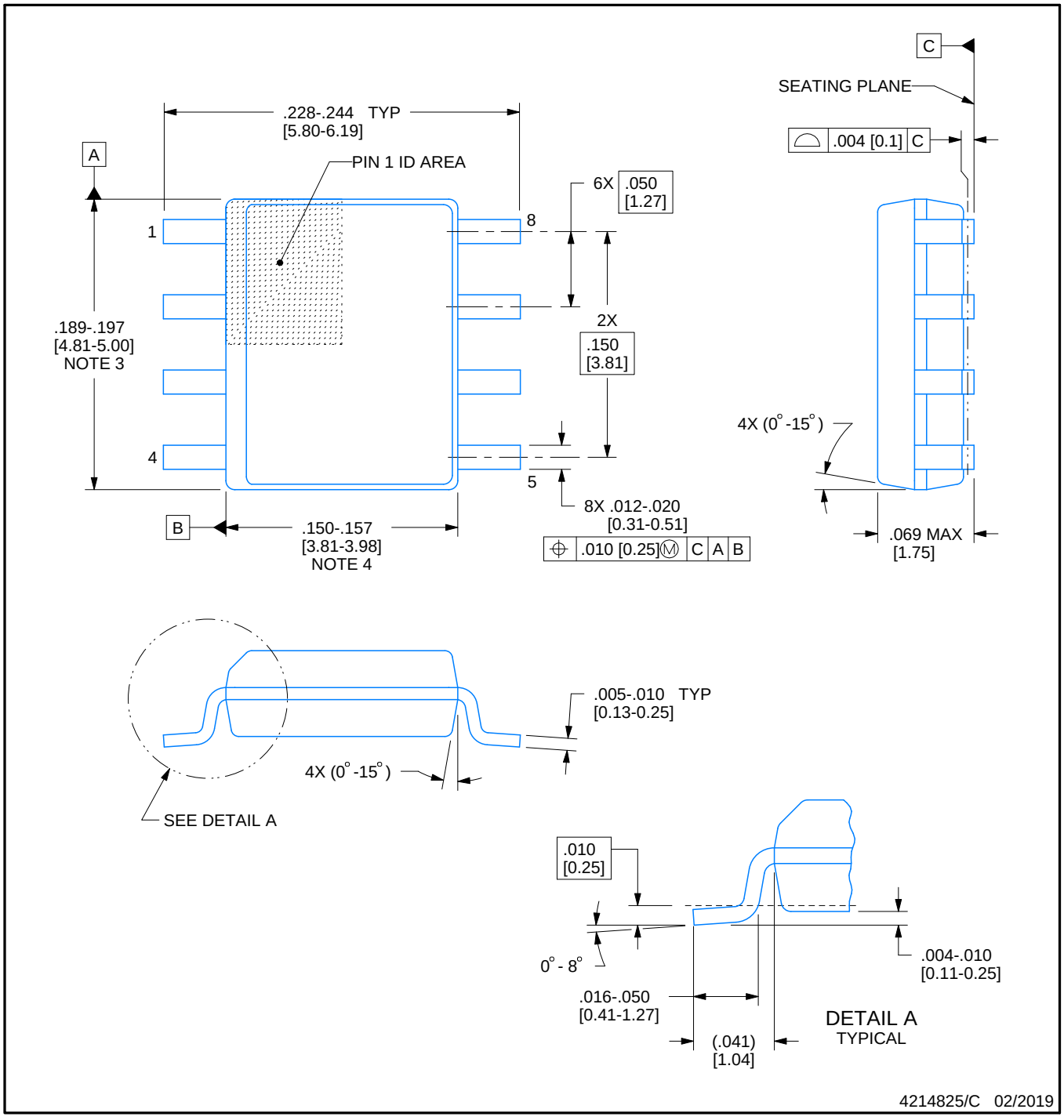

NOTES:

1. Linear dimensions are in inches [millimeters]. Dimensions in parenthesis are for reference only. Controlling dimensions are in inches. Dimensioning and tolerancing per ASME Y14.5M.
2. This drawing is subject to change without notice.
3. This dimension does not include mold flash, protrusions, or gate burrs. Mold flash, protrusions, or gate burrs shall not exceed .006 [0.15] per side.
4. This dimension does not include interlead flash.
5. Reference JEDEC registration MS-012, variation AA.

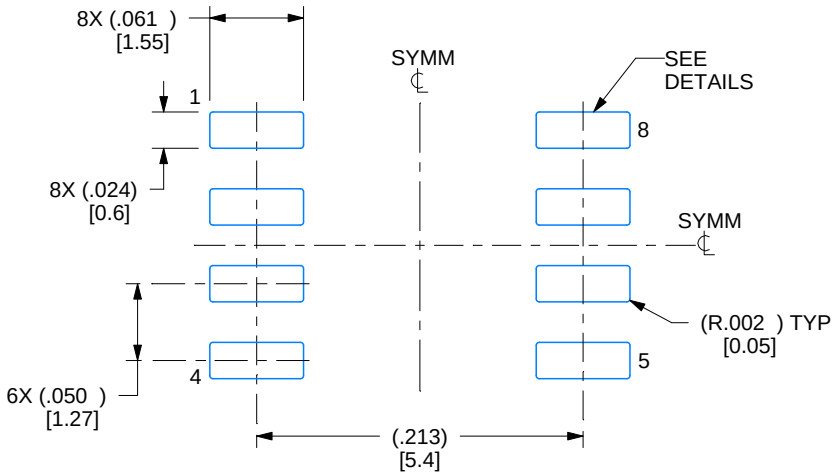

LAND PATTERN EXAMPLE
EXPOSED METAL SHOWN
SCALE:8X

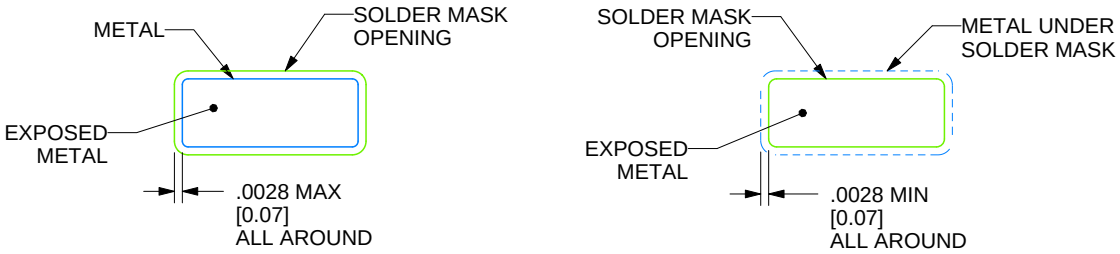

SOLDER MASK DETAILS

4214825/C 02/2019

NOTES: (continued)

6. Publication IPC-7351 may have alternate designs.
7. Solder mask tolerances between and around signal pads can vary based on board fabrication site.

EXAMPLE STENCIL DESIGN

D0008A

SOIC - 1.75 mm max height

SMALL OUTLINE INTEGRATED CIRCUIT

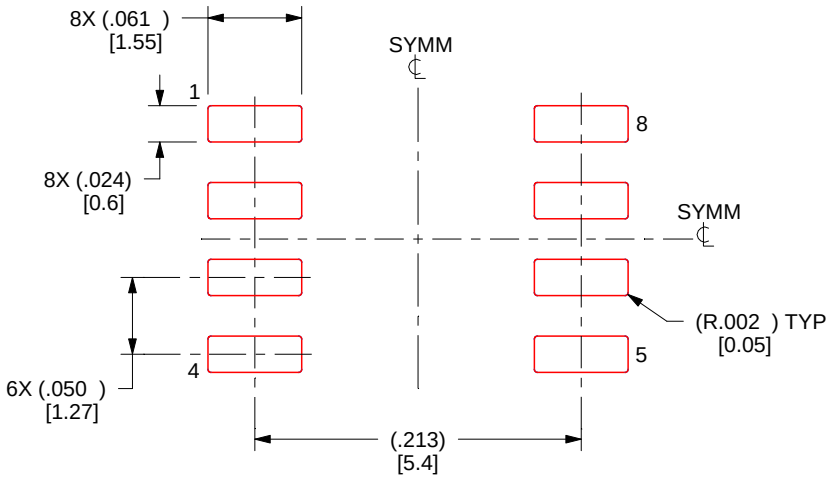

SOLDER PASTE EXAMPLE
BASED ON .005 INCH [0.125 MM] THICK STENCIL
SCALE:8X

4214825/C 02/2019

NOTES: (continued)

8. Laser cutting apertures with trapezoidal walls and rounded corners may offer better paste release. IPC-7525 may have alternate design recommendations.
9. Board assembly site may have different recommendations for stencil design.

重要なお知らせと免責事項

TI は、技術データと信頼性データ (データシートを含みます)、設計リソース (リファレンス デザインを含みます)、アプリケーションや設計に関する各種アドバイス、Web ツール、安全性情報、その他のリソースを、欠陥が存在する可能性のある「現状のまま」提供しており、商品性および特定目的に対する適合性の黙示保証、第三者の知的財産権の非侵害保証を含むいかなる保証も、明示的または黙示的にかかわらず拒否します。

これらのリソースは、TI 製品を使用する設計の経験を積んだ開発者への提供を意図したものです。(1) お客様のアプリケーションに適した TI 製品の選定、(2) お客様のアプリケーションの設計、検証、試験、(3) お客様のアプリケーションに該当する各種規格や、その他のあらゆる安全性、セキュリティ、規制、または他の要件への確実な適合に関する責任を、お客様のみが単独で負うものとします。

上記の各種リソースは、予告なく変更される可能性があります。これらのリソースは、リソースで説明されている TI 製品を使用するアプリケーションの開発の目的でのみ、TI はその使用をお客様に許諾します。これらのリソースに関して、他の目的で複製することや掲載することは禁止されています。TI や第三者の知的財産権のライセンスが付与されている訳ではありません。お客様は、これらのリソースを自身で使用した結果発生するあらゆる申し立て、損害、費用、損失、責任について、TI およびその代理人を完全に補償するものとし、TI は一切の責任を拒否します。

TI の製品は、 TI の販売条件 、 TI の総合的な品質ガイドライン 、 ti.com または TI 製品などに関連して提供される他の適用条件に従い提供されます。TI がこれらのリソースを提供することは、適用される TI の保証または他の保証の放棄の拡大や変更を意味するものではありません。 TI がカスタム、またはカスタマー仕様として明示的に指定していない限り、TI の製品は標準的なカタログに掲載される汎用機器です。

お客様がいかなる追加条項または代替条項を提案する場合も、TI はそれらに異議を唱え、拒否します。

Copyright © 2026, Texas Instruments Incorporated

最終更新日：2025 年 10 月