TEXAS INSTRUMENTS
UCC27323, UCC27324, UCC27325, UCC37323, UCC37324, UCC37325
JAJSG98K – JUNE 2001 – REVISED NOVEMBER 2023

UCCx732x デュアル 4A ピーク高速ローサイド・パワー MOSFET ドライバ

1 特長

- Bi-CMOS 出力アーキテクチャ
- ミラー・プラトー領域で±4A の駆動電流
- 低電源電圧時も定電流
- 出力の並列化により高い駆動電流を実現
- MSOP- PowerPAD™ パッケージで供給
- 電源電圧に依存しない TTL/CMOS 入力
- 業界標準のピン配置

2 アプリケーション

- スイッチ・モード電源
- DC/DC コンバータ
- ソーラー・インバータ、モーター制御、UPS

3 概要

UCC2732x および UCC3732x ファミリの高速デュアル MOSFET ドライバは、ミラー・プラトー領域で最も必要とされる場合に 4A ソース/4A シンクのピーク電流を供給して、MOSFET を効果的に駆動できます。また、独自のバイポーラおよび MOSFET の並列ハイブリッド出力段により、低い電源電圧でも高効率の電流ソースおよびシンクが可能です。反転×2、非反転×2、反転×1/非反転×1 という 3 種類の標準ロジック・オプションが用意されています。入力スレッショルドは TTL および CMOS に基づき、電源電圧に依存しません。また入力ヒステリシスが広く、ノイズ耐性に優れています。UCC2732x および UCC3732x ファミリは、標準の SOIC-8 (D) のほか、放熱特性に優れた 8 ピン PowerPAD MSOP パッケージ (DGN) で供給されるため、熱抵抗を大幅に低減して長期的な信頼性の向上を実現できます。

製品情報

デバイス(1)	主な仕様	パッケージ
UCCx732x	-40C <= 温度<= 125C 4.5V <= V_{DD}<= 15V 1.8nF 負荷時立ち上がり/立ち下がり時間 20ns/15ns 立ち上がり/立ち下がり時伝搬遅延時間 35ns/25ns	SOIC (8):4.90mm × 3.91mm
		MSOP-PowerPAD (8):3.00mm × 3.00mm

(1) 利用可能なすべてのパッケージについては、データシートの末尾にある注文情報を参照してください。

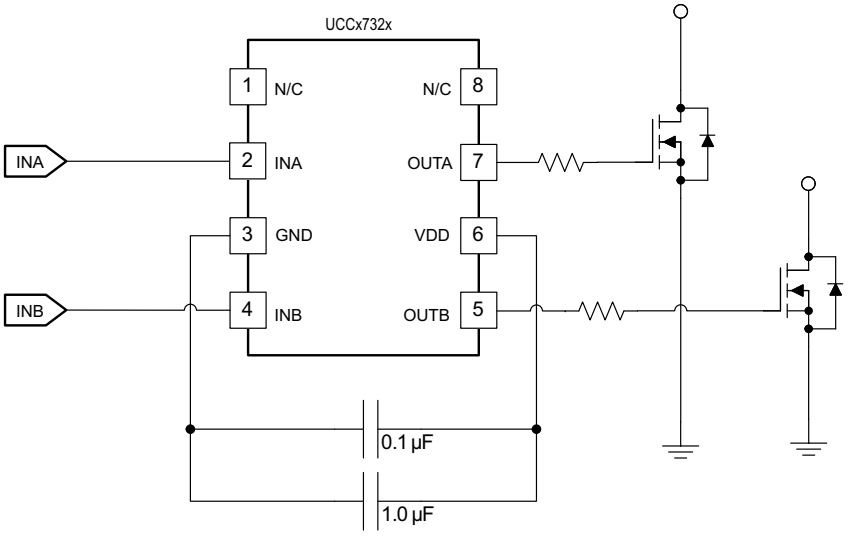

Copyright © 2016, Texas Instruments Incorporated

アプリケーション概略図

このリソースの元の言語は英語です。翻訳は概要を便宜的に提供するもので、自動化ツール (機械翻訳) を使用していることがあり、TI では翻訳の正確性および妥当性につきましては一切保証いたしません。実際の設計などの前には、ti.com で必ず最新の英語版をご参照くださいますようお願いいたします。

Table of Contents

1 特長 ... 1
2 アプリケーション ... 1
3 概要 ... 1
4 Device Comparison Table ... 3
5 Pin Configuration and Functions ... 4
6 Specifications ... 5
6.1 Absolute Maximum Ratings ... 5
6.2 ESD Ratings ... 5
6.3 Recommended Operating Conditions ... 5
6.4 Thermal Information ... 5
6.5 Electrical Characteristics ... 6
6.6 Switching Characteristics ... 6
6.7 Typical Characteristics ... 8
7 Detailed Description ... 9
7.1 Overview ... 9
7.2 Functional Block Diagram ... 9
7.3 Feature Description ... 9
7.4 Device Functional Modes ... 10
8 Application and Implementation ... 11
8.1 Application Information ... 11
8.2 Typical Application ... 12
9 Power Supply Recommendations ... 16
10 Layout ... 17
10.1 Layout Guidelines ... 17
10.2 Layout Example ... 17
10.3 Thermal Considerations ... 18
11 Device and Documentation Support ... 19
11.1 Device Support ... 19
11.2 Documentation Support ... 19
11.3 ドキュメントの更新通知を受け取る方法 ... 19
11.4 サポート・リソース ... 19
11.5 Trademarks ... 19
11.6 静電気放電に関する注意事項 ... 19
11.7 用語集 ... 19
12 Revision History ... 20
13 Mechanical, Packaging, and Orderable Information ... 20

Copyright © 2023 Texas Instruments Incorporated

4 Device Comparison Table

OUTPUT CONFIGURATION	TEMPERATURE RANGE $T_A = T_J$	PACKAGED DEVICES(1)		
		SOIC-8 (D)	MSOP-8 PowerPAD (DGN) (2)	PDIP-8 (P)
Dual inverting	–40°C to +125°C	UCC27323D	UCC27323DGN	UCC27323P
	0°C to +70°C	UCC37323D	UCC37323DGN	UCC37323P
Dual noninverting	–40°C to +125°C	UCC27324D	UCC27324DGN	UCC27324P
	0°C to +70°C	UCC37324D	UCC37324DGN	UCC37324P
One inverting, one noninverting	–40°C to +125°C	UCC27325D	UCC27325DGN	UCC27325P
	0°C to +70°C	UCC37325D	UCC37325DGN	UCC37325P

(1) D (SOIC-8) and DGN (PowerPAD-MSOP) packages are available taped and reeled. Add R suffix to device type (for example UCC27323DR, UCC27324DGNR) to order quantities of 2,500 devices per reel for D or 1,000 devices per reel for DGN package.
(2) The PowerPAD is not directly connected to any leads of the package. However, the PowerPAD is electrically and thermally connected to the substrate which is the ground of the device.

Copyright © 2023 Texas Instruments Incorporated

5 Pin Configuration and Functions

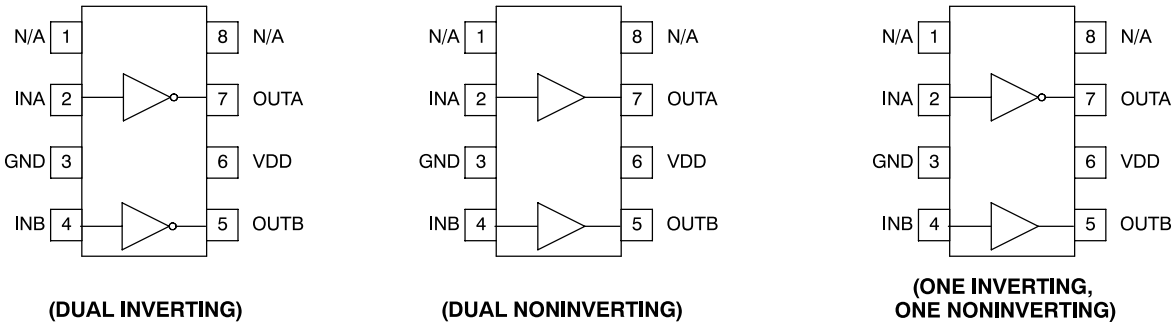

図 5-1. D, DGN Package 8-Pin SOIC, MSOP With PowerPAD Top View

表 5-1. Pin Functions

PIN		I/O	DESCRIPTION
NAME	NO.		
GND	3	—	**Common ground**: This ground should be connected very closely to the source of the power MOSFET which the driver is driving.
INA	2	I	**Input A**: Input signal of the A driver which has logic compatible threshold and hysteresis. If not used, this input must be tied to either VDD or GND; it must not be left floating.
INB	4	I	**Input B**: Input signal of the A driver which has logic compatible threshold and hysteresis. If not used, this input must be tied to either VDD or GND; it must not be left floating.
N/C	1	—	**No Internal Connection**
N/C	8	—	**No Internal Connection**
OUTA	7	O	**Driver output A**: The output stage is capable of providing 4-A drive current to the gate of a power MOSFET.
OUTB	5	O	**Driver output B**: The output stage is capable of providing 4-A drive current to the gate of a power MOSFET.
VDD	6	I	**Supply**: Supply voltage and the power input connection for this device.

Copyright © 2023 Texas Instruments Incorporated

6 Specifications

6.1 Absolute Maximum Ratings

over operating free-air temperature range (unless otherwise noted)(1) (2)

			MIN	MAX	UNIT
	Analog input voltage (INA, INB)		–0.3 to V_{DD} + 0.3 V	not to exceed 16	V
	Output body diode DC current (OUTA, OUTB)			0.2	A
I_{OUT_DC}	Output current (OUTA, OUTB)	DC		0.2	
I_{OUT_PULSED}		Pulsed (0.5 µs)		4.5	
	Output voltage (OUTA, OUTB)			16	V
V_{DD}	Supply voltage		–0.3	16	V
T_J	Junction operating temperature		–55	150	°C
T_{stg}	Storage temperature		–65	150	

(1) Stresses beyond those listed under *Absolute Maximum Ratings* may cause permanent damage to the device. These are stress ratings only, which do not imply functional operation of the device at these or any other conditions beyond those indicated under *Recommended Operating Conditions*. Exposure to absolute-maximum-rated conditions for extended periods may affect device reliability.
(2) All voltages are with respect to GND. Currents are positive into, negative out of the specified terminal.

6.2 ESD Ratings

			VALUE	UNIT
$V_{(ESD)}$	Electrostatic discharge	Human-body model (HBM), per ANSI/ESDA/JEDEC JS-001(1)	2000	V
		Charged-device model (CDM), per JEDEC specification JESD22-C101(2)	1000	

(1) JEDEC document JEP155 states that 500-V HBM allows safe manufacturing with a standard ESD control process.
(2) JEDEC document JEP157 states that 250-V CDM allows safe manufacturing with a standard ESD control process.

6.3 Recommended Operating Conditions

over operating free-air temperature range (unless otherwise noted)

		MIN	NOM	MAX	UNIT
	Supply voltage	4.5		15	V
	Input voltage	0		15	V
	Operating junction temperature, UCC2732x	–40		125	°C
	Operating junction temperature, UCC3732x	0		70	°C

6.4 Thermal Information

THERMAL METRIC(1)		UCCx732x			UNIT
		D (SOIC)	DGN (MSOP With PowerPAD)	P (PDIP)	
		8 PINS	8 PINS	8 PINS	
$R_{\theta JA}$	Junction-to-ambient thermal resistance	107.3	56.6	55.5	°C/W
$R_{\theta JC(top)}$	Junction-to-case (top) thermal resistance	52.2	52.8	45.3	°C/W
$R_{\theta JB}$	Junction-to-board thermal resistance	47.3	32.6	32.6	°C/W
ψ_{JT}	Junction-to-top characterization parameter	10.2	1.8	23	°C/W
ψ_{JB}	Junction-to-board characterization parameter	46.8	32.3	32.5	°C/W
$R_{\theta JC(bot)}$	Junction-to-case (bottom) thermal resistance	N/A	5.9	N/A	°C/W

(1) For more information about traditional and new thermal metrics, see the *Semiconductor and IC Package Thermal Metrics* application report.

Copyright © 2023 Texas Instruments Incorporated

6.5 Electrical Characteristics

V_{DD} = 4.5 to 15 V, $T_A = T_J$ (unless otherwise noted)

PARAMETER			TEST CONDITIONS	MIN	TYP	MAX	UNIT
INPUT (INA, INB)							
V_{IN_H}	Logic 1 input threshold			1.6	2.2	2.5	V
V_{IN_L}	Logic 0 input threshold			0.8	1.2	1.5	V
	Input current		0 V ← V_{IN} ← V_{DD}	–10		10	µA
OUTPUT (OUTA, OUTB)							
	Output current		V_{DD} = 14 V(1)		4		A
R_{OH}	Output resistance high		I_{OUT} = –10 mA, (2)		0.6	1.5	Ω
R_{OL}	Output resistance low		I_{OUT} = 10 mA, (2)		0.4	1	Ω
OVERALL							
I_{DD}	Static Operating Current	UCCx7323	INA = 0 V, INB = 0 V		300	450	µA
			INA = 0 V, INB = HIGH		300	450	
			INA = HIGH, INB = 0 V		300	450	
			INA = HIGH, INB = HIGH		300	450	
		UCCx7324	INA = 0 V, INB = 0 V		2	50	
			INA = 0 V, INB = HIGH		300	450	
			INA = HIGH, INB = 0 V		300	450	
			INA = HIGH, INB = HIGH		600	750	
		UCCx7325	INA = 0 V, INB = 0 V		150	300	
			INA = 0 V, INB = HIGH		450	600	
			INA = HIGH, INB = 0 V		150	300	
			INA = HIGH, INB = HIGH		450	600	

(1) Parameter not tested in production
(2) Output pullup resistance is a DC measurement that measures resistance of PMOS structure only, not N-channel structure.

6.6 Switching Characteristics

over operating free-air temperature range (unless otherwise noted)

PARAMETER		TEST CONDITIONS	MIN	TYP	MAX	UNIT
T_R	Rise time (OUTA, OUTB)	C_{LOAD} = 1.8 nF, see 図 6-1		20	40	ns
T_F	Fall time (OUTA, OUTB)	C_{LOAD} = 1.8 nF, see 図 6-1		15	40	ns
T_{D1}	Delay, IN rising (IN to OUT)	C_{LOAD} = 1.8 nF, see 図 6-1		25	40	ns
T_{D2}	Delay, IN falling (IN to OUT)	C_{LOAD} = 1.8 nF, see 図 6-1		35	35	ns

Copyright © 2023 Texas Instruments Incorporated

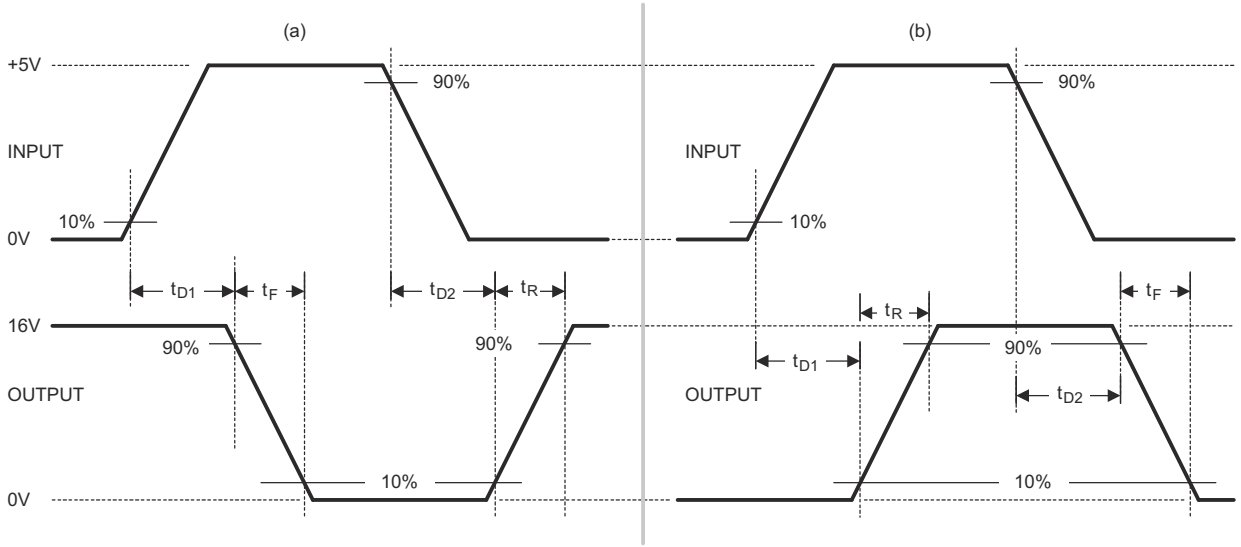

図 6-1. Switching Waveforms for (a) Inverting Driver and (b) Noninverting Driver

6.7 Typical Characteristics

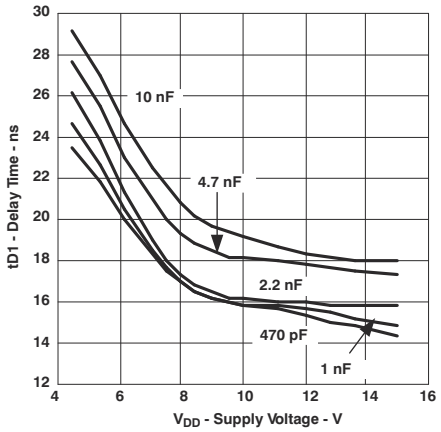

図 6-2. Delay Time (t_{D1}) vs Supply Voltage

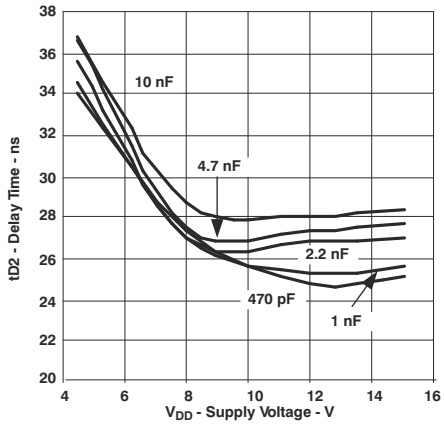

図 6-3. Delay Time (t_{D2}) vs Supply Voltage

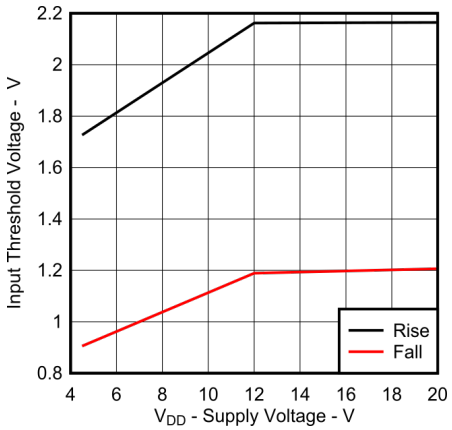

図 6-4. Input Threshold vs Supply Voltage

Copyright © 2023 Texas Instruments Incorporated

7 Detailed Description

7.1 Overview

The UCC2732x and UCC3732x family of high-speed dual MOSFET drivers can deliver large peak currents into capacitive loads. Three standard logic options are offered – dual-inverting, dual-noninverting and one-inverting and one-noninverting driver. Using a design that inherently minimizes shoot-through current, these drivers deliver 4A of current where it is needed most at the Miller plateau region during the MOSFET switching transition. A unique Bipolar and MOSFET hybrid output stage in parallel also allows efficient current sourcing and sinking at low supply voltages.

7.2 Functional Block Diagram

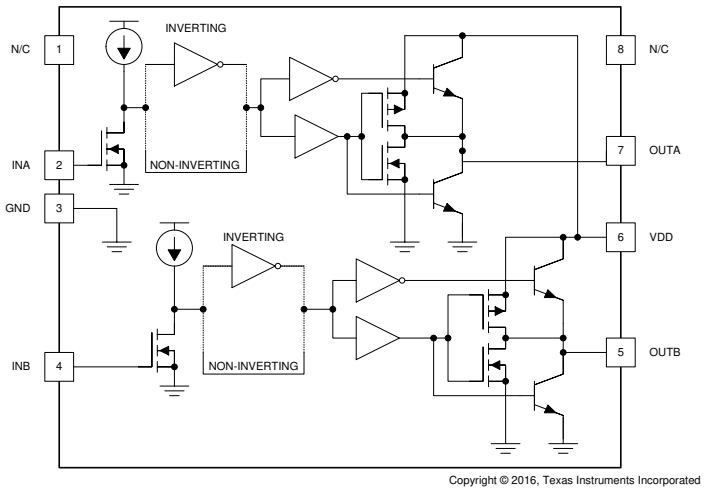

Copyright © 2016, Texas Instruments Incorporated

7.3 Feature Description

7.3.1 Input Stage

The input thresholds have a 3.3-V logic sensitivity over the full range of V_{DD} voltage; yet it is equally compatible with 0 V to V_{DD} signals.

The inputs of UCC2732x and UCC3732x family of drivers are designed to withstand 500-mA reverse current without either damage to the IC for logic upset. The input stage of each driver must be driven by a signal with a short rise or fall time. This condition is satisfied in typical power-supply applications, where the input signals are provided by a PWM controller or logic gates with fast transition times (<200 ns). The input stages to the drivers function as a digital gate, and are not intended for applications where a slow-changing input voltage is used to generate a switching output when the logic threshold of the input section is reached. While this may not be harmful to the driver, the output of the driver may switch repeatedly at a high frequency.

Users should not attempt to shape the input signals to the driver in an attempt to slow down (or delay) the signal at the output. If limited rise or fall times to the power device is desired, an external resistance can be added between the output of the driver and the load device, which is generally a power MOSFET gate. The external resistor may also help remove power dissipation from the device package, as discussed in (see *セクション 10.3*).

Importantly, input signal of the two channels, INA and INB, which has logic compatible threshold and hysteresis. If not used, INA and INB must be tied to either VDD or GND; it must not be left floating.

7.3.2 Output Stage

Inverting outputs of the UCCx7323 and OUTA of the UCCx7325 are intended to drive external P-channel MOSFETs. Noninverting outputs of the UCCx7324 and OUTB of the UCCx7325 are intended to drive external N-Channel MOSFETs.

Each output stage is capable of supplying ±4-A peak current pulses and swings to both VDD and GND. The pullup and pulldown circuits of the driver are constructed of bipolar and MOSFET transistors in parallel. The

peak output current rating is the combined current from the bipolar and MOSFET transistors. The output resistance is the $R_{DS(on)}$ of the MOSFET transistor when the voltage on the driver output is less than the saturation voltage of the bipolar transistor. Each output stage also provides a very low impedance to overshoot and undershoot due to the body diode of the external MOSFET.

This means that in many cases, external-Schottky-clamp diodes are not required. The UCCx732x family delivers 4 A of gate drive where it is most needed during the MOSFET switching transition – at the Miller plateau region – providing improved efficiency gains. A unique Bipolar and MOSFET hybrid output stage in parallel also allows efficient current sourcing at low supply voltages.

7.4 Device Functional Modes

With VDD power supply in the range of 4.5 V to 15 V, the output stage is dependent on the states of the HI and LI pins. 表 7-1 shows the UCCx732x truth table.

表 7-1. Input and Output Table

INPUTS (VIN_L, VIN_H)		UCC37323x		UCC37324x		UCC37325x	
INA	INB	OUTA	OUTB	OUTA	OUTB	OUTA	OUTB
L	L	H	H	L	L	H	L
L	H	H	L	L	H	H	H
H	L	L	H	H	L	L	L
H	H	L	L	H	H	L	H

Importantly, if INA and INB are not used, they must be tied to either VDD or GND; it must not be left floating.

Copyright © 2023 Texas Instruments Incorporated

8 Application and Implementation

注

以下のアプリケーション情報は、TI の製品仕様に含まれるものではなく、TI ではその正確性または完全性を保証いたしません。個々の目的に対する製品の適合性については、お客様の責任で判断していただくことになります。お客様は自身の設計実装を検証しテストすることで、システムの機能を確認する必要があります。

8.1 Application Information

High-frequency power supplies often require high-speed, high-current drivers such as the UCCx732x family. A leading application is the needed to provide a high-power buffer stage between the PWM output of the control IC and the gates of the primary power MOSFET or IGBT switching devices. In other cases, the driver IC is used to drive the power-device gates through a drive transformer. Synchronous rectification supplies are also needed to simultaneously drive multiple devices which presents an extremely large load to the control circuitry.

Driver ICs are used when having the primary PWM regulator IC directly drive the switching devices for one or more reasons is not feasible. The PWMIC does not have the brute drive capability required for the intended switching MOSFET, limiting the switching performance in the application. In other cases there may be a desire to minimize the effect of high-frequency switching noise by placing the high current driver physically close to the load. Also, newer ICs that target the highest operating frequencies do not incorporate onboard gate drivers at all. Their PWM outputs are only intended to drive the high impedance input to a driver such as the UCCx732x. Finally, the control IC is under thermal stress due to power dissipation, and an external driver helps by moving the heat from the controller to an external package.

Copyright © 2023 Texas Instruments Incorporated

8.2 Typical Application

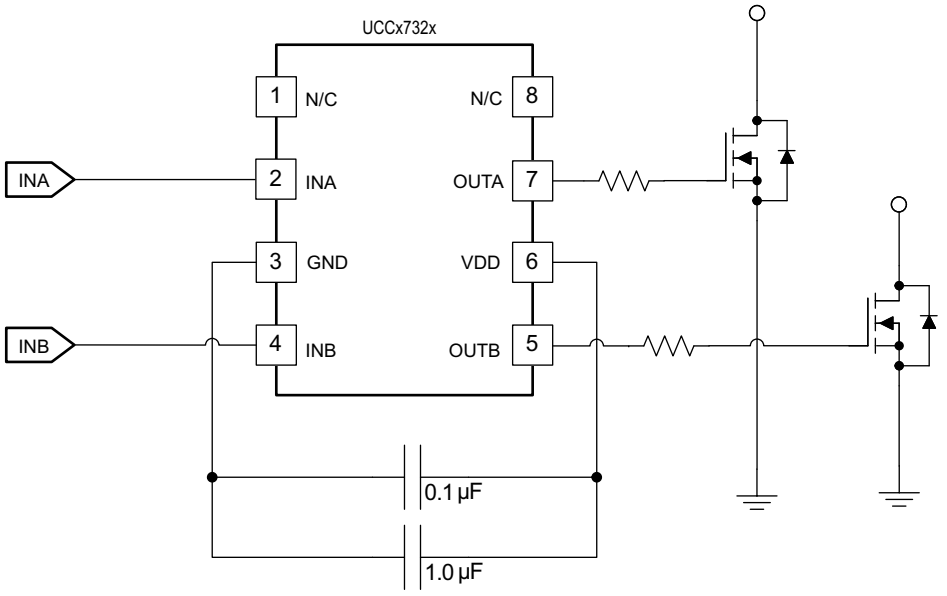

Copyright © 2016, Texas Instruments Incorporated

図 8-1. UCCx732x Driving Two Independent MOSFETs

8.2.1 Design Requirements

To select proper device from UCCx732x family, TI recommends first checking the appropriate logic for the outputs. UCCx7323 has dual inverting outputs; UCCx7324 has dual noninverting outputs; UCCx7325 have inverting channel A and noninverting channel B. Moreover, some design considerations must be evaluated first in order to make the most appropriate selection. Among these considerations are VDD, drive current, and power dissipation.

8.2.2 Detailed Design Procedure

8.2.2.1 Source/Sink Capabilities During Miller Plateau

Large power MOSFETs present a large load to the control circuitry. Proper drive is required for efficient, reliable operation. The UCCx732x drivers have been optimized to provide maximum drive to a power MOSFET during the Miller plateau region of the switching transition. This interval occurs while the drain voltage is swinging between the voltage levels dictated by the power topology, requiring the charging/discharging of the drain-gate capacitance with current supplied or removed by the driver device [1].

Two circuits are used to test the current capabilities of the UCCx732x driver. In each case external circuitry is added to clamp the output near 5 V while the IC is sinking or sourcing current. An input pulse of 250 ns is applied at a frequency of 1 kHz in the proper polarity for the respective test. In each test there is a transient period where the current peaked up and then settled down to a steady-state value. The noted current measurements are made at a time of 200 ns after the input pulse is applied, after the initial transient. [1]

The first circuit in 図 8-2 is used to verify the current sink capability when the output of the driver is clamped around 5 V, a typical value of gate-source voltage during the Miller plateau region. The UCCx7323 is found to sink 4.5 A at VDD = 15 V and 4.28 A at VDD = 12 V.

Copyright © 2023 Texas Instruments Incorporated

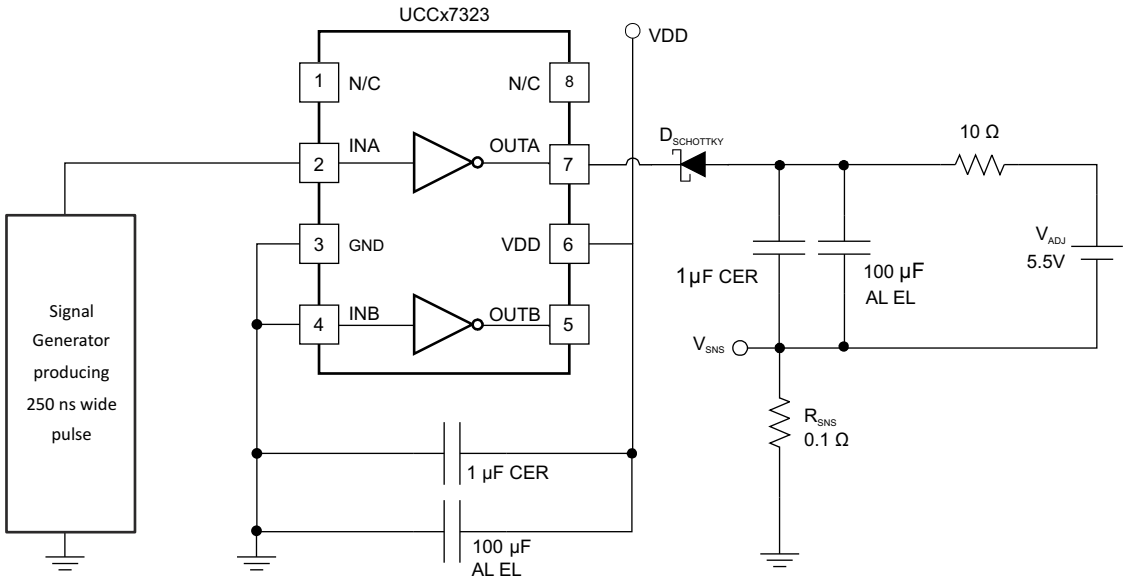

Copyright © 2016, Texas Instruments Incorporated

図 8-2. Current Sink Capability Test

The circuit shown in 図 8-3 is used to test the current source capability with the output clamped to around 5 V with a string of Zener diodes. The UCCx7323 is found to source 4.8 A at VDD = 15 V and 3.7 A at VDD = 12 V.

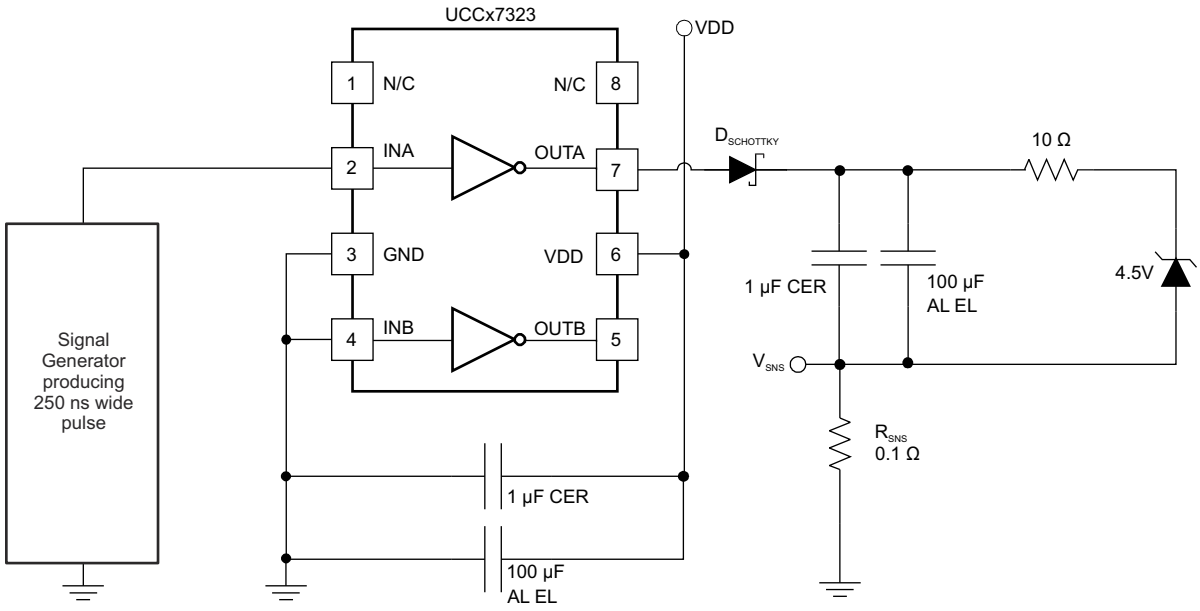

Copywright © 2016, Texas Instruments Incorporated

図 8-3. Current Source Capability Test

8.2.2.2 Parallel Outputs

The A and B drivers may be combined into a single driver by connecting the INA/INB inputs together as close to the IC as possible, and the OUTA/OUTB outputs ties together if the external gate drive resistor is not used. In some cases where the external gate drive resistor is used, Ti recommends that the resistor can be equally split in OUTA and OUTB respectively to reduce the parasitic inductance induce unbalance between two channels, as show in 図 8-4.

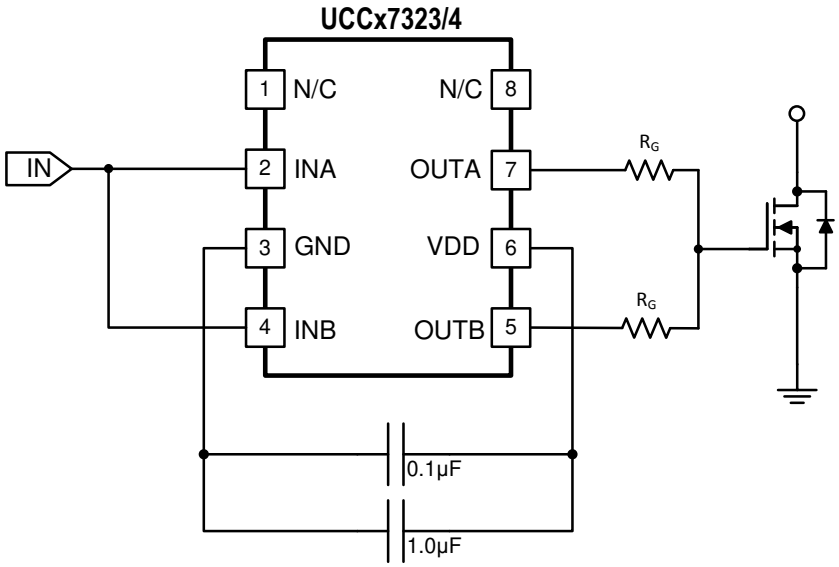

図 8-4. Parallel Operation of UCCx7323 and UCCx7324

Important consideration about paralleling two channels for UCCx7323/4 include: 1) INA and INB should be shorted in PCB layout as close to the device as possible, as well as for OUTA and OUTB, in which condition PCB layout parasitic mismatching between two channels could be minimized. 2) INA/B input slope signal should be fast enough to avoid mismatched V_{IN_H}/V_{IN_L}, t_{d1}/t_{d2} between channel-A and channel-B. TI recommends having input signal slope faster than 20 V/us.

8.2.2.3 VDD

Although quiescent VDD current is very low, total supply current will be higher, depending on OUTA and OUTB current and the programmed oscillator frequency. Total VDD current is the sum of quiescent VDD current and the average OUT current. Knowing the operating frequency and the MOSFET gate charge (Q_g), average OUT current can be calculated using 式 1.

$$I_{OUT} = Q_g \times f \tag{1}$$

where

- f is frequency

For the best high-speed circuit performance, two VDD bypass capacitors are recommended to prevent noise problems. The use of surface mount components is highly recommended. A 0.1-µF ceramic capacitor should be located closest to the VDD to ground connection. In addition, a larger capacitor (such as 1 µF and above) with relatively low ESR should be connected in parallel, to help deliver the high current peaks to the load. The parallel combination of capacitors should present a low impedance characteristic for the expected current levels in the driver application.

8.2.2.4 Driver Current and Power Requirements

The UCCx732x family of drivers is capable of delivering 4 A of current to a MOSFET gate for a period of tens of nanoseconds. High peak current is required to turn the device ON quickly. Then, to turn the device OFF, the driver is required to sink a similar amount of current to ground. This repeats at the operating frequency of the power device. A MOSFET is used in this discussion because it is the most common type of switching device used in high-frequency power conversion equipment.

Reference [1] and reference [2] discuss the current required to drive a power MOSFET and other capacitive-input switching devices. Reference [2] includes information on the previous generation of bipolar IC gate drivers.

Copyright © 2023 Texas Instruments Incorporated

When a driver IC is tested with a discrete, capacitive load, it is a fairly simple matter to calculate the power that is required from the bias supply. The energy that must be transferred from the bias supply to charge the capacitor is given by 式 2.

$$E = ½CV^2 \quad (2)$$

where

- C is the load capacitor
- V is the bias voltage feeding the driver

There is an equal amount of energy transferred to ground when the capacitor is discharged. This leads to a power loss given by 式 3.

$$P = CV^2 \times f \quad (3)$$

where

- f is the switching frequency

This power is dissipated in the resistive elements of the circuit. Thus, with no external resistor between the driver and gate, this power is dissipated inside the driver. Half of the total power is dissipated when the capacitor is charged, and the other half is dissipated when the capacitor is discharged. An actual example using the conditions of the previous gate drive waveform should help clarify this.

With V_{DD} = 12 V, C_{LOAD} = 10 nF, and f = 300 kHz, the power loss can be calculated as 式 4.

$$P = 10\ nF \times (12\ V)^2 \times (300\ kHz) = 0.432\ W \quad (4)$$

With a 12-V supply, this equates to a current of (see 式 5):

$$I = P/V = 0.432\ W / 12\ V = 36\ mA \quad (5)$$

The actual current measured from the supply was 0.037 A, and is very close to the predicted value. But, the I_{DD} current that is due to the IC internal consumption should be considered. With no load the IC current draw is 0.0027 A. Under this condition the output rise and fall times are faster than with a load. This could lead to an almost insignificant, yet measurable current due to cross-conduction in the output stages of the driver. However, these small current differences are buried in the high frequency switching spikes, and are beyond the measurement capabilities of a basic lab setup. The measured current with 10-nF load is reasonably close to that expected.

The switching load presented by a power MOSFET can be converted to an equivalent capacitance by examining the gate charge required to switch the device. This gate charge includes the effects of the input capacitance plus the added charge needed to swing the drain of the device between the ON and OFF states. Most manufacturers provide specifications that provide the typical and maximum gate charge, in nC, to switch the device under specified conditions. Using the gate charge Q_g, one can determine the power that must be dissipated when charging a capacitor. This is done by using the equivalence $Q_g = C_{eff} \times V$ to provide 式 6 for power:

$$P = C \times V^2 \times f = V \times Q_g \times f \quad (6)$$

式 6 allows a power designer to calculate the bias power required to drive a specific MOSFET gate at a specific bias voltage and a specific switching frequency.

8.2.3 Application Curves

図 8-5 shows the circuit performance achievable with a single driver (half of the 8-pin IC) driving a 10-nF load. The input pulse width (not shown) is set to 300 ns to show both transitions in the output waveform. Note the

Copyright © 2023 Texas Instruments Incorporated

linear rise and fall edges of the switching waveforms which is due to the constant output current characteristic of the driver as opposed to the resistive output impedance of traditional MOSFET-based gate drivers.

Sink and source currents of the driver are dependent upon the VDD value and the output capacitive load. The larger the VDD value, the higher the current capability; also, the larger the capacitive load, the higher the current sink and source capability.

Trace resistance and inductance, including wires and cables for testing, slows down the rise and fall times of the outputs; thus reducing the current capabilities of the driver.

To achieve higher current results, reduce resistance and inductance on the board as much as possible and increase the capacitive load value in order to swamp out the effect of inductance values.

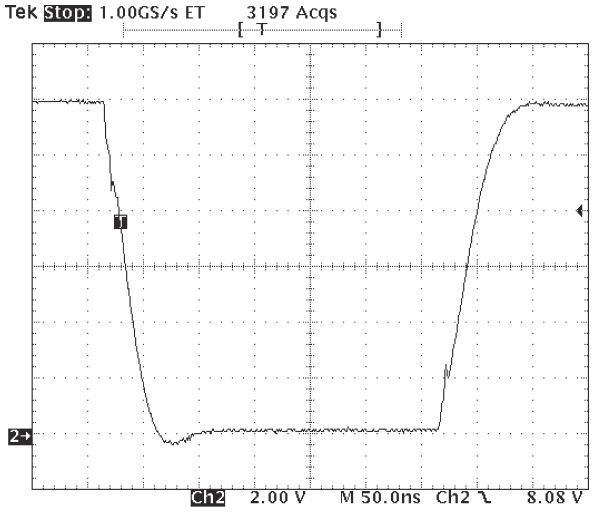

C_L = 10 nF, C_L = 10 nF, VDD = 12 V

図 8-5. Rising and Falling Time of UCCx732x

9 Power Supply Recommendations

The recommended bias supply voltage range for UCCx732x is from 4.5 V to 15 V. The upper end of this range is driven by the 16 V absolute maximum voltage rating of the VDD. TI recommends keeping proper margin to allow for transient voltage spikes.

A local bypass capacitor must be placed between the VDD and GND pins. And this capacitor must be placed as close to the device as possible. A low ESR, ceramic surface mount capacitor is recommended. TI recommends using 2 capacitors across VDD and GND: a 100-nF ceramic surface-mount capacitor for high frequency filtering placed very close to VDD and GND pin, and another surface-mount capacitor, 220 nF to 10 µF, for IC bias requirements.

Copyright © 2023 Texas Instruments Incorporated

10 Layout

10.1 Layout Guidelines

Optimum performance of high and low-side gate drivers cannot be achieved without taking due considerations during circuit board layout. The following points are emphasized:

1) Low ESR/ESL capacitors must be connected close to the IC between VDD and GND pins to support high peak currents drawn from VDD during the turn-on of the external MOSFETs.

2) Grounding considerations:

- The first priority in designing grounding connections is to confine the high peak currents that charge and discharge the MOSFET gates to a minimal physical area. This will decrease the loop inductance and minimize noise issues on the gate terminals of the MOSFETs. The gate driver must be placed as close as possible to the MOSFETs.
- Star-point grounding is a good way to minimize noise coupling from one current loop to another. The GND of the driver is connected to the other circuit nodes such as source of power MOSFET and ground of PWM controller at one, single point. The connected paths must be as short as possible to reduce inductance and be as wide as possible to reduce resistance.
- Use a ground plane to provide noise shielding. Fast rise and fall times at OUT may corrupt the input signals during transition. The ground plane must not be a conduction path for any current loop. Instead the ground plane must be connected to the star-point with one single trace to establish the ground potential. In addition to noise shielding, the ground plane can help in power dissipation as well.

3) In noisy environments, tying inputs of an unused channel of the UCC2742x device to VDD or GND using short traces in order to ensure that the output is enabled and to prevent noise from causing malfunction in the output may be necessary.

4) Separate power traces and signal traces, such as output and input signals.

10.2 Layout Example

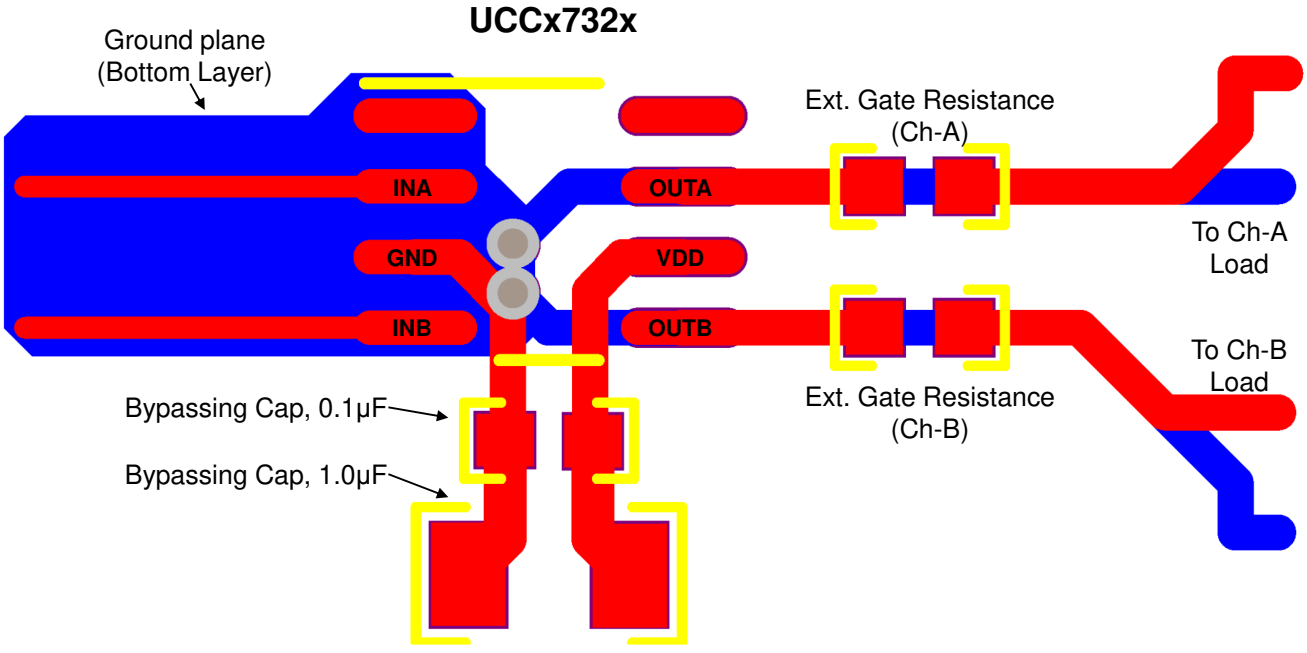

図 10-1. Recommended PCB Layout for UCCx732x

10.3 Thermal Considerations

The useful range of a driver is greatly affected by the drive power requirements of the load and the thermal characteristics of the IC package. In order for a power driver to be useful over a particular temperature range, the package must allow for the efficient removal of the heat produced while keeping the junction temperature within rated limits. The UCCx732x family of drivers is available in three different packages to cover a range of application requirements.

The MSOP PowerPAD-8 (DGN) package significantly relieves this concern by offering an effective means of removing the heat from the semiconductor junction. As illustrated in reference [3], the PowerPAD packages offer a lead-frame die pad that is exposed at the base of the package. This pad is soldered to the copper on the PC board directly underneath the IC package, reducing the θ_{JC} down to 4.7°C/W. Data is presented in reference [3] to show that the power dissipation can be quadrupled in the PowerPAD configuration when compared to the standard packages. The PC board must be designed with thermal lands and thermal vias to complete the heat removal subsystem, as summarized in reference [4]. This design allows a significant improvement in heat sinking over that which is available in the D or P packages, and is shown to more than double the power capability of the D and P packages.

注

The PowerPAD is not directly connected to any leads of the package. However, the PowerPad is electrically and thermally connected to the substrate which is the ground of the device.

Copyright © 2023 Texas Instruments Incorporated

11 Device and Documentation Support

11.1 Device Support

11.1.1 サード・パーティ製品に関する免責事項

サード・パーティ製品またはサービスに関するテキサス・インスツルメンツの出版物は、単独またはテキサス・インスツルメンツの製品、サービスと一緒に提供される場合に関係なく、サード・パーティ製品またはサービスの適合性に関する是認、サード・パーティ製品またはサービスの是認の表明を意味するものではありません。

11.2 Documentation Support

11.2.1 Related Documentation

See the following for related documentation:

1. Power Supply Seminar SEM-1400 Topic 2, *Design And Application Guide For High Speed MOSFET Gate Drive Circuits* (SLUP133)
2. *Practical Considerations in High Performance MOSFET, IGBT and MCT Gate Drive Circuits* (SLUA105)
3. *PowerPad Thermally Enhanced Package* (SLMA002)
4. *PowerPAD Made Easy* (SLMA004)

11.3 ドキュメントの更新通知を受け取る方法

ドキュメントの更新についての通知を受け取るには、www.tij.co.jp のデバイス製品フォルダを開いてください。[通知] をクリックして登録すると、変更されたすべての製品情報に関するダイジェストを毎週受け取ることができます。 変更の詳細については、改訂されたドキュメントに含まれている改訂履歴をご覧ください。

11.4 サポート・リソース

テキサス・インスツルメンツ E2E™ サポート・フォーラムは、エンジニアが検証済みの回答と設計に関するヒントをエキスパートから迅速かつ直接得ることができる場所です。既存の回答を検索したり、独自の質問をしたりすることで、設計で必要な支援を迅速に得ることができます。

リンクされているコンテンツは、各寄稿者により「現状のまま」提供されるものです。これらはテキサス・インスツルメンツの仕様を構成するものではなく、必ずしもテキサス・インスツルメンツの見解を反映したものではありません。テキサス・インスツルメンツの使用条件を参照してください。

11.5 Trademarks

PowerPAD™ is a trademark of Texas Instruments.
テキサス・インスツルメンツ E2E™ is a trademark of Texas Instruments.
すべての商標は、それぞれの所有者に帰属します。

11.6 静電気放電に関する注意事項



この IC は、ESD によって破損する可能性があります。テキサス・インスツルメンツは、IC を取り扱う際には常に適切な注意を払うことを推奨します。正しい取り扱いおよび設置手順に従わない場合、デバイスを破損するおそれがあります。

ESD による破損は、わずかな性能低下からデバイスの完全な故障まで多岐にわたります。精密な IC の場合、パラメータがわずかに変化するだけで公表されている仕様から外れる可能性があるため、破損が発生しやすくなっています。

11.7 用語集

テキサス・インスツルメンツ用語集　　この用語集には、用語や略語の一覧および定義が記載されています。

Copyright © 2023 Texas Instruments Incorporated

12 Revision History

資料番号末尾の英字は改訂を表しています。その改訂履歴は英語版に準じています。

Changes from Revision J (September 2018) to Revision K (November 2023) **Page**

- Changed ESD HBM value from 4000 V to 2000 V in ESD Ratings 5
- Changed input threshold voltage values, deleted V_{OH} output high level and V_{OL} output low level, changed output resistance high and output resistance low values in Electrical Characteristics 6
- Changed 図 6-4 8

Changes from Revision I (July 2016) to Revision J (September 2018) **Page**

- Changed NC description from "No connection: must be grounded" to "No Internal Connection" 4

Changes from Revision H (May 2013) to Revision I (July 2016) **Page**

- 「ESD 定格」表、「機能説明」セクション、「デバイスの機能モード」セクション、「アプリケーションと実装」セクション、「電源に関する推奨事項」セクション、「レイアウト」セクション、「デバイスおよびドキュメントのサポート」セクション、「メカニカル、パッケージ、および注文情報」セクションを追加。 1
- Deleted Power Dissipation rows from *Absolute Maximum Ratings* 5

Changes from Revision G (March 2010) to Revision H (May 2013) **Page**

- Changed $D_{SCHOTTKY}$ diode direction and voltage of zener diode from 5.5 to 4.5 V in 図 8-3 12
- Added three paragraphs after first paragraph of *Operational Waveforms and Circuit Layout* section before 図 8-5 15

13 Mechanical, Packaging, and Orderable Information

The following pages include mechanical, packaging, and orderable information. This information is the most current data available for the designated devices. This data is subject to change without notice and revision of this document. For browser-based versions of this data sheet, refer to the left-hand navigation.

Copyright © 2023 Texas Instruments Incorporated

PACKAGING INFORMATION

Orderable part number	Status (1)	Material type (2)	Package | Pins	Package qty | Carrier	RoHS (3)	Lead finish/ Ball material (4)	MSL rating/ Peak reflow (5)	Op temp (°C)	Part marking (6)
UCC27323D	Obsolete	Production	SOIC (D) | 8	-	-	Call TI	Call TI	-40 to 125	27323
UCC27323DGN	Obsolete	Production	HVSSOP (DGN) | 8	-	-	Call TI	Call TI	-40 to 125	27323
UCC27323DGNR	Active	Production	HVSSOP (DGN) | 8	2500 | LARGE T&R	Yes	NIPDAU	Level-1-260C-UNLIM	-40 to 125	27323
UCC27323DGNR.A	Active	Production	HVSSOP (DGN) | 8	2500 | LARGE T&R	Yes	NIPDAU	Level-1-260C-UNLIM	-40 to 125	27323
UCC27323DR	Active	Production	SOIC (D) | 8	2500 | LARGE T&R	-	NIPDAU	Level-1-260C-UNLIM	-40 to 125	27323
UCC27323DR.A	Active	Production	SOIC (D) | 8	2500 | LARGE T&R	-	NIPDAU	Level-1-260C-UNLIM	-40 to 125	27323
UCC27323P	NRND	Production	PDIP (P) | 8	50 | TUBE	Yes	NIPDAU	N/A for Pkg Type	-40 to 125	UCC27323P
UCC27323P.A	NRND	Production	PDIP (P) | 8	50 | TUBE	Yes	NIPDAU	N/A for Pkg Type	-40 to 125	UCC27323P
UCC27324D	Obsolete	Production	SOIC (D) | 8	-	-	Call TI	Call TI	-40 to 125	27324
UCC27324DGN	Obsolete	Production	HVSSOP (DGN) | 8	-	-	Call TI	Call TI	-40 to 125	27324
UCC27324DGNR	Active	Production	HVSSOP (DGN) | 8	2500 | LARGE T&R	Yes	NIPDAU	Level-1-260C-UNLIM	-40 to 125	27324
UCC27324DGNR.A	Active	Production	HVSSOP (DGN) | 8	2500 | LARGE T&R	Yes	NIPDAU	Level-1-260C-UNLIM	-40 to 125	27324
UCC27324DGNRG4	Active	Production	HVSSOP (DGN) | 8	2500 | LARGE T&R	Yes	NIPDAU	Level-1-260C-UNLIM	-40 to 125	27324
UCC27324DR	Active	Production	SOIC (D) | 8	2500 | LARGE T&R	Yes	NIPDAU	Level-1-260C-UNLIM	-40 to 125	27324
UCC27324DR.A	Active	Production	SOIC (D) | 8	2500 | LARGE T&R	Yes	NIPDAU	Level-1-260C-UNLIM	-40 to 125	27324
UCC27324DRG4	Active	Production	SOIC (D) | 8	2500 | LARGE T&R	Yes	NIPDAU	Level-1-260C-UNLIM	-40 to 125	27324
UCC27324P	NRND	Production	PDIP (P) | 8	50 | TUBE	Yes	NIPDAU	N/A for Pkg Type	-40 to 125	UCC27324P
UCC27324P.A	NRND	Production	PDIP (P) | 8	50 | TUBE	Yes	NIPDAU	N/A for Pkg Type	-40 to 125	UCC27324P
UCC27324PE4	NRND	Production	PDIP (P) | 8	50 | TUBE	Yes	NIPDAU	N/A for Pkg Type	-40 to 125	UCC27324P
UCC27325D	Obsolete	Production	SOIC (D) | 8	-	-	Call TI	Call TI	-40 to 125	27325
UCC27325DGN	Obsolete	Production	HVSSOP (DGN) | 8	-	-	Call TI	Call TI	-40 to 125	27325
UCC27325DGNR	Active	Production	HVSSOP (DGN) | 8	2500 | LARGE T&R	Yes	NIPDAU	Level-1-260C-UNLIM	-40 to 125	27325
UCC27325DGNR.A	Active	Production	HVSSOP (DGN) | 8	2500 | LARGE T&R	Yes	NIPDAU	Level-1-260C-UNLIM	-40 to 125	27325
UCC27325DGNRG4	Active	Production	HVSSOP (DGN) | 8	2500 | LARGE T&R	Yes	NIPDAU	Level-1-260C-UNLIM	-40 to 125	27325
UCC27325DGNRG4.A	Active	Production	HVSSOP (DGN) | 8	2500 | LARGE T&R	Yes	NIPDAU	Level-1-260C-UNLIM	-40 to 125	27325
UCC27325DR	Active	Production	SOIC (D) | 8	2500 | LARGE T&R	-	NIPDAU	Level-1-260C-UNLIM	-40 to 125	27325
UCC27325DR.A	Active	Production	SOIC (D) | 8	2500 | LARGE T&R	-	NIPDAU	Level-1-260C-UNLIM	-40 to 125	27325
UCC27325DRG4	Active	Production	SOIC (D) | 8	2500 | LARGE T&R	-	NIPDAU	Level-1-260C-UNLIM	-40 to 125	27325
UCC27325DRG4.A	Active	Production	SOIC (D) | 8	2500 | LARGE T&R	-	NIPDAU	Level-1-260C-UNLIM	-40 to 125	27325

Orderable part number	Status (1)	Material type (2)	Package | Pins	Package qty | Carrier	RoHS (3)	Lead finish/ Ball material (4)	MSL rating/ Peak reflow (5)	Op temp (°C)	Part marking (6)
UCC27325P	NRND	Production	PDIP (P) | 8	50 | TUBE	Yes	NIPDAU	N/A for Pkg Type	-40 to 125	UCC27325P
UCC27325P.A	NRND	Production	PDIP (P) | 8	50 | TUBE	Yes	NIPDAU	N/A for Pkg Type	-40 to 125	UCC27325P
UCC27325PE4	NRND	Production	PDIP (P) | 8	50 | TUBE	Yes	NIPDAU	N/A for Pkg Type	-40 to 125	UCC27325P
UCC37323D	Obsolete	Production	SOIC (D) | 8	-	-	Call TI	Call TI	0 to 70	37323
UCC37323DGN	Obsolete	Production	HVSSOP (DGN) | 8	-	-	Call TI	Call TI	0 to 70	37323
UCC37323DGNR	Active	Production	HVSSOP (DGN) | 8	2500 | LARGE T&R	Yes	NIPDAU	Level-1-260C-UNLIM	0 to 70	37323
UCC37323DGNR.A	Active	Production	HVSSOP (DGN) | 8	2500 | LARGE T&R	Yes	NIPDAU	Level-1-260C-UNLIM	0 to 70	37323
UCC37323DR	Active	Production	SOIC (D) | 8	2500 | LARGE T&R	Yes	NIPDAU	Level-1-260C-UNLIM	0 to 70	37323
UCC37323DR.A	Active	Production	SOIC (D) | 8	2500 | LARGE T&R	Yes	NIPDAU	Level-1-260C-UNLIM	0 to 70	37323
UCC37323P	NRND	Production	PDIP (P) | 8	50 | TUBE	Yes	NIPDAU	N/A for Pkg Type	0 to 70	UCC37323P
UCC37323P.A	NRND	Production	PDIP (P) | 8	50 | TUBE	Yes	NIPDAU	N/A for Pkg Type	0 to 70	UCC37323P
UCC37324D	Obsolete	Production	SOIC (D) | 8	-	-	Call TI	Call TI	0 to 70	37324
UCC37324DGN	Obsolete	Production	HVSSOP (DGN) | 8	-	-	Call TI	Call TI	0 to 70	37324
UCC37324DGNR	Active	Production	HVSSOP (DGN) | 8	2500 | LARGE T&R	Yes	NIPDAU	Level-1-260C-UNLIM	0 to 70	37324
UCC37324DGNR.A	Active	Production	HVSSOP (DGN) | 8	2500 | LARGE T&R	Yes	NIPDAU	Level-1-260C-UNLIM	0 to 70	37324
UCC37324DR	Active	Production	SOIC (D) | 8	2500 | LARGE T&R	Yes	NIPDAU	Level-1-260C-UNLIM	0 to 70	37324
UCC37324DR.A	Active	Production	SOIC (D) | 8	2500 | LARGE T&R	Yes	NIPDAU	Level-1-260C-UNLIM	0 to 70	37324
UCC37324P	NRND	Production	PDIP (P) | 8	50 | TUBE	Yes	NIPDAU	N/A for Pkg Type	0 to 70	UCC37324P
UCC37324P.A	NRND	Production	PDIP (P) | 8	50 | TUBE	Yes	NIPDAU	N/A for Pkg Type	0 to 70	UCC37324P
UCC37324PE4	NRND	Production	PDIP (P) | 8	50 | TUBE	Yes	NIPDAU	N/A for Pkg Type	0 to 70	UCC37324P
UCC37325D	Obsolete	Production	SOIC (D) | 8	-	-	Call TI	Call TI	0 to 70	37325
UCC37325DGN	Obsolete	Production	HVSSOP (DGN) | 8	-	-	Call TI	Call TI	0 to 70	37325
UCC37325DGNR	Active	Production	HVSSOP (DGN) | 8	2500 | LARGE T&R	Yes	NIPDAU	Level-1-260C-UNLIM	0 to 70	37325
UCC37325DGNR.A	Active	Production	HVSSOP (DGN) | 8	2500 | LARGE T&R	Yes	NIPDAU	Level-1-260C-UNLIM	0 to 70	37325
UCC37325DGNRG4	Active	Production	HVSSOP (DGN) | 8	2500 | LARGE T&R	Yes	NIPDAU	Level-1-260C-UNLIM	0 to 70	37325
UCC37325DR	Active	Production	SOIC (D) | 8	2500 | LARGE T&R	Yes	NIPDAU	Level-1-260C-UNLIM	0 to 70	37325
UCC37325DR.A	Active	Production	SOIC (D) | 8	2500 | LARGE T&R	Yes	NIPDAU	Level-1-260C-UNLIM	0 to 70	37325
UCC37325P	NRND	Production	PDIP (P) | 8	50 | TUBE	Yes	NIPDAU	N/A for Pkg Type	0 to 70	UCC37325P
UCC37325P.A	NRND	Production	PDIP (P) | 8	50 | TUBE	Yes	NIPDAU	N/A for Pkg Type	0 to 70	UCC37325P

(1) **Status:** For more details on status, see our product life cycle.

(2) **Material type:** When designated, preproduction parts are prototypes/experimental devices, and are not yet approved or released for full production. Testing and final process, including without limitation quality assurance, reliability performance testing, and/or process qualification, may not yet be complete, and this item is subject to further changes or possible discontinuation. If available for ordering, purchases will be subject to an additional waiver at checkout, and are intended for early internal evaluation purposes only. These items are sold without warranties of any kind.

(3) **RoHS values:** Yes, No, RoHS Exempt. See the TI RoHS Statement for additional information and value definition.

(4) **Lead finish/Ball material:** Parts may have multiple material finish options. Finish options are separated by a vertical ruled line. Lead finish/Ball material values may wrap to two lines if the finish value exceeds the maximum column width.

(5) **MSL rating/Peak reflow:** The moisture sensitivity level ratings and peak solder (reflow) temperatures. In the event that a part has multiple moisture sensitivity ratings, only the lowest level per JEDEC standards is shown. Refer to the shipping label for the actual reflow temperature that will be used to mount the part to the printed circuit board.

(6) **Part marking:** There may be an additional marking, which relates to the logo, the lot trace code information, or the environmental category of the part.

Multiple part markings will be inside parentheses. Only one part marking contained in parentheses and separated by a "~" will appear on a part. If a line is indented then it is a continuation of the previous line and the two combined represent the entire part marking for that device.

Important Information and Disclaimer: The information provided on this page represents TI's knowledge and belief as of the date that it is provided. TI bases its knowledge and belief on information provided by third parties, and makes no representation or warranty as to the accuracy of such information. Efforts are underway to better integrate information from third parties. TI has taken and continues to take reasonable steps to provide representative and accurate information but may not have conducted destructive testing or chemical analysis on incoming materials and chemicals. TI and TI suppliers consider certain information to be proprietary, and thus CAS numbers and other limited information may not be available for release.

In no event shall TI's liability arising out of such information exceed the total purchase price of the TI part(s) at issue in this document sold by TI to Customer on an annual basis.

OTHER QUALIFIED VERSIONS OF UCC27324 :

- Automotive : UCC27324-Q1

NOTE: Qualified Version Definitions:

- Automotive - Q100 devices qualified for high-reliability automotive applications targeting zero defects

TAPE AND REEL INFORMATION

REEL DIMENSIONS

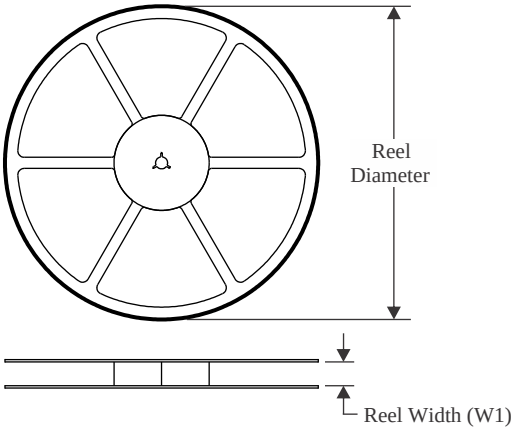

TAPE DIMENSIONS

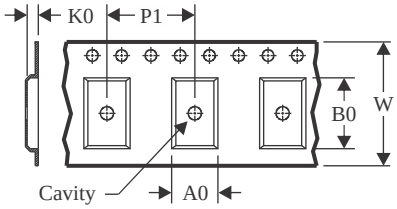

A0	Dimension designed to accommodate the component width
B0	Dimension designed to accommodate the component length
K0	Dimension designed to accommodate the component thickness
W	Overall width of the carrier tape
P1	Pitch between successive cavity centers

QUADRANT ASSIGNMENTS FOR PIN 1 ORIENTATION IN TAPE

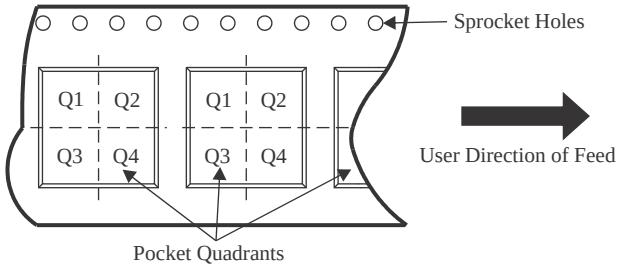

*All dimensions are nominal

Device	Package Type	Package Drawing	Pins	SPQ	Reel Diameter (mm)	Reel Width W1 (mm)	A0 (mm)	B0 (mm)	K0 (mm)	P1 (mm)	W (mm)	Pin1 Quadrant
UCC27323DGNR	HVSSOP	DGN	8	2500	330.0	12.4	5.3	3.4	1.4	8.0	12.0	Q1
UCC27323DR	SOIC	D	8	2500	330.0	12.4	6.4	5.2	2.1	8.0	12.0	Q1
UCC27324DGNR	HVSSOP	DGN	8	2500	330.0	12.4	5.3	3.4	1.4	8.0	12.0	Q1
UCC27324DR	SOIC	D	8	2500	330.0	12.4	6.4	5.2	2.1	8.0	12.0	Q1
UCC27324DR	SOIC	D	8	2500	330.0	12.4	6.4	5.2	2.1	8.0	12.0	Q1
UCC27324DR	SOIC	D	8	2500	330.0	12.4	6.4	5.2	2.1	8.0	12.0	Q1
UCC27325DGNR	HVSSOP	DGN	8	2500	330.0	12.4	5.3	3.4	1.4	8.0	12.0	Q1
UCC27325DGNRG4	HVSSOP	DGN	8	2500	330.0	12.4	5.3	3.4	1.4	8.0	12.0	Q1
UCC27325DR	SOIC	D	8	2500	330.0	12.4	6.4	5.2	2.1	8.0	12.0	Q1
UCC27325DRG4	SOIC	D	8	2500	330.0	12.4	6.4	5.2	2.1	8.0	12.0	Q1
UCC37323DGNR	HVSSOP	DGN	8	2500	330.0	12.4	5.3	3.4	1.4	8.0	12.0	Q1
UCC37323DR	SOIC	D	8	2500	330.0	12.4	6.4	5.2	2.1	8.0	12.0	Q1
UCC37323DR	SOIC	D	8	2500	330.0	12.4	6.4	5.2	2.1	8.0	12.0	Q1
UCC37324DGNR	HVSSOP	DGN	8	2500	330.0	12.4	5.3	3.4	1.4	8.0	12.0	Q1
UCC37324DR	SOIC	D	8	2500	330.0	12.4	6.4	5.2	2.1	8.0	12.0	Q1
UCC37324DR	SOIC	D	8	2500	330.0	12.4	6.4	5.2	2.1	8.0	12.0	Q1

Device	Package Type	Package Drawing	Pins	SPQ	Reel Diameter (mm)	Reel Width W1 (mm)	A0 (mm)	B0 (mm)	K0 (mm)	P1 (mm)	W (mm)	Pin1 Quadrant
UCC37325DGNR	HVSSOP	DGN	8	2500	330.0	12.4	5.3	3.4	1.4	8.0	12.0	Q1
UCC37325DR	SOIC	D	8	2500	330.0	12.4	6.4	5.2	2.1	8.0	12.0	Q1
UCC37325DR	SOIC	D	8	2500	330.0	12.4	6.4	5.2	2.1	8.0	12.0	Q1

TAPE AND REEL BOX DIMENSIONS

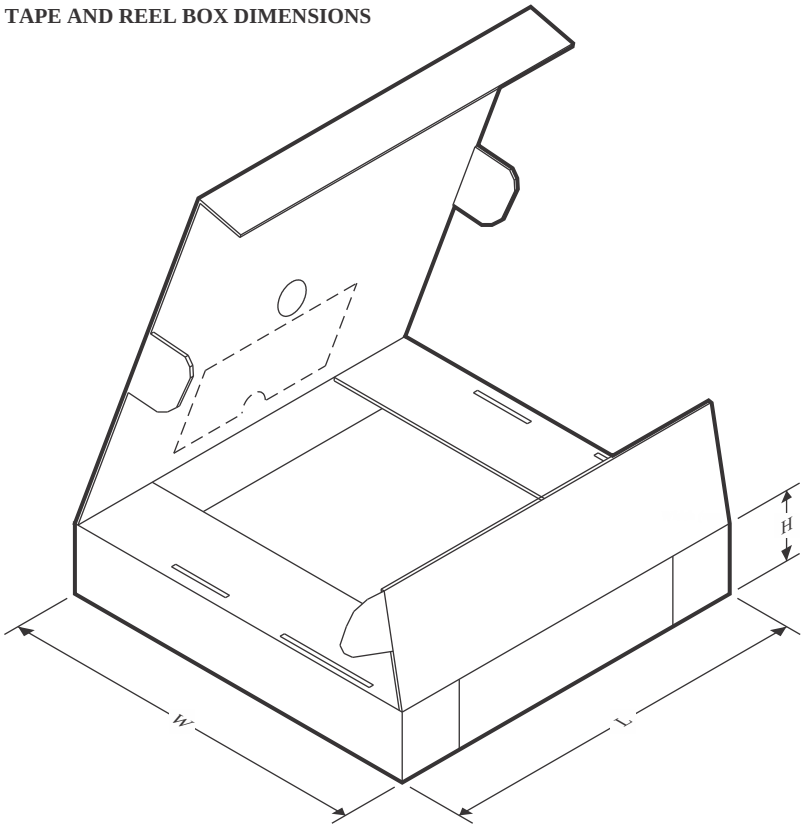

*All dimensions are nominal

Device	Package Type	Package Drawing	Pins	SPQ	Length (mm)	Width (mm)	Height (mm)
UCC27323DGNR	HVSSOP	DGN	8	2500	353.0	353.0	32.0
UCC27323DR	SOIC	D	8	2500	353.0	353.0	32.0
UCC27324DGNR	HVSSOP	DGN	8	2500	353.0	353.0	32.0
UCC27324DR	SOIC	D	8	2500	353.0	353.0	32.0
UCC27324DR	SOIC	D	8	2500	353.0	353.0	32.0
UCC27324DR	SOIC	D	8	2500	353.0	353.0	32.0
UCC27325DGNR	HVSSOP	DGN	8	2500	353.0	353.0	32.0
UCC27325DGNRG4	HVSSOP	DGN	8	2500	353.0	353.0	32.0
UCC27325DR	SOIC	D	8	2500	353.0	353.0	32.0
UCC27325DRG4	SOIC	D	8	2500	353.0	353.0	32.0
UCC37323DGNR	HVSSOP	DGN	8	2500	353.0	353.0	32.0
UCC37323DR	SOIC	D	8	2500	353.0	353.0	32.0
UCC37323DR	SOIC	D	8	2500	353.0	353.0	32.0
UCC37324DGNR	HVSSOP	DGN	8	2500	353.0	353.0	32.0
UCC37324DR	SOIC	D	8	2500	353.0	353.0	32.0
UCC37324DR	SOIC	D	8	2500	353.0	353.0	32.0
UCC37325DGNR	HVSSOP	DGN	8	2500	353.0	353.0	32.0
UCC37325DR	SOIC	D	8	2500	340.5	338.1	20.6

Device	Package Type	Package Drawing	Pins	SPQ	Length (mm)	Width (mm)	Height (mm)
UCC37325DR	SOIC	D	8	2500	353.0	353.0	32.0

TUBE

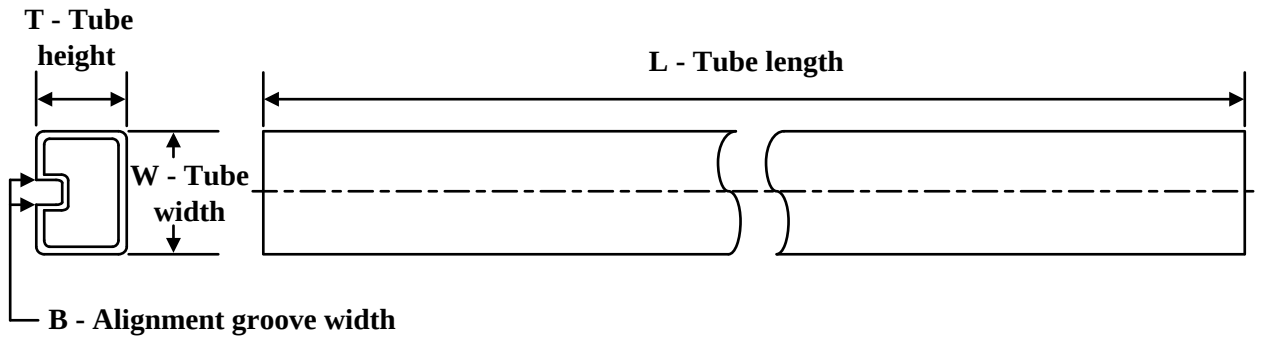

*All dimensions are nominal

Device	Package Name	Package Type	Pins	SPQ	L (mm)	W (mm)	T (µm)	B (mm)
UCC27323P	P	PDIP	8	50	506	13.97	11230	4.32
UCC27323P.A	P	PDIP	8	50	506	13.97	11230	4.32
UCC27324P	P	PDIP	8	50	506	13.97	11230	4.32
UCC27324P.A	P	PDIP	8	50	506	13.97	11230	4.32
UCC27324PE4	P	PDIP	8	50	506	13.97	11230	4.32
UCC27325P	P	PDIP	8	50	506	13.97	11230	4.32
UCC27325P.A	P	PDIP	8	50	506	13.97	11230	4.32
UCC27325PE4	P	PDIP	8	50	506	13.97	11230	4.32
UCC37323P	P	PDIP	8	50	506	13.97	11230	4.32
UCC37323P.A	P	PDIP	8	50	506	13.97	11230	4.32
UCC37324P	P	PDIP	8	50	506	13.97	11230	4.32
UCC37324P.A	P	PDIP	8	50	506	13.97	11230	4.32
UCC37324PE4	P	PDIP	8	50	506	13.97	11230	4.32
UCC37325P	P	PDIP	8	50	506	13.97	11230	4.32
UCC37325P.A	P	PDIP	8	50	506	13.97	11230	4.32

GENERIC PACKAGE VIEW

DGN 8

PowerPAD™ HVSSOP - 1.1 mm max height

3 x 3, 0.65 mm pitch

SMALL OUTLINE PACKAGE

This image is a representation of the package family, actual package may vary.
Refer to the product data sheet for package details.

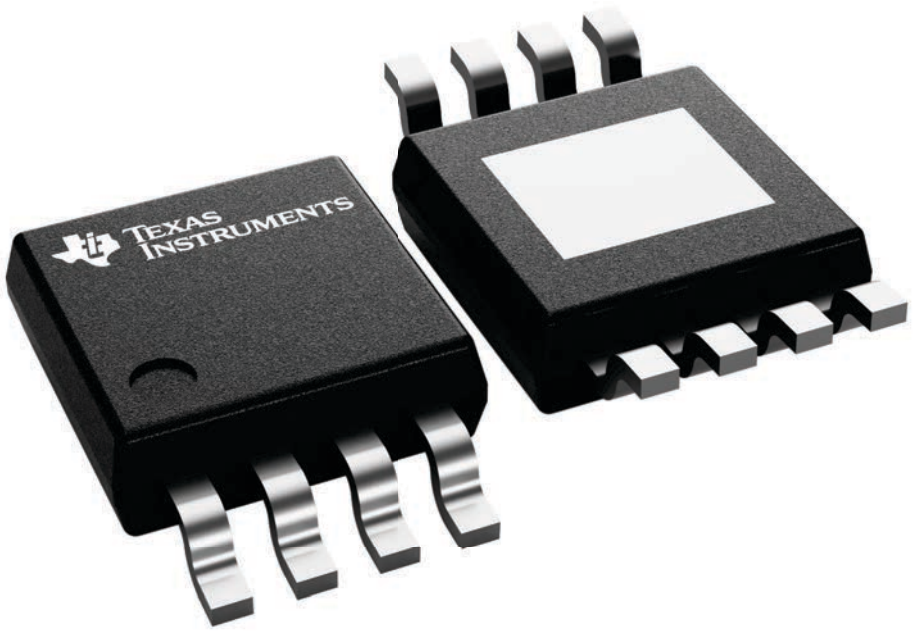

4225482/B

PACKAGE OUTLINE

DGN0008D

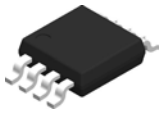

PowerPAD™ VSSOP - 1.1 mm max height

SMALL OUTLINE PACKAGE

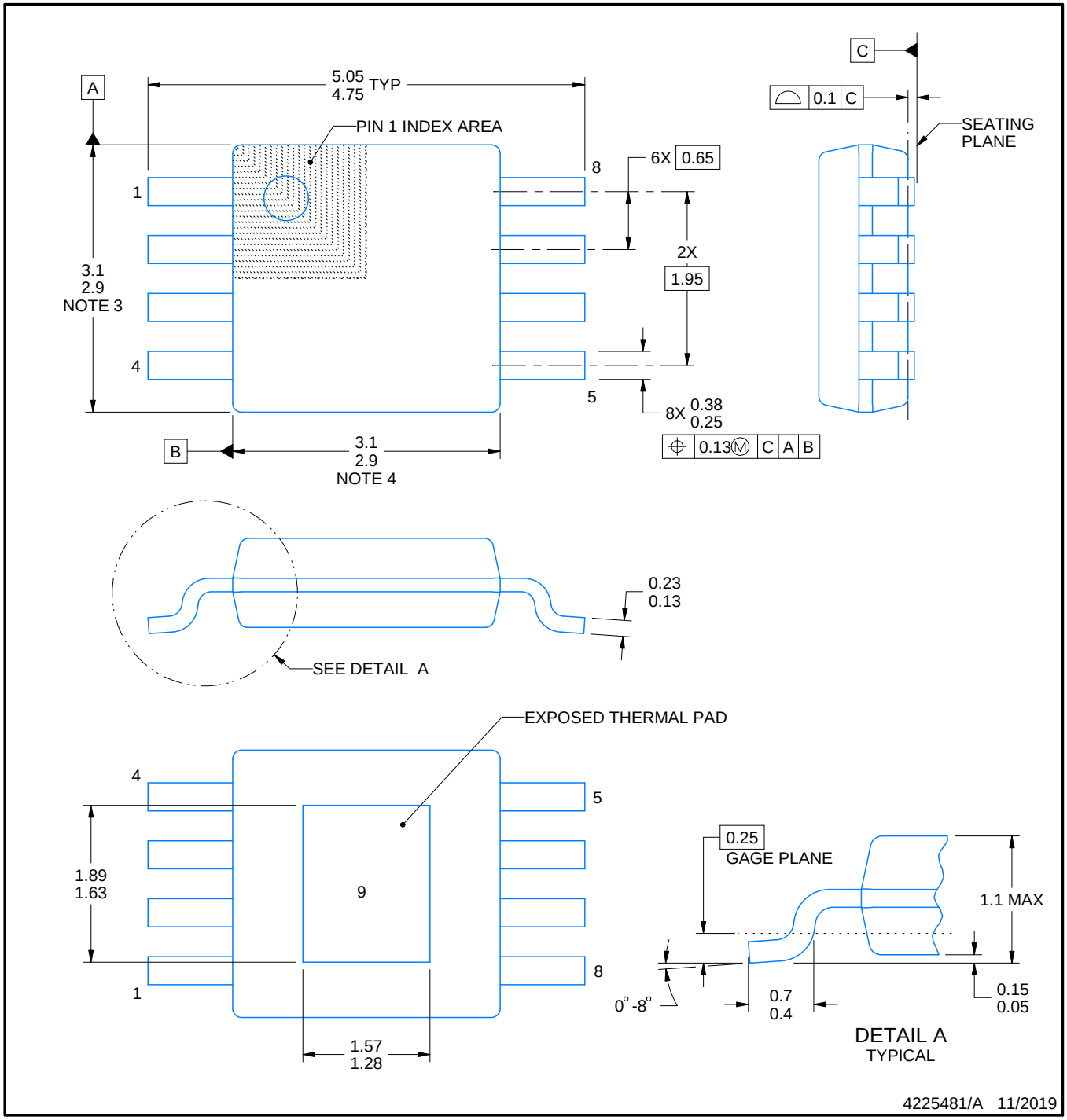

PowerPAD is a trademark of Texas Instruments.

NOTES:

1. All linear dimensions are in millimeters. Any dimensions in parenthesis are for reference only. Dimensioning and tolerancing per ASME Y14.5M.
2. This drawing is subject to change without notice.
3. This dimension does not include mold flash, protrusions, or gate burrs. Mold flash, protrusions, or gate burrs shall not exceed 0.15 mm per side.
4. This dimension does not include interlead flash. Interlead flash shall not exceed 0.25 mm per side.
5. Reference JEDEC registration MO-187.

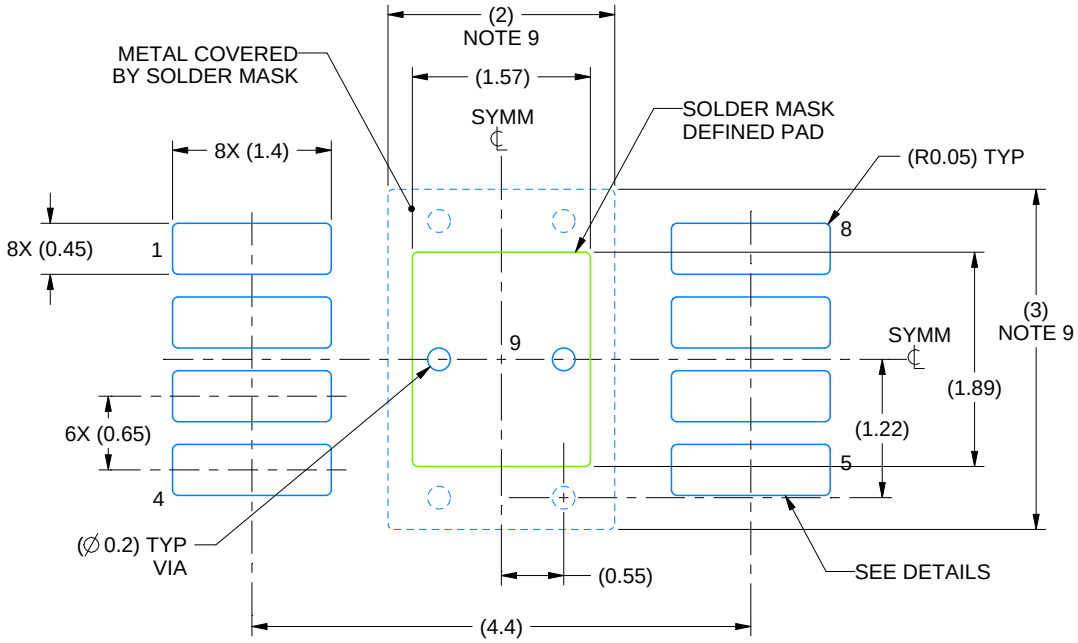

LAND PATTERN EXAMPLE
EXPOSED METAL SHOWN
SCALE: 15X

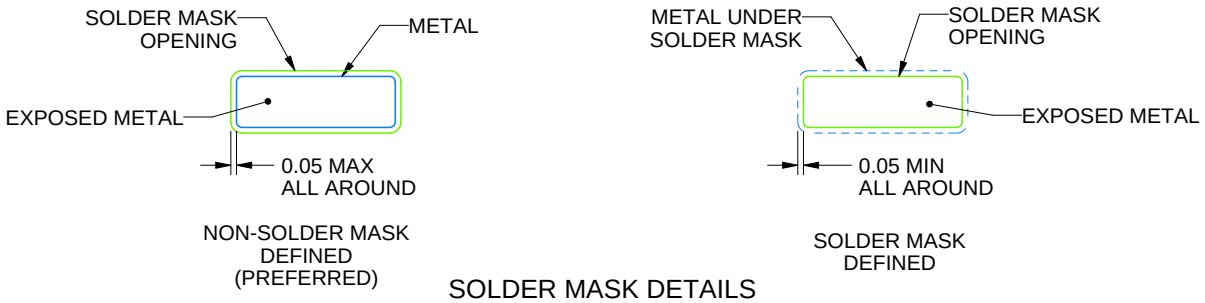

SOLDER MASK DETAILS

4225481/A 11/2019

NOTES: (continued)

6. Publication IPC-7351 may have alternate designs.
7. Solder mask tolerances between and around signal pads can vary based on board fabrication site.
8. Vias are optional depending on application, refer to device data sheet. If any vias are implemented, refer to their locations shown on this view. It is recommended that vias under paste be filled, plugged or tented.
9. Size of metal pad may vary due to creepage requirement.

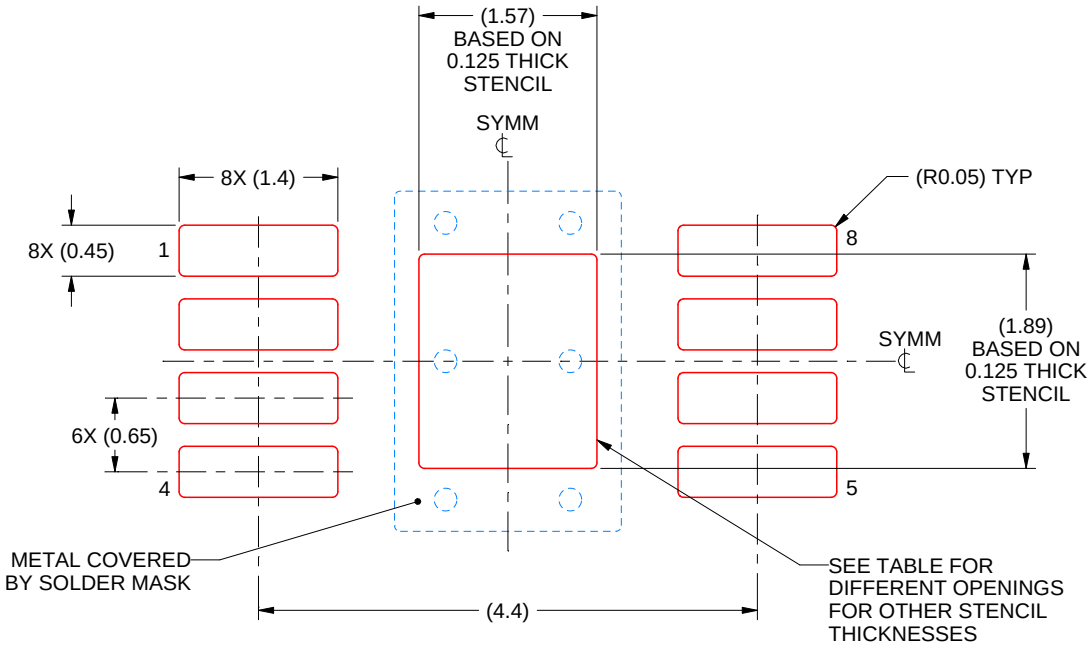

SOLDER PASTE EXAMPLE
EXPOSED PAD 9:
100% PRINTED SOLDER COVERAGE BY AREA
SCALE: 15X

STENCIL THICKNESS	SOLDER STENCIL OPENING
0.1	1.76 X 2.11
0.125	1.57 X 1.89 (SHOWN)
0.15	1.43 X 1.73
0.175	1.33 X 1.60

4225481/A 11/2019

NOTES: (continued)

10. Laser cutting apertures with trapezoidal walls and rounded corners may offer better paste release. IPC-7525 may have alternate design recommendations.
11. Board assembly site may have different recommendations for stencil design.

PACKAGE OUTLINE

DGN0008H

PowerPAD™ VSSOP - 1.1 mm max height

SMALL OUTLINE PACKAGE

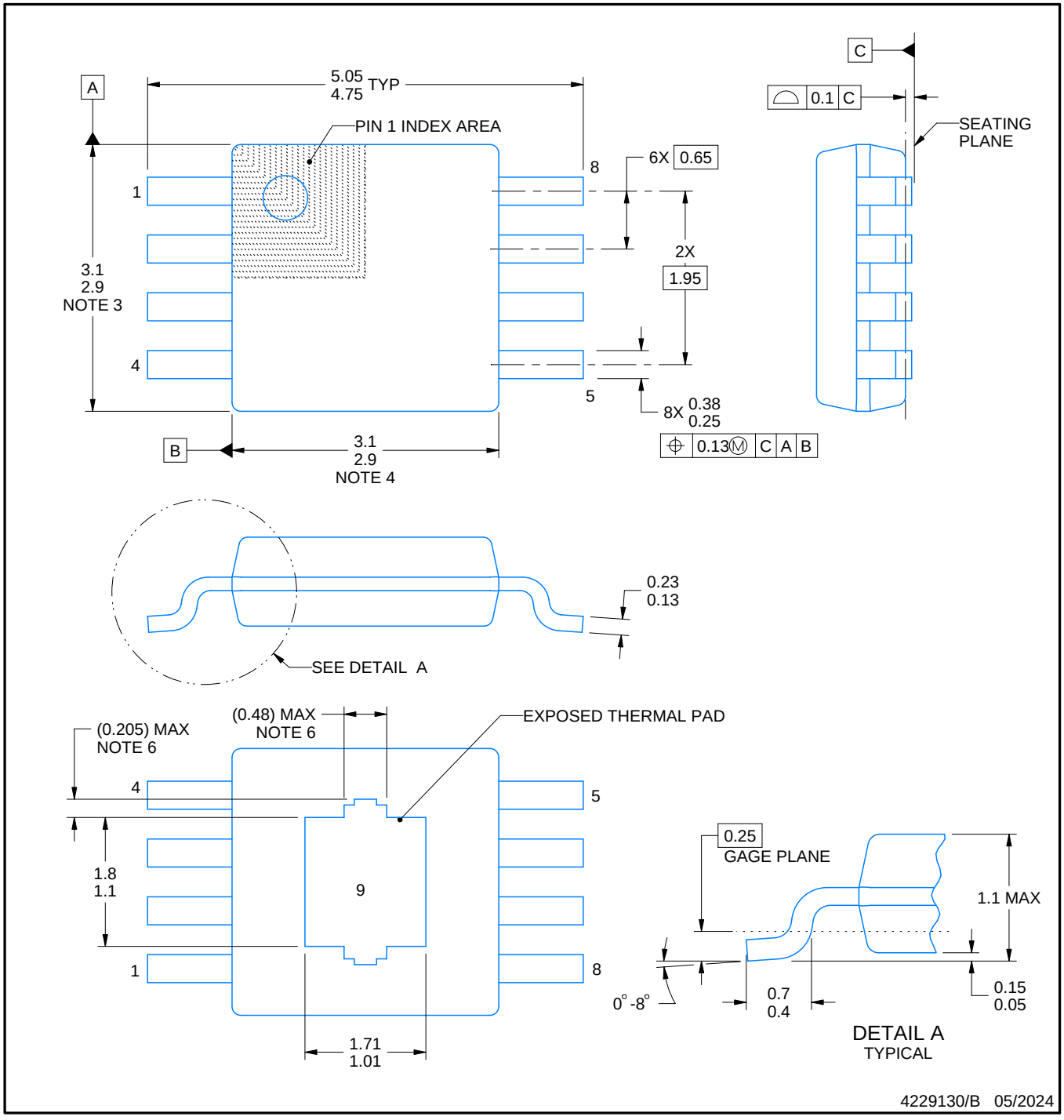

PowerPAD is a trademark of Texas Instruments.

NOTES:

1. All linear dimensions are in millimeters. Any dimensions in parenthesis are for reference only. Dimensioning and tolerancing per ASME Y14.5M.
2. This drawing is subject to change without notice.
3. This dimension does not include mold flash, protrusions, or gate burrs. Mold flash, protrusions, or gate burrs shall not exceed 0.15 mm per side.
4. This dimension does not include interlead flash. Interlead flash shall not exceed 0.25 mm per side.
5. Reference JEDEC registration MO-187.
6. Features may differ or may not be present.

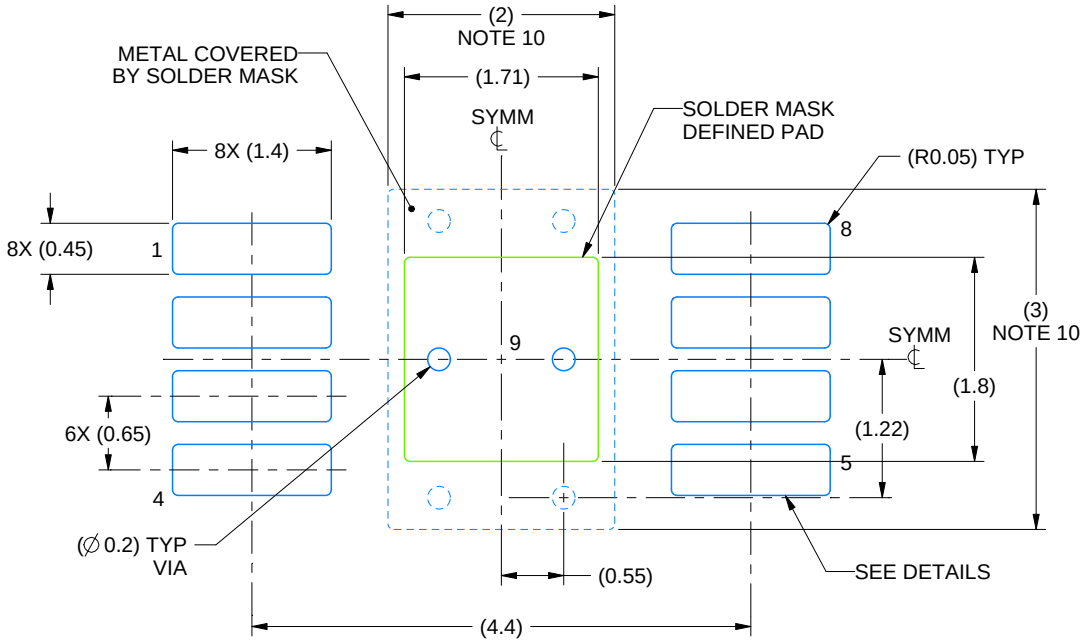

LAND PATTERN EXAMPLE
EXPOSED METAL SHOWN
SCALE: 15X

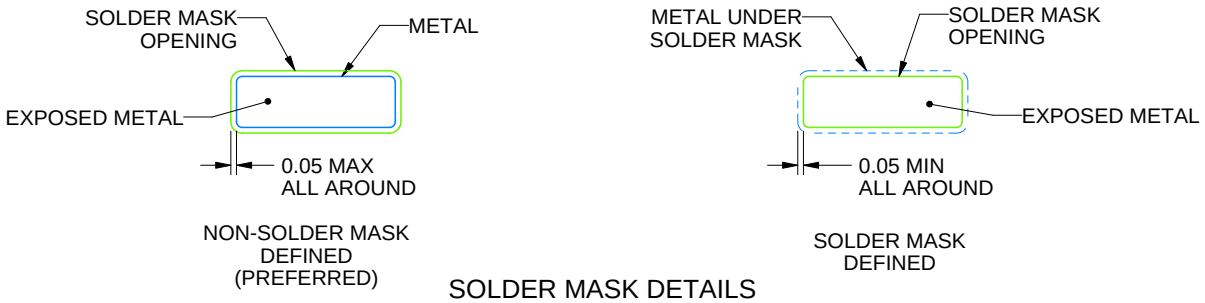

SOLDER MASK DETAILS

4229130/B 05/2024

NOTES: (continued)

7. Publication IPC-7351 may have alternate designs.
8. Solder mask tolerances between and around signal pads can vary based on board fabrication site.
9. Vias are optional depending on application, refer to device data sheet. If any vias are implemented, refer to their locations shown on this view. It is recommended that vias under paste be filled, plugged or tented.
10. Size of metal pad may vary due to creepage requirement.

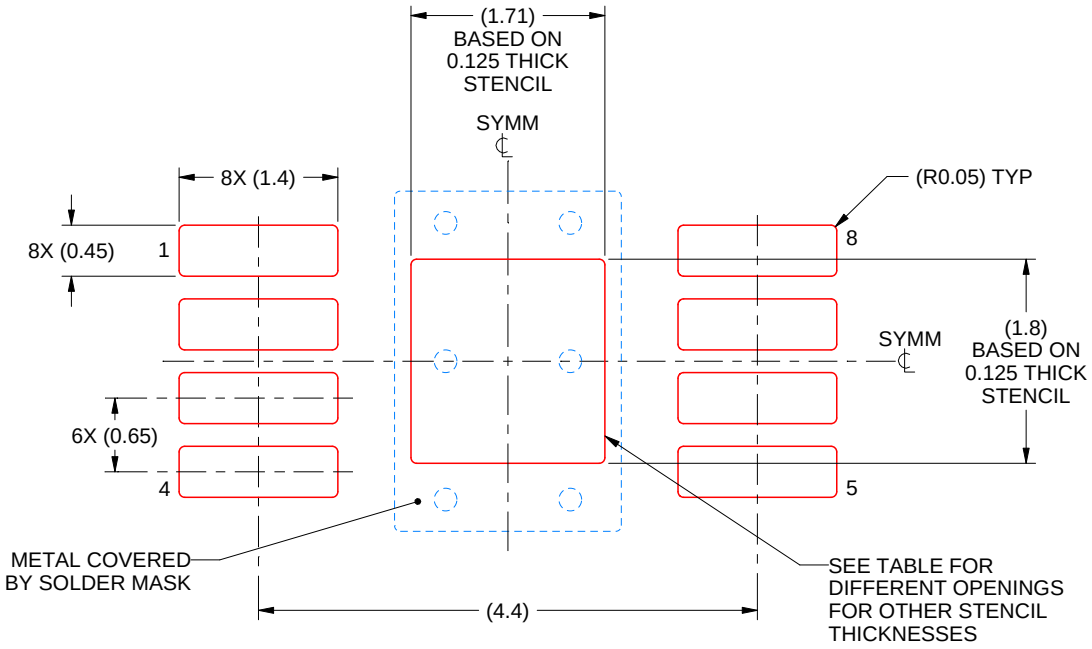

SOLDER PASTE EXAMPLE
EXPOSED PAD 9:
100% PRINTED SOLDER COVERAGE BY AREA
SCALE: 15X

STENCIL THICKNESS	SOLDER STENCIL OPENING
0.1	1.91 X 2.01
0.125	1.71 X 1.80 (SHOWN)
0.15	1.56 X 1.64
0.175	1.45 X 1.52

4229130/B 05/2024

NOTES: (continued)

11. Laser cutting apertures with trapezoidal walls and rounded corners may offer better paste release. IPC-7525 may have alternate design recommendations.
12. Board assembly site may have different recommendations for stencil design.

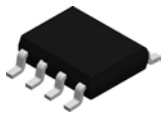

PACKAGE OUTLINE

D0008A

SOIC - 1.75 mm max height

SMALL OUTLINE INTEGRATED CIRCUIT

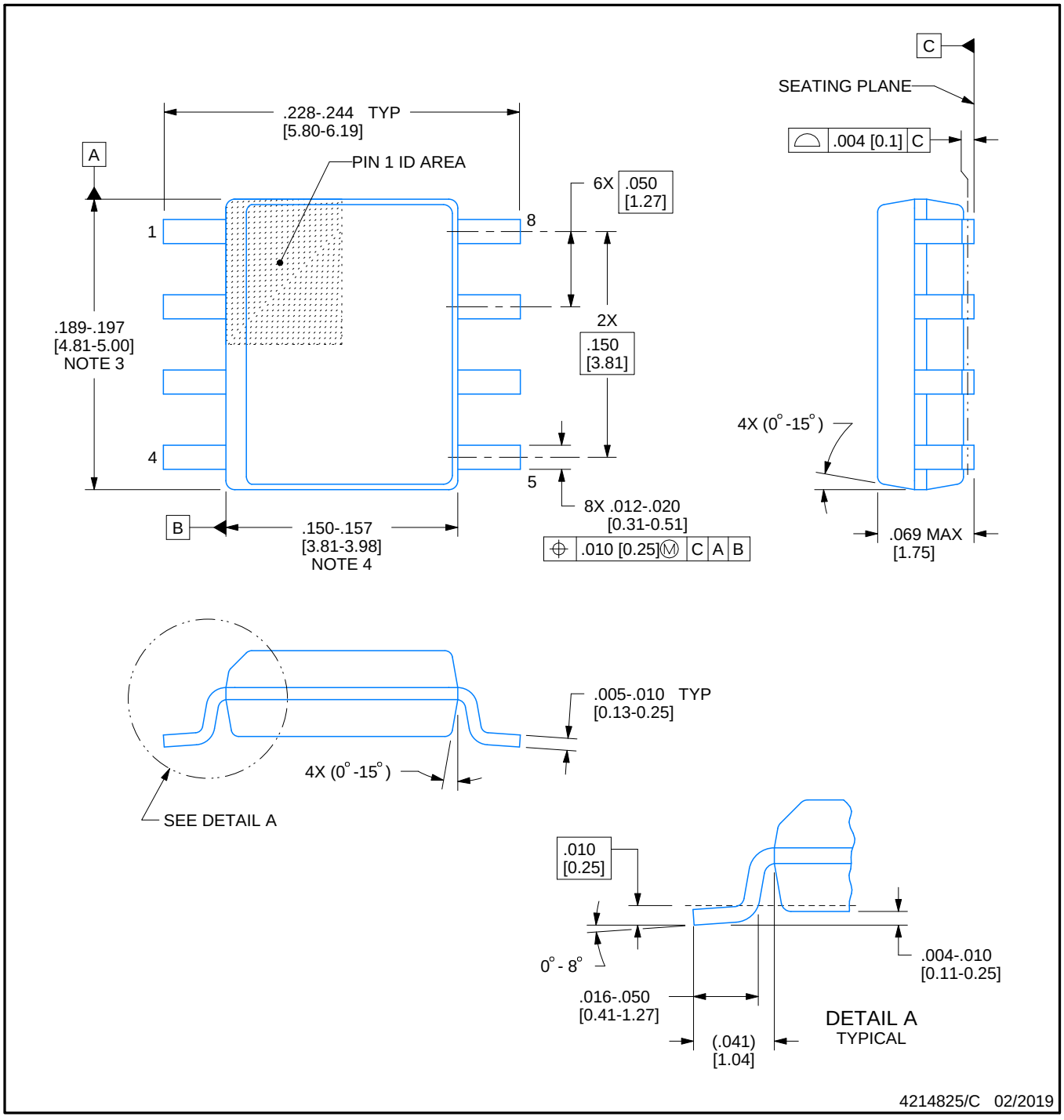

NOTES:

1. Linear dimensions are in inches [millimeters]. Dimensions in parenthesis are for reference only. Controlling dimensions are in inches. Dimensioning and tolerancing per ASME Y14.5M.
2. This drawing is subject to change without notice.
3. This dimension does not include mold flash, protrusions, or gate burrs. Mold flash, protrusions, or gate burrs shall not exceed .006 [0.15] per side.
4. This dimension does not include interlead flash.
5. Reference JEDEC registration MS-012, variation AA.

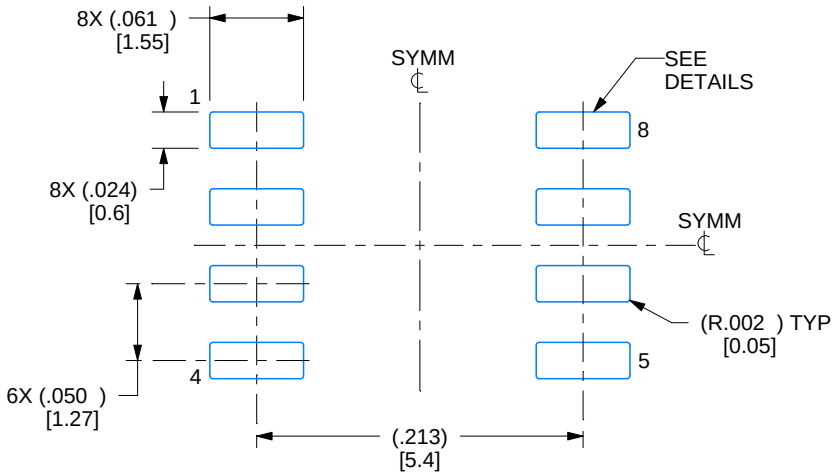

LAND PATTERN EXAMPLE
EXPOSED METAL SHOWN
SCALE:8X

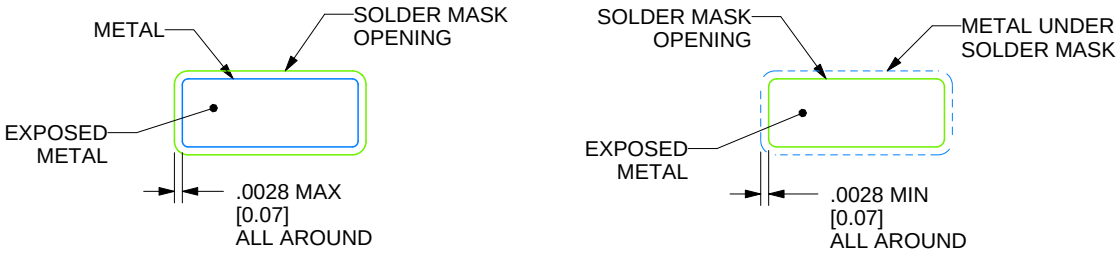

SOLDER MASK DETAILS

4214825/C 02/2019

NOTES: (continued)

6. Publication IPC-7351 may have alternate designs.
7. Solder mask tolerances between and around signal pads can vary based on board fabrication site.

EXAMPLE STENCIL DESIGN

D0008A

SOIC - 1.75 mm max height

SMALL OUTLINE INTEGRATED CIRCUIT

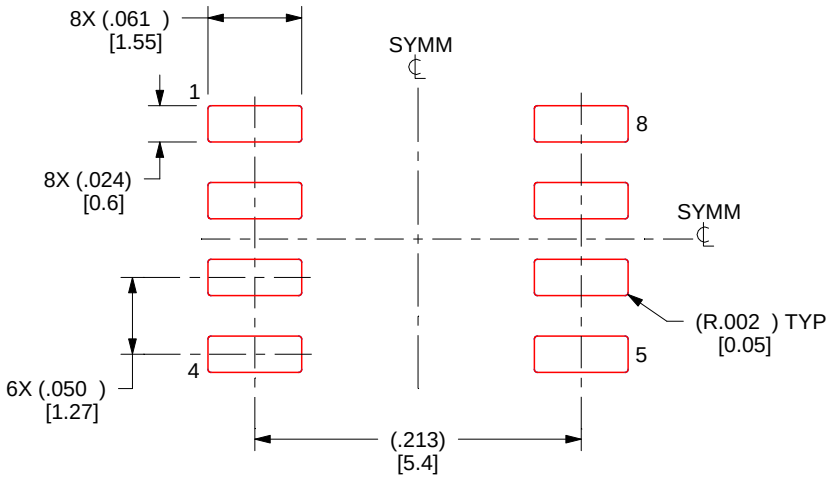

SOLDER PASTE EXAMPLE
BASED ON .005 INCH [0.125 MM] THICK STENCIL
SCALE:8X

4214825/C 02/2019

NOTES: (continued)

8. Laser cutting apertures with trapezoidal walls and rounded corners may offer better paste release. IPC-7525 may have alternate design recommendations.
9. Board assembly site may have different recommendations for stencil design.

P (R–PDIP–T8) PLASTIC DUAL–IN–LINE PACKAGE

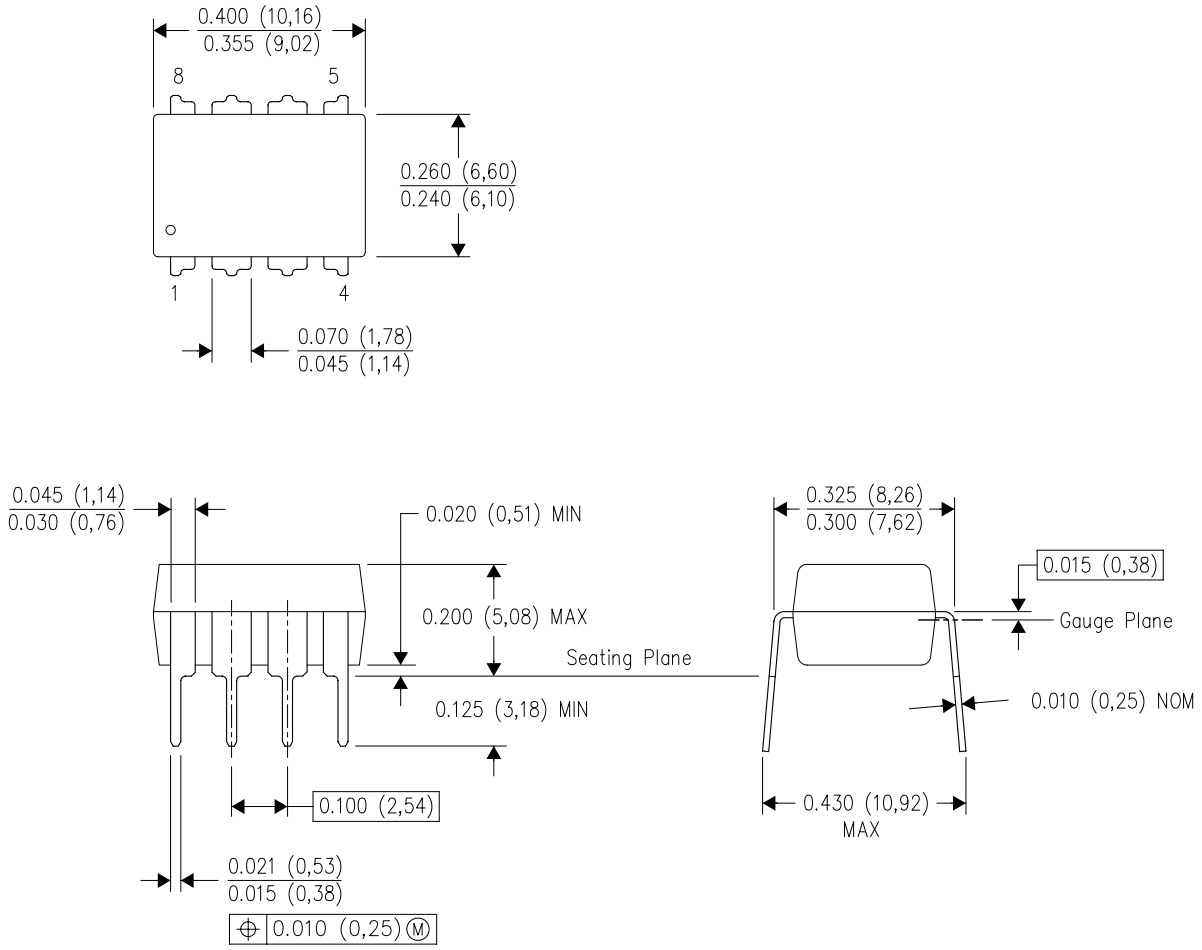

NOTES:
A. All linear dimensions are in inches (millimeters).
B. This drawing is subject to change without notice.
C. Falls within JEDEC MS–001 variation BA.

重要なお知らせと免責事項

TI は、技術データと信頼性データ (データシートを含みます)、設計リソース (リファレンス デザインを含みます)、アプリケーションや設計に関する各種アドバイス、Web ツール、安全性情報、その他のリソースを、欠陥が存在する可能性のある「現状のまま」提供しており、商品性および特定目的に対する適合性の黙示保証、第三者の知的財産権の非侵害保証を含むいかなる保証も、明示的または黙示的にかかわらず拒否します。

これらのリソースは、TI 製品を使用する設計の経験を積んだ開発者への提供を意図したものです。(1) お客様のアプリケーションに適した TI 製品の選定、(2) お客様のアプリケーションの設計、検証、試験、(3) お客様のアプリケーションに該当する各種規格や、その他のあらゆる安全性、セキュリティ、規制、または他の要件への確実な適合に関する責任を、お客様のみが単独で負うものとします。

上記の各種リソースは、予告なく変更される可能性があります。これらのリソースは、リソースで説明されている TI 製品を使用するアプリケーションの開発の目的でのみ、TI はその使用をお客様に許諾します。これらのリソースに関して、他の目的で複製することや掲載することは禁止されています。TI や第三者の知的財産権のライセンスが付与されている訳ではありません。お客様は、これらのリソースを自身で使用した結果発生するあらゆる申し立て、損害、費用、損失、責任について、TI およびその代理人を完全に補償するものとし、TI は一切の責任を拒否します。

TI の製品は、 TI の販売条件 、 TI の総合的な品質ガイドライン 、 ti.com または TI 製品などに関連して提供される他の適用条件に従い提供されます。TI がこれらのリソースを提供することは、適用される TI の保証または他の保証の放棄の拡大や変更を意味するものではありません。 TI がカスタム、またはカスタマー仕様として明示的に指定していない限り、TI の製品は標準的なカタログに掲載される汎用機器です。

お客様がいかなる追加条項または代替条項を提案する場合も、TI はそれらに異議を唱え、拒否します。

Copyright © 2026, Texas Instruments Incorporated

最終更新日：2025 年 10 月