SNx5LBC180A 低消費電力、差動ライン・ドライバとレシーバのペア

1 特長

- 最大 30Mbps の信号速度(1)向けに設計された、高速かつ低消費電力の LinBICMOS™ 回路
- バス・ピン ESD 保護、15kV HBM
- 低ディセーブル消費電流要件: 700μA 以下
- 長いケーブルを使用する高速マルチポイント・データ伝送用に設計
- -7V～12V の同相電圧範囲
- 低消費電流: 最大 15 mA
- ANSI 標準 TIA/EIA-485-A および ISO 8482:1987(E) に準拠
- 正および負の出力電流制限
- ドライバのサーマル・シャットダウン保護 [1]

2 概要

SN65LBC180A および SN75LBC180A 差動ドライバとレシーバのペアは、伝送ラインの特性を考慮し、長いケーブルを使用する双方向データ通信向けに設計されたモノリシック IC です。これらは ANSI 標準 TIA/EIA-485-A および ISO 8482:1987(E) に準拠した平衡型、つまり差動電圧モード・デバイスです。A バージョンは、消費電力を大幅に増やすことなく、従来製品よりも優れたスイッチング性能を提供しています。

これらのデバイスは、差動ライン・ドライバと差動入力ライン・レシーバを組み合わせたもので、5V の単一電源で動作します。ドライバの差動出力とレシーバの差動入力は、全二重動作のために個別の端子に接続されており、電源オフ (V_{CC} = 0) 時にバスの負荷が最小化されるように設計されています。これらのデバイスは、正および負の同相電圧範囲が広いため、ポイント・ツー・ポイントまたはマルチポイントのデータ・バス・アプリケーションに適しています。またこれらのデバイスは、ライン・フォルト状態からの保護のために、正および負の出力電流制限機能を備えています。SN65LBC180A は -40℃～85℃、SN75LBC180A は 0℃～70℃で動作が規定されています。

製品情報

部品番号	パッケージ(1)	本体サイズ (公称)
SN65LBC180ASN75LBC180A	D (SOIC)	4.9mm × 3.91mm
	N (PDIP)	9.81mm × 6.35mm

(1) 利用可能なパッケージについては、このデータシートの末尾にある注文情報を参照してください。

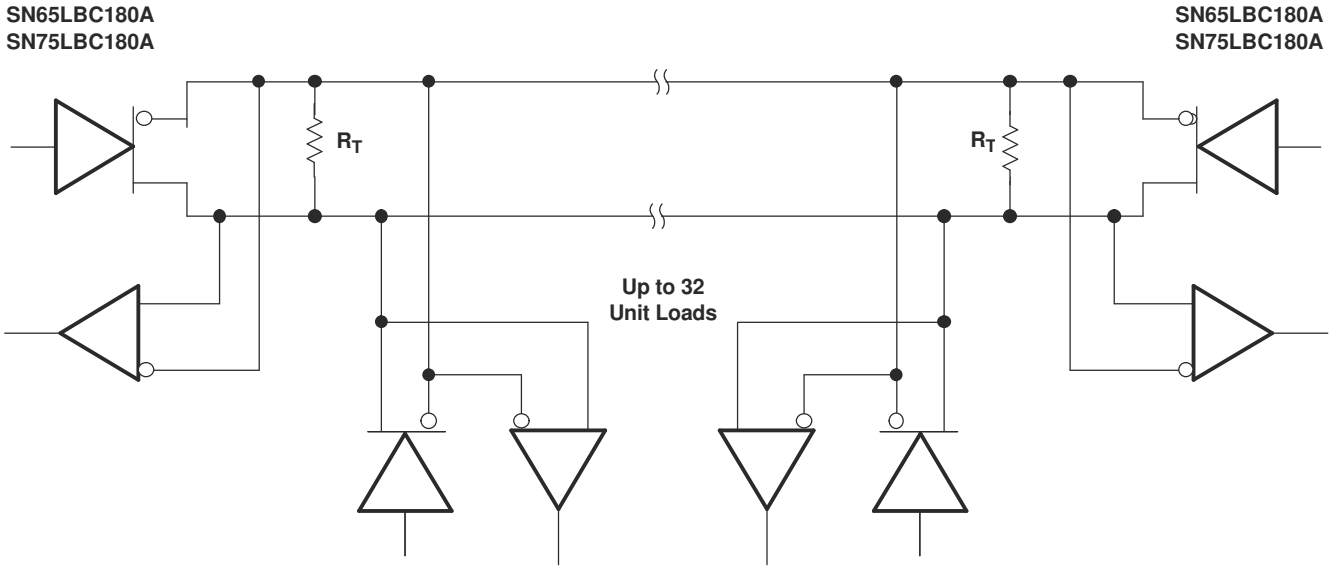

代表的なアプリケーション

[1] TIA/EIA-485-A による信号速度の定義では、遷移時間がビット期間の 30% に制限されており、このデバイスの代表的特性に示すように、この要件なしでより高い信号速度を実現できます。

英語版の TI 製品についての情報を翻訳したこの資料は、製品の概要を確認する目的で便宜的に提供しているものです。該当する正式な英語版の最新情報は、www.ti.com で閲覧でき、その内容が常に優先されます。TI では翻訳の正確性および妥当性につきましては一切保証いたしません。実際の設計などの前には、必ず最新版の英語版をご参照くださいますようお願いいたします。

3 Revision History

資料番号末尾の英字は改訂を表しています。その改訂履歴は英語版に準じています。

Changes from Revision D (April 2009) to Revision E (January 2023) **Page**

- ドキュメントを最新のテキサス・インスツルメンツのフォーマットに変更 1
- Added the *Pin Configuration and Functions* 3
- Added the *Thermal Information* table 5
- Changed the Typical Characteristics graphs 7

Changes from Revision C (June 2002) to Revision D (April 2009) **Page**

- 「特長」から「超」を削除し、12kV を 15kV に変更 1
- Deleted storage temperature and lead temperature from the absolute maximum ratings table 4
- Added receiver output current to the absolute maximum ratings table 4
- Changed the ESD rows in the absolute maximum ratings table 4

Copyright © 2023 Texas Instruments Incorporated

4 Pin Configuration and Functions

SN65LBC180AD (Marked as BL180A)
SN65LBC180AN (Marked as 65LBC180A)
SN75LBC180AD (Marked as LB180A)
SN75LBC180AN (Marked as 75LBC180A)
(TOP VIEW)

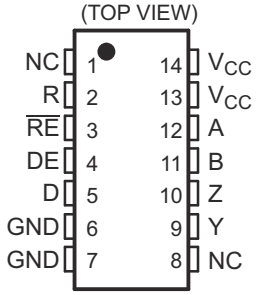

NC – No internal connection
Pins 6 and 7 are connected together internally
Pins 13 and 14 are connected together internally

表 4-1. Pin Functions

PIN		TYPE	DESCRIPTION
NAME	NO.		
NC	1, 8	No Connect	Not electrically connected
R	2	Digital Output	Logic output RS485 data
$\overline{RE}$	3	Digital Input	Receiver enable, active low
DE	4	Digital Input	Driver enable, active high
D	5	Digital Input	Driver data input
GND	6, 7	Ground	Device ground
Y	9	Bus Output	Bus Output Y (Complementary to Z)
Z	10	Bus Output	Bus Output Z (Complementary to Y)
B	11	Bus Input	Bus Input B (Complementary to A)
A	12	Bus Input	Bus Input A (Complementary to B)
V_{CC}	13, 14	Power	5 V Supply

Copyright © 2023 Texas Instruments Incorporated

5 Reference

5.1 Absolute Maximum Ratings

over operating free-air temperature range (unless otherwise noted) [1]

			UNIT
V_{CC}	Supply voltage range[2]		–0.3 V to 6 V
V_I	Input voltage range	A, B	–10 V to 15 V
	Voltage range	D, R, DE, $\overline{RE}$	–0.3 V to V_{CC} + 0.5 V
I_O	Receiver output current		±10 mA
	Continuous total power dissipation[3]		Internally limited
	Total power dissipation		See Dissipation Rating Table
ESD	Bus terminals and GND	HBM (Human Body Model) EIA/JESD22-A114[4]	±15 kV
	All pins	HBM (Human Body Model) EIA/JESD22-A114[4]	±3 kV
		MM (Machine Model) EIA/JESD22-A115	±400 V
		CDM (Charge Device Model) EIA/JESD22-C101	±1.5 kV

(1) Stresses beyond those listed under *absolute maximum ratings* may cause permanent damage to the device. These are stress ratings only, and functional operation of the device at these or any other conditions beyond those indicated under *recommended operating conditions* is not implied. Exposure to absolute-maximum-rated conditions for extended periods may affect device reliability.
(2) All voltage values are with respect to GND except for differential input or output voltages.
(3) The maximum operating junction temperature is internally limited. Use the dissipation rating table to operate below this temperature.
(4) Tested in accordance with MIL-STD-883C, Method 3015.7.

5.2 Dissipation Ratings

PACKAGE	T_A ≤ 25°C POWER RATING	DERATING FACTOR[1] ABOVE T_A = 25°C	T_A = 70°C POWER RATING	T_A = 85°C POWER RATING
D	950 mW	7.6 mW/°C	608 mW	494 mW
N	1150 mW	9.2 mW/°C	736 mW	598 mW

(1) This is the inverse of the junction-to-ambient thermal resistance when board-mounted and with no air flow.

5.3 RECOMMENDED OPERATING CONDITIONS

			MIN	NOM	MAX	UNIT
V_{CC}	Supply voltage		4.75	5	5.25	V
V_{IH}	High-level input voltage	D, DE, and $\overline{RE}$	2		V_{CC}	V
V_{IL}	Low-level input voltage	D, DE, and $\overline{RE}$	0		0.8	V
V_{ID}	Differential input voltage[1]		–12[2]		12	V
V_O, V_I, V_{IC}	Voltage at any bus terminal (separately or common mode)	A, B, Y, or Z	–7		12	V
I_{OH}	High-level output current	Y or Z	–60			mA
		R	–8			
I_{OL}	Low-level output current	Y or Z			60	mA
		R			8	
T_A	Operating free-air temperature	SN65LBC180A	–40		85	°C
		SN75LBC180A	0		70	

(1) Differential input/output bus voltage is measured at the noninverting terminal with respect to the inverting terminal.
(2) The algebraic convention, where the least positive (more negative) limit is designated minimum, is used in this data sheet.

Copyright © 2023 Texas Instruments Incorporated

5.4 Thermal Information

THERMAL METRIC[1]		N (PDIP)	D (SOIC) SN75 Devices	D (SOIC) SN65 Devices	UNIT
		14-Pins	14-Pins	14-Pins	
$R_{\theta JA}$	Junction-to-ambient thermal resistance	54.2	88.6	93.2	°C/W
$R_{\theta JB}$	Junction-to-board thermal resistance	41.6	49.12	49.4	°C/W
ψ_{JT}	Junction-to-top characterization parameter	34.0	14.17	11.2	°C/W
ψ_{JB}	Junction-to-board characterization parameter	21.1	48.6	48.9	°C/W
$R_{\theta JC(bot)}$	Junction-to-case (bottom) thermal resistance	N/A	N/A	N/A	°C/W

(1) For more information about traditional and new thermal metrics, see the *Semiconductor and IC package thermal metrics* application report.

5.5 Driver Electrical Characteristics

over recommended operating conditions (unless otherwise noted)

PARAMETER		TEST CONDITIONS		MIN	TYP[1]	MAX	UNIT
V_{IK}	Input clamp voltage	I_I = –18 mA		–1.5	–0.8		V
$\|V_{OD}\|$	Differential output voltage magnitude	R_L = 54 Ω, See 図 6-1	SN65LBC180A	1	1.5	3	V
			SN75LBC180A	1.1	1.5	3	
		R_L = 60 Ω, See 図 6-2	SN65LBC180A	1	1.5	3	V
			SN75LBC180A	1.1	1.5	3	
$\Delta\|V_{OD}\|$	Change in magnitude of differential output voltage[2]	See 図 6-1 and 図 6-2		–0.2		0.2	V
$V_{OC(ss)}$	Steady-state common-mode output voltage	See 図 6-1		1.8	2.4	2.8	V
ΔV_{OC}	Change in steady-state common-mode output voltage[2]			–0.1		0.1	V
I_O	Output current with power off	V_{CC} = 0 ,	V_O = –7 V to 12 V	–10		10	μA
I_{IH}	High-level input current	V_I = 2 V		–100			μA
I_{IL}	Low-level input current	V_I = 0.8 V		–100			μA
I_{OS}	Short-circuit output current	–7 V ≤ V_O ≤ 12 V		–250	±70	250	mA
I_{CC}	Supply current	V_I = 0 or V_{CC}, No load	Receiver disabled and driver enabled		5.5	9	mA
			Receiver disabled and driver disabled		0.5	1	
			Receiver enabled and driver enabled		8.5	15	

(1) All typical values are at V_{CC} = 5 V, T_A = 25°C.
(2) Δ | V_{OD} | and Δ | V_{OC} | are the changes in the steady-state magnitude of V_{OD} and V_{OC}, respectively, that occur when the input is changed from a high level to a low level.

5.6 Driver Switching Characteristics

over recommended operating conditions (unless otherwise noted)

PARAMETER		TEST CONDITIONS	MIN	TYP	MAX	UNIT
t_{PLH}	Propagation delay time, low-to-high-level output	R_L = 54 Ω, C_L = 50 pF, See 図 6-3	2	6	12	ns
t_{PHL}	Propagation delay time, high-to-low-level output		2	6	12	ns
$t_{sk(p)}$	Pulse skew (| t_{PLH} – t_{PHL} |)			0.3	1	ns
t_r	Differential output signal rise time		4	7.5	11	ns
t_f	Differential output signal fall time		4	7.5	11	ns
t_{PZH}	Propagation delay time, high-impedance-to-high-level output	R_L = 110 Ω, See 図 6-4		12	22	ns
t_{PZL}	Propagation delay time, high-impedance-to-low-level output	R_L = 110 Ω, See 図 6-5		12	22	ns
t_{PHZ}	Propagation delay time, high-level-to-high-impedance output	R_L = 110 Ω, See 図 6-4		12	22	ns
t_{PLZ}	Propagation delay time, low-level-to-high-impedance output	R_L = 110 Ω, See 図 6-5		12	22	ns

5.7 Receiver Electrical Characteristics

over recommended operating conditions (unless otherwise noted)

PARAMETER		TEST CONDITIONS		MIN	TYP(1)	MAX	UNIT
V_{IT+}	Positive-going input threshold voltage	I_O = –8 mA				0.2	V
V_{IT-}	Negative-going input threshold voltage	I_O = 8 mA		–0.2			V
V_{hys}	Hysteresis voltage (V_{IT+} – V_{IT-})				50		mV
V_{IK}	Enable-input clamp voltage	I_I = –18 mA		–1.5	–0.8		V
V_{OH}	High-level output voltage	V_{ID} = 200 mV, I_{OH} = –8 mA		4	4.9		V
V_{OL}	Low-level output voltage	V_{ID} = –200 mV, I_{OL} = 8 mA			0.1	0.8	V
I_{OZ}	High-impedance-state output current	V_O = 0 V to V_{CC}		–1		1	µA
I_{IH}	High-level enable-input current	V_{IH} = 2.4 V		–100			µA
I_{IL}	Low-level enable-input current	V_{IL} = 0.4 V		–100			µA
I_I	Bus input current	V_I = 12 V, V_{CC} = 5 V	Other input at 0 V		0.4	1	mA
		V_I = 12 V, V_{CC} = 0			0.5	1	
		V_I = –7 V, V_{CC} = 5 V		–0.8	–0.4		
		V_I = –7 V, V_{CC} = 0		–0.8	–0.3		
I_{CC}	Supply current	V_I = 0 or V_{CC}, No load	Receiver enabled and driver disabled		4.5	7.5	mA
			Receiver disabled and driver disabled		0.5	1	
			Receiver enabled and driver enabled		8.5	15	

(1) All typical values are at V_{CC} = 5 V and T_A = 25°C.

Copyright © 2023 Texas Instruments Incorporated

5.8 Receiver Switching Characteristics

over recommended operating conditions (unless otherwise noted)

PARAMETER		TEST CONDITIONS	MIN	TYP	MAX	UNIT
t_{PLH}	Propagation delay time, low-to-high-level output	V_{ID} = –1.5 V to 1.5 V, See 図 6-7	7	13	20	ns
t_{PHL}	Propagation delay time, high-to-low-level output		7	13	20	ns
$t_{sk(p)}$	Pulse skew (| t_{PHL} – t_{PLH} |)			0.5	1.5	ns
t_r	Output signal rise time			2.1	3.3	ns
t_f	Output signal fall time	See 図 6-7		2.1	3.3	ns
t_{PZH}	Output enable time to high level	C_L = 10 pF, See 図 6-8		30	45	ns
t_{PZL}	Output enable time to low level			30	45	ns
t_{PHZ}	Output disable time from high level			20	40	ns
t_{PLZ}	Output disable time from low level			20	40	ns

Typical Characteristics

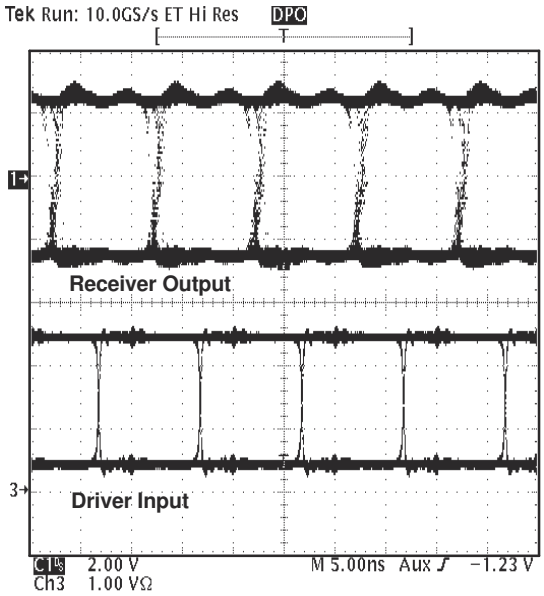

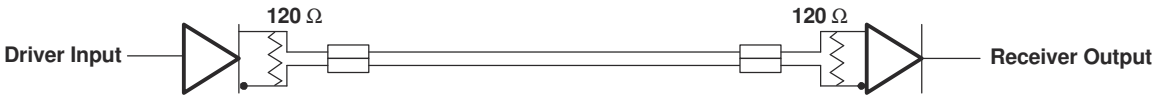

図 5-1. Typical Waveform of Nonreturn-to-Zero (NRZ), Pseudorandom Binary Sequence (PRBS) Data at 100 Mbps Through 15m, of CAT 5 Unshielded Twisted Pair (UTP) Cable

TIA/EIA-485-A defines a maximum signaling rate as that in which the transition time of the voltage transition of a logic-state change remains less than or equal to 30% of the bit length. Transition times of greater length perform quite well even though they do not meet the standard by definition.

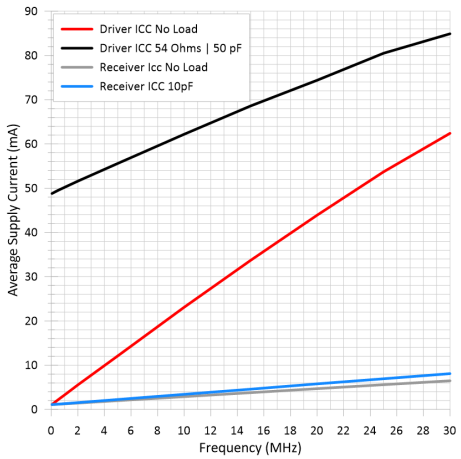

図 5-2. Average Supply Current vs Frequency

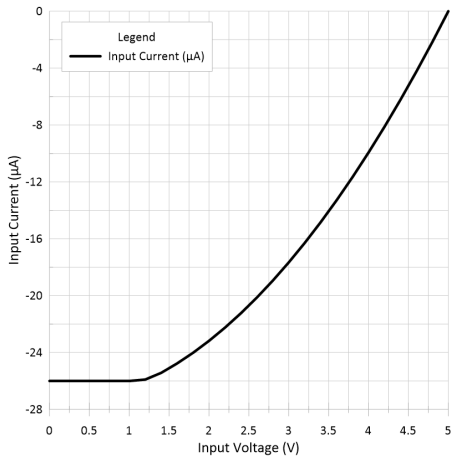

図 5-3. Logic Input Current vs Input Voltage

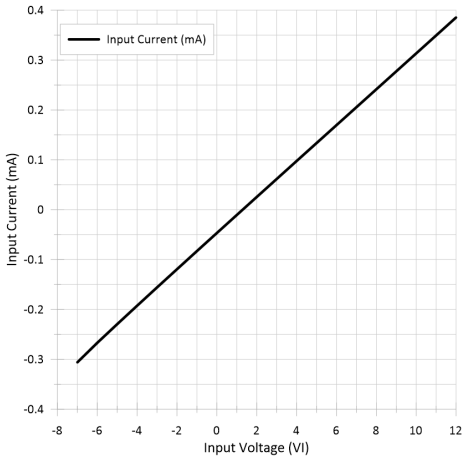

図 5-4. Bus Input Current vs Input Voltage

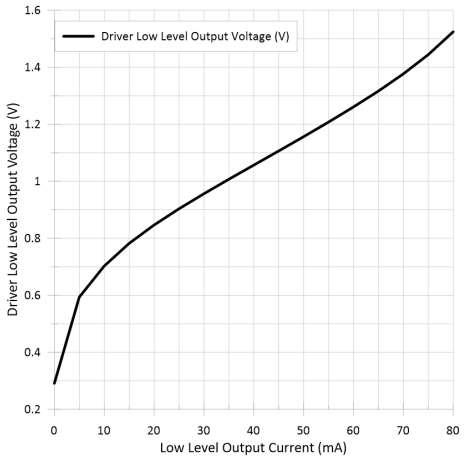

図 5-5. Driver Low-Level Output Voltage vs Low-Level Output Current

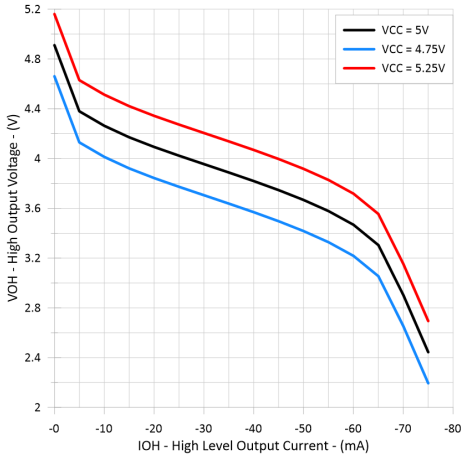

図 5-6. Driver High-Level Output Voltage vs High-Level Output Current

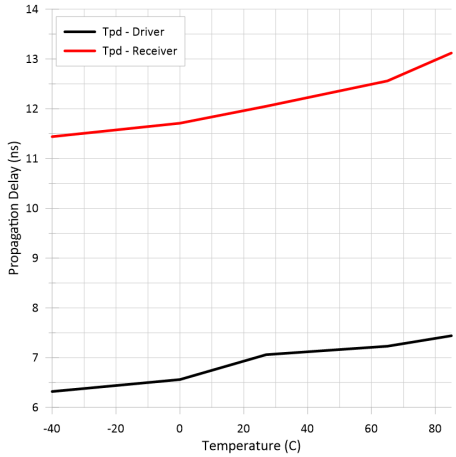

図 5-7. Propagation Delay Time vs Case Temperature

Copyright © 2023 Texas Instruments Incorporated

Parameter Measurement Information

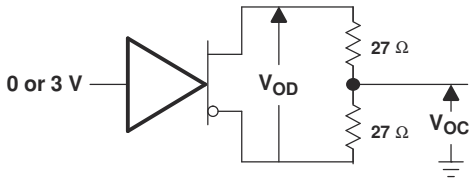

図 6-1. Driver V_{OD} and V_{OC}

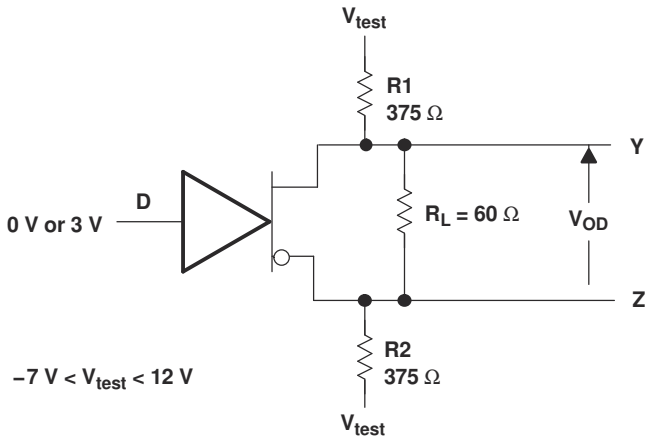

図 6-2. Driver V_{OD}

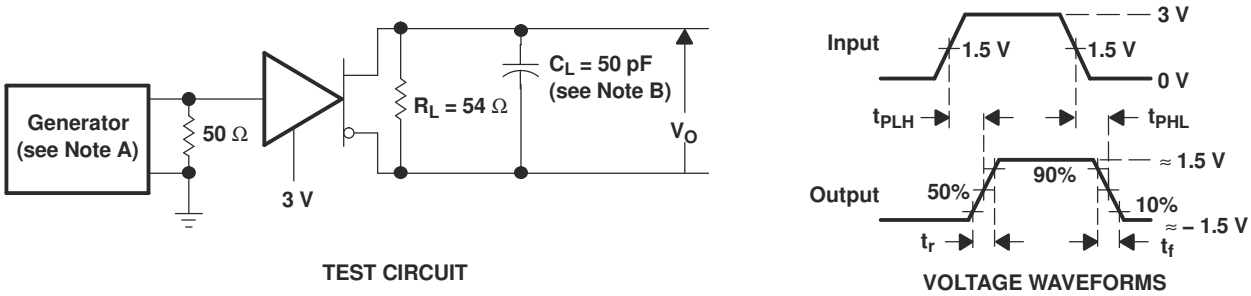

A. The input pulse is supplied by a generator having the following characteristics: PRR ≤ 1 MHz, 50% duty cycle, t_r ≤ 6 ns, t_f ≤ 6 ns, Z_O = 50 Ω.

B. C_L includes probe and jig capacitance.

図 6-3. Driver Test Circuit and Voltage Waveforms

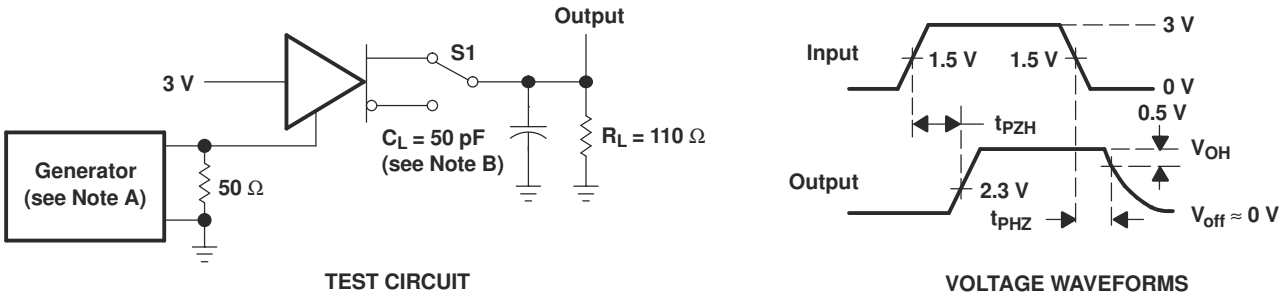

A. The input pulse is supplied by a generator having the following characteristics: PRR ≤ 1 MHz, 50% duty cycle, t_r ≤ 6 ns, t_f ≤ 6 ns, Z_O = 50 Ω.

B. C_L includes probe and jig capacitance.

図 6-4. Driver Test Circuit and Voltage Waveforms

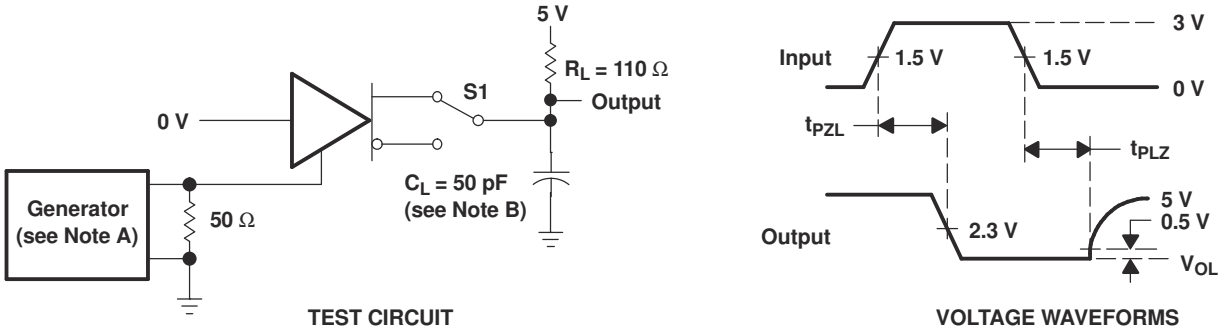

A. The input pulse is supplied by a generator having the following characteristics: PRR ≤ 1 MHz, 50% duty cycle, t_r ≤ 6 ns, t_f ≤ 6 ns, Z_O = 50 Ω.

B. C_L includes probe and jig capacitance.

図 6-5. Driver Test Circuit and Voltage Waveforms

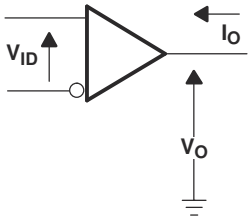

図 6-6. Receiver V_{OH} and V_{OL}

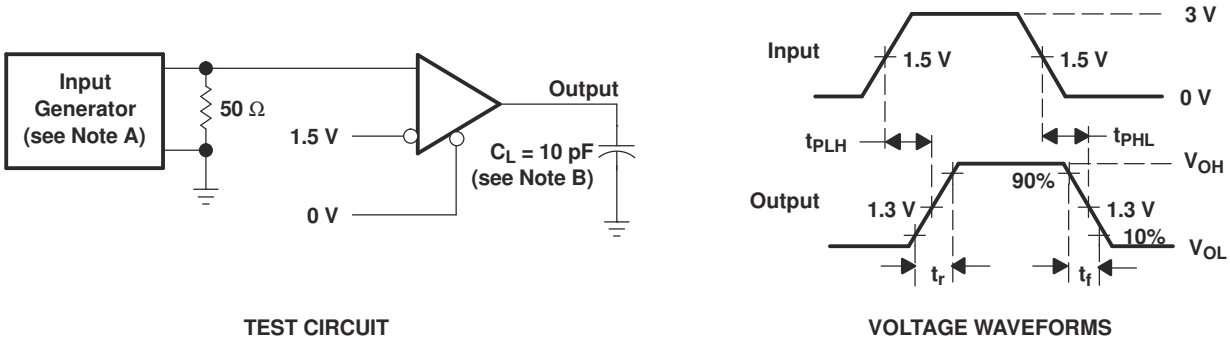

A. The input pulse is supplied by a generator having the following characteristics: PRR ≤ 1 MHz, 50% duty cycle, t_r ≤ 6 ns, t_f ≤ 6 ns, Z_O = 50 Ω.

B. C_L includes probe and jig capacitance.

図 6-7. Receiver Test Circuit and Voltage Waveforms

Copyright © 2023 Texas Instruments Incorporated

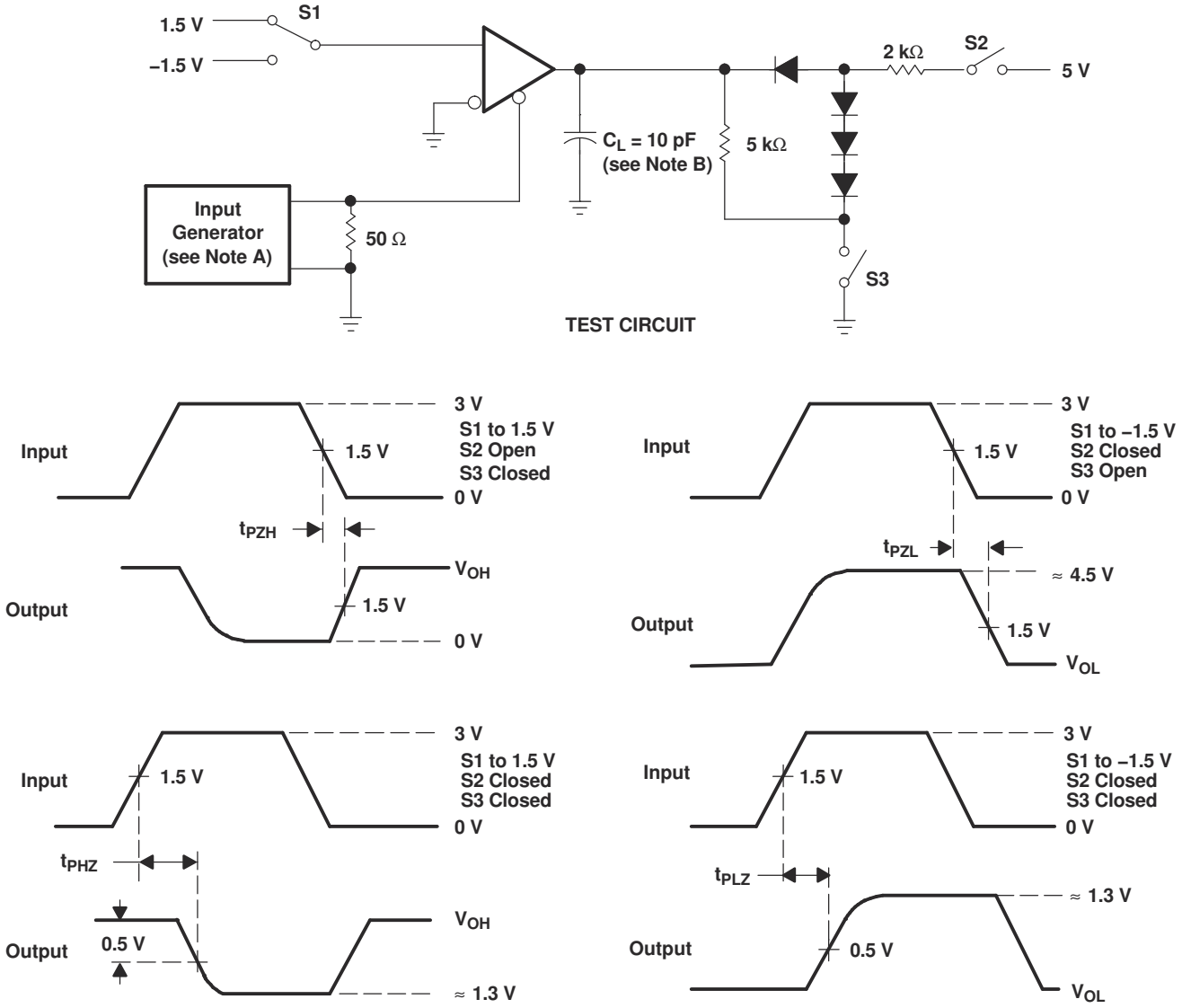

VOLTAGE WAVEFORMS

A. The input pulse is supplied by a generator having the following characteristics: PRR ≤ 1 MHz, 50% duty cycle, t_r ≤ 6 ns, t_f ≤ 6 ns, Z_O = 50 Ω.

B. C_L includes probe and jig capacitance.

図 6-8. Receiver Output Enable and Disable Times

6 Detailed Description

6.1 Device Functional Modes

6.1.1 Functional Tables

DRIVER[1]				RECEIVER		
INPUT D	ENABLE DE	OUTPUTS		DIFFERENTIAL INPUTS A – B	ENABLE $\overline{RE}$	OUTPUT R
		Y	Z	$V_{ID} \geq 0.2$ V	L	H
H	H	H	L	-0.2 V < V_{ID} < 0.2 V	L	?
L	H	L	H	$V_{ID} \leq -0.2$ V	L	L
X	L	Z	Z	X	H	Z
OPEN	H	H	L	Open circuit	L	H

(1) H = high level, L = low level, ? = indeterminate, X = irrelevant, Z = high impedance (off)

6.1.2 Schematics of Inputs and Outputs

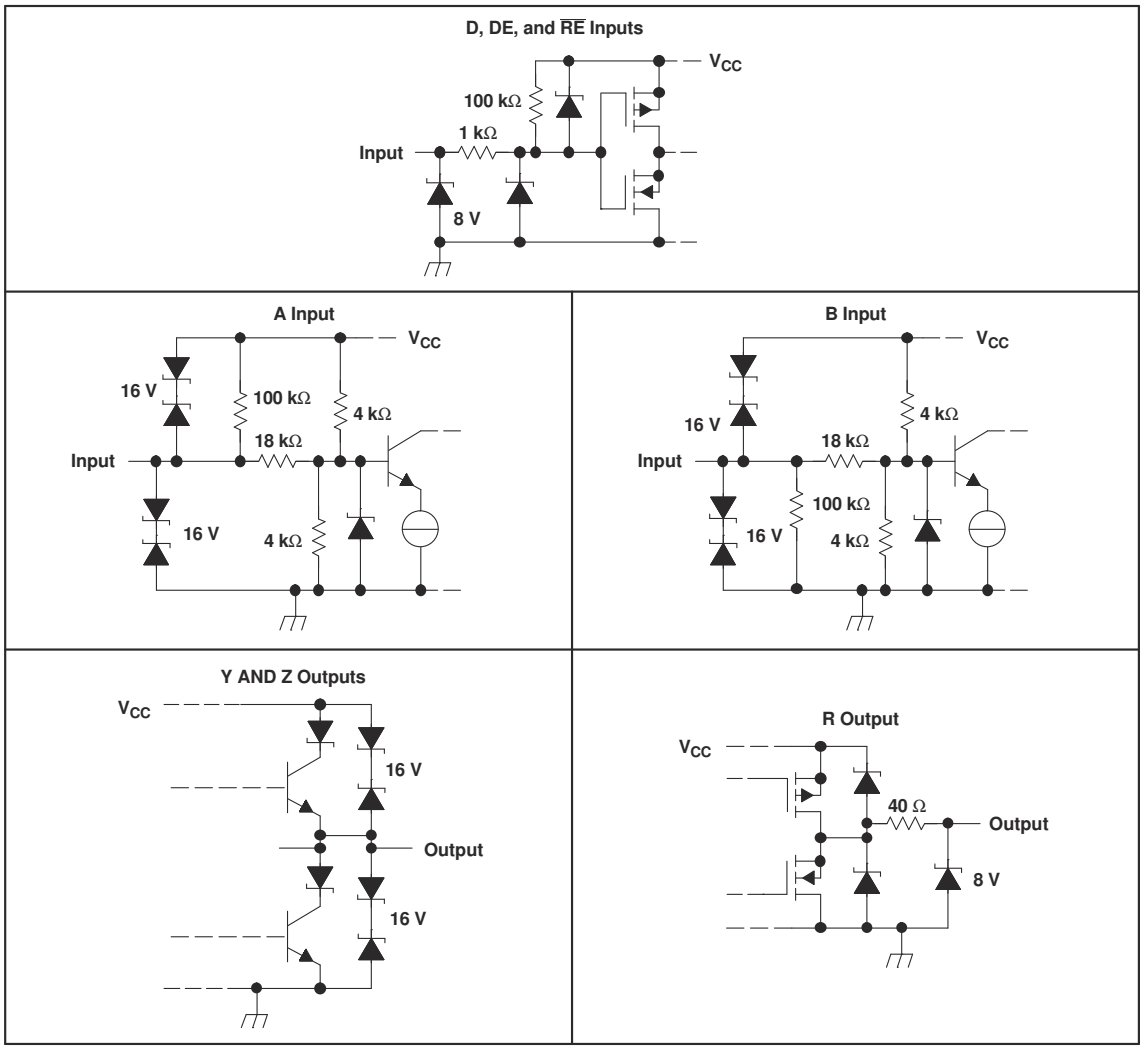

Copyright © 2023 Texas Instruments Incorporated

7 Application Information

7.1 Typical Application Circuit

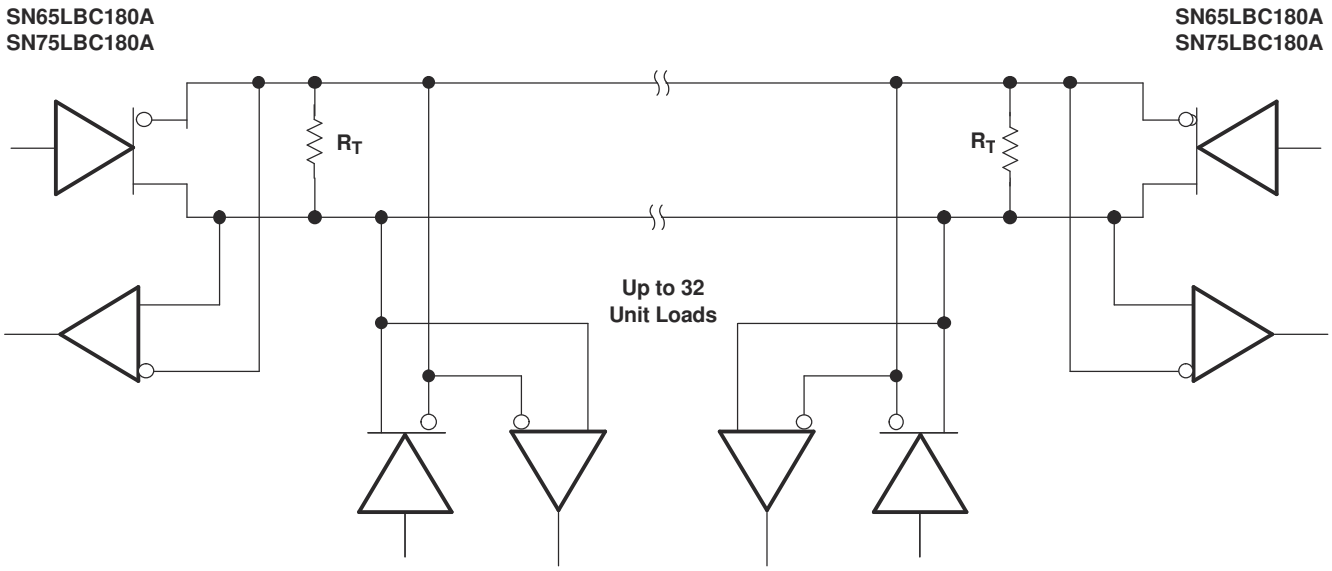

A. The line should be terminated at both ends in its characteristic impedance ($R_T = Z_O$). Stub lengths off the main line should be kept as short as possible. One SN65LBC180A typically represents less than one unit load.

8 Device and Documentation Support

8.1 ドキュメントの更新通知を受け取る方法

ドキュメントの更新についての通知を受け取るには、ti.com のデバイス製品フォルダを開いてください。「更新の通知を受け取る」をクリックして登録すると、変更されたすべての製品情報に関するダイジェストを毎週受け取れます。変更の詳細については、修正されたドキュメントに含まれている改訂履歴をご覧ください。

8.2 サポート・リソース

TI E2E™ サポート・フォーラムは、エンジニアが検証済みの回答と設計に関するヒントをエキスパートから迅速かつ直接得ることができる場所です。既存の回答を検索したり、独自の質問をしたりすることで、設計で必要な支援を迅速に得ることができます。

リンクされているコンテンツは、該当する貢献者により、現状のまま提供されるものです。これらは TI の仕様を構成するものではなく、必ずしも TI の見解を反映したものではありません。TI の使用条件を参照してください。

8.3 商標

LinBICMOS™ and TI E2E™ are trademarks of Texas Instruments.
すべての商標は、それぞれの所有者に帰属します。

8.4 静電気放電に関する注意事項

この IC は、ESD によって破損する可能性があります。テキサス・インスツルメンツは、IC を取り扱う際には常に適切な注意を払うことを推奨します。正しい取り扱いおよび設置手順に従わない場合、デバイスを破損するおそれがあります。

ESD による破損は、わずかな性能低下からデバイスの完全な故障まで多岐にわたります。精密な IC の場合、パラメータがわずかに変化するだけで公表されている仕様から外れる可能性があるため、破損が発生しやすくなっています。

8.5 用語集

テキサス・インスツルメンツ用語集　　この用語集には、用語や略語の一覧および定義が記載されています。

9 Mechanical, Packaging, and Orderable Information

The following pages include mechanical, packaging, and orderable information. This information is the most current data available for the designated devices. This data is subject to change without notice and revision of this document. For browser-based versions of this data sheet, refer to the left-hand navigation.

Copyright © 2023 Texas Instruments Incorporated

PACKAGING INFORMATION

Orderable part number	Status (1)	Material type (2)	Package | Pins	Package qty | Carrier	RoHS (3)	Lead finish/ Ball material (4)	MSL rating/ Peak reflow (5)	Op temp (°C)	Part marking (6)
SN65LBC180ADR	Active	Production	SOIC (D) | 14	2500 | LARGE T&R	Yes	NIPDAU	Level-1-260C-UNLIM	-40 to 85	BL180A
SN65LBC180ADR.A	Active	Production	SOIC (D) | 14	2500 | LARGE T&R	Yes	NIPDAU	Level-1-260C-UNLIM	-40 to 85	BL180A
SN65LBC180ADRG4	Active	Production	SOIC (D) | 14	2500 | LARGE T&R	Yes	NIPDAU	Level-1-260C-UNLIM	-40 to 85	BL180A
SN65LBC180ADRG4.A	Active	Production	SOIC (D) | 14	2500 | LARGE T&R	Yes	NIPDAU	Level-1-260C-UNLIM	-40 to 85	BL180A
SN65LBC180AN	Active	Production	PDIP (N) | 14	25 | TUBE	Yes	NIPDAU	N/A for Pkg Type	-40 to 85	65LBC180A
SN65LBC180AN.A	Active	Production	PDIP (N) | 14	25 | TUBE	Yes	NIPDAU	N/A for Pkg Type	-40 to 85	65LBC180A
SN75LBC180AN	Active	Production	PDIP (N) | 14	25 | TUBE	Yes	NIPDAU	N/A for Pkg Type	0 to 70	75LBC180A
SN75LBC180AN.A	Active	Production	PDIP (N) | 14	25 | TUBE	Yes	NIPDAU	N/A for Pkg Type	0 to 70	75LBC180A

(1) **Status:** For more details on status, see our product life cycle.

(2) **Material type:** When designated, preproduction parts are prototypes/experimental devices, and are not yet approved or released for full production. Testing and final process, including without limitation quality assurance, reliability performance testing, and/or process qualification, may not yet be complete, and this item is subject to further changes or possible discontinuation. If available for ordering, purchases will be subject to an additional waiver at checkout, and are intended for early internal evaluation purposes only. These items are sold without warranties of any kind.

(3) **RoHS values:** Yes, No, RoHS Exempt. See the TI RoHS Statement for additional information and value definition.

(4) **Lead finish/Ball material:** Parts may have multiple material finish options. Finish options are separated by a vertical ruled line. Lead finish/Ball material values may wrap to two lines if the finish value exceeds the maximum column width.

(5) **MSL rating/Peak reflow:** The moisture sensitivity level ratings and peak solder (reflow) temperatures. In the event that a part has multiple moisture sensitivity ratings, only the lowest level per JEDEC standards is shown. Refer to the shipping label for the actual reflow temperature that will be used to mount the part to the printed circuit board.

(6) **Part marking:** There may be an additional marking, which relates to the logo, the lot trace code information, or the environmental category of the part.

Multiple part markings will be inside parentheses. Only one part marking contained in parentheses and separated by a "~" will appear on a part. If a line is indented then it is a continuation of the previous line and the two combined represent the entire part marking for that device.

Important Information and Disclaimer: The information provided on this page represents TI's knowledge and belief as of the date that it is provided. TI bases its knowledge and belief on information provided by third parties, and makes no representation or warranty as to the accuracy of such information. Efforts are underway to better integrate information from third parties. TI has taken and continues to take reasonable steps to provide representative and accurate information but may not have conducted destructive testing or chemical analysis on incoming materials and chemicals. TI and TI suppliers consider certain information to be proprietary, and thus CAS numbers and other limited information may not be available for release.

In no event shall TI's liability arising out of such information exceed the total purchase price of the TI part(s) at issue in this document sold by TI to Customer on an annual basis.

TAPE AND REEL INFORMATION

REEL DIMENSIONS

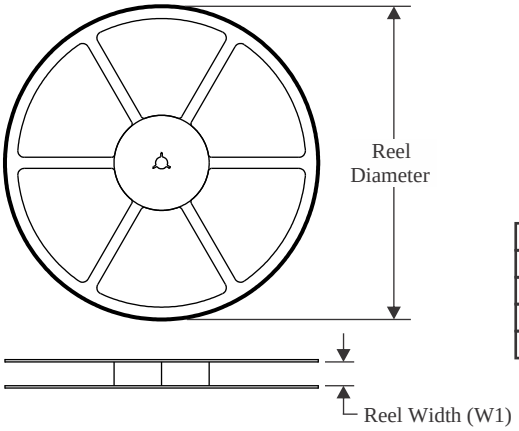

TAPE DIMENSIONS

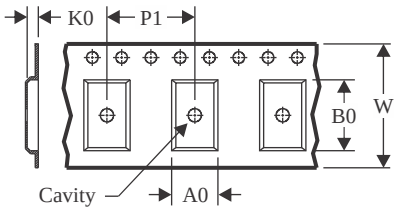

A0	Dimension designed to accommodate the component width
B0	Dimension designed to accommodate the component length
K0	Dimension designed to accommodate the component thickness
W	Overall width of the carrier tape
P1	Pitch between successive cavity centers

QUADRANT ASSIGNMENTS FOR PIN 1 ORIENTATION IN TAPE

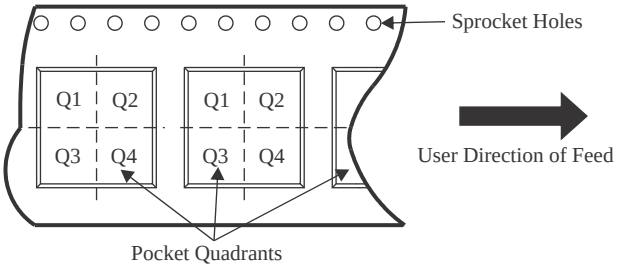

*All dimensions are nominal

Device	Package Type	Package Drawing	Pins	SPQ	Reel Diameter (mm)	Reel Width W1 (mm)	A0 (mm)	B0 (mm)	K0 (mm)	P1 (mm)	W (mm)	Pin1 Quadrant
SN65LBC180ADR	SOIC	D	14	2500	330.0	16.4	6.5	9.0	2.1	8.0	16.0	Q1
SN65LBC180ADRG4	SOIC	D	14	2500	330.0	16.4	6.5	9.0	2.1	8.0	16.0	Q1

TAPE AND REEL BOX DIMENSIONS

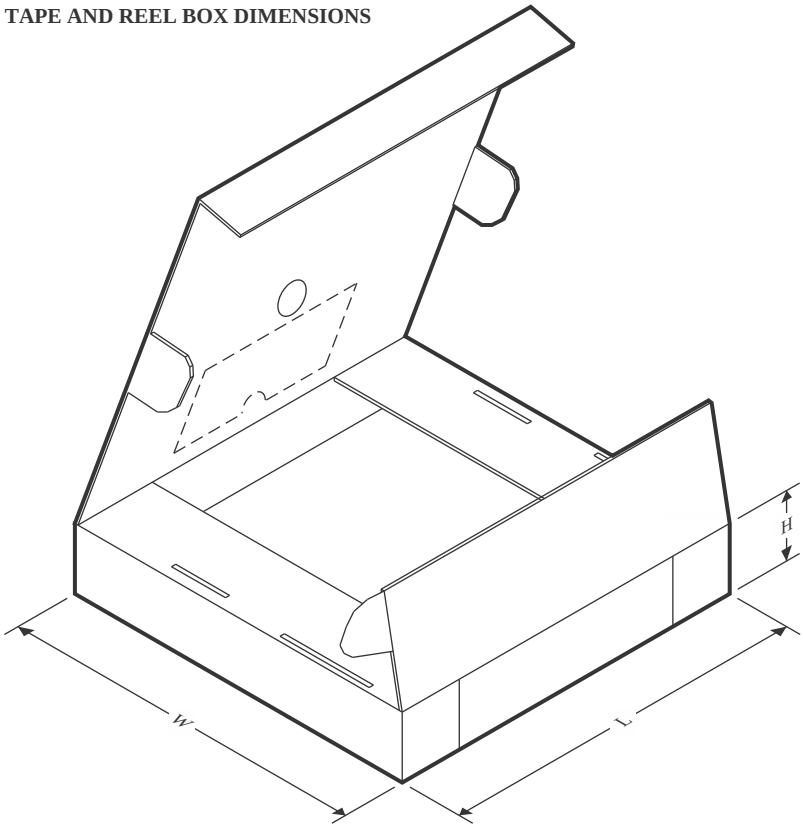

*All dimensions are nominal

Device	Package Type	Package Drawing	Pins	SPQ	Length (mm)	Width (mm)	Height (mm)
SN65LBC180ADR	SOIC	D	14	2500	340.5	336.1	32.0
SN65LBC180ADRG4	SOIC	D	14	2500	353.0	353.0	32.0

TUBE

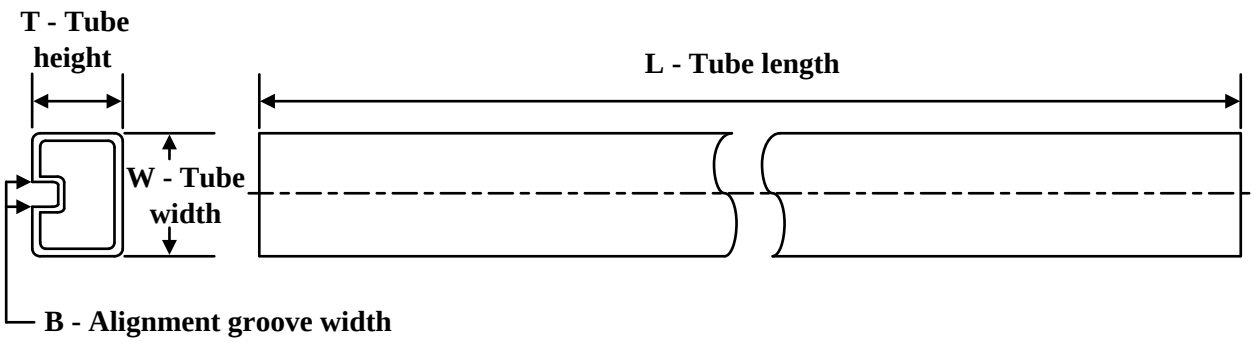

*All dimensions are nominal

Device	Package Name	Package Type	Pins	SPQ	L (mm)	W (mm)	T (µm)	B (mm)
SN65LBC180AN	N	PDIP	14	25	506	13.97	11230	4.32
SN65LBC180AN.A	N	PDIP	14	25	506	13.97	11230	4.32
SN75LBC180AN	N	PDIP	14	25	506	13.97	11230	4.32
SN75LBC180AN.A	N	PDIP	14	25	506	13.97	11230	4.32

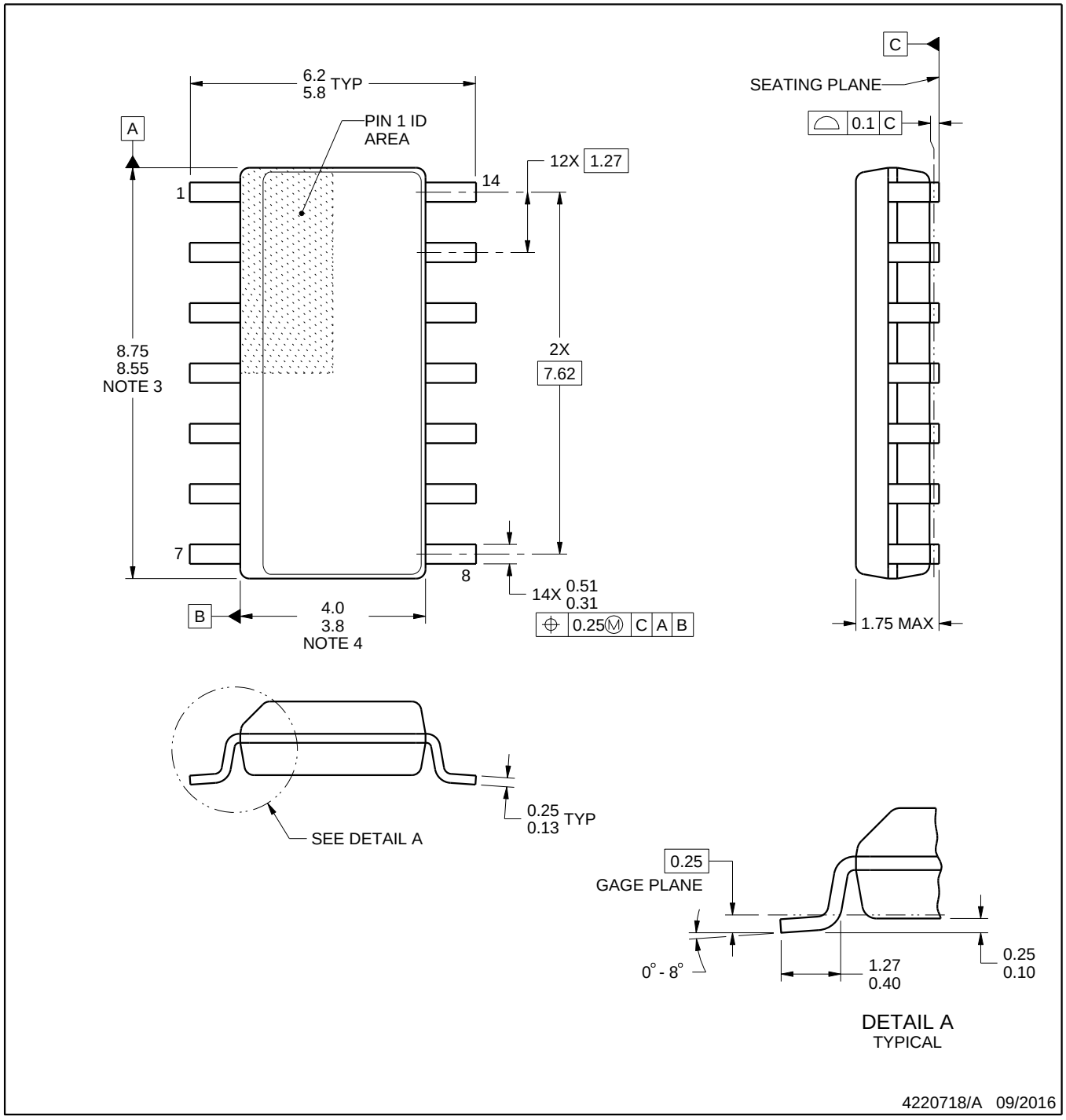

NOTES:

1. All linear dimensions are in millimeters. Dimensions in parenthesis are for reference only. Dimensioning and tolerancing per ASME Y14.5M.
2. This drawing is subject to change without notice.
3. This dimension does not include mold flash, protrusions, or gate burrs. Mold flash, protrusions, or gate burrs shall not exceed 0.15 mm, per side.
4. This dimension does not include interlead flash. Interlead flash shall not exceed 0.43 mm, per side.
5. Reference JEDEC registration MS-012, variation AB.

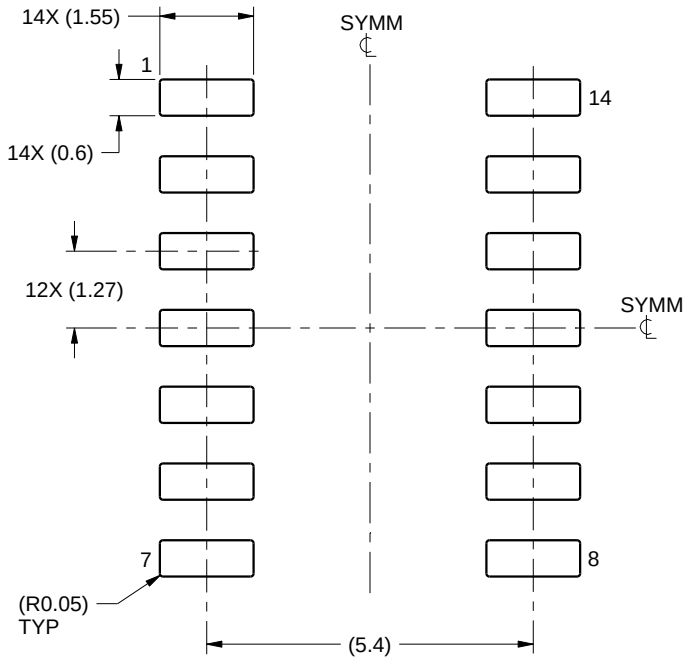

LAND PATTERN EXAMPLE
SCALE:8X

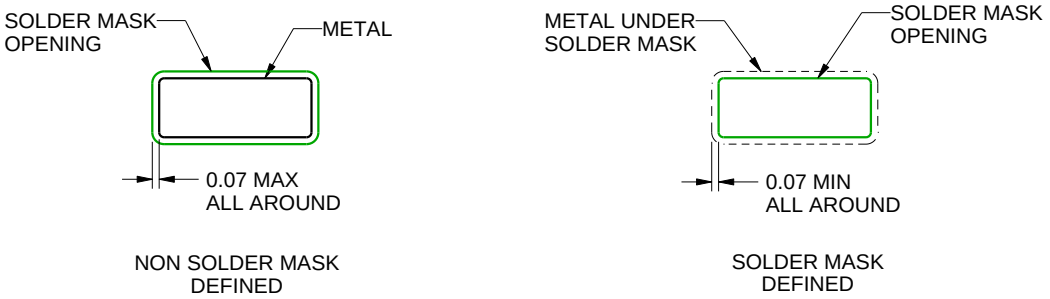

SOLDER MASK DETAILS

4220718/A 09/2016

NOTES: (continued)

6. Publication IPC-7351 may have alternate designs.
7. Solder mask tolerances between and around signal pads can vary based on board fabrication site.

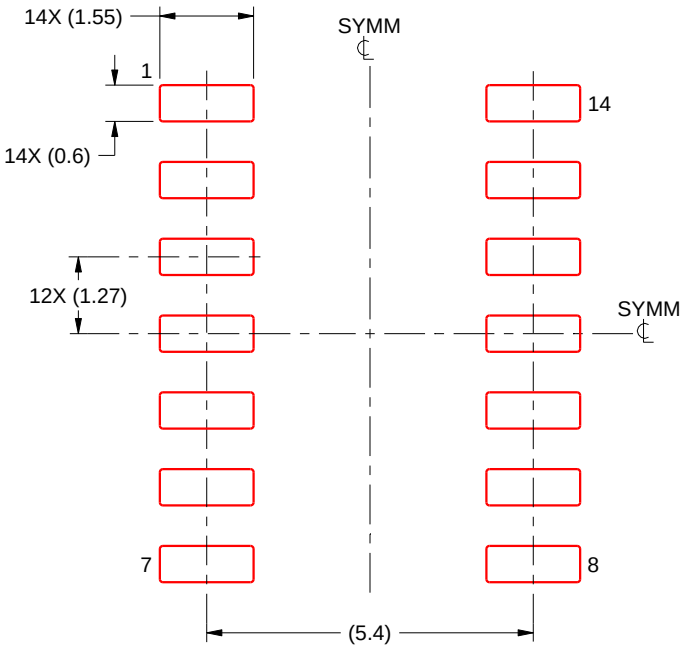

SOLDER PASTE EXAMPLE
BASED ON 0.125 mm THICK STENCIL
SCALE:8X

4220718/A 09/2016

NOTES: (continued)

8. Laser cutting apertures with trapezoidal walls and rounded corners may offer better paste release. IPC-7525 may have alternate design recommendations.
9. Board assembly site may have different recommendations for stencil design.

N (R–PDIP–T**) PLASTIC DUAL–IN–LINE PACKAGE

16 PINS SHOWN

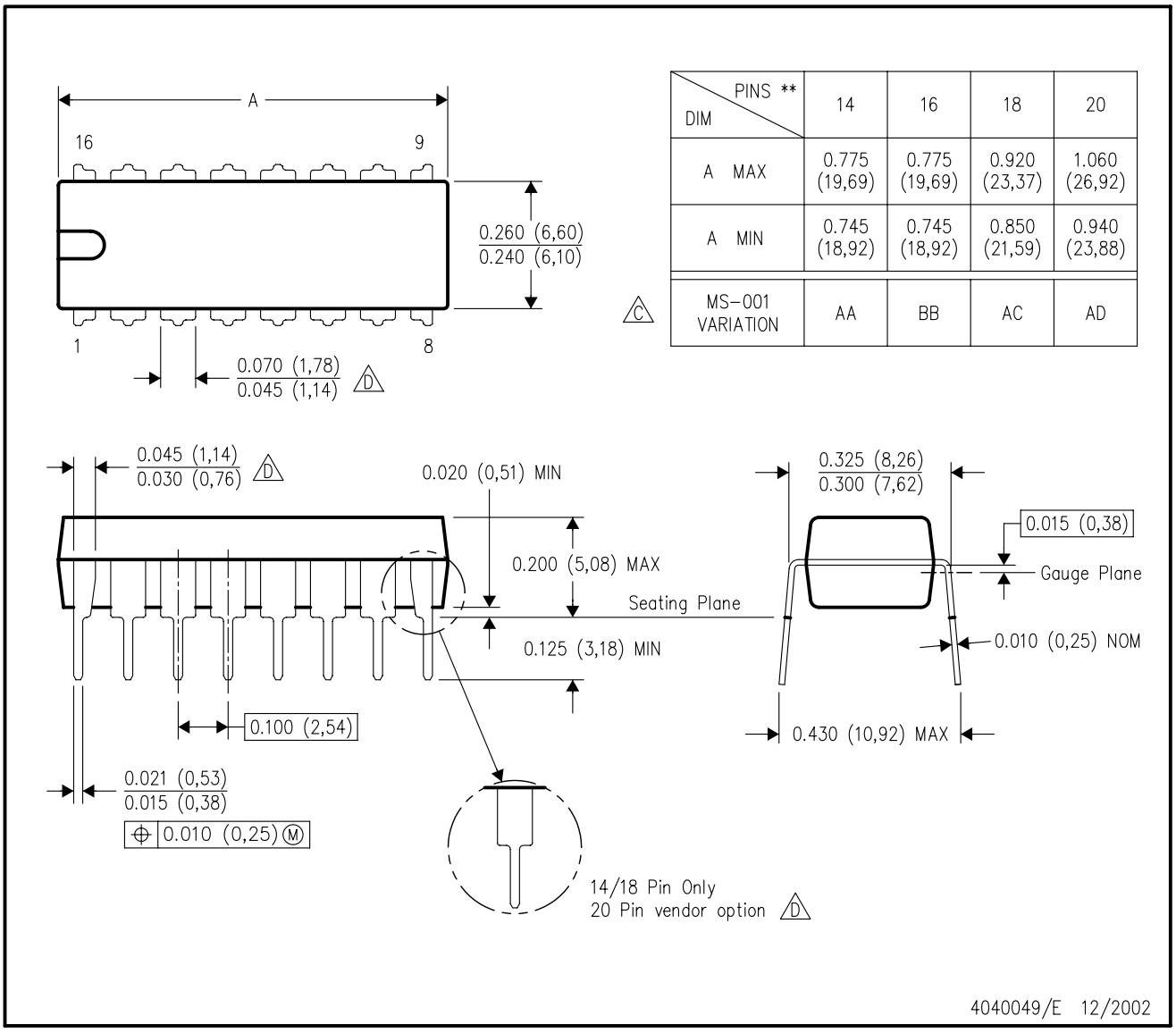

DIM \ PINS **	14	16	18	20
A MAX	0.775 (19,69)	0.775 (19,69)	0.920 (23,37)	1.060 (26,92)
A MIN	0.745 (18,92)	0.745 (18,92)	0.850 (21,59)	0.940 (23,88)
MS–001 VARIATION (C)	AA	BB	AC	AD

NOTES:
A. All linear dimensions are in inches (millimeters).
B. This drawing is subject to change without notice.
C. Falls within JEDEC MS–001, except 18 and 20 pin minimum body length (Dim A).
D. The 20 pin end lead shoulder width is a vendor option, either half or full width.

重要なお知らせと免責事項

TI は、技術データと信頼性データ (データシートを含みます)、設計リソース (リファレンス デザインを含みます)、アプリケーションや設計に関する各種アドバイス、Web ツール、安全性情報、その他のリソースを、欠陥が存在する可能性のある「現状のまま」提供しており、商品性および特定目的に対する適合性の黙示保証、第三者の知的財産権の非侵害保証を含むいかなる保証も、明示的または黙示的にかかわらず拒否します。

これらのリソースは、TI 製品を使用する設計の経験を積んだ開発者への提供を意図したものです。(1) お客様のアプリケーションに適した TI 製品の選定、(2) お客様のアプリケーションの設計、検証、試験、(3) お客様のアプリケーションに該当する各種規格や、その他のあらゆる安全性、セキュリティ、規制、または他の要件への確実な適合に関する責任を、お客様のみが単独で負うものとします。

上記の各種リソースは、予告なく変更される可能性があります。これらのリソースは、リソースで説明されている TI 製品を使用するアプリケーションの開発の目的でのみ、TI はその使用をお客様に許諾します。これらのリソースに関して、他の目的で複製することや掲載することは禁止されています。TI や第三者の知的財産権のライセンスが付与されている訳ではありません。お客様は、これらのリソースを自身で使用した結果発生するあらゆる申し立て、損害、費用、損失、責任について、TI およびその代理人を完全に補償するものとし、TI は一切の責任を拒否します。

TI の製品は、 TI の販売条件 、 TI の総合的な品質ガイドライン 、 ti.com または TI 製品などに関連して提供される他の適用条件に従い提供されます。TI がこれらのリソースを提供することは、適用される TI の保証または他の保証の放棄の拡大や変更を意味するものではありません。 TI がカスタム、またはカスタマー仕様として明示的に指定していない限り、TI の製品は標準的なカタログに掲載される汎用機器です。

お客様がいかなる追加条項または代替条項を提案する場合も、TI はそれらに異議を唱え、拒否します。

Copyright © 2025, Texas Instruments Incorporated

最終更新日：2025 年 10 月