SN74AXCH4T245 構成可能な電圧変換、Tri-State 出力、バス・ホールド入力を搭載した 4 ビット・バス・トランシーバ

1 特長

- 完全に構成可能なデュアル・レール設計により、各ポートは 0.65V～3.6V の範囲の電源電圧で動作可能
- データ入力時のバス・ホールドにより、外付けのプルアップまたはプルダウン抵抗が不要
- 動作温度範囲：-40℃～+125℃
- 複数の方向制御ピンにより、昇圧と降圧の変換を同時に実行
- グリッチの発生しない電源シーケンシング
- 最高 380Mbps をサポート (1.8V から 3.3V への変換時)
- V_{CC} 絶縁機能
- I_{off} により部分的パワーダウン・モード動作をサポート
- AVC ファミリのレベル・シフトと互換
- JESD 78, Class II 準拠で 100mA 超のラッチアップ性能
- JESD 22 を超える ESD 保護
  - 人体モデルで 8000V
  - 荷電デバイス・モデルで 1000V

2 アプリケーション

- エンタープライズおよび通信
- 産業用
- パーソナル・エレクトロニクス
- ワイヤレス・インフラ
- ビルディング・オートメーション

3 概要

SN74AXCH4T245 は、別々に構成可能な 2 つの電源レールを使用した、4 ビットの非反転バス・トランシーバです。このデバイスは、V_{CCA} 電源と V_{CCB} 電源の両方が最低 0.65V で動作します。A ポートは V_{CCA} (0.65V～3.6V の任意の電源電圧に対応) に追従するよう設計されています。同様に、B ポートは V_{CCB} (0.65V～3.6V の任意の電源電圧に対応) に追従するよう設計されています。SN74AXCH4T245 は単一電源システムにも対応しています。

SN74AXCH4T245 デバイスは、データ・バス間の非同期通信用に設計されており、方向制御入力 (1DIR および 2DIR) の論理レベルに応じて、A バスから B バスへ、または B バスから A バスへデータを送信します。出力イネーブル入力 (1$\overline{OE}$ および 2$\overline{OE}$) を使用すると、出力をディセーブルにして、バスを実質的に絶縁できます。すべての制御ピン (xDIR および x$\overline{OE}$) は V_{CCA} を基準としています。

アクティブなバス・ホールド回路により、使用されていない、または駆動されていない入力を有効なロジック状態に保持します。プルアップまたはプルダウン抵抗とバス・ホールド回路との併用は推奨しません。V_{CCA} または V_{CCB} に電源が存在する場合、方向制御または出力イネーブル・ピンの状態とは関係なく、バス・ホールド回路はそれぞれ A または B 入力でアクティブ状態を維持します。

電源オンまたは電源オフ時にレベル・シフタ I/O が確実に高インピーダンス状態になるように、プルアップ抵抗を経由して x$\overline{OE}$ ピンを V_{CCA} に接続する必要があります。

製品情報(1)

型番	パッケージ	本体サイズ(公称)
SN74AXCH4T245PW	TSSOP (16)	5.00mm×4.40mm
SN74AXCH4T245RSV	UQFN (16)	2.60mm×1.80mm

(1) 利用可能なすべてのパッケージについては、このデータシートの末尾にある注文情報を参照してください。

機能ブロック図

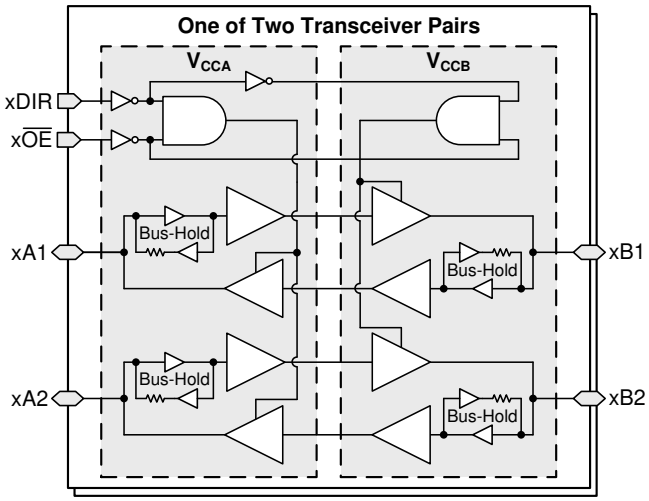

Note: Bus-hold circuits are only present for data inputs, not control inputs

英語版のTI製品についての情報を翻訳したこの資料は、製品の概要を確認する目的で便宜的に提供しているものです。該当する正式な英語版の最新情報は、www.ti.comで閲覧でき、その内容が常に優先されます。TIでは翻訳の正確性および妥当性につきましては一切保証いたしません。実際の設計などの前には、必ず最新版の英語版をご参照くださいますようお願いいたします。

目次

1 特長 ... 1
2 アプリケーション ... 1
3 概要 ... 1
4 改訂履歴 ... 2
5 概要（続き） ... 3
6 **Pin Configuration and Functions** ... 4
7 **Specifications** ... 5
7.1 Absolute Maximum Ratings ... 5
7.2 ESD Ratings ... 5
7.3 Recommended Operating Conditions ... 6
7.4 Thermal Information ... 6
7.5 Electrical Characteristics ... 7
7.6 Switching Characteristics, V_{CCA} = 0.7 ± 0.05 V ... 9
7.7 Switching Characteristics, V_{CCA} = 0.8 ± 0.04 V ... 10
7.8 Switching Characteristics, V_{CCA} = 0.9 ± 0.045 V ... 11
7.9 Switching Characteristics, V_{CCA} = 1.2 ± 0.1 V ... 12
7.10 Switching Characteristics, V_{CCA} = 1.5 ± 0.1 V ... 13
7.11 Switching Characteristics, V_{CCA} = 1.8 ± 0.15 V ... 14
7.12 Switching Characteristics, V_{CCA} = 2.5 ± 0.2 V ... 15
7.13 Switching Characteristics, V_{CCA} = 3.3 ± 0.3 V ... 16
7.14 Operating Characteristics: T_A = 25°C ... 17
7.15 Typical Characteristics ... 19
8 **Parameter Measurement Information** ... 20
8.1 Load Circuit and Voltage Waveforms ... 20
9 **Detailed Description** ... 22
9.1 Overview ... 22
9.2 Functional Block Diagram ... 22
9.3 Feature Description ... 22
9.4 Device Functional Modes ... 24
10 **Application and Implementation** ... 25
10.1 Application Information ... 25
10.2 Typical Application ... 25
11 **Power Supply Recommendations** ... 27
12 **Layout** ... 27
12.1 Layout Guidelines ... 27
12.2 Layout Example ... 27
13 デバイスおよびドキュメントのサポート ... 28
13.1 関連資料 ... 28
13.2 ドキュメントの更新通知を受け取る方法 ... 28
13.3 コミュニティ・リソース ... 28
13.4 商標 ... 28
13.5 静電気放電に関する注意事項 ... 28
13.6 Glossary ... 28
14 メカニカル、パッケージ、および注文情報 ... 29

4 改訂履歴

日付	リビジョン	注
2019 年 3 月	*	初版

Copyright © 2019, Texas Instruments Incorporated

5 概要（続き）

このデバイスは、I_{off} 電流を使用する部分的パワーダウン・アプリケーション用に完全に動作が規定されています。I_{off} 保護回路により、電源オフ時に入力、出力、複合 I/O は指定の電圧にバイアスされ、それらとの間に過剰な電流が流れることはありません。

V_{CC} 絶縁機能により、V_{CCA} と V_{CCB} のどちらかが 100mV を下回ると、すべての I/O ポートは出力を無効にして高インピーダンス状態になります。

グリッチの発生しない電源シーケンシングにより、堅牢な電源シーケンシング性能が得られると同時に、どちらの電源レールも任意の順序で電源オン/オフできます。

Copyright © 2019, Texas Instruments Incorporated

6 Pin Configuration and Functions

PW Package
16-Pin TSSOP
Top View

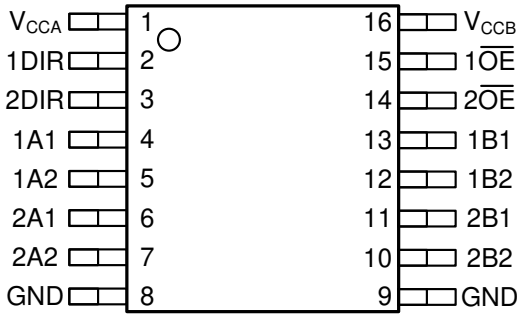

RSV Package
16-Pin UQFN
Transparent Top View

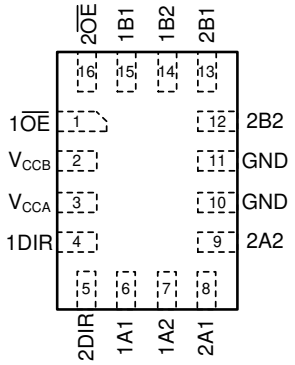

Pin Functions

PIN	NO.		TYPE	DESCRIPTION
NAME	PW	RSV		
1A1	4	6	I/O	Input/output 1A1. Referenced to V_{CCA}.
1A2	5	7	I/O	Input/output 1A2. Referenced to V_{CCA}.
1B1	13	15	I/O	Input/output 1B1. Referenced to V_{CCB}.
1B2	12	14	I/O	Input/output 1B2. Referenced to V_{CCB}.
1DIR	2	4	I	Direction-control input for ‘1’ ports
$1\overline{OE}$	15	1	I	Tri-state output-mode enable. Pull $\overline{OE}$ high to place ‘1’ outputs in tri-state mode. Referenced to V_{CCA}.
2A1	6	8	I/O	Input/output 2A1. Referenced to V_{CCA}.
2A2	7	9	I/O	Input/output 2A2. Referenced to V_{CCA}.
2B1	11	13	I/O	Input/output 2B1. Referenced to V_{CCB}.
2B2	10	12	I/O	Input/output 2B2. Referenced to V_{CCB}.
2DIR	3	5	I	Direction-control input for ‘2’ ports
$2\overline{OE}$	14	16	I	Tri-state output-mode enable. Pull $\overline{OE}$ high to place ‘2’ outputs in tri-state mode. Referenced to V_{CCA}.
GND	8, 9	10, 11	—	Ground
V_{CCA}	1	3	—	A-port power supply voltage. 0.65 V ≤ V_{CCA} ≤ 3.6 V
V_{CCB}	16	2	—	B-port power supply voltage. 0.65 V ≤ V_{CCB} ≤ 3.6 V

Copyright © 2019, Texas Instruments Incorporated

7 Specifications

7.1 Absolute Maximum Ratings

over operating free-air temperature range (unless otherwise noted)[1]

			MIN	MAX	UNITS
V_{CCA}	Supply voltage A		–0.5	4.2	V
V_{CCB}	Supply voltage B		–0.5	4.2	V
V_I	Input Voltage[2]	I/O Ports (A Port)	–0.5	4.2	V
		I/O Ports (B Port)	–0.5	4.2	
		Control Inputs	–0.5	4.2	
V_O	Voltage applied to any output in the high-impedance or power-off state[2]	A Port	–0.5	4.2	V
		B Port	–0.5	4.2	
V_O	Voltage applied to any output in the high or low state[2][3]	A Port	–0.5	V_{CCA} + 0.2	V
		B Port	–0.5	V_{CCB} + 0.2	
I_{IK}	Input clamp current	$V_I < 0$	–50		mA
I_{OK}	Output clamp current	$V_O < 0$	–50		mA
I_O	Continuous output current		–50	50	mA
	Continuous current through V_{CC} or GND		–100	100	mA
T_j	Junction Temperature			150	°C
T_{stg}	Storage temperature		–65	150	°C

(1) Stresses beyond those listed under *Absolute Maximum Ratings* may cause permanent damage to the device. These are stress ratings only, which do not imply functional operation of the device at these or any other conditions beyond those indicated under *Recommended Operating Conditions.* Exposure to absolute-maximum-rated conditions for extended periods may affect device reliability.
(2) The input voltage and output negative-voltage ratings may be exceeded if the input and output current ratings are observed.
(3) The output positive-voltage rating may be exceeded up to 4.2 V maximum if the output current rating is observed.

7.2 ESD Ratings

			VALUE	UNIT
$V_{(ESD)}$	Electrostatic discharge	Human body model (HBM), per ANSI/ESDA/JEDEC JS-001[1]	±8000	V
		Charged device model (CDM), per JEDEC specification JESD22-C101[2]	±1000	

(1) JEDEC document JEP155 states that 500-V HBM allows safe manufacturing with a standard ESD control process.
(2) JEDEC document JEP157 states that 250-V CDM allows safe manufacturing with a standard ESD control process.

Copyright © 2019, Texas Instruments Incorporated

7.3 Recommended Operating Conditions

over operating free-air temperature range (unless otherwise noted)[(1)(2)(3)]

				MIN	MAX	UNIT
V_{CCA}	Supply voltage A			0.65	3.6	V
V_{CCB}	Supply voltage B			0.65	3.6	V
V_{IH}	High-level input voltage	Data Inputs	V_{CCI} = 0.65 V - 0.75 V	V_{CCI} x 0.70		
			V_{CCI} = 0.76 V - 1 V	V_{CCI} x 0.70		
			V_{CCI} = 1.1 V - 1.95 V	V_{CCI} x 0.65		
			V_{CCI} = 2.3 V - 2.7 V	1.6		
			V_{CCI} = 3 V - 3.6 V	V_{CCI} x 0.65		
		Control Inputs(xDIR, x$\overline{OE}$) Referenced to V_{CCA}	V_{CCA} = 0.65 V - 0.75 V	V_{CCA} x 0.70		
			V_{CCA} = 0.76 V - 1 V	V_{CCA} x 0.70		
			V_{CCA} = 1.1 V - 1.95 V	V_{CCA} x 0.65		
			V_{CCA} = 2.3 V - 2.7 V	1.6		
			V_{CCA} = 3 V - 3.6 V	V_{CCA} x 0.65		
V_{IL}	Low-level input voltage	Data Inputs	V_{CCI} = 0.65 V - 0.75 V		V_{CCI} x 0.30	V
			V_{CCI} = 0.76 V - 1 V		V_{CCI} x 0.30	
			V_{CCI} = 1.1 V - 1.95 V		V_{CCI} x 0.35	
			V_{CCI} = 2.3 V - 2.7 V		0.7	
			V_{CCI} = 3 V - 3.6 V		0.8	
		Control Inputs(xDIR, x$\overline{OE}$) Referenced to V_{CCA}	V_{CCA} = 0.65 V - 0.75 V		V_{CCA} x 0.30	
			V_{CCA} = 0.76 V - 1 V		V_{CCA} x 0.30	
			V_{CCA} = 1.1 V - 1.95 V		V_{CCA} x 0.35	
			V_{CCA} = 2.3 V - 2.7 V		0.7	
			V_{CCA} = 3 V - 3.6 V		0.8	
V_I	Input voltage [(3)]			0	3.6	V
V_O	Output voltage	Active State		0	V_{CCO}	V
		Tri-State		0	3.6	
$\Delta t/\Delta v$[(2)]	Input transition rise and fall time				10	ns/V
T_A	Operating free-air temperature			–40	125	°C

(1) V_{CCI} is the V_{CC} associated with the input port.
(2) V_{CCO} is the V_{CC} associated with the output port.
(3) All unused inputs of the device must be held at V_{CC} or GND to ensure proper device operation. Refer to the TI application report, Implications of Slow or Floating CMOS Inputs, SCBA004.

7.4 Thermal Information

THERMAL METRIC[(1)]		SN74AXCH4T245		UNIT
		PW (TSSOP)	RSV (UQFN)	
		16 PINS	16 PINS	
$R_{\theta JA}$	Junction-to-ambient thermal resistance	126.9	130.1	°C/W
$R_{\theta JC(top)}$	Junction-to-case (top) thermal resistance	49.3	70.3	°C/W
$R_{\theta JB}$	Junction-to-board thermal resistance	74.3	57.4	°C/W
ψ_{JT}	Junction-to-top characterization parameter	8.1	4.6	°C/W
ψ_{JB}	Junction-to-board characterization parameter	73.4	55.8	°C/W

(1) For more information about traditional and new thermal metrics, see the Semiconductor and IC Package Thermal Metrics application report.

Copyright © 2019, Texas Instruments Incorporated

7.5 Electrical Characteristics

over operating free-air temperature range (unless otherwise noted) [(1)(2)]

PARAMETER		TEST CONDITIONS		V_{CCA}	V_{CCB}	Operating free-air temperature (T_A)						UNIT
						-40°C to 85°C			-40°C to 125°C			
						MIN	TYP[(3)]	MAX	MIN	TYP[(3)]	MAX	
V_{OH}	High-level output voltage	$V_I = V_{IH}$	I_{OH} = -100 µA	0.7 V - 3.6 V	0.7 V - 3.6 V	V_{CCO} – 0.1			V_{CCO} – 0.1			V
			I_{OH} = -50 µA	0.65 V	0.65 V	0.55			0.55			
			I_{OH} = -200 µA	0.76 V	0.76 V	0.58			0.58			
			I_{OH} = -500 µA	0.85 V	0.85 V	0.65			0.65			
			I_{OH} = -3 mA	1.1 V	1.1 V	0.85			0.85			
			I_{OH} = -6 mA	1.4 V	1.4 V	1.05			1.05			
			I_{OH} = -8 mA	1.65 V	1.65 V	1.2			1.2			
			I_{OH} = -9 mA	2.3 V	2.3 V	1.75			1.75			
			I_{OH} = -12 mA	3 V	3 V	2.3			2.3			
V_{OL}	Low-level output voltage	$V_I = V_{IL}$	I_{OL} = 100 µA	0.7 V - 3.6 V	0.7 V - 3.6 V			0.1			0.1	V
			I_{OL} = 50 µA	0.65 V	0.65 V			0.1			0.1	
			I_{OL} = 200 µA	0.76 V	0.76 V			0.18			0.18	
			I_{OL} = 500 µA	0.85 V	0.85 V			0.2			0.2	
			I_{OL} = 3 mA	1.1 V	1.1 V			0.25			0.25	
			I_{OL} = 6 mA	1.4 V	1.4 V			0.35			0.35	
			I_{OL} = 8 mA	1.65 V	1.65 V			0.45			0.45	
			I_{OL} = 9 mA	2.3 V	2.3 V			0.55			0.55	
			I_{OL} = 12 mA	3 V	3 V			0.7			0.7	
I_{BHL}	Bus-hold low sustaining current (Port A or Port B) [(4)]	V_I = 0.20 V		0.65 V	0.65 V	4			4			µA
		V_I = 0.23 V		0.76 V	0.76 V	8			7			
		V_I = 0.26 V		0.85 V	0.85 V	10			10			
		V_I = 0.39 V		1.1 V	1.1 V	20			20			
		V_I = 0.49 V		1.4 V	1.4 V	40			30			
		V_I = 0.58 V		1.65 V	1.65 V	55			45			
		V_I = 0.7 V		2.3 V	2.3 V	90			80			
		V_I = 0.8 V		3 V	3 V	145			135			
I_{BHH}	Bus-hold high sustaining current (Port A or Port B) [(5)]	V_I = 0.20 V		0.65 V	0.65 V	–4			–4			µA
		V_I = 0.23 V		0.76 V	0.76 V	–8			–7			
		V_I = 0.26 V		0.85 V	0.85 V	–10			–10			
		V_I = 0.39 V		1.1 V	1.1 V	–20			–20			
		V_I = 0.49 V		1.4 V	1.4 V	–40			–30			
		V_I = 0.58 V		1.65 V	1.65 V	–55			–45			
		V_I = 0.7 V		2.3 V	2.3 V	–90			–80			
		V_I = 0.8 V		3 V	3 V	–145			–135			

(1) V_{CCI} is the V_{CC} associated with the input port.
(2) V_{CCO} is the V_{CC} associated with the output port.
(3) All typical data is taken at 25°C.
(4) The bus-hold circuit can sink at least the minimum low sustaining current at V_{IL} max. I_{BHL} should be measured after lowering V_{IN} to GND and then raising it to V_{IL} max.
(5) The bus-hold circuit can source at least the minimum high sustaining current at V_{IH} min. I_{BHH} should be measured after raising V_{IN} to VCC and then lowering it to V_{IH} min.

Copyright © 2019, Texas Instruments Incorporated

Electrical Characteristics (continued)

over operating free-air temperature range (unless otherwise noted) (1)(2)

PARAMETER		TEST CONDITIONS		V_{CCA}	V_{CCB}	Operating free-air temperature (T_A) -40°C to 85°C MIN	TYP(3)	MAX	-40°C to 125°C MIN	TYP(3)	MAX	UNIT
I_{BHLO}	Bus-hold low overdrive current (Port A or Port B) (6)	V_I = 0 to V_{CC}		0.75 V	0.75 V	40			40			µA
				0.84 V	0.84 V	50			50			
				0.95 V	0.95 V	65			65			
				1.3 V	1.3 V	105			105			
				1.6 V	1.6 V	150			150			
				1.95 V	1.95 V	205			205			
				2.7 V	2.7 V	335			335			
				3.6 V	3.6 V	480			480			
I_{BHHO}	Bus-hold high overdrive current (Port A or Port B) (7)	V_I = 0 to VCC		0.75 V	0.75 V	–40			–40			µA
				0.84 V	0.84 V	–50			–50			
				0.95 V	0.95 V	–65			–65			
				1.3 V	1.3 V	–105			–105			
				1.6 V	1.6 V	–150			–150			
				1.95 V	1.95 V	–205			–205			
				2.7 V	2.7 V	–335			–335			
				3.6 V	3.6 V	–480			–480			
I_I	Input leakage current	Control inputs (xDIR, x$\overline{OE}$): V_I = V_{CCA} or GND		0.65 V- 3.6 V	0.65 V- 3.6 V	–0.5		0.5	–1		1	µA
		Data Inputs (xAx, xBx) V_I = V_{CCI} or GND		0.65 V- 3.6 V	0.65 V- 3.6 V	–4		4	–8		8	µA
I_{off}	Partial power down current	A Port: V_I or V_O = 0 V - 3.6 V		0 V	0 V - 3.6 V	–8		8	–12		12	µA
		B Port: V_I or V_O = 0 V - 3.6 V		0 V - 3.6 V	0 V	–8		8	–12		12	
I_{OZ}	Tri-state output current (8)	A or B Port V_I = V_{CCI} or GND, V_O = V_{CCO} or GND, $\overline{OE}$ = V_{IH}		3.6 V	3.6 V	–4		4	–8		8	µA
I_{CCA}	V_{CCA} supply current	V_I = V_{CCI} or GND	I_O = 0	0.65 V- 3.6 V	0.65 V- 3.6 V			13			26	µA
				0 V	3.6 V	–2			–12			
				3.6 V	0 V			8			16	
I_{CCB}	V_{CCB} supply current	V_I = V_{CCI} or GND	I_O = 0	0.65 V- 3.6 V	0.65 V- 3.6 V			13			26	µA
				0 V	3.6 V			8			16	
				3.6 V	0 V	–2			–12			
I_{CCA} + I_{CCB}	Combined supply current	V_I = V_{CCI} or GND	I_O = 0	0.65 V- 3.6 V	0.65 V- 3.6 V			20			40	µA
C_i	Control Input Capacitance	V_I = 3.3 V or GND		3.3 V	3.3 V		4.5			4.5		pF
C_{io}	Data I/O Capacitance	$\overline{OE}$ = V_{CCA}, V_O = 1.65V DC +1 MHz -16 dBm sine wave		3.3 V	3.3 V		7.4			7.4		pF

(6) An external driver must source at least I_{BHLO} to switch this node from low to high.
(7) An external driver must sink at least I_{BHHO} to switch this node from high to low.
(8) For I/O ports, the parameter I_{OZ} includes the input leakage current.

Copyright © 2019, Texas Instruments Incorporated

7.6 Switching Characteristics, V_{CCA} = 0.7 ± 0.05 V

See Figure 5 and Table 1 for test circuit and loading. See Figure 6, Figure 7, and Figure 8 for measurement waveforms.

PARAMETER		FROM	TO	Test Conditions	B-Port Supply Voltage (V_{CCB})																UNIT
					0.7 ± 0.05 V		0.8 ± 0.04 V		0.9 ± 0.045 V		1.2 ± 0.1 V		1.5 ± 0.1 V		1.8 ± 0.15 V		2.5 ± 0.2 V		3.3 ± 0.3 V		
					MIN	MAX	MIN	MAX	MIN	MAX	MIN	MAX	MIN	MAX	MIN	MAX	MIN	MAX	MIN	MAX	
t_{pd}	Propagation delay	A	B	-40°C to 85°C	0.5	161	0.5	109	0.5	78	0.5	41	0.5	38	0.5	41	0.5	68	0.5	181	ns
				-40°C to 125°C	0.5	161	0.5	109	0.5	78	0.5	41	0.5	38	0.5	41	0.5	68	0.5	181	
		B	A	-40°C to 85°C	0.5	161	0.5	134	0.5	112	0.5	59	0.5	22	0.5	15	0.5	11	0.5	10	
				-40°C to 125°C	0.5	161	0.5	134	0.5	112	0.5	59	0.5	22	0.5	16	0.5	11	0.5	10	
t_{dis}	Disable time	$\overline{OE}$	A	-40°C to 85°C	0.5	159	0.5	159	0.5	159	0.5	159	0.5	159	0.5	159	0.5	159	0.5	159	ns
				-40°C to 125°C	0.5	159	0.5	159	0.5	159	0.5	159	0.5	159	0.5	159	0.5	159	0.5	159	
		$\overline{OE}$	B	-40°C to 85°C	0.5	158	0.5	122	0.5	102	0.5	55	0.5	54	0.5	56	0.5	65	0.5	125	
				-40°C to 125°C	0.5	158	0.5	122	0.5	102	0.5	55	0.5	54	0.5	56	0.5	65	0.5	125	
t_{en}	Enable time	$\overline{OE}$	A	-40°C to 85°C	0.5	243	0.5	243	0.5	243	0.5	243	0.5	243	0.5	243	0.5	243	0.5	243	ns
				-40°C to 125°C	0.5	243	0.5	243	0.5	243	0.5	243	0.5	243	0.5	243	0.5	243	0.5	243	
		$\overline{OE}$	B	-40°C to 85°C	0.5	292	0.5	192	0.5	134	0.5	87	0.5	73	0.5	69	0.5	70	0.5	148	
				-40°C to 125°C	0.5	292	0.5	192	0.5	134	0.5	88	0.5	74	0.5	69	0.5	70	0.5	148	

Copyright © 2019, Texas Instruments Incorporated

7.7 Switching Characteristics, V_{CCA} = 0.8 ± 0.04 V

See Figure 5 and Table 1 for test circuit and loading. See Figure 6, Figure 7, and Figure 8 for measurement waveforms.

PARAMETER		FROM	TO	Test Conditions	B-Port Supply Voltage (V_{CCB})																UNIT
					0.7 ± 0.05 V		0.8 ± 0.04 V		0.9 ± 0.045 V		1.2 ± 0.1 V		1.5 ± 0.1 V		1.8 ± 0.15 V		2.5 ± 0.2 V		3.3 ± 0.3 V		
					MIN	MAX	MIN	MAX	MIN	MAX	MIN	MAX	MIN	MAX	MIN	MAX	MIN	MAX	MIN	MAX	
t_{pd}	Propagation delay	A	B	-40°C to 85°C	0.5	134	0.5	90	0.5	64	0.5	30	0.5	24	0.5	23	0.5	25	0.5	34	ns
				-40°C to 125°C	0.5	134	0.5	90	0.5	64	0.5	30	0.5	24	0.5	23	0.5	25	0.5	34	
		B	A	-40°C to 85°C	0.5	109	0.5	90	0.5	72	0.5	39	0.5	22	0.5	15	0.5	11	0.5	10	
				-40°C to 125°C	0.5	109	0.5	90	0.5	72	0.5	39	0.5	22	0.5	15	0.5	11	0.5	10	
t_{dis}	Disable time	$\overline{OE}$	A	-40°C to 85°C	0.5	110	0.5	110	0.5	110	0.5	110	0.5	110	0.5	110	0.5	110	0.5	110	ns
				-40°C to 125°C	0.5	110	0.5	110	0.5	110	0.5	110	0.5	110	0.5	110	0.5	110	0.5	110	
		$\overline{OE}$	B	-40°C to 85°C	0.5	147	0.5	111	0.5	91	0.5	42	0.5	36	0.5	35	0.5	37	0.5	47	
				-40°C to 125°C	0.5	147	0.5	111	0.5	91	0.5	42	0.5	36	0.5	35	0.5	37	0.5	47	
t_{en}	Enable time	$\overline{OE}$	A	-40°C to 85°C	0.5	143	0.5	143	0.5	143	0.5	143	0.5	143	0.5	143	0.5	143	0.5	143	ns
				-40°C to 125°C	0.5	143	0.5	143	0.5	143	0.5	143	0.5	143	0.5	143	0.5	143	0.5	143	
		$\overline{OE}$	B	-40°C to 85°C	0.5	253	0.5	164	0.5	117	0.5	71	0.5	57	0.5	52	0.5	47	0.5	53	
				-40°C to 125°C	0.5	253	0.5	164	0.5	117	0.5	73	0.5	58	0.5	53	0.5	48	0.5	53	

Copyright © 2019, Texas Instruments Incorporated

7.8 Switching Characteristics, V_{CCA} = 0.9 ± 0.045 V

See Figure 5 and Table 1 for test circuit and loading. See Figure 6, Figure 7, and Figure 8 for measurement waveforms.

PARAMETER		FROM	TO	Test Conditions	B-Port Supply Voltage (V_{CCB})																UNIT
					0.7 ± 0.05 V		0.8 ± 0.04 V		0.9 ± 0.045 V		1.2 ± 0.1 V		1.5 ± 0.1 V		1.8 ± 0.15 V		2.5 ± 0.2 V		3.3 ± 0.3 V		
					MIN	MAX	MIN	MAX	MIN	MAX	MIN	MAX	MIN	MAX	MIN	MAX	MIN	MAX	MIN	MAX	
t_{pd}	Propagation delay	A	B	-40°C to 85°C	0.5	112	0.5	72	0.5	54	0.5	24	0.5	19	0.5	17	0.5	16	0.5	19	ns
				-40°C to 125°C	0.5	112	0.5	72	0.5	54	0.5	24	0.5	19	0.5	17	0.5	16	0.5	19	
		B	A	-40°C to 85°C	0.5	78	0.5	64	0.5	54	0.5	27	0.5	19	0.5	14	0.5	10	0.5	10	
				-40°C to 125°C	0.5	78	0.5	64	0.5	54	0.5	27	0.5	19	0.5	14	0.5	10	0.5	10	
t_{dis}	Disable time	$\overline{OE}$	A	-40°C to 85°C	0.5	81	0.5	81	0.5	81	0.5	81	0.5	81	0.5	81	0.5	81	0.5	81	ns
				-40°C to 125°C	0.5	82	0.5	82	0.5	82	0.5	82	0.5	82	0.5	82	0.5	82	0.5	82	
		$\overline{OE}$	B	-40°C to 85°C	0.5	141	0.5	106	0.5	85	0.5	36	0.5	29	0.5	27	0.5	26	0.5	30	
				-40°C to 125°C	0.5	141	0.5	106	0.5	85	0.5	37	0.5	30	0.5	28	0.5	26	0.5	30	
t_{en}	Enable time	$\overline{OE}$	A	-40°C to 85°C	0.5	84	0.5	84	0.5	84	0.5	84	0.5	84	0.5	84	0.5	84	0.5	84	ns
				-40°C to 125°C	0.5	84	0.5	84	0.5	84	0.5	84	0.5	84	0.5	84	0.5	84	0.5	84	
		$\overline{OE}$	B	-40°C to 85°C	0.5	229	0.5	149	0.5	107	0.5	63	0.5	48	0.5	43	0.5	37	0.5	38	
				-40°C to 125°C	0.5	229	0.5	149	0.5	107	0.5	65	0.5	50	0.5	45	0.5	39	0.5	39	

Copyright © 2019, Texas Instruments Incorporated

7.9 Switching Characteristics, V_{CCA} = 1.2 ± 0.1 V

See Figure 5 and Table 1 for test circuit and loading. See Figure 6, Figure 7, and Figure 8 for measurement waveforms.

PARAMETER		FROM	TO	Test Conditions	B-Port Supply Voltage (V_{CCB})																UNIT
					0.7 ± 0.05 V		0.8 ± 0.04 V		0.9 ± 0.045 V		1.2 ± 0.1 V		1.5 ± 0.1 V		1.8 ± 0.15 V		2.5 ± 0.2 V		3.3 ± 0.3 V		
					MIN	MAX	MIN	MAX	MIN	MAX	MIN	MAX	MIN	MAX	MIN	MAX	MIN	MAX	MIN	MAX	
t_{pd}	Propagation delay	A	B	-40°C to 85°C	0.5	60	0.5	39	0.5	27	0.5	15	0.5	11	0.5	10	0.5	8	0.5	9	ns
				-40°C to 125°C	0.5	60	0.5	39	0.5	27	0.5	15	0.5	12	0.5	10	0.5	9	0.5	9	
		B	A	-40°C to 85°C	0.5	41	0.5	30	0.5	24	0.5	15	0.5	11	0.5	9	0.5	7	0.5	7	
				-40°C to 125°C	0.5	41	0.5	30	0.5	24	0.5	15	0.5	11	0.5	9	0.5	7	0.5	7	
t_{dis}	Disable time	$\overline{OE}$	A	-40°C to 85°C	0.5	28	0.5	28	0.5	28	0.5	28	0.5	28	0.5	28	0.5	28	0.5	28	ns
				-40°C to 125°C	0.5	30	0.5	30	0.5	30	0.5	30	0.5	30	0.5	30	0.5	30	0.5	30	
		$\overline{OE}$	B	-40°C to 85°C	0.5	133	0.5	100	0.5	79	0.5	29	0.5	22	0.5	20	0.5	17	0.5	17	
				-40°C to 125°C	0.5	134	0.5	100	0.5	80	0.5	31	0.5	23	0.5	21	0.5	18	0.5	18	
t_{en}	Enable time	$\overline{OE}$	A	-40°C to 85°C	0.5	37	0.5	37	0.5	37	0.5	37	0.5	37	0.5	37	0.5	37	0.5	37	ns
				-40°C to 125°C	0.5	39	0.5	39	0.5	39	0.5	39	0.5	39	0.5	39	0.5	39	0.5	39	
		$\overline{OE}$	B	-40°C to 85°C	0.5	168	0.5	109	0.5	77	0.5	51	0.5	37	0.5	31	0.5	25	0.5	23	
				-40°C to 125°C	0.5	168	0.5	109	0.5	78	0.5	53	0.5	39	0.5	34	0.5	27	0.5	24	

Copyright © 2019, Texas Instruments Incorporated

7.10 Switching Characteristics, V_{CCA} = 1.5 ± 0.1 V

See Figure 5 and Table 1 for test circuit and loading. See Figure 6, Figure 7, and Figure 8 for measurement waveforms.

PARAMETER		FROM	TO	Test Conditions	B-Port Supply Voltage (V_{CCB})																UNIT
					0.7 ± 0.05 V		0.8 ± 0.04 V		0.9 ± 0.045 V		1.2 ± 0.1 V		1.5 ± 0.1 V		1.8 ± 0.15 V		2.5 ± 0.2 V		3.3 ± 0.3 V		
					MIN	MAX	MIN	MAX	MIN	MAX	MIN	MAX	MIN	MAX	MIN	MAX	MIN	MAX	MIN	MAX	
t_{pd}	Propagation delay	A	B	-40°C to 85°C	0.5	22	0.5	22	0.5	19	0.5	11	0.5	9	0.5	8	0.5	7	0.5	6	ns
				-40°C to 125°C	0.5	22	0.5	22	0.5	19	0.5	11	0.5	9	0.5	8	0.5	7	0.5	6	
		B	A	-40°C to 85°C	0.5	38	0.5	24	0.5	19	0.5	11	0.5	9	0.5	8	0.5	5	0.5	5	
				-40°C to 125°C	0.5	38	0.5	24	0.5	19	0.5	11	0.5	9	0.5	8	0.5	6	0.5	5	
t_{dis}	Disable time	$\overline{OE}$	A	-40°C to 85°C	0.5	19	0.5	19	0.5	19	0.5	19	0.5	19	0.5	19	0.5	19	0.5	19	ns
				-40°C to 125°C	0.5	21	0.5	21	0.5	21	0.5	21	0.5	21	0.5	21	0.5	21	0.5	21	
		$\overline{OE}$	B	-40°C to 85°C	0.5	131	0.5	98	0.5	78	0.5	27	0.5	20	0.5	18	0.5	14	0.5	14	
				-40°C to 125°C	0.5	132	0.5	98	0.5	78	0.5	29	0.5	21	0.5	19	0.5	15	0.5	15	
t_{en}	Enable time	$\overline{OE}$	A	-40°C to 85°C	0.5	23	0.5	23	0.5	23	0.5	23	0.5	23	0.5	23	0.5	23	0.5	23	ns
				-40°C to 125°C	0.5	25	0.5	25	0.5	25	0.5	25	0.5	25	0.5	25	0.5	25	0.5	25	
		$\overline{OE}$	B	-40°C to 85°C	0.5	109	0.5	84	0.5	67	0.5	43	0.5	31	0.5	26	0.5	20	0.5	18	
				-40°C to 125°C	0.5	109	0.5	84	0.5	68	0.5	45	0.5	34	0.5	29	0.5	22	0.5	19	

Copyright © 2019, Texas Instruments Incorporated

7.11 Switching Characteristics, V_{CCA} = 1.8 ± 0.15 V

See Figure 5 and Table 1 for test circuit and loading. See Figure 6, Figure 7, and Figure 8 for measurement waveforms.

PARAMETER		FROM	TO	Test Conditions	B-Port Supply Voltage (V_{CCB})																UNIT
					0.7 ± 0.05 V		0.8 ± 0.04 V		0.9 ± 0.045 V		1.2 ± 0.1 V		1.5 ± 0.1 V		1.8 ± 0.15 V		2.5 ± 0.2 V		3.3 ± 0.3 V		
					MIN	MAX	MIN	MAX	MIN	MAX	MIN	MAX	MIN	MAX	MIN	MAX	MIN	MAX	MIN	MAX	
t_{pd}	Propagation delay	A	B	-40°C to 85°C	0.5	15	0.5	15	0.5	14	0.5	9	0.5	8	0.5	7	0.5	6	0.5	6	ns
				-40°C to 125°C	0.5	16	0.5	15	0.5	14	0.5	9	0.5	8	0.5	7	0.5	6	0.5	6	
		B	A	-40°C to 85°C	0.5	41	0.5	23	0.5	17	0.5	10	0.5	8	0.5	7	0.5	5	0.5	4	
				-40°C to 125°C	0.5	41	0.5	23	0.5	17	0.5	10	0.5	8	0.5	7	0.5	5	0.5	4	
t_{dis}	Disable time	$\overline{OE}$	A	-40°C to 85°C	0.5	17	0.5	17	0.5	17	0.5	17	0.5	17	0.5	17	0.5	17	0.5	17	ns
				-40°C to 125°C	0.5	18	0.5	18	0.5	18	0.5	18	0.5	18	0.5	18	0.5	18	0.5	18	
		$\overline{OE}$	B	-40°C to 85°C	0.5	129	0.5	98	0.5	77	0.5	27	0.5	19	0.5	17	0.5	13	0.5	13	
				-40°C to 125°C	0.5	131	0.5	98	0.5	77	0.5	28	0.5	21	0.5	18	0.5	14	0.5	14	
t_{en}	Enable time	$\overline{OE}$	A	-40°C to 85°C	0.5	17	0.5	17	0.5	17	0.5	17	0.5	17	0.5	17	0.5	17	0.5	17	ns
				-40°C to 125°C	0.5	19	0.5	19	0.5	19	0.5	19	0.5	19	0.5	19	0.5	19	0.5	19	
		$\overline{OE}$	B	-40°C to 85°C	0.5	102	0.5	73	0.5	60	0.5	38	0.5	28	0.5	24	0.5	19	0.5	16	
				-40°C to 125°C	0.5	102	0.5	75	0.5	62	0.5	41	0.5	31	0.5	26	0.5	20	0.5	18	

Copyright © 2019, Texas Instruments Incorporated

7.12 Switching Characteristics, V_{CCA} = 2.5 ± 0.2 V

See Figure 5 and Table 1 for test circuit and loading. See Figure 6, Figure 7, and Figure 8 for measurement waveforms.

PARAMETER		FROM	TO	Test Conditions	B-Port Supply Voltage (V_{CCB})																UNIT
					0.7 ± 0.05 V		0.8 ± 0.04 V		0.9 ± 0.045 V		1.2 ± 0.1 V		1.5 ± 0.1 V		1.8 ± 0.15 V		2.5 ± 0.2 V		3.3 ± 0.3 V		
					MIN	MAX	MIN	MAX	MIN	MAX	MIN	MAX	MIN	MAX	MIN	MAX	MIN	MAX	MIN	MAX	
t_{pd}	Propagation delay	A	B	-40°C to 85°C	0.5	11	0.5	11	0.5	10	0.5	7	0.5	6	0.5	5	0.5	5	0.5	5	ns
				-40°C to 125°C	0.5	11	0.5	11	0.5	10	0.5	7	0.5	6	0.5	5	0.5	5	0.5	5	
		B	A	-40°C to 85°C	0.5	68	0.5	25	0.5	17	0.5	8	0.5	7	0.5	6	0.5	5	0.5	4	
				-40°C to 125°C	0.5	68	0.5	25	0.5	17	0.5	9	0.5	7	0.5	6	0.5	5	0.5	4	
t_{dis}	Disable time	$\overline{OE}$	A	-40°C to 85°C	0.5	12	0.5	12	0.5	12	0.5	12	0.5	12	0.5	12	0.5	12	0.5	12	ns
				-40°C to 125°C	0.5	13	0.5	13	0.5	13	0.5	13	0.5	13	0.5	13	0.5	13	0.5	13	
		$\overline{OE}$	B	-40°C to 85°C	0.5	128	0.5	96	0.5	76	0.5	26	0.5	18	0.5	16	0.5	12	0.5	12	
				-40°C to 125°C	0.5	129	0.5	96	0.5	77	0.5	27	0.5	20	0.5	17	0.5	13	0.5	13	
t_{en}	Enable time	$\overline{OE}$	A	-40°C to 85°C	0.5	12	0.5	12	0.5	12	0.5	12	0.5	12	0.5	12	0.5	12	0.5	12	ns
				-40°C to 125°C	0.5	13	0.5	13	0.5	13	0.5	13	0.5	13	0.5	13	0.5	13	0.5	13	
		$\overline{OE}$	B	-40°C to 85°C	0.5	120	0.5	69	0.5	54	0.5	33	0.5	24	0.5	20	0.5	16	0.5	14	
				-40°C to 125°C	0.5	120	0.5	70	0.5	56	0.5	36	0.5	26	0.5	22	0.5	18	0.5	15	

Copyright © 2019, Texas Instruments Incorporated

7.13 Switching Characteristics, V_{CCA} = 3.3 ± 0.3 V

See Figure 5 and Table 1 for test circuit and loading. See Figure 6, Figure 7, and Figure 8 for measurement waveforms.

PARAMETER		FROM	TO	Test Condtions	B-Port Supply Voltage (V_{CCB})																UNIT
					0.7 ± 0.05 V		0.8 ± 0.04 V		0.9 ± 0.045 V		1.2 ± 0.1 V		1.5 ± 0.1 V		1.8 ± 0.15 V		2.5 ± 0.2 V		3.3 ± 0.3 V		
					MIN	MAX	MIN	MAX	MIN	MAX	MIN	MAX	MIN	MAX	MIN	MAX	MIN	MAX	MIN	MAX	
t_{pd}	Propagation delay	A	B	-40°C to 85°C	0.5	10	0.5	10	0.5	10	0.5	7	0.5	5	0.5	5	0.5	5	0.5	4	ns
				-40°C to 125°C	0.5	10	0.5	10	0.5	10	0.5	7	0.5	5	0.5	5	0.5	5	0.5	4	
		B	A	-40°C to 85°C	0.5	182	0.5	34	0.5	19	0.5	9	0.5	6	0.5	5	0.5	5	0.5	4	
				-40°C to 125°C	0.5	182	0.5	34	0.5	19	0.5	9	0.5	6	0.5	6	0.5	5	0.5	4	
t_{dis}	Disable time	$\overline{OE}$	A	-40°C to 85°C	0.5	11	0.5	11	0.5	11	0.5	11	0.5	11	0.5	11	0.5	11	0.5	11	ns
				-40°C to 125°C	0.5	12	0.5	12	0.5	12	0.5	12	0.5	12	0.5	12	0.5	12	0.5	12	
		$\overline{OE}$	B	-40°C to 85°C	0.5	142	0.5	96	0.5	76	0.5	26	0.5	18	0.5	16	0.5	12	0.5	11	
				-40°C to 125°C	0.5	142	0.5	97	0.5	77	0.5	27	0.5	19	0.5	17	0.5	13	0.5	12	
t_{en}	Enable time	$\overline{OE}$	A	-40°C to 85°C	0.5	9	0.5	9	0.5	9	0.5	9	0.5	9	0.5	9	0.5	9	0.5	9	ns
				-40°C to 125°C	0.5	11	0.5	11	0.5	11	0.5	11	0.5	11	0.5	11	0.5	11	0.5	11	
		$\overline{OE}$	B	-40°C to 85°C	0.5	194	0.5	82	0.5	57	0.5	33	0.5	22	0.5	18	0.5	14	0.5	13	
				-40°C to 125°C	0.5	194	0.5	82	0.5	58	0.5	35	0.5	24	0.5	20	0.5	16	0.5	14	

Copyright © 2019, Texas Instruments Incorporated

7.14 Operating Characteristics: T_A = 25°C

PARAMETER		TEST CONDITIONS	V_{CCA}	V_{CCB}	MIN	TYP	MAX	UNIT
C_{pdA}	Power Dissipation Capacitance per transceiver (A to B: outputs enabled)	CL = 0, RL = Open f = 1 MHz, tr = tf = 1 ns	0.7 V	0.7 V		2.2		pF
			0.8 V	0.8 V		2.3		
			0.9 V	0.9 V		2.3		
			1.2 V	1.2 V		2.3		
			1.5 V	1.5 V		2.2		
			1.8 V	1.8 V		2.2		
			2.5 V	2.5 V		2.5		
			3.3 V	3.3 V		2.6		
	Power Dissipation Capacitance per transceiver (A to B: outputs disabled)	CL = 0, RL = Open f = 1 MHz, tr = tf = 1 ns	0.7 V	0.7 V		1.5		pF
			0.8 V	0.8 V		1.7		
			0.9 V	0.9 V		1.7		
			1.2 V	1.2 V		1.7		
			1.5 V	1.5 V		1.5		
			1.8 V	1.8 V		1.5		
			2.5 V	2.5 V		1.8		
			3.3 V	3.3 V		2.1		
	Power Dissipation Capacitance per transceiver (B to A: outputs enabled)	CL = 0, RL = Open f = 1 MHz, tr = tf = 1 ns	0.7 V	0.7 V		12.6		pF
			0.8 V	0.8 V		12.4		
			0.9 V	0.9 V		12.4		
			1.2 V	1.2 V		12.8		
			1.5 V	1.5 V		13.3		
			1.8 V	1.8 V		14.6		
			2.5 V	2.5 V		18.0		
			3.3 V	3.3 V		21.1		
	Power Dissipation Capacitance per transceiver (B to A: outputs disabled)	CL = 0, RL = Open f = 1 MHz, tr = tf = 1 ns	0.7 V	0.7 V		1.1		pF
			0.8 V	0.8 V		1.1		
			0.9 V	0.9 V		1.0		
			1.2 V	1.2 V		1.0		
			1.5 V	1.5 V		1.0		
			1.8 V	1.8 V		0.9		
			2.5 V	2.5 V		0.9		
			3.3 V	3.3 V		0.9		

Copyright © 2019, Texas Instruments Incorporated

Operating Characteristics: T_A = 25°C (continued)

PARAMETER		TEST CONDITIONS	V_{CCA}	V_{CCB}	MIN	TYP	MAX	UNIT
C_{pdB}	Power Dissipation Capacitance per transceiver (A to B: outputs enabled)	CL = 0, RL = Open f = 1 MHz, tr = tf = 1 ns	0.7 V	0.7 V		12.6		pF
			0.8 V	0.8 V		12.4		
			0.9 V	0.9 V		12.4		
			1.2 V	1.2 V		12.8		
			1.5 V	1.5 V		13.3		
			1.8 V	1.8 V		14.6		
			2.5 V	2.5 V		17.8		
			3.3 V	3.3 V		21.0		
	Power Dissipation Capacitance per transceiver (A to B: outputs disabled)	CL = 0, RL = Open f = 1 MHz, tr = tf = 1 ns	0.7 V	0.7 V		1.1		pF
			0.8 V	0.8 V		1.1		
			0.9 V	0.9 V		1.0		
			1.2 V	1.2 V		1.0		
			1.5 V	1.5 V		1.0		
			1.8 V	1.8 V		0.9		
			2.5 V	2.5 V		0.9		
			3.3 V	3.3 V		0.9		
	Power Dissipation Capacitance per transceiver (B to A: outputs enabled)	CL = 0, RL = Open f = 1 MHz, tr = tf = 1 ns	0.7 V	0.7 V		2.2		pF
			0.8 V	0.8 V		2.2		
			0.9 V	0.9 V		2.2		
			1.2 V	1.2 V		2.0		
			1.5 V	1.5 V		2.0		
			1.8 V	1.8 V		1.9		
			2.5 V	2.5 V		2.0		
			3.3 V	3.3 V		2.6		
	Power Dissipation Capacitance per transceiver (B to A: outputs disabled)	CL = 0, RL = Open f = 1 MHz, tr = tf = 1 ns	0.7 V	0.7 V		1.6		pF
			0.8 V	0.8 V		1.5		
			0.9 V	0.9 V		1.6		
			1.2 V	1.2 V		1.4		
			1.5 V	1.5 V		1.3		
			1.8 V	1.8 V		1.2		
			2.5 V	2.5 V		1.4		
			3.3 V	3.3 V		1.9		

Copyright © 2019, Texas Instruments Incorporated

7.15 Typical Characteristics

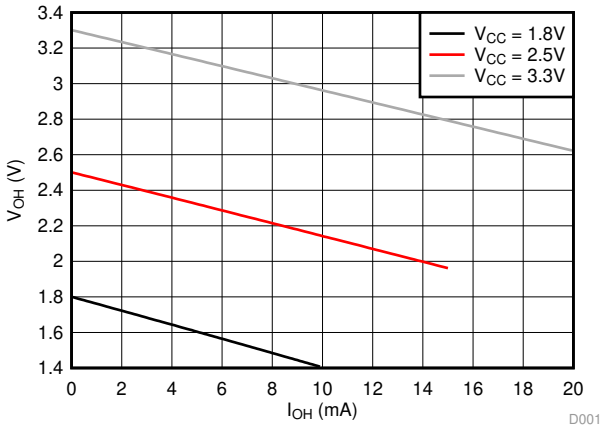

図 1. Typical (T_A=25°C) Output High Voltage (V_{OH}) vs Source Current (I_{OH})

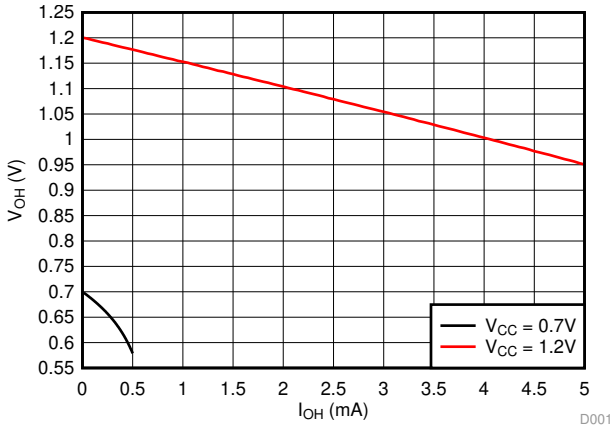

図 2. Typical (T_A=25°C) Output High Voltage (V_{OH}) vs Source Current (I_{OH})

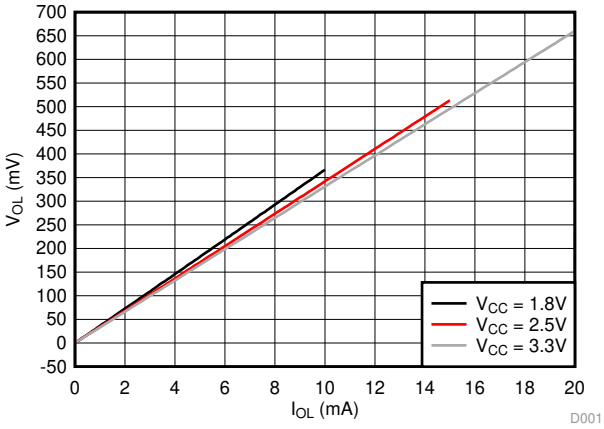

図 3. Typical (T_A=25°C) Output High Voltage (V_{OL}) vs Sink Current (I_{OL})

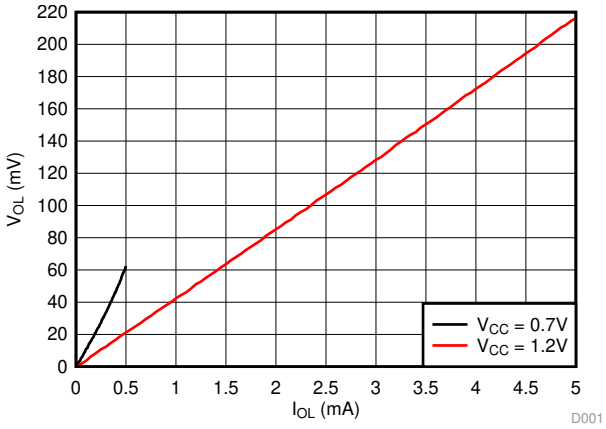

図 4. Typical (T_A=25°C) Output High Voltage (V_{OL}) vs Sink Current (I_{OL})

Copyright © 2019, Texas Instruments Incorporated

8 Parameter Measurement Information

8.1 Load Circuit and Voltage Waveforms

Unless otherwise noted, all input pulses are supplied by generators having the following characteristics:

- f = 1 MHz
- Z_O = 50 Ω
- dv/dt ≤ 1 ns/V

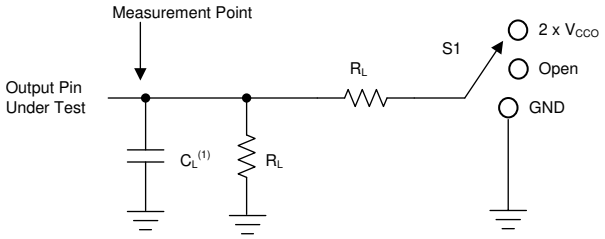

(1) C_L includes probe and jig capacitance.

図 5. Load Circuit

表 1. Load Circuit Conditions

Parameter		V_{CCO}	R_L	C_L	S_1	V_{TP}
Δt/Δv	Input transition rise or fall rate	0.65 V – 3.6 V	1 MΩ	15 pF	Open	N/A
t_{pd}	Propagation (delay) time	1.1 V – 3.6 V	2 kΩ	15 pF	Open	N/A
		0.65 V – 0.95 V	20 kΩ	15 pF	Open	N/A
t_{en}, t_{dis}	Enable time, disable time	3 V – 3.6 V	2 kΩ	15 pF	2 × V_{CCO}	0.3 V
		1.65 V – 2.7 V	2 kΩ	15 pF	2 × V_{CCO}	0.15 V
		1.1 V – 1.6 V	2 kΩ	15 pF	2 × V_{CCO}	0.1 V
		0.65 V – 0.95 V	20 kΩ	15 pF	2 × V_{CCO}	0.1 V
t_{en}, t_{dis}	Enable time, disable time	3 V – 3.6 V	2 kΩ	15 pF	GND	0.3 V
		1.65 V – 2.7 V	2 kΩ	15 pF	GND	0.15 V
		1.1 V – 1.6 V	2 kΩ	15 pF	GND	0.1 V
		0.65 V – 0.95 V	20 kΩ	15 pF	GND	0.1 V

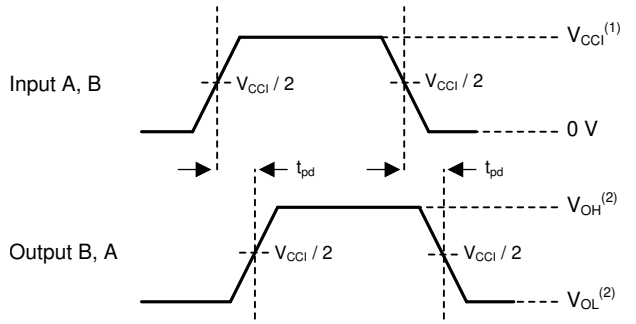

1. V_{CCI} is the supply pin associated with the input port.
2. V_{OH} and V_{OL} are typical output voltage levels that occur with specified R_L, C_L, and S_1

図 6. Propagation Delay

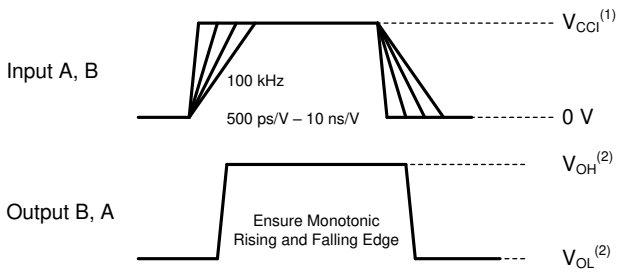

1. V_{CCI} is the supply pin associated with the input port.
2. V_{OH} and V_{OL} are typical output voltage levels that occur with specified R_L, C_L, and S_1

図 7. Input Transition Rise or Fall Rate

Copyright © 2019, Texas Instruments Incorporated

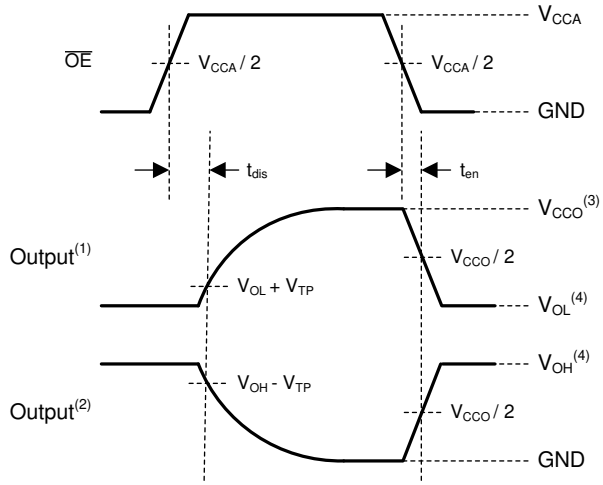

(1) Output waveform on the condition that input is driven to a valid Logic Low.

(2) Output waveform on the condition that input is driven to a valid Logic High.

(3) V_{CCO} is the supply pin associated with the output port.

(4) V_{OH} and V_{OL} are typical output voltage levels with specified R_L, C_L, and S_1.

図 8. Enable Time and Disable Time

9 Detailed Description

9.1 Overview

The SN74AXCH4T245 is a 4-bit, dual-supply noninverting bidirectional voltage level translation device with bus-hold inputs. xAx pins and control pins (1DIR, 2DIR, 1$\overline{OE}$, and 2$\overline{OE}$) are reference to V_{CCA} logic levels, and xBx pins are referenced to V_{CCB} logic levels. The A port is able to accept I/O voltages ranging from 0.65 V to 3.6 V, while the B port can accept I/O voltages from 0.65 V to 3.6 V. A high on DIR allows data transmission from A to B and a low on DIR allows data transmission from B to A when $\overline{OE}$ is set to low. When $\overline{OE}$ is set to high, both xAx and xBx pins are in the high-impedance state. See *Device Functional Modes* for a summary of the operation of the control logic.

9.2 Functional Block Diagram

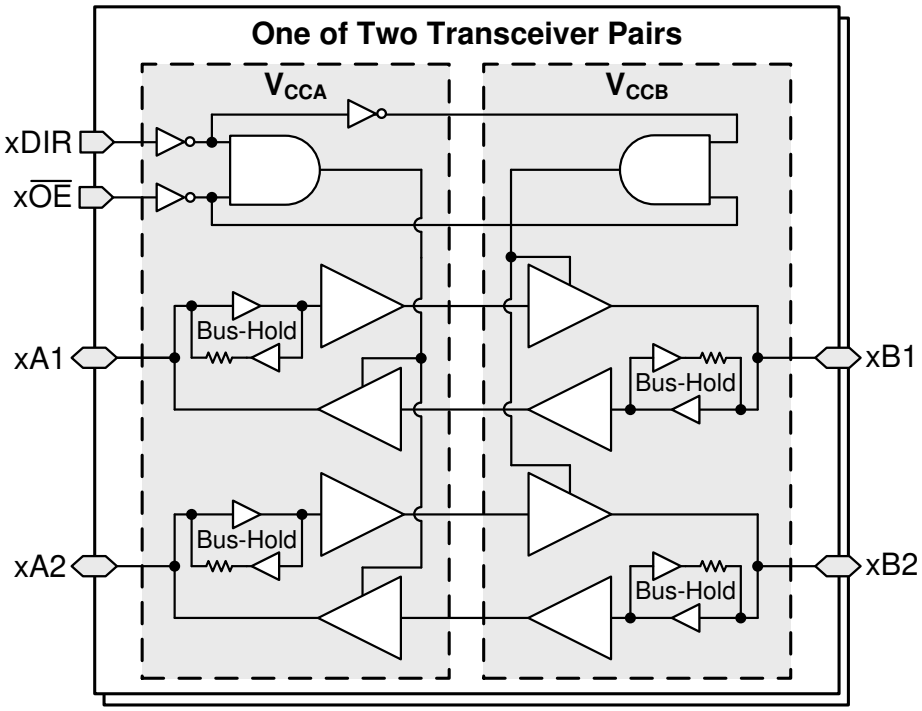

Note: Bus-hold circuits are only present for data inputs, not control inputs

9.3 Feature Description

9.3.1 Standard CMOS Inputs

Standard CMOS inputs are high impedance and are typically modeled as a resistor in parallel with the input capacitance given in the *Electrical Characteristics*. The worst case resistance is calculated with the maximum input voltage, given in the *Absolute Maximum Ratings*, and the maximum input leakage current, given in the *Electrical Characteristics*, using Ohm's law (R = V ÷ I).

Signals applied to the inputs need to have fast edge rates, as defined by $\Delta t/\Delta v$ in *Recommended Operating Conditions* to avoid excessive current consumption and oscillations. If a slow or noisy input signal is required, a device with a Schmitt-trigger input should be used to condition the input signal prior to the standard CMOS input.

9.3.2 Balanced High-Drive CMOS Push-Pull Outputs

A balanced output allows the device to sink and source similar currents. The high drive capability of this device creates fast edges into light loads so routing and load conditions should be considered to prevent ringing. Additionally, the outputs of this device are capable of driving larger currents than the device can sustain without being damaged. The electrical and thermal limits defined in the *Absolute Maximum Ratings* must be followed at all times.

Copyright © 2019, Texas Instruments Incorporated

Feature Description (continued)

9.3.3 Partial Power Down (I_{off})

The inputs and outputs for this device enter a high-impedance state when the device is powered down, inhibiting current backflow into the device. The maximum leakage into or out of any input or output pin on the device is specified by I_{off} in the *Electrical Characteristics*.

9.3.4 V_{CC} Isolation

The inputs and outputs for this device enter a high-impedance state when either supply is <100mV.

9.3.5 Over-voltage Tolerant Inputs

Input signals to this device can be driven above the supply voltage so long as they remain below the maximum input voltage value specified in the *Recommended Operating Conditions*.

9.3.6 Glitch-free Power Supply Sequencing

Either supply rail may be powered on or off in any order without producing a glitch on the I/Os (that is, where the output erroneously transitions to VCC when it should be held low). Glitches of this nature can be misinterpreted by a peripheral as a valid data bit, which could trigger a false device reset of the peripheral, a false device configuration of the peripheral, or even a false data initialization by the peripheral. For more information regarding the power up glitch performance of the AXC family of level translators, see the *Glitch Free Power Sequencing With AXC Level Translators* application report

9.3.7 Negative Clamping Diodes

The inputs and outputs to this device have negative clamping diodes as depicted in 図 9.

注意

Voltages beyond the values specified in the *Absolute Maximum Ratings* table can cause damage to the device. The input negative-voltage and output voltage ratings may be exceeded if the input and output clamp-current ratings are observed.

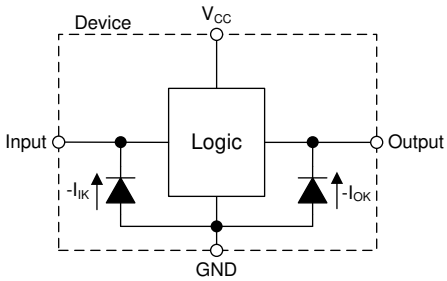

図 9. Electrical Placement of Clamping Diodes for Each Input and Output

9.3.8 Fully Configurable Dual-Rail Design

Both the V_{CCA} and V_{CCB} pins can be supplied at any voltage from 0.65 V to 3.6 V, making the device suitable for translating between any of the voltage nodes (0.7 V, 0.8 V, 0.9 V, 1.2 V, 1.8 V, 2.5 V and 3.3 V).

9.3.9 Supports High-Speed Translation

The SN74AXCH4T245 device can support high data-rate applications. The translated signal data rate can be up to 380 Mbps when the signal is translated from 1.8 V to 3.3 V.

Copyright © 2019, Texas Instruments Incorporated

Feature Description (continued)

9.3.10 Bus-Hold Data Inputs

Each data input on this device includes a weak latch that maintains a valid logic level on the input. The state of these latches is unknown at startup and remains unknown until the input has been forced to a valid high or low state. After data has been sent through a channel, the latch then maintains the previous state on the input if the line is left floating. It is not recommended to use pull-up or pull-down resistors together with a bus-hold input, as it may cause undefined inputs to occur which leads to excessive current consumption.

Bus-hold data inputs prevent floating inputs on this device. The *Implications of Slow or Floating CMOS Inputs* application report explains the problems associated with leaving CMOS inputs floating.

These latches remain active at all times, independent of all control signals such as direction control or output enable.

The *Bus-Hold Circuit* application report has additional details regarding bus-hold inputs.

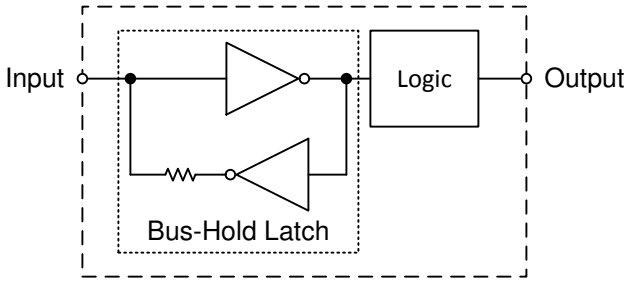

図 10. Simplified Schematic For Device With Bus-Hold Data Inputs

9.4 Device Functional Modes

表 2. Function Table (Each 2-Bit Section)(1)(2)

CONTROL INPUTS		Port Status		OPERATION
$\overline{OE}$	DIR	A PORT	B PORT	
L	L	Output (Enabled)	Input (Hi-Z)	B data to A bus
L	H	Input (Hi-Z)	Output (Enabled)	A data to B bus
H	X	Input (Hi-Z)	Input (Hi-Z)	Isolation

(1) Input circuits of the data I/Os are always active.
(2) Bus-hold circuits of the data I/Os are always active, independent of the state of the control inputs.

Copyright © 2019, Texas Instruments Incorporated

10 Application and Implementation

注

Information in the following applications sections is not part of the TI component specification, and TI does not warrant its accuracy or completeness. TI's customers are responsible for determining suitability of components for their purposes. Customers should validate and test their design implementation to confirm system functionality.

10.1 Application Information

The SN74AXCH4T245 device can be used in level-translation applications for interfacing devices or systems operating at different interface voltages with one another. The SN74AXCH4T245 device is ideal for use in applications where a push-pull driver is connected to the data I/Os. The max data rate can be up to 380 Mbps when device translates a signal from 1.8 V to 3.3 V.

One example application is shown in 図 11, where the SN74AXCH4T245 device is used to translate a low voltage UART signal from an SoC to a higher voltage signal which properly drive the inputs of the bluetooth module, and vice versa.

10.2 Typical Application

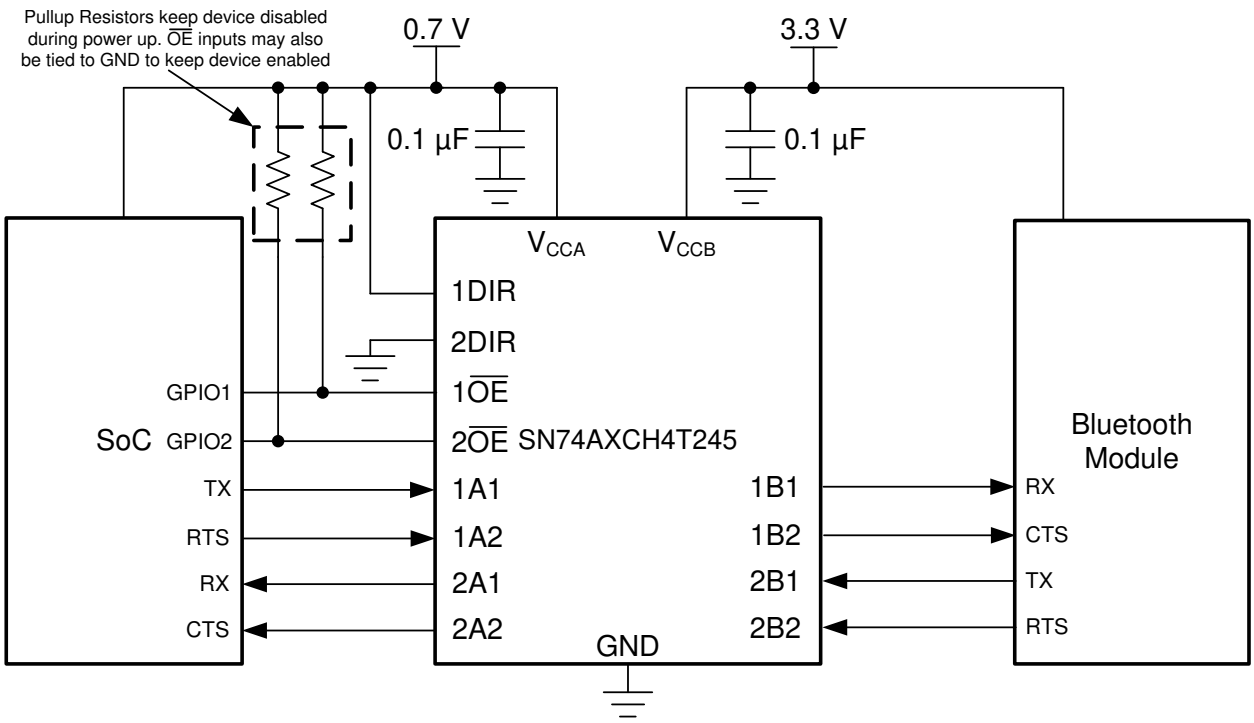

図 11. UART Interface Application

10.2.1 Design Requirements

For this design example, use the parameters listed in 表 3.

表 3. Design Parameters

DESIGN PARAMETERS	EXAMPLE VALUES
Input voltage range	0.65 V to 3.6 V
Output voltage range	0.65 V to 3.6 V

10.2.2 Detailed Design Procedure

To begin the design process, determine the following:

- Input voltage range
  - Use the supply voltage of the device that is driving the SN74AXCH4T245 device to determine the input voltage range. For a valid logic-high, the value must exceed the high-level input voltage (V_{IH}) of the input port. For a valid logic low the value must be less than the low-level input voltage (V_{IL}) of the input port.
- Output voltage range
  - Use the supply voltage of the device that the SN74AXCH4T245 device is driving to determine the output voltage range.

10.2.3 Application Curve

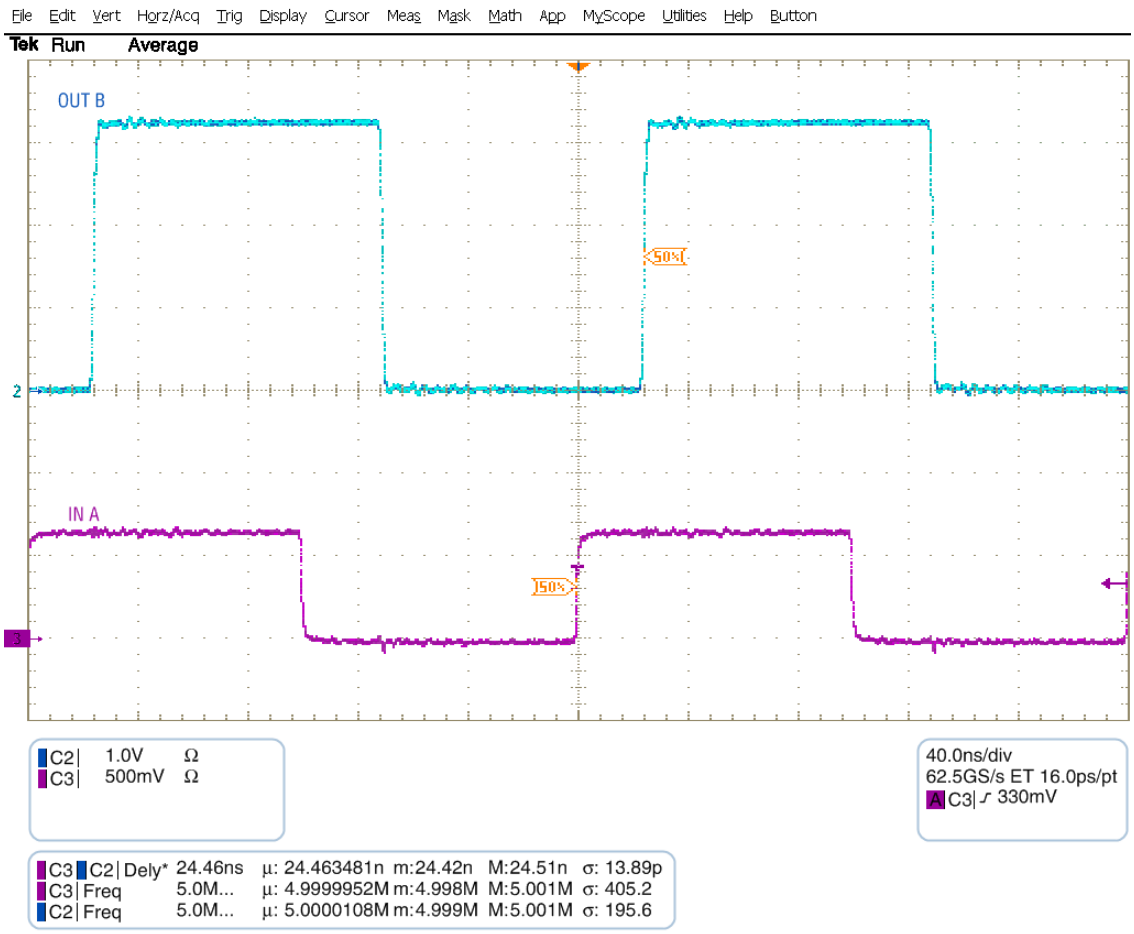

図 12. Up Translation at 2.5 MHz (0.7 V to 3.3 V)

Copyright © 2019, Texas Instruments Incorporated

11 Power Supply Recommendations

Always apply a ground reference to the GND pins first. This device is designed for glitch free power sequencing without any supply sequencing requirements such as ramp order or ramp rate.

This device was designed with various power supply sequencing methods in mind to help prevent unintended triggering of downstream devices. For more information regarding the power up glitch performance of the AXC family of level translators, see the *Glitch Free Power Sequencing With AXC Level Translators* application report

12 Layout

12.1 Layout Guidelines

To ensure reliability of the device, following common printed-circuit board layout guidelines are recommended:

- Use bypass capacitors on the power supply pins and place them as close to the device as possible.
- Use short trace lengths to avoid excessive loading.
- Do not use pullup or pulldown resistors on data inputs for devices with bus-hold circuits.

12.2 Layout Example

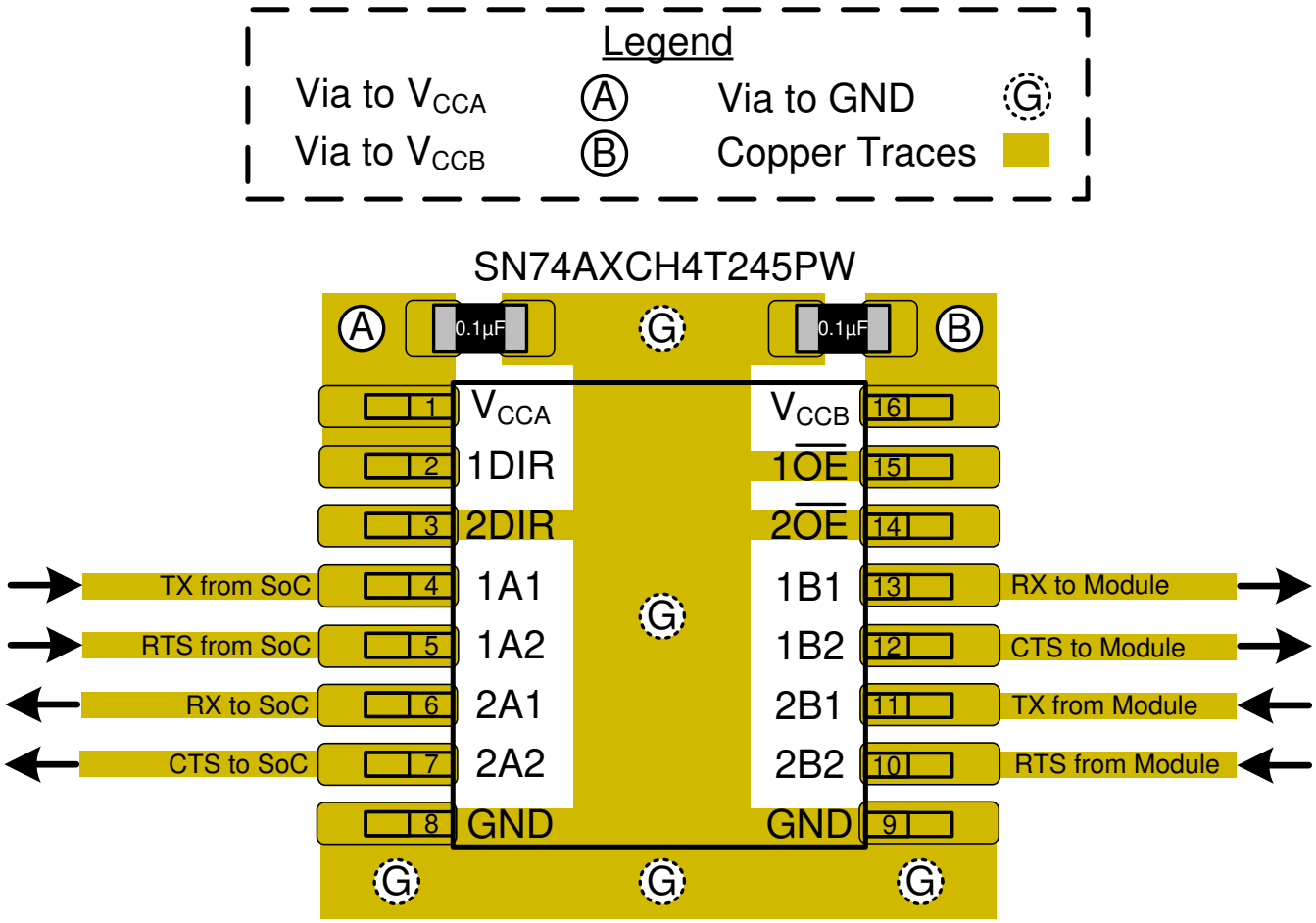

13 デバイスおよびドキュメントのサポート

13.1 関連資料

関連資料については、以下を参照してください。

テキサス・インスツルメンツ、*『低速またはフローティングCMOS入力の影響』*アプリケーション・レポート

テキサス・インスツルメンツ、*『AXCデバイス・ファミリの電源シーケンス』*アプリケーション・レポート

テキサス・インスツルメンツ、*『バス・ホールド回路を使用してフローティング入力を避けるためのシステムの考慮事項』*アプリケーション・レポート

13.2 ドキュメントの更新通知を受け取る方法

ドキュメントの更新についての通知を受け取るには、ti.comのデバイス製品フォルダを開いてください。右上の「アラートを受け取る」をクリックして登録すると、変更されたすべての製品情報に関するダイジェストを毎週受け取れます。変更の詳細については、修正されたドキュメントに含まれている改訂履歴をご覧ください。

13.3 コミュニティ・リソース

The following links connect to TI community resources. Linked contents are provided "AS IS" by the respective contributors. They do not constitute TI specifications and do not necessarily reflect TI's views; see TI's Terms of Use.

TI E2E™ Online Community ***TI's Engineer-to-Engineer (E2E) Community.*** Created to foster collaboration among engineers. At e2e.ti.com, you can ask questions, share knowledge, explore ideas and help solve problems with fellow engineers.

Design Support ***TI's Design Support*** Quickly find helpful E2E forums along with design support tools and contact information for technical support.

13.4 商標

E2E is a trademark of Texas Instruments.

13.5 静電気放電に関する注意事項

すべての集積回路は、適切なESD保護方法を用いて、取扱いと保存を行うようにして下さい。

静電気放電はわずかな性能の低下から完全なデバイスの故障に至るまで、様々な損傷を与えます。高精度の集積回路は、損傷に対して敏感であり、極めてわずかなパラメータの変化により、デバイスに規定された仕様に適合しなくなる場合があります。

13.6 Glossary

SLYZ022 — *TI Glossary*.

This glossary lists and explains terms, acronyms, and definitions.

Copyright © 2019, Texas Instruments Incorporated

14 メカニカル、パッケージ、および注文情報

以降のページには、メカニカル、パッケージ、および注文に関する情報が記載されています。この情報は、そのデバイスについて利用可能な最新のデータです。このデータは予告なく変更されることがあり、ドキュメントが改訂される場合もあります。本データシートのブラウザ版を使用されている場合は、画面左側の説明をご覧ください。

Copyright © 2019, Texas Instruments Incorporated

PACKAGING INFORMATION

Orderable part number	Status (1)	Material type (2)	Package | Pins	Package qty | Carrier	RoHS (3)	Lead finish/ Ball material (4)	MSL rating/ Peak reflow (5)	Op temp (°C)	Part marking (6)
74AXCH4T245RSVRG4.A	Active	Production	UQFN (RSV) | 16	3000 | LARGE T&R	Yes	NIPDAU	Level-1-260C-UNLIM	-40 to 125	1U7R
SN74AXCH4T245PWR	Active	Production	TSSOP (PW) | 16	2000 | LARGE T&R	Yes	NIPDAU | SN	Level-1-260C-UNLIM	-40 to 125	S4TH245
SN74AXCH4T245PWR.A	Active	Production	TSSOP (PW) | 16	2000 | LARGE T&R	Yes	NIPDAU	Level-1-260C-UNLIM	-40 to 125	S4TH245
SN74AXCH4T245RSVR	Active	Production	UQFN (RSV) | 16	3000 | LARGE T&R	Yes	NIPDAU	Level-1-260C-UNLIM	-40 to 125	1U7R
SN74AXCH4T245RSVR.A	Active	Production	UQFN (RSV) | 16	3000 | LARGE T&R	Yes	NIPDAU	Level-1-260C-UNLIM	-40 to 125	1U7R

(1) **Status:** For more details on status, see our product life cycle.

(2) **Material type:** When designated, preproduction parts are prototypes/experimental devices, and are not yet approved or released for full production. Testing and final process, including without limitation quality assurance, reliability performance testing, and/or process qualification, may not yet be complete, and this item is subject to further changes or possible discontinuation. If available for ordering, purchases will be subject to an additional waiver at checkout, and are intended for early internal evaluation purposes only. These items are sold without warranties of any kind.

(3) **RoHS values:** Yes, No, RoHS Exempt. See the TI RoHS Statement for additional information and value definition.

(4) **Lead finish/Ball material:** Parts may have multiple material finish options. Finish options are separated by a vertical ruled line. Lead finish/Ball material values may wrap to two lines if the finish value exceeds the maximum column width.

(5) **MSL rating/Peak reflow:** The moisture sensitivity level ratings and peak solder (reflow) temperatures. In the event that a part has multiple moisture sensitivity ratings, only the lowest level per JEDEC standards is shown. Refer to the shipping label for the actual reflow temperature that will be used to mount the part to the printed circuit board.

(6) **Part marking:** There may be an additional marking, which relates to the logo, the lot trace code information, or the environmental category of the part.

Multiple part markings will be inside parentheses. Only one part marking contained in parentheses and separated by a "~" will appear on a part. If a line is indented then it is a continuation of the previous line and the two combined represent the entire part marking for that device.

Important Information and Disclaimer: The information provided on this page represents TI's knowledge and belief as of the date that it is provided. TI bases its knowledge and belief on information provided by third parties, and makes no representation or warranty as to the accuracy of such information. Efforts are underway to better integrate information from third parties. TI has taken and continues to take reasonable steps to provide representative and accurate information but may not have conducted destructive testing or chemical analysis on incoming materials and chemicals. TI and TI suppliers consider certain information to be proprietary, and thus CAS numbers and other limited information may not be available for release.

In no event shall TI's liability arising out of such information exceed the total purchase price of the TI part(s) at issue in this document sold by TI to Customer on an annual basis.

TAPE AND REEL INFORMATION

REEL DIMENSIONS

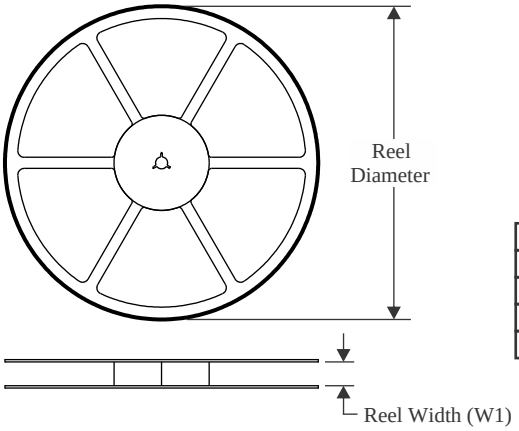

TAPE DIMENSIONS

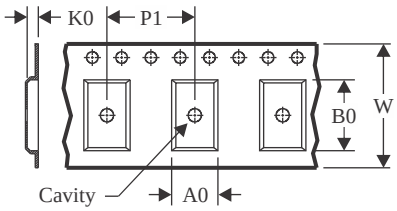

A0	Dimension designed to accommodate the component width
B0	Dimension designed to accommodate the component length
K0	Dimension designed to accommodate the component thickness
W	Overall width of the carrier tape
P1	Pitch between successive cavity centers

QUADRANT ASSIGNMENTS FOR PIN 1 ORIENTATION IN TAPE

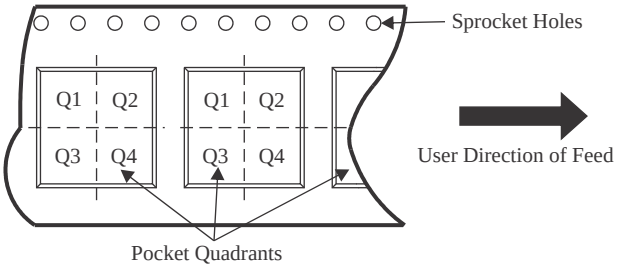

*All dimensions are nominal

Device	Package Type	Package Drawing	Pins	SPQ	Reel Diameter (mm)	Reel Width W1 (mm)	A0 (mm)	B0 (mm)	K0 (mm)	P1 (mm)	W (mm)	Pin1 Quadrant
SN74AXCH4T245PWR	TSSOP	PW	16	2000	330.0	12.4	6.9	5.3	1.6	8.0	12.0	Q1
SN74AXCH4T245PWR	TSSOP	PW	16	2000	330.0	12.4	6.9	5.6	1.6	8.0	12.0	Q1
SN74AXCH4T245RSVR	UQFN	RSV	16	3000	178.0	13.5	2.1	2.9	0.75	4.0	12.0	Q1

TAPE AND REEL BOX DIMENSIONS

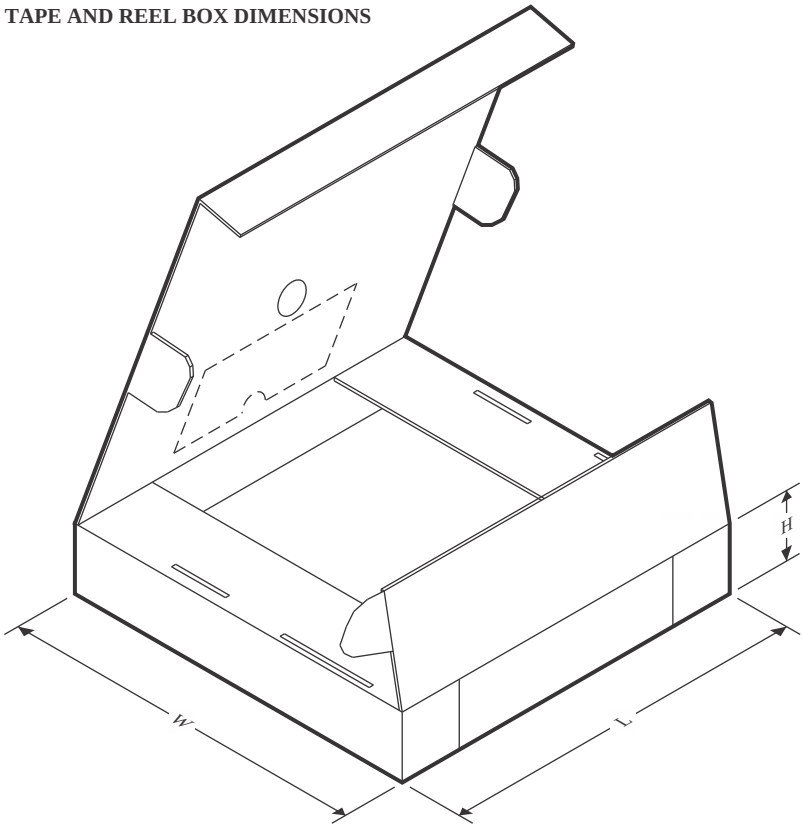

*All dimensions are nominal

Device	Package Type	Package Drawing	Pins	SPQ	Length (mm)	Width (mm)	Height (mm)
SN74AXCH4T245PWR	TSSOP	PW	16	2000	367.0	367.0	35.0
SN74AXCH4T245PWR	TSSOP	PW	16	2000	356.0	356.0	35.0
SN74AXCH4T245RSVR	UQFN	RSV	16	3000	189.0	185.0	36.0

GENERIC PACKAGE VIEW

RSV 16

UQFN - 0.55 mm max height

1.8 x 2.6, 0.4 mm pitch

ULTRA THIN QUAD FLATPACK - NO LEAD

This image is a representation of the package family, actual package may vary.
Refer to the product data sheet for package details.

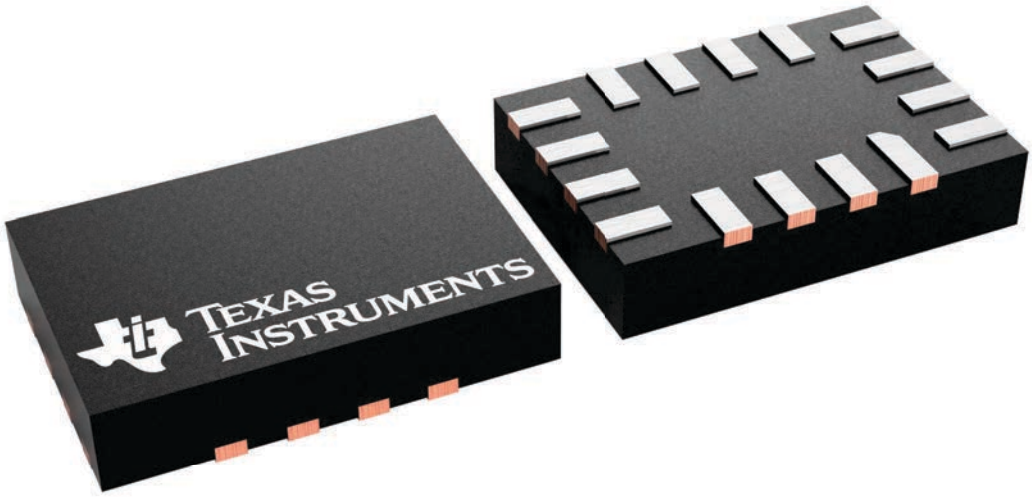

4231225/A

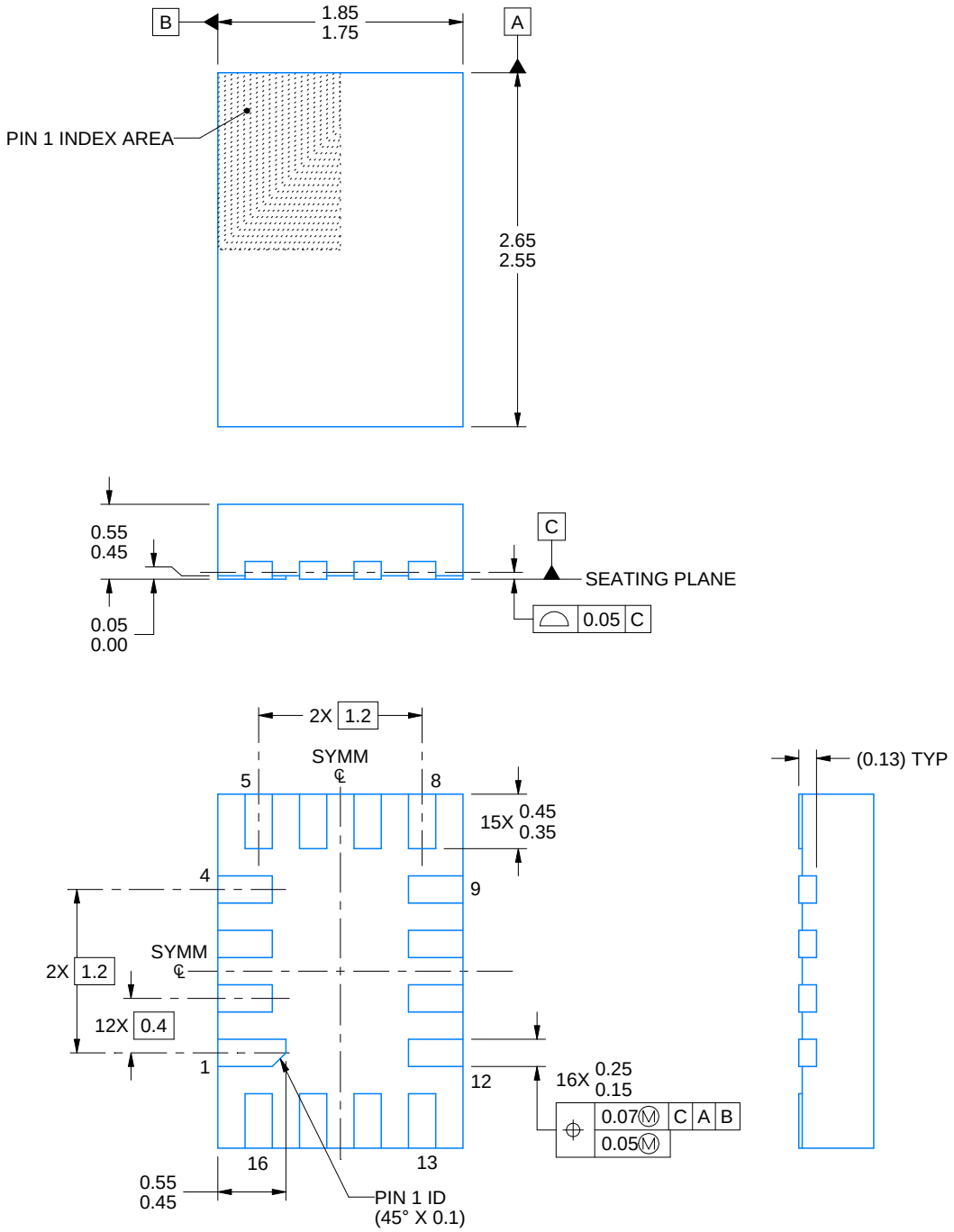

NOTES:

1. All linear dimensions are in millimeters. Any dimensions in parenthesis are for reference only. Dimensioning and tolerancing per ASME Y14.5M.
2. This drawing is subject to change without notice.

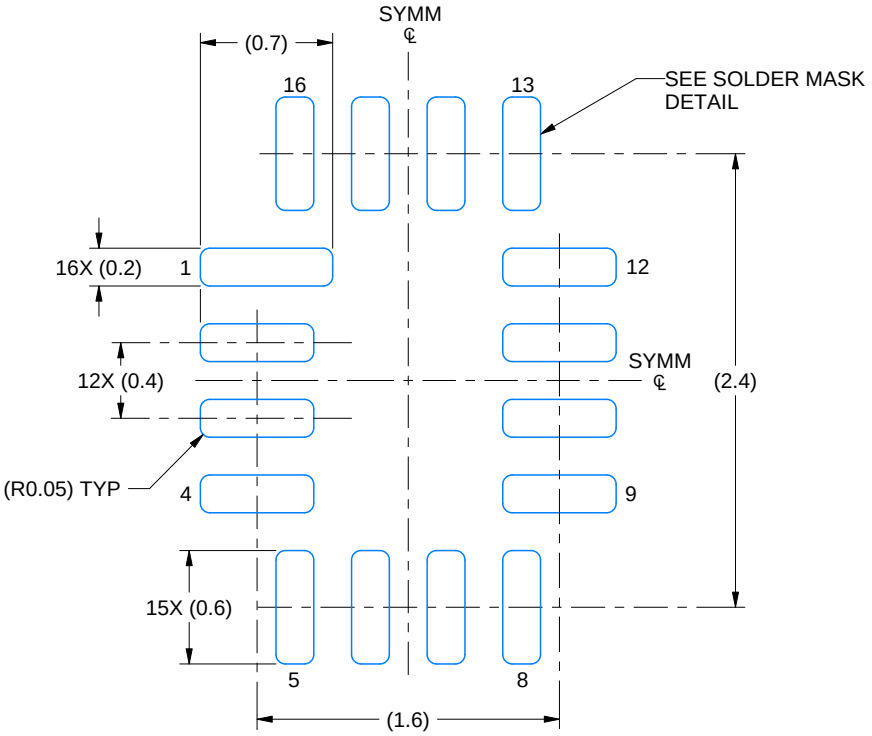

LAND PATTERN EXAMPLE
EXPOSED METAL SHOWN
SCALE: 25X

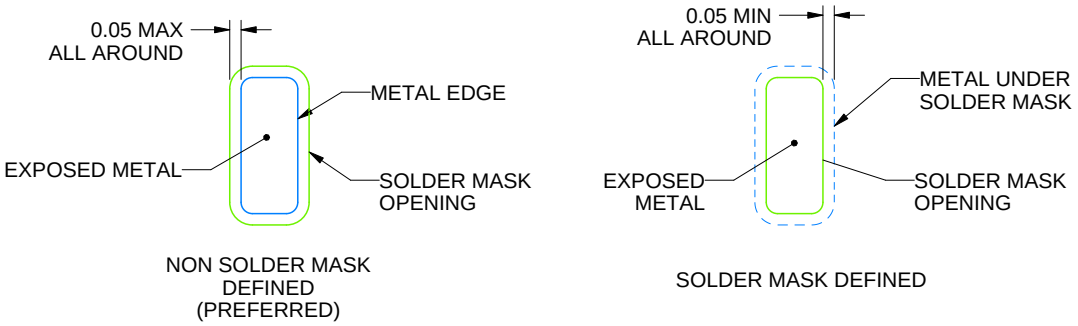

SOLDER MASK DETAILS

4220314/C 02/2020

NOTES: (continued)

3. For more information, see Texas Instruments literature number SLUA271 (www.ti.com/lit/slua271).

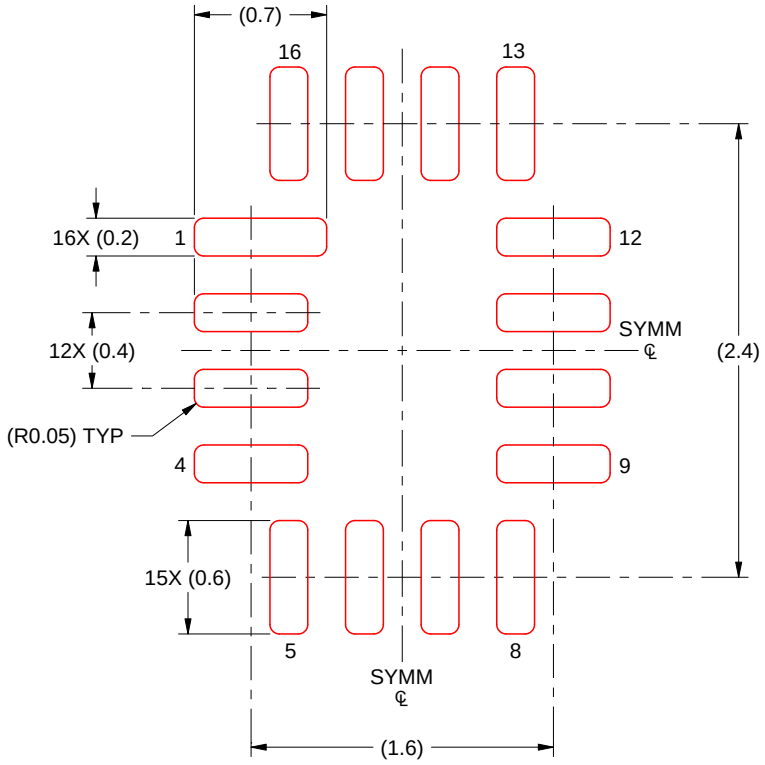

SOLDER PASTE EXAMPLE
BASED ON 0.125 MM THICK STENCIL
SCALE: 25X

4220314/C 02/2020

NOTES: (continued)

4. Laser cutting apertures with trapezoidal walls and rounded corners may offer better paste release. IPC-7525 may have alternate design recommendations.

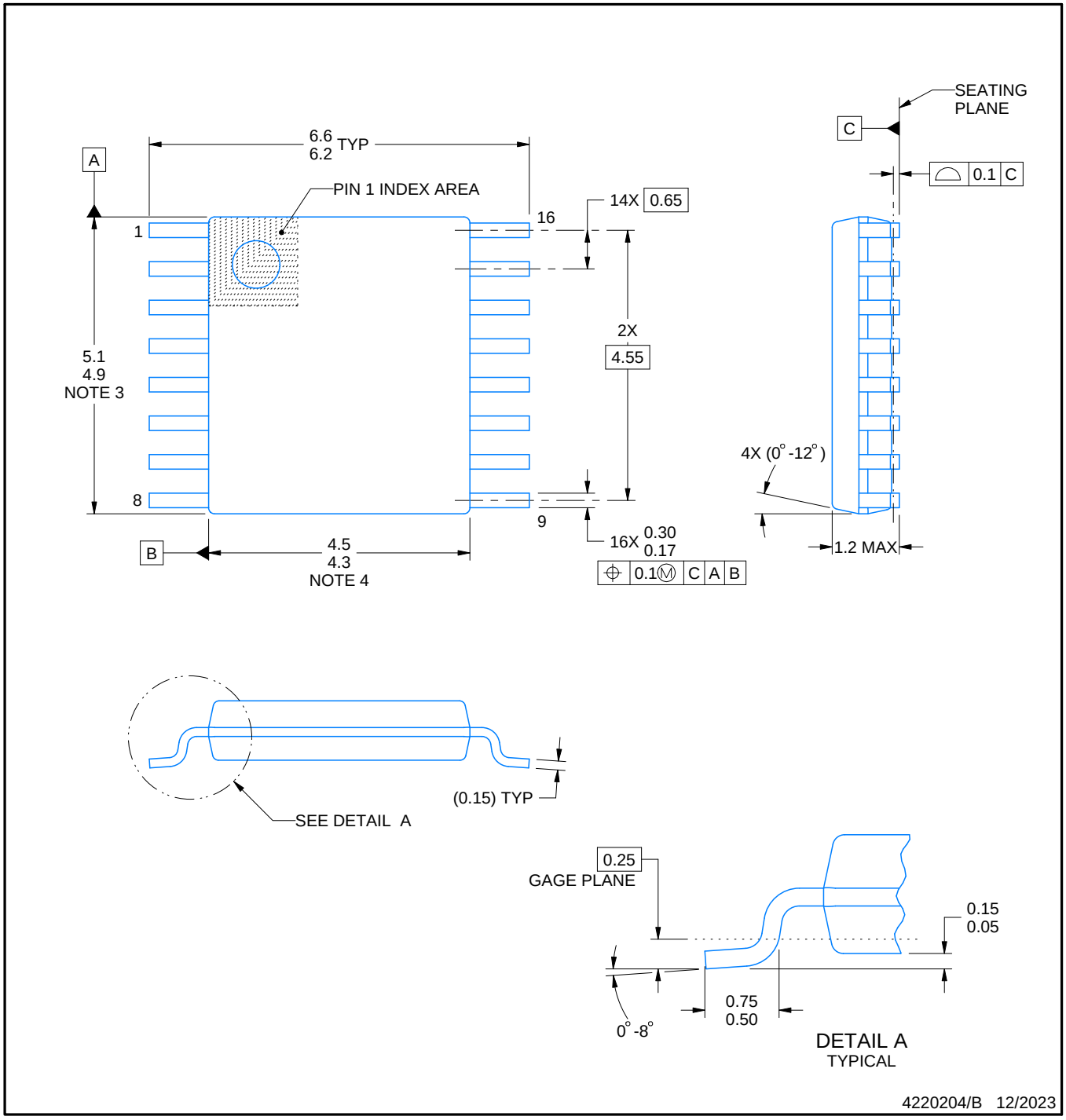

NOTES:

1. All linear dimensions are in millimeters. Any dimensions in parenthesis are for reference only. Dimensioning and tolerancing per ASME Y14.5M.
2. This drawing is subject to change without notice.
3. This dimension does not include mold flash, protrusions, or gate burrs. Mold flash, protrusions, or gate burrs shall not exceed 0.15 mm per side.
4. This dimension does not include interlead flash. Interlead flash shall not exceed 0.25 mm per side.
5. Reference JEDEC registration MO-153.

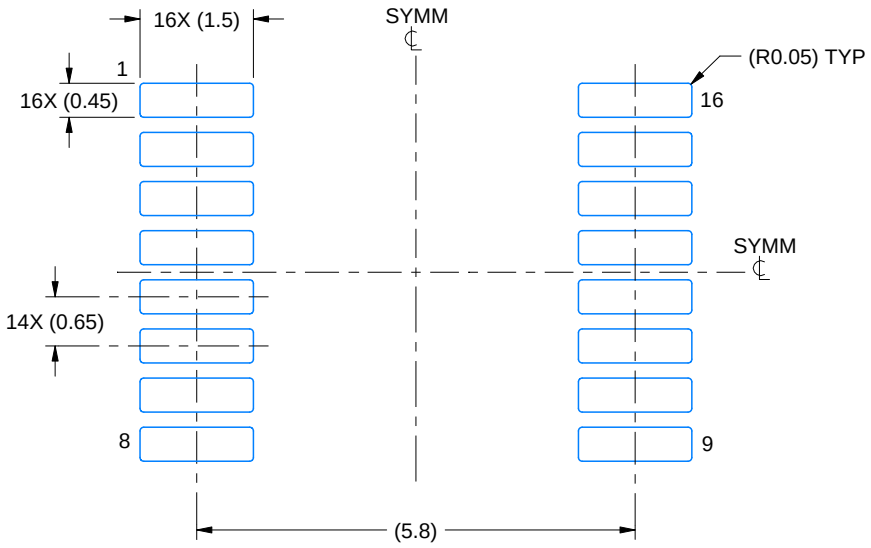

LAND PATTERN EXAMPLE
EXPOSED METAL SHOWN
SCALE: 10X

NON-SOLDER MASK DEFINED (PREFERRED)

SOLDER MASK DEFINED

SOLDER MASK DETAILS

4220204/B 12/2023

NOTES: (continued)

6. Publication IPC-7351 may have alternate designs.
7. Solder mask tolerances between and around signal pads can vary based on board fabrication site.

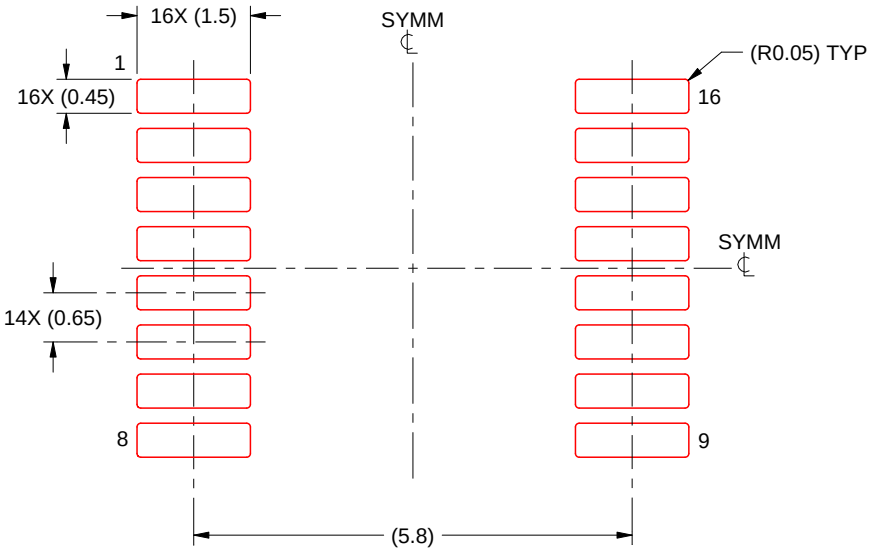

SOLDER PASTE EXAMPLE
BASED ON 0.125 mm THICK STENCIL
SCALE: 10X

4220204/B 12/2023

NOTES: (continued)

8. Laser cutting apertures with trapezoidal walls and rounded corners may offer better paste release. IPC-7525 may have alternate design recommendations.
9. Board assembly site may have different recommendations for stencil design.

重要なお知らせと免責事項

TI は、技術データと信頼性データ (データシートを含みます)、設計リソース (リファレンス デザインを含みます)、アプリケーションや設計に関する各種アドバイス、Web ツール、安全性情報、その他のリソースを、欠陥が存在する可能性のある「現状のまま」提供しており、商品性および特定目的に対する適合性の黙示保証、第三者の知的財産権の非侵害保証を含むいかなる保証も、明示的または黙示的にかかわらず拒否します。

これらのリソースは、TI 製品を使用する設計の経験を積んだ開発者への提供を意図したものです。(1) お客様のアプリケーションに適した TI 製品の選定、(2) お客様のアプリケーションの設計、検証、試験、(3) お客様のアプリケーションに該当する各種規格や、その他のあらゆる安全性、セキュリティ、規制、または他の要件への確実な適合に関する責任を、お客様のみが単独で負うものとします。

上記の各種リソースは、予告なく変更される可能性があります。これらのリソースは、リソースで説明されている TI 製品を使用するアプリケーションの開発の目的でのみ、TI はその使用をお客様に許諾します。これらのリソースに関して、他の目的で複製することや掲載することは禁止されています。TI や第三者の知的財産権のライセンスが付与されている訳ではありません。お客様は、これらのリソースを自身で使用した結果発生するあらゆる申し立て、損害、費用、損失、責任について、TI およびその代理人を完全に補償するものとし、TI は一切の責任を拒否します。

TI の製品は、 TI の販売条件 、 TI の総合的な品質ガイドライン 、 ti.com または TI 製品などに関連して提供される他の適用条件に従い提供されます。TI がこれらのリソースを提供することは、適用される TI の保証または他の保証の放棄の拡大や変更を意味するものではありません。 TI がカスタム、またはカスタマー仕様として明示的に指定していない限り、TI の製品は標準的なカタログに掲載される汎用機器です。

お客様がいかなる追加条項または代替条項を提案する場合も、TI はそれらに異議を唱え、拒否します。

Copyright © 2026, Texas Instruments Incorporated

最終更新日：2025 年 10 月