Welcome!
Texas Instruments New Product Update

- This webinar will be recorded and available at www.ti.com/npu
- Phone lines are muted
- Please post questions in the chat or contact your TI sales contact or field applications engineer

EVM DEMO OF TI'S ADS921X: FAST PRECISION ADC FAMILY FOR TEST & MEASUREMENT APPLICATIONS

New Product Update

Mike Saul, Ryan Andrews
- Precision ADCs

Agenda

- Digital control loop emerging trend
- SAR ADC drive challenge
- ADS9218 introduction
- Simplified ADC drive circuit
- ADS9218 sample circuit data
- Live EVM demo
- Resources

Please feel free to “chat” Ryan Andrews, Precision ADC Applications Engineer who is available to answer any questions you have throughout this presentation.

Industry trend digital control loop

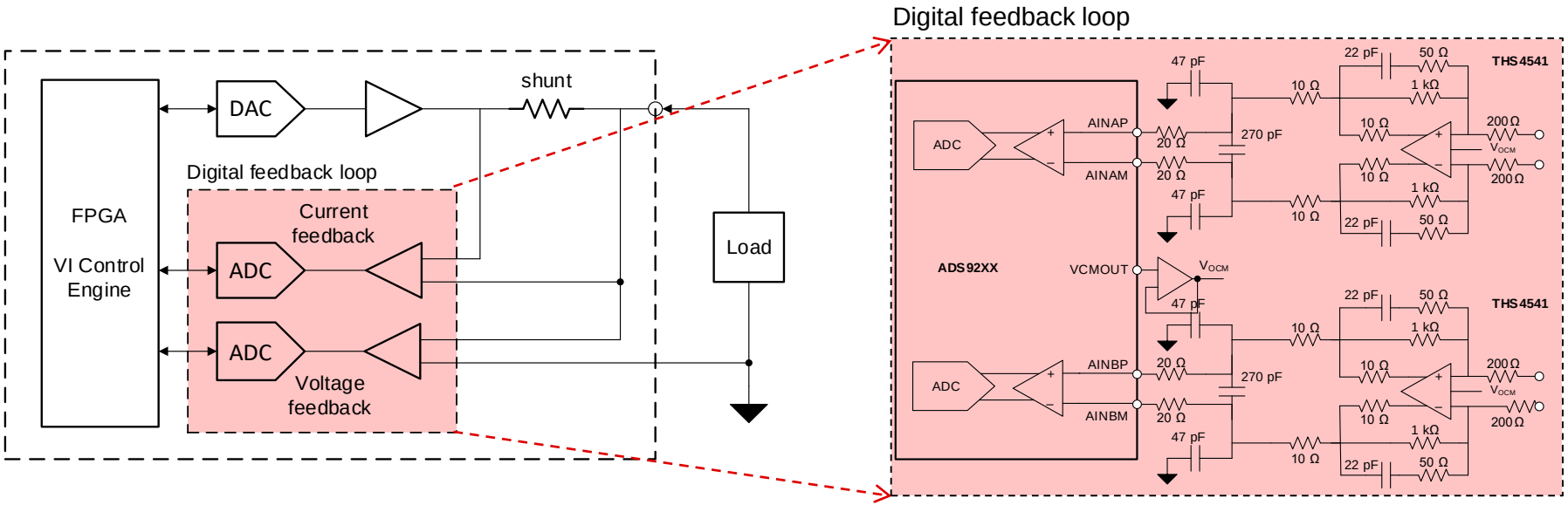

Key specs:

- **Low latency** – Faster feedback & control
- **Wide bandwidth** – Quicker transient response
- **DC precision** – Improved output accuracy

TI solution:

- **Low latency** – 20 MSPS SAR ADC with no latency
- **Wide bandwidth** – 135MHz input bandwidth
- **DC precision** – 18-bit ADC with ±1LSB INL

Low latency signal chain end equipments

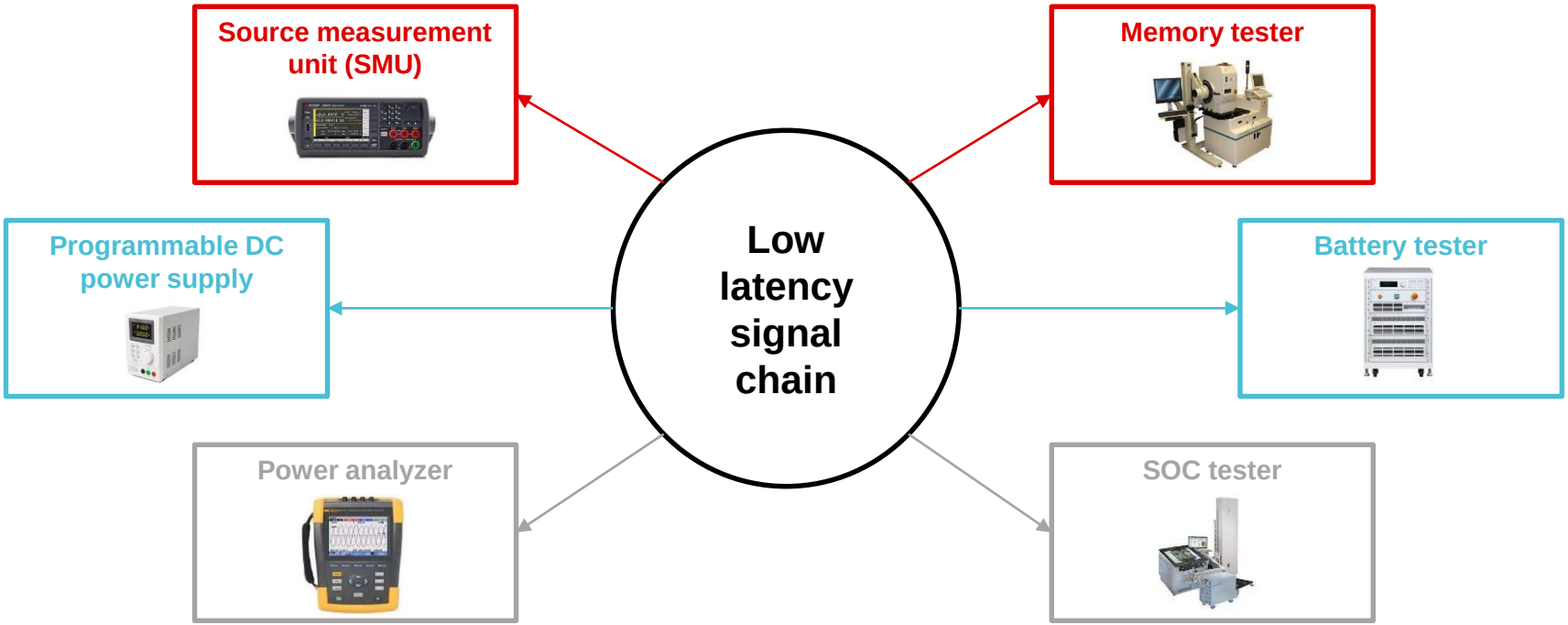

Challenge driving a low latency SAR ADC input

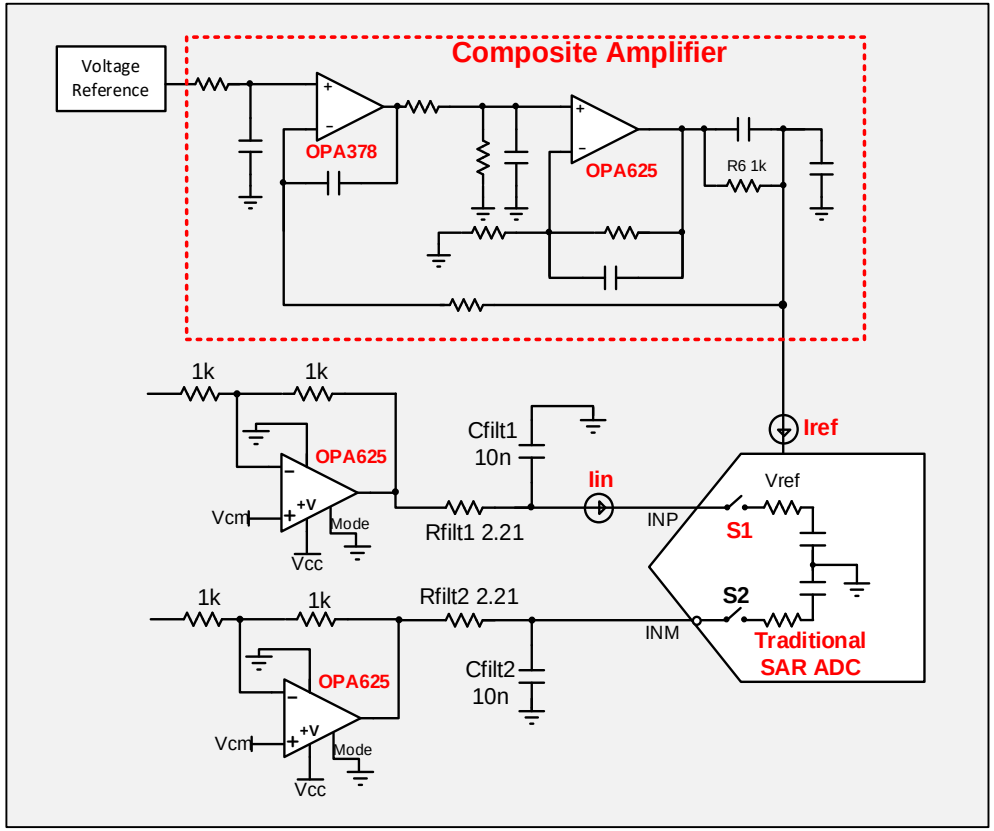

Driving traditional SAR devices:

- Input amplifiers are selected to respond to rapid current transients
- Amplifier and RC circuit need to settle in within acquisition window (Tacq)
- High bandwidth amplifier required even when signal bandwidth is lower
- Voltage reference typically requires buffer to accommodate large rapid current demand

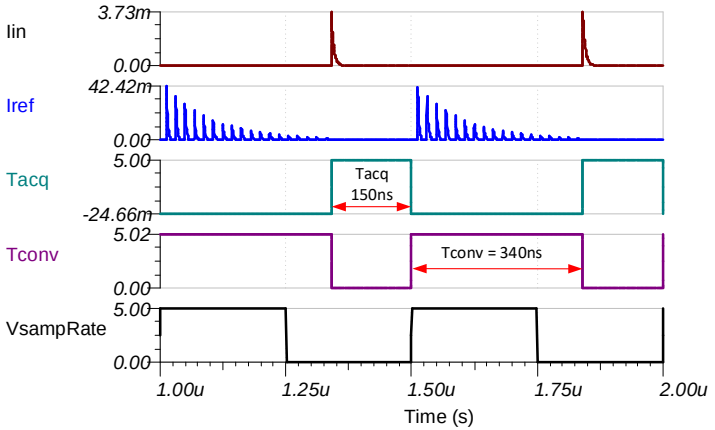

ADS9219 / 8 / 7

2-channel, 18-bit, 20/10/5 Msps/channel, with ADC driver and reference driver in 6 mm x 6 mm QFN

Features

Resolution	18
# of channels	2
Sample rate	20/10/5 Msps/channel
Interface	Serial - LVDS
AVDD	5 V analog 1.8 V core
DVDD	1.2 V / 1.8 V
Input type	Differential
Temperature range	-40°C to +125°C
Package	6 mm x 6 mm QFN

Integrated ADC and reference drivers
High-impedance analog inputs

20 Msps/channel
Low latency operation

Low power
125 mW/channel
(includes ADC driver)

Applications

- Source measurement unit
- High-speed DAQ
- Automated test equipment (ATE)
- Power analyzer
- Digital power supply

Benefits

- **Easy to drive analog inputs** with the integrated ADC driver. The external signal chain can be optimized as per system needs.
- **No latency** enables faster response time
- **Low power** as ADC driver is optimized for the ADC load
- **Best-in-class precision** over wide operating temperature range

Part #	Speed /channel
ADS9219	20 Msps
ADS9218	10 Msps
ADS9217	5 Msps

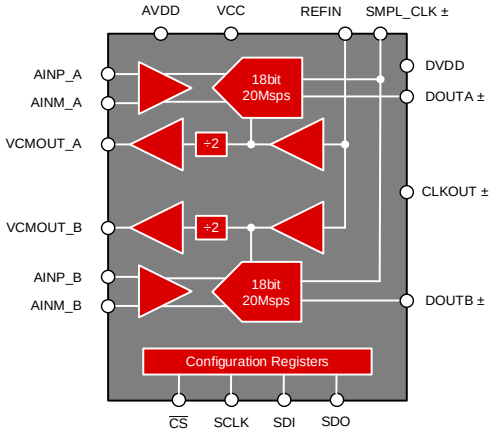

Drive solution ADS921x high input impedance

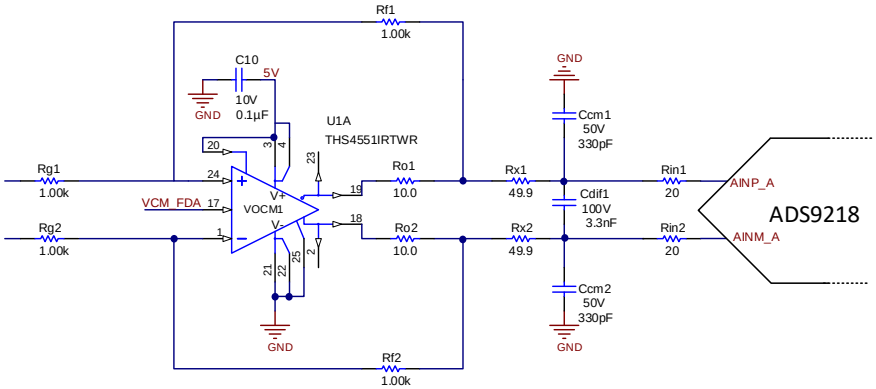

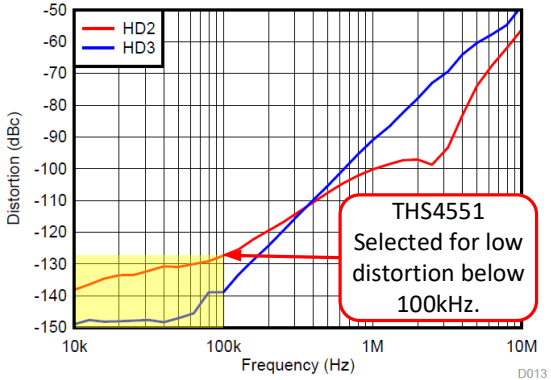

Driving the new high impedance input:

- ADS921x high impedance inputs simplifies external ADC input circuitry.
- Transients do not need to be considered for amplifier selection. Instead, the amplifier is selected on noise, distortion and DC characteristics as required by the application.
- A sample circuit optimized for low distortion using THS4551 is shown.
- Many amplifiers provide distortion curves to aid in amplifier selection as shown in the graph.

Key documents:

- ADS9218 power-optimized signal chain circuit (SBAA559)
  - ✓ Covers component selection for 100 kHz and 1 MHz signal chain options
- Simplify antialiasing filters with ADS9218 (SBAA558)
  - ✓ Compares and contrasts new generation SAR ADC to older generations

Digital control loop sample circuit performance

THS4552 + ADS9219

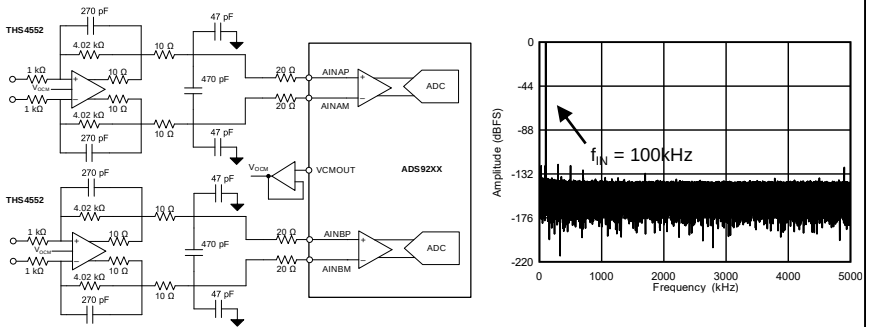

THS4541 + ADS9219

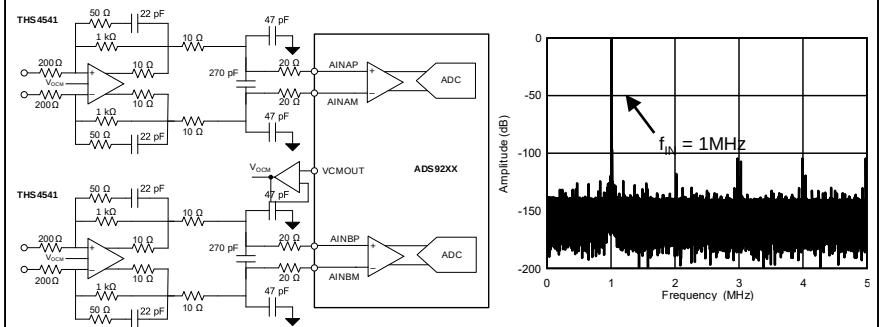

	THS4552 + ADS9219	THS4541 + ADS9219
Optimum full power signal bandwidth	Up to 300 kHz	Up to 1 MHz
SNR	95 dB (f_{IN} = 100 kHz, 6.4 V_{PP})	90.4 dB (f_{IN} = 1 MHz, 6.4 V_{PP})
THD	–119.5 dB	–104 dB

EVM demo

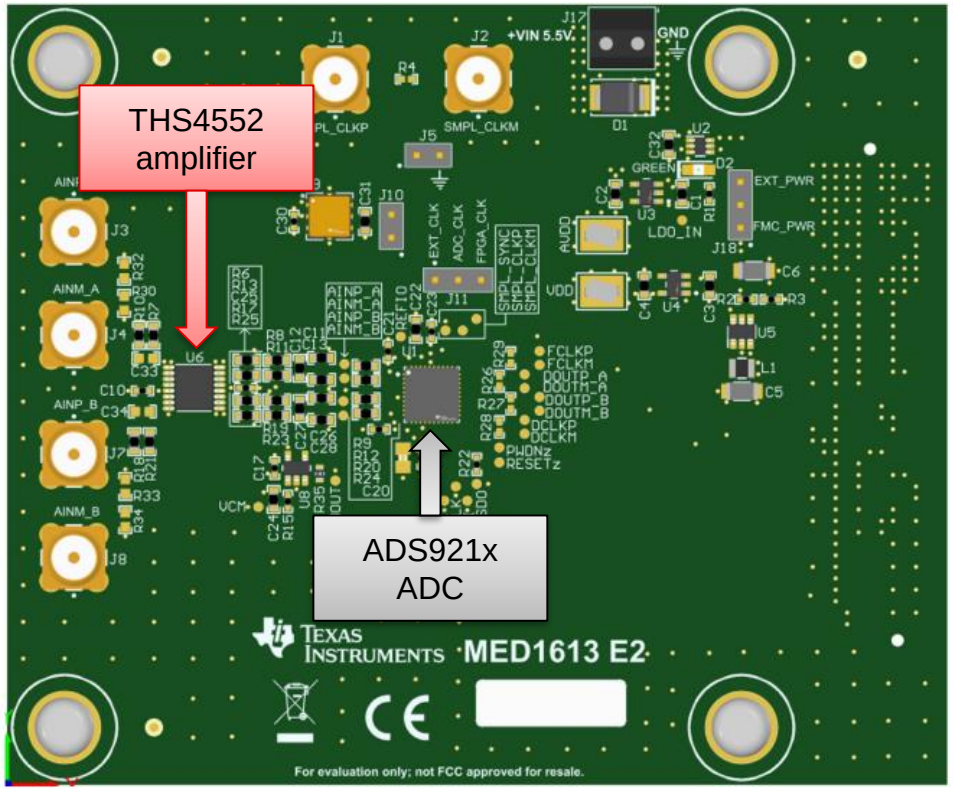
THS4552
amplifier
ADS921x
ADC
TEXAS INSTRUMENTS
MED1613 E2
For evaluation only; not FCC approved for resale.

Getting started

You can start evaluating this device leveraging the following:

Content type	Content title	Content link
Product folder	ADS9218	https://www.ti.com/product/ADS9218
EVM user's guide	ADS9218 EVM user's guide	https://www.ti.com/lit/pdf/sbau409
Analog Engineer's Circuit	ADS9218 power-optimized signal chain circuit	https://www.ti.com/lit/pdf/sbaa559
Application note	Simplify antialiasing filters with ADS9218	https://www.ti.com/lit/pdf/sbaa558
Selection tool	Precision ADC selection tool	https://www.ti.com/adcs

Visit www.ti.com/npu

For more information on the New Product Update series, calendar and archived recordings

Texas Instruments

© Copyright 2022 Texas Instruments Incorporated. All rights reserved.

This material is provided strictly “as-is,” for informational purposes only, and without any warranty.
Use of this material is subject to TI’s **Terms of Use**, viewable at TI.com

IMPORTANT NOTICE AND DISCLAIMER

TI PROVIDES TECHNICAL AND RELIABILITY DATA (INCLUDING DATA SHEETS), DESIGN RESOURCES (INCLUDING REFERENCE DESIGNS), APPLICATION OR OTHER DESIGN ADVICE, WEB TOOLS, SAFETY INFORMATION, AND OTHER RESOURCES “AS IS” AND WITH ALL FAULTS, AND DISCLAIMS ALL WARRANTIES, EXPRESS AND IMPLIED, INCLUDING WITHOUT LIMITATION ANY IMPLIED WARRANTIES OF MERCHANTABILITY, FITNESS FOR A PARTICULAR PURPOSE OR NON-INFRINGEMENT OF THIRD PARTY INTELLECTUAL PROPERTY RIGHTS.

These resources are intended for skilled developers designing with TI products. You are solely responsible for (1) selecting the appropriate TI products for your application, (2) designing, validating and testing your application, and (3) ensuring your application meets applicable standards, and any other safety, security, regulatory or other requirements.

These resources are subject to change without notice. TI grants you permission to use these resources only for development of an application that uses the TI products described in the resource. Other reproduction and display of these resources is prohibited. No license is granted to any other TI intellectual property right or to any third party intellectual property right. TI disclaims responsibility for, and you will fully indemnify TI and its representatives against, any claims, damages, costs, losses, and liabilities arising out of your use of these resources.

TI’s products are provided subject to TI’s Terms of Sale or other applicable terms available either on ti.com or provided in conjunction with such TI products. TI’s provision of these resources does not expand or otherwise alter TI’s applicable warranties or warranty disclaimers for TI products.

TI objects to and rejects any additional or different terms you may have proposed.

Mailing Address: Texas Instruments, Post Office Box 655303, Dallas, Texas 75265
Copyright © 2023, Texas Instruments Incorporated