TI High-voltage Seminar

Replacing optical and electro-mechanical switches with TI's latest isolation technologies

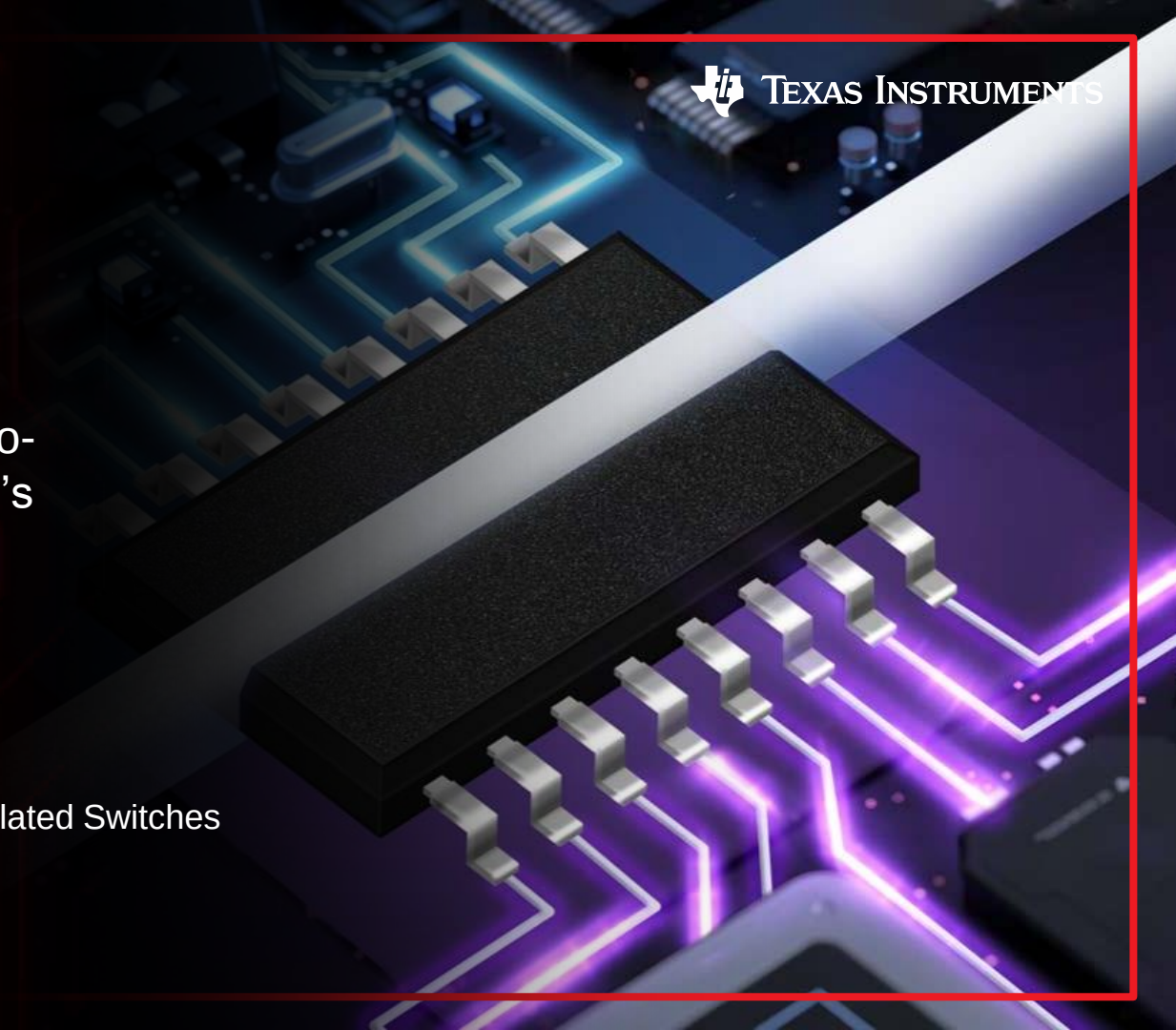

Neel Seshan

Systems and Marketing Manager, Isolated Switches

Manasa Gadiyar

Systems Engineer, Isolation

Agenda

- Introduction to isolated switching
- TI's isolation technology
- Overview and use cases of TI's portfolios of opto-emulator switches & solid-state relays

Isolated switches

Control high voltage load with a low voltage signal

Handle ground potential differences between communicating subsystems

Protect low-voltage circuitry from high voltages

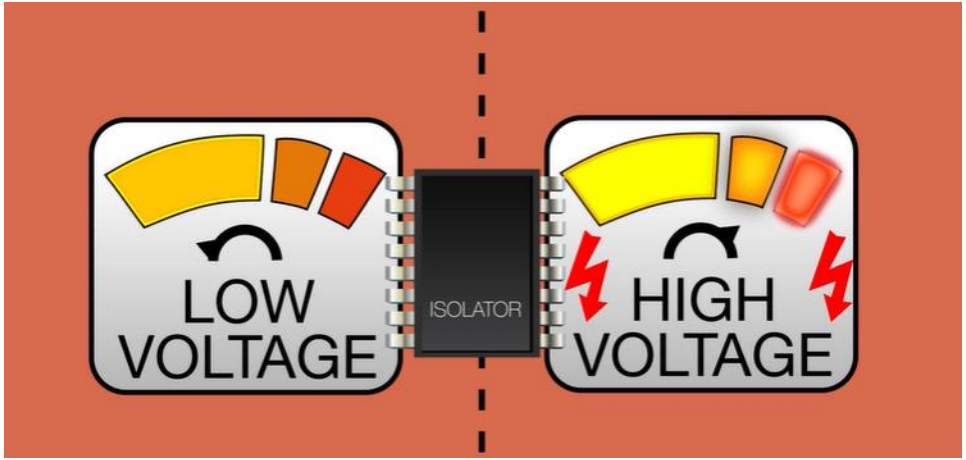

Traditional isolated switches

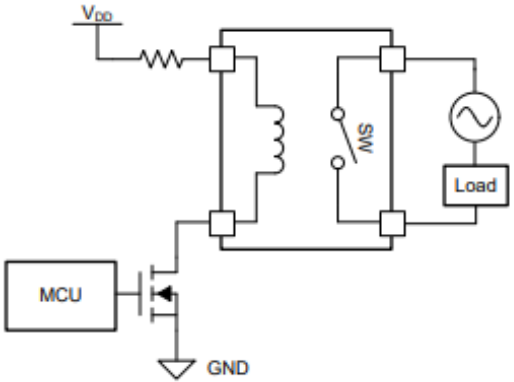

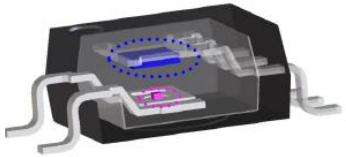

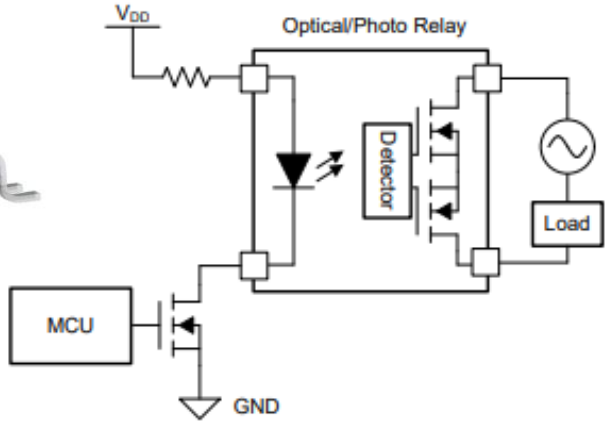

Electro-mechanical relays (EMR)

Solenoid based action for mechanical switching

Optical relays (solid-state relays)

Optical coupling with solid-state switching

Electro-mechanical relays

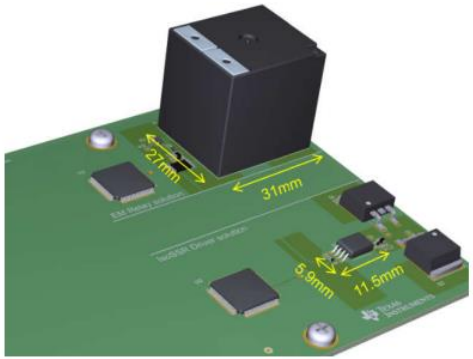

- **Electrical isolation:**
  - Electro-mechanical relays use metal contacts instead of integrated or external MOSFETs. This eliminates leakage current within the device due to the ability to implement a pure mechanical disconnect, thereby providing excellent electrical isolation
- **Cost-effective:**
  - Simpler construction of devices leads electro-mechanical relays to be relatively cheaper then solid-state relays
- **Noise immunity:**
  - Less susceptible to electromagnetic interference thereby suitable for noisy environments
- **Bulky:**
  - Electro-mechanical relays usually have larger size (including height) because the package needs to accommodate space for all of the parts within the device, such as the metal contacts, coil, and spring

Electro-mechanical relays (EMRs)

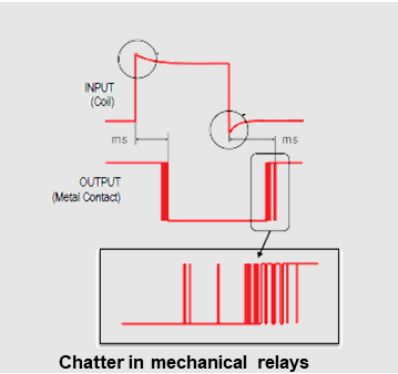

Chatter in mechanical relays

- **Slower switching speed:**
  - Current flowing through the metal contacts must reach a certain condition before switching to an open/closed state (ex. not oscillating when closed), thereby requiring a longer settling time
- **Power hungry:**
  - Current required to magnetize the coils in the electro-mechanical relay may be large thereby increasing the power consumption of the system
- **Noisy:**
  - Variations on the voltage or current supply can cause opening and closing of the contacts know as relay chatter, that reduces the life-span of the device
- **Reliability concern:**
  - Metal contacts experience wear and tear, such as welding shut. This limits the number of switching cycles before experiencing complete failure, thus limiting overall reliability

Optical relays and photo relays

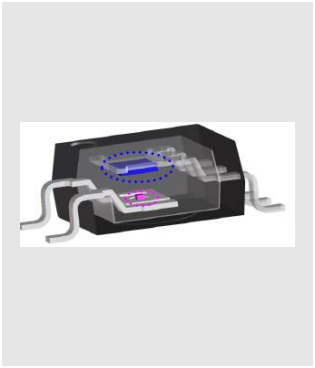

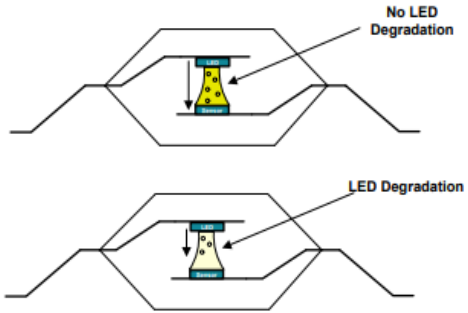

- **Small size:**
  - Simpler construction of photo-relays leads to smaller package foot-prints
- **Fast switching:**
  - Opto-relays switch faster than mechanical relays with minimal chatter/noise on the output switching FETs
- **Low EMI:**
  - Since light is used to transfer data from LED to the sensor, the emissions and immunity performance is better than other solid-state relays
- **LED degradation:**
  - LED's are subject to light decay, which is the reduction of light output capacity due to extreme conditions, such as over-temperature or over-current. As a result, the LED within a photo relay does not have enough luminosity to drive a gate voltage, which limits the switch functionality of the device

Optical relays and photo relays

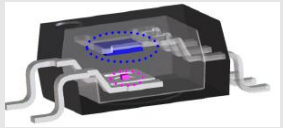

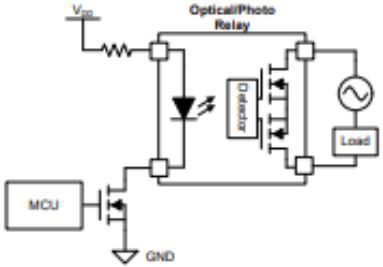

- **Limited temperature range:**
  - Typical opto-relays have limited temperature range to ensure high performance (ex. timing). To achieve higher temperature ranges, most photo relays have to use more expensive materials, which is not practical in most applications
- **External circuit:**
  - Photo relays need an external current-limiting resistor and often use additional FETs to manage the LED's on or off state

Texas Instruments

Isolated switches are everywhere

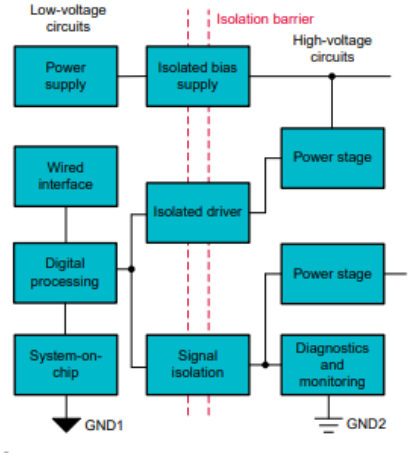

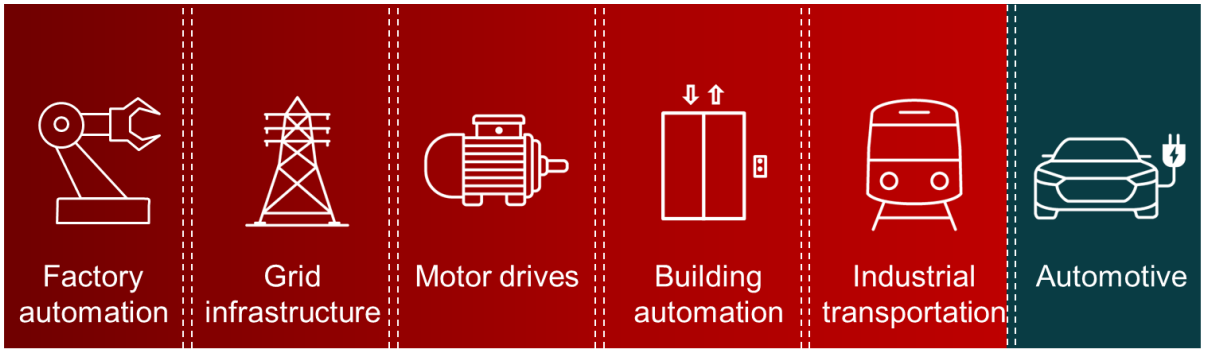

TI’s isolation technologies | Capacitive

- Capacitive isolation technology based on AC signal transfer across a dielectric
- TI’s capacitive isolators are constructed using an SiO_2 dielectric, which provides very high dielectric strength
- SiO_2 is an inorganic material → extremely stable over moisture and temperature
- Proprietary methodology for multilayered capacitor and multilayer passivation improves isolator quality and reliability by reducing the dependence of high-voltage performance on any single layer
- Supports working voltages (V_{IOWM}) of 2 kV_{RMS}, withstands isolation voltages (V_{ISO}) of 7.5 kV_{RMS} and has a surge voltage capability of 12.8 kV_{PK}

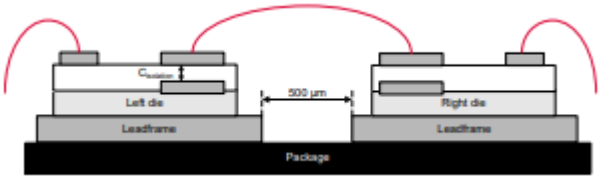

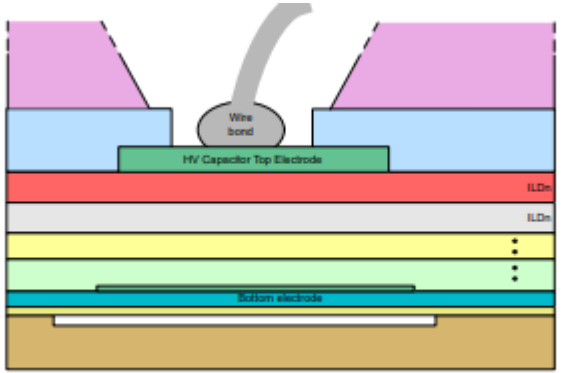

Texas Instruments

TI's isolation technologies | Inductive

- Magnetic isolation is typically used in applications that require high-frequency DC/DC power conversion
- TI uses a proprietary multichip module approach for magnetic isolation, which co-packages a high-performance planar transformer with an isolated power stage and dedicated controller die
- Transformers with either a high-performance ferrite core to improve coupling and transformer efficiency, or an air-core to save cost and complexity when the application requires only modest power transfer
- By combining both signals and power transfer over the same integrated transformer coil, both solution cost and size are minimized

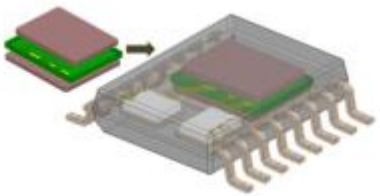

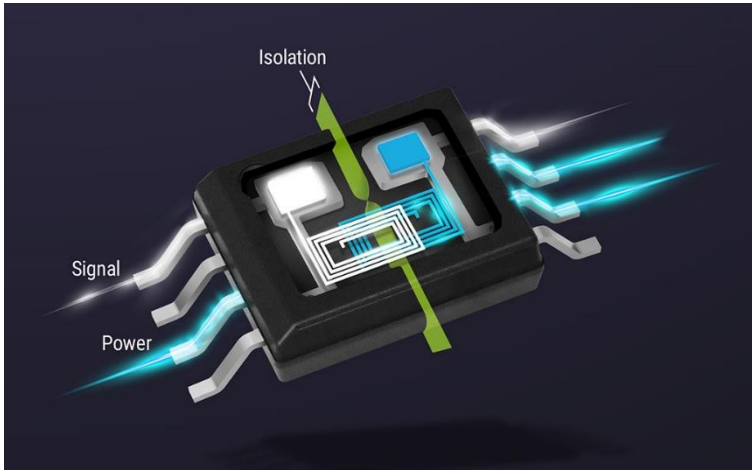

TI's opto-emulator switches & solid state relays (SSRs)

Opto-emulator switches

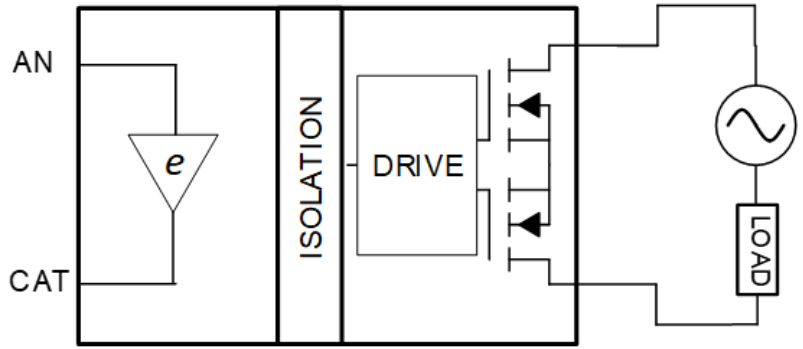

Isolated switches and drivers

External FET Driver

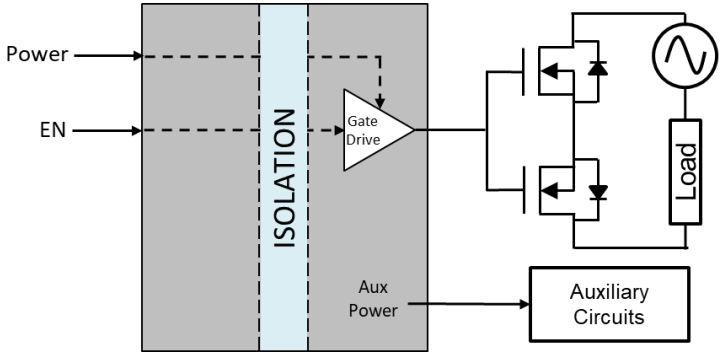

Internal FET Switch

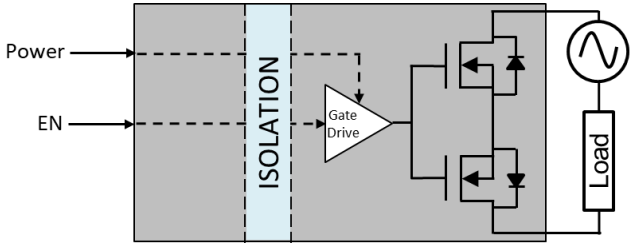

Texas Instruments

Introduction to opto-emulators | ISOM86xx

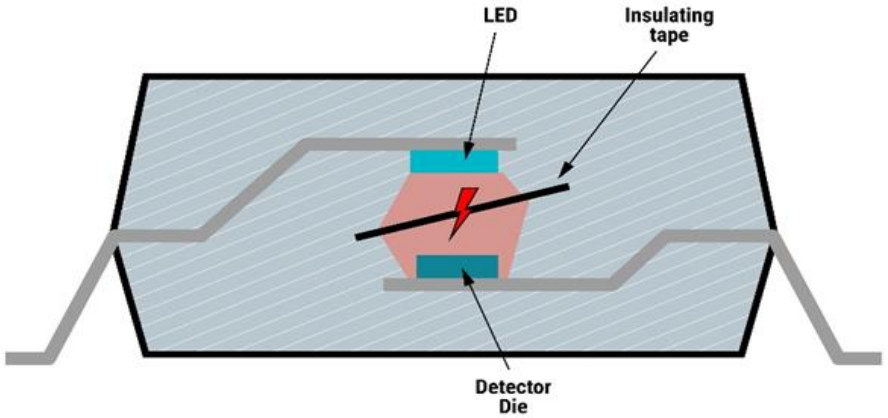

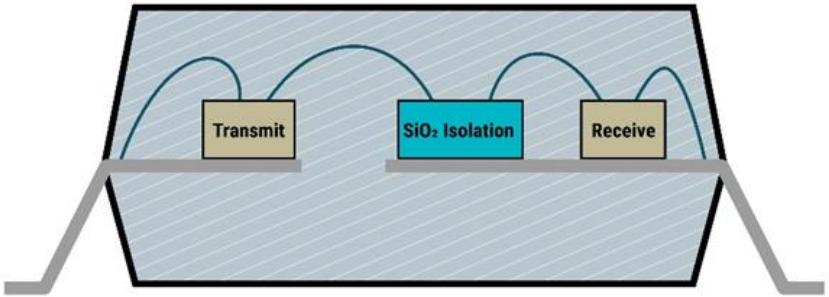

- Epoxy dielectric for isolation
- LED signal transmission, affected by aging
- GaAs LED bias current increases with temperature and lifetime operation, requires compensation
- Slower switching speeds

- SiO_2 dielectric for robust isolation
- Diode emulated, no physical GaAs LED
- 'LED emulator' input eliminates over-compensation on bias current across temperature and lifetime operation
- Faster switching speeds

Texas Instruments

Switchable termination on CAN/RS485

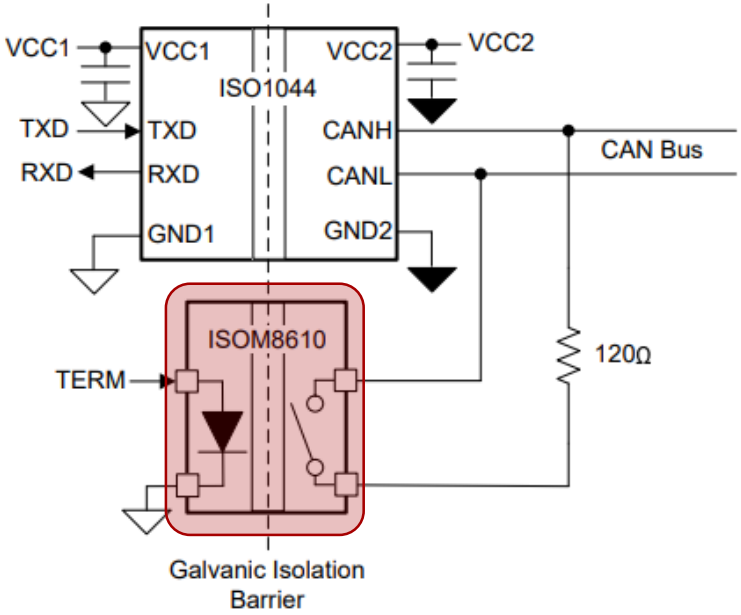

- Software configurable termination on the CAN/RS485 bus.
- Enable/disable termination for multi-node configs on the CAN/RS485 lines
- Enable half/full duplex designs with isolated switches
- TERM = High enables the termination; TERM = Low disables termination
- High common mode blocking voltage of ±70V, low off-state leakage <1uA

Low power switching in intrusion alarms

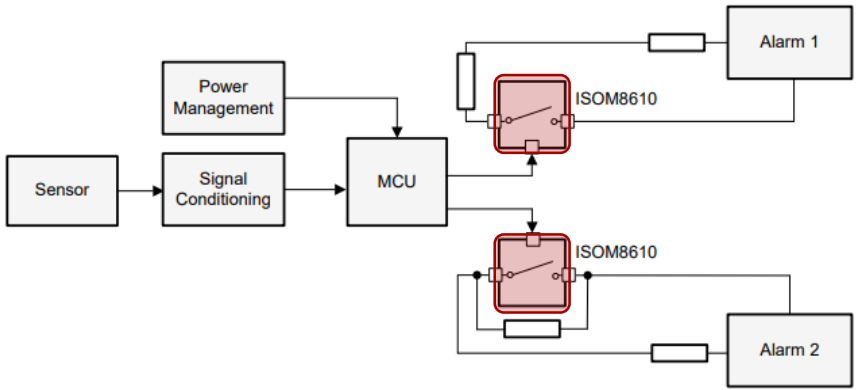

- Detect any disturbance from sensors placed in spaces of interest
- Based on architecture, normally closed outputs may be needed
- ISOM86xx does not need to be compensated for 3x-4x LED current deration over lifetime operation
- Ultra low-IF (0.8mA) very useful when sensors directly interface with the ISOM86xx

Switch burden resistor in universal input module

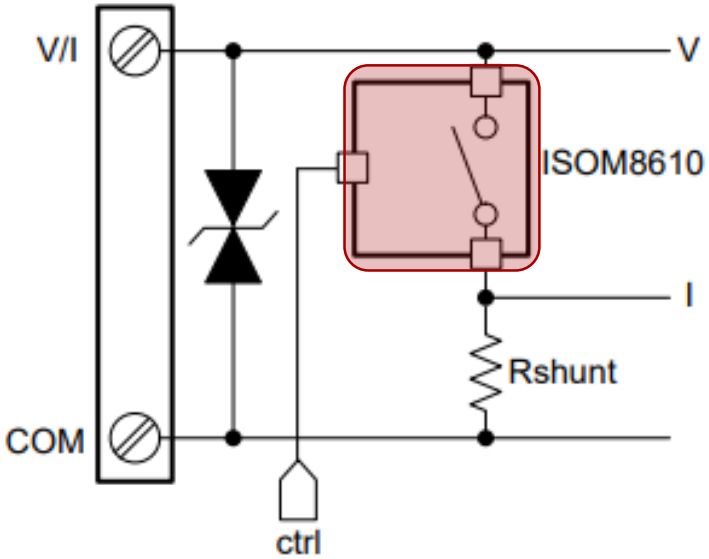

- Enable/disable precision burden resistors on Analog input module
- Rshunt is set for current input, disabled for voltage input
- When ctrl = High, Rshunt set for 4-20mA current input mode
- When ctrl = Low, Rshunt set for ±10V voltage input mode
- Blocks high voltage common mode up-to 70V with <1uA leakage
- Does not require high voltage supply on switch side

Texas Instruments

Channel-to-channel isolated input modules

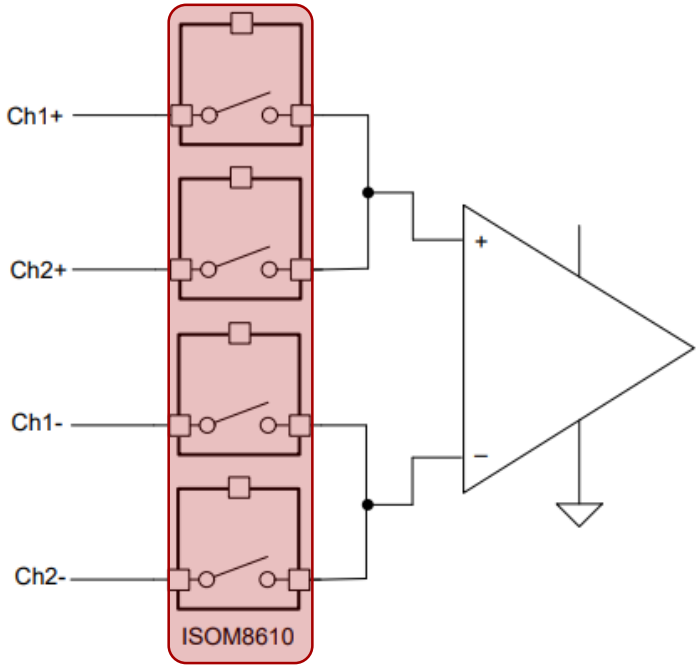

- Each differential pair multiplexed using ISOM86xx
- High voltage blocking in Channel-to-channel isolated input modules
- Up to 70V blocking with no secondary side high voltage supply
- ISOM86xx offers best-in-class switching time <200µs
- Blocks high voltage common mode up to 70V with <1uA leakage

Texas Instruments

Compact isolated digital output modules

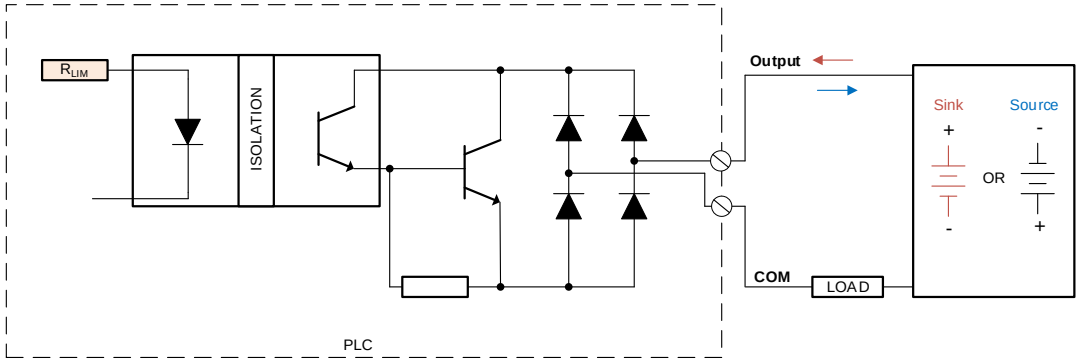

- Source/sink capable digital output modules use multiple discrete elements for high capacity
- Generally use photo-coupler with additional transistor for higher capacity, bridge stage for bidirectional capability and sometimes Zener diodes for high voltage blocking
- ISOM86xx can displace all these components with symmetrical 70V blocking and 150mA current capacity

Texas Instruments

Compact isolated digital output modules

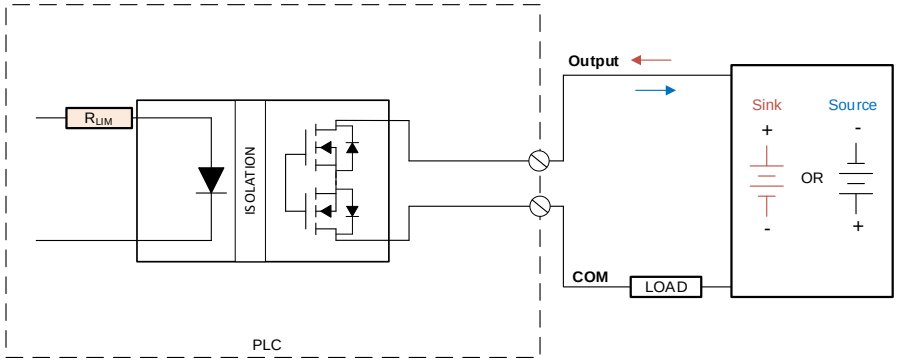

- Source/sink capable digital output modules use multiple discrete elements for high capacity
- Generally use photo-coupler with additional transistor for higher capacity, bridge stage for bidirectional capability and sometimes Zener diodes for high voltage blocking
- ISOM86xx can displace all these components with symmetrical 70V blocking and 150mA current capacity

ISOM86xx benefits over optocoupler switches

Robust performance across temp

Opto performance varies widely across temperature. Customers are forced to design for worst case (driving harder) leading to increased power consumption and decreased lifetime. **Opto-emulators can enable simpler design with lower device variance.**

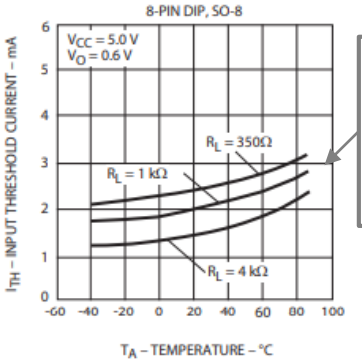

80% Typical Input threshold variation across temp

Reliable isolation

Part to part variation and skew is known to be high in optocouplers. Opto-emulators have FIT (failure in time) rates that are order of magnitudes stronger than optocouplers.

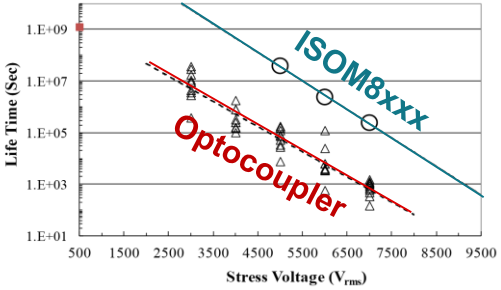

Optocoupler failure variation versus TI's consistent performance w/ SiO_2 dielectric

Lower power budgets

Opto-couplers consume as much as 10mA per channel due to deration of the LED over lifetime operation.

Engineers need to overdesign for lifetime operation, and this factor can be as high as 3x to 4x of rated currents.

The deration factors are not readily available on the datasheet, making it extremely challenging for the system design to work for lifetime operation.

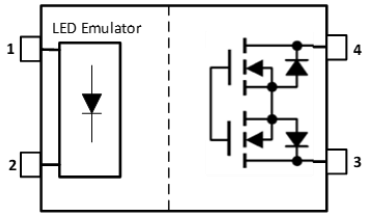

Getting started with opto-emulator switches

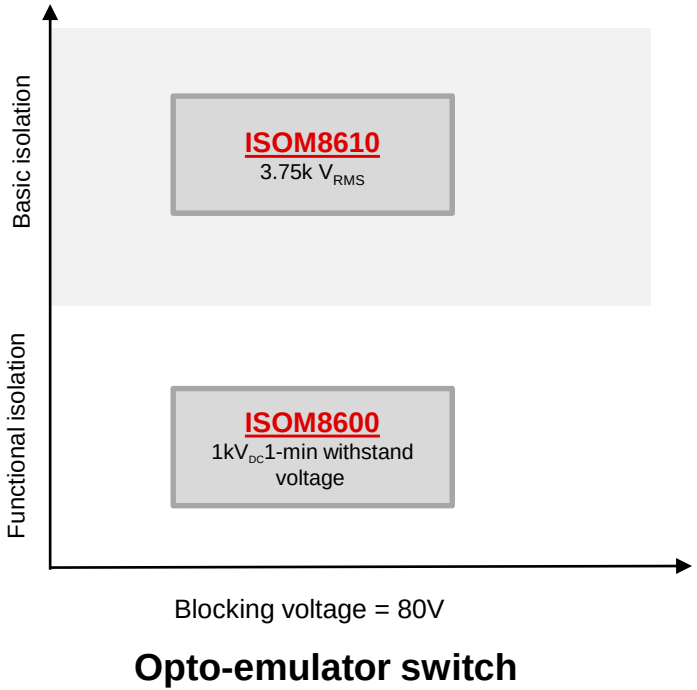

Opto-emulator switch

Technical Collateral
Upgrading Relays With Opto-Emulator Switch
Upgrading your designs with TI's Pin-to-Pin Opto-emulator switch: ISOM8610
Demystifying Isolation Certification Standards: Optocouplers vs Opto-emulators
Opto-emulators explained: Why you should upgrade your optocoupler technology
Introduction to Opto-Emulators
FAQ Forum : Opto-emulators

Evaluation boards
ISOM8610DFGEVM — ISOM8610DFG, Single Channel Opto-emulator switch with integrated FET Evaluation Module

Texas Instruments

TI's opto-emulator switches & solid state relays

Opto-emulator switches

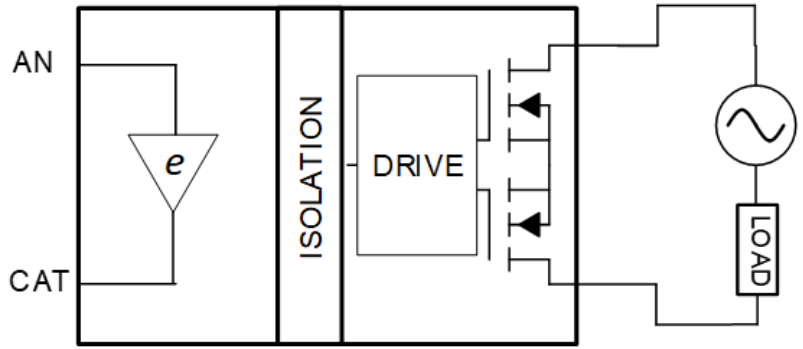

Isolated switches and drivers

External FET Driver

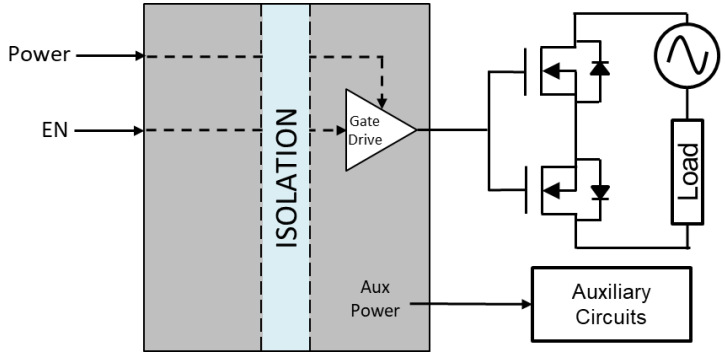

Internal FET Switch

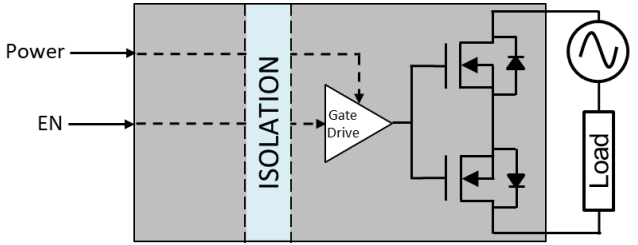

Texas Instruments

Isolated switch driver integration | TPSI305x/-Q1

TPSI305x/-Q1 is an isolated switch driver with integrated power supply that provides a single chip solution for FET driving.

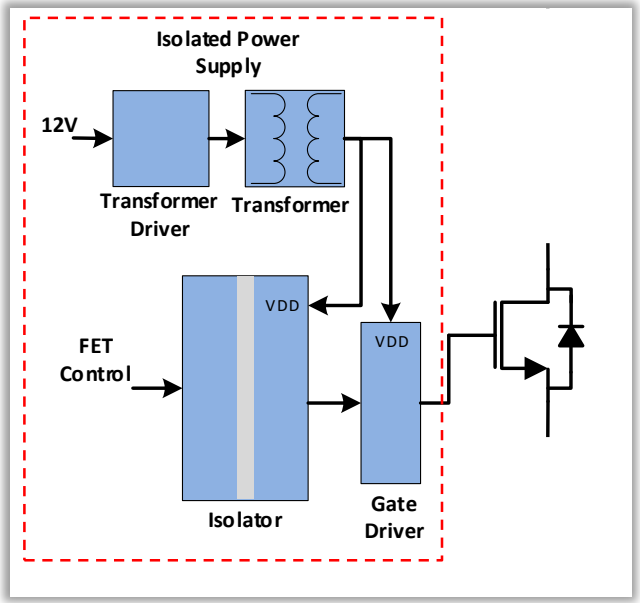

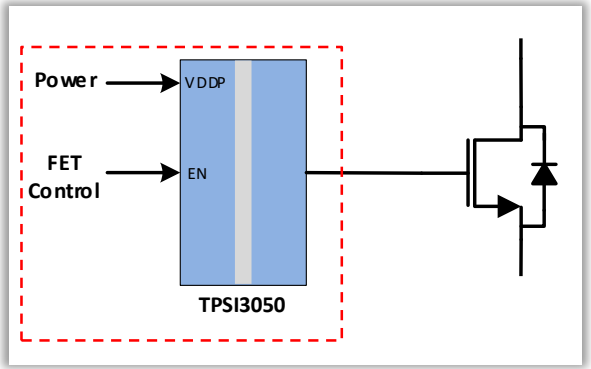

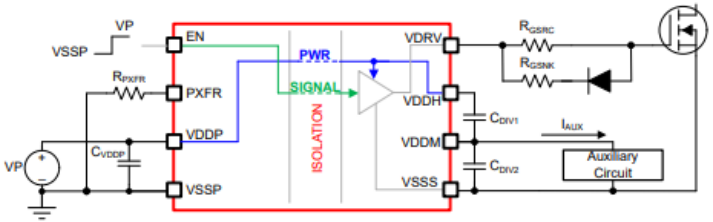

Texas Instruments

Isolated switch driver integration with feedback | TPSI310x/-Q1

- Back-channel communication offers diagnostic information to LV MCU
- No need for digital isolator

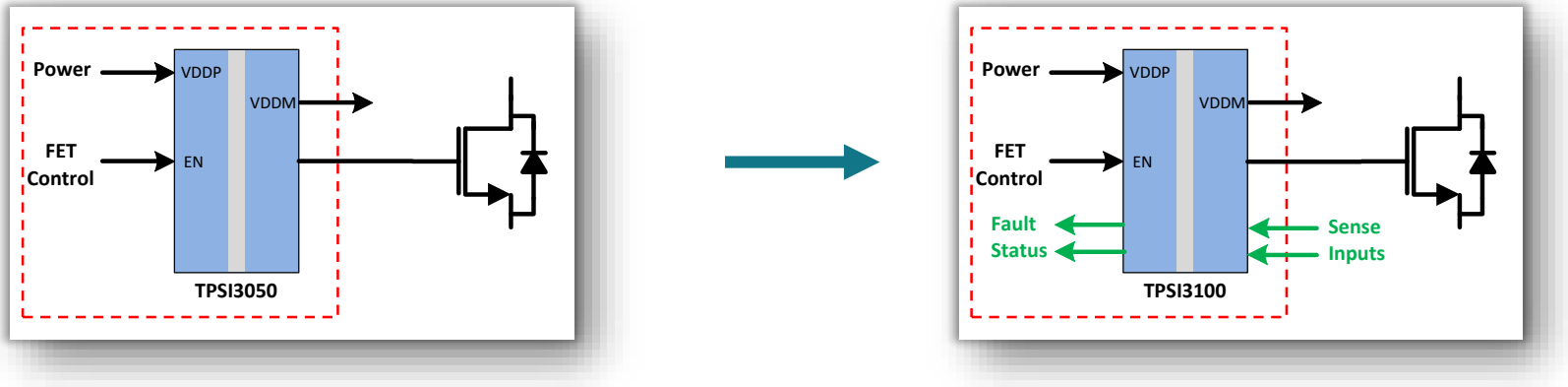

Texas Instruments

Isolated switch driver in power distribution unit

With 1.5A/3A peak (source/sink) drive capability can switch multiple FETs as in a PDU.

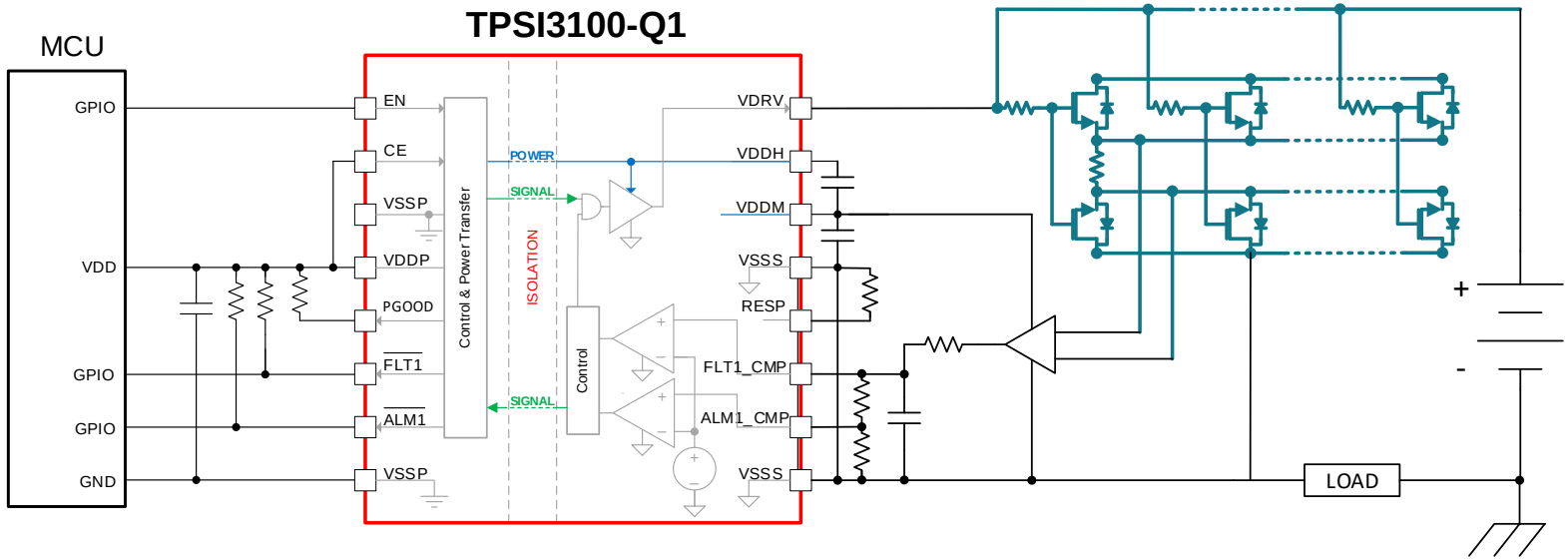

Texas Instruments

Passive pre-charge with overcurrent protection

Passive pre-charge with TPSI3100-Q1 offers a low complexity and high reliability solution.

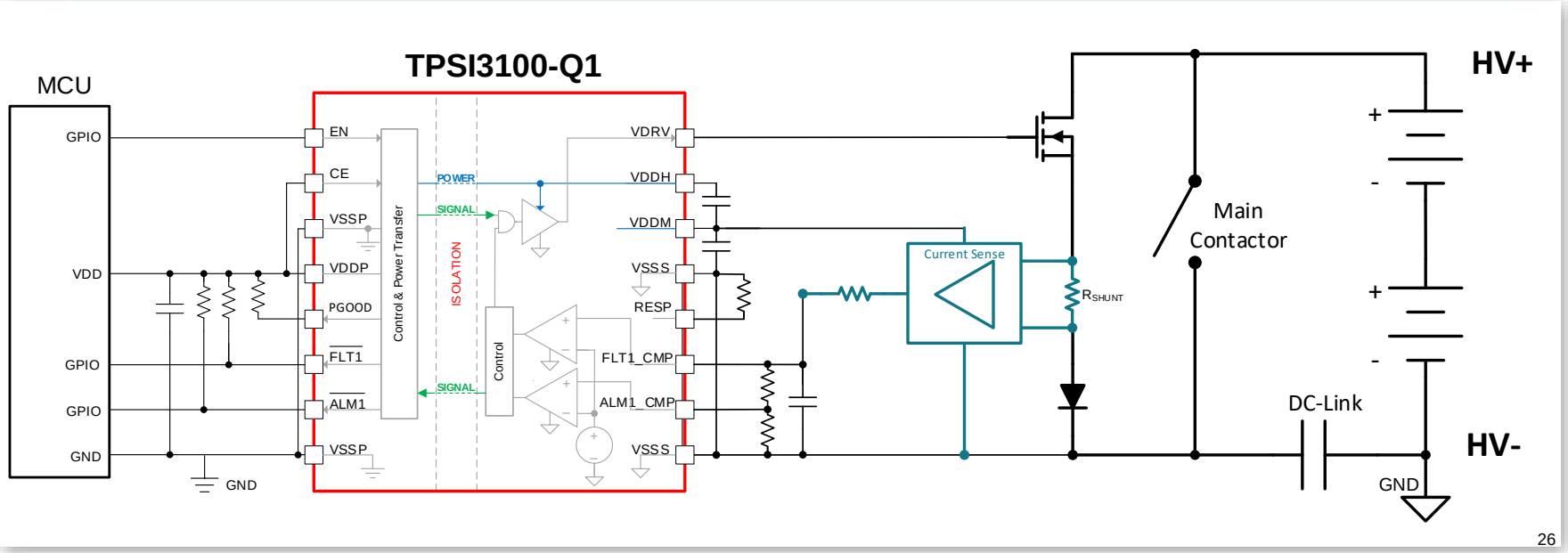

Insulation monitoring: High-voltage testing

Insulation monitoring devices must pass a high voltage test up to 4.3 kV in the OFF state

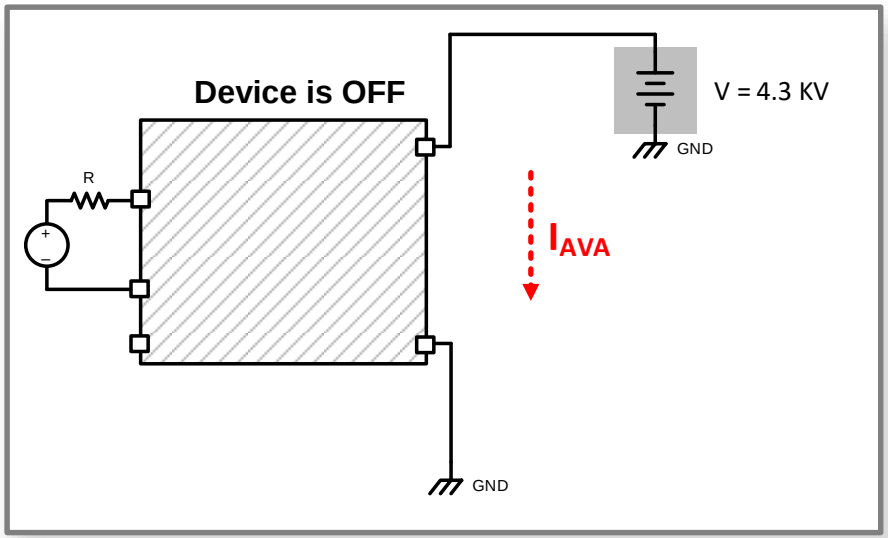

To verify reliability, a high voltage is applied to the device while OFF. This test is called a *Withstand Voltage Test* or a *High Potential Test*.

These high voltages can cause **avalanche current (I_{AVA})** to flow through, even though the device is OFF.

Texas Instruments

Isolated switch: Optimized insulation monitoring

The TPSI2140-Q1 is a solid state relay that delivers cost savings and improved measurement accuracy with its 1mA-2mA avalanche rating and robust capacitive isolation barrier.

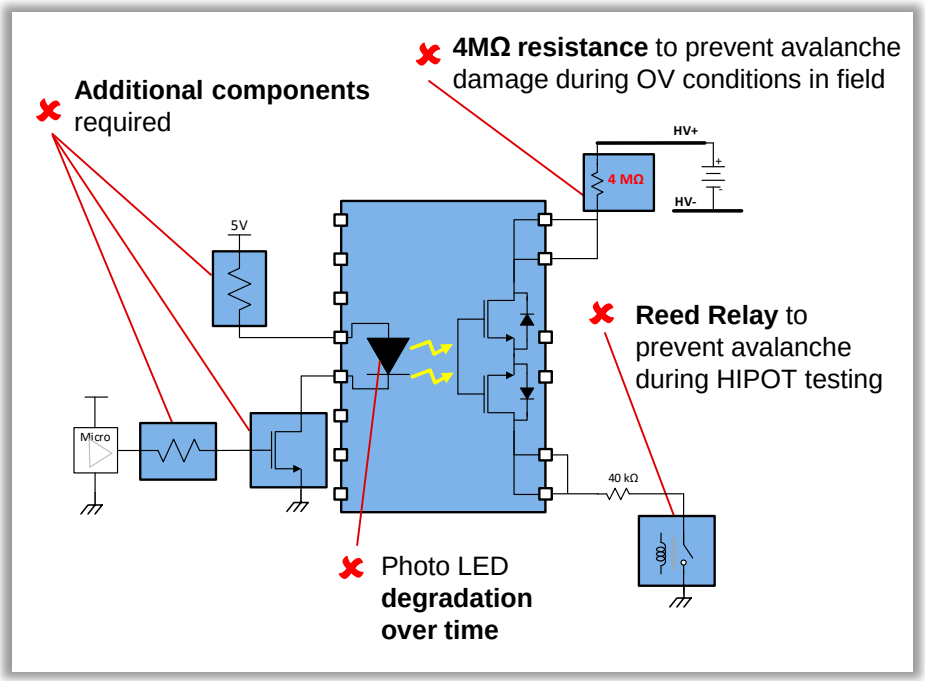

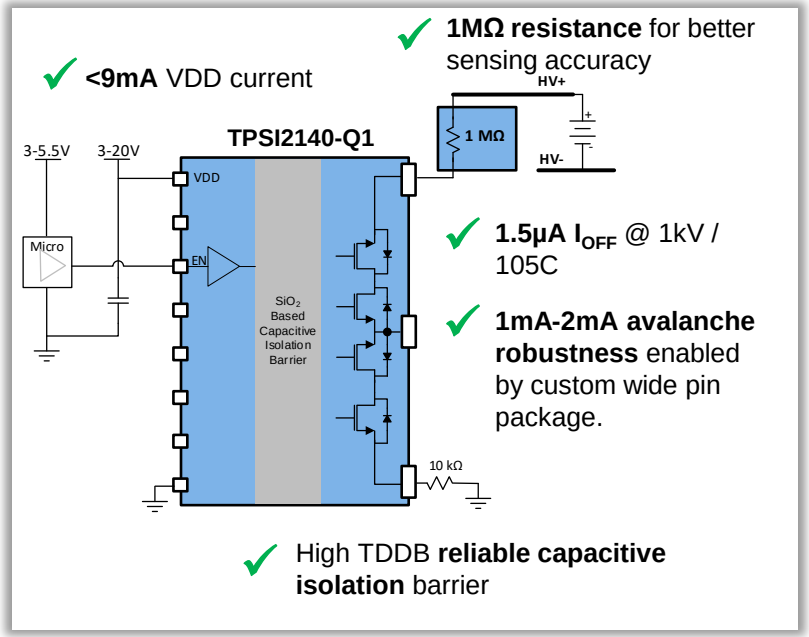

Texas Instruments

Multi-relay replacement in 400V BMS systems

- TPSI2072-Q1 integrates the function of two 600V opto-relays into a single package.
- Additionally, it can withstand up to 2mA of avalanche current, replacing external mechanical switches.

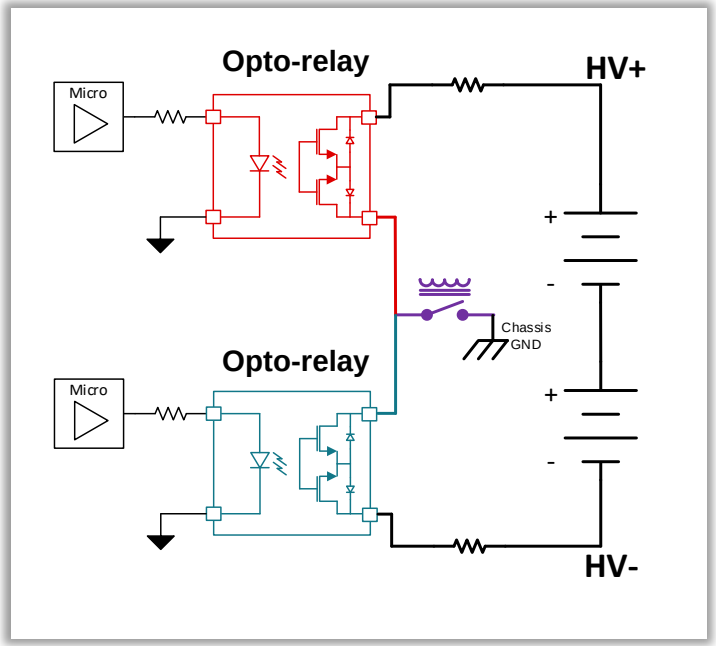

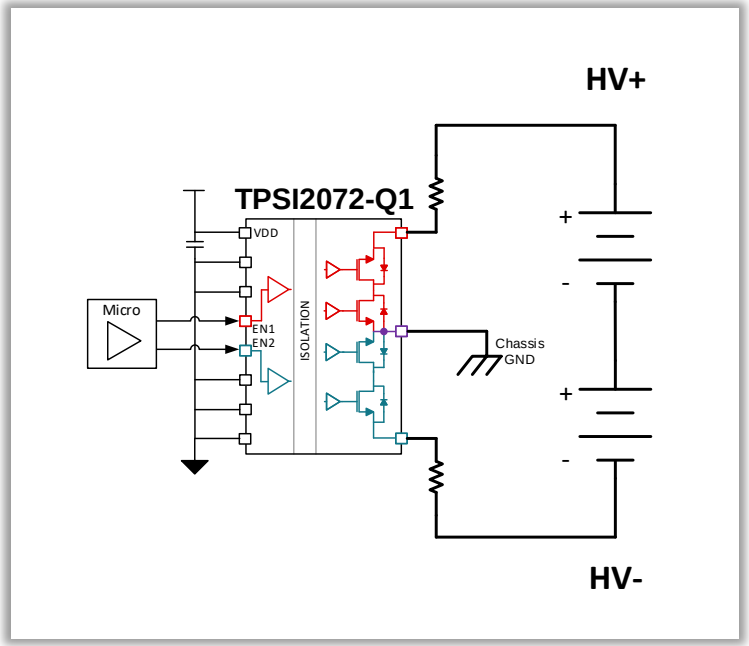

Texas Instruments

Isolated switches and switch drivers in BMS applications

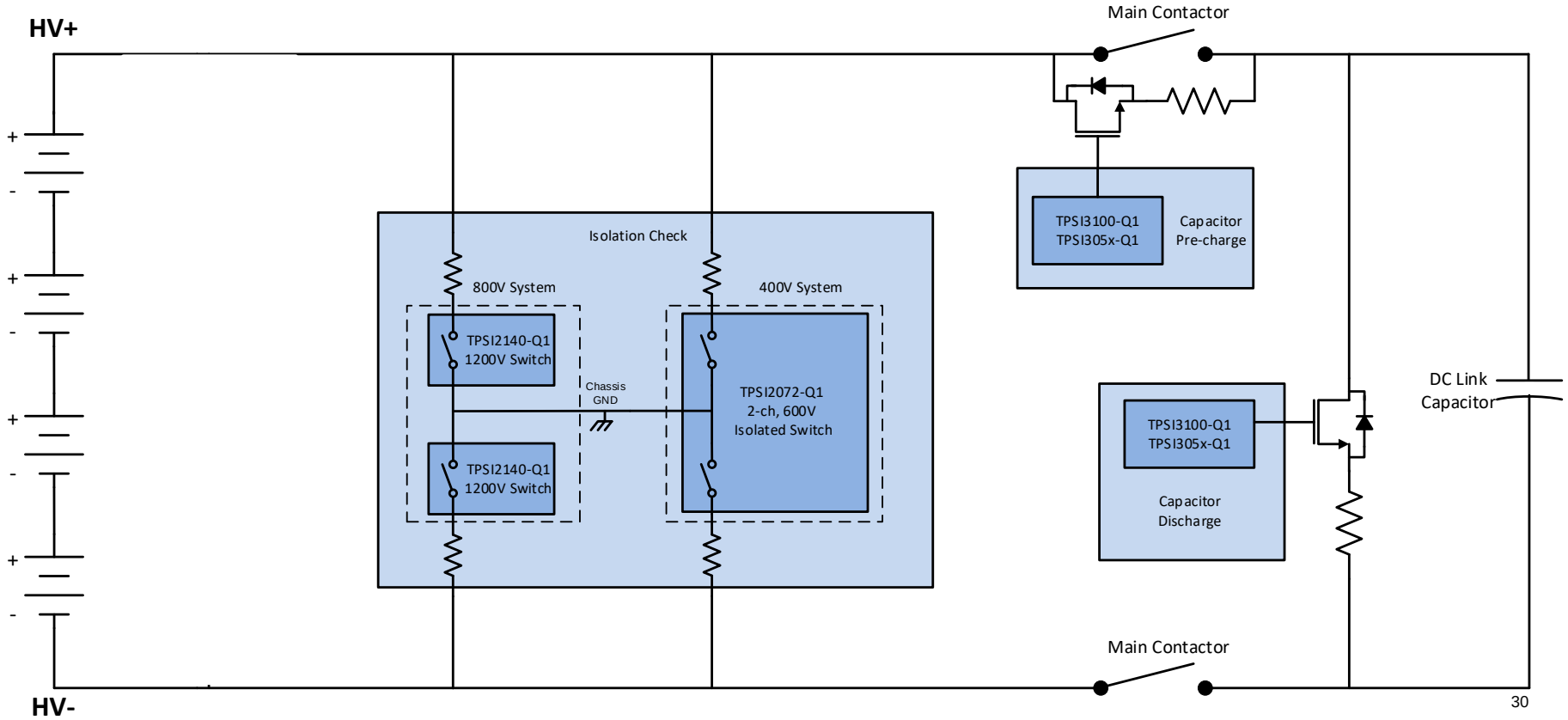

TI's SSR benefits over EMRs and photo relays

Higher system reliability & best-in-class isolation

- Improves system lifetime with basic isolation up to 3.75 kV_{RMS} and reinforced isolation up to 5 kV_{RMS} by eliminating wear & tear of EMRs and LED degradation of photo relays.

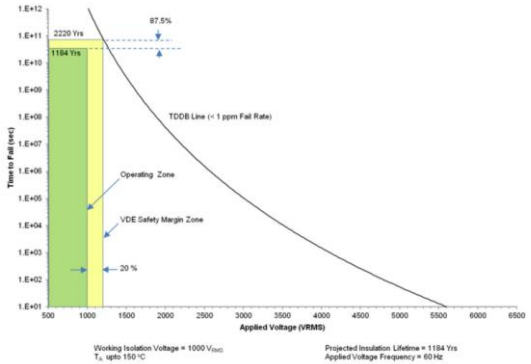

TPSI3050-Q1 Insulation Lifetime Projection Data

Integrated power & signal isolation

- Reduces solution size and cost by integrating the power and signal transfer over an isolation barrier in a single chip.
- Ability to provide an auxiliary power source on the secondary side allows for low-voltage systems, such as current sense amplifiers, to be powered without requiring any external power source on the secondary side of the device.

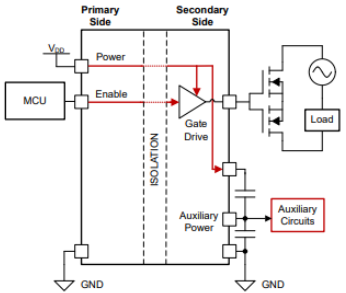

Smarter switches with back channel communication

- Ability to send signal and power from primary to secondary side, as well as send diagnostics like fault and alarm signals from secondary to primary side.
- These diagnostic features can be used to detect system faults like over current or monitor system conditions like in-rush currents.

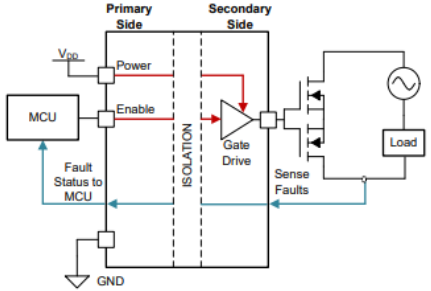

EMI optimization

- Transferring power over a capacitive or inductive isolation barrier results in higher EMI than optical relays and EMRs
- Newer devices are designed to help minimize conducted and radiated emissions with spread spectrum techniques, symmetric drive, optimized switching frequency etc.
- Additional system level techniques (Y-cap, stitching cap, ferrite beads) can be used to improve EMI performance further to meet automotive standards (CISPR 25 Class 5) or industrial standards (CISPR 32)

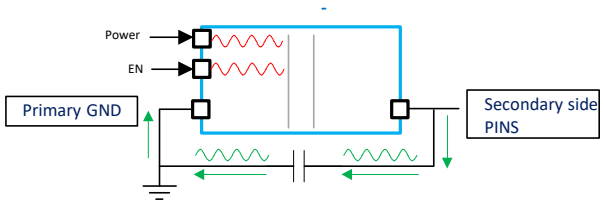

Surface mounted Y-capacitor

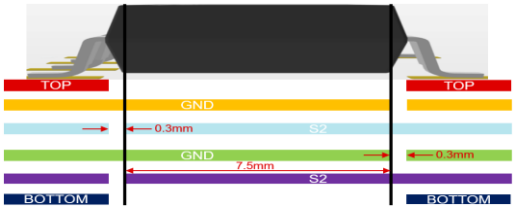

Integrated PCB stitching capacitor

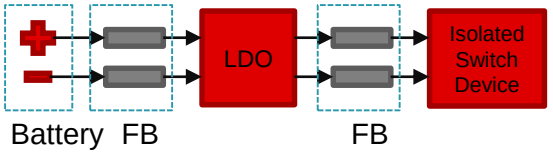

Ferrite beads

Texas Instruments

Getting started with isolated switches and drivers

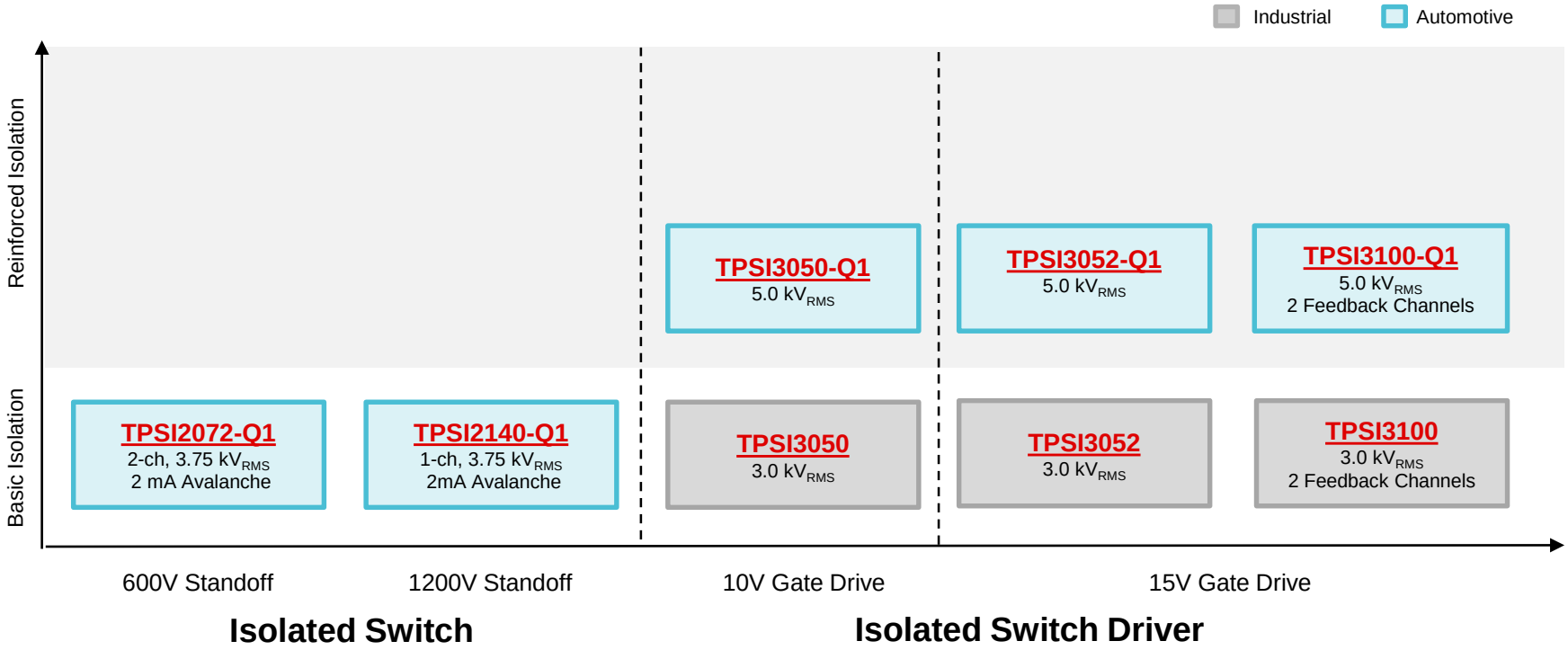

Texas Instruments

Getting started with isolated switches and drivers

Technical Collateral
Basics of Solid-State Relays
How solid-state relays simplify insulation monitoring designs in high-voltage applications
How to Achieve Higher-reliability Isolation and a Smaller Solution Size with Solid-state Relays
Why Pre-Charge Circuits are Necessary in High-Voltage Systems
How to Design High-voltage Systems with Higher Reliability While Reducing Solution Size and Cost
Designing Safer, Smarter and More Connected Battery Management Systems
When to use SSR or Isolated Gate Driver

Reference Designs
TIDA-050063: High-voltage solid-state relay active precharge reference design
TIDA-050059: Overcurrent and overtemperature protection for solid-state relays reference design
TIDA-050058: Zero-cross switching for solid-state relays reference design
TIDA-010232: AFE for insulation monitoring in high-voltage EV charging and solar energy reference design
TIDA-01513:Automotive High-Voltage and Isolation Leakage Measurements Reference Design

Evaluation boards
TPSI3050Q1EVM — TPSI3050-Q1 evaluation module for automotive load switch driver with reinforced isolation
TPSI3052Q1EVM — TPSI3052-Q1 evaluation module with reinforced isolation and 15-V gate drive
TPSI31XXQ1EVM — TPSI31xx-Q1 evaluation module
TPSI2140Q1EVM — TPSI2140-Q1 evaluation module for 1200-V 50-mA isolated switch with 2-mA avalanche rating
TPSI2072Q1EVM — TPSI2072-Q1 evaluation module for two-channel 600-V isolated switch

Calculation Tools
ACTIVE-PRECHARGE-CALC — Active precharge reference design (TIDA-050063) calculator tool
SLVRBI9 — TPSI3050-Q1, TPSI3052-Q1, TPSI3050, TPSI3052 Design Calculator

© Copyright 2024 Texas Instruments Incorporated. All rights reserved.

This material is provided strictly “as-is,” for informational purposes only, and without any warranty.
Use of this material is subject to TI’s **Terms of Use**, viewable at TI.com

IMPORTANT NOTICE AND DISCLAIMER

TI PROVIDES TECHNICAL AND RELIABILITY DATA (INCLUDING DATA SHEETS), DESIGN RESOURCES (INCLUDING REFERENCE DESIGNS), APPLICATION OR OTHER DESIGN ADVICE, WEB TOOLS, SAFETY INFORMATION, AND OTHER RESOURCES “AS IS” AND WITH ALL FAULTS, AND DISCLAIMS ALL WARRANTIES, EXPRESS AND IMPLIED, INCLUDING WITHOUT LIMITATION ANY IMPLIED WARRANTIES OF MERCHANTABILITY, FITNESS FOR A PARTICULAR PURPOSE OR NON-INFRINGEMENT OF THIRD PARTY INTELLECTUAL PROPERTY RIGHTS.

These resources are intended for skilled developers designing with TI products. You are solely responsible for (1) selecting the appropriate TI products for your application, (2) designing, validating and testing your application, and (3) ensuring your application meets applicable standards, and any other safety, security, regulatory or other requirements.

These resources are subject to change without notice. TI grants you permission to use these resources only for development of an application that uses the TI products described in the resource. Other reproduction and display of these resources is prohibited. No license is granted to any other TI intellectual property right or to any third party intellectual property right. TI disclaims responsibility for, and you will fully indemnify TI and its representatives against, any claims, damages, costs, losses, and liabilities arising out of your use of these resources.

TI’s products are provided subject to TI’s Terms of Sale or other applicable terms available either on ti.com or provided in conjunction with such TI products. TI’s provision of these resources does not expand or otherwise alter TI’s applicable warranties or warranty disclaimers for TI products.

TI objects to and rejects any additional or different terms you may have proposed.

Mailing Address: Texas Instruments, Post Office Box 655303, Dallas, Texas 75265
Copyright © 2024, Texas Instruments Incorporated