AM273x Technical Reference Manual

Technical Reference Manual

Literature Number: SPRUIU0E
JANUARY 2022 – REVISED APRIL 2025

Table of Contents

1 Read This First 9
1.1 About This Manual 9
1.2 Glossary 9
1.3 Related Documentation 9
1.4 Support Resources 9
2 Introduction 10
2.1 Device Overview 10
2.2 Device Block Diagram 12
3 Memory Map 13
3.1 Main Subsystem Cortex R5F Memory Map 13
3.2 DSP Subsystem C66x Memory Map 18
3.3 Radar Control Subsystem Memory Map 23
4 System Interconnect 28
4.1 Main Subsystem R5F Infrastructure 28
4.2 DSP Subsystem C66x Infrastructure 30
4.3 Radar Control Subsystem Infrastructure 31
5 Device Initialization 33
5.2 Boot Process 33
5.2.1 ROM Code Overview 33
5.2.2 Boot Modes 33
5.2.3 SOP Mode Pins 34
5.2.4 BOOT-ROM Architecture (RBL) 34
5.2.5 R5F SBL Loading 35
6 Device Configuration 37
6.1 Overview 37
6.2 Control Registers 37
6.2.1 Kick Protection Registers 37
6.2.2 TOP_RCM Registers 39
6.2.3 MSS_RCM Registers 194
6.2.4 DSS_RCM Registers 355
6.2.5 RCSS_RCM Registers 494
6.2.6 DSS_CTRL Registers 595
6.2.7 MSS_CTRL_memory_map Registers 822
6.2.8 RCSS_CTRL_memory_map Registers 1082
6.2.9 MSS_IOMUX Registers 1181
6.3 Device Clock Architecture 1275
6.3.1 Clock Overview 1275
6.3.2 External Clocks 1277
6.3.3 Clock Selection 1279
6.3.4 Analog Modules 1290
6.4 Power Domains 1293
6.4.1 DSP Power Domain 1293
6.4.2 DSP Subsystem L3 Power Domain 1294
6.5 Resets 1295
7 Processors and Accelerators 1297
7.1 Main Subsystem Cortex R5F 1297
7.1.1 Main ARM SubSystem Features 1297
7.1.2 TCM Initialization 1298
7.1.3 TCM ROM-RAM SWAP 1298

Copyright © 2025 Texas Instruments Incorporated

7.1.4 Lock-Step to Dual Core Switching....1300
7.1.5 Vectored Interrupt Manager (VIM) Module....1300
7.1.6 Resets....1351
7.2 TI C66x DSP Subsystem (DSS)Overview....1352
7.2.1 C66x DSP Subsystem....1353
7.2.2 DSP Subsystem Integration....1359
7.3 Radar Processing Hardware Accelerator....1362
7.3.1 Radar Accelerator Features Overview....1362
7.3.2 Radar Accelerator Architecture....1363
7.4 Radar Hardware Accelerator 2.0....1363
7.4.1 Radar Hardware Accelerator – Overview....1364
7.4.2 Accelerator Engine – State Machine....1371
7.4.3 Accelerator Engine – Input Formatter....1378
7.4.4 Accelerator Engine – Output Formatter....1387
7.4.5 Accelerator Engine – Core Computational Unit....1393
7.4.6 Parameter Set Layouts....1404
7.4.7 FFT Engine – Pre-Processing....1407
7.4.8 Core Computational Unit - CFAR Engine....1426
7.4.9 Core Computational Unit – Statistics....1439
7.4.10 Core Computational Unit – Local Maxima Engine....1449
7.4.11 Context Switching....1456
7.4.12 Compression Engine....1460
7.4.13 Radar Hardware Accelerator Registers....1460
8 Interprocessor Communication....1720
8.1 Mailbox....1720
8.1.1 Maibox Message Scheme....1721
9 Interrupts....1723
9.1 Main Subsystem Cortex R5F Interrupt Map....1723
9.2 DSP Subsystem C66x Interrupt Map....1728
9.3 DSP Subsystem Cortex M4 Interrupt Map....1730
9.4 Main Subsystem ESM Interrupt Map....1732
9.5 DSP Subsystem ESM Interrupt Map....1740
10 Data Movement Architecture....1749
10.1 Enhanced Direct Memory Access (EDMA)....1749
10.1.1 EDMA Module Overview....1750
10.1.2 EDMA Integration....1753
10.1.3 EDMA Controller Functional Description....1759
10.1.4 EDMA Transfer Examples....1808
10.1.5 EDMA Event Map....1814
10.1.6 EDMA Debug Checklist and Programming Tips....1822
10.1.7 EDMA Registers....1824
11 Peripherals....2065
11.1 General Connectivity Peripherals....2065
11.1.1 General-Purpose Input/Output (GIO) Module....2065
11.1.2 Inter-Integrated Circuit (I2C) Module....2160
11.1.3 UART/SCI....2205
11.1.4 Multi-Buffered Serial Peripheral Interface Module (MibSPI) with Parallel Pin Option (MibSPIP)....2284
11.1.5 GPADC....2410
11.2 High-speed Serial Interfaces....2450
11.2.1 Ethernet SubSystem (MCU_CPSW0)....2450
11.2.2 LVDS....3003
11.2.3 MDO/Aurora....3152
11.3 Memory Interfaces....3327
11.3.1 Quad Serial Peripheral Interface (QSPI)....3328
11.4 Industrial and Control Interfaces....3351
11.4.1 Enhanced Capture (eCAP) Module....3351
11.4.2 Enhanced Pulse Width Modulator (ePWM) Module....3386
11.4.3 CANFD....3516
11.5 Audio Interfaces....3659
11.5.1 Multichannel Audio Serial Port (McASP)....3659
11.6 Camera Subsystem....3780

Copyright © 2025 Texas Instruments Incorporated

11.6.1 CSI2-RX....3780
11.7 Timer Modules....3971
11.7.1 Real-Time Interrupt (RTI) and Watchdog Module....3971
11.8 Internal Diagnostics Modules....4024
11.8.1 Data Modification Module (DMM)....4024
11.8.2 Core Clock Comparator (CCC)....4077
11.8.3 Dual Clock Comparator (DCC)....4079
11.8.4 ECC_AGGREGATOR....4099
11.8.5 ECC Registers....4106
11.8.6 Error Signaling Module (ESM)....4216
11.8.7 Cyclic Redudancy Check (CRC)....4266
11.8.8 Safety Modules....4350
12 On-chip Debug....4698
12.1 AM273x On Chip Debug Architecture....4699
12.1.1 On Chip DebugOverview....4699
12.1.3 On Chip Debug Subsystem Address Map....4700
12.1.4 Trace Subsystem....4701
12.1.5 Suspend Peripherals....4704
13 Revision History....4706

Copyright © 2025 Texas Instruments Incorporated

This page intentionally left blank.

Copyright © 2025 Texas Instruments Incorporated

Trademarks

TI E2E™ is a trademark of Texas Instruments.
All trademarks are the property of their respective owners.

Copyright © 2025 Texas Instruments Incorporated

This page intentionally left blank.

Copyright © 2025 Texas Instruments Incorporated

Chapter 1

Read This First

1.1 About This Manual

This Technical Reference Manual (TRM) details the integration, the environment, the functional description, and the programming models for each peripheral and subsystem in the device.

1.2 Glossary

TI Glossary	This glossary lists and explains terms, acronyms, and definitions.

Trademarks

TI E2E™ is a trademark of Texas Instruments.
All trademarks are the property of their respective owners.

1.3 Related Documentation

AM273x Documentation

- AM273x Data sheet
- AM273x Errata
- AM273x Hardware Design Guide

AM273x Software

- MCU-PLUS-SDK-AM273X
- AM27x Academy

Additional Documentation on C66x

- C66x Reference Guide
- C66x User Guide
- Optimizing Loops on the C66x DSP
- TMS320C6000 Optimizing Compiler User Guide
- C66x Cache User Guide

1.4 Support Resources

TI E2E™ support forums are an engineer's go-to source for fast, verified answers and design help — straight from the experts. Search existing answers or ask your own question to get the quick design help you need.

Linked content is provided "AS IS" by the respective contributors. They do not constitute TI specifications and do not necessarily reflect TI's views; see TI's Terms of Use.

Copyright © 2025 Texas Instruments Incorporated

Chapter 2
Introduction

This chapter introduces the features, subsystems, and architecture of AM273x (TI Processor for Radar) Systems on Chip (SoCs).

2.1 Device Overview

The AM273x is targeted for automotive applications such as Advanced Driver Assistance System (ADAS), automotive premium audio and amplifiers, industrial and broad-market applications such as edge analytics, low-end motor drives, entry-level industrial communication gateways, and audio applications.

The device is composed of the following main subsystems:

- One Dual Core Lock-step Cortex R5F microcontroller at up to 400 MHz.
- One TI C66x variant Single Core Floating point DSP at up to 550 MHz
- Radar Hardware Accelerators running at 400 MHz
- Cortex M4-based () Hardware Security Module (HSM) for running security services in a secure island.

The device provides a rich set of peripherals, such as:

- General connectivity peripherals, including:
  - Three Inter-Integrated Circuit (I2C) interfaces
  - Four Controller/Peripheral Multi-Buffered Serial Peripheral Interfaces (MiBSPI)
  - configurable Universal Asynchronous Receiver/Transmitter (UART) interfaces
  - One General-Purpose Input/Output (GPIO) module
  - One 10-bit Analog to Digital Convertors.
- High-speed interfaces, including:
  - Two 4-Lane CSI2 receiver interface
  - One Ethernet switch (CPSW)
- Control and Communication interfaces, including:
  -
  - Three Enhanced Pulse Width Modulation (EPWM) modules
  - One Enhanced Capture (ECAP) module.
- EMIF Interface
  - One Quad-Serial Peripheral Interface (QSPI) at up to 67 MHz.
- Timers and Watchdog Module
- Interprocesser Communication (IPC) interface
  - Mailbox module for interprocessor communication between the different modules
- Sub-system Reset and control module with device top-level configurations:
  - Power distribution, reset controls, and clock management components.
  - Registers for the following functions:
    - I/O Configurations
    - PLL control and associated High-speed Dividers (HSDIV)

Copyright © 2025 Texas Instruments Incorporated

    - Clock Selection
    - System boot mode decoding logic
  - Up to 5 MB of on-chip memory split across DSS, MSS, and the shared memory L3 bank.
  - Debug and trace capabilities.

The AM273x device has distinguished characteristics for ADAS applications:

- High Performance Radar Processing Accelerators with the capability to offload the DSP/CPU almost all the pre-processing functions.
- Radar Hardware Accelerators running at 400 MHz capable of the 256 pt FFT for 4Rx channels in 3.2 µs.
- High Performance/Cost ratio. Highly optimized, area efficient infrastructure to support the radar data flow with maximum cost effectiveness and efficiency.
- One 4-Lane LVDS TX interface with Xilinx AURORA protocol.

The device includes different modules for functional safety requirements support:

- Logic BIST mechanism for all the CPU cores
- PBIST mechanism for all the memories
- ECC on the critical memories
- MPU on all critical shared resources – MMRs and memories
- Voltage monitor on all the primary supplies with >90% DC
- Clock monitors to monitor all the primary clocks. At least one Watchdog per each subsystem.
- PLL Lock monitors – PHASELOCK, FREQLOCK
- Temperature sensors with an accuracy of +/-5°C near DSP, R5F, HSM, and all other temperature sensitive locations.
- Separate safety island (MCU) with Lock-Step Cortex-R5F.
- Safety enabled interconnect
- Two Error Signaling Modules (ESM) to enable error monitoring, 1 each in DSS and MSS.
- Temperature monitoring sensors
- Dedicated hardware Memory Cyclic Redundancy Check (MCRC) blocks.

Copyright © 2025 Texas Instruments Incorporated

2.2 Device Block Diagram

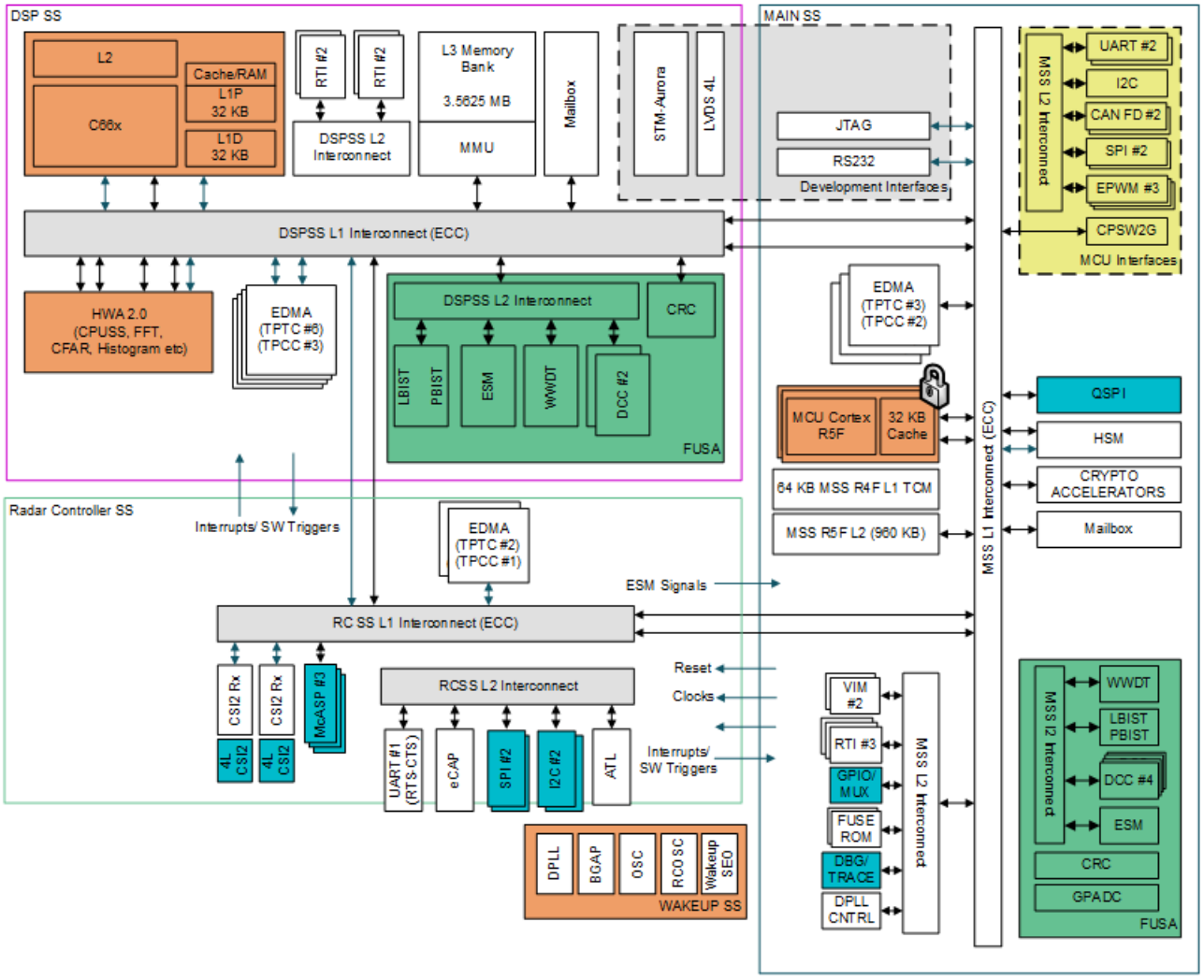

Figure 2-1. Block Diagram

Copyright © 2025 Texas Instruments Incorporated

The following tables explain the memory maps.

Table 3-1. R5 Memory Map Overview

Region	Size	Notes
R5 L1 I-Cache	32 KB	L1 stands for Level 1
R5 L1 D-Cache	32 KB	D-Cache stands for Data Cache
R5 L1 TCMA ROM	128 KB	
R5 L1 TCMA RAM Lock Step Mode	32 KB	Applicable for Core A only
R5 L1 TCMA RAM Dual Core Mode	16 KB for Core A and 16 KB for Core B	
R5 L1 TCMB RAM Lock Step Mode	32 KB	Applicable for Core A Only
R5 L1 TCMB RAM Dual Core Mode	16 KB for Core A and 16 KB for Core B	

Note

There are no fundamental restrictions on access to MSS and DSS memories. The address regions (global view) must be selected appropriately. There are Memory Protection Units (MPUs) at the key memories (MSS L2, DSS L3, etc...). This allows the user application to restrict access as needed.

Table 3-2. MSS L2 Memory Map Overview

Region	Size	Notes
L2 RAM	960 KB	Also known as L2 Memory and MSS_L2

Table 3-3. DSP L1 Memory Map Overview

Region	Size	Notes
DSP L1P	32 KB	L1P stands for L1 Program
DSP L1D	32 KB	L1D stands for L1 Data

Table 3-4. DSS Memory Map Overview

Region	Size	Notes
DSS L2 RAM	384 KB	
DSS L3 Memory	1.5 - 3.5625 MB	Size depends device's memory grade. See data sheet's Device Speed and Memory Grade for details.

Note

L3 consists of banks. The below tables show example sizes and addresses. However, the banks are for PBIST and have different ways to map.

3.1 Main Subsystem Cortex R5F Memory Map

Module Name	Base Address	End Address	Size
TCMA_ROM_CR5A	0x0000 0000	0x0001 FFFC	128 KBytes

Copyright © 2025 Texas Instruments Incorporated

Module Name	Base Address	End Address	Size
TCMA_RAM_CR5A (Lock Step)	0x0002 0000	0x0002 7FFC	32 KBytes
TCMA_RAM_CR5A (Dual Core)	0x0002 0000	0x0002 3FFC	16 KBytes
TCMB_RAM_CR5A (Lock Step)	0x0008 0000	0x0008 7FFC	32 KBytes
TCMB_RAM_CR5A (Dual Core)	0x0008 0000	0x0008 3FFC	16 KBytes
MSS_SPIA_RAM	0x0200 0000	0x0200 00FC	256 Bytes
MSS_SPIB_RAM	0x0202 0000	0x0202 00FC	256 Bytes
MSS_MCANA_MSG_RAM	0x0204 0000	0x0205 0FFC	68 KBytes
MSS_VIM_R5A	0x0208 0000	0x0208 23FC	9 KBytes
MSS_VIM_R5B	0x020A 0000	0x020A 23FC	9 KBytes
MSS_IOMUX	0x020C 0000	0x020C 01FC	512 Bytes
MSS_RCM	0x0210 0000	0x0210 0FFC	4 KBytes
MSS_CTRL	0x0212 0000	0x0212 0FFC	4 KBytes
MSS_TOPRCM	0x0214 0000	0x0214 0FFC	4 KBytes
MSS_DEBUGSS	0x02A0 0000	0x02A3 DFFC	248 KBytes
MSS_PCR1	0x02F7 8000	0x02F7 83FC	1 KBytes
TOP_PBIST	0x02F7 9400	0x02F7 95CC	464 Bytes
MSS_R5SS_STC	0x02F7 9800	0x02F7 9918	284 Bytes
MSS_DCCA	0x02F7 9C00	0x02F7 9C28	44 Bytes
MSS_DCCB	0x02F7 9D00	0x02F7 9D28	44 Bytes
MSS_DCCC	0x02F7 9E00	0x02F7 9E28	44 Bytes
MSS_DCCD	0x02F7 9F00	0x02F7 9F28	44 Bytes
MSS_RTIA	0x02F7 A000	0x02F7 A0BC	192 Bytes
MSS_RTIB	0x02F7 A100	0x02F7 A1BC	192 Bytes
MSS_RTIC	0x02F7 A200	0x02F7 A2BC	192 Bytes
MSS_WDT	0x02F7 A300	0x02F7 A3BC	192 Bytes
MSS_ESM	0x02F7 A400	0x02F7 A4DC	224 Bytes
TOP_EFUSE_FARM	0x02F7 A800	0x02F7 A83C	64 Bytes
MSS_CCMR	0x02F7 AC00	0x02F7 AC18	28 Bytes
MSS_I2C	0x02F7 B000	0x02F7 B060	100 Bytes
MSS_GIO	0x02F7 B400	0x02F7 B551	341 Bytes
MSS_ECC_AGG_R5A	0x02F7 B800	0x02F7 BA0C	528 Bytes
MSS_ECC_AGG_R5B	0x02F7 BC00	0x02F7 BE0C	528 Bytes
MSS_ECC_AGG_MSS	0x02F7 C000	0x02F7 C20C	528 Bytes
MSS_SPIA	0x02F7 E800	0x02F7 E9FC	512 Bytes
MSS_SPIB	0x02F7 EA00	0x02F7 EBFC	512 Bytes
MSS_SCIA	0x02F7 EC00	0x02F7 EC90	148 Bytes
MSS_SCIB	0x02F7 ED00	0x02F7 ED90	148 Bytes
MSS_MCANA_ECC	0x02F7 F800	0x02F7 FA0C	528 Bytes
MSS_MCANA_CFG	0x02F7 FC00	0x02F7 FEFC	768 Bytes
MSS_MCANB_MSG_RAM	0x0304 0000	0x0305 0FFC	68 KBytes
TOP_AURORA_TX	0x0306 0000	0x0306 0FFC	4 KBytes
TOP_MDO_INFRA	0x0308 0000	0x0308 0FFC	4 KBytes
MSS_GPADC_PKT_RAM	0x030C 0000	0x030C 07FC	2 KBytes
TOP_CTRL	0x030E 0000	0x030E 0FFC	4 KBytes
MSS_TPCC_A	0x0310 0000	0x0310 3FFC	16 KBytes
MSS_TPCC_B	0x0312 0000	0x0312 3FFC	16 KBytes

Copyright © 2025 Texas Instruments Incorporated

Module Name	Base Address	End Address	Size
MSS_TPTC_A0	0x0314 0000	0x0314 0358	860 Bytes
MSS_TPTC_A1	0x0316 0000	0x0316 0358	860 Bytes
MSS_TPTC_B0	0x0318 0000	0x0318 0358	860 Bytes
MSS_PCR2	0x03F7 8000	0x03F7 83FC	1 KBytes
MSS_ETPWMA	0x03F7 8C00	0x03F7 8C70	116 Bytes
MSS_ETPWMB	0x03F7 8D00	0x03F7 8D70	116 Bytes
MSS_ETPWMC	0x03F7 8E00	0x03F7 8E70	116 Bytes
MSS_GPADC_REG	0x03F7 9800	0x03F7 9858	92 Bytes
MSS_DMM_A	0x03F7 9C00	0x03F7 9C8C	144 Bytes
MSS_DMM_B	0x03F7 9E00	0x03F7 9E8C	144 Bytes
MSS_MCANB_ECC	0x03F7 F800	0x03F7 FA0C	528 Bytes
MSS_MCANB_CFG	0x03F7 FC00	0x03F7 FEFC	768 Bytes
RCSS_RCM	0x0500 0000	0x0500 0FFC	4 KBytes
RCSS_CTRL	0x0502 0000	0x0502 0FFC	4 KBytes
RCSS_SPIA_RAM	0x0504 0000	0x0504 00FC	256 Bytes
RCSS_SPIB_RAM	0x0506 0000	0x0506 00FC	256 Bytes
RCSS_CSI2A	0x0508 0000	0x0508 0184	392Bytes
RCSS_CSI2B	0x050A 0000	0x050A 0184	392 Bytes
RCSS_SCI_A	0x050C 0000	0x050C 0FFC	4 KBytes
RCSS_TPCC_A	0x0510 0000	0x0510 3FFC	16 KBytes
RCSS_TPTC_A0	0x0516 0000	0x0516 0358	860 Bytes
RCSS_TPTC_A1	0x0518 0000	0x0518 0358	860 Bytes
RCSS_MCASP_A	0x051E 0000	0x051E 0FFC	4 KBytes
RCSS_MCASP_B	0x0520 0000	0x0520 0FFC	4 KBytes
RCSS_MCASP_C	0x0522 0000	0x0522 0FFC	4 KBytes
RCSS_ATL	0x0524 0000	0x0524 039C	928 Bytes
RCSS_PCR	0x05F7 8000	0x05F7 83FC	1 KBytes
RCSS_ECAP	0x05F7 9C00	0x05F7 9C3C	64 Bytes
RCSS_GIO	0x05F7 B400	0x05F7 B551	341 Bytes
RCSS_SPIA	0x05F7 E800	0x05F7 E9FC	512 Bytes
RCSS_SPIB	0x05F7 EA00	0x05F7 EBFC	512 Bytes
RCSS_I2CA	0x05F7 EC00	0x05F7 EC60	100 Bytes
RCSS_I2CB	0x05F7 F000	0x05F7 F060	100 Bytes
DSS_RCM	0x0600 0000	0x0600 0FFC	4 KBytes
DSS_CTRL	0x0602 0000	0x0602 0FFC	4 KBytes
DSS_CBUFF	0x0604 0000	0x0604 0230	564 Bytes
DSS_HWA_PARAM	0x0606 0000	0x0606 0FFC	4 KBytes
DSS_HWA_CFG	0x0606 2000	0x0606 2FFC	4 KBytes
DSS_HWA_WINDOW_RAM	0x0606 4000	0x0606 5FFC	8 KBytes
DSS_HWA_MULT_RAM	0x0606 8000	0x0606 9FFC	8 KBytes
DSS_HWA_DEROT_RAM	0x0606 C000	0x0606 C0FC	256 Bytes
DSS_HWA_SHUFFLE_RAM	0x0606 E000	0x0606 E1FC	512 Bytes
DSS_HWA_2DSTAT_ITER_VAL_RAM	0x0608 0000	0x0608 0FFC	4 KBytes
DSS_HWA_2DSTAT_ITER_IDX_RAM	0x0608 2000	0x0608 27FC	2 KBytes

Copyright © 2025 Texas Instruments Incorporated

Module Name	Base Address	End Address	Size
DSS_HWA_2DSTAT_SMPL_VAL_RAM	0x0608 4000	0x0608 43FC	1 KBytes
DSS_HWA_2DSTAT_SMPL_IDX_RAM	0x0608 6000	0x0608 61FC	512 Bytes
DSS_HWA_HIST_RAM	0x0608 8000	0x0608 9FFC	8 KBytes
DSS_HWA_HIST_THRESH_RAM	0x0608 C000	0x0608 C0FC	256 Bytes
DSS_ECC_AGG	0x060A 0000	0x060A 020C	528 Bytes
DSS_TPCC_A	0x0610 0000	0x0610 3FFC	16 KBytes
DSS_TPCC_B	0x0612 0000	0x0612 3FFC	16 KBytes
DSS_TPCC_C	0x0614 0000	0x0614 3FFC	16 KBytes
DSS_TPTC_A0	0x0616 0000	0x0616 0358	860 Bytes
DSS_TPTC_A1	0x0618 0000	0x0618 0358	860 Bytes
DSS_TPTC_B0	0x061A 0000	0x061A 0358	860 Bytes
DSS_TPTC_B1	0x061C 0000	0x061C 035	860 Bytes
DSS_TPTC_C0	0x061E 0000	0x061E 0358	860 Bytes
DSS_TPTC_C1	0x0620 0000	0x0620 0358	860 Bytes
DSS_TPTC_C2	0x0622 0000	0x0622 0358	860 Bytes
DSS_TPTC_C3	0x0624 0000	0x0624 0358	860 Bytes
DSS_TPTC_C4	0x0626 0000	0x0626 0358	860 Bytes
DSS_TPTC_C5	0x0628 0000	0x0628 0358	860 Bytes
DSS_PCR	0x06F7 8000	0x06F7 83FC	1 KBytes
DSS_DSP_PBIST	0x06F7 9000	0x06F7 91CC	464 Bytes
DSS_DSP_STC	0x06F7 9200	0x06F7 9318	284 Bytes
DSS_CM4_STC	0x06F7 9400	0x06F7 9518	284 Bytes
DSS_DCCA	0x06F7 9C00	0x06F7 9C28	44 Bytes
DSS_DCCB	0x06F7 9D00	0x06F7 9D28	44 Bytes
DSS_RTIA	0x06F7 A000	0x06F7 A0BC	192 Bytes
DSS_RTIB	0x06F7 A100	0x06F7 A1BC	192 Bytes
DSS_WDT	0x06F7 A200	0x06F7 A2BC	192 Bytes
DSS_SCIA	0x06F7 B000	0x06F7 B090	148 Bytes
DSS_CMC_CFG	0x06F7 C000	0x06F7 C030	52 Bytes
DSS_ESM	0x06F7 D000	0x06F7 D0DC	224 Bytes
MSS_CPSW	0x0700 0000	0x0703 EFFC	252 KBytes
MSS_L2	0x1020 0000	0x102E FFFC	960 KBytes
HSM_ROM	0x2000 0000	0x2000 FFFC	64 KBytes
HSM_RAM	0x2002 0000	0x2004 FFFC	192 KBytes
DSS_CM4_RAM	0x2800 0000	0x2800 FFFC	64 KBytes
HSM_SOC_CTRL	0x4000 0000	0x4000 0FFC	4 KBytes
MPU_MSS_L2_BANKA	0x4002 0000	0x4002 0308	780 Bytes
MPU_MSS_L2_BANKB	0x4004 0000	0x4004 0308	780 Bytes
MPU_HSM_DTHE	0x4006 0000	0x4006 0308	780 Bytes
MPU_MSS_MBOX	0x4008 0000	0x4008 0308	780 Bytes
MPU_MSS_PCRA	0x400A 0000	0x400A 0308	780 Bytes
MPU_MSS_QSPI	0x400C 0000	0x400C 0308	780 Bytes
MPU_MSS_CR5A_AXIS	0x400E 0000	0x400E 0308	780 Bytes
MPU_MSS_CR5B_AXIS	0x4010 0000	0x4010 0308	780 Bytes

Copyright © 2025 Texas Instruments Incorporated

Module Name	Base Address	End Address	Size
MPU_DSS_L3_BANKA	0x4012 0000	0x4012 0308	780 Bytes
MPU_DSS_L3_BANKB	0x4014 0000	0x4014 0308	780 Bytes
MPU_DSS_L3_BANKC	0x4016 0000	0x4016 0308	780Bytes
MPU_DSS_L3_BANKD	0x4018 0000	0x4018 0308	780 Bytes
MPU_DSS_HWA_DMA0	0x401A 0000	0x401A 0308	780 Bytes
MPU_DSS_HWA_DMA1	0x401C 0000	0x401C 0308	780 Bytes
MPU_DSS_HWA_PROC	0x401E 0000	0x401E 0308	780 Bytes
MPU_DSS_MBOX	0x4020 0000	0x4020 0308	780 Bytes
MPU_HSM	0x4022 0000	0x4022 0308	780 Bytes
HSM_SOC_PCR	0x40F7 8000	0x40F7 83FC	1 KBytes
HSM_STC	0x40F7 8C00	0x40F7 8D18	284 Bytes
HSM_PBIST	0x40F7 9000	0x40F7 91CC	464 Bytes
HSM_ECC_AGGR	0x40F7 9400	0x40F7 91CC	528 Bytes
HSM_MBOX	0x4400 0000	0x4400 07FC	2 KBytes
HSM_SEC_MGR	0x4600 0000	0x4600 2FFC	12 KBytes
HSM_SEC_RAM	0x4605 0000	0x4605 27FC	10 KBytes
HSM_CTRL	0x4700 0000	0x4700 0FFC	4 KBytes
HSM_TPCCA	0x4702 0000	0x4702 3FFC	16 KBytes
HSM_TPTCA0	0x4704 0000	0x4704 0358	860 Bytes
HSM_TPTCA1	0x4706 0000	0x4706 0358	860 Bytes
HSM_PCR	0x47F7 8000	0x47F7 83FC	1 KBytes
HSM_RTIA	0x47F7 8C00	0x47F7 8CBC	192 Bytes
HSM_WDT	0x47F7 8D00	0x47F7 8DBC	192 Bytes
HSM_DCCA	0x47F7 9000	0x47F7 9028	44 Bytes
HSM_ESM	0x47F7 9400	0x47F7 94DC	224 Bytes
HSM_DMTA	0x47F7 9800	0x47F7 986C	112 Bytes
HSM_DMTB	0x47F7 9900	0x47F7 996C	112 Bytes
DSS_CM4_MBOX	0x4800 0000	0x4800 0FFC	4 KBytes
DSS_CM4_CTRL	0x4802 0000	0x4802 0FFC	4 KBytes
DSS_L2	0x8080 0000	0x8085 FFFC	384 KBytes
DSS_L1P	0x80E0 0000	0x80E0 7FFC	32 KBytes
DSS_L1D	0x80F0 0000	0x80F0 7FFC	32 KBytes
DSS_HWA_DMA0	0x8200 0000	0x8201 FFFC	128 KBytes
DSS_HWA_DMA1	0x8210 0000	0x8211 FFFC	128 KBytes
DSS_MAILBOX	0x8310 0000	0x8310 0FFC	4 KBytes
DSS_CBUFF_FIFO	0x8320 0000	0x8320 3FFC	16 KBytes
DSS_MCRC	0x8330 0000	0x8330 0144	328 Bytes
DSS_MDO_FIFO	0x8340 0000	0x8340 3FFC	16 KBytes
DSS_L3	0x8800 0000	0x8838 FFFC	3.5625 MBytes
RCSS_MCASPA_DATA	0xA008 0000	0xA008 03FC	1 KBytes
RCSS_MCASPB_DATA	0xA008 0400	0xA008 07FC	1 KBytes
MSS_TCMA_CR5A	0xC100 0000	0xC102 7FFC	160 KBytes
MSS_TCMB_CR5A	0xC180 0000	0xC180 7FFC	32 KBytes
MSS_ICACHE_CR5A	0xC200 0000	0xC27F FFFC	8 MBytes
MSS_DCACHE_CR5A	0xC280 0000	0xC2FF FFFC	8 MBytes
MSS_TCMA_CR5B	0xC300 0000	0xC300 3FFC	16 KBytes

Copyright © 2025 Texas Instruments Incorporated

Module Name	Base Address	End Address	Size
MSS_TCMB_CR5B	0xC380 0000	0xC380 3FFC	16 KBytes
MSS_ICACHE_CR5B	0xC400 0000	0xC47F FFFC	8 MBytes
MSS_DCACHE_CR5B	0xC480 0000	0xC4FF FFFC	8 MBytes
MSS_MBOX	0xC500 0000	0xC4FF FFFC	8 KBytes
MSS_RETRAM	0xC501 0000	0xC501 07FC	2 KBytes
MSS_MCRC	0xC502 0000	0xC502 0144	328 Bytes
MSS_GPADC_DATA_RAM	0xC503 0000	0xC503 07FC	2 KBytes
EXT_FLASH	0xC600 0000	0xC7FF FFFC	32 MBytes
MSS_QSPI	0xC800 0000	0xC800 0070	116 Bytes
MSS_MDO_FIFO	0xCA00 0000	0xCA00 FFFC	64 KBytes
MSS_DMM_A_DATA	0xCD00 0000	0xCD00 FFFC	64 KBytes
MSS_DMM_B_DATA	0xCD01 0000	0xCD01 FFFC	64 KBytes
HSM_DTHE	0xCE00 0000	0xCE00 0BFC	3 KBytes
HSM_SHA	0xCE00 4000	0xCE00 4FFC	4 KBytes
HSM_AES	0xCE00 6000	0xCE00 6FFC	4 KBytes
HSM_TRNG	0xCE00 A000	0xCE00 A07C	128 Bytes
HSM_PKA	0xCE01 0000	0xCE01 003C	64 Bytes
HSM_PKA_RAM	0xCE01 4000	0xCE03 3FFC	128 KBytes

Note

TPTC-C2, TPTC-C3, TPTC-C4, and TPTC-C5 modules and their functionality are not supported in this family of devices. *Any information regarding these modules has been retained in the documentation solely for the purpose of clarifying memory map read/write attributes. Features noted as "not supported" must not be used.*

3.2 DSP Subsystem C66x Memory Map

Module Name	Base Address	End Address	Size
DSP_L2	0x0080 0000	0x0085 FFFC	384 KBytes
DSP_L1P	0x00E0 0000	0x00E0 7FFC	32 KBytes
DSP_L1D	0x00F0 0000	0x00F0 7FFC	32 KBytes
DSP_ICFG	0x0180 0000	0x019F FFFC	2 MBytes
MSS_SPIA_RAM	0x0200 0000	0x0200 00FC	256 Bytes
MSS_SPIB_RAM	0x0202 0000	0x0202 00FC	256 Bytes
MSS_MCANA_MSG_RAM	0x0204 0000	0x0205 0FFC	68 KBytes
MSS_VIM_R5A	0x0208 0000	0x0208 23FC	9 KBytes
MSS_VIM_R5B	0x020A 0000	0x020A 23FC	9 KBytes
MSS_IOMUX	0x020C 0000	0x020C 01FC	512 Bytes
MSS_RCM	0x0210 0000	0x0210 0FFC	4 KBytes
MSS_CTRL	0x0212 0000	0x0212 0FFC	4 KBytes
MSS_TOPRCM	0x0214 0000	0x0214 0FFC	4 KBytes
MSS_DEBUGSS	0x02A0 0000	0x02A3 DFFC	248 KBytes
MSS_PCR1	0x02F7 8000	0x02F7 83FC	1 KBytes
TOP_PBIST	0x02F7 9400	0x02F7 95CC	464 Bytes
MSS_R5SS_STC	0x02F7 9800	0x02F7 9918	284 Bytes
MSS_DCCA	0x02F7 9C00	0x02F7 9C28	44 Bytes

Copyright © 2025 Texas Instruments Incorporated

Module Name	Base Address	End Address	Size
MSS_DCCB	0x02F7 9D00	0x02F7 9D28	44 Bytes
MSS_DCCC	0x02F7 9000	0x02F7 9028	44 Bytes
MSS_DCCD	0x02F7 9F00	0x02F7 9F28	44 Bytes
MSS_RTIA	0x02F7 A000	0x02F7 A0BC	192 Bytes
MSS_RTIB	0x02F7 A100	0x02F7 A1BC	192 Bytes
MSS_RTIC	0x02F7 A200	0x02F7 A2BC	192 Bytes
MSS_WDT	0x02F7 A300	0x02F7 A3BC	192 Bytes
MSS_ESM	0x02F7 A400	0x02F7 A4D8	220 Bytes
TOP_EFUSE_FARM	0x02F7 A800	0x02F7 A83C	64 Bytes
MSS_CCMR	0x02F7 AC00	0x02F7 AC18	28 Bytes
MSS_I2C	0x02F7 B000	0x02F7 B060	100 Bytes
MSS_GIO	0x02F7 B400	0x02F7 B551	341 Bytes
MSS_ECC_AGG_R5A	0x02F7 B800	0x02F7 BA0C	528 Bytes
MSS_ECC_AGG_R5B	0x02F7 BC00	0x02F7 BE0C	528 Bytes
MSS_ECC_AGG_MSS	0x02F7 C000	0x02F7 C20C	528 Bytes
MSS_SPIA	0x02F7 E800	0x02F7 E9FC	512 Bytes
MSS_SPIB	0x02F7 EA00	0x02F7 EBFC	512 Bytes
MSS_SCIA	0x02F7 EC00	0x02F7 EC90	148 Bytes
MSS_SCIB	0x02F7 ED00	0x02F7 ED90	148 Bytes
MSS_MCANA_ECC	0x02F7 F800	0x02F7 FA0C	528 Bytes
MSS_MCANA_CFG	0x02F7 FC00	0x02F7 FEFC	768 Bytes
MSS_MCANB_MSG_RAM	0x0304 0000	0x0305 0FFC	68 KBytes
TOP_AURORA_TX	0x0306 0000	0x0306 0FFC	4 KBytes
TOP_MDO_INFRA	0x0308 0000	0x0308 0FFC	4 KBytes
MSS_GPADC_PKT_RAM	0x030C 0000	0x030C 07FC	2 KBytes
TOP_CTRL	0x030E 0000	0x030E 0FFC	4 KBytes
MSS_TPCC_A	0x0310 0000	0x0310 3FFC	16 KBytes
MSS_TPCC_B	0x0312 0000	0x0312 3FFC	16 KBytes
MSS_TPTC_A0	0x0314 0000	0x0314 0358	860 Bytes
MSS_TPTC_A1	0x0316 0000	0x0316 0358	860 Bytes
MSS_TPTC_B0	0x0318 0000	0x0318 0358	860 Bytes
MSS_PCR2	0x03F7 8000	0x03F7 83FC	1 KBytes
MSS_ETPWMA	0x03F7 8C00	0x03F7 8C70	116 Bytes
MSS_ETPWMB	0x03F7 8D00	0x03F7 8D70	116 Bytes
MSS_ETPWMC	0x03F7 8000	0x03F7 8070	116 Bytes
MSS_GPADC_REG	0x03F7 9800	0x03F7 9858	92 Bytes
MSS_DMM_A	0x03F7 9C00	0x03F7 9C8C	144 Bytes
MSS_DMM_B	0x03F7 9000	0x03F7 908C	144 Bytes
MSS_MCANB_ECC	0x03F7 F800	0x03F7 FA0C	528 Bytes
MSS_MCANB_CFG	0x03F7 FC00	0x03F7 FEFC	768 Bytes
RSS_RCM	0x0500 0000	0x0500 0FFC	4 KBytes
RSS_CTRL	0x0502 0000	0x0502 0FFC	4 KBytes
RSS_CSI2A	0x0508 0000	0x0508 01FC	512 Bytes
RSS_PROG_FILT	0x050A 0000	0x050A 00E0	228 Bytes
MPU_RSS_DSS2RSS	0x050C 0000	0x050C 0308	780 Bytes
MPU_RSS_MSS2RSS	0x050E 0000	0x050E 0308	780 Bytes

Copyright © 2025 Texas Instruments Incorporated

Module Name	Base Address	End Address	Size
RSS_TPCC_A	0x0510 0000	0x0510 3FFC	16 KBytes
RSS_TPTC_A0	0x0516 0000	0x0516 0358	860 Bytes
RSS_ECC_AGG	0x051C 0000	0x051C 020C	528 Bytes
RSS_FIR_COEFF	0x051E 0000	0x051E 03FC	1 KBytes
RSS_FIR_DMEM	0x051E 4000	0x051E 43FC	1 KBytes
RSS_PROC_CTRL	0x0520 0000	0x0520 0FFC	4 KBytes
RSS_PROC_ECC_AGG	0x0522 0000	0x0522 020C	528 Bytes
RSS_PCR	0x05F7 8000	0x05F7 83FC	1 KBytes
DSS_RCM	0x0600 0000	0x0600 0FFC	4 KBytes
DSS_CTRL	0x0602 0000	0x0602 0FFC	4 KBytes
DSS_CBUFF	0x0604 0000	0x0604 0230	564 Bytes
DSS_HWA_PARAM	0x0606 0000	0x0606 0FFC	4 KBytes
DSS_HWA_CFG	0x0606 2000	0x0606 2FFC	4 KBytes
DSS_HWA_WINDOW_RAM	0x0606 4000	0x0606 5FFC	8 KBytes
DSS_HWA_MULT_RAM	0x0606 8000	0x0606 9FFC	8 KBytes
DSS_HWA_DEROT_RAM	0x0606 C000	0x0606 C0FC	256 Bytes
DSS_HWA_SHUFFLE_RAM	0x0606 E000	0x0606 E1FC	512 Bytes
DSS_HWA_2DSTAT_ITER_VAL_RAM	0x0608 0000	0x0608 0FFC	4 KBytes
DSS_HWA_2DSTAT_ITER_IDX_RAM	0x0608 2000	0x0608 27FC	2 KBytes
DSS_HWA_2DSTAT_SMPL_VAL_RAM	0x0608 4000	0x0608 43FC	1 KBytes
DSS_HWA_2DSTAT_SMPL_IDX_RAM	0x0608 6000	0x0608 61FC	512 Bytes
DSS_HWA_HIST_RAM	0x0608 8000	0x0608 9FFC	8 KBytes
DSS_HWA_HIST_THRESH_RAM	0x0608 C000	0x0608 C0FC	256 Bytes
DSS_ECC_AGG	0x060A 0000	0x060A 020C	528 Bytes
DSS_TPCC_A	0x0610 0000	0x0610 3FFC	16 KBytes
DSS_TPCC_B	0x0612 0000	0x0612 3FFC	16 KBytes
DSS_TPCC_C	0x0614 0000	0x0614 3FFC	16 KBytes
DSS_TPTC_A0	0x0616 0000	0x0616 0358	860 Bytes
DSS_TPTC_A1	0x0618 0000	0x0618 0358	860 Bytes
DSS_TPTC_B0	0x061A 0000	0x061A 0358	860 Bytes
DSS_TPTC_B1	0x061C 0000	0x061C 0358	860 Bytes
DSS_TPTC_C0	0x061E 0000	0x061E 0358	860 Bytes
DSS_TPTC_C1	0x0620 0000	0x0620 0358	860 Bytes
DSS_TPTC_C2	0x0622 0000	0x0622 0358	860 Bytes
DSS_TPTC_C3	0x0624 0000	0x0624 0358	860 Bytes
DSS_TPTC_C4	0x0626 0000	0x0626 0358	860 Bytes
DSS_TPTC_C5	0x0628 0000	0x0628 0358	860 Bytes
DSS_PCR	0x06F7 8000	0x06F7 83FC	1 KBytes
DSS_DSP_PBIST	0x06F7 9000	0x06F7 91CC	464 Bytes
DSS_DSP_STC	0x06F7 9200	0x06F7 9318	284 Bytes
DSS_CM4_STC	0x06F7 9400	0x06F7 9518	284 Bytes
DSS_DCCA	0x06F7 9C00	0x06F7 9C28	44 Bytes
DSS_DCCB	0x06F7 9D00	0x06F7 9D28	44 Bytes
DSS_RTIA	0x06F7 A000	0x06F7 A0BC	192 Bytes
DSS_RTIB	0x06F7 A100	0x06F7 A1BC	192 Bytes
DSS_WDT	0x06F7 A200	0x06F7 A2BC	192 Bytes

Copyright © 2025 Texas Instruments Incorporated

Module Name	Base Address	End Address	Size
DSS_SCIA	0x06F7 B000	0x06F7 B090	148 Bytes
DSS_CMC_CFG	0x06F7 C000	0x06F7 C030	52 Bytes
DSS_ESM	0x06F7 D000	0x06F7 D0D8	220 Bytes
MSS_CPSW	0x0700 0000	0x0703 EFFC	252 KBytes
HSM_ROM	0x2000 0000	0x2000 FFFC	64 KBytes
HSM_RAM	0x2002 0000	0x2004 FFFC	192 KBytes
DSS_CM4_RAM	0x2800 0000	0x2800 FFFC	64 KBytes
HSM_SOC_CTRL	0x4000 0000	0x4000 0FFC	4 KBytes
MPU_MSS_L2_BANKA	0x4002 0000	0x4002 0308	780 Bytes
MPU_MSS_L2_BANKB	0x4004 0000	0x4004 0308	780 Bytes
MPU_HSM_DTHE	0x4006 0000	0x4006 0308	780 Bytes
MPU_MSS_MBOX	0x4008 0000	0x4008 0308	780 Bytes
MPU_MSS_PCRA	0x400A 0000	0x400A 0308	780 Bytes
MPU_MSS_QSPI	0x400C 0000	0x400C 0308	780 Bytes
MPU_MSS_CR5A_AXIS	0x400E 0000	0x400E 0308	780 Bytes
MPU_MSS_CR5B_AXIS	0x4010 0000	0x4010 0308	780 Bytes
MPU_DSS_L3_BANKA	0x4012 0000	0x4012 0308	780 Bytes
MPU_DSS_L3_BANKB	0x4014 0000	0x4014 0308	780 Bytes
MPU_DSS_L3_BANKC	0x4016 0000	0x4016 0308	780 Bytes
MPU_DSS_L3_BANKD	0x4018 0000	0x4018 0308	780 Bytes
MPU_DSS_HWA_DMA0	0x401A 0000	0x401A 0308	780 Bytes
MPU_DSS_HWA_DMA1	0x401C 0000	0x401C 0308	780 Bytes
MPU_DSS_HWA_PROC	0x401E 0000	0x401E 0308	780 Bytes
MPU_DSS_MBOX	0x4020 0000	0x4020 0308	780 Bytes
MPU_HSM	0x4022 0000	0x4022 0308	780 Bytes
HSM_SOC_PCR	0x40F7 8000	0x40F7 83FC	1 KBytes
HSM_STC	0x40F7 8C00	0x40F7 8D18	284 Bytes
HSM_PBIST	0x40F7 9000	0x40F7 91CC	464 Bytes
HSM_ECC_AGGR	0x40F7 9400	0x40F7 960C	528 Bytes
HSM_MBOX	0x4400 0000	0x4400 07FC	2 KBytes
HSM_SEC_MGR	0x4600 0000	0x4600 2FFC	12 KBytes
HSM_SEC_RAM	0x4605 0000	0x4605 27FC	10 KBytes
HSM_CTRL	0x4700 0000	0x4700 0FFC	4 KBytes
HSM_TPCCA	0x4702 0000	0x4702 3FFC	16 KBytes
HSM_TPTCA0	0x4704 0000	0x4704 0358	860 Bytes
HSM_TPTCA1	0x4706 0000	0x4706 0358	860 Bytes
HSM_PCR	0x47F7 8000	0x47F7 83FC	1 KBytes
HSM_RTIA	0x47F7 8C00	0x47F7 8CBC	192 Bytes
HSM_WDT	0x47F7 8D00	0x47F7 8DBC	192 Bytes
HSM_DCCA	0x47F7 9000	0x47F7 9028	44 Bytes
HSM_ESM	0x47F7 9400	0x47F7 94D8	220 Bytes
HSM_DMTA	0x47F7 9800	0x47F7 986C	112 Bytes
HSM_DMTB	0x47F7 9900	0x47F7 996C	112 Bytes
DSS_CM4_MBOX	0x4800 0000	0x4800 0FFC	4 KBytes
DSS_CM4_CTRL	0x4802 0000	0x4802 0FFC	4 KBytes
DSS_L2	0x8080 0000	0x8085 FFFC	384 KBytes

Copyright © 2025 Texas Instruments Incorporated

Module Name	Base Address	End Address	Size
DSS_L1P	0x80E0 0000	0x80E0 7FFC	32 KBytes
DSS_L1D	0x80F0 0000	0x80F0 7FFC	32 KBytes
DSS_HWA_DMA0	0x8200 0000	0x8201 FFFC	128 KBytes
DSS_HWA_DMA1	0x8210 0000	0x8211 FFFC	128 KBytes
DSS_MAILBOX	0x8310 0000	0x8310 0FFC	4 KBytes
DSS_CBUFF_FIFO	0x8320 0000	0x8320 3FFC	16 KBytes
DSS_MCRC	0x8330 0000	0x8330 0144	328 Bytes
DSS_MDO_FIFO	0x8340 0000	0x8340 3FFC	16 KBytes
DSS_CMC_UCOMP0	0x8500 0000	0x8500 0FFC	4 KBytes
DSS_CMC_UCOMP1	0x8500 1000	0x8500 1FFC	4 KBytes
DSS_CMC_UCOMP2	0x8500 2000	0x8500 2FFC	4 KBytes
DSS_CMC_UCOMP3	0x8500 3000	0x8500 3FFC	4 KBytes
DSS_CMC_COMP	0x8508 0000	0x8508 3FFC	16 KBytes
DSS_L3	0x8800 0000	0x8838 FFFC	3.5625 MBytes
RSS_ADCBUF_WRITE	0xA400 0000	0xA400 3FFC	16 KBytes
RSS_CHIRP_INFO_WRITE	0xA401 0000	0xA401 1FFC	8 KBytes
RSS_STATIC_MEM	0xA402 0000	0xA402 3FFC	16 KBytes
RSS_CR4_MBOX	0xA403 0000	0xA403 1FFC	8 KBytes
RSS_ADCBUF_READ	0xA500 0000	0xA500 3FFC	16 KBytes
RSS_CHIRP_INFO_READ	0xA501 0000	0xA501 1FFC	8 KBytes
MSS_L2	0xC020 0000	0xC02E FFFC	960 KBytes
MSS_TCMA_CR5A_ROM	0xC100 0000	0xC101 FFFC	128 KBytes
MSS_TCMA_CR5A (RAM in Lock Step)	0xC100 0000	0xC102 7FFC	32 KBytes
MSS_TCMB_CR5A (RAM in Lock Step)	0xC180 0000	0xC180 7FFC	32 KBytes
MSS_TCMA_CR5A (RAM in Dual Core)	0xC100 0000	0xC102 3FFC	16 KBytes
MSS_TCMB_CR5A (RAM in Dual Core)	0xC180 0000	0xC180 3FFC	16 KBytes
MSS_TCMA_CR5B (RAM in Dual Core)	0xC300 0000	0xC300 3FFC	16 KBytes
MSS_TCMB_CR5B (RAM in Dual Core)	0xC380 0000	0xC380 3FFC	16 KBytes
MSS_ICACHE_CR5A	0xC200 0000	0xC27F FFFC	8 MBytes
MSS_DCACHE_CR5A	0xC280 0000	0xC2FF FFFC	8 MBytes
MSS_ICACHE_CR5B	0xC400 0000	0xC47F FFFC	8 MBytes
MSS_DCACHE_CR5B	0xC480 0000	0xC4FF FFFC	8 MBytes
MSS_MBOX	0xC500 0000	0xC500 1FFC	8 KBytes
MSS_RETRAM	0xC501 0000	0xC501 07FC	2 KBytes
MSS_MCRC	0xC502 0000	0xC502 0144	328 Bytes
MSS_GPADC_DATA_RAM	0xC503 0000	0xC503 07FC	2 KBytes
EXT_FLASH	0xC600 0000	0xC7FF FFFC	32 MBytes
MSS_QSPI	0xC800 0000	0xC800 0070	116 Bytes
MSS_MDO_FIFO	0xCA00 0000	0xCA00 FFFC	64 KBytes
MSS_DMM_A_DATA	0xCD0 00000	0xCD00 FFFC	64 KBytes
MSS_DMM_B_DATA	0xCD0 10000	0xCD01 FFFC	64 KBytes
HSM_DTHE	0xCE00 0000	0xCE00 0BFC	3 KBytes
HSM_SHA	0xCE00 4000	0xCE00 4FFC	4 KBytes
HSM_AES	0xCE00 6000	0xCE00 6FFC	4 KBytes
HSM_TRNG	0xCE00 A000	0xCE00 A07C	128 Bytes
HSM_PKA	0xCE01 0000	0xCE01 1FFC	8 KBytes

Copyright © 2025 Texas Instruments Incorporated

Module Name	Base Address	End Address	Size
HSM_PKA_RAM	0xCE01 4000	0xCE03 3FFC	128 KBytes

3.3 Radar Control Subsystem Memory Map

Module Name	Base Address	Final Address	Size
DSP_L2	0x0080 0000	0x0085 FFFC	384 KBytes
DSP_L1P	0x00E0 0000	0x00E0 7FFC	32 KBytes
DSP_L1D	0x00F0 0000	0x00F0 7FFC	32 KBytes
DSP_ICFG	0x0180 0000	0x017F FFFE	2 MBytes
MSS_SPIA_RAM	0x0200 0000	0x0200 00FC	256 Bytes
MSS_SPIB_RAM	0x0202 0000	0x0202 00FC	256 Bytes
MSS_MCANA_MSG_RAM	0x0204 0000	0x0205 0FFC	68 KBytes
MSS_VIM_R5A	0x0208 0000	0x0208 23FC	9 KBytes
MSS_VIM_R5B	0x020A 0000	0x020A 23FC	9 KBytes
MSS_IOMUX	0x020C 0000	0x020C 01FC	512 Bytes
MSS_RCM	0x0210 0000	0x0210 0FFC	4 KBytes
MSS_CTRL	0x0212 0000	0x0212 0FFC	4 KBytes
MSS_TOPRCM	0x0214 0000	0x0214 0FFC	4 KBytes
MSS_DEBUGSS	0x02A0 0000	0x02A3 DFFC	248 KBytes
MSS_PCR1	0x02F7 8000	0x02F7 83FC	1 KBytes
TOP_PBIST	0x02F7 9400	0x02F7 95CC	464 Bytes
MSS_R5SS_STC	0x02F7 9800	0x02F7 9918	284 Bytes
MSS_DCCA	0x02F7 9C00	0x02F7 9C28	44 Bytes
MSS_DCCB	0x02F7 9D00	0x02F7 9D28	44 Bytes
MSS_DCCC	0x02F7 9E00	0x02F7 9E28	44 Bytes
MSS_DCCD	0x02F7 9F00	0x02F7 9F28	44 Bytes
MSS_RTIA	0x02F7 A000	0x02F7 A0BC	192 Bytes
MSS_RTIB	0x02F7 A100	0x02F7 A1BC	192 Bytes
MSS_RTIC	0x02F7 A200	0x02F7 A2BC	192 Bytes
MSS_WDT	0x02F7 A300	0x02F7 A3BC	192 Bytes
MSS_ESM	0x02F7 A400	0x02F7 A4DC	224 Bytes
TOP_EFUSE_FARM	0x02F7 A800	0x02F7 A83C	64 Bytes
MSS_CCMR	0x02F7 AC00	0x02F7 AC18	28 Bytes
MSS_I2C	0x02F7 B000	0x02F7 B060	100 Bytes
MSS_GIO	0x02F7 B400	0x02F7 B551	341 Bytes
MSS_ECC_AGG_R5A	0x02F7 B800	0x02F7 BA0C	528 Bytes
MSS_ECC_AGG_R5B	0x02F7 BC00	0x02F7 BE0C	528 Bytes
MSS_ECC_AGG_MSS	0x02F7 C000	0x02F7 C20C	528 Bytes
MSS_SPIA	0x02F7 E800	0x02F7 E9FC	512 Bytes
MSS_SPIB	0x02F7 EA00	0x02F7 EBFC	512 Bytes
MSS_SCIA	0x02F7 EC00	0x02F7 EC90	148 Bytes
MSS_SCIB	0x02F7 ED00	0x02F7 ED90	148 Bytes
MSS_MCANA_ECC	0x02F7 F800	0x02F7 FA0C	528 Bytes
MSS_MCANA_CFG	0x02F7 FC00	0x02F7 FEFC	768 Bytes
MSS_MCANB_MSG_RAM	0x0304 0000	0x0305 0FFC	68 KBytes
TOP_AURORA_TX	0x0306 0000	0x0306 0FFC	4 KBytes
TOP_MDO_INFRA	0x0308 0000	0x0308 0FFC	4 KBytes

Copyright © 2025 Texas Instruments Incorporated

Module Name	Base Address	Final Address	Size
MSS_GPADC_PKT_RAM	0x030C 0000	0x030C 07FC	2 KBytes
TOP_CTRL	0x030E 0000	0x030E 0FFC	4 KBytes
MSS_TPCC_A	0x0310 0000	0x0310 3FFC	16 KBytes
MSS_TPCC_B	0x0312 0000	0x0312 3FFC	16 KBytes
MSS_TPTC_A0	0x0314 0000	0x0314 0358	860 Bytes
MSS_TPTC_A1	0x0316 0000	0x0316 0358	860 Bytes
MSS_TPTC_B0	0x0318 0000	0x0318 0358	860 Bytes
MSS_PCR2	0x03F7 8000	0x03F7 83FC	1 KBytes
MSS_ETPWMA	0x03F7 8C00	0x03F7 8C70	116 Bytes
MSS_ETPWMB	0x03F7 8D00	0x03F7 8D70	116 Bytes
MSS_ETPWMC	0x03F7 8E00	0x03F7 8E70	116 Bytes
MSS_GPADC_REG	0x03F7 9800	0x03F7 9858	92 Bytes
MSS_DMM_A	0x03F7 9C00	0x03F7 9C8C	144 Bytes
MSS_DMM_B	0x03F7 9E00	0x03F7 9E8C	144 Bytes
MSS_MCANB_ECC	0x03F7 F800	0x03F7 FA0C	528 Bytes
MSS_MCANB_CFG	0x03F7 FC00	0x03F7 FEFC	768 Bytes
RCSS_RCM	0x0500 0000	0x0500 0FFC	4 KBytes
RCSS_CTRL	0x0502 0000	0x0502 0FFC	4 KBytes
RCSS_SPIA_RAM	0x0504 0000	0x0504 00FC	256 Bytes
RCSS_SPIB_RAM	0x0506 0000	0x0506 00FC	256 Bytes
RCSS_CSI2A	0x0508 0000	0x0508 0184	392 Bytes
RCSS_CSI2B	0x050A 0000	0x050A 0184	392 Bytes
RCSS_SCI_A	0x050C 0000	0x050C 0FFC	4 KBytes
RCSS_TPCC_A	0x0510 0000	0x0510 3FFC	16 KBytes
RCSS_TPTC_A0	0x0516 0000	0x0516 0358	860 Bytes
RCSS_TPTC_A1	0x0518 0000	0x0518 0358	860 Bytes
RCSS_MCASP_A	0x051E 0000	0x051E 0FFC	4 KBytes
RCSS_MCASP_B	0x0520 0000	0x0520 0FFC	4 KBytes
RCSS_MCASP_C	0x0522 0000	0x0522 0FFC	4 KBytes
RCSS_ATL	0x0524 0000	0x0524 039C	928 Bytes
RCSS_PCR	0x05F7 8000	0x05F7 83FC	1 KBytes
RCSS_ECAP	0x05F7 9C00	0x05F7 9C3C	64 Bytes
RCSS_GIO	0x05F7 B400	0x05F7 B551	341 Bytes
RCSS_SPIA	0x05F7 E800	0x05F7 E9FC	512 Bytes
RCSS_SPIB	0x05F7 EA00	0x05F7 EBFC	512 Bytes
RCSS_I2CA	0x05F7 EC00	0x05F7 EC60	100 Bytes
RCSS_I2CB	0x05F7 F000	0x05F7 F060	100 Bytes
DSS_RCM	0x0600 0000	0x0600 0FFC	4 KBytes
DSS_CTRL	0x0602 0000	0x0602 0FFC	4 KBytes
DSS_CBUFF	0x0604 0000	0x0604 0230	564 Bytes
DSS_HWA_PARAM	0x0606 0000	0x0606 0FFC	4 KBytes
DSS_HWA_CFG	0x0606 2000	0x0606 2FFC	4 KBytes
DSS_HWA_WINDOW_RAM	0x0606 4000	0x0606 5FFC	8 KBytes
DSS_HWA_MULT_RAM	0x0606 8000	0x0606 9FFC	8 KBytes
DSS_HWA_DEROT_RAM	0x0606 C000	0x0606 C0FC	256 Bytes
DSS_HWA_SHUFFLE_RAM	0x0606 E000	0x0606 E1FC	512 Bytes

Copyright © 2025 Texas Instruments Incorporated

Module Name	Base Address	Final Address	Size
DSS_HWA_2DSTAT_ITER_VAL_RAM	0x0608 0000	0x0608 0FFC	4 KBytes
DSS_HWA_2DSTAT_ITER_IDX_RAM	0x0608 2000	0x0608 27FC	2 KBytes
DSS_HWA_2DSTAT_SMPL_VAL_RAM	0x0608 4000	0x0608 43FC	1 KBytes
DSS_HWA_2DSTAT_SMPL_IDX_RAM	0x0608 6000	0x0608 61FC	512 Bytes
DSS_HWA_HIST_RAM	0x0608 8000	0x0608 9FFC	8 KBytes
DSS_HWA_HIST_THRESH_RAM	0x0608 C000	0x0608 C0FC	256 Bytes
DSS_ECC_AGG	0x060A 0000	0x060A 020C	528 Bytes
DSS_TPCC_A	0x0610 0000	0x0610 3FFC	16 KBytes
DSS_TPCC_B	0x0612 0000	0x0612 3FFC	16 KBytes
DSS_TPCC_C	0x0614 0000	0x0614 3FFC	16 KBytes
DSS_TPTC_A0	0x0616 0000	0x0616 0358	860 Bytes
DSS_TPTC_A1	0x0618 0000	0x0618 0358	860 Bytes
DSS_TPTC_B0	0x061A 0000	0x061A 0358	860 Bytes
DSS_TPTC_B1	0x061C 0000	0x061C 0358	860 Bytes
DSS_TPTC_C0	0x061E 0000	0x061E 0358	860 Bytes
DSS_TPTC_C1	0x0620 0000	0x0620 0358	860 Bytes
DSS_TPTC_C2	0x0622 0000	0x0622 0358	860 Bytes
DSS_TPTC_C3	0x0624 0000	0x0624 0358	860 Bytes
DSS_TPTC_C4	0x0626 0000	0x0626 0358	860 Bytes
DSS_TPTC_C5	0x0628 0000	0x0628 0358	860 Bytes
DSS_PCR	0x06F7 8000	0x06F7 83FC	1 KBytes
DSS_DSP_PBIST	0x06F7 9000	0x06F7 91CC	464 Bytes
DSS_DSP_STC	0x06F7 9200	0x06F7 9318	284 Bytes
DSS_CM4_STC	0x06F7 9400	0x06F7 9518	284 Bytes
DSS_DCCA	0x06F7 9C00	0x06F7 9C28	44 Bytes
DSS_DCCB	0x06F7 9D00	0x06F7 9D28	44 Bytes
DSS_RTIA	0x06F7 A000	0x06F7 A0BC	192 Bytes
DSS_RTIB	0x06F7 A100	0x06F7 A1BC	192 Bytes
DSS_WDT	0x06F7 A200	0x06F7 A2BC	192 Bytes
DSS_SCIA	0x06F7 B000	0x06F7 B090	148 Bytes
DSS_CMC_CFG	0x06F7 C000	0x06F7 C030	52 Bytes
DSS_ESM	0x06F7 D000	0x06F7 D0DC	224 Bytes
MSS_CPSW	0x0700 0000	0x0703 EFFC	252 KBytes
HSM_ROM	0x2000 0000	0x2000 FFFC	64 KBytes
HSM_RAM	0x2002 0000	0x2004 FFFC	192 KBytes
DSS_CM4_RAM	0x2800 0000	0x2800 FFFC	64 KBytes
HSM_SOC_CTRL	0x4000 0000	0x4000 0FFC	4 KBytes
MPU_MSS_L2_BANKA	0x4002 0000	0x4002 0308	780 Bytes
MPU_MSS_L2_BANKB	0x4004 0000	0x4004 0308	780 Bytes
MPU_HSM_DTHE	0x4006 0000	0x4006 0308	780 Bytes
MPU_MSS_MBOX	0x4008 0000	0x4008 0308	780 Bytes
MPU_MSS_PCRA	0x400A 0000	0x400A 0308	780 Bytes

Copyright © 2025 Texas Instruments Incorporated

Module Name	Base Address	Final Address	Size
MPU_MSS_QSPI	0x400C 0000	0x400C 0308	780 Bytes
MPU_MSS_CR5A_AXIS	0x400E 0000	0x400E 0308	780 Bytes
MPU_MSS_CR5B_AXIS	0x4010 0000	0x4010 0308	780 Bytes
MPU_DSS_L3_BANKA	0x4012 0000	0x4012 0308	780 Bytes
MPU_DSS_L3_BANKB	0x4014 0000	0x4014 0308	780 Bytes
MPU_DSS_L3_BANKC	0x4016 0000	0x4016 0308	780 Bytes
MPU_DSS_L3_BANKD	0x4018 0000	0x4018 0308	780 Bytes
MPU_DSS_HWA_DMA0	0x401A 0000	0x401A 0308	780 Bytes
MPU_DSS_HWA_DMA1	0x401C 0000	0x401C 0308	780 Bytes
MPU_DSS_HWA_PROC	0x401E 0000	0x401E 0308	780 Bytes
MPU_DSS_MBOX	0x4020 0000	0x4020 0308	780 Bytes
MPU_HSM	0x4022 0000	0x4022 0308	780 Bytes
HSM_SOC_PCR	0x40F7 8000	0x40F7 83FC	1 KBytes
HSM_STC	0x40F7 8C00	0x40F7 8D18	284 Bytes
HSM_PBIST	0x40F7 9000	0x40F7 91CC	464 Bytes
HSM_ECC_AGGR	0x40F7 9400	0x40F7 960C	528 Bytes
HSM_MBOX	0x4400 0000	0x4400 07FC	2 KBytes
HSM_SEC_MGR	0x4600 0000	0x4600 2FFC	12 KBytes
HSM_SEC_RAM	0x4605 0000	0x4605 27FC	10 KBytes
HSM_CTRL	0x4700 0000	0x4700 0FFC	4 KBytes
HSM_TPCCA	0x4702 0000	0x4702 3FFC	16 KBytes
HSM_TPTCA0	0x4704 0000	0x4704 0358	860 Bytes
HSM_TPTCA1	0x4706 0000	0x4706 0358	860 Bytes
HSM_PCR	0x47F7 8000	0x47F7 83FC	1 KBytes
HSM_RTIA	0x47F7 8C00	0x47F7 8CBC	192 Bytes
HSM_WDT	0x47F7 8D00	0x47F7 8DBC	192 Bytes
HSM_DCCA	0x47F7 9000	0x47F7 9028	44 Bytes
HSM_ESM	0x47F7 9400	0x47F7 94DC	224 Bytes
HSM_DMTA	0x47F7 9800	0x47F7 986C	112 Bytes
HSM_DMTB	0x47F7 9900	0x47F7 996C	112 Bytes
DSS_CM4_MBOX	0x4800 0000	0x4800 0FFC	4 KBytes
DSS_CM4_CTRL	0x4802 0000	0x4802 0FFC	4 KBytes
DSS_L2	0x8080 0000	0x8085 FFFC	384 KBytes
DSS_L1P	0x80E0 0000	0x80E0 7FFC	32 KBytes
DSS_L1D	0x80F0 0000	0x80F0 7FFC	32 KBytes
DSS_HWA_DMA0	0x8200 0000	0x8201 FFFC	128 KBytes
DSS_HWA_DMA1	0x8210 0000	0x8211 FFFC	128 KBytes
DSS_MAILBOX	0x8310 0000	0x8310 0FFC	4 KBytes
DSS_CBUFF_FIFO	0x8320 0000	0x8320 3FFC	16 KBytes
DSS_MCRC	0x8330 0000	0x8330 0144	328 Bytes
DSS_MDO_FIFO	0x8340 0000	0x8340 3FFC	16 KBytes
DSS_CMC_UCOMP0	0x8500 0000	0x8500 0FFC	4 KBytes
DSS_CMC_UCOMP1	0x8500 1000	0x8500 1FFC	4 KBytes
DSS_CMC_UCOMP2	0x8500 2000	0x8500 2FFC	4 KBytes
DSS_CMC_UCOMP3	0x8500 3000	0x8500 3FFC	4 KBytes
DSS_CMC_COMP	0x8508 0000	0x8508 3FFC	16 KBytes

Copyright © 2025 Texas Instruments Incorporated

Module Name	Base Address	Final Address	Size
DSS_L3	0x8800 0000	0x8838 FFFF	3.5625 MBytes
RCSS_MCASPA_DATA	0xA008 0000	0xA008 03FC	1 KBytes
RCSS_MCASPB_DATA	0xA008 0400	0xA008 07FC	1 KBytes
MSS_L2	0xC020 0000	0xC02E FFFC	960 KBytes
MSS_TCMA_CR5A_ROM	0xC100 0000	0xC101 FFFC	128 KBytes
MSS_TCMA_CR5A (RAM in Lock Step)	0xC100 0000	0xC102 7FFC	32 KBytes
MSS_TCMB_CR5A (RAM in Lock Step)	0xC180 0000	0xC180 7FFC	32 KBytes
MSS_TCMA_CR5A (RAM in Dual Core)	0xC100 0000	0xC102 3FFC	16 KBytes
MSS_TCMB_CR5A (RAM in Dual Core)	0xC180 0000	0xC180 3FFC	16 KBytes
MSS_TCMA_CR5B (RAM in Dual Core)	0xC300 0000	0xC300 3FFC	16 KBytes
MSS_TCMB_CR5B (RAM in Dual Core)	0xC380 0000	0xC380 3FFC	16 KBytes
MSS_ICACHE_CR5A	0xC200 0000	0xC200 0004	8 MBytes
MSS_DCACHE_CR5A	0xC280 0000	0xC280 0004	8 MBytes
MSS_ICACHE_CR5B	0xC400 0000	0xC400 0004	8 MBytes
MSS_DCACHE_CR5B	0xC480 0000	0xC480 0004	8 MBytes
MSS_MBOX	0xC500 0000	0xC500 1FFC	8 KBytes
MSS_RETRAM	0xC501 0000	0xC501 07FC	2 KBytes
MSS_MCRC	0xC502 0000	0xC502 0144	328 Bytes
MSS_GPADC_DATA_RAM	0xC503 0000	0xC503 07FC	2 KBytes
EXT_FLASH	0xC600 0000	0xC600 001C	32 MBytes
MSS_QSPI	0xC800 0000	0xC800 0070	116 Bytes
MSS_MDO_FIFO	0xCA00 0000	0xCA00 FFFC	64 KBytes
MSS_DMM_A_DATA	0xCD0 00000	0xCD00 FFFC	64 KBytes
MSS_DMM_B_DATA	0xCD0 10000	0xCD01 FFFC	64 KBytes
HSM_DTHE	0xCE00 0000	0xCE00 0BFC	3 KBytes
HSM_SHA	0xCE00 4000	0xCE00 4FFC	4 KBytes
HSM_AES	0xCE00 6000	0xCE00 6FFC	4 KBytes
HSM_TRNG	0xCE00 A000	0xCE00 A07C	128 Bytes
HSM_PKA	0xCE01 0000	0xCE01 003C	64 Bytes
HSM_PKA_RAM	0xCE01 4000	0xCE03 3FFC	128 KByte

Copyright © 2025 Texas Instruments Incorporated

Chapter 4

System Interconnect

The device implements a system interconnect based on TI's common bus architecture, comprising of VBUSM and VBUSP protocols.

The system interconnect is designed for the high-performance needs of the system. The interconnect structure is a full crossbar implementation, wherein every controller has an independent communication path with every target such that transactions from each controllers have access to full interconnect bandwidth. Arbitration only happens at taget end point. It's divided into interconnect systems local to each subsystem: the Main R5F subsystem, and Radar Control subsystem.

4.1 Main Subsystem R5F Infrastructure

In the main subsystem, the primary VBUSM SCR is responsible for managing the arbitration priority between accesses from multiple controllers to each of the targets. The arbitration priority is always round-robin.

The main subsystem has PCR interconnect that manages the accesses to the peripheral registers and peripheral memories, and provides a global reset for all peripherals. It also supports the capability to selectively enable or disable the clock for each peripheral individually. The PCR also manages the accesses to the system module registers required to configure the device clocks, interrupts, and so forth.

The system module registers include status flags for indicating exception conditions – resets, aborts, errors, and interrupts.

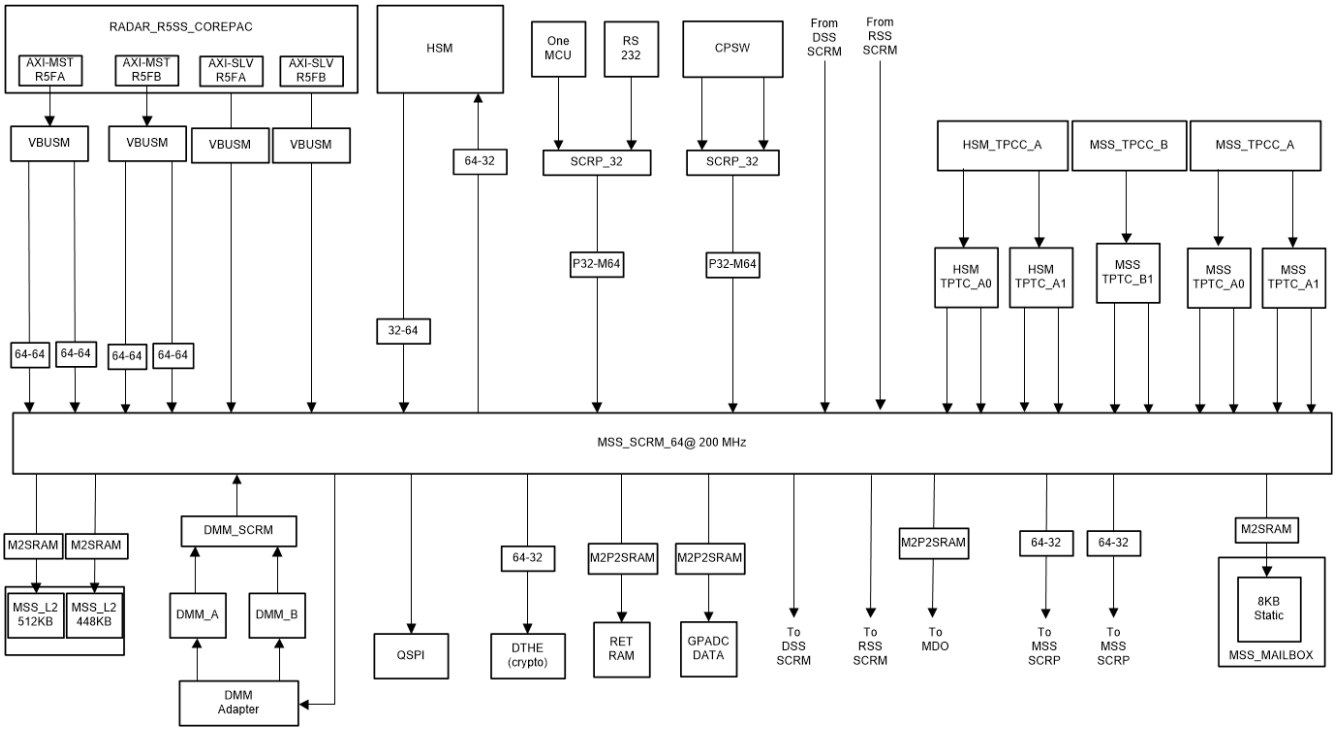

Figure 4-1. Main Subsystem R5F Infrastructure

Copyright © 2025 Texas Instruments Incorporated

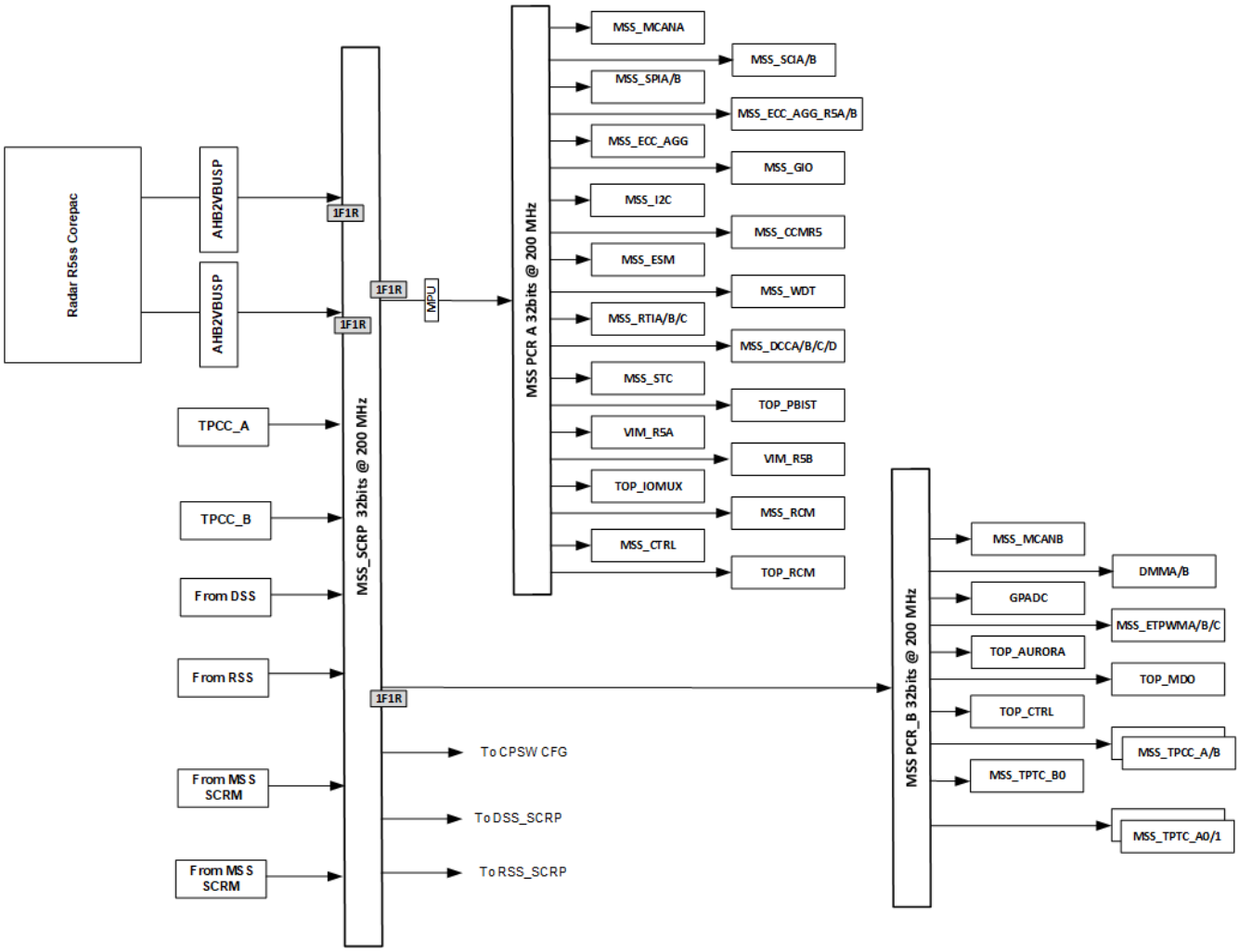

Figure 4-2. MSS Peripheral Infrastructure

Copyright © 2025 Texas Instruments Incorporated

4.2 DSP Subsystem C66x Infrastructure

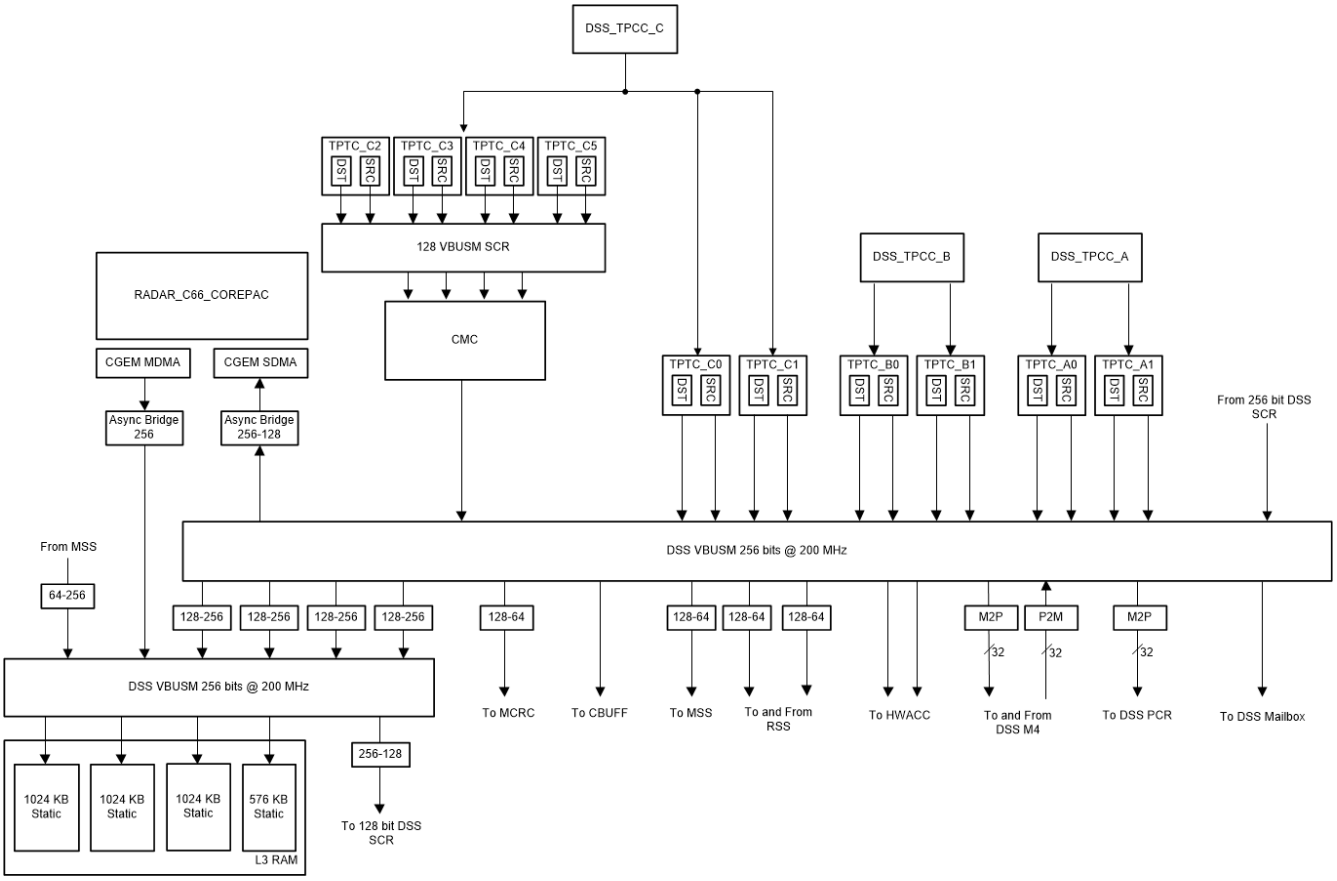

Figure 4-3. DSP Subsystem Infrastructure

The DSS has a hybrid infrastructure of 256-bit and 128-bit data SCRs. This is to match the L3 and DSP MDMA port data widths. The area overhead of hooking up all the other controllers and targets to a 256-bit SCR because the number of bridges required was too large. The MSS Controller also sits on the 256-bit SCR, so that the latency to L3 is reduced.

Copyright © 2025 Texas Instruments Incorporated

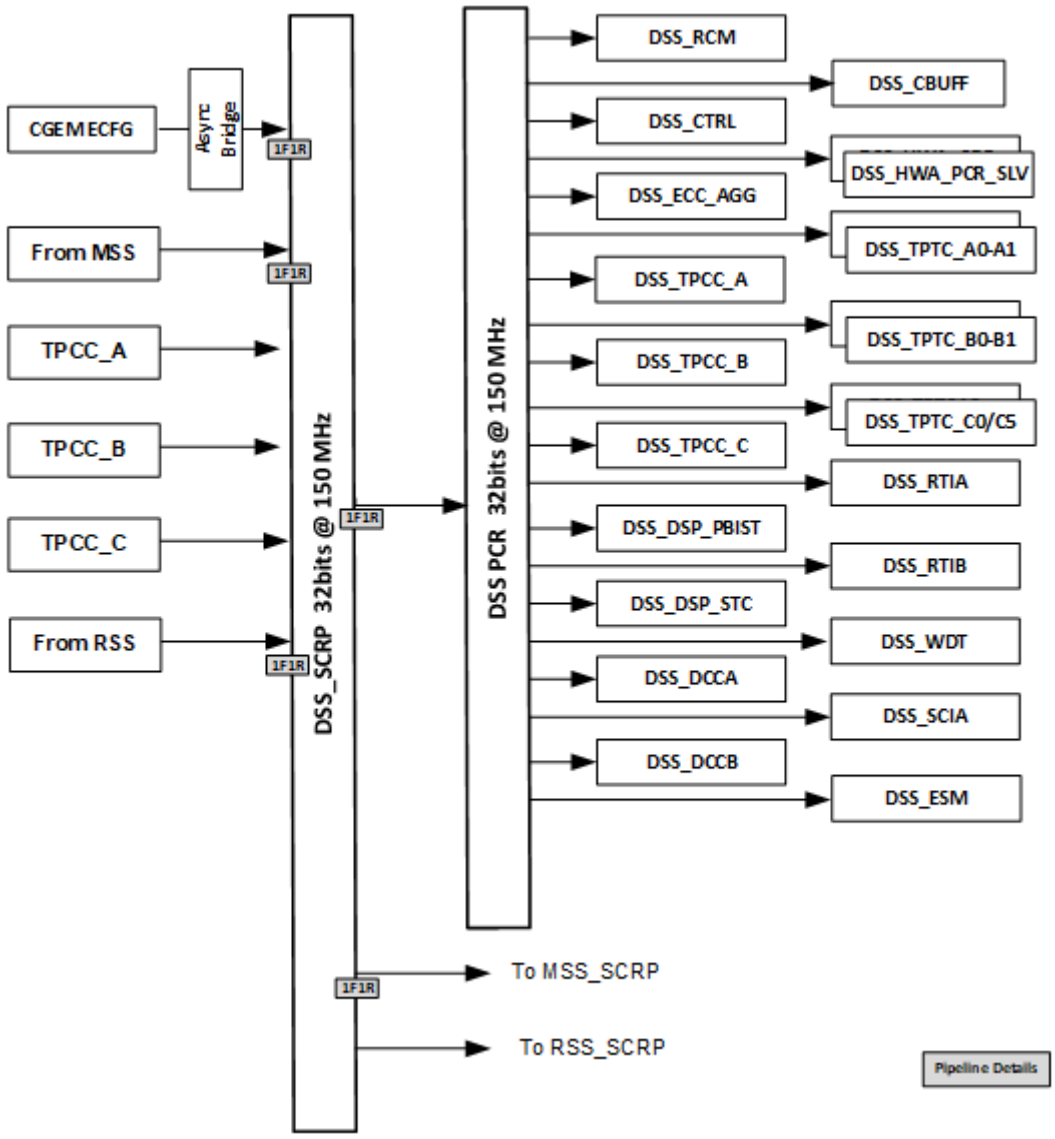

Figure 4-4. DSS Peripheral Infrastructure

Note

TPTC-C2, TPTC-C3, TPTC-C4, and TPTC-C5 modules and their functionality are not supported in this family of devices. *Any information regarding these modules has been retained in the documentation solely for the purpose of clarifying memory map read/write attributes. Features noted as "not supported" must not be used.*

4.3 Radar Control Subsystem Infrastructure

The RControlSS has a 64-bit data SCR

Copyright © 2025 Texas Instruments Incorporated

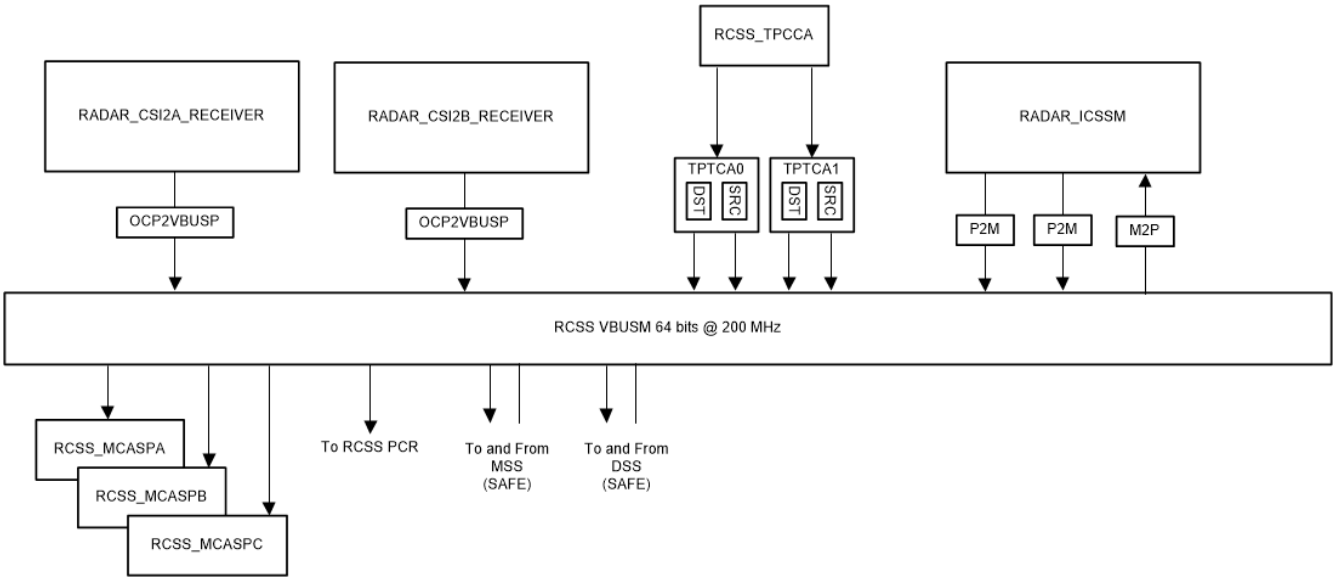

Figure 4-5. Radar Control Subsystem Infrastructure

Copyright © 2025 Texas Instruments Incorporated

Chapter 5

Device Initialization

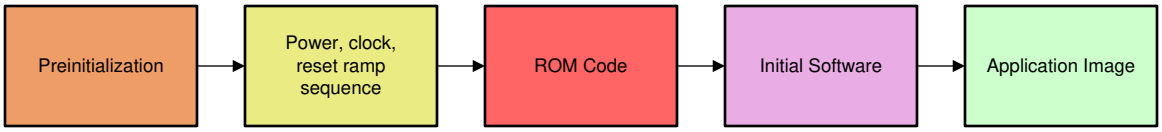

Figure 5-1. Device Initialization

The first two steps in the initialization process are hardware-oriented; however, they require an understanding of the process of configuring these system interface pins (balls on the device), which have software-configurable functionality. This configuration is an essential part of the chip configuration and is application-dependent. This chapter discusses these system-interface pins, the associated configuration registers, and memory structures that are vital to the correct initialization of the device.

5.2 Boot Process

5.2.1 ROM Code Overview

To accommodate various system scenarios, the ROM code supports several boot modes. These boot modes can be broadly classified as:

- Host boot modes
- Memory boot modes.

During a host boot, the device is configured to receive code from a host through the selected interface (such as UART). Either the host writes the application code directly into internal memory over UART, or the ROM code receives the application code on the selected interface and stores it in internal memory.

During a memory boot, the device transfers code from non-volatile memory to internal memory for execution.

In all boot modes, the entire boot operation can be partitioned into two sections:

- Hardware initialization phase
- Boot process

During initialization, the ROM code configures the device resources (PLLs, peripherals, pins) as needed to support the boot process. The resources used depend on the boot mode requirements. During the boot process, the boot image can be loaded into device memory and executed, depending on the boot peripheral. HSM ROM code performs code verification and allows or forbids the image execution.

The main configuration source for boot after power-up are the SOP mode pins sampled automatically after reset release and stored in device status registers. At ROM code startup, these pin values are read from the registers to create the boot peripheral list, and the boot configuration tables used later to initialize and startup the PLLs and boot peripherals.

5.2.2 Boot Modes

MCU ROM supports the functionality of loading the secondary boot loader (SBL). The SBL can be loaded through QSPI (primary/secondary SBL) and UART mode. The primary use case of QSPI programming through UART interface is to support the uniFlash utility. This mode programming may be applicable for certain use

Copyright © 2025 Texas Instruments Incorporated

cases, such as initial FLASH programming in volume mass production, that can also be achieved with special in-circuit gang programming tools.

Primary functional boot mode is through QSPI FLASH. MCU ROM supports managing multiple (primary and backup) QSPI SBL images. It can identify the primary image, and switch to secondary image load if primary image load fails.

Table 5-1. Boot Modes and Boot Media

Boot Mode/Peripheral	Boot Media/Host	Notes
QSPI	QSPI flash	Download and boot SBL from QSPI flash. Attempt Primary SBL, followed by Secondary SBL if primary loading fails: If above is not successful
UART	External host	Download and boot SBL from UART. Device is expected to get SBL from UART. We will support the XMODEM protocol for download over UART.
SBL Dev	Load SBL via debugger/CCS	**Only applicable for HS-FS devices**. SBL download by HSM ROM is skipped and R5 is booted. SBL developers load SBL via CCS JTAG to help development flow to be faster

For more information about various bootmode and flash device support please refer to application note.

Note

Boot ROM does not give software reset to QSPI Flash. Hence is it recommended to make sure Flash is in ready state to accept commands before ROM bootloader kicks in.

5.2.3 SOP Mode Pins

Table 5-2 lists the functional mode pin settings to be done for the SOP lines of the device to boot using different peripheral. New SOP modes will be added later.

Table 5-2. Functional Mode Pin Settings

Functional Mode	SOP Mode	PMIC_OUT	SYNC_OUT	TDO
Func Mode –QSPI	SOP_MODE4	0	0	1
Func Mode –UART	SOP_MODE5	1	0	1
Func Mode –SBL Dev	SOP_MODE6	1	1	0

5.2.4 BOOT-ROM Architecture (RBL)

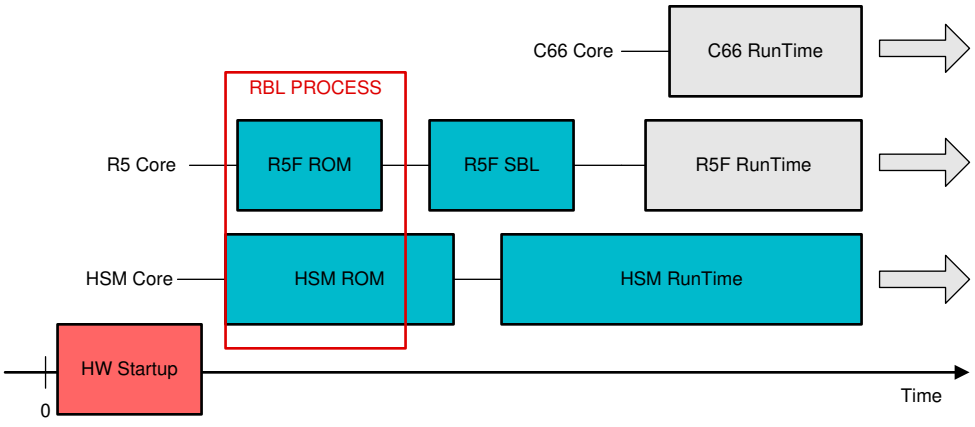

Figure 5-2. Boot Flow and Boot ROM Architecture

Copyright © 2025 Texas Instruments Incorporated

The RBL process goal is to load, verify, optionally decrypt, and launch an authentic R5F software image that accomplishes general-purpose/secure boot goals. The RBL process is implemented jointly by the R5F and HSM ROM as illustrated in Figure 5-2.

HSM ROM

This HSM ROM contains the first set of software instructions that is executed by any processor core on all TPR devices. All state changes in the device after the external reset is released but prior to the beginning of the HSM ROM code execution are purely a function of hardware logic. This hardware logic must perform sufficient ramp up and initialization to allow the Cortex M4 core of the HSM to leave reset and begin execution from its reset vector. The HSM ROM code is “time zero” software. The HSM ROM code is only intended to be used during the initial load of the secondary boot loader (SBL) and HSM RunTime image. HSM ROM is also responsible for providing Test/Debug capabilities when functional boot is interrupted.

MCU ROM

The MCU ROM code is only intended to be used during the initial load of the secondary boot loader (SBL). RBL can load the SBL content only to MSS_L2 area and at the end copies SBL's IVT (interrupt vector table) of 640B size to TCMA_RAM_CR5A before switching to SBL. This ROM-to-RAM (RBL to SBL) switching causes TCMA_ROM_CR5A eclipse to TCMA_RAM_CR5A i.e. 0x0000_0000 now maps to TCMA_RAM_CR5A memory area. Use of RBL at any other time in the lifecycle of a system is not supported. MCU ROM executes set of self-tests: PBIST (DATA SRAM, PROGRAM SRAM, and ROM Code Integrity) using a hardware-defined interface. If unsuccessful, the error condition is indicated, external ESM signal asserted, and boot does not proceed.

R5F SBL

This SBL can perform complete boot sequence on general purpose devices. Customers are expected to develop their own SBLs, supporting a wider range of requirements (such as different interfaces, additional protocols, different image formats, future update flow and so forth).

HSM RunTime/R5F Runtime

HSM RunTime is only applicable in case of Secured (HS) variant and out of scope of this document. R5F user developed applications and loaded/executed by SBL.

5.2.5 R5F SBL Loading

The SBL process starts with R5F executing loaded and verified R5F SBL code.

The only service exposed to R5F SBL by HSM ROM is the API to load the HSM RunTime. All other HSM services are outside of the HSM ROM. The R5 Boot ROM and HSM Boot ROM work together to load the R5F SBL. When the R5F SBL has been successfully validated and loaded, the R5F Boot-ROM is eclipsed and the R5F SBL executes.

Figure 5-3 is the simplified sequence of the boot process. It is provided for illustration purposes only. An illustration of the SBL and HSM RunTime is similar to what is shown in Figure 5-3.

Copyright © 2025 Texas Instruments Incorporated

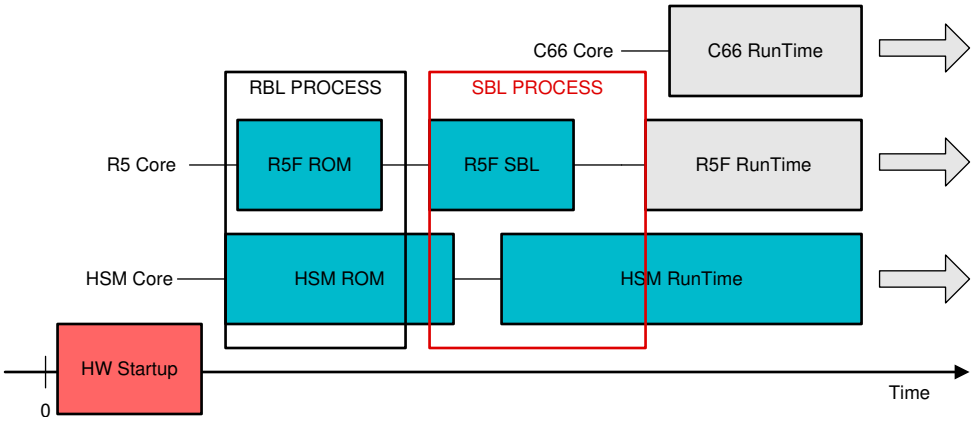

Figure 5-3. R5F SBL

The HSM ROM configures IPC mechanism, and releases R5F from reset, sends boot options message to R5F, and awaits for R5F service calls. R5F reads the boot options and configures QSPI. R5F reads the R5F SBL image. The image may or may not be integrity checked. The HSM ROM switches the memory map and restarts the R5F to SBL. The HSM-ROM for GP devices is now locked (black-boxed). SBL now runs the multicore loader to the DMA-copy image sections to R5F and C66 loading addresses. SBL loads images of R5F and C66, and restarts/jumps to R5F RunTime. R5F RunTime releases the C66 from reset.

Copyright © 2025 Texas Instruments Incorporated

Chapter 6

Device Configuration

6.1 Overview

PRCM manages clocks, resets, and power domain control of subsystems and modules inside the device. Additionally, configuration of certain device-level features is also performed through this module. PRCM has control and status registers to achieve this functionality. The Clock and Reset Management in AM273x is distributed. The Main subsystem TOPRCM module controls all the Subsystem Resets and Clocks. The SubSystem RCM modules control their respective subsystem IPs

The available address space of PRCM is divided as in Figure 6-1.

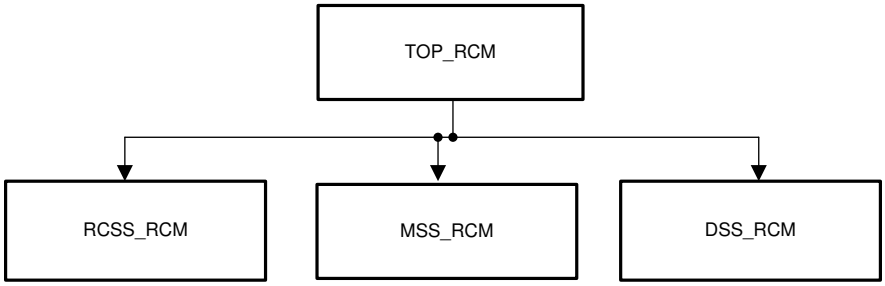

Figure 6-1. Device Configuration

Table 6-1. PRCM Space

PRCM Space	Description
MSS_TOPRCM/TOP_RCM	Top-level reset, clock management registers
MSS_RCM	Main subsystem reset, clock management registers
RCSS_RCM	Radar Control subsystem reset, clock management registers

Note

TOP_RCM and MSS_TOPRCM names are used interchangeably across this document and are pointed to same RCM space.

6.2 Control Registers

6.2.1 Kick Protection Registers

The Control MMR modules have a protection mechanism which prevents spurious writes from changing the values of its registers. The LOCKi_KICK0 and LOCKi_KICK1 registers are used for this purpose. A write is required first to the LOCKi_KICK0[31-1] KEY field and then to the LOCKi_KICK1[31-0] KEY field with exact data values to unlock the protection mechanism. Once released then all registers within Partition "i" having write permissions can be written to. The read only registers are still read only. An indication for unlocked Partition "i" is when the LOCKi_KICK0[0] UNLOCKED bit is set to 1h. When the protection mechanism is locked (indicated by LOCKi_KICK0[0] UNLOCKED = 0h) none of the registers within Partition "i" can be written to. They can only be read.

Copyright © 2025 Texas Instruments Incorporated

The table below shows the values that must be written to the LOCKi_KICK0 and LOCKi_KICK1 registers to unlock each partition. Writing any other data value to either of these registers locks the protection mechanism and blocks any writes to the registers that reside in Partition "i".

The MSS_IOMUX module also has kick protection registers.

Table 6-2. Kick Protection Register Unlock Values

Protected Register	Kick Register	Unlock Value
MSS_TOPRCM	LOCK0_KICK0	0x01234567
	LOCK0_KICK1	0xFEDCBA8
MCC_RCM	LOCK0_KICK0	0x01234567
	LOCK0_KICK1	0xFEDCBA8
RCSS_RCM	LOCK0_KICK0	0x01234567
	LOCK0_KICK1	0xFEDCBA8
DSS_RCM	LOCK0_KICK0	0x01234567
	LOCK0_KICK1	0xFEDCBA8
MSS_CTRL	LOCK0_KICK0	0x01234567
	LOCK0_KICK1	0xFEDCBA8
RCSS_CTRL	LOCK0_KICK0	0x01234567
	LOCK0_KICK1	0xFEDCBA8
DSS_CTRL	LOCK0_KICK0	0x01234567
	LOCK0_KICK1	0xFEDCBA8
IOMUX	LOCK0_KICK0	0x83E70B13
	LOCK0_KICK1	0x95A4F1E0

Copyright © 2025 Texas Instruments Incorporated

6.2.2 TOP_RCM Registers

Table 6-3 lists the TOP_RCM registers. All register offset addresses not listed in Table 6-3 should be considered as reserved locations and the register contents should not be modified.

Table 6-3. TOP_RCM Registers

Offset	Acronym	Register Name	Section
0h	PID	PID register	Section 7.2.2.1
14h	HSI_CLK_SRC_SEL		Section 7.2.2.2
18h	CSIRX_CLK_SRC_SEL		Section 7.2.2.3
1Ch	MCUCLKOUT_CLK_SRC_SEL		Section 7.2.2.4
20h	PMICCLKOUT_CLK_SRC_SEL		Section 7.2.2.5
24h	OBSCLKOUT_CLK_SRC_SEL		Section 7.2.2.6
28h	TRCCLKOUT_CLK_SRC_SEL		Section 7.2.2.7
40h	HSI_DIV_VAL		Section 7.2.2.8
44h	CSIRX_DIV_VAL		Section 7.2.2.9
48h	MCUCLKOUT_DIV_VAL		Section 7.2.2.10
4Ch	PMICCLKOUT_DIV_VAL		Section 7.2.2.11
50h	OBSCLKOUT_DIV_VAL		Section 7.2.2.12
54h	TRCCLKOUT_DIV_VAL		Section 7.2.2.13
80h	HSI_CLK_GATE		Section 7.2.2.14
84h	CSIRX_CLK_GATE		Section 7.2.2.15
88h	MCUCLKOUT_CLK_GATE		Section 7.2.2.16
8Ch	PMICCLKOUT_CLK_GATE		Section 7.2.2.17
90h	OBSCLKOUT_CLK_GATE		Section 7.2.2.18
94h	TRCCLKOUT_CLK_GATE		Section 7.2.2.19
98h	DSS_CLK_GATE		Section 7.2.2.20
C0h	HSI_CLK_STATUS		Section 7.2.2.21
C4h	CSIRX_CLK_STATUS		Section 7.2.2.22
C8h	MCUCLKOUT_CLK_STATUS		Section 7.2.2.23
CCh	PMICCLKOUT_CLK_STATUS		Section 7.2.2.24
D0h	OBSCLKOUT_CLK_STATUS		Section 7.2.2.25
D4h	TRCCLKOUT_CLK_STATUS		Section 7.2.2.26
100h	WARM_RESET_CONFIG		Section 7.2.2.27
104h	SYS_RST_CAUSE		Section 7.2.2.28
108h	SYS_RST_CAUSE_CLR		Section 7.2.2.29
10Ch	DSS_RST_CTRL		Section 7.2.2.30
204h	RS232_BITINTERVAL		Section 7.2.2.31
208h	LVDS_PAD_CTRL0		Section 7.2.2.32
20Ch	LVDS_PAD_CTRL1		Section 7.2.2.33
218h	LIMP_MODE_EN		Section 7.2.2.34
21Ch	PMICCLKOUT_DCDC_CTRL		Section 7.2.2.35
220h	PMICCLKOUT_DCDC_SLOPE		Section 7.2.2.36
224h	RCOSC32K_CTRL		Section 7.2.2.37
400h	PLL_CORE_PWRCTRL		Section 7.2.2.38
404h	PLL_CORE_CLKCTRL		Section 7.2.2.39
408h	PLL_CORE_TENABLE		Section 7.2.2.40
40Ch	PLL_CORE_TENABLEDIV		Section 7.2.2.41

Copyright © 2025 Texas Instruments Incorporated

Table 6-3. TOP_RCM Registers (continued)

Offset	Acronym	Register Name	Section
410h	PLL_CORE_M2NDIV		Section 7.2.2.42
414h	PLL_CORE_MN2DIV		Section 7.2.2.43
418h	PLL_CORE_FRACDIV		Section 7.2.2.44
41Ch	PLL_CORE_BWCTRL		Section 7.2.2.45
420h	PLL_CORE_FRACCTRL		Section 7.2.2.46
424h	PLL_CORE_STATUS		Section 7.2.2.47
428h	PLL_CORE_HSDIVIDER		Section 7.2.2.48
42Ch	PLL_CORE_HSDIVIDER_CLKOUT0		Section 7.2.2.49
430h	PLL_CORE_HSDIVIDER_CLKOUT1		Section 7.2.2.50
434h	PLL_CORE_HSDIVIDER_CLKOUT2		Section 7.2.2.51
438h	PLL_CORE_HSDIVIDER_CLKOUT3		Section 7.2.2.52
43Ch	MSS_CR5_CLK_SRC_SEL		Section 7.2.2.53
440h	MSS_CR5_DIV_VAL		Section 7.2.2.54
444h	SYS_CLK_DIV_VAL		Section 7.2.2.55
448h	MSS_CR5_CLK_GATE		Section 7.2.2.56
44Ch	SYS_CLK_GATE		Section 7.2.2.57
450h	SYS_CLK_STATUS		Section 7.2.2.58
454h	MSS_CR5_CLK_STATUS		Section 7.2.2.59
458h	PLL_CORE_RSTCTRL		Section 7.2.2.60
45Ch	PLL_CORE_HSDIVIDER_RSTCTRL		Section 7.2.2.61
800h	PLL_DSP_PWRCTRL		Section 7.2.2.62
804h	PLL_DSP_CLKCTRL		Section 7.2.2.63
808h	PLL_DSP_TENABLE		Section 7.2.2.64
80Ch	PLL_DSP_TENABLEDIV		Section 7.2.2.65
810h	PLL_DSP_M2NDIV		Section 7.2.2.66
814h	PLL_DSP_MN2DIV		Section 7.2.2.67
818h	PLL_DSP_FRACDIV		Section 7.2.2.68
81Ch	PLL_DSP_BWCTRL		Section 7.2.2.69
820h	PLL_DSP_FRACCTRL		Section 7.2.2.70
824h	PLL_DSP_STATUS		Section 7.2.2.71
828h	PLL_DSP_HSDIVIDER		Section 7.2.2.72
82Ch	PLL_DSP_HSDIVIDER_CLKOUT0		Section 7.2.2.73
830h	PLL_DSP_HSDIVIDER_CLKOUT1		Section 7.2.2.74
834h	PLL_DSP_HSDIVIDER_CLKOUT2		Section 7.2.2.75
838h	PLL_DSP_HSDIVIDER_CLKOUT3		Section 7.2.2.76
83Ch	PLL_PER_PWRCTRL		Section 7.2.2.77
840h	PLL_PER_CLKCTRL		Section 7.2.2.78
844h	PLL_PER_TENABLE		Section 7.2.2.79
848h	PLL_PER_TENABLEDIV		Section 7.2.2.80
84Ch	PLL_PER_M2NDIV		Section 7.2.2.81
850h	PLL_PER_MN2DIV		Section 7.2.2.82
854h	PLL_PER_FRACDIV		Section 7.2.2.83
858h	PLL_PER_BWCTRL		Section 7.2.2.84
85Ch	PLL_PER_FRACCTRL		Section 7.2.2.85
860h	PLL_PER_STATUS		Section 7.2.2.86

Copyright © 2025 Texas Instruments Incorporated

Table 6-3. TOP_RCM Registers (continued)

Offset	Acronym	Register Name	Section
864h	PLL_PER_HSDIVIDER		Section 7.2.2.87
868h	PLL_PER_HSDIVIDER_CLKOUT0		Section 7.2.2.88
86Ch	PLL_PER_HSDIVIDER_CLKOUT1		Section 7.2.2.89
870h	PLL_PER_HSDIVIDER_CLKOUT2		Section 7.2.2.90
874h	PLL_PER_HSDIVIDER_CLKOUT3		Section 7.2.2.91
878h	PLL_DSP_RSTCTRL		Section 7.2.2.92
87Ch	PLL_DSP_HSDIVIDER_RSTCTRL		Section 7.2.2.93
880h	PLL_PER_RSTCTRL		Section 7.2.2.94
884h	PLL_PER_HSDIVIDER_RSTCTRL		Section 7.2.2.95
C00h	ANA_REG_CLK_CTRL_REG1_XO_SLICER		Section 7.2.2.96
C04h	ANA_REG_CLK_CTRL_REG1_CLKTOP		Section 7.2.2.97
C08h	ANA_REG_CLK_CTRL_REG2_CLKTOP		Section 7.2.2.98
C0Ch	ANA_REG_CLK_CTRL_REG1_LDO_CLKTOP		Section 7.2.2.99
C10h	ANA_REG_CLK_CTRL_REG2_LDO_CLKTOP		Section 7.2.2.100
C18h	ANA_REG_CLK_STATUS_REG		Section 7.2.2.101
C1Ch	ANA_REG_REFSYS_CTRL_REG_LOWV		Section 7.2.2.102
C20h	ANA_REG_REFSYS_TMUX_CTRL_LOWV		Section 7.2.2.103
C24h	ANA_REG_REFSYS_SPARE_REG_LOWV	ANA_REG_REFSYS_SPARE_REG_LOWV	Section 7.2.2.104
C28h	ANA_REG_WU_CTRL_REG_LOWV		Section 7.2.2.105
C2Ch	ANA_REG_WU_TMUX_CTRL_LOWV	ANA_REG_WU_TMUX_CTRL_LOWV	Section 7.2.2.106
C30h	ANA_REG_TW_CTRL_REG_LOWV		Section 7.2.2.107
C34h	ANA_REG_TW_ANA_TMUX_CTRL_LOWV		Section 7.2.2.108
C38h	ANA_REG_TW_SPARE_LOWV		Section 7.2.2.109
C3Ch	ANA_REG_WU_MODE_REG_LOWV		Section 7.2.2.110
C40h	ANA_REG_WU_STATUS_REG_LOWV	ANA_REG_WU_STATUS_REG_LOWV	Section 7.2.2.111
C44h	ANA_REG_WU_SPARE_OUT_LOWV		Section 7.2.2.112
FD0h	HW_SPARE_RW0		Section 7.2.2.113
FD4h	HW_SPARE_RW1		Section 7.2.2.114
FD8h	HW_SPARE_RW2		Section 7.2.2.115
FDCh	HW_SPARE_RW3		Section 7.2.2.116
FE0h	HW_SPARE_RO0		Section 7.2.2.117
FE4h	HW_SPARE_RO1		Section 7.2.2.118
FE8h	HW_SPARE_RO2		Section 7.2.2.119
FECh	HW_SPARE_RO3		Section 7.2.2.120
FF0h	HW_SPARE_WPH		Section 7.2.2.121
FF4h	HW_SPARE_REC		Section 7.2.2.122
1008h	LOCK0_KICK0	- KICK0 component	Section 7.2.2.123
100Ch	LOCK0_KICK1	- KICK1 component	Section 7.2.2.124
1010h	intr_raw_status	Interrupt Raw Status/Set Register	Section 7.2.2.125
1014h	intr_enabled_status_clear	Interrupt Enabled Status/Clear register	Section 7.2.2.126
1018h	intr_enable	Interrupt Enable register	Section 7.2.2.127

Copyright © 2025 Texas Instruments Incorporated

Table 6-3. TOP_RCM Registers (continued)

Offset	Acronym	Register Name	Section
101Ch	intr_enable_clear	Interrupt Enable Clear register	Section 7.2.2.128
1020h	eoi	EOI register	Section 7.2.2.129
1024h	fault_address	Fault Address register	Section 7.2.2.130
1028h	fault_type_status	Fault Type Status register	Section 7.2.2.131
102Ch	fault_attr_status	Fault Attribute Status register	Section 7.2.2.132
1030h	fault_clear	Fault Clear register	Section 7.2.2.133

Copyright © 2025 Texas Instruments Incorporated

6.2.2.1 PID Register (Offset = 0h) [reset = 61800213h]

PID is shown in Figure 6-2 and described in Table 6-4.

Return to the Summary Table.

PID register

Figure 6-2. PID Register

31	30	29	28	27	26	25	24
PID_msb16							
R-6180h							
23	22	21	20	19	18	17	16
PID_msb16							
R-6180h							
15	14	13	12	11	10	9	8
PID_misc					PID_major		
R-0h					R-2h		
7	6	5	4	3	2	1	0
PID_custom		PID_minor					
R-0h		R-13h					

Table 6-4. PID Register Field Descriptions

Bit	Field	Type	Reset	Description
31-16	PID_msb16	R	6180h	
15-11	PID_misc	R	0h	
10-8	PID_major	R	2h	
7-6	PID_custom	R	0h	
5-0	PID_minor	R	13h	

Copyright © 2025 Texas Instruments Incorporated

6.2.2.2 HSI_CLK_SRC_SEL Register (Offset = 14h) [reset = X]

HSI_CLK_SRC_SEL is shown in Figure 6-3 and described in Table 6-5.

Return to the Summary Table.

Figure 6-3. HSI_CLK_SRC_SEL Register

31	30	29	28	27	26	25	24	23	22	21	20	19	18	17	16	15	14	13	12	11	10	9	8	7	6	5	4	3	2	1	0
RESERVED																				clksrcsel											
R/W-X																				R/W-555h											

Table 6-5. HSI_CLK_SRC_SEL Register Field Descriptions

Bit	Field	Type	Reset	Description
31-12	RESERVED	R/W	X	
11-0	clksrcsel	R/W	555h	Select line for selecting source clock for HSI. Data should be loaded as multibit. For example: if Clock source 0x5 should be selected then 0x555 should be configured to the register.

Copyright © 2025 Texas Instruments Incorporated

6.2.2.3 CSIRX_CLK_SRC_SEL Register (Offset = 18h) [reset = X]

CSIRX_CLK_SRC_SEL is shown in Figure 6-4 and described in Table 6-6.

Return to the Summary Table.

Figure 6-4. CSIRX_CLK_SRC_SEL Register

31	30	29	28	27	26	25	24	23	22	21	20	19	18	17	16	15	14	13	12	11	10	9	8	7	6	5	4	3	2	1	0
RESERVED																				clksrcsel											
R/W-X																				R/W-0h											

Table 6-6. CSIRX_CLK_SRC_SEL Register Field Descriptions

Bit	Field	Type	Reset	Description
31-12	RESERVED	R/W	X	
11-0	clksrcsel	R/W	0h	Select line for selecting source clock for CSI Rx Data should be loaded as multibit. For example: if Clock source 0x5 should be selected then 0x555 should be configured to the register.

Copyright © 2025 Texas Instruments Incorporated

6.2.2.4 MCUCLKOUT_CLK_SRC_SEL Register (Offset = 1Ch) [reset = X]

MCUCLKOUT_CLK_SRC_SEL is shown in Figure 6-5 and described in Table 6-7.

Return to the Summary Table.

Figure 6-5. MCUCLKOUT_CLK_SRC_SEL Register

31	30	29	28	27	26	25	24	23	22	21	20	19	18	17	16	15	14	13	12	11	10	9	8	7	6	5	4	3	2	1	0
RESERVED																				clksrcsel											
R/W-X																				R/W-0h											

Table 6-7. MCUCLKOUT_CLK_SRC_SEL Register Field Descriptions

Bit	Field	Type	Reset	Description
31-12	RESERVED	R/W	X	
11-0	clksrcsel	R/W	0h	Select line for selecting source clock for MCU Clkout Data should be loaded as multibit. For example: if Clock source 0x5 should be selected then 0x555 should be configured to the register.

Copyright © 2025 Texas Instruments Incorporated

6.2.2.5 PMICCLKOUT_CLK_SRC_SEL Register (Offset = 20h) [reset = X]

PMICCLKOUT_CLK_SRC_SEL is shown in Figure 6-6 and described in Table 6-8.

Return to the Summary Table.

Figure 6-6. PMICCLKOUT_CLK_SRC_SEL Register

31	30	29	28	27	26	25	24	23	22	21	20	19	18	17	16	15	14	13	12	11	10	9	8	7	6	5	4	3	2	1	0
RESERVED																				clksrcsel											
R/W-X																				R/W-0h											

Table 6-8. PMICCLKOUT_CLK_SRC_SEL Register Field Descriptions

Bit	Field	Type	Reset	Description
31-12	RESERVED	R/W	X	
11-0	clksrcsel	R/W	0h	Select line for selecting source clock for PMIC Clkout Data should be loaded as multibit. For example: if Clock source 0x5 should be selected then 0x555 should be configured to the register.

Copyright © 2025 Texas Instruments Incorporated

6.2.2.6 OBSCLKOUT_CLK_SRC_SEL Register (Offset = 24h) [reset = X]

OBSCLKOUT_CLK_SRC_SEL is shown in Figure 6-7 and described in Table 6-9.

Return to the Summary Table.

Figure 6-7. OBSCLKOUT_CLK_SRC_SEL Register

31	30	29	28	27	26	25	24	23	22	21	20	19	18	17	16	15	14	13	12	11	10	9	8	7	6	5	4	3	2	1	0
RESERVED																				clksrcsel											
R/W-X																				R/W-0h											

Table 6-9. OBSCLKOUT_CLK_SRC_SEL Register Field Descriptions

Bit	Field	Type	Reset	Description
31-12	RESERVED	R/W	X	
11-0	clksrcsel	R/W	0h	Select line for selecting source clock for OBS Clkout Data should be loaded as multibit. For example: if Clock source 0x5 should be selected then 0x555 should be configured to the register.

Copyright © 2025 Texas Instruments Incorporated

6.2.2.7 TRCCLKOUT_CLK_SRC_SEL Register (Offset = 28h) [reset = X]

TRCCLKOUT_CLK_SRC_SEL is shown in Figure 6-8 and described in Table 6-10.

Return to the Summary Table.

Figure 6-8. TRCCLKOUT_CLK_SRC_SEL Register

31	30	29	28	27	26	25	24	23	22	21	20	19	18	17	16	15	14	13	12	11	10	9	8	7	6	5	4	3	2	1	0
RESERVED																				clksrcsel											
R/W-X																				R/W-0h											

Table 6-10. TRCCLKOUT_CLK_SRC_SEL Register Field Descriptions

Bit	Field	Type	Reset	Description
31-12	RESERVED	R/W	X	
11-0	clksrcsel	R/W	0h	Select line for selecting source clock for TRC Clkout Data should be loaded as multibit. For example: if Clock source 0x5 should be selected then 0x555 should be configured to the register.

Copyright © 2025 Texas Instruments Incorporated

6.2.2.8 HSI_DIV_VAL Register (Offset = 40h) [reset = X]

HSI_DIV_VAL is shown in Figure 6-9 and described in Table 6-11.

Return to the Summary Table.

Figure 6-9. HSI_DIV_VAL Register

31	30	29	28	27	26	25	24	23	22	21	20	19	18	17	16	15	14	13	12	11	10	9	8	7	6	5	4	3	2	1	0
RESERVED																				clkdiv											
R/W-X																				R/W-0h											

Table 6-11. HSI_DIV_VAL Register Field Descriptions

Bit	Field	Type	Reset	Description
31-12	RESERVED	R/W	X	
11-0	clkdiv	R/W	0h	Divider value for HSI selected clock. Data should be loaded as multibit. For example: if divider value of 0x5 should be selected then 0x555 should be configured to the register.

Copyright © 2025 Texas Instruments Incorporated

6.2.2.9 CSIRX_DIV_VAL Register (Offset = 44h) [reset = X]

CSIRX_DIV_VAL is shown in Figure 6-10 and described in Table 6-12.

Return to the Summary Table.

Figure 6-10. CSIRX_DIV_VAL Register

31	30	29	28	27	26	25	24	23	22	21	20	19	18	17	16	15	14	13	12	11	10	9	8	7	6	5	4	3	2	1	0
RESERVED																				clkdiv											
R/W-X																				R/W-0h											

Table 6-12. CSIRX_DIV_VAL Register Field Descriptions

Bit	Field	Type	Reset	Description
31-12	RESERVED	R/W	X	
11-0	clkdiv	R/W	0h	Divider value for CSI Rx selected clock. Data should be loaded as multibit. For example: if divider value of 0x5 should be selected then 0x555 should be configured to the register.

Copyright © 2025 Texas Instruments Incorporated

6.2.2.10 MCUCLKOUT_DIV_VAL Register (Offset = 48h) [reset = X]

MCUCLKOUT_DIV_VAL is shown in Figure 6-11 and described in Table 6-13.

Return to the Summary Table.

Figure 6-11. MCUCLKOUT_DIV_VAL Register

31	30	29	28	27	26	25	24	23	22	21	20	19	18	17	16	15	14	13	12	11	10	9	8	7	6	5	4	3	2	1	0
RESERVED																				clkdiv											
R/W-X																				R/W-0h											

Table 6-13. MCUCLKOUT_DIV_VAL Register Field Descriptions

Bit	Field	Type	Reset	Description
31-12	RESERVED	R/W	X	
11-0	clkdiv	R/W	0h	Divider value for MCU Clkout selected clock. Data should be loaded as multibit. For example: if divider value of 0x5 should be selected then 0x555 should be configured to the register.

Copyright © 2025 Texas Instruments Incorporated

6.2.2.11 PMICCLKOUT_DIV_VAL Register (Offset = 4Ch) [reset = X]

PMICCLKOUT_DIV_VAL is shown in Figure 6-12 and described in Table 6-14.

Return to the Summary Table.

Figure 6-12. PMICCLKOUT_DIV_VAL Register

31	30	29	28	27	26	25	24	23	22	21	20	19	18	17	16	15	14	13	12	11	10	9	8	7	6	5	4	3	2	1	0
RESERVED																				clkdiv											
R/W-X																				R/W-0h											

Table 6-14. PMICCLKOUT_DIV_VAL Register Field Descriptions

Bit	Field	Type	Reset	Description
31-12	RESERVED	R/W	X	
11-0	clkdiv	R/W	0h	Divider value for PMIC Clkout selected clock. Data should be loaded as multibit. For example: if divider value of 0x5 should be selected then 0x555 should be configured to the register.

Copyright © 2025 Texas Instruments Incorporated

6.2.2.12 OBSCLKOUT_DIV_VAL Register (Offset = 50h) [reset = X]

OBSCLKOUT_DIV_VAL is shown in Figure 6-13 and described in Table 6-15.

Return to the Summary Table.

Figure 6-13. OBSCLKOUT_DIV_VAL Register

31	30	29	28	27	26	25	24	23	22	21	20	19	18	17	16	15	14	13	12	11	10	9	8	7	6	5	4	3	2	1	0
RESERVED																				clkdiv											
R/W-X																				R/W-0h											

Table 6-15. OBSCLKOUT_DIV_VAL Register Field Descriptions

Bit	Field	Type	Reset	Description
31-12	RESERVED	R/W	X	
11-0	clkdiv	R/W	0h	Divider value for OBS Clkout selected clock. Data should be loaded as multibit. For example: if divider value of 0x5 should be selected then 0x555 should be configured to the register.

Copyright © 2025 Texas Instruments Incorporated

6.2.2.13 TRCCLKOUT_DIV_VAL Register (Offset = 54h) [reset = X]

TRCCLKOUT_DIV_VAL is shown in Figure 6-14 and described in Table 6-16.

Return to the Summary Table.

Figure 6-14. TRCCLKOUT_DIV_VAL Register

31	30	29	28	27	26	25	24	23	22	21	20	19	18	17	16	15	14	13	12	11	10	9	8	7	6	5	4	3	2	1	0
RESERVED																				clkdiv											
R/W-X																				R/W-0h											

Table 6-16. TRCCLKOUT_DIV_VAL Register Field Descriptions

Bit	Field	Type	Reset	Description
31-12	RESERVED	R/W	X	
11-0	clkdiv	R/W	0h	Divider value for TRC Clkout selected clock. Data should be loaded as multibit. For example: if divider value of 0x5 should be selected then 0x555 should be configured to the register.

Copyright © 2025 Texas Instruments Incorporated

6.2.2.14 HSI_CLK_GATE Register (Offset = 80h) [reset = X]

HSI_CLK_GATE is shown in Figure 6-15 and described in Table 6-17.

Return to the Summary Table.

Figure 6-15. HSI_CLK_GATE Register

31	30	29	28	27	26	25	24	23	22	21	20	19	18	17	16
RESERVED															
R/W-X															
15	14	13	12	11	10	9	8	7	6	5	4	3	2	1	0
RESERVED													gated		
R/W-X													R/W-0h		

Table 6-17. HSI_CLK_GATE Register Field Descriptions

Bit	Field	Type	Reset	Description
31-3	RESERVED	R/W	X	
2-0	gated	R/W	0h	Clock gating config for HSI. Data should be loaded as multibit. Write 3'b000 : Clock is ungated (multibit 000) Write 3'b111 : Clock is gated (multibit 111)

Copyright © 2025 Texas Instruments Incorporated

6.2.2.15 CSIRX_CLK_GATE Register (Offset = 84h) [reset = X]

CSIRX_CLK_GATE is shown in Figure 6-16 and described in Table 6-18.

Return to the Summary Table.

Figure 6-16. CSIRX_CLK_GATE Register

31	30	29	28	27	26	25	24	23	22	21	20	19	18	17	16
RESERVED															
R/W-X															
15	14	13	12	11	10	9	8	7	6	5	4	3	2	1	0
RESERVED													gated		
R/W-X													R/W-0h		

Table 6-18. CSIRX_CLK_GATE Register Field Descriptions

Bit	Field	Type	Reset	Description
31-3	RESERVED	R/W	X	
2-0	gated	R/W	0h	Clock gating config for CSI Rx. Data should be loaded as multibit. Write 3'b000 : Clock is ungated (multibit 000) Write 3'b111 : Clock is gated (multibit 111)

Copyright © 2025 Texas Instruments Incorporated

6.2.2.16 MCUCLKOUT_CLK_GATE Register (Offset = 88h) [reset = X]

MCUCLKOUT_CLK_GATE is shown in Figure 6-17 and described in Table 6-19.

Return to the Summary Table.

Figure 6-17. MCUCLKOUT_CLK_GATE Register

31	30	29	28	27	26	25	24	23	22	21	20	19	18	17	16
RESERVED															
R/W-X															
15	14	13	12	11	10	9	8	7	6	5	4	3	2	1	0
RESERVED													gated		
R/W-X													R/W-7h		

Table 6-19. MCUCLKOUT_CLK_GATE Register Field Descriptions

Bit	Field	Type	Reset	Description
31-3	RESERVED	R/W	X	
2-0	gated	R/W	7h	Clock gating config for MCU Clkout. Data should be loaded as multibit. Write 3'b000 : Clock is ungated (multibit 000) Write 3'b111 : Clock is gated (multibit 111)

Copyright © 2025 Texas Instruments Incorporated

6.2.2.17 PMICCLKOUT_CLK_GATE Register (Offset = 8Ch) [reset = X]

PMICCLKOUT_CLK_GATE is shown in Figure 6-18 and described in Table 6-20.

Return to the Summary Table.

Figure 6-18. PMICCLKOUT_CLK_GATE Register

31	30	29	28	27	26	25	24	23	22	21	20	19	18	17	16
RESERVED															
R/W-X															
15	14	13	12	11	10	9	8	7	6	5	4	3	2	1	0
RESERVED													gated		
R/W-X													R/W-7h		

Table 6-20. PMICCLKOUT_CLK_GATE Register Field Descriptions

Bit	Field	Type	Reset	Description
31-3	RESERVED	R/W	X	
2-0	gated	R/W	7h	Clock gating config for PMIC Clkout Data should be loaded as multibit. Write 3'b000 : Clock is ungated (multibit 000) Write 3'b111 : Clock is gated (multibit 111)

Copyright © 2025 Texas Instruments Incorporated

6.2.2.18 OBSCLKOUT_CLK_GATE Register (Offset = 90h) [reset = X]

OBSCLKOUT_CLK_GATE is shown in Figure 6-19 and described in Table 6-21.

Return to the Summary Table.

Figure 6-19. OBSCLKOUT_CLK_GATE Register

31	30	29	28	27	26	25	24	23	22	21	20	19	18	17	16
RESERVED															
R/W-X															
15	14	13	12	11	10	9	8	7	6	5	4	3	2	1	0
RESERVED													gated		
R/W-X													R/W-0h		

Table 6-21. OBSCLKOUT_CLK_GATE Register Field Descriptions

Bit	Field	Type	Reset	Description
31-3	RESERVED	R/W	X	
2-0	gated	R/W	0h	Clock gating config for OBS Clkout Data should be loaded as multibit. Write 3'b000 : Clock is ungated (multibit 000) Write 3'b111 : Clock is gated (multibit 111)

Copyright © 2025 Texas Instruments Incorporated

6.2.2.19 TRCCLKOUT_CLK_GATE Register (Offset = 94h) [reset = X]

TRCCLKOUT_CLK_GATE is shown in Figure 6-20 and described in Table 6-22.

Return to the Summary Table.

Figure 6-20. TRCCLKOUT_CLK_GATE Register

31	30	29	28	27	26	25	24	23	22	21	20	19	18	17	16
RESERVED															
R/W-X															
15	14	13	12	11	10	9	8	7	6	5	4	3	2	1	0
RESERVED													gated		
R/W-X													R/W-0h		

Table 6-22. TRCCLKOUT_CLK_GATE Register Field Descriptions

Bit	Field	Type	Reset	Description
31-3	RESERVED	R/W	X	
2-0	gated	R/W	0h	Clock gating config for TRC Clkout Data should be loaded as multibit. Write 3'b000 : Clock is ungated (multibit 000) Write 3'b111 : Clock is gated (multibit 111)

Copyright © 2025 Texas Instruments Incorporated

6.2.2.20 DSS_CLK_GATE Register (Offset = 98h) [reset = X]

DSS_CLK_GATE is shown in Figure 6-21 and described in Table 6-23.

Return to the Summary Table.

Figure 6-21. DSS_CLK_GATE Register

31	30	29	28	27	26	25	24	23	22	21	20	19	18	17	16
RESERVED															
R/W-X															
15	14	13	12	11	10	9	8	7	6	5	4	3	2	1	0
RESERVED													gated		
R/W-X													R/W-0h		

Table 6-23. DSS_CLK_GATE Register Field Descriptions

Bit	Field	Type	Reset	Description
31-3	RESERVED	R/W	X	
2-0	gated	R/W	0h	Clock gating config for DSP Subsystem System Clock Data should be loaded as multibit. Write 3'b000 : Clock is ungated (multibit 000) Write 3'b111 : Clock is gated (multibit 111)

Copyright © 2025 Texas Instruments Incorporated

6.2.2.21 HSI_CLK_STATUS Register (Offset = C0h) [reset = X]

HSI_CLK_STATUS is shown in Figure 6-22 and described in Table 6-24.

Return to the Summary Table.

Figure 6-22. HSI_CLK_STATUS Register

31	30	29	28	27	26	25	24	23	22	21	20	19	18	17	16
RESERVED															
R-X															
15	14	13	12	11	10	9	8	7	6	5	4	3	2	1	0
currdivider								clkinuse							
R-0h								R-1h							

Table 6-24. HSI_CLK_STATUS Register Field Descriptions

Bit	Field	Type	Reset	Description
31-16	RESERVED	R	X	
15-8	currdivider	R	0h	Status shows the current divider value chosen for CortexR5 Clock
7-0	clkinuse	R	1h	Status shows the source clock slected for CortexR5 Clock

Copyright © 2025 Texas Instruments Incorporated

6.2.2.22 CSIRX_CLK_STATUS Register (Offset = C4h) [reset = X]

CSIRX_CLK_STATUS is shown in Figure 6-23 and described in Table 6-25.

Return to the Summary Table.

Figure 6-23. CSIRX_CLK_STATUS Register

31	30	29	28	27	26	25	24	23	22	21	20	19	18	17	16
RESERVED															
R-X															
15	14	13	12	11	10	9	8	7	6	5	4	3	2	1	0
currdivider								clkinuse							
R-0h								R-1h							

Table 6-25. CSIRX_CLK_STATUS Register Field Descriptions

Bit	Field	Type	Reset	Description
31-16	RESERVED	R	X	
15-8	currdivider	R	0h	Status shows the current divider value chosen for HSI Clock
7-0	clkinuse	R	1h	Status shows the source clock slected for HSI Clock

Copyright © 2025 Texas Instruments Incorporated

6.2.2.23 MCUCLKOUT_CLK_STATUS Register (Offset = C8h) [reset = X]

MCUCLKOUT_CLK_STATUS is shown in Figure 6-24 and described in Table 6-26.

Return to the Summary Table.

Figure 6-24. MCUCLKOUT_CLK_STATUS Register

31	30	29	28	27	26	25	24	23	22	21	20	19	18	17	16
RESERVED															
R-X															
15	14	13	12	11	10	9	8	7	6	5	4	3	2	1	0
currdivider								clkinuse							
R-0h								R-1h							

Table 6-26. MCUCLKOUT_CLK_STATUS Register Field Descriptions

Bit	Field	Type	Reset	Description
31-16	RESERVED	R	X	
15-8	currdivider	R	0h	Status shows the current divider value chosen for CSI Rx Clock
7-0	clkinuse	R	1h	Status shows the source clock slected for CSI Rx Clock

Copyright © 2025 Texas Instruments Incorporated

6.2.2.24 PMICCLKOUT_CLK_STATUS Register (Offset = CCh) [reset = X]

PMICCLKOUT_CLK_STATUS is shown in Figure 6-25 and described in Table 6-27.

Return to the Summary Table.

Figure 6-25. PMICCLKOUT_CLK_STATUS Register

31	30	29	28	27	26	25	24	23	22	21	20	19	18	17	16
RESERVED															
R-X															
15	14	13	12	11	10	9	8	7	6	5	4	3	2	1	0
currdivider								clkinuse							
R-0h								R-1h							

Table 6-27. PMICCLKOUT_CLK_STATUS Register Field Descriptions

Bit	Field	Type	Reset	Description
31-16	RESERVED	R	X	
15-8	currdivider	R	0h	Status shows the current divider value chosen for MCU Clkout Clock
7-0	clkinuse	R	1h	Status shows the source clock slected for MCU Clkout Clock

Copyright © 2025 Texas Instruments Incorporated

6.2.2.25 OBSCLKOUT_CLK_STATUS Register (Offset = D0h) [reset = X]

OBSCLKOUT_CLK_STATUS is shown in Figure 6-26 and described in Table 6-28.

Return to the Summary Table.

Figure 6-26. OBSCLKOUT_CLK_STATUS Register

31	30	29	28	27	26	25	24	23	22	21	20	19	18	17	16
RESERVED															
R-X															
15	14	13	12	11	10	9	8	7	6	5	4	3	2	1	0
currdivider								clkinuse							
R-0h								R-1h							

Table 6-28. OBSCLKOUT_CLK_STATUS Register Field Descriptions

Bit	Field	Type	Reset	Description
31-16	RESERVED	R	X	
15-8	currdivider	R	0h	Status shows the current divider value chosen for PMIC Clkout Clock
7-0	clkinuse	R	1h	Status shows the source clock slected for PMIC Clkout Clock

Copyright © 2025 Texas Instruments Incorporated

6.2.2.26 TRCCLKOUT_CLK_STATUS Register (Offset = D4h) [reset = X]

TRCCLKOUT_CLK_STATUS is shown in Figure 6-27 and described in Table 6-29.

Return to the Summary Table.

Figure 6-27. TRCCLKOUT_CLK_STATUS Register

31	30	29	28	27	26	25	24	23	22	21	20	19	18	17	16
RESERVED															
R-X															
15	14	13	12	11	10	9	8	7	6	5	4	3	2	1	0
currdivider								clkinuse							
R-0h								R-1h							

Table 6-29. TRCCLKOUT_CLK_STATUS Register Field Descriptions

Bit	Field	Type	Reset	Description
31-16	RESERVED	R	X	
15-8	currdivider	R	0h	Status shows the current divider value chosen for PMIC Clkout Clock
7-0	clkinuse	R	1h	Status shows the source clock slected for PMIC Clkout Clock

Copyright © 2025 Texas Instruments Incorporated

6.2.2.27 WARM_RESET_CONFIG Register (Offset = 100h) [reset = X]

WARM_RESET_CONFIG is shown in Figure 6-28 and described in Table 6-30.

Return to the Summary Table.

Figure 6-28. WARM_RESET_CONFIG Register

31	30	29	28	27	26	25	24
RESERVED							
R/W-X							
23	22	21	20	19	18	17	16
RESERVED					wdog_rst_en		
R/W-X					R/W-7h		
15	14	13	12	11	10	9	8
RESERVED					sw_rst		
R/W-X					R/W-7h		
7	6	5	4	3	2	1	0
RESERVED							
R/W-X					R/W-7h		

Table 6-30. WARM_RESET_CONFIG Register Field Descriptions

Bit	Field	Type	Reset	Description
31-19	RESERVED	R/W	X	
18-16	wdog_rst_en	R/W	7h	Data should be loaded as multibit. Write 3'b000 to disable MSS Watchdog control on Warm reset Write 3'b111 enable MSS Watchdog to control Warm reset
15-11	RESERVED	R/W	X	
10-8	sw_rst	R/W	7h	Data should be loaded as multibit. Write 3'b000 to assert warm reset from SW Write 3'b111 to deassert warm reset from SW if this is the only source of warm reset
7-3	RESERVED	R/W	X	

Copyright © 2025 Texas Instruments Incorporated

6.2.2.28 SYS_RST_CAUSE Register (Offset = 104h) [reset = X]

SYS_RST_CAUSE is shown in Figure 6-29 and described in Table 6-31.

Return to the Summary Table.

Figure 6-29. SYS_RST_CAUSE Register

31	30	29	28	27	26	25	24	23	22	21	20	19	18	17	16	15	14	13	12	11	10	9	8	7	6	5	4	3	2	1	0
RESERVED																											cause				
R-X																											R-0h				

Table 6-31. SYS_RST_CAUSE Register Field Descriptions

Bit	Field	Type	Reset	Description
31-5	RESERVED	R	X	
4-0	cause	R	0h	System Reset Cause register 5'b01001 - POR reset 5'b01010 - Warm reset due to MSS_WDT 5'b01100 - Warm reset due to TOP_RMC:WARM_RESET_CONFIG 5'b01000 - External Pad reset 5'b11000 - Warm reset due to HSM_WDT

Copyright © 2025 Texas Instruments Incorporated

6.2.2.29 SYS_RST_CAUSE_CLR Register (Offset = 108h) [reset = X]

SYS_RST_CAUSE_CLR is shown in Figure 6-30 and described in Table 6-32.

Return to the Summary Table.

Figure 6-30. SYS_RST_CAUSE_CLR Register

31	30	29	28	27	26	25	24
RESERVED							
R/W-X							
23	22	21	20	19	18	17	16
RESERVED							
R/W-X							
15	14	13	12	11	10	9	8
RESERVED							
R/W-X							
7	6	5	4	3	2	1	0
RESERVED							clear
R/W-X							R/W-0h

Table 6-32. SYS_RST_CAUSE_CLR Register Field Descriptions

Bit	Field	Type	Reset	Description
31-1	RESERVED	R/W	X	
0	clear	R/W	0h	Write pulse bit field: System Reset Cause register Clear

Copyright © 2025 Texas Instruments Incorporated

6.2.2.30 DSS_RST_CTRL Register (Offset = 10Ch) [reset = X]

DSS_RST_CTRL is shown in Figure 6-31 and described in Table 6-33.

Return to the Summary Table.

Figure 6-31. DSS_RST_CTRL Register

31	30	29	28	27	26	25	24	23	22	21	20	19	18	17	16
RESERVED															
R/W-X															
15	14	13	12	11	10	9	8	7	6	5	4	3	2	1	0
RESERVED													assert		
R/W-X													R/W-0h		

Table 6-33. DSS_RST_CTRL Register Field Descriptions

Bit	Field	Type	Reset	Description
31-3	RESERVED	R/W	X	
2-0	assert	R/W	0h	Reset control for DSP Subsystem Data should be loaded as multibit. Write 3'b000: Reset is not asserted by SW (multibit 000) Write 3'b111 : Reset is asserted by SW (multibit 111)

Copyright © 2025 Texas Instruments Incorporated

6.2.2.31 RS232_BITINTERVAL Register (Offset = 204h) [reset = 6C815D5Bh]

RS232_BITINTERVAL is shown in Figure 6-32 and described in Table 6-34.

Return to the Summary Table.

Figure 6-32. RS232_BITINTERVAL Register

31	30	29	28	27	26	25	24	23	22	21	20	19	18	17	16	15	14	13	12	11	10	9	8	7	6	5	4	3	2	1	0
bitinterval																															
R/W-6C815D5Bh																															

Table 6-34. RS232_BITINTERVAL Register Field Descriptions

Bit	Field	Type	Reset	Description
31-0	bitinterval	R/W	6C815D5Bh	RS232 Bit Interval. 10 bit clock interval is selceted based on the value of MSS_CR5_CLK_SRC_SEL [9:0] used as RS232 Bit inteval when MSS_CR5_CLK_SRC_SEL = 0x0 [19:10] used as RS232 Bit inteval when MSS_CR5_CLK_SRC_SEL = 0x1 [29:20] used as RS232 Bit inteval when MSS_CR5_CLK_SRC_SEL = 0x2

Copyright © 2025 Texas Instruments Incorporated

6.2.2.32 LVDS_PAD_CTRL0 Register (Offset = 208h) [reset = 01010101h]

LVDS_PAD_CTRL0 is shown in Figure 6-33 and described in Table 6-35.

Return to the Summary Table.

Figure 6-33. LVDS_PAD_CTRL0 Register

31	30	29	28	27	26	25	24	23	22	21	20	19	18	17	16	15	14	13	12	11	10	9	8	7	6	5	4	3	2	1	0
ctrl																															
R/W-01010101h																															

Table 6-35. LVDS_PAD_CTRL0 Register Field Descriptions

Bit	Field	Type	Reset	Description
31-0	ctrl	R/W	01010101h	LVDS Pad Control 0 Register. Below is the mapping for each bit. Refer the LVDS IO Spec for more details Bit 0 : Power Down Control for LVDS CLK Lane Bit 1: LOPWRA Control for i LVDS CLK Lane Bit 2: LOPWRB Control for LVDS CLK Lane Bit 3 : LPSEL Control for LVDS CLK Lane Bit 4 : SUB_LVDS_EN Control for LVDS CLK Lane Bit 5 : HIZ_DISABLE Control for LVDS CLK Lane Bit 6 : EXT_RES_EN Control for LVDS CLK Lane Bit 7 : Reserved Bit 8 : Power Down Control for LVDS DATA Lane 0 Bit 9: LOPWRA Control for i LVDS DATA Lane 0 Bit 10: LOPWRB Control for LVDS DATA Lane 0 Bit 11: LPSEL Control for LVDS DATA Lane 0 Bit 12: SUB_LVDS_EN Control for LVDS DATA Lane 0 Bit 13: HIZ_DISABLE Control for LVDS DATA Lane 0 Bit 14: EXT_RES_EN Control for LVDS DATA Lane 0 Bit 15: Reserved Bit 16 : Power Down Control for LVDS DATA Lane 1 Bit 17: LOPWRA Control for i LVDS DATA Lane 1 Bit 18: LOPWRB Control for LVDS DATA Lane 1 Bit 19: LPSEL Control for LVDS DATA Lane 1 Bit 20: SUB_LVDS_EN Control for LVDS DATA Lane 1 Bit 21: HIZ_DISABLE Control for LVDS DATA Lane 1 Bit 22: EXT_RES_EN Control for LVDS DATA Lane 1 Bit 23: Reserved Bit 24 : Power Down Control for LVDS DATA Lane 2 Bit 25: LOPWRA Control for i LVDS DATA Lane 2 Bit 26: LOPWRB Control for LVDS DATA Lane 2 Bit 27: LPSEL Control for LVDS DATA Lane 2 Bit 28: SUB_LVDS_EN Control for LVDS DATA Lane 2 Bit 29: HIZ_DISABLE Control for LVDS DATA Lane 2 Bit 30: EXT_RES_EN Control for LVDS DATA Lane 2 Bit 31: Reserved

Copyright © 2025 Texas Instruments Incorporated

6.2.2.33 LVDS_PAD_CTRL1 Register (Offset = 20Ch) [reset = 101h]

LVDS_PAD_CTRL1 is shown in Figure 6-34 and described in Table 6-36.

Return to the Summary Table.

Figure 6-34. LVDS_PAD_CTRL1 Register

31	30	29	28	27	26	25	24	23	22	21	20	19	18	17	16	15	14	13	12	11	10	9	8	7	6	5	4	3	2	1	0
ctlr																															
R/W-101h																															

Table 6-36. LVDS_PAD_CTRL1 Register Field Descriptions

Bit	Field	Type	Reset	Description
31-0	ctlr	R/W	101h	LVDS Pad Control 1 Register. Below is the mapping for each bit. Refer the LVDS IO Spec for more details Bit 0 : Power Down Control for LVDS DATA Lane 0 Bit 1: LOPWRA Control for i LVDS DATA Lane 0 Bit 2: LOPWRB Control for LVDS DATA Lane 0 Bit 3: LPSEL Control for LVDS DATA Lane 0 Bit 4: SUB_LVDS_EN Control for LVDS DATA Lane 0 Bit 5: HIZ_DISABLE Control for LVDS DATA Lane 0 Bit 6: EXT_RES_EN Control for LVDS DATA Lane 0 Bit 7: Reserved Bit 8 : Power Down Control for LVDS FRME CLK Lane Bit 9 : LOPWRA Control for i LVDS FRAME CLK Lane Bit 10: LOPWRB Control for LVDS FRAME CLK Lane Bit 11 : LPSEL Control for LVDS FRAME CLK Lane Bit 12 : SUB_LVDS_EN Control for LVDS FRAME CLK Lane Bit 13 : HIZ_DISABLE Control for LVDS FRAME CLK Lane Bit 14 : EXT_RES_EN Control for LVDS FRAME CLK Lane Bit 15 -23: Reserved Bit 24 : Power Down Control for LVDS Bias cell Bit 25 : eEfuse Set Control for LVDS Bias cell

Copyright © 2025 Texas Instruments Incorporated

6.2.2.34 LIMP_MODE_EN Register (Offset = 218h) [reset = X]

LIMP_MODE_EN is shown in Figure 6-35 and described in Table 6-37.

Return to the Summary Table.

Figure 6-35. LIMP_MODE_EN Register

31	30	29	28	27	26	25	24
RESERVED							
R/W-X							
23	22	21	20	19	18	17	16
RESERVED							
R/W-X							
15	14	13	12	11	10	9	8
RESERVED					force_rcclk_en		
R/W-X					R/W-0h		
7	6	5	4	3	2	1	0
RESERVED	ccca_en			RESERVED	dcca_en		
R/W-X	R/W-0h			R/W-X	R/W-0h		

Table 6-37. LIMP_MODE_EN Register Field Descriptions

Bit	Field	Type	Reset	Description
31-11	RESERVED	R/W	X	
10-8	force_rcclk_en	R/W	0h	Force the RCCLK on when limp mode is detected 3'b000: The RCCLK will not be forced on when limp mode is detected (multibit 000) 3'b111 : The RCCLK will be forced on when limp mode is detected (multibit 111)
7	RESERVED	R/W	X	
6-4	ccca_en	R/W	0h	Enable MSS_CCCA Error to generate Limp mode 3'b000: MSS_CCCA Error will not generate Limp mode (multibit 000) 3'b111 : MSS_CCCA Error will generate Limp mode (multibit 111)
3	RESERVED	R/W	X	
2-0	dcca_en	R/W	0h	Enable MSS_DCCA Error to generate Limp mode 3'b000: MSS_DCCA Error will not generate Limp mode (multibit 000) 3'b111 : MSS_DCCA Error will generate Limp mode (multibit 111)

Copyright © 2025 Texas Instruments Incorporated

6.2.2.35 PMICCLKOUT_DCDC_CTRL Register (Offset = 21Ch) [reset = X]

PMICCLKOUT_DCDC_CTRL is shown in Figure 6-36 and described in Table 6-38.

Return to the Summary Table.

Figure 6-36. PMICCLKOUT_DCDC_CTRL Register

31	30	29	28	27	26	25	24
RESERVED							
R/W-X							
23	22	21	20	19	18	17	16
max_freq_thr							
R/W-0h							
15	14	13	12	11	10	9	8
min_freq_thr							
R/W-0h							
7	6	5	4	3	2	1	0
RESERVED	reset_assert			RESERVED	freq_acc_mode	dither_en	dcdc_clk_en
R/W-X	R/W-0h			R/W-X	R/W-0h	R/W-0h	R/W-0h

Table 6-38. PMICCLKOUT_DCDC_CTRL Register Field Descriptions

Bit	Field	Type	Reset	Description
31-24	RESERVED	R/W	X	
23-16	max_freq_thr	R/W	0h	PMIC Clockout DCDC Maximum Frequency Threshold
15-8	min_freq_thr	R/W	0h	PMIC Clockout DCDC Minimum Frequency Threshold
7	RESERVED	R/W	X	
6-4	reset_assert	R/W	0h	Reset control for PMIC DCDC Data should be loaded as multibit. Write 3'b000: Reset is not asserted by SW (multibit 000) Write 3'b111 : Reset is asserted by SW (multibit 111)
3	RESERVED	R/W	X	
2	freq_acc_mode	R/W	0h	PMIC Clockout DCDC Freq Acc Enable
1	dither_en	R/W	0h	PMIC Clockout DCDC Clock Dither Enable
0	dcdc_clk_en	R/W	0h	PMIC Clockout DCDC Clock Enable

Copyright © 2025 Texas Instruments Incorporated

6.2.2.36 PMICCLKOUT_DCDC_SLOPE Register (Offset = 220h) [reset = X]

PMICCLKOUT_DCDC_SLOPE is shown in Figure 6-37 and described in Table 6-39.

Return to the Summary Table.

Figure 6-37. PMICCLKOUT_DCDC_SLOPE Register

31	30	29	28	27	26	25	24	23	22	21	20	19	18	17	16	15	14	13	12	11	10	9	8	7	6	5	4	3	2	1	0
RESERVED					slope_val																										
R/W-X					R/W-0h																										

Table 6-39. PMICCLKOUT_DCDC_SLOPE Register Field Descriptions

Bit	Field	Type	Reset	Description
31-27	RESERVED	R/W	X	
26-0	slope_val	R/W	0h	PMIC Clockout DCDC Slope Config Value

Copyright © 2025 Texas Instruments Incorporated

6.2.2.37 RCOSC32K_CTRL Register (Offset = 224h) [reset = X]

RCOSC32K_CTRL is shown in Figure 6-38 and described in Table 6-40.

Return to the Summary Table.

Figure 6-38. RCOSC32K_CTRL Register

31	30	29	28	27	26	25	24	23	22	21	20	19	18	17	16
RESERVED															
R/W-X															
15	14	13	12	11	10	9	8	7	6	5	4	3	2	1	0
RESERVED													stoposc		
R/W-X													R/W-0h		

Table 6-40. RCOSC32K_CTRL Register Field Descriptions

Bit	Field	Type	Reset	Description
31-3	RESERVED	R/W	X	
2-0	stoposc	R/W	0h	Stop 32KHz RCOSC. Write 3'b111 to stop clock

Copyright © 2025 Texas Instruments Incorporated

6.2.2.38 PLL_CORE_PWRCTRL Register (Offset = 400h) [reset = X]

PLL_CORE_PWRCTRL is shown in Figure 6-39 and described in Table 6-41.

Return to the Summary Table.

Figure 6-39. PLL_CORE_PWRCTRL Register

31	30	29	28	27	26	25	24
RESERVED							
R/W-X							
23	22	21	20	19	18	17	16
RESERVED							
R/W-X							
15	14	13	12	11	10	9	8
RESERVED							
R/W-X							
7	6	5	4	3	2	1	0
RESERVED		PONIN	PGOODIN	RET	ISORET	ISOSCAN	OFFMODE
R/W-X		R/W-1h	R/W-1h	R/W-0h	R/W-0h	R/W-0h	R/W-0h

Table 6-41. PLL_CORE_PWRCTRL Register Field Descriptions

Bit	Field	Type	Reset	Description
31-6	RESERVED	R/W	X	
5	PONIN	R/W	1h	ON/OFF control of the weak power switch digital. For functional mode it should be 1
4	PGOODIN	R/W	1h	ON/OFF control of the strong power switch digital. For functional mode it should be 1
3	RET	R/W	0h	Save/Restore control for Retention mode. For functional mode it should be 0
2	ISORET	R/W	0h	Save/Restore control for Isolation of output pins For functional mode it should be 0
1	ISOSCAN	R/W	0h	Save/Restore control for Isolation of the Scanout pins. For functional mode it should be 0
0	OFFMODE	R/W	0h	Used to switch OFF the logic on VDDA. For functional mode it should be 0

Copyright © 2025 Texas Instruments Incorporated

6.2.2.39 PLL_CORE_CLKCTRL Register (Offset = 404h) [reset = X]

PLL_CORE_CLKCTRL is shown in Figure 6-40 and described in Table 6-42.

Return to the Summary Table.

Figure 6-40. PLL_CORE_CLKCTRL Register

31	30	29	28	27	26	25	24
CYCLESLIPEN	ENSSC	CLKDCOLDOEN	NWELLTRIM				
R/W-0h	R/W-0h	R/W-0h	R/W-9h				
23	22	21	20	19	18	17	16
IDLE	BYPASSACKZ	STBYRET	CLKOUTEN	CLKOUTLDOEN	ULOWCLKEN	CLKDCOLDOPWDNZ	M2PWDNZ
R/W-1h	R/W-0h	R/W-0h	R/W-1h	R-0h	R/W-0h	R/W-0h	R/W-1h
15	14	13	12	11	10	9	8
RESERVED	STOPMODE	RESERVED	SELFREQDCO			RESERVED	RELAXED_LOCK
R/W-X	R/W-1h	R/W-X	R/W-2h			R/W-X	R/W-0h
7	6	5	4	3	2	1	0
RESERVED						SSCTYPE	TINTZ
R/W-X						R/W-0h	R/W-0h

Table 6-42. PLL_CORE_CLKCTRL Register Field Descriptions

Bit	Field	Type	Reset	Description
31	CYCLESLIPEN	R/W	0h	FailSafe enable to trigger re-calibration in case CycleSlip occurs between REFCLK and FBCLK.
30	ENSSC	R/W	0h	Controls Clock Spreading. SSC is not supported. Should be set to 0x0 to disable clock spreading.
29	CLKDCOLDOEN	R/W	0h	Synchronously enables/disables CLKDCOLDO 0x0 : synchronously disables CLKDCOLDO 0x1 : synchronously enables CLKDCOLDO
28-24	NWELLTRIM	R/W	9h	Trim value for the PLL
23	IDLE	R/W	1h	Sets PLL to Idle mode 0x0 : When SYSRESET = 0 and TINITZ = 1 IDLE = 0 PLL will go to Active and Locked 0x1 : When SYSRESET = 0 and TINITZ = 1 IDLE = 1 PLL will go to Idle Bypass low powe
22	BYPASSACKZ	R/W	0h	BYPASSACKZ is a special purpose input to the module. In general this input is expected to be tied to static low. For the output clocks of the module that do not have an internal bypass mux viz. CLKDCOLDO and CLKOUTLDO, a bypass mux could be implemented external to the module.
21	STBYRET	R/W	0h	Standby retention control 0x0 : prepares ADPLLLJ for relock when out of retention by removing the gating on all internal clocks. 0x1 : prepares ADPLLLJ for retention by gating all the internal clocks.
20	CLKOUTEN	R/W	1h	CLKOUT enable or disable 0x0 : synchronously disables CLKOUT 0x1 : synchronously enables CLKOUT
19	CLKOUTLDOEN	R	0h	Synchronously enables/disables CLKOUTLDO 0x0 : synchronously disables CLKOUTLDO 0x1 : synchronously enables CLKOUTLDO
18	ULOWCLKEN	R/W	0h	Select CLKOUT source in bypass 0x0: When ADPLLLJ in bypass mode, CLKOUT = CLKINP/(N2+1) 0x1: When ADPLLLJ in bypass mode, CLKOUT = CLKINPULOW.

Copyright © 2025 Texas Instruments Incorporated

Table 6-42. PLL_CORE_CLKCTRL Register Field Descriptions (continued)

Bit	Field	Type	Reset	Description
17	CLKDCOLDOPWDNZ	R/W	0h	0 Asynchronous power down for CLKDCOLDO o/p.
16	M2PWDNZ	R/W	1h	M2 divider power down mode 0x0: Asynchronous power down for M2 divider 0x1 : M2 divider is functional
15	RESERVED	R/W	X	
14	STOPMODE	R/W	1h	When in Lossclk/Stbyret 0x0 : Limp mode 0x1 : Stopmode
13	RESERVED	R/W	X	
12-10	SELFREQDCO	R/W	2h	DCO Clock (DCOCLK = CLKINP * [M/(N+1)]) frequency range selector. 0x0: Reserved 0x2: HS2 : DCOCLK range is from 500 MHz to 1000 MHz 0x3: Reserved 0x4: HS1: DCOCLK range is from 1000 MHz to 2000 MHz 0x5: Reserved
9	RESERVED	R/W	X	
8	RELAXED_LOCK	R/W	0h	Decides when FREQLOCK asserted 0x0: FREQLOCK asserted when DC frequency error less than 1% 0x1: FREQLOCK asserted when DC frequency error less than 2%
7-2	RESERVED	R/W	X	
1	SSCTYPE	R/W	0h	SSC Type
0	TINTZ	R/W	0h	PLL core soft reset

Copyright © 2025 Texas Instruments Incorporated

6.2.2.40 PLL_CORE_TENABLE Register (Offset = 408h) [reset = X]

PLL_CORE_TENABLE is shown in Figure 6-41 and described in Table 6-43.

Return to the Summary Table.

Figure 6-41. PLL_CORE_TENABLE Register

31	30	29	28	27	26	25	24
RESERVED							
R/W-X							
23	22	21	20	19	18	17	16
RESERVED							
R/W-X							
15	14	13	12	11	10	9	8
RESERVED							
R/W-X							
7	6	5	4	3	2	1	0
RESERVED							TENABLE
R/W-X							R/W-0h

Table 6-43. PLL_CORE_TENABLE Register Field Descriptions

Bit	Field	Type	Reset	Description
31-1	RESERVED	R/W	X	
0	TENABLE	R/W	0h	M, N. SD and SELFREQDCO latch (active rise edge)

Copyright © 2025 Texas Instruments Incorporated

6.2.2.41 PLL_CORE_TENABLEDIV Register (Offset = 40Ch) [reset = X]

PLL_CORE_TENABLEDIV is shown in Figure 6-42 and described in Table 6-44.

Return to the Summary Table.

Figure 6-42. PLL_CORE_TENABLEDIV Register

31	30	29	28	27	26	25	24
RESERVED							
R/W-X							
23	22	21	20	19	18	17	16
RESERVED							
R/W-X							
15	14	13	12	11	10	9	8
RESERVED							
R/W-X							
7	6	5	4	3	2	1	0
RESERVED							TENABLEDIV
R/W-X							R/W-0h

Table 6-44. PLL_CORE_TENABLEDIV Register Field Descriptions

Bit	Field	Type	Reset	Description
31-1	RESERVED	R/W	X	
0	TENABLEDIV	R/W	0h	M2 and N2 latch (active rise edge)

Copyright © 2025 Texas Instruments Incorporated

6.2.2.42 PLL_CORE_M2NDIV Register (Offset = 410h) [reset = X]

PLL_CORE_M2NDIV is shown in Figure 6-43 and described in Table 6-45.

Return to the Summary Table.

Figure 6-43. PLL_CORE_M2NDIV Register

31	30	29	28	27	26	25	24	23	22	21	20	19	18	17	16	15	14	13	12	11	10	9	8	7	6	5	4	3	2	1	0
RESERVED									M2							RESERVED								N							
R/W-X									R/W-0h							R/W-X								R/W-0h							

Table 6-45. PLL_CORE_M2NDIV Register Field Descriptions

Bit	Field	Type	Reset	Description
31-23	RESERVED	R/W	X	
22-16	M2	R/W	0h	Post-divider is REGM2
15-8	RESERVED	R/W	X	
7-0	N	R/W	0h	Pre-divider is REGN+1

Copyright © 2025 Texas Instruments Incorporated

6.2.2.43 PLL_CORE_MN2DIV Register (Offset = 414h) [reset = X]

PLL_CORE_MN2DIV is shown in Figure 6-44 and described in Table 6-46.

Return to the Summary Table.

Figure 6-44. PLL_CORE_MN2DIV Register

31	30	29	28	27	26	25	24	23	22	21	20	19	18	17	16
RESERVED												N2			
R/W-X												R/W-0h			
15	14	13	12	11	10	9	8	7	6	5	4	3	2	1	0
RESERVED				M											
R/W-X				R/W-174h											

Table 6-46. PLL_CORE_MN2DIV Register Field Descriptions

Bit	Field	Type	Reset	Description
31-20	RESERVED	R/W	X	
19-16	N2	R/W	0h	Bypass divider is REGN2+1
15-12	RESERVED	R/W	X	
11-0	M	R/W	174h	Feedback Multiplier is REGM

Copyright © 2025 Texas Instruments Incorporated

6.2.2.44 PLL_CORE_FRACDIV Register (Offset = 418h) [reset = X]

PLL_CORE_FRACDIV is shown in Figure 6-45 and described in Table 6-47.

Return to the Summary Table.

Figure 6-45. PLL_CORE_FRACDIV Register

31	30	29	28	27	26	25	24	23	22	21	20	19	18	17	16
REGSD								RESERVED						FRACTIONALM	
R/W-8h								R/W-X						R/W-0h	
15	14	13	12	11	10	9	8	7	6	5	4	3	2	1	0
FRACTIONALM															
R/W-0h															

Table 6-47. PLL_CORE_FRACDIV Register Field Descriptions

Bit	Field	Type	Reset	Description
31-24	REGSD	R/W	8h	Sigma-Delta Divider Should be set by s/w to provide optimum jitter performance. DPLL_SD_DIV = CEILING ([DPLL_MULT/ (DPLL_DIV+1)] * CLKINP/ 250), where CLKINP is the input clock of the DPLL in MHz
23-18	RESERVED	R/W	X	
17-0	FRACTIONALM	R/W	0h	Fractional part of the M divider.

Copyright © 2025 Texas Instruments Incorporated

6.2.2.45 PLL_CORE_BWCTRL Register (Offset = 41Ch) [reset = X]

PLL_CORE_BWCTRL is shown in Figure 6-46 and described in Table 6-48.

Return to the Summary Table.

Figure 6-46. PLL_CORE_BWCTRL Register

31	30	29	28	27	26	25	24
RESERVED							
R/W-X							
23	22	21	20	19	18	17	16
RESERVED							
R/W-X							
15	14	13	12	11	10	9	8
RESERVED							
R/W-X							
7	6	5	4	3	2	1	0
RESERVED					BWCONTROL		BW_INCR_DECRZ
R/W-X					R/W-0h		R/W-0h

Table 6-48. PLL_CORE_BWCTRL Register Field Descriptions

Bit	Field	Type	Reset	Description
31-3	RESERVED	R/W	X	
2-1	BWCONTROL	R/W	0h	Change Loop Bandwidth
0	BW_INCR_DECRZ	R/W	0h	Direction of Loop Bandwidth 0x0 : decrease BW 0x1 : increase BW

Copyright © 2025 Texas Instruments Incorporated

6.2.2.46 PLL_CORE_FRACCTRL Register (Offset = 420h) [reset = 0h]

PLL_CORE_FRACCTRL is shown in Figure 6-47 and described in Table 6-49.

Return to the Summary Table.

Figure 6-47. PLL_CORE_FRACCTRL Register

31	30	29	28	27	26	25	24
DOWNSPREAD	ModFreqDividerExponent			ModFreqDividerMantissa			
R/W-0h	R/W-0h			R/W-0h			
23	22	21	20	19	18	17	16
ModFreqDividerMantissa			DeltaMStepInteger			DeltaMStepFraction	
R/W-0h			R/W-0h			R/W-0h	
15	14	13	12	11	10	9	8
DeltaMStepFraction							
R/W-0h							
7	6	5	4	3	2	1	0
DeltaMStepFraction							
R/W-0h							

Table 6-49. PLL_CORE_FRACCTRL Register Field Descriptions

Bit	Field	Type	Reset	Description
31	DOWNSPREAD	R/W	0h	Controls frequency spread 0x0 : enables both side frequency spread about the programmed frequency. 0x1 : enables low frequency spread only
30-28	ModFreqDividerExponent	R/W	0h	Exponent of the REFCLK divider to define the modulation frequency.
27-21	ModFreqDividerMantissa	R/W	0h	Mantissa of the REFCLK divider to define the modulation frequency
20-18	DeltaMStepInteger	R/W	0h	Integer part of Frequency Spread control
17-0	DeltaMStepFraction	R/W	0h	The fraction part of Frequency Spread control

Copyright © 2025 Texas Instruments Incorporated

6.2.2.47 PLL_CORE_STATUS Register (Offset = 424h) [reset = X]

PLL_CORE_STATUS is shown in Figure 6-48 and described in Table 6-50.

Return to the Summary Table.

Figure 6-48. PLL_CORE_STATUS Register

31	30	29	28	27	26	25	24
PONOUT	PGOODOUT	LDOPWDN	RECAL_BSTATUS3	RECAL_OPPIN	RESERVED		
R-1h	R-1h	R-0h	R-0h	R-0h	R-X		
23	22	21	20	19	18	17	16
RESERVED							
R-X							
15	14	13	12	11	10	9	8
RESERVED				CLKDCOLDOACK	PHASELOCK	FREQLOCK	BYPASSACK
R-X				R-0h	R-0h	R-0h	R-0h
7	6	5	4	3	2	1	0
STBYRETACK	LOSSREF	CLKOUTENACK	LOCK2	M2CHANGEACK	SSCACK	HIGHJITTER	BYPASS
R-0h	R-0h	R-1h	R-0h	R-0h	R-0h	R-0h	R-1h

Table 6-50. PLL_CORE_STATUS Register Field Descriptions

Bit	Field	Type	Reset	Description
31	PONOUT	R	1h	Status of the weak power-switch 0x0 : indicates the/OFF status of the weak power-switch in digital to SOC. 0x1 : ndicates the ON status of the weak power-switch in digital to SOC.
30	PGOODOUT	R	1h	Status of the strong power-switch 0x0 : indicates the/OFF status of the strong power-switch in digital to SOC. 0x1 : ndicates the ON status of the strong power-switch in digital to SOC.
29	LDOPWDN	R	0h	1 indicates ADPLLLJ internal LDO is power down. VDDLDOOUT will be un-defined in this condition
28	RECAL_BSTATUS3	R	0h	Recalibration status flag. 1 ADPLLLJ requires recalibration
27	RECAL_OPPIN	R	0h	Recalibration status flag. 1 ADPLLLJ requires recalibration
26-12	RESERVED	R	X	
11	CLKDCOLDOACK	R	0h	Status on PHASELOCK output pin
10	PHASELOCK	R	0h	Status on PHASELOCK output pin
9	FREQLOCK	R	0h	Status on FREQLOCK output pin
8	BYPASSACK	R	0h	Status of BYPASSACK output pin
7	STBYRETACK	R	0h	Standby and retention status 0x0: indicates to SOC that all internal clocks in ADPLLLJ are active and it is starting the relock process. 0x1: indicates to SOC that all internal clocks in ADPLLLJ are gated and it is ready for retention.
6	LOSSREF	R	0h	Reference input loss
5	CLKOUTENACK	R	1h	Indicates the enable/disable condition of CLKOUTEN 0x0 = CLKOUT gating completed 0x1 = CLKOUT enabling completed
4	LOCK2	R	0h	ADPLL internal loop lock status

Copyright © 2025 Texas Instruments Incorporated

Table 6-50. PLL_CORE_STATUS Register Field Descriptions (continued)

Bit	Field	Type	Reset	Description
3	M2CHANGEACK	R	0h	Acknowledge for change to M2 divider. Toggles from 1-0 or 0-1 (depending on current value) once CLKOUT frequency change has completed.
2	SSCACK	R	0h	Spread Spectrum status 0x0 : Spread-spectrum Clocking is disabled on output clocks 0x1 : Spread-spectrum Clocking is enabled on output clocks
1	HIGHJITTER	R	0h	1 indicates jitter. After PHASELOCK is asserted high, the HIGHJITTER flag is asserted high if phase error between REFCLK and FBCLK greater than 24%.
0	BYPASS	R	1h	Bypass status signal. 1 CLKOUT in bypass

Copyright © 2025 Texas Instruments Incorporated

6.2.2.48 PLL_CORE_HSDIVIDER Register (Offset = 428h) [reset = X]

PLL_CORE_HSDIVIDER is shown in Figure 6-49 and described in Table 6-51.

Return to the Summary Table.

Figure 6-49. PLL_CORE_HSDIVIDER Register

31	30	29	28	27	26	25	24
RESERVED							
R/W-X							
23	22	21	20	19	18	17	16
RESERVED						LDOPWDNACK	BYPASSACKZ
R/W-X						R-0h	R-0h
15	14	13	12	11	10	9	8
RESERVED							
R/W-X							
7	6	5	4	3	2	1	0
RESERVED					TENABLEDIV	LDOPWDN	BYPASS
R/W-X					R/W-0h	R/W-0h	R/W-0h

Table 6-51. PLL_CORE_HSDIVIDER Register Field Descriptions

Bit	Field	Type	Reset	Description
31-18	RESERVED	R/W	X	
17	LDOPWDNACK	R	0h	LDO Power Down Ack
16	BYPASSACKZ	R	0h	HSDIVIDER Bypass Ack
15-3	RESERVED	R/W	X	
2	TENABLEDIV	R/W	0h	Tenable Div
1	LDOPWDN	R/W	0h	LDO Power Down
0	BYPASS	R/W	0h	HSDIVIDER Bypass

Copyright © 2025 Texas Instruments Incorporated

6.2.2.49 PLL_CORE_HSDIVIDER_CLKOUT0 Register (Offset = 42Ch) [reset = X]

PLL_CORE_HSDIVIDER_CLKOUT0 is shown in Figure 6-50 and described in Table 6-52.

Return to the Summary Table.

Figure 6-50. PLL_CORE_HSDIVIDER_CLKOUT0 Register

31	30	29	28	27	26	25	24
RESERVED							
R/W-X							
23	22	21	20	19	18	17	16
RESERVED							
R/W-X							
15	14	13	12	11	10	9	8
RESERVED			PWDN	RESERVED		STATUS	GATE_CTRL
R/W-X			R/W-0h	R/W-X		R-0h	R/W-0h
7	6	5	4	3	2	1	0
RESERVED		DIVCHACK	DIV				
R/W-X		R-0h	R/W-4h				

Table 6-52. PLL_CORE_HSDIVIDER_CLKOUT0 Register Field Descriptions

Bit	Field	Type	Reset	Description
31-13	RESERVED	R/W	X	
12	PWDN	R/W	0h	Power down for HSDIVIDER M4 divider and hence CLKOUT0 output 0h (R/W) = CLKOUT0 divider active 1h (R/W) = CLKOUT0 divider is powered down
11-10	RESERVED	R/W	X	
9	STATUS	R	0h	HSDIVIDER CLKOUT0 status 0h (R) = The clock output is gated 1h (R) = The clock output is enabled
8	GATE_CTRL	R/W	0h	Control gating of HSDIVIDER CLKOUT0 0h (R/W) = Automatically gate this clock when there is no dependency for it 1h (R/W) = Force this clock to stay enabled even if there is no request
7-6	RESERVED	R/W	X	
5	DIVCHACK	R	0h	Toggle on this status bit after changing HSDIVIDER_CLKOUT0_DIV indicates that the change in divider value has taken effect
4-0	DIV	R/W	4h	DPLL post-divider factor, M4, for internal clock generation. Divide values from 1 to 31. 0h (R/W) = Reserved

Copyright © 2025 Texas Instruments Incorporated

6.2.2.50 PLL_CORE_HSDIVIDER_CLKOUT1 Register (Offset = 430h) [reset = X]

PLL_CORE_HSDIVIDER_CLKOUT1 is shown in Figure 6-51 and described in Table 6-53.

Return to the Summary Table.

Figure 6-51. PLL_CORE_HSDIVIDER_CLKOUT1 Register

31	30	29	28	27	26	25	24
RESERVED							
R/W-X							
23	22	21	20	19	18	17	16
RESERVED							
R/W-X							
15	14	13	12	11	10	9	8
RESERVED			PWDN	RESERVED		STATUS	GATE_CTRL
R/W-X			R/W-0h	R/W-X		R-0h	R/W-0h
7	6	5	4	3	2	1	0
RESERVED		DIVCHACK	DIV				
R/W-X		R-0h	R/W-4h				

Table 6-53. PLL_CORE_HSDIVIDER_CLKOUT1 Register Field Descriptions

Bit	Field	Type	Reset	Description
31-13	RESERVED	R/W	X	
12	PWDN	R/W	0h	Power down for HSDIVIDER M5 divider and hence CLKOUT1 output 0h (R/W) = CLKOUT1 divider active 1h (R/W) = CLKOUT1 divider is powered down
11-10	RESERVED	R/W	X	
9	STATUS	R	0h	HSDIVIDER CLKOUT1 status 0h (R) = The clock output is gated 1h (R) = The clock output is enabled
8	GATE_CTRL	R/W	0h	Control gating of HSDIVIDER CLKOUT1 0h (R/W) = Automatically gate this clock when there is no dependency for it 1h (R/W) = Force this clock to stay enabled even if there is no request
7-6	RESERVED	R/W	X	
5	DIVCHACK	R	0h	Toggle on this status bit after changing HSDIVIDER_CLKOUT1_DIV indicates that the change in divider value has taken effect
4-0	DIV	R/W	4h	DPLL post-divider factor, M5, for internal clock generation. Divide values from 1 to 31. 0h (R/W) = Reserved

Copyright © 2025 Texas Instruments Incorporated

6.2.2.51 PLL_CORE_HSDIVIDER_CLKOUT2 Register (Offset = 434h) [reset = X]

PLL_CORE_HSDIVIDER_CLKOUT2 is shown in Figure 6-52 and described in Table 6-54.

Return to the Summary Table.

Figure 6-52. PLL_CORE_HSDIVIDER_CLKOUT2 Register

31	30	29	28	27	26	25	24
RESERVED							
R/W-X							
23	22	21	20	19	18	17	16
RESERVED							
R/W-X							
15	14	13	12	11	10	9	8
RESERVED			PWDN	RESERVED		STATUS	GATE_CTRL
R/W-X			R/W-0h	R/W-X		R-0h	R/W-0h
7	6	5	4	3	2	1	0
RESERVED		DIVCHACK	DIV				
R/W-X		R-0h	R/W-4h				

Table 6-54. PLL_CORE_HSDIVIDER_CLKOUT2 Register Field Descriptions

Bit	Field	Type	Reset	Description
31-13	RESERVED	R/W	X	
12	PWDN	R/W	0h	Power down for HSDIVIDER M6 divider and hence CLKOUT2 output 0h (R/W) = CLKOUT2 divider active 1h (R/W) = CLKOUT2 divider is powered down
11-10	RESERVED	R/W	X	
9	STATUS	R	0h	HSDIVIDER CLKOUT2 status 0h (R) = The clock output is gated 1h (R) = The clock output is enabled
8	GATE_CTRL	R/W	0h	Control gating of HSDIVIDER CLKOUT2 0h (R/W) = Automatically gate this clock when there is no dependency for it 1h (R/W) = Force this clock to stay enabled even if there is no request
7-6	RESERVED	R/W	X	
5	DIVCHACK	R	0h	Toggle on this status bit after changing HSDIVIDER_CLKOUT2_DIV indicates that the change in divider value has taken effect
4-0	DIV	R/W	4h	DPLL post-divider factor, M6, for internal clock generation. Divide values from 1 to 31. 0h (R/W) = Reserved

Copyright © 2025 Texas Instruments Incorporated

6.2.2.52 PLL_CORE_HSDIVIDER_CLKOUT3 Register (Offset = 438h) [reset = X]

PLL_CORE_HSDIVIDER_CLKOUT3 is shown in Figure 6-53 and described in Table 6-55.

Return to the Summary Table.

Figure 6-53. PLL_CORE_HSDIVIDER_CLKOUT3 Register

31	30	29	28	27	26	25	24
RESERVED							
R/W-X							
23	22	21	20	19	18	17	16
RESERVED							
R/W-X							
15	14	13	12	11	10	9	8
RESERVED			PWDN	RESERVED		STATUS	GATE_CTRL
R/W-X			R/W-0h	R/W-X		R-0h	R/W-0h
7	6	5	4	3	2	1	0
RESERVED		DIVCHACK	DIV				
R/W-X		R-0h	R/W-4h				

Table 6-55. PLL_CORE_HSDIVIDER_CLKOUT3 Register Field Descriptions

Bit	Field	Type	Reset	Description
31-13	RESERVED	R/W	X	
12	PWDN	R/W	0h	Power down for HSDIVIDER M7 divider and hence CLKOUT3 output 0h (R/W) = CLKOUT3 divider active 1h (R/W) = CLKOUT3 divider is powered down
11-10	RESERVED	R/W	X	
9	STATUS	R	0h	HSDIVIDER CLKOUT3 status 0h (R) = The clock output is gated 1h (R) = The clock output is enabled
8	GATE_CTRL	R/W	0h	Control gating of HSDIVIDER CLKOUT3 0h (R/W) = Automatically gate this clock when there is no dependency for it 1h (R/W) = Force this clock to stay enabled even if there is no request
7-6	RESERVED	R/W	X	
5	DIVCHACK	R	0h	Toggle on this status bit after changing HSDIVIDER_CLKOUT3_DIV indicates that the change in divider value has taken effect
4-0	DIV	R/W	4h	DPLL post-divider factor, M7, for internal clock generation. Divide values from 1 to 31. 0h (R/W) = Reserved

Copyright © 2025 Texas Instruments Incorporated

6.2.2.53 MSS_CR5_CLK_SRC_SEL Register (Offset = 43Ch) [reset = X]

MSS_CR5_CLK_SRC_SEL is shown in Figure 6-54 and described in Table 6-56.

Return to the Summary Table.

Figure 6-54. MSS_CR5_CLK_SRC_SEL Register

31	30	29	28	27	26	25	24	23	22	21	20	19	18	17	16	15	14	13	12	11	10	9	8	7	6	5	4	3	2	1	0
RESERVED																				clksrcsel											
R/W-X																				R/W-0h											

Table 6-56. MSS_CR5_CLK_SRC_SEL Register Field Descriptions

Bit	Field	Type	Reset	Description
31-12	RESERVED	R/W	X	
11-0	clksrcsel	R/W	0h	Select line for selecting source clock for MSS Coretex R5 and System bus Clock. Data should be loaded as multibit. For example: if Clock source 0x5 should be selected then 0x555 should be configured to the register.

Copyright © 2025 Texas Instruments Incorporated

6.2.2.54 MSS_CR5_DIV_VAL Register (Offset = 440h) [reset = X]

MSS_CR5_DIV_VAL is shown in Figure 6-55 and described in Table 6-57.

Return to the Summary Table.

Figure 6-55. MSS_CR5_DIV_VAL Register

31	30	29	28	27	26	25	24	23	22	21	20	19	18	17	16	15	14	13	12	11	10	9	8	7	6	5	4	3	2	1	0
RESERVED																				clkdiv											
R/W-X																				R/W-0h											

Table 6-57. MSS_CR5_DIV_VAL Register Field Descriptions

Bit	Field	Type	Reset	Description
31-12	RESERVED	R/W	X	
11-0	clkdiv	R/W	0h	Divider value for Cortex R5 selected clock. Data should be loaded as multibit. For example: if divider value of 0x5 should be selected then 0x555 should be configured to the register.

Copyright © 2025 Texas Instruments Incorporated

6.2.2.55 SYS_CLK_DIV_VAL Register (Offset = 444h) [reset = X]

SYS_CLK_DIV_VAL is shown in Figure 6-56 and described in Table 6-58.

Return to the Summary Table.

Figure 6-56. SYS_CLK_DIV_VAL Register

31	30	29	28	27	26	25	24	23	22	21	20	19	18	17	16	15	14	13	12	11	10	9	8	7	6	5	4	3	2	1	0
RESERVED																				clkdiv											
R/W-X																				R/W-0h											

Table 6-58. SYS_CLK_DIV_VAL Register Field Descriptions

Bit	Field	Type	Reset	Description
31-12	RESERVED	R/W	X	
11-0	clkdiv	R/W	0h	Divider value for System Clock selected clock. Data should be loaded as multibit. For example: if divider value of 0x5 should be selected then 0x555 should be configured to the register.

Copyright © 2025 Texas Instruments Incorporated

6.2.2.56 MSS_CR5_CLK_GATE Register (Offset = 448h) [reset = X]

MSS_CR5_CLK_GATE is shown in Figure 6-57 and described in Table 6-59.

Return to the Summary Table.

Figure 6-57. MSS_CR5_CLK_GATE Register

31	30	29	28	27	26	25	24	23	22	21	20	19	18	17	16
RESERVED															
R/W-X															
15	14	13	12	11	10	9	8	7	6	5	4	3	2	1	0
RESERVED													gated		
R/W-X													R/W-0h		

Table 6-59. MSS_CR5_CLK_GATE Register Field Descriptions

Bit	Field	Type	Reset	Description
31-3	RESERVED	R/W	X	
2-0	gated	R/W	0h	Clock gating config for MSS Coretex R5. Data should be loaded as multibit. Write 3'b000 : Clock is ungated (multibit 000) Write 3'b111 : Clock is gated (multibit 111)

Copyright © 2025 Texas Instruments Incorporated

6.2.2.57 SYS_CLK_GATE Register (Offset = 44Ch) [reset = X]

SYS_CLK_GATE is shown in Figure 6-58 and described in Table 6-60.

Return to the Summary Table.

Figure 6-58. SYS_CLK_GATE Register

31	30	29	28	27	26	25	24	23	22	21	20	19	18	17	16
RESERVED															
R/W-X															
15	14	13	12	11	10	9	8	7	6	5	4	3	2	1	0
RESERVED													gated		
R/W-X													R/W-0h		

Table 6-60. SYS_CLK_GATE Register Field Descriptions

Bit	Field	Type	Reset	Description
31-3	RESERVED	R/W	X	
2-0	gated	R/W	0h	Clock gating config for System Clock Data should be loaded as multibit. Write 3'b000 : Clock is ungated (multibit 000) Write 3'b111 : Clock is gated (multibit 111)

Copyright © 2025 Texas Instruments Incorporated

6.2.2.58 SYS_CLK_STATUS Register (Offset = 450h) [reset = X]

SYS_CLK_STATUS is shown in Figure 6-59 and described in Table 6-61.

Return to the Summary Table.

Figure 6-59. SYS_CLK_STATUS Register

31	30	29	28	27	26	25	24	23	22	21	20	19	18	17	16
RESERVED															
R-X															
15	14	13	12	11	10	9	8	7	6	5	4	3	2	1	0
currdivider								RESERVED							
R-0h								R-X							

Table 6-61. SYS_CLK_STATUS Register Field Descriptions

Bit	Field	Type	Reset	Description
31-16	RESERVED	R	X	
15-8	currdivider	R	0h	Status shows the current divider value chosen for Sys Clock
7-0	RESERVED	R	X	

Copyright © 2025 Texas Instruments Incorporated

6.2.2.59 MSS_CR5_CLK_STATUS Register (Offset = 454h) [reset = X]

MSS_CR5_CLK_STATUS is shown in Figure 6-60 and described in Table 6-62.

Return to the Summary Table.

Figure 6-60. MSS_CR5_CLK_STATUS Register

31	30	29	28	27	26	25	24	23	22	21	20	19	18	17	16
RESERVED															
R-X															
15	14	13	12	11	10	9	8	7	6	5	4	3	2	1	0
currdivider								clkinuse							
R-0h								R-1h							

Table 6-62. MSS_CR5_CLK_STATUS Register Field Descriptions

Bit	Field	Type	Reset	Description
31-16	RESERVED	R	X	
15-8	currdivider	R	0h	Status shows the current divider value chosen for CortexR5 Clock
7-0	clkinuse	R	1h	Status shows the source clock slected for CortexR5 Clock

Copyright © 2025 Texas Instruments Incorporated

6.2.2.60 PLL_CORE_RSTCTRL Register (Offset = 458h) [reset = X]

PLL_CORE_RSTCTRL is shown in Figure 6-61 and described in Table 6-63.

Return to the Summary Table.

Figure 6-61. PLL_CORE_RSTCTRL Register

31	30	29	28	27	26	25	24	23	22	21	20	19	18	17	16
RESERVED															
R/W-X															
15	14	13	12	11	10	9	8	7	6	5	4	3	2	1	0
RESERVED													assert		
R/W-X													R/W-0h		

Table 6-63. PLL_CORE_RSTCTRL Register Field Descriptions

Bit	Field	Type	Reset	Description
31-3	RESERVED	R/W	X	
2-0	assert	R/W	0h	SW Reset override for the PLL Write 3'b111 : Override is enabled and Reset is asserted

Copyright © 2025 Texas Instruments Incorporated

6.2.2.61 PLL_CORE_HSDIVIDER_RSTCTRL Register (Offset = 45Ch) [reset = X]

PLL_CORE_HSDIVIDER_RSTCTRL is shown in Figure 6-62 and described in Table 6-64.

Return to the Summary Table.

Figure 6-62. PLL_CORE_HSDIVIDER_RSTCTRL Register

31	30	29	28	27	26	25	24	23	22	21	20	19	18	17	16
RESERVED															
R/W-X															
15	14	13	12	11	10	9	8	7	6	5	4	3	2	1	0
RESERVED													assert		
R/W-X													R/W-0h		

Table 6-64. PLL_CORE_HSDIVIDER_RSTCTRL Register Field Descriptions

Bit	Field	Type	Reset	Description
31-3	RESERVED	R/W	X	
2-0	assert	R/W	0h	SW Reset override for the HSDIVIDER Write 3'b111 : Override is enabled and Reset is asserted

Copyright © 2025 Texas Instruments Incorporated

6.2.2.62 PLL_DSP_PWRCTRL Register (Offset = 800h) [reset = X]

PLL_DSP_PWRCTRL is shown in Figure 6-63 and described in Table 6-65.

Return to the Summary Table.

Figure 6-63. PLL_DSP_PWRCTRL Register

31	30	29	28	27	26	25	24
RESERVED							
R/W-X							
23	22	21	20	19	18	17	16
RESERVED							
R/W-X							
15	14	13	12	11	10	9	8
RESERVED							
R/W-X							
7	6	5	4	3	2	1	0
RESERVED		PONIN	PGOODIN	RET	ISORET	ISOSCAN	OFFMODE
R/W-X		R/W-1h	R/W-1h	R/W-0h	R/W-0h	R/W-0h	R/W-0h

Table 6-65. PLL_DSP_PWRCTRL Register Field Descriptions

Bit	Field	Type	Reset	Description
31-6	RESERVED	R/W	X	
5	PONIN	R/W	1h	ON/OFF control of the weak power switch digital. For functional mode it should be 1
4	PGOODIN	R/W	1h	ON/OFF control of the strong power switch digital. For functional mode it should be 1
3	RET	R/W	0h	Save/Restore control for Retention mode. For functional mode it should be 0
2	ISORET	R/W	0h	Save/Restore control for Isolation of output pins For functional mode it should be 0
1	ISOSCAN	R/W	0h	Save/Restore control for Isolation of the Scanout pins. For functional mode it should be 0
0	OFFMODE	R/W	0h	Used to switch OFF the logic on VDDA. For functional mode it should be 0

Copyright © 2025 Texas Instruments Incorporated

6.2.2.63 PLL_DSP_CLKCTRL Register (Offset = 804h) [reset = X]

PLL_DSP_CLKCTRL is shown in Figure 6-64 and described in Table 6-66.

Return to the Summary Table.

Figure 6-64. PLL_DSP_CLKCTRL Register

31	30	29	28	27	26	25	24
CYCLESLIPEN	ENSSC	CLKDCOLDOEN	NWELLTRIM				
R/W-0h	R/W-0h	R/W-0h	R/W-9h				
23	22	21	20	19	18	17	16
IDLE	BYPASSACKZ	STBYRET	CLKOUTEN	CLKOUTLDOEN	ULOWCLKEN	CLKDCOLDOPWDNZ	M2PWDNZ
R/W-1h	R/W-0h	R/W-0h	R/W-1h	R-0h	R/W-0h	R/W-0h	R/W-1h
15	14	13	12	11	10	9	8
RESERVED	STOPMODE	RESERVED	SELFREQDCO			RESERVED	RELAXED_LOCK
R/W-X	R/W-1h	R/W-X	R/W-2h			R/W-X	R/W-0h
7	6	5	4	3	2	1	0
RESERVED						SSCTYPE	TINTZ
R/W-X						R/W-0h	R/W-0h

Table 6-66. PLL_DSP_CLKCTRL Register Field Descriptions

Bit	Field	Type	Reset	Description
31	CYCLESLIPEN	R/W	0h	FailSafe enable to trigger re-calibration in case CycleSlip occurs between REFCLK and FBCLK.
30	ENSSC	R/W	0h	Controls Clock Spreading. SSC is not supported. Should be set to 0x0 to disable clock spreading.
29	CLKDCOLDOEN	R/W	0h	Synchronously enables/disables CLKDCOLDO 0x0 : synchronously disables CLKDCOLDO 0x1 : synchronously enables CLKDCOLDO
28-24	NWELLTRIM	R/W	9h	Trim value for the PLL
23	IDLE	R/W	1h	Sets PLL to Idle mode 0x0 : When SYSRESET = 0 and TINITZ = 1 IDLE = 0 PLL will go to Active and Locked 0x1 : When SYSRESET = 0 and TINITZ = 1 IDLE = 1 PLL will go to Idle Bypass low powe
22	BYPASSACKZ	R/W	0h	BYPASSACKZ is a special purpose input to the module. In general this input is expected to be tied to static low. For the output clocks of the module that do not have an internal bypass mux viz. CLKDCOLDO and CLKOUTLDO, a bypass mux could be implemented external to the module.
21	STBYRET	R/W	0h	Standby retention control 0x0 : prepares ADPLLLJ for relock when out of retention by removing the gating on all internal clocks. 0x1 : prepares ADPLLLJ for retention by gating all the internal clocks.
20	CLKOUTEN	R/W	1h	CLKOUT enable or disable 0x0 : synchronously disables CLKOUT 0x1 : synchronously enables CLKOUT
19	CLKOUTLDOEN	R	0h	Synchronously enables/disables CLKOUTLDO 0x0 : synchronously disables CLKOUTLDO 0x1 : synchronously enables CLKOUTLDO
18	ULOWCLKEN	R/W	0h	Select CLKOUT source in bypass 0x0: When ADPLLLJ in bypass mode, CLKOUT = CLKINP/(N2+1) 0x1: When ADPLLLJ in bypass mode, CLKOUT = CLKINPULOW.

Copyright © 2025 Texas Instruments Incorporated

Table 6-66. PLL_DSP_CLKCTRL Register Field Descriptions (continued)

Bit	Field	Type	Reset	Description
17	CLKDCOLDOPWDNZ	R/W	0h	0 Asynchronous power down for CLKDCOLDO o/p.
16	M2PWDNZ	R/W	1h	M2 divider power down mode 0x0: Asynchronous power down for M2 divider 0x1 : M2 divider is functional
15	RESERVED	R/W	X	
14	STOPMODE	R/W	1h	When in Lossclk/Stbyret 0x0 : Limp mode 0x1 : Stopmode
13	RESERVED	R/W	X	
12-10	SELFREQDCO	R/W	2h	DCO Clock (DCOCLK = CLKINP * [M/(N+1)]) frequency range selector. 0x0: Reserved 0x2: HS2 : DCOCLK range is from 500 MHz to 1000 MHz 0x3: Reserved 0x4: HS1: DCOCLK range is from 1000 MHz to 2000 MHz 0x5: Reserved
9	RESERVED	R/W	X	
8	RELAXED_LOCK	R/W	0h	Decides when FREQLOCK asserted 0x0: FREQLOCK asserted when DC frequency error less than 1% 0x1: FREQLOCK asserted when DC frequency error less than 2%
7-2	RESERVED	R/W	X	
1	SSCTYPE	R/W	0h	SSC Type
0	TINTZ	R/W	0h	PLL core soft reset

Copyright © 2025 Texas Instruments Incorporated

6.2.2.64 PLL_DSP_TENABLE Register (Offset = 808h) [reset = X]

PLL_DSP_TENABLE is shown in Figure 6-65 and described in Table 6-67.

Return to the Summary Table.

Figure 6-65. PLL_DSP_TENABLE Register

31	30	29	28	27	26	25	24
RESERVED							
R/W-X							
23	22	21	20	19	18	17	16
RESERVED							
R/W-X							
15	14	13	12	11	10	9	8
RESERVED							
R/W-X							
7	6	5	4	3	2	1	0
RESERVED							TENABLE
R/W-X							R/W-0h

Table 6-67. PLL_DSP_TENABLE Register Field Descriptions

Bit	Field	Type	Reset	Description
31-1	RESERVED	R/W	X	
0	TENABLE	R/W	0h	M, N. SD and SELFREQDCO latch (active rise edge)

Copyright © 2025 Texas Instruments Incorporated

6.2.2.65 PLL_DSP_TENABLEDIV Register (Offset = 80Ch) [reset = X]

PLL_DSP_TENABLEDIV is shown in Figure 6-66 and described in Table 6-68.

Return to the Summary Table.

Figure 6-66. PLL_DSP_TENABLEDIV Register

31	30	29	28	27	26	25	24
RESERVED							
R/W-X							
23	22	21	20	19	18	17	16
RESERVED							
R/W-X							
15	14	13	12	11	10	9	8
RESERVED							
R/W-X							
7	6	5	4	3	2	1	0
RESERVED							TENABLEDIV
R/W-X							R/W-0h

Table 6-68. PLL_DSP_TENABLEDIV Register Field Descriptions

Bit	Field	Type	Reset	Description
31-1	RESERVED	R/W	X	
0	TENABLEDIV	R/W	0h	M2 and N2 latch (active rise edge)

Copyright © 2025 Texas Instruments Incorporated

6.2.2.66 PLL_DSP_M2NDIV Register (Offset = 810h) [reset = X]

PLL_DSP_M2NDIV is shown in Figure 6-67 and described in Table 6-69.

Return to the Summary Table.

Figure 6-67. PLL_DSP_M2NDIV Register

31	30	29	28	27	26	25	24	23	22	21	20	19	18	17	16	15	14	13	12	11	10	9	8	7	6	5	4	3	2	1	0
RESERVED									M2							RESERVED								N							
R/W-X									R/W-0h							R/W-X								R/W-0h							

Table 6-69. PLL_DSP_M2NDIV Register Field Descriptions

Bit	Field	Type	Reset	Description
31-23	RESERVED	R/W	X	
22-16	M2	R/W	0h	Post-divider is REGM2
15-8	RESERVED	R/W	X	
7-0	N	R/W	0h	Pre-divider is REGN+1

Copyright © 2025 Texas Instruments Incorporated

6.2.2.67 PLL_DSP_MN2DIV Register (Offset = 814h) [reset = X]

PLL_DSP_MN2DIV is shown in Figure 6-68 and described in Table 6-70.

Return to the Summary Table.

Figure 6-68. PLL_DSP_MN2DIV Register

31	30	29	28	27	26	25	24	23	22	21	20	19	18	17	16
RESERVED												N2			
R/W-X												R/W-0h			
15	14	13	12	11	10	9	8	7	6	5	4	3	2	1	0
RESERVED				M											
R/W-X				R/W-174h											

Table 6-70. PLL_DSP_MN2DIV Register Field Descriptions

Bit	Field	Type	Reset	Description
31-20	RESERVED	R/W	X	
19-16	N2	R/W	0h	Bypass divider is REGN2+1
15-12	RESERVED	R/W	X	
11-0	M	R/W	174h	Feedback Multiplier is REGM

Copyright © 2025 Texas Instruments Incorporated

6.2.2.68 PLL_DSP_FRACDIV Register (Offset = 818h) [reset = X]

PLL_DSP_FRACDIV is shown in Figure 6-69 and described in Table 6-71.

Return to the Summary Table.

Figure 6-69. PLL_DSP_FRACDIV Register

31	30	29	28	27	26	25	24	23	22	21	20	19	18	17	16
REGSD								RESERVED						FRACTIONALM	
R/W-8h								R/W-X						R/W-0h	
15	14	13	12	11	10	9	8	7	6	5	4	3	2	1	0
FRACTIONALM															
R/W-0h															

Table 6-71. PLL_DSP_FRACDIV Register Field Descriptions

Bit	Field	Type	Reset	Description
31-24	REGSD	R/W	8h	Sigma-Delta Divider Should be set by s/w to provide optimum jitter performance. DPLL_SD_DIV = CEILING ([DPLL_MULT/ (DPLL_DIV+1)] * CLKINP/ 250), where CLKINP is the input clock of the DPLL in MHz
23-18	RESERVED	R/W	X	
17-0	FRACTIONALM	R/W	0h	Fractional part of the M divider.

Copyright © 2025 Texas Instruments Incorporated

6.2.2.69 PLL_DSP_BWCTRL Register (Offset = 81Ch) [reset = X]

PLL_DSP_BWCTRL is shown in Figure 6-70 and described in Table 6-72.

Return to the Summary Table.

Figure 6-70. PLL_DSP_BWCTRL Register

31	30	29	28	27	26	25	24
RESERVED							
R/W-X							
23	22	21	20	19	18	17	16
RESERVED							
R/W-X							
15	14	13	12	11	10	9	8
RESERVED							
R/W-X							
7	6	5	4	3	2	1	0
RESERVED					BWCONTROL		BW_INCR_DECRZ
R/W-X					R/W-0h		R/W-0h

Table 6-72. PLL_DSP_BWCTRL Register Field Descriptions

Bit	Field	Type	Reset	Description
31-3	RESERVED	R/W	X	
2-1	BWCONTROL	R/W	0h	Change Loop Bandwidth
0	BW_INCR_DECRZ	R/W	0h	Direction of Loop Bandwidth 0x0 : decrease BW 0x1 : increase BW

Copyright © 2025 Texas Instruments Incorporated

6.2.2.70 PLL_DSP_FRACCTRL Register (Offset = 820h) [reset = 0h]

PLL_DSP_FRACCTRL is shown in Figure 6-71 and described in Table 6-73.

Return to the Summary Table.

Figure 6-71. PLL_DSP_FRACCTRL Register

31	30	29	28	27	26	25	24
DOWNSPREAD	ModFreqDividerExponent			ModFreqDividerMantissa			
R/W-0h	R/W-0h			R/W-0h			
23	22	21	20	19	18	17	16
ModFreqDividerMantissa			DeltaMStepInteger			DeltaMStepFraction	
R/W-0h			R/W-0h			R/W-0h	
15	14	13	12	11	10	9	8
DeltaMStepFraction							
R/W-0h							
7	6	5	4	3	2	1	0
DeltaMStepFraction							
R/W-0h							

Table 6-73. PLL_DSP_FRACCTRL Register Field Descriptions

Bit	Field	Type	Reset	Description
31	DOWNSPREAD	R/W	0h	Controls frequency spread 0x0 : enables both side frequency spread about the programmed frequency. 0x1 : enables low frequency spread only
30-28	ModFreqDividerExponent	R/W	0h	Exponent of the REFCLK divider to define the modulation frequency.
27-21	ModFreqDividerMantissa	R/W	0h	Mantissa of the REFCLK divider to define the modulation frequency
20-18	DeltaMStepInteger	R/W	0h	Integer part of Frequency Spread control
17-0	DeltaMStepFraction	R/W	0h	The fraction part of Frequency Spread control

Copyright © 2025 Texas Instruments Incorporated

6.2.2.71 PLL_DSP_STATUS Register (Offset = 824h) [reset = X]

PLL_DSP_STATUS is shown in Figure 6-72 and described in Table 6-74.

Return to the Summary Table.

Figure 6-72. PLL_DSP_STATUS Register

31	30	29	28	27	26	25	24
PONOUT	PGOODOUT	LDOPWDN	RECAL_BSTATUS3	RECAL_OPPIN	RESERVED		
R-1h	R-1h	R-0h	R-0h	R-0h	R-X		
23	22	21	20	19	18	17	16
RESERVED							
R-X							
15	14	13	12	11	10	9	8
RESERVED				CLKDCOLDOACK	PHASELOCK	FREQLOCK	BYPASSACK
R-X				R-0h	R-0h	R-0h	R-0h
7	6	5	4	3	2	1	0
STBYRETACK	LOSSREF	CLKOUTENACK	LOCK2	M2CHANGEACK	SSCACK	HIGHJITTER	BYPASS
R-0h	R-0h	R-1h	R-0h	R-0h	R-0h	R-0h	R-1h

Table 6-74. PLL_DSP_STATUS Register Field Descriptions

Bit	Field	Type	Reset	Description
31	PONOUT	R	1h	Status of the weak power-switch 0x0 : indicates the/OFF status of the weak power-switch in digital to SOC. 0x1 : ndicates the ON status of the weak power-switch in digital to SOC.
30	PGOODOUT	R	1h	Status of the strong power-switch 0x0 : indicates the/OFF status of the strong power-switch in digital to SOC. 0x1 : ndicates the ON status of the strong power-switch in digital to SOC.
29	LDOPWDN	R	0h	1 indicates ADPLLLJ internal LDO is power down. VDDLDOOUT will be un-defined in this condition
28	RECAL_BSTATUS3	R	0h	Recalibration status flag. 1 ADPLLLJ requires recalibration
27	RECAL_OPPIN	R	0h	Recalibration status flag. 1 ADPLLLJ requires recalibration
26-12	RESERVED	R	X	
11	CLKDCOLDOACK	R	0h	Status on PHASELOCK output pin
10	PHASELOCK	R	0h	Status on PHASELOCK output pin
9	FREQLOCK	R	0h	Status on FREQLOCK output pin
8	BYPASSACK	R	0h	Status of BYPASSACK output pin
7	STBYRETACK	R	0h	Standby and retention status 0x0: indicates to SOC that all internal clocks in ADPLLLJ are active and it is starting the relock process. 0x1: indicates to SOC that all internal clocks in ADPLLLJ are gated and it is ready for retention.
6	LOSSREF	R	0h	Reference input loss
5	CLKOUTENACK	R	1h	Indicates the enable/disable condition of CLKOUTEN 0x0 = CLKOUT gating completed 0x1 = CLKOUT enabling completed
4	LOCK2	R	0h	ADPLL internal loop lock status

Copyright © 2025 Texas Instruments Incorporated

Table 6-74. PLL_DSP_STATUS Register Field Descriptions (continued)

Bit	Field	Type	Reset	Description
3	M2CHANGEACK	R	0h	Acknowledge for change to M2 divider. Toggles from 1-0 or 0-1 (depending on current value) once CLKOUT frequency change has completed.
2	SSCACK	R	0h	Spread Spectrum status 0x0 : Spread-spectrum Clocking is disabled on output clocks 0x1 : Spread-spectrum Clocking is enabled on output clocks
1	HIGHJITTER	R	0h	1 indicates jitter. After PHASELOCK is asserted high, the HIGHJITTER flag is asserted high if phase error between REFCLK and FBCLK greater than 24%.
0	BYPASS	R	1h	Bypass status signal. 1 CLKOUT in bypass

Copyright © 2025 Texas Instruments Incorporated

6.2.2.72 PLL_DSP_HSDIVIDER Register (Offset = 828h) [reset = X]

PLL_DSP_HSDIVIDER is shown in Figure 6-73 and described in Table 6-75.

Return to the Summary Table.

Figure 6-73. PLL_DSP_HSDIVIDER Register

31	30	29	28	27	26	25	24
RESERVED							
R/W-X							
23	22	21	20	19	18	17	16
RESERVED						LDOPWDNACK	BYPASSACKZ
R/W-X						R-0h	R-0h
15	14	13	12	11	10	9	8
RESERVED							
R/W-X							
7	6	5	4	3	2	1	0
RESERVED					TENABLEDIV	LDOPWDN	BYPASS
R/W-X					R/W-0h	R/W-0h	R/W-0h

Table 6-75. PLL_DSP_HSDIVIDER Register Field Descriptions

Bit	Field	Type	Reset	Description
31-18	RESERVED	R/W	X	
17	LDOPWDNACK	R	0h	LDO Power Down Ack
16	BYPASSACKZ	R	0h	HSDIVIDER Bypass Ack
15-3	RESERVED	R/W	X	
2	TENABLEDIV	R/W	0h	Tenable Div
1	LDOPWDN	R/W	0h	LDO Power Down
0	BYPASS	R/W	0h	HSDIVIDER Bypass

Copyright © 2025 Texas Instruments Incorporated

6.2.2.73 PLL_DSP_HSDIVIDER_CLKOUT0 Register (Offset = 82Ch) [reset = X]

PLL_DSP_HSDIVIDER_CLKOUT0 is shown in Figure 6-74 and described in Table 6-76.

Return to the Summary Table.

Figure 6-74. PLL_DSP_HSDIVIDER_CLKOUT0 Register

31	30	29	28	27	26	25	24
RESERVED							
R/W-X							
23	22	21	20	19	18	17	16
RESERVED							
R/W-X							
15	14	13	12	11	10	9	8
RESERVED			PWDN	RESERVED		STATUS	GATE_CTRL
R/W-X			R/W-0h	R/W-X		R-0h	R/W-0h
7	6	5	4	3	2	1	0
RESERVED		DIVCHACK	DIV				
R/W-X		R-0h	R/W-4h				

Table 6-76. PLL_DSP_HSDIVIDER_CLKOUT0 Register Field Descriptions

Bit	Field	Type	Reset	Description
31-13	RESERVED	R/W	X	
12	PWDN	R/W	0h	Power down for HSDIVIDER M4 divider and hence CLKOUT0 output 0h (R/W) = CLKOUT0 divider active 1h (R/W) = CLKOUT0 divider is powered down
11-10	RESERVED	R/W	X	
9	STATUS	R	0h	HSDIVIDER CLKOUT0 status 0h (R) = The clock output is gated 1h (R) = The clock output is enabled
8	GATE_CTRL	R/W	0h	Control gating of HSDIVIDER CLKOUT0 0h (R/W) = Automatically gate this clock when there is no dependency for it 1h (R/W) = Force this clock to stay enabled even if there is no request
7-6	RESERVED	R/W	X	
5	DIVCHACK	R	0h	Toggle on this status bit after changing HSDIVIDER_CLKOUT0_DIV indicates that the change in divider value has taken effect
4-0	DIV	R/W	4h	DPLL post-divider factor, M4, for internal clock generation. Divide values from 1 to 31. 0h (R/W) = Reserved

Copyright © 2025 Texas Instruments Incorporated

6.2.2.74 PLL_DSP_HSDIVIDER_CLKOUT1 Register (Offset = 830h) [reset = X]

PLL_DSP_HSDIVIDER_CLKOUT1 is shown in Figure 6-75 and described in Table 6-77.

Return to the Summary Table.

Figure 6-75. PLL_DSP_HSDIVIDER_CLKOUT1 Register

31	30	29	28	27	26	25	24
RESERVED							
R/W-X							
23	22	21	20	19	18	17	16
RESERVED							
R/W-X							
15	14	13	12	11	10	9	8
RESERVED			PWDN	RESERVED		STATUS	GATE_CTRL
R/W-X			R/W-0h	R/W-X		R-0h	R/W-0h
7	6	5	4	3	2	1	0
RESERVED		DIVCHACK	DIV				
R/W-X		R-0h	R/W-4h				

Table 6-77. PLL_DSP_HSDIVIDER_CLKOUT1 Register Field Descriptions

Bit	Field	Type	Reset	Description
31-13	RESERVED	R/W	X	
12	PWDN	R/W	0h	Power down for HSDIVIDER M5 divider and hence CLKOUT1 output 0h (R/W) = CLKOUT1 divider active 1h (R/W) = CLKOUT1 divider is powered down
11-10	RESERVED	R/W	X	
9	STATUS	R	0h	HSDIVIDER CLKOUT1 status 0h (R) = The clock output is gated 1h (R) = The clock output is enabled
8	GATE_CTRL	R/W	0h	Control gating of HSDIVIDER CLKOUT1 0h (R/W) = Automatically gate this clock when there is no dependency for it 1h (R/W) = Force this clock to stay enabled even if there is no request
7-6	RESERVED	R/W	X	
5	DIVCHACK	R	0h	Toggle on this status bit after changing HSDIVIDER_CLKOUT1_DIV indicates that the change in divider value has taken effect
4-0	DIV	R/W	4h	DPLL post-divider factor, M5, for internal clock generation. Divide values from 1 to 31. 0h (R/W) = Reserved

Copyright © 2025 Texas Instruments Incorporated

6.2.2.75 PLL_DSP_HSDIVIDER_CLKOUT2 Register (Offset = 834h) [reset = X]

PLL_DSP_HSDIVIDER_CLKOUT2 is shown in Figure 6-76 and described in Table 6-78.

Return to the Summary Table.

Figure 6-76. PLL_DSP_HSDIVIDER_CLKOUT2 Register

31	30	29	28	27	26	25	24
RESERVED							
R/W-X							
23	22	21	20	19	18	17	16
RESERVED							
R/W-X							
15	14	13	12	11	10	9	8
RESERVED			PWDN	RESERVED		STATUS	GATE_CTRL
R/W-X			R/W-0h	R/W-X		R-0h	R/W-0h
7	6	5	4	3	2	1	0
RESERVED		DIVCHACK	DIV				
R/W-X		R-0h	R/W-4h				

Table 6-78. PLL_DSP_HSDIVIDER_CLKOUT2 Register Field Descriptions

Bit	Field	Type	Reset	Description
31-13	RESERVED	R/W	X	
12	PWDN	R/W	0h	Power down for HSDIVIDER M6 divider and hence CLKOUT2 output 0h (R/W) = CLKOUT2 divider active 1h (R/W) = CLKOUT2 divider is powered down
11-10	RESERVED	R/W	X	
9	STATUS	R	0h	HSDIVIDER CLKOUT2 status 0h (R) = The clock output is gated 1h (R) = The clock output is enabled
8	GATE_CTRL	R/W	0h	Control gating of HSDIVIDER CLKOUT2 0h (R/W) = Automatically gate this clock when there is no dependency for it 1h (R/W) = Force this clock to stay enabled even if there is no request
7-6	RESERVED	R/W	X	
5	DIVCHACK	R	0h	Toggle on this status bit after changing HSDIVIDER_CLKOUT2_DIV indicates that the change in divider value has taken effect
4-0	DIV	R/W	4h	DPLL post-divider factor, M6, for internal clock generation. Divide values from 1 to 31. 0h (R/W) = Reserved

Copyright © 2025 Texas Instruments Incorporated

6.2.2.76 PLL_DSP_HSDIVIDER_CLKOUT3 Register (Offset = 838h) [reset = X]

PLL_DSP_HSDIVIDER_CLKOUT3 is shown in Figure 6-77 and described in Table 6-79.

Return to the Summary Table.

Figure 6-77. PLL_DSP_HSDIVIDER_CLKOUT3 Register

31	30	29	28	27	26	25	24
RESERVED							
R/W-X							
23	22	21	20	19	18	17	16
RESERVED							
R/W-X							
15	14	13	12	11	10	9	8
RESERVED			PWDN	RESERVED		STATUS	GATE_CTRL
R/W-X			R/W-0h	R/W-X		R-0h	R/W-0h
7	6	5	4	3	2	1	0
RESERVED		DIVCHACK	DIV				
R/W-X		R-0h	R/W-4h				

Table 6-79. PLL_DSP_HSDIVIDER_CLKOUT3 Register Field Descriptions

Bit	Field	Type	Reset	Description
31-13	RESERVED	R/W	X	
12	PWDN	R/W	0h	Power down for HSDIVIDER M7 divider and hence CLKOUT3 output 0h (R/W) = CLKOUT3 divider active 1h (R/W) = CLKOUT3 divider is powered down
11-10	RESERVED	R/W	X	
9	STATUS	R	0h	HSDIVIDER CLKOUT3 status 0h (R) = The clock output is gated 1h (R) = The clock output is enabled
8	GATE_CTRL	R/W	0h	Control gating of HSDIVIDER CLKOUT3 0h (R/W) = Automatically gate this clock when there is no dependency for it 1h (R/W) = Force this clock to stay enabled even if there is no request
7-6	RESERVED	R/W	X	
5	DIVCHACK	R	0h	Toggle on this status bit after changing HSDIVIDER_CLKOUT3_DIV indicates that the change in divider value has taken effect
4-0	DIV	R/W	4h	DPLL post-divider factor, M7, for internal clock generation. Divide values from 1 to 31. 0h (R/W) = Reserved

Copyright © 2025 Texas Instruments Incorporated

6.2.2.77 PLL_PER_PWRCTRL Register (Offset = 83Ch) [reset = X]

PLL_PER_PWRCTRL is shown in Figure 6-78 and described in Table 6-80.

Return to the Summary Table.

Figure 6-78. PLL_PER_PWRCTRL Register

31	30	29	28	27	26	25	24
RESERVED							
R/W-X							
23	22	21	20	19	18	17	16
RESERVED							
R/W-X							
15	14	13	12	11	10	9	8
RESERVED							
R/W-X							
7	6	5	4	3	2	1	0
RESERVED		PONIN	PGOODIN	RET	ISORET	ISOSCAN	OFFMODE
R/W-X		R/W-1h	R/W-1h	R/W-0h	R/W-0h	R/W-0h	R/W-0h

Table 6-80. PLL_PER_PWRCTRL Register Field Descriptions

Bit	Field	Type	Reset	Description
31-6	RESERVED	R/W	X	
5	PONIN	R/W	1h	ON/OFF control of the weak power switch digital. For functional mode it should be 1
4	PGOODIN	R/W	1h	ON/OFF control of the strong power switch digital. For functional mode it should be 1
3	RET	R/W	0h	Save/Restore control for Retention mode. For functional mode it should be 0
2	ISORET	R/W	0h	Save/Restore control for Isolation of output pins For functional mode it should be 0
1	ISOSCAN	R/W	0h	Save/Restore control for Isolation of the Scanout pins. For functional mode it should be 0
0	OFFMODE	R/W	0h	Used to switch OFF the logic on VDDA. For functional mode it should be 0

Copyright © 2025 Texas Instruments Incorporated

6.2.2.78 PLL_PER_CLKCTRL Register (Offset = 840h) [reset = X]

PLL_PER_CLKCTRL is shown in Figure 6-79 and described in Table 6-81.

Return to the Summary Table.

Figure 6-79. PLL_PER_CLKCTRL Register

31	30	29	28	27	26	25	24
CYCLESLIPEN	ENSSC	CLKDCOLDOEN	NWELLTRIM				
R/W-0h	R/W-0h	R/W-0h	R/W-9h				
23	22	21	20	19	18	17	16
IDLE	BYPASSACKZ	STBYRET	CLKOUTEN	CLKOUTLDOEN	ULOWCLKEN	CLKDCOLDOPWDNZ	M2PWDNZ
R/W-1h	R/W-0h	R/W-0h	R/W-1h	R-0h	R/W-0h	R/W-0h	R/W-1h
15	14	13	12	11	10	9	8
RESERVED	STOPMODE	RESERVED	SELFREQDCO			RESERVED	RELAXED_LOCK
R/W-X	R/W-1h	R/W-X	R/W-2h			R/W-X	R/W-0h
7	6	5	4	3	2	1	0
RESERVED						SSCTYPE	TINTZ
R/W-X						R/W-0h	R/W-0h

Table 6-81. PLL_PER_CLKCTRL Register Field Descriptions

Bit	Field	Type	Reset	Description
31	CYCLESLIPEN	R/W	0h	FailSafe enable to trigger re-calibration in case CycleSlip occurs between REFCLK and FBCLK.
30	ENSSC	R/W	0h	Controls Clock Spreading. SSC is not supported. Should be set to 0x0 to disable clock spreading.
29	CLKDCOLDOEN	R/W	0h	Synchronously enables/disables CLKDCOLDO 0x0 : synchronously disables CLKDCOLDO 0x1 : synchronously enables CLKDCOLDO
28-24	NWELLTRIM	R/W	9h	Trim value for the PLL
23	IDLE	R/W	1h	Sets PLL to Idle mode 0x0 : When SYSRESET = 0 and TINITZ = 1 IDLE = 0 PLL will go to Active and Locked 0x1 : When SYSRESET = 0 and TINITZ = 1 IDLE = 1 PLL will go to Idle Bypass low powe
22	BYPASSACKZ	R/W	0h	BYPASSACKZ is a special purpose input to the module. In general this input is expected to be tied to static low. For the output clocks of the module that do not have an internal bypass mux viz. CLKDCOLDO and CLKOUTLDO, a bypass mux could be implemented external to the module.
21	STBYRET	R/W	0h	Standby retention control 0x0 : prepares ADPLLLJ for relock when out of retention by removing the gating on all internal clocks. 0x1 : prepares ADPLLLJ for retention by gating all the internal clocks.
20	CLKOUTEN	R/W	1h	CLKOUT enable or disable 0x0 : synchronously disables CLKOUT 0x1 : synchronously enables CLKOUT
19	CLKOUTLDOEN	R	0h	Synchronously enables/disables CLKOUTLDO 0x0 : synchronously disables CLKOUTLDO 0x1 : synchronously enables CLKOUTLDO
18	ULOWCLKEN	R/W	0h	Select CLKOUT source in bypass 0x0: When ADPLLLJ in bypass mode, CLKOUT = CLKINP/(N2+1) 0x1: When ADPLLLJ in bypass mode, CLKOUT = CLKINPULOW.

Copyright © 2025 Texas Instruments Incorporated

Table 6-81. PLL_PER_CLKCTRL Register Field Descriptions (continued)

Bit	Field	Type	Reset	Description
17	CLKDCOLDOPWDNZ	R/W	0h	0 Asynchronous power down for CLKDCOLDO o/p.
16	M2PWDNZ	R/W	1h	M2 divider power down mode 0x0: Asynchronous power down for M2 divider 0x1 : M2 divider is functional
15	RESERVED	R/W	X	
14	STOPMODE	R/W	1h	When in Lossclk/Stbyret 0x0 : Limp mode 0x1 : Stopmode
13	RESERVED	R/W	X	
12-10	SELFREQDCO	R/W	2h	DCO Clock (DCOCLK = CLKINP * [M/(N+1)]) frequency range selector. 0x0: Reserved 0x2: HS2 : DCOCLK range is from 500 MHz to 1000 MHz 0x3: Reserved 0x4: HS1: DCOCLK range is from 1000 MHz to 2000 MHz 0x5: Reserved
9	RESERVED	R/W	X	
8	RELAXED_LOCK	R/W	0h	Decides when FREQLOCK asserted 0x0: FREQLOCK asserted when DC frequency error less than 1% 0x1: FREQLOCK asserted when DC frequency error less than 2%
7-2	RESERVED	R/W	X	
1	SSCTYPE	R/W	0h	SSC Type
0	TINTZ	R/W	0h	PLL core soft reset

Copyright © 2025 Texas Instruments Incorporated

6.2.2.79 PLL_PER_TENABLE Register (Offset = 844h) [reset = X]

PLL_PER_TENABLE is shown in Figure 6-80 and described in Table 6-82.

Return to the Summary Table.

Figure 6-80. PLL_PER_TENABLE Register

31	30	29	28	27	26	25	24
RESERVED							
R/W-X							
23	22	21	20	19	18	17	16
RESERVED							
R/W-X							
15	14	13	12	11	10	9	8
RESERVED							
R/W-X							
7	6	5	4	3	2	1	0
RESERVED							TENABLE
R/W-X							R/W-0h

Table 6-82. PLL_PER_TENABLE Register Field Descriptions

Bit	Field	Type	Reset	Description
31-1	RESERVED	R/W	X	
0	TENABLE	R/W	0h	M, N. SD and SELFREQDCO latch (active rise edge)

Copyright © 2025 Texas Instruments Incorporated

6.2.2.80 PLL_PER_TENABLEDIV Register (Offset = 848h) [reset = X]

PLL_PER_TENABLEDIV is shown in Figure 6-81 and described in Table 6-83.

Return to the Summary Table.

Figure 6-81. PLL_PER_TENABLEDIV Register

31	30	29	28	27	26	25	24
RESERVED							
R/W-X							
23	22	21	20	19	18	17	16
RESERVED							
R/W-X							
15	14	13	12	11	10	9	8
RESERVED							
R/W-X							
7	6	5	4	3	2	1	0
RESERVED							TENABLEDIV
R/W-X							R/W-0h

Table 6-83. PLL_PER_TENABLEDIV Register Field Descriptions

Bit	Field	Type	Reset	Description
31-1	RESERVED	R/W	X	
0	TENABLEDIV	R/W	0h	M2 and N2 latch (active rise edge)

Copyright © 2025 Texas Instruments Incorporated

6.2.2.81 PLL_PER_M2NDIV Register (Offset = 84Ch) [reset = X]

PLL_PER_M2NDIV is shown in Figure 6-82 and described in Table 6-84.

Return to the Summary Table.

Figure 6-82. PLL_PER_M2NDIV Register

31	30	29	28	27	26	25	24	23	22	21	20	19	18	17	16	15	14	13	12	11	10	9	8	7	6	5	4	3	2	1	0
RESERVED									M2							RESERVED								N							
R/W-X									R/W-0h							R/W-X								R/W-0h							

Table 6-84. PLL_PER_M2NDIV Register Field Descriptions

Bit	Field	Type	Reset	Description
31-23	RESERVED	R/W	X	
22-16	M2	R/W	0h	Post-divider is REGM2
15-8	RESERVED	R/W	X	
7-0	N	R/W	0h	Pre-divider is REGN+1

Copyright © 2025 Texas Instruments Incorporated

6.2.2.82 PLL_PER_MN2DIV Register (Offset = 850h) [reset = X]

PLL_PER_MN2DIV is shown in Figure 6-83 and described in Table 6-85.

Return to the Summary Table.

Figure 6-83. PLL_PER_MN2DIV Register

31	30	29	28	27	26	25	24	23	22	21	20	19	18	17	16
RESERVED												N2			
R/W-X												R/W-0h			
15	14	13	12	11	10	9	8	7	6	5	4	3	2	1	0
RESERVED				M											
R/W-X				R/W-174h											

Table 6-85. PLL_PER_MN2DIV Register Field Descriptions

Bit	Field	Type	Reset	Description
31-20	RESERVED	R/W	X	
19-16	N2	R/W	0h	Bypass divider is REGN2+1
15-12	RESERVED	R/W	X	
11-0	M	R/W	174h	Feedback Multiplier is REGM

Copyright © 2025 Texas Instruments Incorporated

6.2.2.83 PLL_PER_FRACDIV Register (Offset = 854h) [reset = X]

PLL_PER_FRACDIV is shown in Figure 6-84 and described in Table 6-86.

Return to the Summary Table.

Figure 6-84. PLL_PER_FRACDIV Register

31	30	29	28	27	26	25	24	23	22	21	20	19	18	17	16
REGSD								RESERVED						FRACTIONALM	
R/W-8h								R/W-X						R/W-0h	
15	14	13	12	11	10	9	8	7	6	5	4	3	2	1	0
FRACTIONALM															
R/W-0h															

Table 6-86. PLL_PER_FRACDIV Register Field Descriptions

Bit	Field	Type	Reset	Description
31-24	REGSD	R/W	8h	Sigma-Delta Divider Should be set by s/w to provide optimum jitter performance. DPLL_SD_DIV = CEILING ([DPLL_MULT/ (DPLL_DIV+1)] * CLKINP/ 250), where CLKINP is the input clock of the DPLL in MHz
23-18	RESERVED	R/W	X	
17-0	FRACTIONALM	R/W	0h	Fractional part of the M divider.

Copyright © 2025 Texas Instruments Incorporated

6.2.2.84 PLL_PER_BWCTRL Register (Offset = 858h) [reset = X]

PLL_PER_BWCTRL is shown in Figure 6-85 and described in Table 6-87.

Return to the Summary Table.

Figure 6-85. PLL_PER_BWCTRL Register

31	30	29	28	27	26	25	24
RESERVED							
R/W-X							
23	22	21	20	19	18	17	16
RESERVED							
R/W-X							
15	14	13	12	11	10	9	8
RESERVED							
R/W-X							
7	6	5	4	3	2	1	0
RESERVED					BWCONTROL		BW_INCR_DECRZ
R/W-X					R/W-0h		R/W-0h

Table 6-87. PLL_PER_BWCTRL Register Field Descriptions

Bit	Field	Type	Reset	Description
31-3	RESERVED	R/W	X	
2-1	BWCONTROL	R/W	0h	Change Loop Bandwidth
0	BW_INCR_DECRZ	R/W	0h	Direction of Loop Bandwidth 0x0 : decrease BW 0x1 : increase BW

Copyright © 2025 Texas Instruments Incorporated

6.2.2.85 PLL_PER_FRACCTRL Register (Offset = 85Ch) [reset = 0h]

PLL_PER_FRACCTRL is shown in Figure 6-86 and described in Table 6-88.

Return to the Summary Table.

Figure 6-86. PLL_PER_FRACCTRL Register

31	30	29	28	27	26	25	24
DOWNSPREAD	ModFreqDividerExponent			ModFreqDividerMantissa			
R/W-0h	R/W-0h			R/W-0h			
23	22	21	20	19	18	17	16
ModFreqDividerMantissa			DeltaMStepInteger			DeltaMStepFraction	
R/W-0h			R/W-0h			R/W-0h	
15	14	13	12	11	10	9	8
DeltaMStepFraction							
R/W-0h							
7	6	5	4	3	2	1	0
DeltaMStepFraction							
R/W-0h							

Table 6-88. PLL_PER_FRACCTRL Register Field Descriptions

Bit	Field	Type	Reset	Description
31	DOWNSPREAD	R/W	0h	Controls frequency spread 0x0 : enables both side frequency spread about the programmed frequency. 0x1 : enables low frequency spread only
30-28	ModFreqDividerExponent	R/W	0h	Exponent of the REFCLK divider to define the modulation frequency.
27-21	ModFreqDividerMantissa	R/W	0h	Mantissa of the REFCLK divider to define the modulation frequency
20-18	DeltaMStepInteger	R/W	0h	Integer part of Frequency Spread control
17-0	DeltaMStepFraction	R/W	0h	The fraction part of Frequency Spread control

Copyright © 2025 Texas Instruments Incorporated

6.2.2.86 PLL_PER_STATUS Register (Offset = 860h) [reset = X]

PLL_PER_STATUS is shown in Figure 6-87 and described in Table 6-89.

Return to the Summary Table.

Figure 6-87. PLL_PER_STATUS Register

31	30	29	28	27	26	25	24
PONOUT	PGOODOUT	LDOPWDN	RECAL_BSTATUS3	RECAL_OPPIN	RESERVED		
R-1h	R-1h	R-0h	R-0h	R-0h	R-X		
23	22	21	20	19	18	17	16
RESERVED							
R-X							
15	14	13	12	11	10	9	8
RESERVED				CLKDCOLDOACK	PHASELOCK	FREQLOCK	BYPASSACK
R-X				R-0h	R-0h	R-0h	R-0h
7	6	5	4	3	2	1	0
STBYRETACK	LOSSREF	CLKOUTENACK	LOCK2	M2CHANGEACK	SSCACK	HIGHJITTER	BYPASS
R-0h	R-0h	R-1h	R-0h	R-0h	R-0h	R-0h	R-1h

Table 6-89. PLL_PER_STATUS Register Field Descriptions

Bit	Field	Type	Reset	Description
31	PONOUT	R	1h	Status of the weak power-switch 0x0 : indicates the/OFF status of the weak power-switch in digital to SOC. 0x1 : ndicates the ON status of the weak power-switch in digital to SOC.
30	PGOODOUT	R	1h	Status of the strong power-switch 0x0 : indicates the/OFF status of the strong power-switch in digital to SOC. 0x1 : ndicates the ON status of the strong power-switch in digital to SOC.
29	LDOPWDN	R	0h	1 indicates ADPLLLJ internal LDO is power down. VDDLDOOUT will be un-defined in this condition
28	RECAL_BSTATUS3	R	0h	Recalibration status flag. 1 ADPLLLJ requires recalibration
27	RECAL_OPPIN	R	0h	Recalibration status flag. 1 ADPLLLJ requires recalibration
26-12	RESERVED	R	X	
11	CLKDCOLDOACK	R	0h	Status on PHASELOCK output pin
10	PHASELOCK	R	0h	Status on PHASELOCK output pin
9	FREQLOCK	R	0h	Status on FREQLOCK output pin
8	BYPASSACK	R	0h	Status of BYPASSACK output pin
7	STBYRETACK	R	0h	Standby and retention status 0x0: indicates to SOC that all internal clocks in ADPLLLJ are active and it is starting the relock process. 0x1: indicates to SOC that all internal clocks in ADPLLLJ are gated and it is ready for retention.
6	LOSSREF	R	0h	Reference input loss
5	CLKOUTENACK	R	1h	Indicates the enable/disable condition of CLKOUTEN 0x0 = CLKOUT gating completed 0x1 = CLKOUT enabling completed
4	LOCK2	R	0h	ADPLL internal loop lock status

Copyright © 2025 Texas Instruments Incorporated

Table 6-89. PLL_PER_STATUS Register Field Descriptions (continued)

Bit	Field	Type	Reset	Description
3	M2CHANGEACK	R	0h	Acknowledge for change to M2 divider. Toggles from 1-0 or 0-1 (depending on current value) once CLKOUT frequency change has completed.
2	SSCACK	R	0h	Spread Spectrum status 0x0 : Spread-spectrum Clocking is disabled on output clocks 0x1 : Spread-spectrum Clocking is enabled on output clocks
1	HIGHJITTER	R	0h	1 indicates jitter. After PHASELOCK is asserted high, the HIGHJITTER flag is asserted high if phase error between REFCLK and FBCLK greater than 24%.
0	BYPASS	R	1h	Bypass status signal. 1 CLKOUT in bypass

Copyright © 2025 Texas Instruments Incorporated

6.2.2.87 PLL_PER_HSDIVIDER Register (Offset = 864h) [reset = X]

PLL_PER_HSDIVIDER is shown in Figure 6-88 and described in Table 6-90.

Return to the Summary Table.

Figure 6-88. PLL_PER_HSDIVIDER Register

31	30	29	28	27	26	25	24
RESERVED							
R/W-X							
23	22	21	20	19	18	17	16
RESERVED						LDOPWDNACK	BYPASSACKZ
R/W-X						R-0h	R-0h
15	14	13	12	11	10	9	8
RESERVED							
R/W-X							
7	6	5	4	3	2	1	0
RESERVED					TENABLEDIV	LDOPWDN	BYPASS
R/W-X					R/W-0h	R/W-0h	R/W-0h

Table 6-90. PLL_PER_HSDIVIDER Register Field Descriptions

Bit	Field	Type	Reset	Description
31-18	RESERVED	R/W	X	
17	LDOPWDNACK	R	0h	LDO Power Down Ack
16	BYPASSACKZ	R	0h	HSDIVIDER Bypass Ack
15-3	RESERVED	R/W	X	
2	TENABLEDIV	R/W	0h	Tenable Div
1	LDOPWDN	R/W	0h	LDO Power Down
0	BYPASS	R/W	0h	HSDIVIDER Bypass

Copyright © 2025 Texas Instruments Incorporated

6.2.2.88 PLL_PER_HSDIVIDER_CLKOUT0 Register (Offset = 868h) [reset = X]

PLL_PER_HSDIVIDER_CLKOUT0 is shown in Figure 6-89 and described in Table 6-91.

Return to the Summary Table.

Figure 6-89. PLL_PER_HSDIVIDER_CLKOUT0 Register

31	30	29	28	27	26	25	24
RESERVED							
R/W-X							
23	22	21	20	19	18	17	16
RESERVED							
R/W-X							
15	14	13	12	11	10	9	8
RESERVED			PWDN	RESERVED		STATUS	GATE_CTRL
R/W-X			R/W-0h	R/W-X		R-0h	R/W-0h
7	6	5	4	3	2	1	0
RESERVED		DIVCHACK	DIV				
R/W-X		R-0h	R/W-4h				

Table 6-91. PLL_PER_HSDIVIDER_CLKOUT0 Register Field Descriptions

Bit	Field	Type	Reset	Description
31-13	RESERVED	R/W	X	
12	PWDN	R/W	0h	Power down for HSDIVIDER M4 divider and hence CLKOUT0 output 0h (R/W) = CLKOUT0 divider active 1h (R/W) = CLKOUT0 divider is powered down
11-10	RESERVED	R/W	X	
9	STATUS	R	0h	HSDIVIDER CLKOUT0 status 0h (R) = The clock output is gated 1h (R) = The clock output is enabled
8	GATE_CTRL	R/W	0h	Control gating of HSDIVIDER CLKOUT0 0h (R/W) = Automatically gate this clock when there is no dependency for it 1h (R/W) = Force this clock to stay enabled even if there is no request
7-6	RESERVED	R/W	X	
5	DIVCHACK	R	0h	Toggle on this status bit after changing HSDIVIDER_CLKOUT0_DIV indicates that the change in divider value has taken effect
4-0	DIV	R/W	4h	DPLL post-divider factor, M4, for internal clock generation. Divide values from 1 to 31. 0h (R/W) = Reserved

Copyright © 2025 Texas Instruments Incorporated

6.2.2.89 PLL_PER_HSDIVIDER_CLKOUT1 Register (Offset = 86Ch) [reset = X]

PLL_PER_HSDIVIDER_CLKOUT1 is shown in Figure 6-90 and described in Table 6-92.

Return to the Summary Table.

Figure 6-90. PLL_PER_HSDIVIDER_CLKOUT1 Register

31	30	29	28	27	26	25	24
RESERVED							
R/W-X							
23	22	21	20	19	18	17	16
RESERVED							
R/W-X							
15	14	13	12	11	10	9	8
RESERVED			PWDN	RESERVED		STATUS	GATE_CTRL
R/W-X			R/W-0h	R/W-X		R-0h	R/W-0h
7	6	5	4	3	2	1	0
RESERVED		DIVCHACK	DIV				
R/W-X		R-0h	R/W-4h				

Table 6-92. PLL_PER_HSDIVIDER_CLKOUT1 Register Field Descriptions

Bit	Field	Type	Reset	Description
31-13	RESERVED	R/W	X	
12	PWDN	R/W	0h	Power down for HSDIVIDER M5 divider and hence CLKOUT1 output 0h (R/W) = CLKOUT1 divider active 1h (R/W) = CLKOUT1 divider is powered down
11-10	RESERVED	R/W	X	
9	STATUS	R	0h	HSDIVIDER CLKOUT1 status 0h (R) = The clock output is gated 1h (R) = The clock output is enabled
8	GATE_CTRL	R/W	0h	Control gating of HSDIVIDER CLKOUT1 0h (R/W) = Automatically gate this clock when there is no dependency for it 1h (R/W) = Force this clock to stay enabled even if there is no request
7-6	RESERVED	R/W	X	
5	DIVCHACK	R	0h	Toggle on this status bit after changing HSDIVIDER_CLKOUT1_DIV indicates that the change in divider value has taken effect
4-0	DIV	R/W	4h	DPLL post-divider factor, M5, for internal clock generation. Divide values from 1 to 31. 0h (R/W) = Reserved

Copyright © 2025 Texas Instruments Incorporated

6.2.2.90 PLL_PER_HSDIVIDER_CLKOUT2 Register (Offset = 870h) [reset = X]

PLL_PER_HSDIVIDER_CLKOUT2 is shown in Figure 6-91 and described in Table 6-93.

Return to the Summary Table.

Figure 6-91. PLL_PER_HSDIVIDER_CLKOUT2 Register

31	30	29	28	27	26	25	24
RESERVED							
R/W-X							
23	22	21	20	19	18	17	16
RESERVED							
R/W-X							
15	14	13	12	11	10	9	8
RESERVED			PWDN	RESERVED		STATUS	GATE_CTRL
R/W-X			R/W-0h	R/W-X		R-0h	R/W-0h
7	6	5	4	3	2	1	0
RESERVED		DIVCHACK	DIV				
R/W-X		R-0h	R/W-4h				

Table 6-93. PLL_PER_HSDIVIDER_CLKOUT2 Register Field Descriptions

Bit	Field	Type	Reset	Description
31-13	RESERVED	R/W	X	
12	PWDN	R/W	0h	Power down for HSDIVIDER M6 divider and hence CLKOUT2 output 0h (R/W) = CLKOUT2 divider active 1h (R/W) = CLKOUT2 divider is powered down
11-10	RESERVED	R/W	X	
9	STATUS	R	0h	HSDIVIDER CLKOUT2 status 0h (R) = The clock output is gated 1h (R) = The clock output is enabled
8	GATE_CTRL	R/W	0h	Control gating of HSDIVIDER CLKOUT2 0h (R/W) = Automatically gate this clock when there is no dependency for it 1h (R/W) = Force this clock to stay enabled even if there is no request
7-6	RESERVED	R/W	X	
5	DIVCHACK	R	0h	Toggle on this status bit after changing HSDIVIDER_CLKOUT2_DIV indicates that the change in divider value has taken effect
4-0	DIV	R/W	4h	DPLL post-divider factor, M6, for internal clock generation. Divide values from 1 to 31. 0h (R/W) = Reserved

Copyright © 2025 Texas Instruments Incorporated

6.2.2.91 PLL_PER_HSDIVIDER_CLKOUT3 Register (Offset = 874h) [reset = X]

PLL_PER_HSDIVIDER_CLKOUT3 is shown in Figure 6-92 and described in Table 6-94.

Return to the Summary Table.

Figure 6-92. PLL_PER_HSDIVIDER_CLKOUT3 Register

31	30	29	28	27	26	25	24
RESERVED							
R/W-X							
23	22	21	20	19	18	17	16
RESERVED							
R/W-X							
15	14	13	12	11	10	9	8
RESERVED			PWDN	RESERVED		STATUS	GATE_CTRL
R/W-X			R/W-0h	R/W-X		R-0h	R/W-0h
7	6	5	4	3	2	1	0
RESERVED		DIVCHACK	DIV				
R/W-X		R-0h	R/W-4h				

Table 6-94. PLL_PER_HSDIVIDER_CLKOUT3 Register Field Descriptions

Bit	Field	Type	Reset	Description
31-13	RESERVED	R/W	X	
12	PWDN	R/W	0h	Power down for HSDIVIDER M7 divider and hence CLKOUT3 output 0h (R/W) = CLKOUT3 divider active 1h (R/W) = CLKOUT3 divider is powered down
11-10	RESERVED	R/W	X	
9	STATUS	R	0h	HSDIVIDER CLKOUT3 status 0h (R) = The clock output is gated 1h (R) = The clock output is enabled
8	GATE_CTRL	R/W	0h	Control gating of HSDIVIDER CLKOUT3 0h (R/W) = Automatically gate this clock when there is no dependency for it 1h (R/W) = Force this clock to stay enabled even if there is no request
7-6	RESERVED	R/W	X	
5	DIVCHACK	R	0h	Toggle on this status bit after changing HSDIVIDER_CLKOUT3_DIV indicates that the change in divider value has taken effect
4-0	DIV	R/W	4h	DPLL post-divider factor, M7, for internal clock generation. Divide values from 1 to 31. 0h (R/W) = Reserved

Copyright © 2025 Texas Instruments Incorporated

6.2.2.92 PLL_DSP_RSTCTRL Register (Offset = 878h) [reset = X]

PLL_DSP_RSTCTRL is shown in Figure 6-93 and described in Table 6-95.

Return to the Summary Table.

Figure 6-93. PLL_DSP_RSTCTRL Register

31	30	29	28	27	26	25	24	23	22	21	20	19	18	17	16
RESERVED															
R/W-X															
15	14	13	12	11	10	9	8	7	6	5	4	3	2	1	0
RESERVED													assert		
R/W-X													R/W-0h		

Table 6-95. PLL_DSP_RSTCTRL Register Field Descriptions

Bit	Field	Type	Reset	Description
31-3	RESERVED	R/W	X	
2-0	assert	R/W	0h	SW Reset override for the PLL Write 3'b111 : Override is enabled and Reset is asserted

Copyright © 2025 Texas Instruments Incorporated

6.2.2.93 PLL_DSP_HSDIVIDER_RSTCTRL Register (Offset = 87Ch) [reset = X]

PLL_DSP_HSDIVIDER_RSTCTRL is shown in Figure 6-94 and described in Table 6-96.

Return to the Summary Table.

Figure 6-94. PLL_DSP_HSDIVIDER_RSTCTRL Register

31	30	29	28	27	26	25	24	23	22	21	20	19	18	17	16
RESERVED															
R/W-X															
15	14	13	12	11	10	9	8	7	6	5	4	3	2	1	0
RESERVED													assert		
R/W-X													R/W-0h		

Table 6-96. PLL_DSP_HSDIVIDER_RSTCTRL Register Field Descriptions

Bit	Field	Type	Reset	Description
31-3	RESERVED	R/W	X	
2-0	assert	R/W	0h	SW Reset override for the HSDIVIDER Write 3'b111 : Override is enabled and Reset is asserted

Copyright © 2025 Texas Instruments Incorporated

6.2.2.94 PLL_PER_RSTCTRL Register (Offset = 880h) [reset = X]

PLL_PER_RSTCTRL is shown in Figure 6-95 and described in Table 6-97.

Return to the Summary Table.

Figure 6-95. PLL_PER_RSTCTRL Register

31	30	29	28	27	26	25	24	23	22	21	20	19	18	17	16
RESERVED															
R/W-X															
15	14	13	12	11	10	9	8	7	6	5	4	3	2	1	0
RESERVED													assert		
R/W-X													R/W-0h		

Table 6-97. PLL_PER_RSTCTRL Register Field Descriptions

Bit	Field	Type	Reset	Description
31-3	RESERVED	R/W	X	
2-0	assert	R/W	0h	SW Reset override for the PLL Write 3'b111 : Override is enabled and Reset is asserted

Copyright © 2025 Texas Instruments Incorporated

6.2.2.95 PLL_PER_HSDIVIDER_RSTCTRL Register (Offset = 884h) [reset = X]

PLL_PER_HSDIVIDER_RSTCTRL is shown in Figure 6-96 and described in Table 6-98.

Return to the Summary Table.

Figure 6-96. PLL_PER_HSDIVIDER_RSTCTRL Register

31	30	29	28	27	26	25	24	23	22	21	20	19	18	17	16
RESERVED															
R/W-X															
15	14	13	12	11	10	9	8	7	6	5	4	3	2	1	0
RESERVED													assert		
R/W-X													R/W-0h		

Table 6-98. PLL_PER_HSDIVIDER_RSTCTRL Register Field Descriptions

Bit	Field	Type	Reset	Description
31-3	RESERVED	R/W	X	
2-0	assert	R/W	0h	SW Reset override for the HSDIVIDER Write 3'b111 : Override is enabled and Reset is asserted

Copyright © 2025 Texas Instruments Incorporated

6.2.2.96 ANA_REG_CLK_CTRL_REG1_XO_SLICER Register (Offset = C00h) [reset = 0h]

ANA_REG_CLK_CTRL_REG1_XO_SLICER is shown in Figure 6-97 and described in Table 6-99.

Return to the Summary Table.

Figure 6-97. ANA_REG_CLK_CTRL_REG1_XO_SLICER Register

31	30	29	28	27	26	25	24
OSC_CLKOUT_EN	OSC_CLKOUT_FREQ_SEL		OSC_CLKOUT_CLRZ_DIV	OSC_CLKOUT_DRV			
R/W-0h	R/W-0h		R/W-0h	R/W-0h			
23	22	21	20	19	18	17	16
RESERVED							
R/W-0h							
15	14	13	12	11	10	9	8
RESERVED			XTAL_DETECT_XO_SLICER	SLICER_DCCPL_XO_SLICER	SLICER_HIPWR_XO_SLICER	FASTCHARGEZ_BIAS_XO_SLICER	XOSC_DRIVE_XO_SLICER
R/W-0h			R/W-0h	R/W-0h	R/W-0h	R/W-0h	R/W-0h
7	6	5	4	3	2	1	0
XOSC_DRIVE_XO_SLICER				RTRIM_BIAS_XO_SLICER			
R/W-0h				R/W-0h			

Table 6-99. ANA_REG_CLK_CTRL_REG1_XO_SLICER Register Field Descriptions

Bit	Field	Type	Reset	Description
31	OSC_CLKOUT_EN	R/W	0h	OSC_CLKOUT Enable Enables the Slicer clock to drive the OSC_CLKOUT output buffer. It is recommended that this bit be activated as the last step after fields OSC_CLKOUT_DRV, OSC_CLKOUT_CLRZ_DIV, and OSC_CLKOUT_FREQ_SEL have been configured. 0 = Clock Disabled 1 = Clock Enabled 0x00 = Functional Reset
30-29	OSC_CLKOUT_FREQ_SEL	R/W	0h	OSC_CLKOUT Frequency Selection Selects the output frequency as a division of the XTAL (or externally driven CLKP) frequency. x0 = XTAL/2 10 = XTAL/1 11 = XTAL/4 0x00 = Functional Reset
28	OSC_CLKOUT_CLRZ_DIV	R/W	0h	OSC_CLKOUT Divider ClearZ This active low signal permits the output frequency dividers to be properly cleared before enabling. 0 = All dividers cleared 1 = Normal divider function enabled 0x1 = Functional Reset
27-24	OSC_CLKOUT_DRV	R/W	0h	OSC_CLKOUT Drive This bit controls the drive strength of the OSC_CLKOUT buffer. 4'b0000 = No Test Output, Hi-Z Output Drive Ctrl = [4/9X][2/9X][2/9X][1/9X] 0xF = Functional Reset
23-13	RESERVED	R/W	0h	Reserved Reads return 0x0 and writes have no effect. 0x0 = Functional Reset

Copyright © 2025 Texas Instruments Incorporated

Table 6-99. ANA_REG_CLK_CTRL_REG1_XO_SLICER Register Field Descriptions (continued)

Bit	Field	Type	Reset	Description
12	XTAL_DETECT_XO_SLICER	R/W	0h	XTAL Detect Enable This bit connects a pullup and sense circuitry to CLKM to detect the presence or absence of a crystal. This operation will conflict with oscillator functionality, so this bit must be asserted only when the oscillator is disabled (CTRL_CLKTOP_REG1 bit 2 must be "0"). After asserted, the internal XTAL_SENSE signal will reflect a "1" if a crystal is present (CLKM sees a high impedance) or "0" if CLKM is tied to ground. After the sense operation is detected, this bit must be cleared before the oscillator will function properly if enabled. 0 = Normal operation (pullup and sense circuitry are disconnected from CLKM, XTAL_SENSE outputs "1") 1 = XTAL sense function enabled (pullup and sense circuitry connected to CLKM, output of XTAL_SENSE reads "1" if high impedance, "0" if CLKM is tied to ground) 0x0 = Functional Reset
11	SLICER_DCCPL_XO_SLICER	R/W	0h	Slicer DC-Coupled Mode 0 = Normal operation (AC-couple CLKP to internal slicer) 1 = DC-couple CLKP to internal slicer to CLKP 0x0 = Functional Reset
10	SLICER_HIPWR_XO_SLICER	R/W	0h	Slicer High-power Mode This bit bypasses the input clock slicer current-starving/filtering circuitry to increase gain and reduce device phase-noise at the expense of power and reduced supply noise rejection. This permits the use of a high-speed external test clock (660MHz max). 0 = Normal operation (current-limiting present) 1 = High-power/high-speed test mode 0x0 = Functional Reset
9	FASTCHARGEZ_BIAS_XO_SLICER	R/W	0h	Bias Fast-charge Enable (Active Low) This bit bypasses the RC filtering on the XOSC/SLICER Bias to permit more rapid power-up. 0 = Bias fast-charge 1 = Normal operation (filtering present) 0x1 = Functional Reset
8-4	XOSC_DRIVE_XO_SLICER	R/W	0h	Crystal Oscillator Output Drive Binary-weighted oscillator drive control 0x0 = Functional Reset
3-0	RTRIM_BIAS_XO_SLICER	R/W	0h	Crystal Oscillator and Slicer Bias RTrim Binary-weighted bias control 0x0 = Functional Reset

Copyright © 2025 Texas Instruments Incorporated

6.2.2.97 ANA_REG_CLK_CTRL_REG1_CLKTOP Register (Offset = C04h) [reset = 7h]

ANA_REG_CLK_CTRL_REG1_CLKTOP is shown in Figure 6-98 and described in Table 6-100.

Return to the Summary Table.

Figure 6-98. ANA_REG_CLK_CTRL_REG1_CLKTOP Register

31	30	29	28	27	26	25	24
RESERVED							
R/W-0h							
23	22	21	20	19	18	17	16
RESERVED							
R/W-0h							
15	14	13	12	11	10	9	8
RESERVED							
R/W-0h							
7	6	5	4	3	2	1	0
RESERVED					ENABLE_XOSC	ENABLE_SLICER_CLKP	ENABLE_BIAS_XO_SLICER
R/W-0h					R/W-1h	R/W-1h	R/W-1h

Table 6-100. ANA_REG_CLK_CTRL_REG1_CLKTOP Register Field Descriptions

Bit	Field	Type	Reset	Description
31-3	RESERVED	R/W	0h	Reserved Reads return 0x0 and writes have no effect. 0x0 = Functional Reset
2	ENABLE_XOSC	R/W	1h	Enable Crystal Oscillator 0 = Disabled 1 = Enabled 0x1 = Functional Reset
1	ENABLE_SLICER_CLKP	R/W	1h	Enable CLKP Input Slicer 0 = Disabled 1 = Enabled 0x1 = Functional Reset
0	ENABLE_BIAS_XO_SLICER	R/W	1h	Enable Bias for Crystal Oscillator and Slicer 0 = Disabled 1 = Enabled 0x1 = Functional Reset

Copyright © 2025 Texas Instruments Incorporated

6.2.2.98 ANA_REG_CLK_CTRL_REG2_CLKTOP Register (Offset = C08h) [reset = 0h]

ANA_REG_CLK_CTRL_REG2_CLKTOP is shown in Figure 6-99 and described in Table 6-101.

Return to the Summary Table.

Figure 6-99. ANA_REG_CLK_CTRL_REG2_CLKTOP Register

31	30	29	28	27	26	25	24
CTRL_DC_BIST_BUFEN	RESERVED						
R/W-0h	R/W-0h						
23	22	21	20	19	18	17	16
RESERVED							
R/W-0h							
15	14	13	12	11	10	9	8
RESERVED							
R/W-0h							
7	6	5	4	3	2	1	0
RESERVED							
R/W-0h							

Table 6-101. ANA_REG_CLK_CTRL_REG2_CLKTOP Register Field Descriptions

Bit	Field	Type	Reset	Description
31	CTRL_DC_BIST_BUFEN	R/W	0h	Disable for CLK_TOP DC BIST BUFFER 0 =CLK TOP DC BIST BUFFER ENABLED 1 = CLK TOP DC BIST BUFFER DISABLED 0x0 = Functional Reset
30-0	RESERVED	R/W	0h	Reserved Reads return 0x0 and writes have no effect. 0x0 = Functional Reset

Copyright © 2025 Texas Instruments Incorporated

6.2.2.99 ANA_REG_CLK_CTRL_REG1_LDO_CLKTOP Register (Offset = C0Ch) [reset = 1h]

ANA_REG_CLK_CTRL_REG1_LDO_CLKTOP is shown in Figure 6-100 and described in Table 6-102.

Return to the Summary Table.

Figure 6-100. ANA_REG_CLK_CTRL_REG1_LDO_CLKTOP Register

31	30	29	28	27	26	25	24
RESERVED							
R/W-0h							
23	22	21	20	19	18	17	16
RESERVED							
R/W-0h							
15	14	13	12	11	10	9	8
RESERVED							
R/W-0h							
7	6	5	4	3	2	1	0
CLK_BIST_DISABLE_LDO	RESERVED						EN_SLICER_LDO
R/W-0h	R/W-0h						R/W-1h

Table 6-102. ANA_REG_CLK_CTRL_REG1_LDO_CLKTOP Register Field Descriptions

Bit	Field	Type	Reset	Description
31-8	RESERVED	R/W	0h	Reserved Reads return 0x0 and writes have no effect. 0x0 = Functional Reset
7	CLK_BIST_DISABLE_LDO	R/W	0h	DC BIST Disable for LDO 0 = Normal operation of DC BIST 1 = DC BIST Disabled 0x0 = Functional Reset
6-1	RESERVED	R/W	0h	Reserved Reads return 0x0 and writes have no effect. 0x0 = Functional Reset
0	EN_SLICER_LDO	R/W	1h	Slicer LDO Enable 0 = Slicer LDO Disabled 1 = Slicer LDO Enabled 0x1 = Functional Reset

Copyright © 2025 Texas Instruments Incorporated

6.2.2.100 ANA_REG_CLK_CTRL_REG2_LDO_CLKTOP Register (Offset = C10h) [reset = 00400710h]

ANA_REG_CLK_CTRL_REG2_LDO_CLKTOP is shown in Figure 6-101 and described in Table 6-103.

Return to the Summary Table.

Figure 6-101. ANA_REG_CLK_CTRL_REG2_LDO_CLKTOP Register

31	30	29	28	27	26	25	24
RESERVED							
R/W-0h							
23	22	21	20	19	18	17	16
BISTMUX_CTRL				TESTMUX_CTRL			
R/W-4h				R/W-0h			
15	14	13	12	11	10	9	8
TLOAD_CTRL			ENABLE_PMOS_PULLDOWN	SCPRT_IBIAS_CTRL	LDO_BW_CTRL		
R/W-0h			R/W-0h	R/W-0h	R/W-7h		
7	6	5	4	3	2	1	0
EN_BYPASS	EN_SHRT_CKT	EN_TEST_MODE	ENZ_LOW_BW_CAP	LDO_VOUT_CTRL			
R/W-0h	R/W-0h	R/W-0h	R/W-1h	R/W-0h			

Table 6-103. ANA_REG_CLK_CTRL_REG2_LDO_CLKTOP Register Field Descriptions

Bit	Field	Type	Reset	Description
31-24	RESERVED	R/W	0h	Reserved Reads return 0x0 and writes have no effect. 0x0 = Functional Reset
23-20	BISTMUX_CTRL	R/W	4h	SLICER LDO BIST MUX CONTROL (ONE HOT) Analog MUX enables to BIST output port 0000 = HI-Z Output 0001 = VBG_0P9*10/9 =1.0 V 0010 = VDD18*0.5 = 0.9V 0100 = VLDO Output * 0.6 1000 = Floating WARNING: Enabling more than one bit may damage the device 0x4 = Functional Reset
19-16	TESTMUX_CTRL	R/W	0h	SLICER LDO TEST MUX CONTROL (ONE HOT) Analog MUX enables to test output port 0000 = HI-Z Output 0001 = 0.6 * VLDO_OUT 0010 = VDD18*0.5 = 0.9V 0100 = VSSA 1000 = LDO Test Current (12.5uA) WARNING: Enabling more than one bit may damage the device 0x0 = Functional Reset
15-13	TLOAD_CTRL	R/W	0h	SLICER LDO TLOAD CONTROL updated description needed 0x0 = Functional Reset
12	ENABLE_PMOS_PULLDOWN	R/W	0h	SLICER LDO PMOS PULL DOWN ENABLE 0 = Slicer LDO PMOS Pull Down disabled 1 = Slicer LDO PMOS Pull Down enabled 0x0 = Functional Reset
11	SCPRT_IBIAS_CTRL	R/W	0h	SLICER LDO SHORT CKT PROTECTION IBIAS CONTROL 0 = Nominal short circuit bias with nominal short circuit current limit 1 = 2X Nominal short circuit bias with higher short circuit current limit 0x0 = Functional Reset
10-8	LDO_BW_CTRL	R/W	7h	SLICER LDO BANDWIDTH CONTROL need updated description 0x7 = Functional Reset
7	EN_BYPASS	R/W	0h	SLICER LDO BYPASS ENABLE 0 = Slicer LDO in normal mode 1 = Slicer LDO Bypassed with external voltage 0x0 = Functional Reset

Copyright © 2025 Texas Instruments Incorporated

Table 6-103. ANA_REG_CLK_CTRL_REG2_LDO_CLKTOP Register Field Descriptions (continued)

Bit	Field	Type	Reset	Description
6	EN_SHRT_CKT	R/W	0h	SLICER LDO SHORT CKT PROTECTION ENABLE 0 = Slicer LDO Short Ckt Protection Disabled 1 = Slicer LDO Short Ckt Protection Enabled 0x0= Functional Reset
5	EN_TEST_MODE	R/W	0h	SLICER LDO TEST MODE ENABLE 0 = Slicer LDO TEST MODE Disabled 1 = Slicer LDO TEST MODE Enabled 0x0 = Functional Reset
4	ENZ_LOW_BW_CAP	R/W	1h	SLICER LDO LOW BW MODE DISABLE 1 = Slicer LDO Low BW mode Enabled 0 = Slicer LDO Low BW mode Disabled 0x1 = Functional Reset
3-0	LDO_VOUT_CTRL	R/W	0h	SLICER LDO VOUT TRIM NEEDS updated description 0x0 = Functional Reset

Copyright © 2025 Texas Instruments Incorporated

6.2.2.101 ANA_REG_CLK_STATUS_REG Register (Offset = C18h) [reset = 0h]

ANA_REG_CLK_STATUS_REG is shown in Figure 6-102 and described in Table 6-104.

Return to the Summary Table.

Figure 6-102. ANA_REG_CLK_STATUS_REG Register

31	30	29	28	27	26	25	24
RESERVED							
R-0h							
23	22	21	20	19	18	17	16
RESERVED							
R-0h							
15	14	13	12	11	10	9	8
RESERVED							
R-0h							
7	6	5	4	3	2	1	0
RESERVED							SLICER_LDO_SC_OUT
R-0h							R-0h

Table 6-104. ANA_REG_CLK_STATUS_REG Register Field Descriptions

Bit	Field	Type	Reset	Description
31-1	RESERVED	R	0h	Reserved Reads return 0x0 and writes have no effect.
0	SLICER_LDO_SC_OUT	R	0h	SLICER LDO SHORT CIRCUIT INDICATOR 0 = Normal operation 1 = LDO Output Short Circuit Detected

Copyright © 2025 Texas Instruments Incorporated

6.2.2.102 ANA_REG_REFSYS_CTRL_REG_LOWV Register (Offset = C1Ch) [reset = 022080D3h]

ANA_REG_REFSYS_CTRL_REG_LOWV is shown in Figure 6-103 and described in Table 6-105.

Return to the Summary Table.

Figure 6-103. ANA_REG_REFSYS_CTRL_REG_LOWV Register

31	30	29	28	27	26	25	24
RESERVED	FTRIM_3_0				RESERVED	IDIODE_EN	REFSYS_V2I_BYPASS_EN
R/W-0h	R/W-0h				R/W-0h	R/W-1h	R/W-0h
23	22	21	20	19	18	17	16
TX_TOP_IBIAS_EN	LODIST_IBIAS_EN	CLKTOP_IBIAS_EN	V2I_STARTUP	BGAP_ISW	IREF_TRIM_4_0		
R/W-0h	R/W-0h	R/W-1h	R/W-0h	R/W-0h	R/W-2h		
15	14	13	12	11	10	9	8
IREF_TRIM_4_0		MAG_TRIM_4_0					SLOPE_TRIM_4_0
R/W-2h		R/W-0h					R/W-Dh
7	6	5	4	3	2	1	0
SLOPE_TRIM_4_0				REFSYS_PRE_CHARGE	REFSYS_CAP_SW_CTRLZ	REFSYS_V2I_EN_CTRL	REFSYS_BGAP_EN_CTRL
R/W-Dh				R/W-0h	R/W-0h	R/W-1h	R/W-1h

Table 6-105. ANA_REG_REFSYS_CTRL_REG_LOWV Register Field Descriptions

Bit	Field	Type	Reset	Description
31	RESERVED	R/W	0h	Reserved 0x0 = Functional Reset
30-27	FTRIM_3_0	R/W	0h	Filter TRIM Control 0x0 = Functional Reset
26	RESERVED	R/W	0h	<7> Unused 0x0 = Functional Reset
25	IDIODE_EN	R/W	1h	<6> Idiode Active Low Control --> Unused in TPR, Reserved for AWR <0> - Enable <1> - Disable 0x0= Functional Reset
24	REFSYS_V2I_BYPASS_EN	R/W	0h	<5> REFSYS V2I By-Pass Enable 0x0 = Functional Reset
23	TX_TOP_IBIAS_EN	R/W	0h	<4> TX TOP IBIAS EN--> Unused in TPR, Reserved for AWR 0x1 = Functional Reset
22	LODIST_IBIAS_EN	R/W	0h	<3> LO DIST BIAS EN --> Unused in TPR, Reserved for AWR 0x1 = Functional Reset
21	CLKTOP_IBIAS_EN	R/W	1h	<2> CLK TOP IBIAS EN 0x1 = Functional Reset
20	V2I_STARTUP	R/W	0h	<1> V2I Startup 0x0 = Functional Reset
19	BGAP_ISW	R/W	0h	<0> BGAP ISW STARTUP 0x0 = Functional Reset
18-14	IREF_TRIM_4_0	R/W	2h	Default Resistor Trim for NOM LOT 0x02 = Functional Reset
13-9	MAG_TRIM_4_0	R/W	0h	Default Magnitude Trim for NOM LOT 0x00 = Functional Reset
8-4	SLOPE_TRIM_4_0	R/W	Dh	Default Slope Trim for NOM LOT 0x0D = Functional Reset
3	REFSYS_PRE_CHARGE	R/W	0h	REFSYS Pre Charge Control 0 = Disable Pre Charge Block 1 = Enable Pre Charge Block 0x0 = Functional Reset
2	REFSYS_CAP_SW_CTRLZ	R/W	0h	REFSYS Cap Switch Control 0 = Switch External Cap to reference output 1 = Disconnect External Cap to Reference output 0x0 = Functional Reset

Copyright © 2025 Texas Instruments Incorporated

Table 6-105. ANA_REG_REFSYS_CTRL_REG_LOWV Register Field Descriptions (continued)

Bit	Field	Type	Reset	Description
1	REFSYS_V2I_EN_CTRL	R/W	1h	REFSYS Enable Control 0 = Disable V2I REFSYS 1 = Enable V2I REFSYS 0x1 = Functional Reset
0	REFSYS_BGAP_EN_CTRL	R/W	1h	REFSYS Enable Control 0 = Disable REFSYS 1 = Enable REFSYS 0x1 = Functional Reset

Copyright © 2025 Texas Instruments Incorporated

6.2.2.103 ANA_REG_REFSYS_TMUX_CTRL_LOWV Register (Offset = C20h) [reset = 0h]

ANA_REG_REFSYS_TMUX_CTRL_LOWV is shown in Figure 6-104 and described in Table 6-106.

Return to the Summary Table.

Figure 6-104. ANA_REG_REFSYS_TMUX_CTRL_LOWV Register

31	30	29	28	27	26	25	24
REFSYS_CTRL_8	RESERVED						
R/W-0h	R/W-0h						
23	22	21	20	19	18	17	16
RESERVED							
R/W-0h							
15	14	13	12	11	10	9	8
LO_IBIASP_20u	TX_IBIASP_20u	BYPASS_MIRR_VPBIAS	I2V_SENSE	VSSA_REF	IREFP_10UA	IDIODEP_100U	RESERVED
R/W-0h	R/W-0h	R/W-0h	R/W-0h	R/W-0h	R/W-0h	R/W-0h	R/W-0h
7	6	5	4	3	2	1	0
IBIASP_TS_6U	IBIASP_20U	RESERVED	VBE_WEAK	RESERVED	VBG_1P22V	VREF_0P9V	VREF_0P45V
R/W-0h	R/W-0h	R/W-0h	R/W-0h	R/W-0h	R/W-0h	R/W-0h	R/W-0h

Table 6-106. ANA_REG_REFSYS_TMUX_CTRL_LOWV Register Field Descriptions

Bit	Field	Type	Reset	Description
31	REFSYS_CTRL_8	R/W	0h	REFSYS Test Mux Enable. Other bits in Bus are One-hot. This control enabled in sync with other one hot control bits in Reg 0 = TMUX Disabled 1 = TMUX Enabled 0x0 = Functional Reset
30-16	RESERVED	R/W	0h	Reserved Reads return 0x0 and writes have no effect. 0x0000 = Functional Reset
15	LO_IBIASP_20u	R/W	0h	<15> LO IBG BIASP 20uA (TMUX One-Hot) 0x0 = Functional Reset
14	TX_IBIASP_20u	R/W	0h	<14> TX IBG BIASP 20uA (TMUX One-Hot) 0x0 = Functional Reset
13	BYPASS_MIRR_VPBIAS	R/W	0h	VPBIAS Control for IREF Gen Test Mode V2I By-Pass Feature 0x0 = Functional Reset
12	I2V_SENSE	R/W	0h	Sense Voltage from the BIST I2V cinversion of 20u and 6u bias current paths Sense voltage of 1V for BIST select<6> Sense voltage of 0.3V for BIST select<7> 0x0 = Functional Reset
11	VSSA_REF	R/W	0h	<11> VSSA REF (TMUX One-Hot) 0x0 = Functional Reset
10	IREFP_10UA	R/W	0h	<10> IREFP 10uA (TMUX One-Hot) 0x0 = Functional Reset
9	IDIODEP_100U	R/W	0h	<9> Idiode BIASP 100uA (TMUX One-Hot) 0x0 = Functional Reset
8	RESERVED	R/W	0h	Unused 0x0 = Functional Reset
7	IBIASP_TS_6U	R/W	0h	<7> IBG BIASP TS 6uA (TMUX One-Hot) 0x0 = Functional Reset
6	IBIASP_20U	R/W	0h	<6> CLK IBG BIASP 20uA (TMUX One-Hot) 0x0 = Functional Reset
5	RESERVED	R/W	0h	Unused 0x0 = Functional Reset
4	VBE_WEAK	R/W	0h	<4> - VBE Weak (TMUX One-Hot) 0x0 = Functional Reset
3	RESERVED	R/W	0h	Unused 0x0 = Functional Reset
2	VBG_1P22V	R/W	0h	<2> - VBG 1.22V (TMUX One-Hot) 0x0 = Functional Reset

Copyright © 2025 Texas Instruments Incorporated

Table 6-106. ANA_REG_REFSYS_TMUX_CTRL_LOWV Register Field Descriptions (continued)

Bit	Field	Type	Reset	Description
1	VREF_0P9V	R/W	0h	<1> - VREF 0P9V (Cap Node) (TMUX One-Hot) 0x0 = Functional Reset
0	VREF_0P45V	R/W	0h	<0> - VREF 0P45 (TMUX One-Hot) 0x0 = Functional Reset

Copyright © 2025 Texas Instruments Incorporated

6.2.2.104 ANA_REG_REFSYS_SPARE_REG_LOWV Register (Offset = C24h) [reset = 0h]

ANA_REG_REFSYS_SPARE_REG_LOWV is shown in Figure 6-105 and described in Table 6-107.

Return to the Summary Table.

Figure 6-105. ANA_REG_REFSYS_SPARE_REG_LOWV Register

31	30	29	28	27	26	25	24
ANALOGTEST_TMUX_ESD_CTRL	REFSYS_SPARE_30_22						
R/W-0h	R/W-0h						
23	22	21	20	19	18	17	16
REFSYS_SPARE_30_22		VDD_OV_RSET_EN	VDD_UV_RSET_EN	VDDA_OSC_UV_RSET_EN	VIOIN_UV_RSET_EN	VDD_OV_SR_SEL	
R/W-0h		R/W-0h	R/W-0h	R/W-0h	R/W-0h	R/W-0h	
15	14	13	12	11	10	9	8
VDD_OV_IR_DROP_COMP_SEL		RESERVED	VDDS_3P3V_UV_SELF_TEST_SEL	RESERVED	VDDA_OSC_UV_SELF_TEST_SEL	VDD_OV_SELF_TEST_SEL	VDD_UV_SELF_TEST_SEL
R/W-0h		R/W-0h	R/W-0h	R/W-0h	R/W-0h	R/W-0h	R/W-0h
7	6	5	4	3	2	1	0
VDD_SR_SEL		VDDA_OSC_IR_DROP_COMP_SEL		VDDS_3P3V_IR_DROP_COMP_SEL		VDD_IR_DROP_COMP_SEL	
R/W-0h		R/W-0h		R/W-0h		R/W-0h	

Table 6-107. ANA_REG_REFSYS_SPARE_REG_LOWV Register Field Descriptions

Bit	Field	Type	Reset	Description
31	ANALOGTEST_TMUX_ESD_CTRL	R/W	0h	ANALOGTEST TMUX ESD CTRL in Pad-Frame (formerly RX_REFSYS_TMUX_SPARE_CTRL_LOWV<31> in AWR/IWR devices, but RX does not exist in TPR) 0x0 = Functional Reset
30-22	REFSYS_SPARE_30_22	R/W	0h	Reserved Reads return 0x0 and writes have no effect. 0x000 = Functional Reset
21	VDD_OV_RSET_EN	R/W	0h	If asserted, VDD_OV will automatically reset the device through hardware control. Otherwise, UV flag will propagate to the digital where the CPU will need to take action. 0x0 = Functional Reset
20	VDD_UV_RSET_EN	R/W	0h	If asserted, VDD_UV will automatically reset the device through hardware control. Otherwise, UV flag will propagate to the digital where the CPU will need to take action. 0x0 = Functional Reset
19	VDDA_OSC_UV_RSET_EN	R/W	0h	If asserted, VDDA_OSC_UV will automatically reset the device through hardware control. Otherwise, UV flag will propagate to the digital where the CPU will need to take action. 0x0 = Functional Reset
18	VIOIN_UV_RSET_EN	R/W	0h	If asserted, VIOIN_UV will automatically reset the device through hardware control. Otherwise, UV flag will propagate to the digital where the CPU will need to take action. 0x0 = Functional Reset
17-16	VDD_OV_SR_SEL	R/W	0h	Final level of VDD 1.2V VMON OV Reference Selection See definition in REFSYS_SPARE_REG<15:14> 0x0 = Functional Reset

Copyright © 2025 Texas Instruments Incorporated

Table 6-107. ANA_REG_REFSYS_SPARE_REG_LOWV Register Field Descriptions (continued)

Bit	Field	Type	Reset	Description
15-14	VDD_OV_IR_DROP_COMP_SEL	R/W	0h	VDD 1.2V VMON OV Reference Selection Reference selection is dependent on REFSYS_SPARE_REG<17:16> programming If REFSYS_SPARE_REG<17:16> = 0x0 0x0 = 0.68V 0x1 = 0.67V 0x2 = 0.66V 0x3 = 0.65V If REFSYS_SPARE_REG<17:16> = 0x1 0x0 = 0.65V 0x1 = 0.64V 0x2 = 0.63V 0x3 = 0.62V If REFSYS_SPARE_REG<17:16> = 0x2 0x0 = 0.62V 0x1 = 0.61V 0x2 = 0.6V 0x3 = 0.59V If REFSYS_SPARE_REG<17:16> = 0x3 0x0 = 0.59V 0x1 = 0.58V 0x2 = 0.57V 0x3 = 0.56V 0x0 = Functional Reset
13	RESERVED	R/W	0h	Reserved Reserved in case VIOIN OV VMON and self test is ever implemented 0x0 = Functional Reset
12	VDDS_3P3V_UV_SELF_TEST_SEL	R/W	0h	Enable VIOIN Strict UV VMON Self Test If Self-test mode is enabled, VIOIN UV VMON reference is programmed as follows for REFSYS_SPARE_REG<3:2>: 0x0 = 0.66V 0x1 = 0.64V 0x2 = 0.62V 0x3 = 0.6V 0x0 = Functional Reset
11	RESERVED	R/W	0h	Reserved Reserved in case VDDA_OSC OV VMON and self test is ever implemented 0x0 = Functional Reset
10	VDDA_OSC_UV_SELF_TEST_SEL	R/W	0h	Enable VDDA_OSC Strict UV VMON Self Test If Self-test mode is enabled, VDDA_OSC UV VMON reference is programmed as follows for REFSYS_SPARE_REG<5:4>: 0x0 = 0.66V 0x1 = 0.64V 0x2 = 0.62V 0x3 = 0.6V 0x0 = Functional Reset
9	VDD_OV_SELF_TEST_SEL	R/W	0h	Enable 1.2V VDD Strict OV VMON Self Test If Self-test mode is enabled, VDD 1.2V VMON OV reference is programmed based on REFSYS_SPARE_REG<1:0> as follows: If REFSYS_SPARE_REG<7:6> = 0x0, REFSYS_SPARE_REG<1:0>: 0x0 = 0.58V 0x1 = 0.57V 0x2 = 0.56V 0x3 = 0.55V If REFSYS_SPARE_REG<7:6> = 0x1, REFSYS_SPARE_REG<1:0>: 0x0 = 0.55V 0x1 = 0.54V 0x2 = 0.53V 0x3 = 0.52V If REFSYS_SPARE_REG<7:6> = 0x2, REFSYS_SPARE_REG<1:0>: 0x0 = 0.53V 0x1 = 0.52V 0x2 = 0.51V 0x3 = 0.5V If REFSYS_SPARE_REG<7:6> = 0x3, REFSYS_SPARE_REG<1:0>: 0x0 = 0.51V 0x1 = 0.5V 0x2 = 0.49V 0x3 = 0.48V 0x0 = Functional Reset
8	VDD_UV_SELF_TEST_SEL	R/W	0h	Enable 1.2V VDD Strict UV VMON Self Test If Self-test mode is enabled, VDD 1.2V VMON UV reference is programmed based on REFSYS_SPARE_REG<15:14> as follows: If REFSYS_SPARE_REG<17:16> = 0x0, REFSYS_SPARE_REG<15:14>: 0x0 = 0.68V 0x1 = 0.67V 0x2 = 0.66V 0x3 = 0.65V If REFSYS_SPARE_REG<17:16> = 0x1, REFSYS_SPARE_REG<15:14>: 0x0 = 0.65V 0x1 = 0.64V 0x2 = 0.63V 0x3 = 0.62V If REFSYS_SPARE_REG<17:16> = 0x2, REFSYS_SPARE_REG<15:14>: 0x0 = 0.62V 0x1 = 0.61V 0x2 = 0.6V 0x3 = 0.59V If REFSYS_SPARE_REG<17:16> = 0x3, REFSYS_SPARE_REG<15:14>: 0x0 = 0.59V 0x1 = 0.58V 0x2 = 0.57V 0x3 = 0.56V 0x0 = Functional Reset
7-6	VDD_SR_SEL	R/W	0h	Final level of VDD 1.2V VMON UV Reference Selection See definition in REFSYS_SPARE_REG<1:0> 0x0 = Functional Reset
5-4	VDDA_OSC_IR_DROP_COMP_SEL	R/W	0h	VDDA_OSC UV VMON Reference Selection 0x0 = 0.56V 0x1 = 0.54V 0x2 = 0.52V 0x3 = 0.5V 0x0 = Functional Reset

Copyright © 2025 Texas Instruments Incorporated

Table 6-107. ANA_REG_REFSYS_SPARE_REG_LOWV Register Field Descriptions (continued)

Bit	Field	Type	Reset	Description
3-2	VDDS_3P3V_IR_DROP_COMP_SEL	R/W	0h	VIOIN VMON UV Reference Selection 0x0 = 0.56V 0x1 = 0.54V 0x2 = 0.52V 0x3 = 0.5V 0x0 = Functional Reset
1-0	VDD_IR_DROP_COMP_SEL	R/W	0h	VDD 1.2V VMON UV Reference Selection Reference selection is dependent on REFSYS_SPARE_REG<7:6> programming If REFSYS_SPARE_REG<7:6> = 0x0 0x0 = 0.58V 0x1 = 0.57V 0x2 = 0.56V 0x3 = 0.55V If REFSYS_SPARE_REG<7:6> = 0x1 0x0 = 0.55V 0x1 = 0.54V 0x2 = 0.53V 0x3 = 0.52V If REFSYS_SPARE_REG<7:6> = 0x2 0x0 = 0.53V 0x1 = 0.52V 0x2 = 0.51V 0x3 = 0.5V If REFSYS_SPARE_REG<7:6> = 0x3 0x0 = 0.51V 0x1 = 0.5V 0x2 = 0.49V 0x3 = 0.48V 0x0 = Functional Reset

Copyright © 2025 Texas Instruments Incorporated

6.2.2.105 ANA_REG_WU_CTRL_REG_LOWV Register (Offset = C28h) [reset = 6036825Dh]

ANA_REG_WU_CTRL_REG_LOWV is shown in Figure 6-106 and described in Table 6-108.

Return to the Summary Table.

Figure 6-106. ANA_REG_WU_CTRL_REG_LOWV Register

31	30	29	28	27	26	25	24
RESERVED	WU_SPARE_IN_2		WU_VDD_OV_VMON_EN	WU_VDD_UV_VMON_EN	WU_VDDA_OSC_UV_VMON_EN	WU_VDDS_3P3V_UV_VMON_EN	WU_SPARE_IN
R/W-0h	R/W-3h		R/W-0h	R/W-0h	R/W-0h	R/W-0h	R/W-0h
23	22	21	20	19	18	17	16
WU_SPARE_IN	WU_SUPP_DET_CTRL	WU_VRAM_VMON_EN	WU_SUPP_VMON_EN	WU_XTAL_DLY_CTRL	WU_OV_DET_CTRL	WU_UV_DET_CTRL	XTAL_EN_OVERRIDE
R/W-0h	R/W-0h	R/W-1h	R/W-1h	R/W-0h	R/W-1h	R/W-1h	R/W-0h
15	14	13	12	11	10	9	8
WU_CPU_CLK_CTRL	INT_CLK_FREQ_SEL_3_0				INT_CLK_TRIM_7_0		
R/W-1h	R/W-0h				R/W-4Bh		
7	6	5	4	3	2	1	0
INT_CLK_TRIM_7_0					INT_CLK_SW_SEL	INT_CLK_STOP	INT_CLK_EN
R/W-4Bh					R/W-1h	R/W-0h	R/W-1h

Table 6-108. ANA_REG_WU_CTRL_REG_LOWV Register Field Descriptions

Bit	Field	Type	Reset	Description
31	RESERVED	R/W	0h	Reserved Reads return 0x0 and writes have no effect. 0x0 = Functional Reset
30-29	WU_SPARE_IN_2	R/W	3h	WU Spare Control 0x3 = Functional Reset
28	WU_VDD_OV_VMON_EN	R/W	0h	WU VDD OV VMON Enable Control 0 = VDD OV Detect Disabled 1 = VDD OV Detect Enabled 0x0 = Functional Reset
27	WU_VDD_UV_VMON_EN	R/W	0h	WU VDD UV VMON Enable Control 0 = VDD UV Detect Disabled 1 = VDD UV Detect Enabled 0x0 = Functional Reset
26	WU_VDDA_OSC_UV_VMON_EN	R/W	0h	WU VDDA OSC UV VMON Enable Control 0 = VDDA OSC UV Detect Disabled 1 = VDDA OSC UV Detect Enabled 0x0 = Functional Reset
25	WU_VDDS_3P3V_UV_VMON_EN	R/W	0h	WU VDDS 3.3V UV VMON Enable Control 0 = VDDS 3.3V UV Detect Disabled 1 = VDDS 3.3V UV Detect Enabled 0x0 = Functional Reset
24-23	WU_SPARE_IN	R/W	0h	WU Spare Control Change for 1642 ES2P0 Change Name : Newly added OR gates to provide options to bypass crude VDD DET (also refer to <11>) Bit <0> of this field when HIGH over rides the crude VDD_DET, this control is using firmware Bit<0> of this field is WU_CTRL_REG<23> Change for 2243 ES1P0 Using Bit<1>, is WU_CTRL_REG<24> This bit is used to make the reset fix SW controllable. Manshul's email notes-- Since the default value of WU_SPARE_IN<1> is '0', we will have the fix active by default. To disable it, firmware can write this bit to '1' before enabling VMON. 0x0 = Functional Reset

Copyright © 2025 Texas Instruments Incorporated

Table 6-108. ANA_REG_WU_CTRL_REG_LOWV Register Field Descriptions (continued)

Bit	Field	Type	Reset	Description
22	WU_SUPP_DET_CTRL	R/W	0h	WU VMON Detect Status Override Disable in Functional Test SOP 0 = VMON Det Status Override Disabled 1 = VMON Det Status Override Enabled 0x1 = Functional Reset
21	WU_VRAM_VMON_EN	R/W	1h	WU VRAM VMON Enable Control 0 = SRAM UV Detect Disabled 1 = SRAM UV Detect Enabled 0x1 = Functional Reset
20	WU_SUPP_VMON_EN	R/W	1h	WU VMON Enable Control 0 = VMON Control Disabled 1 = VMON Control Enabled 0x1 = Functional Reset
19	WU_XTAL_DLY_CTRL	R/W	0h	Introduce additional delay for XTAL settling 0 = Default delay as per WU-SEQ 1 = Introduce additional delay as per WU-SEQ 0x0 = Functional Reset
18	WU_OV_DET_CTRL	R/W	1h	WU Over Voltage Detect Control Changed for 1243 ES3P0 (Metal only change from 1642 ES2P0) Change Name : FW control of VDD OV DET EN 1 = OV Detect is disabled 0 = OV Detect is Enabled 0x1 = Functional Reset
17	WU_UV_DET_CTRL	R/W	1h	WU Under Voltage Detect Control 0 = UV Detect is disabled 1 = UV Detect is Enabled 0x1 = Functional Reset
16	XTAL_EN_OVERRIDE	R/W	0h	XTAL EN Override (WU-SEQ) Control 0 = XTAL Enable is driven by WU-SEQ detection 1 = Override XTAL Enable if disabled by default 0x0 = Functional Reset
15	WU_CPU_CLK_CTRL	R/W	1h	WU CLK Control 0 = CLK Monitor Function in Dig Sequencer is disabled 1 = REF CLK Monitor Function is Enabled 0x1 = Functional Reset
14-11	INT_CLK_FREQ_SEL_3_0	R/W	0h	WU Internal Clock (RCOSC) Frequency Select Bit<3> is used as override for VMON on Untrimmed devices. Bit <3> is '1' if device REFSYS_TOP is trimmed. Changed on 1642 ES2P0 Change Name : Newly added mux for CLK MON EN options When Bit<2> = 0, MASK_CPU_CLK_OUT_CTRL_LOWV == WU_CTRL_REG<12>, essentially Bit<1> of this field When Bit<2> = 1, MASK_CPU_CLK_OUT_CTRL_LOWV == (original function) INTER_MASK_CPU_CLK_OUT_CTRL_LOWV Change Name : Newly added OR gates to provide options to bypass crude VDD DET (also refer to <23>) Bit <0> of this field when HIGH over rides the crude VDD_DET 0x0 = Functional Reset
10-3	INT_CLK_TRIM_7_0	R/W	4Bh	WU Internal Clock (RCOSC) Trim 0x4B = Functional Reset (If not trimmed)
2	INT_CLK_SW_SEL	R/W	1h	WU Internal Clock (RCOSC) SW_SEL 0 = TBD 1 = TBD 0x1 = Functional Reset
1	INT_CLK_STOP	R/W	0h	WU Internal Clock (RCOSC) STOP 0 = Internal CLK can be enabled 1 = Internal CLK is OFF 0x0 = Functional Reset
0	INT_CLK_EN	R/W	1h	WU Internal Clock (RCOSC) ENABLE 0 = Internal CLK Disabled 1 = Internal CLK Enabled 0x1 = Functional Reset

Copyright © 2025 Texas Instruments Incorporated

6.2.2.106 ANA_REG_WU_TMUX_CTRL_LOWV Register (Offset = C2Ch) [reset = 0h]

ANA_REG_WU_TMUX_CTRL_LOWV is shown in Figure 6-107 and described in Table 6-109.

Return to the Summary Table.

Figure 6-107. ANA_REG_WU_TMUX_CTRL_LOWV Register

31	30	29	28	27	26	25	24
WU_TMUX_EN	RESERVED						
R/W-0h	R/W-0h						
23	22	21	20	19	18	17	16
RESERVED			VDDSINT18	SCALED_VDDA_OSC	VFB_0P85V	VDDA_OSC_UV_VREF	VDD_SR_UV_VREF
R/W-0h			R/W-0h	R/W-0h	R/W-0h	R/W-0h	R/W-0h
15	14	13	12	11	10	9	8
VT_DIG_SIG_OV	VT_DIG_SIG_UV	VT_ANA_SIG	VDDA14_2_INT	SCALED_VDDA_LVDS_1P8V_1P2	VDDA14_INT	VIOIN_UV_VREF	SCALED_VDDA18
R/W-0h	R/W-0h	R/W-0h	R/W-0h	R/W-0h	R/W-0h	R/W-0h	R/W-0h
7	6	5	4	3	2	1	0
VREF_0P9V	VDD_SR_OV_VREF	SCALED_VDDA_LVDS_1P8V	SCALED_VIOIN	VFB_0P6V	SCALED_VDDS18	SCALED_VIO3318	SCALED_VDDA_OSC_UV
R/W-0h	R/W-0h	R/W-0h	R/W-0h	R/W-0h	R/W-0h	R/W-0h	R/W-0h

Table 6-109. ANA_REG_WU_TMUX_CTRL_LOWV Register Field Descriptions

Bit	Field	Type	Reset	Description
31	WU_TMUX_EN	R/W	0h	WU TMUX Enable 0 = TMUX Disabled 1 = TMUX Enabled 0x0 = Functional Reset
30-21	RESERVED	R/W	0h	Reserved Reads return 0x0 and writes have no effect. 0x000 = Functional Reset
20	VDDSINT18	R/W	0h	VIOIN scaled supply for VIOIN Detect Scaling Factor: VIOIN*(52/90) 0x0 = Functional Reset
19	SCALED_VDDA_OSC	R/W	0h	Scaled VDDA_OSC supply for crude supply detect Scaling Factor: VDDA_OSC*(22/39) 0x0 = Functional Reset
18	VFB_0P85V	R/W	0h	Scaled VDD 1.2V used as reference for VDDA_OSC crude supply detect 0x0 = Functional Reset
17	VDDA_OSC_UV_VREF	R/W	0h	Test Mux Control. One Hot Control VDDA_OSC UV VMON reference 0x0 = Functional Reset
16	VDD_SR_UV_VREF	R/W	0h	Test Mux Control. One Hot Control VDD UV VMON reference 0x0 = Functional Reset
15	VT_DIG_SIG_OV	R/W	0h	Test Mux Control. One Hot Control Connected to Crude Vt-based VDD OV VMON reference 0x0 = Functional Reset
14	VT_DIG_SIG_UV	R/W	0h	Test Mux Control. One Hot Control Connected to Crude Vt-based VDD UV VMON reference 0x0 = Functional Reset
13	VT_ANA_SIG	R/W	0h	Test Mux Control. One Hot Control VT Detect Signal Level on VDDA18_PM in TPR VT Detect Signal Level on VDDA_LVDS_1P8V 0x0 = Functional Reset
12	VDDA14_2_INT	R/W	0h	Test Mux Control. One Hot Control Tied LO in TPR VIN_13RF2 0x0 = Functional Reset

Copyright © 2025 Texas Instruments Incorporated

Table 6-109. ANA_REG_WU_TMUX_CTRL_LOWV Register Field Descriptions (continued)

Bit	Field	Type	Reset	Description
11	SCALED_VDDA_LVDS_1P8V_1P2	R/W	0h	Test Mux Control. One Hot Control Change in TPR VDDS_3P3V IO DET reference (1.8V mode) Scaling Factor: 0.67 * VDDA_LVDS_1P8V 0x0 = Functional Reset
10	VDDA14_INT	R/W	0h	Test Mux Control. One Hot Control Tied LO in TPR VIN_13RF1 0x0 = Functional Reset
9	VIOIN_UV_VREF	R/W	0h	Test Mux Control. One Hot Control Reference voltage for VIOIN_UV VMON 0x0 = Functional Reset
8	SCALED_VDDA18	R/W	0h	Test Mux Control. One Hot Control Tied LO in TPR Scaling Factor: 0.55 * VIN_18BB 0x0 = Functional Reset
7	VREF_0P9V	R/W	0h	Test Mux Control. One Hot Control VREF_0P9V 0x0 = Functional Reset
6	VDD_SR_OV_VREF	R/W	0h	Test Mux Control. One Hot Control VDD OV VMON reference 0x0 = Functional Reset
5	SCALED_VDDA_LVDS_1P8V	R/W	0h	Test Mux Control. One Hot Control Change in TPR VDDS_3P3V IO DET reference (3.3V mode) Scaling Factor: 0.4 * VDDA_LVDS_1P8V 0x0 = Functional Reset
4	SCALED_VIOIN	R/W	0h	Test Mux Control. One Hot Control Change for 1642 ES2P0 Change Name : VIOIN & VIN_SRAM connection to GPADC Scaling Factor: 0.289 * VIOIN 0x0 = Functional Reset
3	VFB_0P6V	R/W	0h	Test Mux Control. One Hot Control Scaling Factor: 0.5 * VDD 0x0 = Functional Reset
2	SCALED_VDDS18	R/W	0h	Test Mux Control. One Hot Control Tied LO in TPR Scaling Factor: 0.55 * VDDS18 0x0 = Functional Reset
1	SCALED_VIO3318	R/W	0h	Test Mux Control. One Hot Control Scaling Factor: VIOIN/5.5 (3.3V mode), VIOIN/3 (1.8V mode) 0x0 = Functional Reset
0	SCALED_VDDA_OSC_UV	R/W	0h	Test Mux Control. One Hot Control Scaling Factor: VDDA_OSC/3 0x0 = Functional Reset

Copyright © 2025 Texas Instruments Incorporated

6.2.2.107 ANA_REG_TW_CTRL_REG_LOWV Register (Offset = C30h) [reset = 0h]

ANA_REG_TW_CTRL_REG_LOWV is shown in Figure 6-108 and described in Table 6-110.

Return to the Summary Table.

Figure 6-108. ANA_REG_TW_CTRL_REG_LOWV Register

31	30	29	28	27	26	25	24
RESERVED							
R/W-0h							
23	22	21	20	19	18	17	16
RESERVED				RTRIM_TW_4_0			
R/W-0h				R/W-0h			
15	14	13	12	11	10	9	8
RTRIM_TW_4_0	ANA_TMUX_BUF_EN	ANA_TMUX_BUF_BYPASS	VIN_EXT_CTRL	VREF_EXT_CTRL	IFORCE_EXT_CTRL	TS_SE_INP_BUF_EN	TS_DIFF_INP_BUF_EN
R/W-0h	R/W-0h	R/W-0h	R/W-0h	R/W-0h	R/W-0h	R/W-0h	R/W-0h
7	6	5	4	3	2	1	0
ADC_REF_SEL_2_0			ADC_REF_BUF_EN	ADC_INP_BUF_EN	ADC_RESET	ADC_START_CONV	ADC_EN
R/W-0h			R/W-0h	R/W-0h	R/W-0h	R/W-0h	R/W-0h

Table 6-110. ANA_REG_TW_CTRL_REG_LOWV Register Field Descriptions

Bit	Field	Type	Reset	Description
31-20	RESERVED	R/W	0h	Reserved 0x000 = Functional Reset
19-15	RTRIM_TW_4_0	R/W	0h	RTRIM value to TW routed to BIST MUX IN REFSYS for I2V 0x02 = Functional Reset
14	ANA_TMUX_BUF_EN	R/W	0h	TW ANA TMUX Buffer Enabled 0 = ANA TMUX Buffer Disabled 1 = ANA TMUX Buffer Enabled 0x0 = Functional Reset
13	ANA_TMUX_BUF_BYPASS	R/W	0h	TW ANA TMUX Buffer Bypass 0 = ANA TMUX Buffer By-pass Disabled 1 = ANA TMUX Buffer By-pass Enabled 0x0 = Functional Reset
12	VIN_EXT_CTRL	R/W	0h	TW VIN Control from External Source 0 = External VIN Control Disabled 1 = External VIN Control Enabled 0x0 = Functional Reset
11	VREF_EXT_CTRL	R/W	0h	TW VREF Control from External SOurce 0 = External VREF Control Disabled 1 = External VREF Control Enabled 0x0 = Functional Reset
10	IFORCE_EXT_CTRL	R/W	0h	TW Iforce Control from External Source 0 = IFORCE Control Disabled 1 = IFORCE Control Enabled 0x0 = Functional Reset
9	TS_SE_INP_BUF_EN	R/W	0h	TW ADC TS SE Inp Buffer Enable 0 = Input Buffer disabled 1 = Input Buffer Enabled 0x0 = Functional Reset
8	TS_DIFF_INP_BUF_EN	R/W	0h	TW ADC TS DIFF Inp Buffer Enable 0 = Input Buffer disabled 1 = Input Buffer Enabled 0x1 = Functional Reset
7-5	ADC_REF_SEL_2_0	R/W	0h	TW ADC Reference Select 0b001 = Reference from Top Refsys 0b010 = Reference from RX Refsys 0b100 = Reference from External Test Pin (CZ/ Trim) 0x001 = Functional Reset
4	ADC_REF_BUF_EN	R/W	0h	TW ADC Reference Buffer Enable 0 = Input Buffer disabled 1 = Input Buffer Enabled (Default) 0x1 = Functional Reset
3	ADC_INP_BUF_EN	R/W	0h	TW ADC Input Buffer Enable 0 = Input Buffer disabled 1 = Input Buffer Enabled (Default) 0x1 = Functional Reset

Copyright © 2025 Texas Instruments Incorporated

Table 6-110. ANA_REG_TW_CTRL_REG_LOWV Register Field Descriptions (continued)

Bit	Field	Type	Reset	Description
2	ADC_RESET	R/W	0h	TW ADC Reset (Active High) 0 = ADC Out of Reset 1 = ADC In Reset 0x1 = Functional Reset
1	ADC_START_CONV	R/W	0h	TW ADC Start Conversion 0x0 = Functional Reset
0	ADC_EN	R/W	0h	TW ADC Control 0 = ADC Disable 1 = ADC Enable 0x0 = Functional Reset

Copyright © 2025 Texas Instruments Incorporated

6.2.2.108 ANA_REG_TW_ANA_TMUX_CTRL_LOWV Register (Offset = C34h) [reset = 0h]

ANA_REG_TW_ANA_TMUX_CTRL_LOWV is shown in Figure 6-109 and described in Table 6-111.

Return to the Summary Table.

Figure 6-109. ANA_REG_TW_ANA_TMUX_CTRL_LOWV Register

31	30	29	28	27	26	25	24
ANA_TEST_EN	CLK_TMUX_ESD_CTRL	RESERVED					
R/W-0h	R/W-0h	R/W-0h					
23	22	21	20	19	18	17	16
RESERVED					ATESTV_VSLDO	TMUX_BUF_OUT_EN	I2V_SENSE
R/W-0h					R/W-0h	R/W-0h	R/W-0h
15	14	13	12	11	10	9	8
BIST_MUX_OUT_1P8V	ODP	VBE_TS_WEAK	VBE_TS_STRONG	DELVBE_BUFF_OUT	ADC_REF_BUF_OUT	ADC_BUF_OUT_1P8V	DC_BIST_BUF_INP_1P8V
R/W-0h	R/W-0h	R/W-0h	R/W-0h	R/W-0h	R/W-0h	R/W-0h	R/W-0h
7	6	5	4	3	2	1	0
VBE_W_BUFF	VBE_S_BUFF	PM_ANA_INP_5	PM_ANA_INP_4	PM_ANA_INP_3	PM_ANA_INP_2	REFSYS_TEST_OUT_1P8V	WU_ANA_TEST_OUT_1P8V
R/W-0h	R/W-0h	R/W-0h	R/W-0h	R/W-0h	R/W-0h	R/W-0h	R/W-0h

Table 6-111. ANA_REG_TW_ANA_TMUX_CTRL_LOWV Register Field Descriptions

Bit	Field	Type	Reset	Description
31	ANA_TEST_EN	R/W	0h	TW ANA Test MUX Enabled 0 = ANA TMUX Control Disabled 1 = ANA TMUX Control Enabled 0x0 = Functional Reset
30	CLK_TMUX_ESD_CTRL	R/W	0h	CLK TMUX ESD CTRL in Pad-Frame 0x0 = Functional Reset
29-19	RESERVED	R/W	0h	Reserved Reads return 0x0 and writes have no effect. 0x000 = Functional Reset
18	ATESTV_VSLDO	R/W	0h	Enable Output of ATESTV of VSLDO 0x0 = Functional Reset
17	TMUX_BUF_OUT_EN	R/W	0h	Enable Output of TMUX buffer 0x0 = Functional Reset
16	I2V_SENSE	R/W	0h	I2V Sense Voltage of External IREF Forced. IREF is forced thru' ANAMUX Pin and enabling TW_CTRL_REG<10> 0x0 = Functional Reset
15	BIST_MUX_OUT_1P8V	R/W	0h	BIST Mux output pre ADC input Buffer 0x0 = Functional Reset
14	ODP	R/W	0h	Ibias current from Top Refsys for measurement on Test Pin 0x0 = Functional Reset
13	VBE_TS_WEAK	R/W	0h	Single PNP Sense voltage for TSENSE selected 0x0 = Functional Reset
12	VBE_TS_STRONG	R/W	0h	Multi PNP Sense voltage for TSENSE selected 0x0 = Functional Reset
11	DELVBE_BUFF_OUT	R/W	0h	Difference TSENSE signal delVbe scaled and buffered for chosen TSENSE element 0x0 = Functional Reset
10	ADC_REF_BUF_OUT	R/W	0h	ADC reference buffer out to Test Pin 0x0 = Functional Reset
9	ADC_BUF_OUT_1P8V	R/W	0h	Buffered output of ADC inputs to GPADC 0x0 = Functional Reset

Copyright © 2025 Texas Instruments Incorporated

Table 6-111. ANA_REG_TW_ANA_TMUX_CTRL_LOWV Register Field Descriptions (continued)

Bit	Field	Type	Reset	Description
8	DC_BIST_BUF_INP_1P8V	R/W	0h	DC BIST Buffered output of RX, TX, CLK, LO (shorted on to this net). DC BIST one hot control and DC BIST control has to be used to bring relevant signal here 0x0 = Functional Reset
7	VBE_W_BUFF	R/W	0h	Buffered value of Weak PNP 0x0 = Functional Reset
6	VBE_S_BUFF	R/W	0h	Buffered value of Strong PNP 0x0 = Functional Reset
5	PM_ANA_INP_5	R/W	0h	CLK ANA Test Pin Mapped 0x0 = Functional Reset
4	PM_ANA_INP_4	R/W	0h	RX ANA Test Mux Control 0x0 = Functional Reset
3	PM_ANA_INP_3	R/W	0h	LODIST ANA Test Mux Control 0x0 = Functional Reset
2	PM_ANA_INP_2	R/W	0h	TX PM ANA Test Mux Control 0x0 = Functional Reset
1	REFSYS_TEST_OUT_1P8V	R/W	0h	Mux Output of Refsys Test Mux. Refsys Test Mux has to be enabled and controlled to bring the internal signal of Refsys Analog - PMTOP 0x0 = Functional Reset
0	WU_ANA_TEST_OUT_1P8V	R/W	0h	Mux Output of WU Test Mux. WU Test Mux has to be enabled and controlled to bring the internal signal of WU Analog 0x0 = Functional Reset

Copyright © 2025 Texas Instruments Incorporated

6.2.2.109 ANA_REG_TW_SPARE_LOWV Register (Offset = C38h) [reset = 0h]

ANA_REG_TW_SPARE_LOWV is shown in Figure 6-110 and described in Table 6-112.

Return to the Summary Table.

Figure 6-110. ANA_REG_TW_SPARE_LOWV Register

31	30	29	28	27	26	25	24	23	22	21	20	19	18	17	16	15	14	13	12	11	10	9	8	7	6	5	4	3	2	1	0
RESERVED																															
R/W-0h																															

Table 6-112. ANA_REG_TW_SPARE_LOWV Register Field Descriptions

Bit	Field	Type	Reset	Description
31-0	RESERVED	R/W	0h	Reserved Reads return 0xFF00 and writes have no effect. 0xFFFF0000 = Functional Reset

Copyright © 2025 Texas Instruments Incorporated

6.2.2.110 ANA_REG_WU_MODE_REG_LOWV Register (Offset = C3Ch) [reset = 0h]

ANA_REG_WU_MODE_REG_LOWV is shown in Figure 6-111 and described in Table 6-113.

Return to the Summary Table.

Figure 6-111. ANA_REG_WU_MODE_REG_LOWV Register

31	30	29	28	27	26	25	24
RESERVED							
R-0h							
23	22	21	20	19	18	17	16
RESERVED							
R-0h							
15	14	13	12	11	10	9	8
RESERVED							
R-0h							
7	6	5	4	3	2	1	0
RESERVED	SOP_MODE_LAT_4_0					TEST_MODE_DET_SYNC	FUNC_TEST_DET_SYNC
R-0h	R-0h					R-0h	R-0h

Table 6-113. ANA_REG_WU_MODE_REG_LOWV Register Field Descriptions

Bit	Field	Type	Reset	Description
31-7	RESERVED	R	0h	Reserved Reads return 0x0 and writes have no effect. 0x0000000 = Functional Reset
6-2	SOP_MODE_LAT_4_0	R	0h	SOP Mode Latched Output
1	TEST_MODE_DET_SYNC	R	0h	Latched Output of Test Mode Detect SOP
0	FUNC_TEST_DET_SYNC	R	0h	Latched Output of Functional Test Mode SOP

Copyright © 2025 Texas Instruments Incorporated

6.2.2.111 ANA_REG_WU_STATUS_REG_LOWV Register (Offset = C40h) [reset = 0h]

ANA_REG_WU_STATUS_REG_LOWV is shown in Figure 6-112 and described in Table 6-114.

Return to the Summary Table.

Figure 6-112. ANA_REG_WU_STATUS_REG_LOWV Register

31	30	29	28	27	26	25	24
RESERVED							
R-0h							
23	22	21	20	19	18	17	16
RESERVED					VDDS_3P3V_UVDET_LAT	VDDA_OSC_UVDET_LAT	SUPP_OK_APLLVCO18
R-0h					R-0h	R-0h	R-0h
15	14	13	12	11	10	9	8
HVMODE	LIMP_MODE_STATUS	XTAL_DET_STATUS	RCOSC_CLK_STATUS	REF_CLK_STATUS	SUPP_OK_VDDD18	SUPP_OK_SRAM12	SUPP_OK_RF2_14
R-0h	R-0h	R-0h	R-0h	R-0h	R-0h	R-0h	R-0h
7	6	5	4	3	2	1	0
SUPP_OK_RF14	SUPP_OK_RF10	SUPP_OK_IO33	SUPP_OK_IO18	SUPP_OK_CLK18	SUPP_OK_AANA18	CORE_UVDET_LAT	CORE_OVDET_LAT
R-0h	R-0h	R-0h	R-0h	R-0h	R-0h	R-0h	R-0h

Table 6-114. ANA_REG_WU_STATUS_REG_LOWV Register Field Descriptions

Bit	Field	Type	Reset	Description
31-19	RESERVED	R	0h	Reserved Reads return 0x0 and writes have no effect.
18	VDDS_3P3V_UVDET_LAT	R	0h	New in TPR: Latched Value of 3.3V IO UV Detect 0 = UV Detect Not Triggered 1 = UV Detect has Triggered
17	VDDA_OSC_UVDET_LAT	R	0h	Latched value of UV detect of LOMULT 1.8V supply (AWR devices) For TPR, Latched Value of UV Detect of VDDA_OSC 0 = UV Detect Not Triggered 1 = UV Detect has Triggered
16	SUPP_OK_APLLVCO18	R	0h	Supp Detect output of APLL VCO 1.8V 0 = Supply Not detected 1 = Supply Detected Tied LO in TPR (Unused VMON)
15	HVMODE	R	0h	HVMODE Status from VMON 1 = 3.3V VIO 0 = 1.8V VIO
14	LIMP_MODE_STATUS	R	0h	Ref CLK status at Wake-up 0 = REF CLK is present 1 = REF CLK is absent and CPU CLK Switched to RCOSC
13	XTAL_DET_STATUS	R	0h	XTAL Detect status at Wake-up 0 = XTAL absent 1 = XTAL Present
12	RCOSC_CLK_STATUS	R	0h	RCOSC status at Wake-up 0 = RCOSC CLK absent 1 = RCOSC CLK Present
11	REF_CLK_STATUS	R	0h	Ref CLK status at Wake-up 0 = REF CLK absent 1 = REF CLK Present
10	SUPP_OK_VDDD18	R	0h	Supp Detect output of LVDS 1.8V 0 = Supply Not detected 1 = Supply Detected Tied LO in TPR (Unused VMON)
9	SUPP_OK_SRAM12	R	0h	UV Detect Status of SRAM 0 = UV Not Detected 1 = UV Detected Tied LO in TPR (Unused VMON)
8	SUPP_OK_RF2_14	R	0h	Supp Detect output of RF2 1.4V Pin 0 = Supply Not detected 1 = Supply Detected Tied LO in TPR (Unused VMON)

Copyright © 2025 Texas Instruments Incorporated

Table 6-114. ANA_REG_WU_STATUS_REG_LOWV Register Field Descriptions (continued)

Bit	Field	Type	Reset	Description
7	SUPP_OK_RF14	R	0h	Updated for 1642 ES2P0 Change name : Mux for VIN_13 OK in LDO bypass mode This output bit is always tied low Tied LO in TPR and AWR/IWR devices
6	SUPP_OK_RF10	R	0h	Updated for 1642 ES2P0 Change name : Mux for VIN_13 OK in LDO bypass mode When RF_LDO_BYPASS_EN = 1, this bit will be high when the supply is > 0.75 When RF_LDO_BYPASS_EN = 0, this bit will be high when the supply is > 1.05 Tied LO in TPR (Unused VMON)
5	SUPP_OK_IO33	R	0h	Supp Detect output of IO 3.3V 0 = Supply Not detected 1 = Supply Detected
4	SUPP_OK_IO18	R	0h	Supp Detect output of IO 1.8V 0 = Supply Not detected 1 = Supply Detected
3	SUPP_OK_CLK18	R	0h	Supp Detect output of CLK 1.8V 0 = Supply Not detected 1 = Supply Detected For TPR, Crude detection of VDDA_OSC
2	SUPP_OK_ANA18	R	0h	Supp Detect output of Ana 1.8V Tied LO in TPR (unused VMON) 0 = Supply Not detected 1 = Supply Detected
1	CORE_UVDET_LAT	R	0h	Latched Value of UV Detect 0 = UV Detect Not Triggered 1 = UV Detect has Triggered
0	CORE_OVDET_LAT	R	0h	Latched Value of OV Detect 0 = OV Detect Not Triggered 1 = OV Detect has Triggered

Copyright © 2025 Texas Instruments Incorporated

6.2.2.112 ANA_REG_WU_SPARE_OUT_LOWV Register (Offset = C44h) [reset = 0h]

ANA_REG_WU_SPARE_OUT_LOWV is shown in Figure 6-113 and described in Table 6-115.

Return to the Summary Table.

Figure 6-113. ANA_REG_WU_SPARE_OUT_LOWV Register

31	30	29	28	27	26	25	24
RESERVED							
R-0h							
23	22	21	20	19	18	17	16
RESERVED							
R-0h							
15	14	13	12	11	10	9	8
RESERVED							
R-0h							
7	6	5	4	3	2	1	0
CORE_UVDET_LOWV	CORE_OVDET_LOWV	INT_OSC_CTRL	SUPPDET_OV_CTRL	HVMODE	VDDS18DET	VDDARF_DET	VDDCLK18DET
R-0h	R-0h	R-0h	R-0h	R-0h	R-0h	R-0h	R-0h

Table 6-115. ANA_REG_WU_SPARE_OUT_LOWV Register Field Descriptions

Bit	Field	Type	Reset	Description
31-8	RESERVED	R	0h	Reserved Reads return 0x0 and writes have no effect.
7	CORE_UVDET_LOWV	R	0h	UV Detect of Core Supply-Unlatched
6	CORE_OVDET_LOWV	R	0h	OV Detect of Core Supply-Unlatched
5	INT_OSC_CTRL	R	0h	Internal Oscillator Control
4	SUPPDET_OV_CTRL	R	0h	Supply Detect Override Bit
3	HVMODE	R	0h	Status of VIO supply. 3.3V or 1.8V
2	VDDS18DET	R	0h	Status of 1.8V IO Bias Supply
1	VDDARF_DET	R	0h	Status of 1.3V RF Supply
0	VDDCLK18DET	R	0h	Status of 1.8V CLK Supply

Copyright © 2025 Texas Instruments Incorporated

6.2.2.113 HW_SPARE_RW0 Register (Offset = FD0h) [reset = 0h]

HW_SPARE_RW0 is shown in Figure 6-114 and described in Table 6-116.

Return to the Summary Table.

Figure 6-114. HW_SPARE_RW0 Register

31	30	29	28	27	26	25	24	23	22	21	20	19	18	17	16	15	14	13	12	11	10	9	8	7	6	5	4	3	2	1	0
hw_spare_rw0																															
R/W-0h																															

Table 6-116. HW_SPARE_RW0 Register Field Descriptions

Bit	Field	Type	Reset	Description
31-0	hw_spare_rw0	R/W	0h	Reserved for HW R&D

Copyright © 2025 Texas Instruments Incorporated

6.2.2.114 HW_SPARE_RW1 Register (Offset = FD4h) [reset = 0h]

HW_SPARE_RW1 is shown in Figure 6-115 and described in Table 6-117.

Return to the Summary Table.

Figure 6-115. HW_SPARE_RW1 Register

31	30	29	28	27	26	25	24	23	22	21	20	19	18	17	16	15	14	13	12	11	10	9	8	7	6	5	4	3	2	1	0
hw_spare_rw1																															
R/W-0h																															

Table 6-117. HW_SPARE_RW1 Register Field Descriptions

Bit	Field	Type	Reset	Description
31-0	hw_spare_rw1	R/W	0h	Reserved for HW R&D

Copyright © 2025 Texas Instruments Incorporated

6.2.2.115 HW_SPARE_RW2 Register (Offset = FD8h) [reset = 0h]

HW_SPARE_RW2 is shown in Figure 6-116 and described in Table 6-118.

Return to the Summary Table.

Figure 6-116. HW_SPARE_RW2 Register

31	30	29	28	27	26	25	24	23	22	21	20	19	18	17	16	15	14	13	12	11	10	9	8	7	6	5	4	3	2	1	0
hw_spare_rw2																															
R/W-0h																															

Table 6-118. HW_SPARE_RW2 Register Field Descriptions

Bit	Field	Type	Reset	Description
31-0	hw_spare_rw2	R/W	0h	Reserved for HW R&D

Copyright © 2025 Texas Instruments Incorporated

6.2.2.116 HW_SPARE_RW3 Register (Offset = FDCh) [reset = 0h]

HW_SPARE_RW3 is shown in Figure 6-117 and described in Table 6-119.

Return to the Summary Table.

Figure 6-117. HW_SPARE_RW3 Register

31	30	29	28	27	26	25	24	23	22	21	20	19	18	17	16	15	14	13	12	11	10	9	8	7	6	5	4	3	2	1	0
hw_spare_rw3																															
R/W-0h																															

Table 6-119. HW_SPARE_RW3 Register Field Descriptions

Bit	Field	Type	Reset	Description
31-0	hw_spare_rw3	R/W	0h	Reserved for HW R&D

Copyright © 2025 Texas Instruments Incorporated

6.2.2.117 HW_SPARE_RO0 Register (Offset = FE0h) [reset = 0h]

HW_SPARE_RO0 is shown in Figure 6-118 and described in Table 6-120.

Return to the Summary Table.

Figure 6-118. HW_SPARE_RO0 Register

31	30	29	28	27	26	25	24	23	22	21	20	19	18	17	16	15	14	13	12	11	10	9	8	7	6	5	4	3	2	1	0
hw_spare_ro0																															
R-0h																															

Table 6-120. HW_SPARE_RO0 Register Field Descriptions

Bit	Field	Type	Reset	Description
31-0	hw_spare_ro0	R	0h	Reserved for HW R&D

Copyright © 2025 Texas Instruments Incorporated

6.2.2.118 HW_SPARE_RO1 Register (Offset = FE4h) [reset = 0h]

HW_SPARE_RO1 is shown in Figure 6-119 and described in Table 6-121.

Return to the Summary Table.

Figure 6-119. HW_SPARE_RO1 Register

31	30	29	28	27	26	25	24	23	22	21	20	19	18	17	16	15	14	13	12	11	10	9	8	7	6	5	4	3	2	1	0
hw_spare_ro1																															
R-0h																															

Table 6-121. HW_SPARE_RO1 Register Field Descriptions

Bit	Field	Type	Reset	Description
31-0	hw_spare_ro1	R	0h	Reserved for HW R&D

Copyright © 2025 Texas Instruments Incorporated

6.2.2.119 HW_SPARE_RO2 Register (Offset = FE8h) [reset = 0h]

HW_SPARE_RO2 is shown in Figure 6-120 and described in Table 6-122.

Return to the Summary Table.

Figure 6-120. HW_SPARE_RO2 Register

31	30	29	28	27	26	25	24	23	22	21	20	19	18	17	16	15	14	13	12	11	10	9	8	7	6	5	4	3	2	1	0
hw_spare_ro2																															
R-0h																															

Table 6-122. HW_SPARE_RO2 Register Field Descriptions

Bit	Field	Type	Reset	Description
31-0	hw_spare_ro2	R	0h	Reserved for HW R&D

Copyright © 2025 Texas Instruments Incorporated

6.2.2.120 HW_SPARE_RO3 Register (Offset = FECh) [reset = 0h]

HW_SPARE_RO3 is shown in Figure 6-121 and described in Table 6-123.

Return to the Summary Table.

Figure 6-121. HW_SPARE_RO3 Register

31	30	29	28	27	26	25	24	23	22	21	20	19	18	17	16	15	14	13	12	11	10	9	8	7	6	5	4	3	2	1	0
hw_spare_ro3																															
R-0h																															

Table 6-123. HW_SPARE_RO3 Register Field Descriptions

Bit	Field	Type	Reset	Description
31-0	hw_spare_ro3	R	0h	Reserved for HW R&D

Copyright © 2025 Texas Instruments Incorporated

6.2.2.121 HW_SPARE_WPH Register (Offset = FF0h) [reset = 0h]

HW_SPARE_WPH is shown in Figure 6-122 and described in Table 6-124.

Return to the Summary Table.

Figure 6-122. HW_SPARE_WPH Register

31	30	29	28	27	26	25	24	23	22	21	20	19	18	17	16	15	14	13	12	11	10	9	8	7	6	5	4	3	2	1	0
hw_spare_wph																															
R/W-0h																															

Table 6-124. HW_SPARE_WPH Register Field Descriptions

Bit	Field	Type	Reset	Description
31-0	hw_spare_wph	R/W	0h	Reserved for HW R&D

Copyright © 2025 Texas Instruments Incorporated

6.2.2.122 HW_SPARE_REC Register (Offset = FF4h) [reset = 0h]

HW_SPARE_REC is shown in Figure 6-123 and described in Table 6-125.

Return to the Summary Table.

Figure 6-123. HW_SPARE_REC Register

31	30	29	28	27	26	25	24
hw_spare_rec31	hw_spare_rec30	hw_spare_rec29	hw_spare_rec28	hw_spare_rec27	hw_spare_rec26	hw_spare_rec25	hw_spare_rec24
R/W-0h	R/W-0h	R/W-0h	R/W-0h	R/W-0h	R/W-0h	R/W-0h	R/W-0h
23	22	21	20	19	18	17	16
hw_spare_rec23	hw_spare_rec22	hw_spare_rec21	hw_spare_rec20	hw_spare_rec19	hw_spare_rec18	hw_spare_rec17	hw_spare_rec16
R/W-0h	R/W-0h	R/W-0h	R/W-0h	R/W-0h	R/W-0h	R/W-0h	R/W-0h
15	14	13	12	11	10	9	8
hw_spare_rec15	hw_spare_rec14	hw_spare_rec13	hw_spare_rec12	hw_spare_rec11	hw_spare_rec10	hw_spare_rec9	hw_spare_rec8
R/W-0h	R/W-0h	R/W-0h	R/W-0h	R/W-0h	R/W-0h	R/W-0h	R/W-0h
7	6	5	4	3	2	1	0
hw_spare_rec7	hw_spare_rec6	hw_spare_rec5	hw_spare_rec4	hw_spare_rec3	hw_spare_rec2	hw_spare_rec1	hw_spare_rec0
R/W-0h	R/W-0h	R/W-0h	R/W-0h	R/W-0h	R/W-0h	R/W-0h	R/W-0h

Table 6-125. HW_SPARE_REC Register Field Descriptions

Bit	Field	Type	Reset	Description
31	hw_spare_rec31	R/W	0h	Reserved for HW R&D
30	hw_spare_rec30	R/W	0h	Reserved for HW R&D
29	hw_spare_rec29	R/W	0h	Reserved for HW R&D
28	hw_spare_rec28	R/W	0h	Reserved for HW R&D
27	hw_spare_rec27	R/W	0h	Reserved for HW R&D
26	hw_spare_rec26	R/W	0h	Reserved for HW R&D
25	hw_spare_rec25	R/W	0h	Reserved for HW R&D
24	hw_spare_rec24	R/W	0h	Reserved for HW R&D
23	hw_spare_rec23	R/W	0h	Reserved for HW R&D
22	hw_spare_rec22	R/W	0h	Reserved for HW R&D
21	hw_spare_rec21	R/W	0h	Reserved for HW R&D
20	hw_spare_rec20	R/W	0h	Reserved for HW R&D
19	hw_spare_rec19	R/W	0h	Reserved for HW R&D
18	hw_spare_rec18	R/W	0h	Reserved for HW R&D
17	hw_spare_rec17	R/W	0h	Reserved for HW R&D
16	hw_spare_rec16	R/W	0h	Reserved for HW R&D
15	hw_spare_rec15	R/W	0h	Reserved for HW R&D
14	hw_spare_rec14	R/W	0h	Reserved for HW R&D
13	hw_spare_rec13	R/W	0h	Reserved for HW R&D
12	hw_spare_rec12	R/W	0h	Reserved for HW R&D
11	hw_spare_rec11	R/W	0h	Reserved for HW R&D

Copyright © 2025 Texas Instruments Incorporated

Table 6-125. HW_SPARE_REC Register Field Descriptions (continued)

Bit	Field	Type	Reset	Description
10	hw_spare_rec10	R/W	0h	Reserved for HW R&D
9	hw_spare_rec9	R/W	0h	Reserved for HW R&D
8	hw_spare_rec8	R/W	0h	Reserved for HW R&D
7	hw_spare_rec7	R/W	0h	Reserved for HW R&D
6	hw_spare_rec6	R/W	0h	Reserved for HW R&D
5	hw_spare_rec5	R/W	0h	Reserved for HW R&D
4	hw_spare_rec4	R/W	0h	Reserved for HW R&D
3	hw_spare_rec3	R/W	0h	Reserved for HW R&D
2	hw_spare_rec2	R/W	0h	Reserved for HW R&D
1	hw_spare_rec1	R/W	0h	Reserved for HW R&D
0	hw_spare_rec0	R/W	0h	Reserved for HW R&D

Copyright © 2025 Texas Instruments Incorporated

6.2.2.123 LOCK0_KICK0 Register (Offset = 1008h) [reset = 0h]

LOCK0_KICK0 is shown in Figure 6-124 and described in Table 6-126.

Return to the Summary Table.

- KICK0 component

Figure 6-124. LOCK0_KICK0 Register

31	30	29	28	27	26	25	24	23	22	21	20	19	18	17	16	15	14	13	12	11	10	9	8	7	6	5	4	3	2	1	0
LOCK0_kick0																															
R/W-0h																															

Table 6-126. LOCK0_KICK0 Register Field Descriptions

Bit	Field	Type	Reset	Description
31-0	LOCK0_kick0	R/W	0h	- KICK0 component

Copyright © 2025 Texas Instruments Incorporated

6.2.2.124 LOCK0_KICK1 Register (Offset = 100Ch) [reset = 0h]

LOCK0_KICK1 is shown in Figure 6-125 and described in Table 6-127.

Return to the Summary Table.

- KICK1 component

Figure 6-125. LOCK0_KICK1 Register

31	30	29	28	27	26	25	24	23	22	21	20	19	18	17	16	15	14	13	12	11	10	9	8	7	6	5	4	3	2	1	0
LOCK0_kick1																															
R/W-0h																															

Table 6-127. LOCK0_KICK1 Register Field Descriptions

Bit	Field	Type	Reset	Description
31-0	LOCK0_kick1	R/W	0h	- KICK1 component

Copyright © 2025 Texas Instruments Incorporated

6.2.2.125 intr_raw_status Register (Offset = 1010h) [reset = X]

intr_raw_status is shown in Figure 6-126 and described in Table 6-128.

Return to the Summary Table.

Interrupt Raw Status/Set Register

Figure 6-126. intr_raw_status Register

31	30	29	28	27	26	25	24
RESERVED							
R/W-X							
23	22	21	20	19	18	17	16
RESERVED							
R/W-X							
15	14	13	12	11	10	9	8
RESERVED							
R/W-X							
7	6	5	4	3	2	1	0
RESERVED				proxy_err	kick_err	addr_err	prot_err
R/W-X				R/W1S-0h	R/W1S-0h	R/W1S-0h	R/W1S-0h

Table 6-128. intr_raw_status Register Field Descriptions

Bit	Field	Type	Reset	Description
31-4	RESERVED	R/W	X	
3	proxy_err	R/W1S	0h	Proxy0 access violation error. Raw status is read. Write a 1 to set the status. Writing a 0 has no effect.
2	kick_err	R/W1S	0h	Kick access violation error. Raw status is read. Write a 1 to set the status. Writing a 0 has no effect.
1	addr_err	R/W1S	0h	Addressing violation error. Raw status is read. Write a 1 to set the status. Writing a 0 has no effect.
0	prot_err	R/W1S	0h	Protection violation error. Raw status is read. Write a 1 to set the status. Writing a 0 has no effect.

Copyright © 2025 Texas Instruments Incorporated

6.2.2.126 intr_enabled_status_clear Register (Offset = 1014h) [reset = X]

intr_enabled_status_clear is shown in Figure 6-127 and described in Table 6-129.

Return to the Summary Table.

Interrupt Enabled Status/Clear register

Figure 6-127. intr_enabled_status_clear Register

31	30	29	28	27	26	25	24
RESERVED							
R/W-X							
23	22	21	20	19	18	17	16
RESERVED							
R/W-X							
15	14	13	12	11	10	9	8
RESERVED							
R/W-X							
7	6	5	4	3	2	1	0
RESERVED				enabled_proxy_err	enabled_kick_err	enabled_addr_err	enabled_prot_err
R/W-X				R/W1C-0h	R/W1C-0h	R/W1C-0h	R/W1C-0h

Table 6-129. intr_enabled_status_clear Register Field Descriptions

Bit	Field	Type	Reset	Description
31-4	RESERVED	R/W	X	
3	enabled_proxy_err	R/W1C	0h	Proxy0 access violation error. Enabled status is read. Write a 1 to clear the status. Writing a 0 has no effect.
2	enabled_kick_err	R/W1C	0h	Kick access violation error. Enabled status is read. Write a 1 to clear the status. Writing a 0 has no effect.
1	enabled_addr_err	R/W1C	0h	Addressing violation error. Enabled status is read. Write a 1 to clear the status. Writing a 0 has no effect.
0	enabled_prot_err	R/W1C	0h	Protection violation error. Enabled status is read. Write a 1 to clear the status. Writing a 0 has no effect.

Copyright © 2025 Texas Instruments Incorporated

6.2.2.127 intr_enable Register (Offset = 1018h) [reset = X]

intr_enable is shown in Figure 6-128 and described in Table 6-130.

Return to the Summary Table.

Interrupt Enable register

Figure 6-128. intr_enable Register

31	30	29	28	27	26	25	24
RESERVED							
R/W-X							
23	22	21	20	19	18	17	16
RESERVED							
R/W-X							
15	14	13	12	11	10	9	8
RESERVED							
R/W-X							
7	6	5	4	3	2	1	0
RESERVED				proxy_err_en	kick_err_en	addr_err_en	prot_err_en
R/W-X				R/W1S-0h	R/W1S-0h	R/W1S-0h	R/W1S-0h

Table 6-130. intr_enable Register Field Descriptions

Bit	Field	Type	Reset	Description
31-4	RESERVED	R/W	X	
3	proxy_err_en	R/W1S	0h	Proxy0 access violation error enable. Write a 1 to set the enable. Writing a 0 has no effect.
2	kick_err_en	R/W1S	0h	Kick access violation error enable. Write a 1 to set the enable. Writing a 0 has no effect.
1	addr_err_en	R/W1S	0h	Addressing violation error enable. Write a 1 to set the enable. Writing a 0 has no effect.
0	prot_err_en	R/W1S	0h	Protection violation error enable. Write a 1 to set the enable. Writing a 0 has no effect.

Copyright © 2025 Texas Instruments Incorporated

6.2.2.128 intr_enable_clear Register (Offset = 101Ch) [reset = X]

intr_enable_clear is shown in Figure 6-129 and described in Table 6-131.

Return to the Summary Table.

Interrupt Enable Clear register

Figure 6-129. intr_enable_clear Register

31	30	29	28	27	26	25	24
RESERVED							
R/W-X							
23	22	21	20	19	18	17	16
RESERVED							
R/W-X							
15	14	13	12	11	10	9	8
RESERVED							
R/W-X							
7	6	5	4	3	2	1	0
RESERVED				proxy_err_en_clr	kick_err_en_clr	addr_err_en_clr	prot_err_en_clr
R/W-X				R/W1C-0h	R/W1C-0h	R/W1C-0h	R/W1C-0h

Table 6-131. intr_enable_clear Register Field Descriptions

Bit	Field	Type	Reset	Description
31-4	RESERVED	R/W	X	
3	proxy_err_en_clr	R/W1C	0h	Proxy0 access violation error enable clear. Write a 1 to clear the enable. Writing a 0 has no effect.
2	kick_err_en_clr	R/W1C	0h	Kick access violation error enable clear. Write a 1 to clear the enable. Writing a 0 has no effect.
1	addr_err_en_clr	R/W1C	0h	Addressing violation error enable clear. Write a 1 to clear the enable. Writing a 0 has no effect.
0	prot_err_en_clr	R/W1C	0h	Protection violation error enable clear. Write a 1 to clear the enable. Writing a 0 has no effect.

Copyright © 2025 Texas Instruments Incorporated

6.2.2.129 eoi Register (Offset = 1020h) [reset = X]

eoi is shown in Figure 6-130 and described in Table 6-132.

Return to the Summary Table.

EOI register

Figure 6-130. eoi Register

31	30	29	28	27	26	25	24	23	22	21	20	19	18	17	16
RESERVED															
R/W-X															
15	14	13	12	11	10	9	8	7	6	5	4	3	2	1	0
RESERVED								eoi_vector							
R/W-X								R/W-0h							

Table 6-132. eoi Register Field Descriptions

Bit	Field	Type	Reset	Description
31-8	RESERVED	R/W	X	
7-0	eoi_vector	R/W	0h	EOI vector value. Write this with interrupt distribution value in the chip.

Copyright © 2025 Texas Instruments Incorporated

6.2.2.130 fault_address Register (Offset = 1024h) [reset = 0h]

fault_address is shown in Figure 6-131 and described in Table 6-133.

Return to the Summary Table.

Fault Address register

Figure 6-131. fault_address Register

31	30	29	28	27	26	25	24	23	22	21	20	19	18	17	16	15	14	13	12	11	10	9	8	7	6	5	4	3	2	1	0
fault_addr																															
R-0h																															

Table 6-133. fault_address Register Field Descriptions

Bit	Field	Type	Reset	Description
31-0	fault_addr	R	0h	Fault Address.

Copyright © 2025 Texas Instruments Incorporated

6.2.2.131 fault_type_status Register (Offset = 1028h) [reset = X]

fault_type_status is shown in Figure 6-132 and described in Table 6-134.

Return to the Summary Table.

Fault Type Status register

Figure 6-132. fault_type_status Register

31	30	29	28	27	26	25	24
RESERVED							
R-X							
23	22	21	20	19	18	17	16
RESERVED							
R-X							
15	14	13	12	11	10	9	8
RESERVED							
R-X							
7	6	5	4	3	2	1	0
RESERVED	fault_ns	fault_type					
R-X	R-0h	R-0h					

Table 6-134. fault_type_status Register Field Descriptions

Bit	Field	Type	Reset	Description
31-7	RESERVED	R	X	
6	fault_ns	R	0h	Non-secure access.
5-0	fault_type	R	0h	Fault Type 10_0000 = Supervisor read fault - priv = 1 dir = 1 dtype ! = 1 01_0000 = Supervisor write fault - priv = 1 dir = 0 00_1000 = Supervisor execute fault - priv = 1 dir = 1 dtype = 1 00_0100 = User read fault - priv = 0 dir = 1 dtype = 1 00_0010 = User write fault - priv = 0 dir = 0 00_0001 = User execute fault - priv = 0 dir = 1 dtype = 1 00_0000 = No fault

Copyright © 2025 Texas Instruments Incorporated

6.2.2.132 fault_attr_status Register (Offset = 102Ch) [reset = 0h]

fault_attr_status is shown in Figure 6-133 and described in Table 6-135.

Return to the Summary Table.

Fault Attribute Status register

Figure 6-133. fault_attr_status Register

31	30	29	28	27	26	25	24	23	22	21	20	19	18	17	16
fault_xid												fault_routeid			
R-0h												R-0h			
15	14	13	12	11	10	9	8	7	6	5	4	3	2	1	0
fault_routeid								fault_privid							
R-0h								R-0h							

Table 6-135. fault_attr_status Register Field Descriptions

Bit	Field	Type	Reset	Description
31-20	fault_xid	R	0h	XID.
19-8	fault_routeid	R	0h	Route ID.
7-0	fault_privid	R	0h	Privilege ID.

Copyright © 2025 Texas Instruments Incorporated

6.2.2.133 fault_clear Register (Offset = 1030h) [reset = X]

fault_clear is shown in Figure 6-134 and described in Table 6-136.

Return to the Summary Table.

Fault Clear register

Figure 6-134. fault_clear Register

31	30	29	28	27	26	25	24
RESERVED							
W-X							
23	22	21	20	19	18	17	16
RESERVED							
W-X							
15	14	13	12	11	10	9	8
RESERVED							
W-X							
7	6	5	4	3	2	1	0
RESERVED							fault_clr
W-X							W-0h

Table 6-136. fault_clear Register Field Descriptions

Bit	Field	Type	Reset	Description
31-1	RESERVED	W	X	
0	fault_clr	W	0h	Fault clear. Writing a 1 clears the current fault. Writing a 0 has no effect.

Copyright © 2025 Texas Instruments Incorporated

6.2.3 MSS_RCM Registers

Table 6-137 lists the MSS_RCM registers. All register offset addresses not listed in Table 6-137 should be considered as reserved locations and the register contents should not be modified.

Table 6-137. MSS_RCM Registers

Offset	Acronym	Register Name	Section
0h	PID	PID register	Section 7.2.3.1
4h	MSS_RST_CAUSE_CLR		Section 7.2.3.2
8h	MSS_RST_STATUS		Section 7.2.3.3
Ch	SYSRST_BY_DBG_RST		Section 7.2.3.4
10h	RST_ASSERDLY		Section 7.2.3.5
14h	RST2ASSERTDLY		Section 7.2.3.6
18h	RST_WFICHECK		Section 7.2.3.7
1Ch	MSS_MCANA_CLK_SRC_SEL		Section 7.2.3.8
20h	MSS_MCANB_CLK_SRC_SEL		Section 7.2.3.9
24h	MSS_QSPI_CLK_SRC_SEL		Section 7.2.3.10
28h	MSS_RTIA_CLK_SRC_SEL		Section 7.2.3.11
2Ch	MSS_RTIB_CLK_SRC_SEL		Section 7.2.3.12
30h	MSS_RTIC_CLK_SRC_SEL		Section 7.2.3.13
34h	MSS_WDT_CLK_SRC_SEL		Section 7.2.3.14
38h	MSS_SPIA_CLK_SRC_SEL		Section 7.2.3.15
3Ch	MSS_SPIB_CLK_SRC_SEL		Section 7.2.3.16
40h	MSS_I2C_CLK_SRC_SEL		Section 7.2.3.17
44h	MSS_SCIA_CLK_SRC_SEL		Section 7.2.3.18
48h	MSS_SCIB_CLK_SRC_SEL		Section 7.2.3.19
4Ch	MSS_CPTS_CLK_SRC_SEL		Section 7.2.3.20
50h	MSS_CPSW_CLK_SRC_SEL		Section 7.2.3.21
54h	MSS_MCANA_CLK_DIV_VAL		Section 7.2.3.22
58h	MSS_MCANB_CLK_DIV_VAL		Section 7.2.3.23
5Ch	MSS_QSPI_CLK_DIV_VAL		Section 7.2.3.24
60h	MSS_RTIA_CLK_DIV_VAL		Section 7.2.3.25
64h	MSS_RTIB_CLK_DIV_VAL		Section 7.2.3.26
68h	MSS_RTIC_CLK_DIV_VAL		Section 7.2.3.27
6Ch	MSS_WDT_CLK_DIV_VAL		Section 7.2.3.28
70h	MSS_SPIA_CLK_DIV_VAL		Section 7.2.3.29
74h	MSS_SPIB_CLK_DIV_VAL		Section 7.2.3.30
78h	MSS_I2C_CLK_DIV_VAL		Section 7.2.3.31
7Ch	MSS_SCIA_CLK_DIV_VAL		Section 7.2.3.32
80h	MSS_SCIB_CLK_DIV_VAL		Section 7.2.3.33
84h	MSS_CPTS_CLK_DIV_VAL		Section 7.2.3.34
88h	MSS_CPSW_CLK_DIV_VAL		Section 7.2.3.35
8Ch	MSS_RGMII_CLK_DIV_VAL		Section 7.2.3.36
90h	MSS_MII100_CLK_DIV_VAL		Section 7.2.3.37
94h	MSS_MII10_CLK_DIV_VAL		Section 7.2.3.38
98h	MSS_GPADC_CLK_DIV_VAL		Section 7.2.3.39
9Ch	MSS_MCANA_CLK_GATE		Section 7.2.3.40
A0h	MSS_MCANB_CLK_GATE		Section 7.2.3.41

Copyright © 2025 Texas Instruments Incorporated

Table 6-137. MSS_RCM Registers (continued)

Offset	Acronym	Register Name	Section
A4h	MSS_QSPI_CLK_GATE		Section 7.2.3.42
A8h	MSS_RTIA_CLK_GATE		Section 7.2.3.43
ACh	MSS_RTIB_CLK_GATE		Section 7.2.3.44
B0h	MSS_RTIC_CLK_GATE		Section 7.2.3.45
B4h	MSS_WDT_CLK_GATE		Section 7.2.3.46
B8h	MSS_SPIA_CLK_GATE		Section 7.2.3.47
BCh	MSS_SPIB_CLK_GATE		Section 7.2.3.48
C0h	MSS_I2C_CLK_GATE		Section 7.2.3.49
C4h	MSS_SCIA_CLK_GATE		Section 7.2.3.50
C8h	MSS_SCIB_CLK_GATE		Section 7.2.3.51
CCh	MSS_CPTS_CLK_GATE		Section 7.2.3.52
D0h	MSS_CPSW_CLK_GATE		Section 7.2.3.53
D4h	MSS_RGMII_CLK_GATE		Section 7.2.3.54
D8h	MSS_MII100_CLK_GATE		Section 7.2.3.55
DCh	MSS_MII10_CLK_GATE		Section 7.2.3.56
E0h	MSS_GPADC_CLK_GATE		Section 7.2.3.57
E4h	MSS_MCANA_CLK_STATUS		Section 7.2.3.58
E8h	MSS_MCANB_CLK_STATUS		Section 7.2.3.59
ECh	MSS_QSPI_CLK_STATUS		Section 7.2.3.60
F0h	MSS_RTIA_CLK_STATUS		Section 7.2.3.61
F4h	MSS_RTIB_CLK_STATUS		Section 7.2.3.62
F8h	MSS_RTIC_CLK_STATUS		Section 7.2.3.63
FCh	MSS_WDT_CLK_STATUS		Section 7.2.3.64
100h	MSS_SPIA_CLK_STATUS		Section 7.2.3.65
104h	MSS_SPIB_CLK_STATUS		Section 7.2.3.66
108h	MSS_I2C_CLK_STATUS		Section 7.2.3.67
10Ch	MSS_SCIA_CLK_STATUS		Section 7.2.3.68
110h	MSS_SCIB_CLK_STATUS		Section 7.2.3.69
114h	MSS_CPTS_CLK_STATUS		Section 7.2.3.70
118h	MSS_CPSW_CLK_STATUS		Section 7.2.3.71
11Ch	MSS_RGMII_CLK_STATUS		Section 7.2.3.72
120h	MSS_MII100_CLK_STATUS		Section 7.2.3.73
124h	MSS_MII10_CLK_STATUS		Section 7.2.3.74
128h	MSS_GPADC_CLK_STATUS		Section 7.2.3.75
12Ch	MSS_CR5SS_POR_RST_CTRL		Section 7.2.3.76
130h	MSS_CR5SSA_RST_CTRL		Section 7.2.3.77
134h	MSS_CR5SSB_RST_CTRL		Section 7.2.3.78
138h	MSS_CR5A_RST_CTRL		Section 7.2.3.79
13Ch	MSS_CR5B_RST_CTRL		Section 7.2.3.80
140h	MSS_VIMA_RST_CTRL		Section 7.2.3.81
144h	MSS_VIMB_RST_CTRL		Section 7.2.3.82
148h	MSS_CRC_RST_CTRL		Section 7.2.3.83
14Ch	MSS_RTIA_RST_CTRL		Section 7.2.3.84
150h	MSS_RTIB_RST_CTRL		Section 7.2.3.85
154h	MSS_RTIC_RST_CTRL		Section 7.2.3.86

Copyright © 2025 Texas Instruments Incorporated

Table 6-137. MSS_RCM Registers (continued)

Offset	Acronym	Register Name	Section
158h	MSS_WDT_RST_CTRL		Section 7.2.3.87
15Ch	MSS_ESM_RST_CTRL		Section 7.2.3.88
160h	MSS_DCCA_RST_CTRL		Section 7.2.3.89
164h	MSS_DCCB_RST_CTRL		Section 7.2.3.90
168h	MSS_DCCC_RST_CTRL		Section 7.2.3.91
16Ch	MSS_DCCD_RST_CTRL		Section 7.2.3.92
170h	MSS_GIO_RST_CTRL		Section 7.2.3.93
174h	MSS_SPIA_RST_CTRL		Section 7.2.3.94
178h	MSS_SPIB_RST_CTRL		Section 7.2.3.95
17Ch	MSS_QSPI_RST_CTRL		Section 7.2.3.96
180h	MSS_PWM1_RST_CTRL		Section 7.2.3.97
184h	MSS_PWM2_RST_CTRL		Section 7.2.3.98
188h	MSS_PWM3_RST_CTRL		Section 7.2.3.99
18Ch	MSS_MCANA_RST_CTRL		Section 7.2.3.100
190h	MSS_MCANB_RST_CTRL		Section 7.2.3.101
194h	MSS_I2C_RST_CTRL		Section 7.2.3.102
198h	MSS_SCIA_RST_CTRL		Section 7.2.3.103
19Ch	MSS_SCIB_RST_CTRL		Section 7.2.3.104
1A0h	MSS_EDMA_RST_CTRL		Section 7.2.3.105
1A4h	MSS_INFRA_RST_CTRL		Section 7.2.3.106
1A8h	MSS_CPSW_RST_CTRL		Section 7.2.3.107
1ACh	MSS_GPADC_RST_CTRL		Section 7.2.3.108
1B0h	MSS_DMM_RST_CTRL		Section 7.2.3.109
1B4h	R5_COREA_GATE		Section 7.2.3.110
1B8h	R5_COREB_GATE		Section 7.2.3.111
1BCh	MSS_L2_BANKA_PD_CTRL		Section 7.2.3.112
1C0h	MSS_L2_BANKB_PD_CTRL		Section 7.2.3.113
1C4h	MSS_L2_BANKA_PD_STATUS		Section 7.2.3.114
1C8h	MSS_L2_BANKB_PD_STATUS		Section 7.2.3.115
400h	HSM_RTIA_CLK_SRC_SEL		Section 7.2.3.116
404h	HSM_WDT_CLK_SRC_SEL		Section 7.2.3.117
408h	HSM_RTC_CLK_SRC_SEL		Section 7.2.3.118
40Ch	HSM_DMTA_CLK_SRC_SEL		Section 7.2.3.119
410h	HSM_DMTB_CLK_SRC_SEL		Section 7.2.3.120
414h	HSM_RTI_CLK_DIV_VAL		Section 7.2.3.121
418h	HSM_WDT_CLK_DIV_VAL		Section 7.2.3.122
41Ch	HSM_RTC_CLK_DIV_VAL		Section 7.2.3.123
420h	HSM_DMTA_CLK_DIV_VAL		Section 7.2.3.124
424h	HSM_DMTB_CLK_DIV_VAL		Section 7.2.3.125
428h	HSM_RTI_CLK_GATE		Section 7.2.3.126
42Ch	HSM_WDT_CLK_GATE		Section 7.2.3.127
430h	HSM_RTC_CLK_GATE		Section 7.2.3.128
434h	HSM_DMTA_CLK_GATE		Section 7.2.3.129
438h	HSM_DMTB_CLK_GATE		Section 7.2.3.130
43Ch	HSM_RTI_CLK_STATUS		Section 7.2.3.131

Copyright © 2025 Texas Instruments Incorporated

Table 6-137. MSS_RCM Registers (continued)

Offset	Acronym	Register Name	Section
440h	HSM_WDT_CLK_STATUS		Section 7.2.3.132
444h	HSM_RTC_CLK_STATUS		Section 7.2.3.133
448h	HSM_DMTA_CLK_STATUS		Section 7.2.3.134
44Ch	HSM_DMTB_CLK_STATUS		Section 7.2.3.135
FD0h	HW_SPARE_RW0		Section 7.2.3.136
FD4h	HW_SPARE_RW1		Section 7.2.3.137
FD8h	HW_SPARE_RW2		Section 7.2.3.138
FDCh	HW_SPARE_RW3		Section 7.2.3.139
FE0h	HW_SPARE_RO0		Section 7.2.3.140
FE4h	HW_SPARE_RO1		Section 7.2.3.141
FE8h	HW_SPARE_RO2		Section 7.2.3.142
FECh	HW_SPARE_RO3		Section 7.2.3.143
FF0h	HW_SPARE_WPH		Section 7.2.3.144
FF4h	HW_SPARE_REC		Section 7.2.3.145
1008h	LOCK0_KICK0	- KICK0 component	Section 7.2.3.146
100Ch	LOCK0_KICK1	- KICK1 component	Section 7.2.3.147
1010h	intr_raw_status	Interrupt Raw Status/Set Register	Section 7.2.3.148
1014h	intr_enabled_status_clear	Interrupt Enabled Status/Clear register	Section 7.2.3.149
1018h	intr_enable	Interrupt Enable register	Section 7.2.3.150
101Ch	intr_enable_clear	Interrupt Enable Clear register	Section 7.2.3.151
1020h	eoi	EOI register	Section 7.2.3.152
1024h	fault_address	Fault Address register	Section 7.2.3.153
1028h	fault_type_status	Fault Type Status register	Section 7.2.3.154
102Ch	fault_attr_status	Fault Attribute Status register	Section 7.2.3.155
1030h	fault_clear	Fault Clear register	Section 7.2.3.156

Copyright © 2025 Texas Instruments Incorporated

6.2.3.1 PID Register (Offset = 0h) [reset = 61800213h]

PID is shown in Figure 6-135 and described in Table 6-138.

Return to the Summary Table.

PID register

Figure 6-135. PID Register

31	30	29	28	27	26	25	24
PID_msb16							
R-6180h							
23	22	21	20	19	18	17	16
PID_msb16							
R-6180h							
15	14	13	12	11	10	9	8
PID_misc					PID_major		
R-0h					R-2h		
7	6	5	4	3	2	1	0
PID_custom		PID_minor					
R-0h		R-13h					

Table 6-138. PID Register Field Descriptions

Bit	Field	Type	Reset	Description
31-16	PID_msb16	R	6180h	
15-11	PID_misc	R	0h	
10-8	PID_major	R	2h	
7-6	PID_custom	R	0h	
5-0	PID_minor	R	13h	

Copyright © 2025 Texas Instruments Incorporated

6.2.3.2 MSS_RST_CAUSE_CLR Register (Offset = 4h) [reset = X]

MSS_RST_CAUSE_CLR is shown in Figure 6-136 and described in Table 6-139.

Return to the Summary Table.

Figure 6-136. MSS_RST_CAUSE_CLR Register

31	30	29	28	27	26	25	24	23	22	21	20	19	18	17	16	15	14	13	12	11	10	9	8	7	6	5	4	3	2	1	0
RESERVED																													clr		
R/W-X																													R/W-0h		

Table 6-139. MSS_RST_CAUSE_CLR Register Field Descriptions

Bit	Field	Type	Reset	Description
31-3	RESERVED	R/W	X	
2-0	clr	R/W	0h	Write pulse bit field: Clear bit for rst cause register (writing '111' will clear the rst cause register)

Copyright © 2025 Texas Instruments Incorporated

6.2.3.3 MSS_RST_STATUS Register (Offset = 8h) [reset = X]

MSS_RST_STATUS is shown in Figure 6-137 and described in Table 6-140.

Return to the Summary Table.

Figure 6-137. MSS_RST_STATUS Register

31	30	29	28	27	26	25	24	23	22	21	20	19	18	17	16	15	14	13	12	11	10	9	8	7	6	5	4	3	2	1	0
RESERVED																cause															
R-X																R-3h															

Table 6-140. MSS_RST_STATUS Register Field Descriptions

Bit	Field	Type	Reset	Description
31-16	RESERVED	R	X	
15-0	cause	R	3h	Has the status because of which reset has happened. Bit0: POR Reset Bit1: Warm Reset Bit2: STC Reset Bit3 Reset for CR5A and MSS_CR5A_VIM using MSS_RCM::MSS_CR5SSA_RST_CTRL Bit4: Reset for CR5B and MSS_CR5B_VIM using MSS_RCM::MSS_CR5SSB_RST_CTRL Bit5: Reset for CR5A only using MSS_RCM::MSS_CR5A_RST_CTRL Bit6: Reset for CR5B only using using MSS_RCM::MSS_CR5B_RST_CTRL Bit7: Reset for CR5A and MSS_CR5A_VIM caused because of reset request by debugger in CR5A Bit8: Reset for CR5B and MSS_CR5B_VIM caused because of reset request by debugger in CR5B Bit9: Reset for CR5SS by the RESET FSM using MSS_CTRL::R5_CONTROL_RESET_FSM_TRIGGER

Copyright © 2025 Texas Instruments Incorporated

6.2.3.4 SYSRST_BY_DBG_RST Register (Offset = Ch) [reset = X]

SYSRST_BY_DBG_RST is shown in Figure 6-138 and described in Table 6-141.

Return to the Summary Table.

Figure 6-138. SYSRST_BY_DBG_RST Register

31	30	29	28	27	26	25	24	23	22	21	20	19	18	17	16	15	14	13	12	11	10	9	8	7	6	5	4	3	2	1	0
RESERVED													r5b			RESERVED													r5a		
R/W-X													R/W-1h			R/W-X													R/W-1h		

Table 6-141. SYSRST_BY_DBG_RST Register Field Descriptions

Bit	Field	Type	Reset	Description
31-19	RESERVED	R/W	X	
18-16	r5b	R/W	1h	writing '000' will block debug reset request from CR5B toggling globally reset for CR5B
15-3	RESERVED	R/W	X	
2-0	r5a	R/W	1h	writing '000' will block debug reset request from CR5A toggling globally reset for CR5A

Copyright © 2025 Texas Instruments Incorporated

6.2.3.5 RST_ASSERDLY Register (Offset = 10h) [reset = X]

RST_ASSERDLY is shown in Figure 6-139 and described in Table 6-142.

Return to the Summary Table.

Figure 6-139. RST_ASSERDLY Register

31	30	29	28	27	26	25	24	23	22	21	20	19	18	17	16	15	14	13	12	11	10	9	8	7	6	5	4	3	2	1	0
RESERVED																								common							
R/W-X																								R/W-Fh							

Table 6-142. RST_ASSERDLY Register Field Descriptions

Bit	Field	Type	Reset	Description
31-8	RESERVED	R/W	X	
7-0	common	R/W	Fh	Value decides number of cycles reset should be asserted for CR5SS related resets

Copyright © 2025 Texas Instruments Incorporated

6.2.3.6 RST2ASSERTDLY Register (Offset = 14h) [reset = 0h]

RST2ASSERTDLY is shown in Figure 6-140 and described in Table 6-143.

Return to the Summary Table.

Figure 6-140. RST2ASSERTDLY Register

31	30	29	28	27	26	25	24	23	22	21	20	19	18	17	16	15	14	13	12	11	10	9	8	7	6	5	4	3	2	1	0
r5b								r5a								r5ssb								r5ssa							
R/W-0h								R/W-0h								R/W-0h								R/W-0h							

Table 6-143. RST2ASSERTDLY Register Field Descriptions

Bit	Field	Type	Reset	Description
31-24	r5b	R/W	0h	Value decides number of cycles should be held before asserting reset for r5ss local reset for CR5B
23-16	r5a	R/W	0h	Value decides number of cycles should be held before asserting reset for r5ss local reset for CR5A
15-8	r5ssb	R/W	0h	Value decides number of cycles should be held before asserting reset for r5ss global reset for CR5B
7-0	r5ssa	R/W	0h	Value decides number of cycles should be held before asserting reset for r5ss global reset for CR5A.

Copyright © 2025 Texas Instruments Incorporated

6.2.3.7 RST_WFICHECK Register (Offset = 18h) [reset = X]

RST_WFICHECK is shown in Figure 6-141 and described in Table 6-144.

Return to the Summary Table.

Figure 6-141. RST_WFICHECK Register

31	30	29	28	27	26	25	24	23	22	21	20	19	18	17	16
RESERVED					r5b			RESERVED					r5a		
R/W-X					R/W-1h			R/W-X					R/W-1h		
15	14	13	12	11	10	9	8	7	6	5	4	3	2	1	0
RESERVED					r5ssb			RESERVED					r5ssa		
R/W-X					R/W-1h			R/W-X					R/W-1h		

Table 6-144. RST_WFICHECK Register Field Descriptions

Bit	Field	Type	Reset	Description
31-27	RESERVED	R/W	X	
26-24	r5b	R/W	1h	writing '000' will disable check for WFI before local reset assertion of CR5A
23-19	RESERVED	R/W	X	
18-16	r5a	R/W	1h	writing '000' will disable check for WFI before local reset assertion of CR5A
15-11	RESERVED	R/W	X	
10-8	r5ssb	R/W	1h	writing '000' will disable check for WFI before global reset assertion of CR5B
7-3	RESERVED	R/W	X	
2-0	r5ssa	R/W	1h	writing '000' will disable check for WFI before global reset assertion of CR5A

Copyright © 2025 Texas Instruments Incorporated

6.2.3.8 MSS_MCANA_CLK_SRC_SEL Register (Offset = 1Ch) [reset = X]

MSS_MCANA_CLK_SRC_SEL is shown in Figure 6-142 and described in Table 6-145.

Return to the Summary Table.

Figure 6-142. MSS_MCANA_CLK_SRC_SEL Register

31	30	29	28	27	26	25	24	23	22	21	20	19	18	17	16	15	14	13	12	11	10	9	8	7	6	5	4	3	2	1	0
RESERVED																				clksrcsel											
R/W-X																				R/W-0h											

Table 6-145. MSS_MCANA_CLK_SRC_SEL Register Field Descriptions

Bit	Field	Type	Reset	Description
31-12	RESERVED	R/W	X	
11-0	clksrcsel	R/W	0h	Select line for selecting source clock for MCANA. Data should be loaded as multibit. For example: if '0x5' should be selected then '0x555' should be configured to the register.

Copyright © 2025 Texas Instruments Incorporated

6.2.3.9 MSS_MCANB_CLK_SRC_SEL Register (Offset = 20h) [reset = X]

MSS_MCANB_CLK_SRC_SEL is shown in Figure 6-143 and described in Table 6-146.

Return to the Summary Table.

Figure 6-143. MSS_MCANB_CLK_SRC_SEL Register

31	30	29	28	27	26	25	24	23	22	21	20	19	18	17	16	15	14	13	12	11	10	9	8	7	6	5	4	3	2	1	0
RESERVED																				clksrcsel											
R/W-X																				R/W-0h											

Table 6-146. MSS_MCANB_CLK_SRC_SEL Register Field Descriptions

Bit	Field	Type	Reset	Description
31-12	RESERVED	R/W	X	
11-0	clksrcsel	R/W	0h	Select line for selecting source clock for MCANB. Data should be loaded as multibit. For example: if '0x5' should be selected then '0x555' should be configured to the register.

Copyright © 2025 Texas Instruments Incorporated

6.2.3.10 MSS_QSPI_CLK_SRC_SEL Register (Offset = 24h) [reset = X]

MSS_QSPI_CLK_SRC_SEL is shown in Figure 6-144 and described in Table 6-147.

Return to the Summary Table.

Figure 6-144. MSS_QSPI_CLK_SRC_SEL Register

31	30	29	28	27	26	25	24	23	22	21	20	19	18	17	16	15	14	13	12	11	10	9	8	7	6	5	4	3	2	1	0
RESERVED																				clksrcsel											
R/W-X																				R/W-0h											

Table 6-147. MSS_QSPI_CLK_SRC_SEL Register Field Descriptions

Bit	Field	Type	Reset	Description
31-12	RESERVED	R/W	X	
11-0	clksrcsel	R/W	0h	Select line for selecting source clock for QSPI. Data should be loaded as multibit. For example: if '0x5' should be selected then '0x555' should be configured to the register.

Copyright © 2025 Texas Instruments Incorporated

6.2.3.11 MSS_RTIA_CLK_SRC_SEL Register (Offset = 28h) [reset = X]

MSS_RTIA_CLK_SRC_SEL is shown in Figure 6-145 and described in Table 6-148.

Return to the Summary Table.

Figure 6-145. MSS_RTIA_CLK_SRC_SEL Register

31	30	29	28	27	26	25	24	23	22	21	20	19	18	17	16	15	14	13	12	11	10	9	8	7	6	5	4	3	2	1	0
RESERVED																				clksrcsel											
R/W-X																				R/W-0h											

Table 6-148. MSS_RTIA_CLK_SRC_SEL Register Field Descriptions

Bit	Field	Type	Reset	Description
31-12	RESERVED	R/W	X	
11-0	clksrcsel	R/W	0h	Select line for selecting source clock for RTIA. Data should be loaded as multibit. For example: if '0x5' should be selected then '0x555' should be configured to the register.

Copyright © 2025 Texas Instruments Incorporated

6.2.3.12 MSS_RTIB_CLK_SRC_SEL Register (Offset = 2Ch) [reset = X]

MSS_RTIB_CLK_SRC_SEL is shown in Figure 6-146 and described in Table 6-149.

Return to the Summary Table.

Figure 6-146. MSS_RTIB_CLK_SRC_SEL Register

31	30	29	28	27	26	25	24	23	22	21	20	19	18	17	16	15	14	13	12	11	10	9	8	7	6	5	4	3	2	1	0
RESERVED																				clksrcsel											
R/W-X																				R/W-0h											

Table 6-149. MSS_RTIB_CLK_SRC_SEL Register Field Descriptions

Bit	Field	Type	Reset	Description
31-12	RESERVED	R/W	X	
11-0	clksrcsel	R/W	0h	Select line for selecting source clock for RTIB. Data should be loaded as multibit. For example: if '0x5' should be selected then '0x555' should be configured to the register.

Copyright © 2025 Texas Instruments Incorporated

6.2.3.13 MSS_RTIC_CLK_SRC_SEL Register (Offset = 30h) [reset = X]

MSS_RTIC_CLK_SRC_SEL is shown in Figure 6-147 and described in Table 6-150.

Return to the Summary Table.

Figure 6-147. MSS_RTIC_CLK_SRC_SEL Register

31	30	29	28	27	26	25	24	23	22	21	20	19	18	17	16	15	14	13	12	11	10	9	8	7	6	5	4	3	2	1	0
RESERVED																				clksrcsel											
R/W-X																				R/W-0h											

Table 6-150. MSS_RTIC_CLK_SRC_SEL Register Field Descriptions

Bit	Field	Type	Reset	Description
31-12	RESERVED	R/W	X	
11-0	clksrcsel	R/W	0h	Select line for selecting source clock for RTIC. Data should be loaded as multibit. For example: if '0x5' should be selected then '0x555' should be configured to the register.

Copyright © 2025 Texas Instruments Incorporated

6.2.3.14 MSS_WDT_CLK_SRC_SEL Register (Offset = 34h) [reset = X]

MSS_WDT_CLK_SRC_SEL is shown in Figure 6-148 and described in Table 6-151.

Return to the Summary Table.

Figure 6-148. MSS_WDT_CLK_SRC_SEL Register

31	30	29	28	27	26	25	24	23	22	21	20	19	18	17	16	15	14	13	12	11	10	9	8	7	6	5	4	3	2	1	0
RESERVED																				clksrcsel											
R/W-X																				R/W-0h											

Table 6-151. MSS_WDT_CLK_SRC_SEL Register Field Descriptions

Bit	Field	Type	Reset	Description
31-12	RESERVED	R/W	X	
11-0	clksrcsel	R/W	0h	Select line for selecting source clock for WDT. Data should be loaded as multibit. For example: if '0x5' should be selected then '0x555' should be configured to the register.

Copyright © 2025 Texas Instruments Incorporated

6.2.3.15 MSS_SPIA_CLK_SRC_SEL Register (Offset = 38h) [reset = X]

MSS_SPIA_CLK_SRC_SEL is shown in Figure 6-149 and described in Table 6-152.

Return to the Summary Table.

Figure 6-149. MSS_SPIA_CLK_SRC_SEL Register

31	30	29	28	27	26	25	24	23	22	21	20	19	18	17	16	15	14	13	12	11	10	9	8	7	6	5	4	3	2	1	0
RESERVED																				clksrcsel											
R/W-X																				R/W-0h											

Table 6-152. MSS_SPIA_CLK_SRC_SEL Register Field Descriptions

Bit	Field	Type	Reset	Description
31-12	RESERVED	R/W	X	
11-0	clksrcsel	R/W	0h	Select line for selecting source clock for SPIA. Data should be loaded as multibit. For example: if '0x5' should be selected then '0x555' should be configured to the register.

Copyright © 2025 Texas Instruments Incorporated

6.2.3.16 MSS_SPIB_CLK_SRC_SEL Register (Offset = 3Ch) [reset = X]

MSS_SPIB_CLK_SRC_SEL is shown in Figure 6-150 and described in Table 6-153.

Return to the Summary Table.

Figure 6-150. MSS_SPIB_CLK_SRC_SEL Register

31	30	29	28	27	26	25	24	23	22	21	20	19	18	17	16	15	14	13	12	11	10	9	8	7	6	5	4	3	2	1	0
RESERVED																				clksrcsel											
R/W-X																				R/W-0h											

Table 6-153. MSS_SPIB_CLK_SRC_SEL Register Field Descriptions

Bit	Field	Type	Reset	Description
31-12	RESERVED	R/W	X	
11-0	clksrcsel	R/W	0h	Select line for selecting source clock for SPIB. Data should be loaded as multibit. For example: if '0x5' should be selected then '0x555' should be configured to the register.

Copyright © 2025 Texas Instruments Incorporated

6.2.3.17 MSS_I2C_CLK_SRC_SEL Register (Offset = 40h) [reset = X]

MSS_I2C_CLK_SRC_SEL is shown in Figure 6-151 and described in Table 6-154.

Return to the Summary Table.

Figure 6-151. MSS_I2C_CLK_SRC_SEL Register

31	30	29	28	27	26	25	24	23	22	21	20	19	18	17	16	15	14	13	12	11	10	9	8	7	6	5	4	3	2	1	0
RESERVED																				clksrcsel											
R/W-X																				R/W-0h											

Table 6-154. MSS_I2C_CLK_SRC_SEL Register Field Descriptions

Bit	Field	Type	Reset	Description
31-12	RESERVED	R/W	X	
11-0	clksrcsel	R/W	0h	Select line for selecting source clock for I2C. Data should be loaded as multibit. For example: if '0x5' should be selected then '0x555' should be configured to the register.

Copyright © 2025 Texas Instruments Incorporated

6.2.3.18 MSS_SCIA_CLK_SRC_SEL Register (Offset = 44h) [reset = X]

MSS_SCIA_CLK_SRC_SEL is shown in Figure 6-152 and described in Table 6-155.

Return to the Summary Table.

Figure 6-152. MSS_SCIA_CLK_SRC_SEL Register

31	30	29	28	27	26	25	24	23	22	21	20	19	18	17	16	15	14	13	12	11	10	9	8	7	6	5	4	3	2	1	0
RESERVED																				clksrcsel											
R/W-X																				R/W-0h											

Table 6-155. MSS_SCIA_CLK_SRC_SEL Register Field Descriptions

Bit	Field	Type	Reset	Description
31-12	RESERVED	R/W	X	
11-0	clksrcsel	R/W	0h	Select line for selecting source clock for SCIA. Data should be loaded as multibit. For example: if '0x5' should be selected then '0x555' should be configured to the register.

Copyright © 2025 Texas Instruments Incorporated

6.2.3.19 MSS_SCIB_CLK_SRC_SEL Register (Offset = 48h) [reset = X]

MSS_SCIB_CLK_SRC_SEL is shown in Figure 6-153 and described in Table 6-156.

Return to the Summary Table.

Figure 6-153. MSS_SCIB_CLK_SRC_SEL Register

31	30	29	28	27	26	25	24	23	22	21	20	19	18	17	16	15	14	13	12	11	10	9	8	7	6	5	4	3	2	1	0
RESERVED																				clksrcsel											
R/W-X																				R/W-0h											

Table 6-156. MSS_SCIB_CLK_SRC_SEL Register Field Descriptions

Bit	Field	Type	Reset	Description
31-12	RESERVED	R/W	X	
11-0	clksrcsel	R/W	0h	Select line for selecting source clock for SCIB. Data should be loaded as multibit. For example: if '0x5' should be selected then '0x555' should be configured to the register.

Copyright © 2025 Texas Instruments Incorporated

6.2.3.20 MSS_CPTS_CLK_SRC_SEL Register (Offset = 4Ch) [reset = X]

MSS_CPTS_CLK_SRC_SEL is shown in Figure 6-154 and described in Table 6-157.

Return to the Summary Table.

Figure 6-154. MSS_CPTS_CLK_SRC_SEL Register

31	30	29	28	27	26	25	24	23	22	21	20	19	18	17	16	15	14	13	12	11	10	9	8	7	6	5	4	3	2	1	0
RESERVED																				clksrcsel											
R/W-X																				R/W-0h											

Table 6-157. MSS_CPTS_CLK_SRC_SEL Register Field Descriptions

Bit	Field	Type	Reset	Description
31-12	RESERVED	R/W	X	
11-0	clksrcsel	R/W	0h	Select line for selecting source clock for CPTS. Data should be loaded as multibit. For example: if '0x5' should be selected then '0x555' should be configured to the register.

Copyright © 2025 Texas Instruments Incorporated

6.2.3.21 MSS_CPSW_CLK_SRC_SEL Register (Offset = 50h) [reset = X]

MSS_CPSW_CLK_SRC_SEL is shown in Figure 6-155 and described in Table 6-158.

Return to the Summary Table.

Figure 6-155. MSS_CPSW_CLK_SRC_SEL Register

31	30	29	28	27	26	25	24	23	22	21	20	19	18	17	16	15	14	13	12	11	10	9	8	7	6	5	4	3	2	1	0
RESERVED																				clksrcsel											
R/W-X																				R/W-0h											

Table 6-158. MSS_CPSW_CLK_SRC_SEL Register Field Descriptions

Bit	Field	Type	Reset	Description
31-12	RESERVED	R/W	X	
11-0	clksrcsel	R/W	0h	Select line for selecting source clock for CPSW. Data should be loaded as multibit. For example: if '0x5' should be selected then '0x555' should be configured to the register.

Copyright © 2025 Texas Instruments Incorporated

6.2.3.22 MSS_MCANA_CLK_DIV_VAL Register (Offset = 54h) [reset = X]

MSS_MCANA_CLK_DIV_VAL is shown in Figure 6-156 and described in Table 6-159.

Return to the Summary Table.

Figure 6-156. MSS_MCANA_CLK_DIV_VAL Register

31	30	29	28	27	26	25	24	23	22	21	20	19	18	17	16	15	14	13	12	11	10	9	8	7	6	5	4	3	2	1	0
RESERVED																				clkdivr											
R/W-X																				R/W-0h											

Table 6-159. MSS_MCANA_CLK_DIV_VAL Register Field Descriptions

Bit	Field	Type	Reset	Description
31-12	RESERVED	R/W	X	
11-0	clkdivr	R/W	0h	Divider value MCANA selected clock.Data should be loaded as multibit. For example: if divider value of 8(1000) should be selected then '100010001000' should be configured to the register. Refer to AM273x clock planner for clock reference

Copyright © 2025 Texas Instruments Incorporated

6.2.3.23 MSS_MCANB_CLK_DIV_VAL Register (Offset = 58h) [reset = X]

MSS_MCANB_CLK_DIV_VAL is shown in Figure 6-157 and described in Table 6-160.

Return to the Summary Table.

Figure 6-157. MSS_MCANB_CLK_DIV_VAL Register

31	30	29	28	27	26	25	24	23	22	21	20	19	18	17	16	15	14	13	12	11	10	9	8	7	6	5	4	3	2	1	0
RESERVED																				clkdivr											
R/W-X																				R/W-0h											

Table 6-160. MSS_MCANB_CLK_DIV_VAL Register Field Descriptions

Bit	Field	Type	Reset	Description
31-12	RESERVED	R/W	X	
11-0	clkdivr	R/W	0h	Divider value MCANB selected clock. Data should be loaded as multibit. For example: if divider value of '0x8' should be selected then '0x888' should be configured to the register.

Copyright © 2025 Texas Instruments Incorporated

6.2.3.24 MSS_QSPI_CLK_DIV_VAL Register (Offset = 5Ch) [reset = X]

MSS_QSPI_CLK_DIV_VAL is shown in Figure 6-158 and described in Table 6-161.

Return to the Summary Table.

Figure 6-158. MSS_QSPI_CLK_DIV_VAL Register

31	30	29	28	27	26	25	24	23	22	21	20	19	18	17	16	15	14	13	12	11	10	9	8	7	6	5	4	3	2	1	0
RESERVED																				clkdivr											
R/W-X																				R/W-0h											

Table 6-161. MSS_QSPI_CLK_DIV_VAL Register Field Descriptions

Bit	Field	Type	Reset	Description
31-12	RESERVED	R/W	X	
11-0	clkdivr	R/W	0h	Divider value QSPI selected clock. Data should be loaded as multibit. For example: if divider value of '0x8' should be selected then '0x888' should be configured to the register.

Copyright © 2025 Texas Instruments Incorporated

6.2.3.25 MSS_RTIA_CLK_DIV_VAL Register (Offset = 60h) [reset = X]

MSS_RTIA_CLK_DIV_VAL is shown in Figure 6-159 and described in Table 6-162.

Return to the Summary Table.

Figure 6-159. MSS_RTIA_CLK_DIV_VAL Register

31	30	29	28	27	26	25	24	23	22	21	20	19	18	17	16	15	14	13	12	11	10	9	8	7	6	5	4	3	2	1	0
RESERVED																				clkdivr											
R/W-X																				R/W-0h											

Table 6-162. MSS_RTIA_CLK_DIV_VAL Register Field Descriptions

Bit	Field	Type	Reset	Description
31-12	RESERVED	R/W	X	
11-0	clkdivr	R/W	0h	Divider value RTIA selected clock. Data should be loaded as multibit. For example: if divider value of '0x8' should be selected then '0x888' should be configured to the register.

Copyright © 2025 Texas Instruments Incorporated

6.2.3.26 MSS_RTIB_CLK_DIV_VAL Register (Offset = 64h) [reset = X]

MSS_RTIB_CLK_DIV_VAL is shown in Figure 6-160 and described in Table 6-163.

Return to the Summary Table.

Figure 6-160. MSS_RTIB_CLK_DIV_VAL Register

31	30	29	28	27	26	25	24	23	22	21	20	19	18	17	16	15	14	13	12	11	10	9	8	7	6	5	4	3	2	1	0
RESERVED																				clkdivr											
R/W-X																				R/W-0h											

Table 6-163. MSS_RTIB_CLK_DIV_VAL Register Field Descriptions

Bit	Field	Type	Reset	Description
31-12	RESERVED	R/W	X	
11-0	clkdivr	R/W	0h	Divider value RTIB selected clock. Data should be loaded as multibit. For example: if divider value of '0x8' should be selected then '0x888' should be configured to the register.

Copyright © 2025 Texas Instruments Incorporated

6.2.3.27 MSS_RTIC_CLK_DIV_VAL Register (Offset = 68h) [reset = X]

MSS_RTIC_CLK_DIV_VAL is shown in Figure 6-161 and described in Table 6-164.

Return to the Summary Table.

Figure 6-161. MSS_RTIC_CLK_DIV_VAL Register

31	30	29	28	27	26	25	24	23	22	21	20	19	18	17	16	15	14	13	12	11	10	9	8	7	6	5	4	3	2	1	0
RESERVED																				clkdivr											
R/W-X																				R/W-0h											

Table 6-164. MSS_RTIC_CLK_DIV_VAL Register Field Descriptions

Bit	Field	Type	Reset	Description
31-12	RESERVED	R/W	X	
11-0	clkdivr	R/W	0h	Divider value RTIC selected clock. Data should be loaded as multibit. For example: if divider value of '0x8' should be selected then '0x888' should be configured to the register.

Copyright © 2025 Texas Instruments Incorporated

6.2.3.28 MSS_WDT_CLK_DIV_VAL Register (Offset = 6Ch) [reset = X]

MSS_WDT_CLK_DIV_VAL is shown in Figure 6-162 and described in Table 6-165.

Return to the Summary Table.

Figure 6-162. MSS_WDT_CLK_DIV_VAL Register

31	30	29	28	27	26	25	24	23	22	21	20	19	18	17	16	15	14	13	12	11	10	9	8	7	6	5	4	3	2	1	0
RESERVED																				clkdivr											
R/W-X																				R/W-0h											

Table 6-165. MSS_WDT_CLK_DIV_VAL Register Field Descriptions

Bit	Field	Type	Reset	Description
31-12	RESERVED	R/W	X	
11-0	clkdivr	R/W	0h	Divider value WDT selected clock. Data should be loaded as multibit. For example: if divider value of '0x8' should be selected then '0x888' should be configured to the register.

Copyright © 2025 Texas Instruments Incorporated

6.2.3.29 MSS_SPIA_CLK_DIV_VAL Register (Offset = 70h) [reset = X]

MSS_SPIA_CLK_DIV_VAL is shown in Figure 6-163 and described in Table 6-166.

Return to the Summary Table.

Figure 6-163. MSS_SPIA_CLK_DIV_VAL Register

31	30	29	28	27	26	25	24	23	22	21	20	19	18	17	16	15	14	13	12	11	10	9	8	7	6	5	4	3	2	1	0
RESERVED																				clkdivr											
R/W-X																				R/W-0h											

Table 6-166. MSS_SPIA_CLK_DIV_VAL Register Field Descriptions

Bit	Field	Type	Reset	Description
31-12	RESERVED	R/W	X	
11-0	clkdivr	R/W	0h	Divider value SPIA selected clock. Data should be loaded as multibit. For example: if divider value of '0x8' should be selected then '0x888' should be configured to the register.

Copyright © 2025 Texas Instruments Incorporated

6.2.3.30 MSS_SPIB_CLK_DIV_VAL Register (Offset = 74h) [reset = X]

MSS_SPIB_CLK_DIV_VAL is shown in Figure 6-164 and described in Table 6-167.

Return to the Summary Table.

Figure 6-164. MSS_SPIB_CLK_DIV_VAL Register

31	30	29	28	27	26	25	24	23	22	21	20	19	18	17	16	15	14	13	12	11	10	9	8	7	6	5	4	3	2	1	0
RESERVED																				clkdivr											
R/W-X																				R/W-0h											

Table 6-167. MSS_SPIB_CLK_DIV_VAL Register Field Descriptions

Bit	Field	Type	Reset	Description
31-12	RESERVED	R/W	X	
11-0	clkdivr	R/W	0h	Divider value SPIB selected clock. Data should be loaded as multibit. For example: if divider value of '0x8' should be selected then '0x888' should be configured to the register.

Copyright © 2025 Texas Instruments Incorporated

6.2.3.31 MSS_I2C_CLK_DIV_VAL Register (Offset = 78h) [reset = X]

MSS_I2C_CLK_DIV_VAL is shown in Figure 6-165 and described in Table 6-168.

Return to the Summary Table.

Figure 6-165. MSS_I2C_CLK_DIV_VAL Register

31	30	29	28	27	26	25	24	23	22	21	20	19	18	17	16	15	14	13	12	11	10	9	8	7	6	5	4	3	2	1	0
RESERVED																				clkdivr											
R/W-X																				R/W-0h											

Table 6-168. MSS_I2C_CLK_DIV_VAL Register Field Descriptions

Bit	Field	Type	Reset	Description
31-12	RESERVED	R/W	X	
11-0	clkdivr	R/W	0h	Divider value I2C selected clock. Data should be loaded as multibit. For example: if divider value of '0x8' should be selected then '0x888' should be configured to the register.

Copyright © 2025 Texas Instruments Incorporated

6.2.3.32 MSS_SCIA_CLK_DIV_VAL Register (Offset = 7Ch) [reset = X]

MSS_SCIA_CLK_DIV_VAL is shown in Figure 6-166 and described in Table 6-169.

Return to the Summary Table.

Figure 6-166. MSS_SCIA_CLK_DIV_VAL Register

31	30	29	28	27	26	25	24	23	22	21	20	19	18	17	16	15	14	13	12	11	10	9	8	7	6	5	4	3	2	1	0
RESERVED																				clkdivr											
R/W-X																				R/W-0h											

Table 6-169. MSS_SCIA_CLK_DIV_VAL Register Field Descriptions

Bit	Field	Type	Reset	Description
31-12	RESERVED	R/W	X	
11-0	clkdivr	R/W	0h	Divider value SCIA selected clock. Data should be loaded as multibit. For example: if divider value of '0x8' should be selected then '0x888' should be configured to the register.

Copyright © 2025 Texas Instruments Incorporated

6.2.3.33 MSS_SCIB_CLK_DIV_VAL Register (Offset = 80h) [reset = X]

MSS_SCIB_CLK_DIV_VAL is shown in Figure 6-167 and described in Table 6-170.

Return to the Summary Table.

Figure 6-167. MSS_SCIB_CLK_DIV_VAL Register

31	30	29	28	27	26	25	24	23	22	21	20	19	18	17	16	15	14	13	12	11	10	9	8	7	6	5	4	3	2	1	0
RESERVED																				clkdivr											
R/W-X																				R/W-0h											

Table 6-170. MSS_SCIB_CLK_DIV_VAL Register Field Descriptions

Bit	Field	Type	Reset	Description
31-12	RESERVED	R/W	X	
11-0	clkdivr	R/W	0h	Divider value SCIB selected clock. Data should be loaded as multibit. For example: if divider value of '0x8' should be selected then '0x888' should be configured to the register.

Copyright © 2025 Texas Instruments Incorporated

6.2.3.34 MSS_CPTS_CLK_DIV_VAL Register (Offset = 84h) [reset = X]

MSS_CPTS_CLK_DIV_VAL is shown in Figure 6-168 and described in Table 6-171.

Return to the Summary Table.

Figure 6-168. MSS_CPTS_CLK_DIV_VAL Register

31	30	29	28	27	26	25	24	23	22	21	20	19	18	17	16	15	14	13	12	11	10	9	8	7	6	5	4	3	2	1	0
RESERVED																				clkdivr											
R/W-X																				R/W-0h											

Table 6-171. MSS_CPTS_CLK_DIV_VAL Register Field Descriptions

Bit	Field	Type	Reset	Description
31-12	RESERVED	R/W	X	
11-0	clkdivr	R/W	0h	Divider value CPTS selected clock. Data should be loaded as multibit. For example: if divider value of '0x8' should be selected then '0x888' should be configured to the register.

Copyright © 2025 Texas Instruments Incorporated

6.2.3.35 MSS_CPSW_CLK_DIV_VAL Register (Offset = 88h) [reset = X]

MSS_CPSW_CLK_DIV_VAL is shown in Figure 6-169 and described in Table 6-172.

Return to the Summary Table.

Figure 6-169. MSS_CPSW_CLK_DIV_VAL Register

31	30	29	28	27	26	25	24	23	22	21	20	19	18	17	16	15	14	13	12	11	10	9	8	7	6	5	4	3	2	1	0
RESERVED																				clkdivr											
R/W-X																				R/W-0h											

Table 6-172. MSS_CPSW_CLK_DIV_VAL Register Field Descriptions

Bit	Field	Type	Reset	Description
31-12	RESERVED	R/W	X	
11-0	clkdivr	R/W	0h	Divider value CPSW selected clock. Data should be loaded as multibit. For example: if divider value of '0x8' should be selected then '0x888' should be configured to the register.

Copyright © 2025 Texas Instruments Incorporated

6.2.3.36 MSS_RGMII_CLK_DIV_VAL Register (Offset = 8Ch) [reset = X]

MSS_RGMII_CLK_DIV_VAL is shown in Figure 6-170 and described in Table 6-173.

Return to the Summary Table.

Figure 6-170. MSS_RGMII_CLK_DIV_VAL Register

31	30	29	28	27	26	25	24	23	22	21	20	19	18	17	16	15	14	13	12	11	10	9	8	7	6	5	4	3	2	1	0
RESERVED																				clkdivr											
R/W-X																				R/W-0h											

Table 6-173. MSS_RGMII_CLK_DIV_VAL Register Field Descriptions

Bit	Field	Type	Reset	Description
31-12	RESERVED	R/W	X	
11-0	clkdivr	R/W	0h	Divider value RGMII selected clock. Data should be loaded as multibit. For example: if divider value of '0x8' should be selected then '0x888' should be configured to the register.

Copyright © 2025 Texas Instruments Incorporated

6.2.3.37 MSS_MII100_CLK_DIV_VAL Register (Offset = 90h) [reset = X]

MSS_MII100_CLK_DIV_VAL is shown in Figure 6-171 and described in Table 6-174.

Return to the Summary Table.

Figure 6-171. MSS_MII100_CLK_DIV_VAL Register

31	30	29	28	27	26	25	24	23	22	21	20	19	18	17	16	15	14	13	12	11	10	9	8	7	6	5	4	3	2	1	0
RESERVED																				clkdivr											
R/W-X																				R/W-0h											

Table 6-174. MSS_MII100_CLK_DIV_VAL Register Field Descriptions

Bit	Field	Type	Reset	Description
31-12	RESERVED	R/W	X	
11-0	clkdivr	R/W	0h	Divider value MII100 selected clock. Data should be loaded as multibit. For example: if divider value of '0x8' should be selected then '0x888' should be configured to the register.

Copyright © 2025 Texas Instruments Incorporated

6.2.3.38 MSS_MII10_CLK_DIV_VAL Register (Offset = 94h) [reset = X]

MSS_MII10_CLK_DIV_VAL is shown in Figure 6-172 and described in Table 6-175.

Return to the Summary Table.

Figure 6-172. MSS_MII10_CLK_DIV_VAL Register

31	30	29	28	27	26	25	24	23	22	21	20	19	18	17	16	15	14	13	12	11	10	9	8	7	6	5	4	3	2	1	0
RESERVED								clkdivr																							
R/W-X								R/W-0h																							

Table 6-175. MSS_MII10_CLK_DIV_VAL Register Field Descriptions

Bit	Field	Type	Reset	Description
31-24	RESERVED	R/W	X	
23-0	clkdivr	R/W	0h	Divider value MII10 selected clock. Data should be loaded as multibit. For example: if divider value of '0x8' should be selected then '0x888' should be configured to the register.

Copyright © 2025 Texas Instruments Incorporated

6.2.3.39 MSS_GPADC_CLK_DIV_VAL Register (Offset = 98h) [reset = X]

MSS_GPADC_CLK_DIV_VAL is shown in Figure 6-173 and described in Table 6-176.

Return to the Summary Table.

Figure 6-173. MSS_GPADC_CLK_DIV_VAL Register

31	30	29	28	27	26	25	24	23	22	21	20	19	18	17	16	15	14	13	12	11	10	9	8	7	6	5	4	3	2	1	0
RESERVED								clkdivr																							
R/W-X								R/W-0h																							

Table 6-176. MSS_GPADC_CLK_DIV_VAL Register Field Descriptions

Bit	Field	Type	Reset	Description
31-24	RESERVED	R/W	X	
23-0	clkdivr	R/W	0h	Divider value GPADC selected clock. Data should be loaded as multibit. For example: if divider value of '0x8' should be selected then '0x888' should be configured to the register.

Copyright © 2025 Texas Instruments Incorporated

6.2.3.40 MSS_MCANA_CLK_GATE Register (Offset = 9Ch) [reset = X]

MSS_MCANA_CLK_GATE is shown in Figure 6-174 and described in Table 6-177.

Return to the Summary Table.

Figure 6-174. MSS_MCANA_CLK_GATE Register

31	30	29	28	27	26	25	24	23	22	21	20	19	18	17	16
RESERVED															
R/W-X															
15	14	13	12	11	10	9	8	7	6	5	4	3	2	1	0
RESERVED													gated		
R/W-X													R/W-0h		

Table 6-177. MSS_MCANA_CLK_GATE Register Field Descriptions

Bit	Field	Type	Reset	Description
31-3	RESERVED	R/W	X	
2-0	gated	R/W	0h	writing '111' will gate clock for MCANA

Copyright © 2025 Texas Instruments Incorporated

6.2.3.41 MSS_MCANB_CLK_GATE Register (Offset = A0h) [reset = X]

MSS_MCANB_CLK_GATE is shown in Figure 6-175 and described in Table 6-178.

Return to the Summary Table.

Figure 6-175. MSS_MCANB_CLK_GATE Register

31	30	29	28	27	26	25	24	23	22	21	20	19	18	17	16
RESERVED															
R/W-X															
15	14	13	12	11	10	9	8	7	6	5	4	3	2	1	0
RESERVED													gated		
R/W-X													R/W-0h		

Table 6-178. MSS_MCANB_CLK_GATE Register Field Descriptions

Bit	Field	Type	Reset	Description
31-3	RESERVED	R/W	X	
2-0	gated	R/W	0h	writing '111' will gate clock for MCANB

Copyright © 2025 Texas Instruments Incorporated

6.2.3.42 MSS_QSPI_CLK_GATE Register (Offset = A4h) [reset = X]

MSS_QSPI_CLK_GATE is shown in Figure 6-176 and described in Table 6-179.

Return to the Summary Table.

Figure 6-176. MSS_QSPI_CLK_GATE Register

31	30	29	28	27	26	25	24	23	22	21	20	19	18	17	16
RESERVED															
R/W-X															
15	14	13	12	11	10	9	8	7	6	5	4	3	2	1	0
RESERVED													gated		
R/W-X													R/W-0h		

Table 6-179. MSS_QSPI_CLK_GATE Register Field Descriptions

Bit	Field	Type	Reset	Description
31-3	RESERVED	R/W	X	
2-0	gated	R/W	0h	writing '111' will gate clock for QSPI

Copyright © 2025 Texas Instruments Incorporated

6.2.3.43 MSS_RTIA_CLK_GATE Register (Offset = A8h) [reset = X]

MSS_RTIA_CLK_GATE is shown in Figure 6-177 and described in Table 6-180.

Return to the Summary Table.

Figure 6-177. MSS_RTIA_CLK_GATE Register

31	30	29	28	27	26	25	24	23	22	21	20	19	18	17	16
RESERVED															
R/W-X															
15	14	13	12	11	10	9	8	7	6	5	4	3	2	1	0
RESERVED													gated		
R/W-X													R/W-0h		

Table 6-180. MSS_RTIA_CLK_GATE Register Field Descriptions

Bit	Field	Type	Reset	Description
31-3	RESERVED	R/W	X	
2-0	gated	R/W	0h	writing '111' will gate clock for RTIA

Copyright © 2025 Texas Instruments Incorporated

6.2.3.44 MSS_RTIB_CLK_GATE Register (Offset = ACh) [reset = X]

MSS_RTIB_CLK_GATE is shown in Figure 6-178 and described in Table 6-181.

Return to the Summary Table.

Figure 6-178. MSS_RTIB_CLK_GATE Register

31	30	29	28	27	26	25	24	23	22	21	20	19	18	17	16
RESERVED															
R/W-X															
15	14	13	12	11	10	9	8	7	6	5	4	3	2	1	0
RESERVED													gated		
R/W-X													R/W-0h		

Table 6-181. MSS_RTIB_CLK_GATE Register Field Descriptions

Bit	Field	Type	Reset	Description
31-3	RESERVED	R/W	X	
2-0	gated	R/W	0h	writing '111' will gate clock for RTIB

Copyright © 2025 Texas Instruments Incorporated

6.2.3.45 MSS_RTIC_CLK_GATE Register (Offset = B0h) [reset = X]

MSS_RTIC_CLK_GATE is shown in Figure 6-179 and described in Table 6-182.

Return to the Summary Table.

Figure 6-179. MSS_RTIC_CLK_GATE Register

31	30	29	28	27	26	25	24	23	22	21	20	19	18	17	16
RESERVED															
R/W-X															
15	14	13	12	11	10	9	8	7	6	5	4	3	2	1	0
RESERVED													gated		
R/W-X													R/W-0h		

Table 6-182. MSS_RTIC_CLK_GATE Register Field Descriptions

Bit	Field	Type	Reset	Description
31-3	RESERVED	R/W	X	
2-0	gated	R/W	0h	writing '111' will gate clock for RTIC

Copyright © 2025 Texas Instruments Incorporated

6.2.3.46 MSS_WDT_CLK_GATE Register (Offset = B4h) [reset = X]

MSS_WDT_CLK_GATE is shown in Figure 6-180 and described in Table 6-183.

Return to the Summary Table.

Figure 6-180. MSS_WDT_CLK_GATE Register

31	30	29	28	27	26	25	24	23	22	21	20	19	18	17	16
RESERVED															
R/W-X															
15	14	13	12	11	10	9	8	7	6	5	4	3	2	1	0
RESERVED													gated		
R/W-X													R/W-0h		

Table 6-183. MSS_WDT_CLK_GATE Register Field Descriptions

Bit	Field	Type	Reset	Description
31-3	RESERVED	R/W	X	
2-0	gated	R/W	0h	writing '111' will gate clock for WDT

Copyright © 2025 Texas Instruments Incorporated

6.2.3.47 MSS_SPIA_CLK_GATE Register (Offset = B8h) [reset = X]

MSS_SPIA_CLK_GATE is shown in Figure 6-181 and described in Table 6-184.

Return to the Summary Table.

Figure 6-181. MSS_SPIA_CLK_GATE Register

31	30	29	28	27	26	25	24	23	22	21	20	19	18	17	16
RESERVED															
R/W-X															
15	14	13	12	11	10	9	8	7	6	5	4	3	2	1	0
RESERVED													gated		
R/W-X													R/W-0h		

Table 6-184. MSS_SPIA_CLK_GATE Register Field Descriptions

Bit	Field	Type	Reset	Description
31-3	RESERVED	R/W	X	
2-0	gated	R/W	0h	writing '111' will gate clock for SPIA

Copyright © 2025 Texas Instruments Incorporated

6.2.3.48 MSS_SPIB_CLK_GATE Register (Offset = BCh) [reset = X]

MSS_SPIB_CLK_GATE is shown in Figure 6-182 and described in Table 6-185.

Return to the Summary Table.

Figure 6-182. MSS_SPIB_CLK_GATE Register

31	30	29	28	27	26	25	24	23	22	21	20	19	18	17	16
RESERVED															
R/W-X															
15	14	13	12	11	10	9	8	7	6	5	4	3	2	1	0
RESERVED													gated		
R/W-X													R/W-0h		

Table 6-185. MSS_SPIB_CLK_GATE Register Field Descriptions

Bit	Field	Type	Reset	Description
31-3	RESERVED	R/W	X	
2-0	gated	R/W	0h	writing '111' will gate clock for SPIB

Copyright © 2025 Texas Instruments Incorporated

6.2.3.49 MSS_I2C_CLK_GATE Register (Offset = C0h) [reset = X]

MSS_I2C_CLK_GATE is shown in Figure 6-183 and described in Table 6-186.

Return to the Summary Table.

Figure 6-183. MSS_I2C_CLK_GATE Register

31	30	29	28	27	26	25	24	23	22	21	20	19	18	17	16
RESERVED															
R/W-X															
15	14	13	12	11	10	9	8	7	6	5	4	3	2	1	0
RESERVED													gated		
R/W-X													R/W-0h		

Table 6-186. MSS_I2C_CLK_GATE Register Field Descriptions

Bit	Field	Type	Reset	Description
31-3	RESERVED	R/W	X	
2-0	gated	R/W	0h	writing '111' will gate clock for I2C

Copyright © 2025 Texas Instruments Incorporated

6.2.3.50 MSS_SCIA_CLK_GATE Register (Offset = C4h) [reset = X]

MSS_SCIA_CLK_GATE is shown in Figure 6-184 and described in Table 6-187.

Return to the Summary Table.

Figure 6-184. MSS_SCIA_CLK_GATE Register

31	30	29	28	27	26	25	24	23	22	21	20	19	18	17	16
RESERVED															
R/W-X															
15	14	13	12	11	10	9	8	7	6	5	4	3	2	1	0
RESERVED													gated		
R/W-X													R/W-0h		

Table 6-187. MSS_SCIA_CLK_GATE Register Field Descriptions

Bit	Field	Type	Reset	Description
31-3	RESERVED	R/W	X	
2-0	gated	R/W	0h	writing '111' will gate clock for SCIA

Copyright © 2025 Texas Instruments Incorporated

6.2.3.51 MSS_SCIB_CLK_GATE Register (Offset = C8h) [reset = X]

MSS_SCIB_CLK_GATE is shown in Figure 6-185 and described in Table 6-188.

Return to the Summary Table.

Figure 6-185. MSS_SCIB_CLK_GATE Register

31	30	29	28	27	26	25	24	23	22	21	20	19	18	17	16
RESERVED															
R/W-X															
15	14	13	12	11	10	9	8	7	6	5	4	3	2	1	0
RESERVED													gated		
R/W-X													R/W-0h		

Table 6-188. MSS_SCIB_CLK_GATE Register Field Descriptions

Bit	Field	Type	Reset	Description
31-3	RESERVED	R/W	X	
2-0	gated	R/W	0h	writing '111' will gate clock for SCIB

Copyright © 2025 Texas Instruments Incorporated

6.2.3.52 MSS_CPTS_CLK_GATE Register (Offset = CCh) [reset = X]

MSS_CPTS_CLK_GATE is shown in Figure 6-186 and described in Table 6-189.

Return to the Summary Table.

Figure 6-186. MSS_CPTS_CLK_GATE Register

31	30	29	28	27	26	25	24	23	22	21	20	19	18	17	16
RESERVED															
R/W-X															
15	14	13	12	11	10	9	8	7	6	5	4	3	2	1	0
RESERVED													gated		
R/W-X													R/W-0h		

Table 6-189. MSS_CPTS_CLK_GATE Register Field Descriptions

Bit	Field	Type	Reset	Description
31-3	RESERVED	R/W	X	
2-0	gated	R/W	0h	writing '111' will gate clock for CPTS

Copyright © 2025 Texas Instruments Incorporated

6.2.3.53 MSS_CPSW_CLK_GATE Register (Offset = D0h) [reset = X]

MSS_CPSW_CLK_GATE is shown in Figure 6-187 and described in Table 6-190.

Return to the Summary Table.

Figure 6-187. MSS_CPSW_CLK_GATE Register

31	30	29	28	27	26	25	24	23	22	21	20	19	18	17	16
RESERVED															
R/W-X															
15	14	13	12	11	10	9	8	7	6	5	4	3	2	1	0
RESERVED													gated		
R/W-X													R/W-0h		

Table 6-190. MSS_CPSW_CLK_GATE Register Field Descriptions

Bit	Field	Type	Reset	Description
31-3	RESERVED	R/W	X	
2-0	gated	R/W	0h	writing '111' will gate clock for CPSW

Copyright © 2025 Texas Instruments Incorporated

6.2.3.54 MSS_RGMII_CLK_GATE Register (Offset = D4h) [reset = X]

MSS_RGMII_CLK_GATE is shown in Figure 6-188 and described in Table 6-191.

Return to the Summary Table.

Figure 6-188. MSS_RGMII_CLK_GATE Register

31	30	29	28	27	26	25	24	23	22	21	20	19	18	17	16
RESERVED															
R/W-X															
15	14	13	12	11	10	9	8	7	6	5	4	3	2	1	0
RESERVED													gated		
R/W-X													R/W-0h		

Table 6-191. MSS_RGMII_CLK_GATE Register Field Descriptions

Bit	Field	Type	Reset	Description
31-3	RESERVED	R/W	X	
2-0	gated	R/W	0h	writing '111' will gate clock for RGMII

Copyright © 2025 Texas Instruments Incorporated

6.2.3.55 MSS_MII100_CLK_GATE Register (Offset = D8h) [reset = X]

MSS_MII100_CLK_GATE is shown in Figure 6-189 and described in Table 6-192.

Return to the Summary Table.

Figure 6-189. MSS_MII100_CLK_GATE Register

31	30	29	28	27	26	25	24	23	22	21	20	19	18	17	16
RESERVED															
R/W-X															
15	14	13	12	11	10	9	8	7	6	5	4	3	2	1	0
RESERVED													gated		
R/W-X													R/W-0h		

Table 6-192. MSS_MII100_CLK_GATE Register Field Descriptions

Bit	Field	Type	Reset	Description
31-3	RESERVED	R/W	X	
2-0	gated	R/W	0h	writing '111' will gate clock for MII100

Copyright © 2025 Texas Instruments Incorporated

6.2.3.56 MSS_MII10_CLK_GATE Register (Offset = DCh) [reset = X]

MSS_MII10_CLK_GATE is shown in Figure 6-190 and described in Table 6-193.

Return to the Summary Table.

Figure 6-190. MSS_MII10_CLK_GATE Register

31	30	29	28	27	26	25	24	23	22	21	20	19	18	17	16
RESERVED															
R/W-X															
15	14	13	12	11	10	9	8	7	6	5	4	3	2	1	0
RESERVED													gated		
R/W-X													R/W-0h		

Table 6-193. MSS_MII10_CLK_GATE Register Field Descriptions

Bit	Field	Type	Reset	Description
31-3	RESERVED	R/W	X	
2-0	gated	R/W	0h	writing '111' will gate clock for MII10

Copyright © 2025 Texas Instruments Incorporated

6.2.3.57 MSS_GPADC_CLK_GATE Register (Offset = E0h) [reset = X]

MSS_GPADC_CLK_GATE is shown in Figure 6-191 and described in Table 6-194.

Return to the Summary Table.

Figure 6-191. MSS_GPADC_CLK_GATE Register

31	30	29	28	27	26	25	24	23	22	21	20	19	18	17	16
RESERVED															
R/W-X															
15	14	13	12	11	10	9	8	7	6	5	4	3	2	1	0
RESERVED													gated		
R/W-X													R/W-0h		

Table 6-194. MSS_GPADC_CLK_GATE Register Field Descriptions

Bit	Field	Type	Reset	Description
31-3	RESERVED	R/W	X	
2-0	gated	R/W	0h	writing '111' will gate clock for MSS GPADC

Copyright © 2025 Texas Instruments Incorporated

6.2.3.58 MSS_MCANA_CLK_STATUS Register (Offset = E4h) [reset = X]

MSS_MCANA_CLK_STATUS is shown in Figure 6-192 and described in Table 6-195.

Return to the Summary Table.

Figure 6-192. MSS_MCANA_CLK_STATUS Register

31	30	29	28	27	26	25	24	23	22	21	20	19	18	17	16
RESERVED															
R-X															
15	14	13	12	11	10	9	8	7	6	5	4	3	2	1	0
currdivider								clkinuse							
R-0h								R-0h							

Table 6-195. MSS_MCANA_CLK_STATUS Register Field Descriptions

Bit	Field	Type	Reset	Description
31-16	RESERVED	R	X	
15-8	currdivider	R	0h	Status shows the current divider value chosen for MCANA
7-0	clkinuse	R	0h	Status shows the source clock selected for MCANA

Copyright © 2025 Texas Instruments Incorporated

6.2.3.59 MSS_MCANB_CLK_STATUS Register (Offset = E8h) [reset = X]

MSS_MCANB_CLK_STATUS is shown in Figure 6-193 and described in Table 6-196.

Return to the Summary Table.

Figure 6-193. MSS_MCANB_CLK_STATUS Register

31	30	29	28	27	26	25	24	23	22	21	20	19	18	17	16
RESERVED															
R-X															
15	14	13	12	11	10	9	8	7	6	5	4	3	2	1	0
currdivider								clkinuse							
R-0h								R-0h							

Table 6-196. MSS_MCANB_CLK_STATUS Register Field Descriptions

Bit	Field	Type	Reset	Description
31-16	RESERVED	R	X	
15-8	currdivider	R	0h	Status shows the current divider value chosen for MCANB
7-0	clkinuse	R	0h	Status shows the source clock selected for MCANB

Copyright © 2025 Texas Instruments Incorporated

6.2.3.60 MSS_QSPI_CLK_STATUS Register (Offset = ECh) [reset = X]

MSS_QSPI_CLK_STATUS is shown in Figure 6-194 and described in Table 6-197.

Return to the Summary Table.

Figure 6-194. MSS_QSPI_CLK_STATUS Register

31	30	29	28	27	26	25	24	23	22	21	20	19	18	17	16
RESERVED															
R-X															
15	14	13	12	11	10	9	8	7	6	5	4	3	2	1	0
currdivider								clkinuse							
R-0h								R-0h							

Table 6-197. MSS_QSPI_CLK_STATUS Register Field Descriptions

Bit	Field	Type	Reset	Description
31-16	RESERVED	R	X	
15-8	currdivider	R	0h	Status shows the current divider value chosen for QSPI
7-0	clkinuse	R	0h	Status shows the source clock selected for QSPI

Copyright © 2025 Texas Instruments Incorporated

6.2.3.61 MSS_RTIA_CLK_STATUS Register (Offset = F0h) [reset = X]

MSS_RTIA_CLK_STATUS is shown in Figure 6-195 and described in Table 6-198.

Return to the Summary Table.

Figure 6-195. MSS_RTIA_CLK_STATUS Register

31	30	29	28	27	26	25	24	23	22	21	20	19	18	17	16
RESERVED															
R-X															
15	14	13	12	11	10	9	8	7	6	5	4	3	2	1	0
currdivider								clkinuse							
R-0h								R-0h							

Table 6-198. MSS_RTIA_CLK_STATUS Register Field Descriptions

Bit	Field	Type	Reset	Description
31-16	RESERVED	R	X	
15-8	currdivider	R	0h	Status shows the current divider value chosen for RTIA
7-0	clkinuse	R	0h	Status shows the source clock selected for RTIA

Copyright © 2025 Texas Instruments Incorporated

6.2.3.62 MSS_RTIB_CLK_STATUS Register (Offset = F4h) [reset = X]

MSS_RTIB_CLK_STATUS is shown in Figure 6-196 and described in Table 6-199.

Return to the Summary Table.

Figure 6-196. MSS_RTIB_CLK_STATUS Register

31	30	29	28	27	26	25	24	23	22	21	20	19	18	17	16
RESERVED															
R-X															
15	14	13	12	11	10	9	8	7	6	5	4	3	2	1	0
currdivider								clkinuse							
R-0h								R-1h							

Table 6-199. MSS_RTIB_CLK_STATUS Register Field Descriptions

Bit	Field	Type	Reset	Description
31-16	RESERVED	R	X	
15-8	currdivider	R	0h	Status shows the current divider value chosen for RTIB
7-0	clkinuse	R	1h	Status shows the source clock selected for RTIB

Copyright © 2025 Texas Instruments Incorporated

6.2.3.63 MSS_RTIC_CLK_STATUS Register (Offset = F8h) [reset = X]

MSS_RTIC_CLK_STATUS is shown in Figure 6-197 and described in Table 6-200.

Return to the Summary Table.

Figure 6-197. MSS_RTIC_CLK_STATUS Register

31	30	29	28	27	26	25	24	23	22	21	20	19	18	17	16
RESERVED															
R-X															
15	14	13	12	11	10	9	8	7	6	5	4	3	2	1	0
currdivider								clkinuse							
R-0h								R-1h							

Table 6-200. MSS_RTIC_CLK_STATUS Register Field Descriptions

Bit	Field	Type	Reset	Description
31-16	RESERVED	R	X	
15-8	currdivider	R	0h	Status shows the current divider value chosen for RTIC
7-0	clkinuse	R	1h	Status shows the source clock selected for RTIC

Copyright © 2025 Texas Instruments Incorporated

6.2.3.64 MSS_WDT_CLK_STATUS Register (Offset = FCh) [reset = X]

MSS_WDT_CLK_STATUS is shown in Figure 6-198 and described in Table 6-201.

Return to the Summary Table.

Figure 6-198. MSS_WDT_CLK_STATUS Register

31	30	29	28	27	26	25	24	23	22	21	20	19	18	17	16
RESERVED															
R-X															
15	14	13	12	11	10	9	8	7	6	5	4	3	2	1	0
currdivider								clkinuse							
R-0h								R-1h							

Table 6-201. MSS_WDT_CLK_STATUS Register Field Descriptions

Bit	Field	Type	Reset	Description
31-16	RESERVED	R	X	
15-8	currdivider	R	0h	Status shows the current divider value chosen for WDT
7-0	clkinuse	R	1h	Status shows the source clock selected for WDT

Copyright © 2025 Texas Instruments Incorporated

6.2.3.65 MSS_SPIA_CLK_STATUS Register (Offset = 100h) [reset = X]

MSS_SPIA_CLK_STATUS is shown in Figure 6-199 and described in Table 6-202.

Return to the Summary Table.

Figure 6-199. MSS_SPIA_CLK_STATUS Register

31	30	29	28	27	26	25	24	23	22	21	20	19	18	17	16
RESERVED															
R-X															
15	14	13	12	11	10	9	8	7	6	5	4	3	2	1	0
currdivider								clkinuse							
R-0h								R-1h							

Table 6-202. MSS_SPIA_CLK_STATUS Register Field Descriptions

Bit	Field	Type	Reset	Description
31-16	RESERVED	R	X	
15-8	currdivider	R	0h	Status shows the current divider value chosen for SPIA
7-0	clkinuse	R	1h	Status shows the source clock selected for SPIA

Copyright © 2025 Texas Instruments Incorporated

6.2.3.66 MSS_SPIB_CLK_STATUS Register (Offset = 104h) [reset = X]

MSS_SPIB_CLK_STATUS is shown in Figure 6-200 and described in Table 6-203.

Return to the Summary Table.

Figure 6-200. MSS_SPIB_CLK_STATUS Register

31	30	29	28	27	26	25	24	23	22	21	20	19	18	17	16
RESERVED															
R-X															
15	14	13	12	11	10	9	8	7	6	5	4	3	2	1	0
currdivider								clkinuse							
R-0h								R-1h							

Table 6-203. MSS_SPIB_CLK_STATUS Register Field Descriptions

Bit	Field	Type	Reset	Description
31-16	RESERVED	R	X	
15-8	currdivider	R	0h	Status shows the current divider value chosen for SPIB
7-0	clkinuse	R	1h	Status shows the source clock selected for SPIB

Copyright © 2025 Texas Instruments Incorporated

6.2.3.67 MSS_I2C_CLK_STATUS Register (Offset = 108h) [reset = X]

MSS_I2C_CLK_STATUS is shown in Figure 6-201 and described in Table 6-204.

Return to the Summary Table.

Figure 6-201. MSS_I2C_CLK_STATUS Register

31	30	29	28	27	26	25	24	23	22	21	20	19	18	17	16
RESERVED															
R-X															
15	14	13	12	11	10	9	8	7	6	5	4	3	2	1	0
currdivider								clkinuse							
R-0h								R-1h							

Table 6-204. MSS_I2C_CLK_STATUS Register Field Descriptions

Bit	Field	Type	Reset	Description
31-16	RESERVED	R	X	
15-8	currdivider	R	0h	Status shows the current divider value chosen for I2C
7-0	clkinuse	R	1h	Status shows the source clock selected for I2C

Copyright © 2025 Texas Instruments Incorporated

6.2.3.68 MSS_SCIA_CLK_STATUS Register (Offset = 10Ch) [reset = X]

MSS_SCIA_CLK_STATUS is shown in Figure 6-202 and described in Table 6-205.

Return to the Summary Table.

Figure 6-202. MSS_SCIA_CLK_STATUS Register

31	30	29	28	27	26	25	24	23	22	21	20	19	18	17	16
RESERVED															
R-X															
15	14	13	12	11	10	9	8	7	6	5	4	3	2	1	0
currdivider								clkinuse							
R-0h								R-1h							

Table 6-205. MSS_SCIA_CLK_STATUS Register Field Descriptions

Bit	Field	Type	Reset	Description
31-16	RESERVED	R	X	
15-8	currdivider	R	0h	Status shows the current divider value chosen for SCIA
7-0	clkinuse	R	1h	Status shows the source clock selected for SCIA

Copyright © 2025 Texas Instruments Incorporated

6.2.3.69 MSS_SCIB_CLK_STATUS Register (Offset = 110h) [reset = X]

MSS_SCIB_CLK_STATUS is shown in Figure 6-203 and described in Table 6-206.

Return to the Summary Table.

Figure 6-203. MSS_SCIB_CLK_STATUS Register

31	30	29	28	27	26	25	24	23	22	21	20	19	18	17	16
RESERVED															
R-X															
15	14	13	12	11	10	9	8	7	6	5	4	3	2	1	0
currdivider								clkinuse							
R-0h								R-1h							

Table 6-206. MSS_SCIB_CLK_STATUS Register Field Descriptions

Bit	Field	Type	Reset	Description
31-16	RESERVED	R	X	
15-8	currdivider	R	0h	Status shows the current divider value chosen for SCIB
7-0	clkinuse	R	1h	Status shows the source clock selected for SCIB

Copyright © 2025 Texas Instruments Incorporated

6.2.3.70 MSS_CPTS_CLK_STATUS Register (Offset = 114h) [reset = X]

MSS_CPTS_CLK_STATUS is shown in Figure 6-204 and described in Table 6-207.

Return to the Summary Table.

Figure 6-204. MSS_CPTS_CLK_STATUS Register

31	30	29	28	27	26	25	24	23	22	21	20	19	18	17	16
RESERVED															
R-X															
15	14	13	12	11	10	9	8	7	6	5	4	3	2	1	0
currdivider								clkinuse							
R-0h								R-1h							

Table 6-207. MSS_CPTS_CLK_STATUS Register Field Descriptions

Bit	Field	Type	Reset	Description
31-16	RESERVED	R	X	
15-8	currdivider	R	0h	Status shows the current divider value chosen for CPTS
7-0	clkinuse	R	1h	Status shows the source clock selected for CPTS

Copyright © 2025 Texas Instruments Incorporated

6.2.3.71 MSS_CPSW_CLK_STATUS Register (Offset = 118h) [reset = X]

MSS_CPSW_CLK_STATUS is shown in Figure 6-205 and described in Table 6-208.

Return to the Summary Table.

Figure 6-205. MSS_CPSW_CLK_STATUS Register

31	30	29	28	27	26	25	24	23	22	21	20	19	18	17	16
RESERVED															
R-X															
15	14	13	12	11	10	9	8	7	6	5	4	3	2	1	0
currdivider								clkinuse							
R-0h								R-1h							

Table 6-208. MSS_CPSW_CLK_STATUS Register Field Descriptions

Bit	Field	Type	Reset	Description
31-16	RESERVED	R	X	
15-8	currdivider	R	0h	Status shows the current divider value chosen for CPSW
7-0	clkinuse	R	1h	Status shows the source clock selected for CPSW

Copyright © 2025 Texas Instruments Incorporated

6.2.3.72 MSS_RGMII_CLK_STATUS Register (Offset = 11Ch) [reset = X]

MSS_RGMII_CLK_STATUS is shown in Figure 6-206 and described in Table 6-209.

Return to the Summary Table.

Figure 6-206. MSS_RGMII_CLK_STATUS Register

31	30	29	28	27	26	25	24	23	22	21	20	19	18	17	16
RESERVED															
R-X															
15	14	13	12	11	10	9	8	7	6	5	4	3	2	1	0
currdivider								RESERVED							
R-0h								R-X							

Table 6-209. MSS_RGMII_CLK_STATUS Register Field Descriptions

Bit	Field	Type	Reset	Description
31-16	RESERVED	R	X	
15-8	currdivider	R	0h	Status shows the current divider value chosen for RGMII
7-0	RESERVED	R	X	

Copyright © 2025 Texas Instruments Incorporated

6.2.3.73 MSS_MII100_CLK_STATUS Register (Offset = 120h) [reset = X]

MSS_MII100_CLK_STATUS is shown in Figure 6-207 and described in Table 6-210.

Return to the Summary Table.

Figure 6-207. MSS_MII100_CLK_STATUS Register

31	30	29	28	27	26	25	24	23	22	21	20	19	18	17	16
RESERVED															
R-X															
15	14	13	12	11	10	9	8	7	6	5	4	3	2	1	0
currdivider								RESERVED							
R-0h								R-X							

Table 6-210. MSS_MII100_CLK_STATUS Register Field Descriptions

Bit	Field	Type	Reset	Description
31-16	RESERVED	R	X	
15-8	currdivider	R	0h	Status shows the current divider value chosen for MII100
7-0	RESERVED	R	X	

Copyright © 2025 Texas Instruments Incorporated

6.2.3.74 MSS_MII10_CLK_STATUS Register (Offset = 124h) [reset = X]

MSS_MII10_CLK_STATUS is shown in Figure 6-208 and described in Table 6-211.

Return to the Summary Table.

Figure 6-208. MSS_MII10_CLK_STATUS Register

31	30	29	28	27	26	25	24	23	22	21	20	19	18	17	16
RESERVED															
R-X															
15	14	13	12	11	10	9	8	7	6	5	4	3	2	1	0
currdivider								RESERVED							
R-0h								R-X							

Table 6-211. MSS_MII10_CLK_STATUS Register Field Descriptions

Bit	Field	Type	Reset	Description
31-16	RESERVED	R	X	
15-8	currdivider	R	0h	Status shows the current divider value chosen for MII10
7-0	RESERVED	R	X	

Copyright © 2025 Texas Instruments Incorporated

6.2.3.75 MSS_GPADC_CLK_STATUS Register (Offset = 128h) [reset = X]

MSS_GPADC_CLK_STATUS is shown in Figure 6-209 and described in Table 6-212.

Return to the Summary Table.

Figure 6-209. MSS_GPADC_CLK_STATUS Register

31	30	29	28	27	26	25	24	23	22	21	20	19	18	17	16
RESERVED															
R-X															
15	14	13	12	11	10	9	8	7	6	5	4	3	2	1	0
currdivider								RESERVED							
R-0h								R-X							

Table 6-212. MSS_GPADC_CLK_STATUS Register Field Descriptions

Bit	Field	Type	Reset	Description
31-16	RESERVED	R	X	
15-8	currdivider	R	0h	Status shows the current divider value chosen for GPADC
7-0	RESERVED	R	X	

Copyright © 2025 Texas Instruments Incorporated

6.2.3.76 MSS_CR5SS_POR_RST_CTRL Register (Offset = 12Ch) [reset = X]

MSS_CR5SS_POR_RST_CTRL is shown in Figure 6-210 and described in Table 6-213.

Return to the Summary Table.

Figure 6-210. MSS_CR5SS_POR_RST_CTRL Register

31	30	29	28	27	26	25	24	23	22	21	20	19	18	17	16
RESERVED															
R/W-X															
15	14	13	12	11	10	9	8	7	6	5	4	3	2	1	0
RESERVED													assert		
R/W-X													R/W-0h		

Table 6-213. MSS_CR5SS_POR_RST_CTRL Register Field Descriptions

Bit	Field	Type	Reset	Description
31-3	RESERVED	R/W	X	
2-0	assert	R/W	0h	This feature is for debug purpose only. Software needs to ensure the state of the Device/IP before configuring. Write pulse bit field: writing '111' will assert por reset to R5SS

Copyright © 2025 Texas Instruments Incorporated

6.2.3.77 MSS_CR5SSA_RST_CTRL Register (Offset = 130h) [reset = X]

MSS_CR5SSA_RST_CTRL is shown in Figure 6-211 and described in Table 6-214.

Return to the Summary Table.

Figure 6-211. MSS_CR5SSA_RST_CTRL Register

31	30	29	28	27	26	25	24	23	22	21	20	19	18	17	16
RESERVED															
R/W-X															
15	14	13	12	11	10	9	8	7	6	5	4	3	2	1	0
RESERVED													assert		
R/W-X													R/W-0h		

Table 6-214. MSS_CR5SSA_RST_CTRL Register Field Descriptions

Bit	Field	Type	Reset	Description
31-3	RESERVED	R/W	X	
2-0	assert	R/W	0h	This feature is for debug purpose only. Software needs to ensure the state of the Device/IP before configuring. Write pulse bit field: writing '111' will reset CR5A and MSS_CR5A_VIM

Copyright © 2025 Texas Instruments Incorporated

6.2.3.78 MSS_CR5SSB_RST_CTRL Register (Offset = 134h) [reset = X]

MSS_CR5SSB_RST_CTRL is shown in Figure 6-212 and described in Table 6-215.

Return to the Summary Table.

Figure 6-212. MSS_CR5SSB_RST_CTRL Register

31	30	29	28	27	26	25	24	23	22	21	20	19	18	17	16
RESERVED															
R/W-X															
15	14	13	12	11	10	9	8	7	6	5	4	3	2	1	0
RESERVED													assert		
R/W-X													R/W-0h		

Table 6-215. MSS_CR5SSB_RST_CTRL Register Field Descriptions

Bit	Field	Type	Reset	Description
31-3	RESERVED	R/W	X	
2-0	assert	R/W	0h	This feature is for debug purpose only. Software needs to ensure the state of the Device/IP before configuring. Write pulse bit field: writing '111' will reset CR5B and MSS_CR5B_VIM

Copyright © 2025 Texas Instruments Incorporated

6.2.3.79 MSS_CR5A_RST_CTRL Register (Offset = 138h) [reset = X]

MSS_CR5A_RST_CTRL is shown in Figure 6-213 and described in Table 6-216.

Return to the Summary Table.

Figure 6-213. MSS_CR5A_RST_CTRL Register

31	30	29	28	27	26	25	24	23	22	21	20	19	18	17	16
RESERVED															
R/W-X															
15	14	13	12	11	10	9	8	7	6	5	4	3	2	1	0
RESERVED													assert		
R/W-X													R/W-0h		

Table 6-216. MSS_CR5A_RST_CTRL Register Field Descriptions

Bit	Field	Type	Reset	Description
31-3	RESERVED	R/W	X	
2-0	assert	R/W	0h	This feature is for debug purpose only. Software needs to ensure the state of the Device/IP before configuring. Write pulse bit field: writing '111' will reset CR5A only

Copyright © 2025 Texas Instruments Incorporated

6.2.3.80 MSS_CR5B_RST_CTRL Register (Offset = 13Ch) [reset = X]

MSS_CR5B_RST_CTRL is shown in Figure 6-214 and described in Table 6-217.

Return to the Summary Table.

Figure 6-214. MSS_CR5B_RST_CTRL Register

31	30	29	28	27	26	25	24	23	22	21	20	19	18	17	16
RESERVED															
R/W-X															
15	14	13	12	11	10	9	8	7	6	5	4	3	2	1	0
RESERVED													assert		
R/W-X													R/W-0h		

Table 6-217. MSS_CR5B_RST_CTRL Register Field Descriptions

Bit	Field	Type	Reset	Description
31-3	RESERVED	R/W	X	
2-0	assert	R/W	0h	This feature is for debug purpose only. Software needs to ensure the state of the Device/IP before configuring. Write pulse bit field: writing '111' will reset CR5B only.

Copyright © 2025 Texas Instruments Incorporated

6.2.3.81 MSS_VIMA_RST_CTRL Register (Offset = 140h) [reset = X]

MSS_VIMA_RST_CTRL is shown in Figure 6-215 and described in Table 6-218.

Return to the Summary Table.

Figure 6-215. MSS_VIMA_RST_CTRL Register

31	30	29	28	27	26	25	24	23	22	21	20	19	18	17	16
RESERVED															
R/W-X															
15	14	13	12	11	10	9	8	7	6	5	4	3	2	1	0
RESERVED													assert		
R/W-X													R/W-0h		

Table 6-218. MSS_VIMA_RST_CTRL Register Field Descriptions

Bit	Field	Type	Reset	Description
31-3	RESERVED	R/W	X	
2-0	assert	R/W	0h	This feature is for debug purpose only. Software needs to ensure the state of the Device/IP before configuring. Writing '111' will reset MSS_CR5A_VIM.

Copyright © 2025 Texas Instruments Incorporated

6.2.3.82 MSS_VIMB_RST_CTRL Register (Offset = 144h) [reset = X]

MSS_VIMB_RST_CTRL is shown in Figure 6-216 and described in Table 6-219.

Return to the Summary Table.

Figure 6-216. MSS_VIMB_RST_CTRL Register

31	30	29	28	27	26	25	24	23	22	21	20	19	18	17	16
RESERVED															
R/W-X															
15	14	13	12	11	10	9	8	7	6	5	4	3	2	1	0
RESERVED													assert		
R/W-X													R/W-0h		

Table 6-219. MSS_VIMB_RST_CTRL Register Field Descriptions

Bit	Field	Type	Reset	Description
31-3	RESERVED	R/W	X	
2-0	assert	R/W	0h	This feature is for debug purpose only. Software needs to ensure the state of the Device/IP before configuring. Writing '111' will reset MSS_CR5B_VIM.

Copyright © 2025 Texas Instruments Incorporated

6.2.3.83 MSS_CRC_RST_CTRL Register (Offset = 148h) [reset = X]

MSS_CRC_RST_CTRL is shown in Figure 6-217 and described in Table 6-220.

Return to the Summary Table.

Figure 6-217. MSS_CRC_RST_CTRL Register

31	30	29	28	27	26	25	24	23	22	21	20	19	18	17	16
RESERVED															
R/W-X															
15	14	13	12	11	10	9	8	7	6	5	4	3	2	1	0
RESERVED													assert		
R/W-X													R/W-0h		

Table 6-220. MSS_CRC_RST_CTRL Register Field Descriptions

Bit	Field	Type	Reset	Description
31-3	RESERVED	R/W	X	
2-0	assert	R/W	0h	This feature is for debug purpose only. Software needs to ensure the state of the Device/IP before configuring. Writing '111' will reset MCRC

Copyright © 2025 Texas Instruments Incorporated

6.2.3.84 MSS_RTIA_RST_CTRL Register (Offset = 14Ch) [reset = X]

MSS_RTIA_RST_CTRL is shown in Figure 6-218 and described in Table 6-221.

Return to the Summary Table.

Figure 6-218. MSS_RTIA_RST_CTRL Register

31	30	29	28	27	26	25	24	23	22	21	20	19	18	17	16
RESERVED															
R/W-X															
15	14	13	12	11	10	9	8	7	6	5	4	3	2	1	0
RESERVED													assert		
R/W-X													R/W-0h		

Table 6-221. MSS_RTIA_RST_CTRL Register Field Descriptions

Bit	Field	Type	Reset	Description
31-3	RESERVED	R/W	X	
2-0	assert	R/W	0h	This feature is for debug purpose only. Software needs to ensure the state of the Device/IP before configuring. Writing '111' will reset RTIA

Copyright © 2025 Texas Instruments Incorporated

6.2.3.85 MSS_RTIB_RST_CTRL Register (Offset = 150h) [reset = X]

MSS_RTIB_RST_CTRL is shown in Figure 6-219 and described in Table 6-222.

Return to the Summary Table.

Figure 6-219. MSS_RTIB_RST_CTRL Register

31	30	29	28	27	26	25	24	23	22	21	20	19	18	17	16
RESERVED															
R/W-X															
15	14	13	12	11	10	9	8	7	6	5	4	3	2	1	0
RESERVED													assert		
R/W-X													R/W-0h		

Table 6-222. MSS_RTIB_RST_CTRL Register Field Descriptions

Bit	Field	Type	Reset	Description
31-3	RESERVED	R/W	X	
2-0	assert	R/W	0h	This feature is for debug purpose only. Software needs to ensure the state of the Device/IP before configuring. Writing '111' will reset RTIB

Copyright © 2025 Texas Instruments Incorporated

6.2.3.86 MSS_RTIC_RST_CTRL Register (Offset = 154h) [reset = X]

MSS_RTIC_RST_CTRL is shown in Figure 6-220 and described in Table 6-223.

Return to the Summary Table.

Figure 6-220. MSS_RTIC_RST_CTRL Register

31	30	29	28	27	26	25	24	23	22	21	20	19	18	17	16
RESERVED															
R/W-X															
15	14	13	12	11	10	9	8	7	6	5	4	3	2	1	0
RESERVED													assert		
R/W-X													R/W-0h		

Table 6-223. MSS_RTIC_RST_CTRL Register Field Descriptions

Bit	Field	Type	Reset	Description
31-3	RESERVED	R/W	X	
2-0	assert	R/W	0h	This feature is for debug purpose only. Software needs to ensure the state of the Device/IP before configuring. Writing '111' will reset RTIC

Copyright © 2025 Texas Instruments Incorporated

6.2.3.87 MSS_WDT_RST_CTRL Register (Offset = 158h) [reset = X]

MSS_WDT_RST_CTRL is shown in Figure 6-221 and described in Table 6-224.

Return to the Summary Table.

Figure 6-221. MSS_WDT_RST_CTRL Register

31	30	29	28	27	26	25	24	23	22	21	20	19	18	17	16
RESERVED															
R/W-X															
15	14	13	12	11	10	9	8	7	6	5	4	3	2	1	0
RESERVED													assert		
R/W-X													R/W-0h		

Table 6-224. MSS_WDT_RST_CTRL Register Field Descriptions

Bit	Field	Type	Reset	Description
31-3	RESERVED	R/W	X	
2-0	assert	R/W	0h	This feature is for debug purpose only. Software needs to ensure the state of the Device/IP before configuring. Writing '111' will reset WDT

Copyright © 2025 Texas Instruments Incorporated

6.2.3.88 MSS_ESM_RST_CTRL Register (Offset = 15Ch) [reset = X]

MSS_ESM_RST_CTRL is shown in Figure 6-222 and described in Table 6-225.

Return to the Summary Table.

Figure 6-222. MSS_ESM_RST_CTRL Register

31	30	29	28	27	26	25	24	23	22	21	20	19	18	17	16
RESERVED															
R/W-X															
15	14	13	12	11	10	9	8	7	6	5	4	3	2	1	0
RESERVED													assert		
R/W-X													R/W-0h		

Table 6-225. MSS_ESM_RST_CTRL Register Field Descriptions

Bit	Field	Type	Reset	Description
31-3	RESERVED	R/W	X	
2-0	assert	R/W	0h	This feature is for debug purpose only. Software needs to ensure the state of the Device/IP before configuring. Writing '111' will reset ESM

Copyright © 2025 Texas Instruments Incorporated

6.2.3.89 MSS_DCCA_RST_CTRL Register (Offset = 160h) [reset = X]

MSS_DCCA_RST_CTRL is shown in Figure 6-223 and described in Table 6-226.

Return to the Summary Table.

Figure 6-223. MSS_DCCA_RST_CTRL Register

31	30	29	28	27	26	25	24	23	22	21	20	19	18	17	16
RESERVED															
R/W-X															
15	14	13	12	11	10	9	8	7	6	5	4	3	2	1	0
RESERVED													assert		
R/W-X													R/W-0h		

Table 6-226. MSS_DCCA_RST_CTRL Register Field Descriptions

Bit	Field	Type	Reset	Description
31-3	RESERVED	R/W	X	
2-0	assert	R/W	0h	This feature is for debug purpose only. Software needs to ensure the state of the Device/IP before configuring. Writing '111' will reset DCCA

Copyright © 2025 Texas Instruments Incorporated

6.2.3.90 MSS_DCCB_RST_CTRL Register (Offset = 164h) [reset = X]

MSS_DCCB_RST_CTRL is shown in Figure 6-224 and described in Table 6-227.

Return to the Summary Table.

Figure 6-224. MSS_DCCB_RST_CTRL Register

31	30	29	28	27	26	25	24	23	22	21	20	19	18	17	16
RESERVED															
R/W-X															
15	14	13	12	11	10	9	8	7	6	5	4	3	2	1	0
RESERVED													assert		
R/W-X													R/W-0h		

Table 6-227. MSS_DCCB_RST_CTRL Register Field Descriptions

Bit	Field	Type	Reset	Description
31-3	RESERVED	R/W	X	
2-0	assert	R/W	0h	This feature is for debug purpose only. Software needs to ensure the state of the Device/IP before configuring. Writing '111' will reset DCCB

Copyright © 2025 Texas Instruments Incorporated

6.2.3.91 MSS_DCCC_RST_CTRL Register (Offset = 168h) [reset = X]

MSS_DCCC_RST_CTRL is shown in Figure 6-225 and described in Table 6-228.

Return to the Summary Table.

Figure 6-225. MSS_DCCC_RST_CTRL Register

31	30	29	28	27	26	25	24	23	22	21	20	19	18	17	16
RESERVED															
R/W-X															
15	14	13	12	11	10	9	8	7	6	5	4	3	2	1	0
RESERVED													assert		
R/W-X													R/W-0h		

Table 6-228. MSS_DCCC_RST_CTRL Register Field Descriptions

Bit	Field	Type	Reset	Description
31-3	RESERVED	R/W	X	
2-0	assert	R/W	0h	This feature is for debug purpose only. Software needs to ensure the state of the Device/IP before configuring. Writing '111' will reset DCCC

Copyright © 2025 Texas Instruments Incorporated

6.2.3.92 MSS_DCCD_RST_CTRL Register (Offset = 16Ch) [reset = X]

MSS_DCCD_RST_CTRL is shown in Figure 6-226 and described in Table 6-229.

Return to the Summary Table.

Figure 6-226. MSS_DCCD_RST_CTRL Register

31	30	29	28	27	26	25	24	23	22	21	20	19	18	17	16
RESERVED															
R/W-X															
15	14	13	12	11	10	9	8	7	6	5	4	3	2	1	0
RESERVED													assert		
R/W-X													R/W-0h		

Table 6-229. MSS_DCCD_RST_CTRL Register Field Descriptions

Bit	Field	Type	Reset	Description
31-3	RESERVED	R/W	X	
2-0	assert	R/W	0h	This feature is for debug purpose only. Software needs to ensure the state of the Device/IP before configuring. Writing '111' will reset DCCD

Copyright © 2025 Texas Instruments Incorporated

6.2.3.93 MSS_GIO_RST_CTRL Register (Offset = 170h) [reset = X]

MSS_GIO_RST_CTRL is shown in Figure 6-227 and described in Table 6-230.

Return to the Summary Table.

Figure 6-227. MSS_GIO_RST_CTRL Register

31	30	29	28	27	26	25	24	23	22	21	20	19	18	17	16
RESERVED															
R/W-X															
15	14	13	12	11	10	9	8	7	6	5	4	3	2	1	0
RESERVED													assert		
R/W-X													R/W-0h		

Table 6-230. MSS_GIO_RST_CTRL Register Field Descriptions

Bit	Field	Type	Reset	Description
31-3	RESERVED	R/W	X	
2-0	assert	R/W	0h	This feature is for debug purpose only. Software needs to ensure the state of the Device/IP before configuring. Writing '111' will reset GIO

Copyright © 2025 Texas Instruments Incorporated

6.2.3.94 MSS_SPIA_RST_CTRL Register (Offset = 174h) [reset = X]

MSS_SPIA_RST_CTRL is shown in Figure 6-228 and described in Table 6-231.

Return to the Summary Table.

Figure 6-228. MSS_SPIA_RST_CTRL Register

31	30	29	28	27	26	25	24	23	22	21	20	19	18	17	16
RESERVED															
R/W-X															
15	14	13	12	11	10	9	8	7	6	5	4	3	2	1	0
RESERVED													assert		
R/W-X													R/W-0h		

Table 6-231. MSS_SPIA_RST_CTRL Register Field Descriptions

Bit	Field	Type	Reset	Description
31-3	RESERVED	R/W	X	
2-0	assert	R/W	0h	This feature is for debug purpose only. Software needs to ensure the state of the Device/IP before configuring. Writing '111' will reset SPIA

Copyright © 2025 Texas Instruments Incorporated

6.2.3.95 MSS_SPIB_RST_CTRL Register (Offset = 178h) [reset = X]

MSS_SPIB_RST_CTRL is shown in Figure 6-229 and described in Table 6-232.

Return to the Summary Table.

Figure 6-229. MSS_SPIB_RST_CTRL Register

31	30	29	28	27	26	25	24	23	22	21	20	19	18	17	16
RESERVED															
R/W-X															
15	14	13	12	11	10	9	8	7	6	5	4	3	2	1	0
RESERVED													assert		
R/W-X													R/W-0h		

Table 6-232. MSS_SPIB_RST_CTRL Register Field Descriptions

Bit	Field	Type	Reset	Description
31-3	RESERVED	R/W	X	
2-0	assert	R/W	0h	This feature is for debug purpose only. Software needs to ensure the state of the Device/IP before configuring. Writing '111' will reset SPIB

Copyright © 2025 Texas Instruments Incorporated

6.2.3.96 MSS_QSPI_RST_CTRL Register (Offset = 17Ch) [reset = X]

MSS_QSPI_RST_CTRL is shown in Figure 6-230 and described in Table 6-233.

Return to the Summary Table.

Figure 6-230. MSS_QSPI_RST_CTRL Register

31	30	29	28	27	26	25	24	23	22	21	20	19	18	17	16
RESERVED															
R/W-X															
15	14	13	12	11	10	9	8	7	6	5	4	3	2	1	0
RESERVED													assert		
R/W-X													R/W-0h		

Table 6-233. MSS_QSPI_RST_CTRL Register Field Descriptions

Bit	Field	Type	Reset	Description
31-3	RESERVED	R/W	X	
2-0	assert	R/W	0h	This feature is for debug purpose only. Software needs to ensure the state of the Device/IP before configuring. Writing '111' will reset QSPI

Copyright © 2025 Texas Instruments Incorporated

6.2.3.97 MSS_PWM1_RST_CTRL Register (Offset = 180h) [reset = X]

MSS_PWM1_RST_CTRL is shown in Figure 6-231 and described in Table 6-234.

Return to the Summary Table.

Figure 6-231. MSS_PWM1_RST_CTRL Register

31	30	29	28	27	26	25	24	23	22	21	20	19	18	17	16
RESERVED															
R/W-X															
15	14	13	12	11	10	9	8	7	6	5	4	3	2	1	0
RESERVED													assert		
R/W-X													R/W-0h		

Table 6-234. MSS_PWM1_RST_CTRL Register Field Descriptions

Bit	Field	Type	Reset	Description
31-3	RESERVED	R/W	X	
2-0	assert	R/W	0h	This feature is for debug purpose only. Software needs to ensure the state of the Device/IP before configuring. Writing '111' will reset EPWM1

Copyright © 2025 Texas Instruments Incorporated

6.2.3.98 MSS_PWM2_RST_CTRL Register (Offset = 184h) [reset = X]

MSS_PWM2_RST_CTRL is shown in Figure 6-232 and described in Table 6-235.

Return to the Summary Table.

Figure 6-232. MSS_PWM2_RST_CTRL Register

31	30	29	28	27	26	25	24	23	22	21	20	19	18	17	16
RESERVED															
R/W-X															
15	14	13	12	11	10	9	8	7	6	5	4	3	2	1	0
RESERVED													assert		
R/W-X													R/W-0h		

Table 6-235. MSS_PWM2_RST_CTRL Register Field Descriptions

Bit	Field	Type	Reset	Description
31-3	RESERVED	R/W	X	
2-0	assert	R/W	0h	This feature is for debug purpose only. Software needs to ensure the state of the Device/IP before configuring. Writing '111' will reset EPWM2

Copyright © 2025 Texas Instruments Incorporated

6.2.3.99 MSS_PWM3_RST_CTRL Register (Offset = 188h) [reset = X]

MSS_PWM3_RST_CTRL is shown in Figure 6-233 and described in Table 6-236.

Return to the Summary Table.

Figure 6-233. MSS_PWM3_RST_CTRL Register

31	30	29	28	27	26	25	24	23	22	21	20	19	18	17	16
RESERVED															
R/W-X															
15	14	13	12	11	10	9	8	7	6	5	4	3	2	1	0
RESERVED													assert		
R/W-X													R/W-0h		

Table 6-236. MSS_PWM3_RST_CTRL Register Field Descriptions

Bit	Field	Type	Reset	Description
31-3	RESERVED	R/W	X	
2-0	assert	R/W	0h	This feature is for debug purpose only. Software needs to ensure the state of the Device/IP before configuring. Writing '111' will reset EPWM3

Copyright © 2025 Texas Instruments Incorporated

6.2.3.100 MSS_MCANA_RST_CTRL Register (Offset = 18Ch) [reset = X]

MSS_MCANA_RST_CTRL is shown in Figure 6-234 and described in Table 6-237.

Return to the Summary Table.

Figure 6-234. MSS_MCANA_RST_CTRL Register

31	30	29	28	27	26	25	24	23	22	21	20	19	18	17	16
RESERVED															
R/W-X															
15	14	13	12	11	10	9	8	7	6	5	4	3	2	1	0
RESERVED													assert		
R/W-X													R/W-0h		

Table 6-237. MSS_MCANA_RST_CTRL Register Field Descriptions

Bit	Field	Type	Reset	Description
31-3	RESERVED	R/W	X	
2-0	assert	R/W	0h	This feature is for debug purpose only. Software needs to ensure the state of the Device/IP before configuring. Writing '111' will reset MCANA

Copyright © 2025 Texas Instruments Incorporated

6.2.3.101 MSS_MCANB_RST_CTRL Register (Offset = 190h) [reset = X]

MSS_MCANB_RST_CTRL is shown in Figure 6-235 and described in Table 6-238.

Return to the Summary Table.

Figure 6-235. MSS_MCANB_RST_CTRL Register

31	30	29	28	27	26	25	24	23	22	21	20	19	18	17	16
RESERVED															
R/W-X															
15	14	13	12	11	10	9	8	7	6	5	4	3	2	1	0
RESERVED													assert		
R/W-X													R/W-0h		

Table 6-238. MSS_MCANB_RST_CTRL Register Field Descriptions

Bit	Field	Type	Reset	Description
31-3	RESERVED	R/W	X	
2-0	assert	R/W	0h	This feature is for debug purpose only. Software needs to ensure the state of the Device/IP before configuring. Writing '111' will reset MCANB

Copyright © 2025 Texas Instruments Incorporated

6.2.3.102 MSS_I2C_RST_CTRL Register (Offset = 194h) [reset = X]

MSS_I2C_RST_CTRL is shown in Figure 6-236 and described in Table 6-239.

Return to the Summary Table.

Figure 6-236. MSS_I2C_RST_CTRL Register

31	30	29	28	27	26	25	24	23	22	21	20	19	18	17	16
RESERVED															
R/W-X															
15	14	13	12	11	10	9	8	7	6	5	4	3	2	1	0
RESERVED													assert		
R/W-X													R/W-0h		

Table 6-239. MSS_I2C_RST_CTRL Register Field Descriptions

Bit	Field	Type	Reset	Description
31-3	RESERVED	R/W	X	
2-0	assert	R/W	0h	This feature is for debug purpose only. Software needs to ensure the state of the Device/IP before configuring. Writing '111' will reset I2C

Copyright © 2025 Texas Instruments Incorporated

6.2.3.103 MSS_SCIA_RST_CTRL Register (Offset = 198h) [reset = X]

MSS_SCIA_RST_CTRL is shown in Figure 6-237 and described in Table 6-240.

Return to the Summary Table.

Figure 6-237. MSS_SCIA_RST_CTRL Register

31	30	29	28	27	26	25	24	23	22	21	20	19	18	17	16
RESERVED															
R/W-X															
15	14	13	12	11	10	9	8	7	6	5	4	3	2	1	0
RESERVED													assert		
R/W-X													R/W-0h		

Table 6-240. MSS_SCIA_RST_CTRL Register Field Descriptions

Bit	Field	Type	Reset	Description
31-3	RESERVED	R/W	X	
2-0	assert	R/W	0h	This feature is for debug purpose only. Software needs to ensure the state of the Device/IP before configuring. Writing '111' will reset SCIA

Copyright © 2025 Texas Instruments Incorporated

6.2.3.104 MSS_SCIB_RST_CTRL Register (Offset = 19Ch) [reset = X]

MSS_SCIB_RST_CTRL is shown in Figure 6-238 and described in Table 6-241.

Return to the Summary Table.

Figure 6-238. MSS_SCIB_RST_CTRL Register

31	30	29	28	27	26	25	24	23	22	21	20	19	18	17	16
RESERVED															
R/W-X															
15	14	13	12	11	10	9	8	7	6	5	4	3	2	1	0
RESERVED													assert		
R/W-X													R/W-0h		

Table 6-241. MSS_SCIB_RST_CTRL Register Field Descriptions

Bit	Field	Type	Reset	Description
31-3	RESERVED	R/W	X	
2-0	assert	R/W	0h	This feature is for debug purpose only. Software needs to ensure the state of the Device/IP before configuring. Writing '111' will reset SCIB

Copyright © 2025 Texas Instruments Incorporated

6.2.3.105 MSS_EDMA_RST_CTRL Register (Offset = 1A0h) [reset = X]

MSS_EDMA_RST_CTRL is shown in Figure 6-239 and described in Table 6-242.

Return to the Summary Table.

Figure 6-239. MSS_EDMA_RST_CTRL Register

31	30	29	28	27	26	25	24
RESERVED					tptcb0_assert		
R/W-X					R/W-0h		
23	22	21	20	19	18	17	16
RESERVED					tpccb_assert		
R/W-X					R/W-0h		
15	14	13	12	11	10	9	8
RESERVED	tptca1_assert			RESERVED	tptca0_assert		
R/W-X	R/W-0h			R/W-X	R/W-0h		
7	6	5	4	3	2	1	0
RESERVED	tpcca_assert			RESERVED	assert		
R/W-X	R/W-0h			R/W-X	R/W-0h		

Table 6-242. MSS_EDMA_RST_CTRL Register Field Descriptions

Bit	Field	Type	Reset	Description
31-27	RESERVED	R/W	X	
26-24	tptcb0_assert	R/W	0h	This feature is for debug purpose only. Software needs to ensure the state of the Device/IP before configuring. Writing '111' will reset MSS_TPTCB0
23-19	RESERVED	R/W	X	
18-16	tpccb_assert	R/W	0h	This feature is for debug purpose only. Software needs to ensure the state of the Device/IP before configuring. Writing '111' will reset MSS_TPCCB
15	RESERVED	R/W	X	
14-12	tptca1_assert	R/W	0h	This feature is for debug purpose only. Software needs to ensure the state of the Device/IP before configuring. Writing '111' will reset MSS_TPTCA1
11	RESERVED	R/W	X	
10-8	tptca0_assert	R/W	0h	This feature is for debug purpose only. Software needs to ensure the state of the Device/IP before configuring. Writing '111' will reset MSS_TPTCA0
7	RESERVED	R/W	X	
6-4	tpcca_assert	R/W	0h	This feature is for debug purpose only. Software needs to ensure the state of the Device/IP before configuring. Writing '111' will reset MSS_TPCCA
3	RESERVED	R/W	X	
2-0	assert	R/W	0h	This feature is for debug purpose only. Software needs to ensure the state of the Device/IP before configuring. Writing '111' will reset EDMA

Copyright © 2025 Texas Instruments Incorporated

6.2.3.106 MSS_INFRA_RST_CTRL Register (Offset = 1A4h) [reset = X]

MSS_INFRA_RST_CTRL is shown in Figure 6-240 and described in Table 6-243.

Return to the Summary Table.

Figure 6-240. MSS_INFRA_RST_CTRL Register

31	30	29	28	27	26	25	24	23	22	21	20	19	18	17	16
RESERVED															
R/W-X															
15	14	13	12	11	10	9	8	7	6	5	4	3	2	1	0
RESERVED													assert		
R/W-X													R/W-0h		

Table 6-243. MSS_INFRA_RST_CTRL Register Field Descriptions

Bit	Field	Type	Reset	Description
31-3	RESERVED	R/W	X	
2-0	assert	R/W	0h	This feature is for debug purpose only. Software needs to ensure the state of the Device/IP before configuring. Writing '111' will reset MSS INFRA

Copyright © 2025 Texas Instruments Incorporated

6.2.3.107 MSS_CPSW_RST_CTRL Register (Offset = 1A8h) [reset = X]

MSS_CPSW_RST_CTRL is shown in Figure 6-241 and described in Table 6-244.

Return to the Summary Table.

Figure 6-241. MSS_CPSW_RST_CTRL Register

31	30	29	28	27	26	25	24	23	22	21	20	19	18	17	16
RESERVED															
R/W-X															
15	14	13	12	11	10	9	8	7	6	5	4	3	2	1	0
RESERVED													assert		
R/W-X													R/W-0h		

Table 6-244. MSS_CPSW_RST_CTRL Register Field Descriptions

Bit	Field	Type	Reset	Description
31-3	RESERVED	R/W	X	
2-0	assert	R/W	0h	This feature is for debug purpose only. Software needs to ensure the state of the Device/IP before configuring. Writing '111' will reset MSS CPSW

Copyright © 2025 Texas Instruments Incorporated

6.2.3.108 MSS_GPADC_RST_CTRL Register (Offset = 1ACh) [reset = X]

MSS_GPADC_RST_CTRL is shown in Figure 6-242 and described in Table 6-245.

Return to the Summary Table.

Figure 6-242. MSS_GPADC_RST_CTRL Register

31	30	29	28	27	26	25	24	23	22	21	20	19	18	17	16
RESERVED															
R/W-X															
15	14	13	12	11	10	9	8	7	6	5	4	3	2	1	0
RESERVED													assert		
R/W-X													R/W-0h		

Table 6-245. MSS_GPADC_RST_CTRL Register Field Descriptions

Bit	Field	Type	Reset	Description
31-3	RESERVED	R/W	X	
2-0	assert	R/W	0h	This feature is for debug purpose only. Software needs to ensure the state of the Device/IP before configuring. Writing '111' will reset MSS GPADC

Copyright © 2025 Texas Instruments Incorporated

6.2.3.109 MSS_DMM_RST_CTRL Register (Offset = 1B0h) [reset = X]

MSS_DMM_RST_CTRL is shown in Figure 6-243 and described in Table 6-246.

Return to the Summary Table.

Figure 6-243. MSS_DMM_RST_CTRL Register

31	30	29	28	27	26	25	24	23	22	21	20	19	18	17	16
RESERVED															
R/W-X															
15	14	13	12	11	10	9	8	7	6	5	4	3	2	1	0
RESERVED													assert		
R/W-X													R/W-0h		

Table 6-246. MSS_DMM_RST_CTRL Register Field Descriptions

Bit	Field	Type	Reset	Description
31-3	RESERVED	R/W	X	
2-0	assert	R/W	0h	This feature is for debug purpose only. Software needs to ensure the state of the Device/IP before configuring. Writing '111' will reset MSS DMMA/B

Copyright © 2025 Texas Instruments Incorporated

6.2.3.110 R5_COREA_GATE Register (Offset = 1B4h) [reset = X]

R5_COREA_GATE is shown in Figure 6-244 and described in Table 6-247.

Return to the Summary Table.

Figure 6-244. R5_COREA_GATE Register

31	30	29	28	27	26	25	24	23	22	21	20	19	18	17	16
RESERVED															
R/W-X															
15	14	13	12	11	10	9	8	7	6	5	4	3	2	1	0
RESERVED													clkgate		
R/W-X													R/W-0h		

Table 6-247. R5_COREA_GATE Register Field Descriptions

Bit	Field	Type	Reset	Description
31-3	RESERVED	R/W	X	
2-0	clkgate	R/W	0h	writing '111' will gate clock to CR5A related peripherals inside Cortexr5ss

Copyright © 2025 Texas Instruments Incorporated

6.2.3.111 R5_COREB_GATE Register (Offset = 1B8h) [reset = X]

R5_COREB_GATE is shown in Figure 6-245 and described in Table 6-248.

Return to the Summary Table.

Figure 6-245. R5_COREB_GATE Register

31	30	29	28	27	26	25	24	23	22	21	20	19	18	17	16
RESERVED															
R/W-X															
15	14	13	12	11	10	9	8	7	6	5	4	3	2	1	0
RESERVED													clkgate		
R/W-X													R/W-0h		

Table 6-248. R5_COREB_GATE Register Field Descriptions

Bit	Field	Type	Reset	Description
31-3	RESERVED	R/W	X	
2-0	clkgate	R/W	0h	writing '111' will gate clock to CR5B related peripherals inside Cortexr5ss

Copyright © 2025 Texas Instruments Incorporated

6.2.3.112 MSS_L2_BANKA_PD_CTRL Register (Offset = 1BCh) [reset = X]

MSS_L2_BANKA_PD_CTRL is shown in Figure 6-246 and described in Table 6-249.

Return to the Summary Table.

Figure 6-246. MSS_L2_BANKA_PD_CTRL Register

31	30	29	28	27	26	25	24
RESERVED							
R/W-X							
23	22	21	20	19	18	17	16
RESERVED							
R/W-X							
15	14	13	12	11	10	9	8
RESERVED						agoodin	
R/W-X						R/W-7h	
7	6	5	4	3	2	1	0
RESERVED	aonin			RESERVED		iso	
R/W-X	R/W-7h			R/W-X		R/W-0h	

Table 6-249. MSS_L2_BANKA_PD_CTRL Register Field Descriptions

Bit	Field	Type	Reset	Description
31-11	RESERVED	R/W	X	
10-8	agoodin	R/W	7h	SW control for power signal 'AGOODIN' for MSS_L2_BANKA
7	RESERVED	R/W	X	
6-4	aonin	R/W	7h	SW control for power signal 'AONIN' for MSS_L2_BANKA
3	RESERVED	R/W	X	
2-0	iso	R/W	0h	SW control for power signal 'ISO' for MSS_L2_BANKA

Copyright © 2025 Texas Instruments Incorporated

6.2.3.113 MSS_L2_BANKB_PD_CTRL Register (Offset = 1C0h) [reset = X]

MSS_L2_BANKB_PD_CTRL is shown in Figure 6-247 and described in Table 6-250.

Return to the Summary Table.

Figure 6-247. MSS_L2_BANKB_PD_CTRL Register

31	30	29	28	27	26	25	24
RESERVED							
R/W-X							
23	22	21	20	19	18	17	16
RESERVED							
R/W-X							
15	14	13	12	11	10	9	8
RESERVED						agoodin	
R/W-X						R/W-7h	
7	6	5	4	3	2	1	0
RESERVED	aonin			RESERVED		iso	
R/W-X	R/W-7h			R/W-X		R/W-0h	

Table 6-250. MSS_L2_BANKB_PD_CTRL Register Field Descriptions

Bit	Field	Type	Reset	Description
31-11	RESERVED	R/W	X	
10-8	agoodin	R/W	7h	SW control for power signal 'AGOODIN' for MSS_L2_BANKB
7	RESERVED	R/W	X	
6-4	aonin	R/W	7h	SW control for power signal 'AONIN' for MSS_L2_BANKB
3	RESERVED	R/W	X	
2-0	iso	R/W	0h	SW control for power signal 'ISO' for MSS_L2_BANKB

Copyright © 2025 Texas Instruments Incorporated

6.2.3.114 MSS_L2_BANKA_PD_STATUS Register (Offset = 1C4h) [reset = X]

MSS_L2_BANKA_PD_STATUS is shown in Figure 6-248 and described in Table 6-251.

Return to the Summary Table.

Figure 6-248. MSS_L2_BANKA_PD_STATUS Register

31	30	29	28	27	26	25	24
RESERVED							
R-X							
23	22	21	20	19	18	17	16
RESERVED							
R-X							
15	14	13	12	11	10	9	8
RESERVED							
R-X							
7	6	5	4	3	2	1	0
RESERVED						agoodout	aonout
R-X						R-1h	R-1h

Table 6-251. MSS_L2_BANKA_PD_STATUS Register Field Descriptions

Bit	Field	Type	Reset	Description
31-2	RESERVED	R	X	
1	agoodout	R	1h	SW status indicating the 'pgoodin' of MSS_L2_BANKA
0	aonout	R	1h	SW status indicating the 'ponin' of MSS_L2_BANKA

Copyright © 2025 Texas Instruments Incorporated

6.2.3.115 MSS_L2_BANKB_PD_STATUS Register (Offset = 1C8h) [reset = X]

MSS_L2_BANKB_PD_STATUS is shown in Figure 6-249 and described in Table 6-252.

Return to the Summary Table.

Figure 6-249. MSS_L2_BANKB_PD_STATUS Register

31	30	29	28	27	26	25	24
RESERVED							
R-X							
23	22	21	20	19	18	17	16
RESERVED							
R-X							
15	14	13	12	11	10	9	8
RESERVED							
R-X							
7	6	5	4	3	2	1	0
RESERVED						agoodout	aonout
R-X						R-1h	R-1h

Table 6-252. MSS_L2_BANKB_PD_STATUS Register Field Descriptions

Bit	Field	Type	Reset	Description
31-2	RESERVED	R	X	
1	agoodout	R	1h	SW status indicating the 'pgoodin' of MSS_L2_BANKB
0	aonout	R	1h	SW status indicating the 'ponin' of MSS_L2_BANKB

Copyright © 2025 Texas Instruments Incorporated

6.2.3.116 HSM_RTIA_CLK_SRC_SEL Register (Offset = 400h) [reset = X]

HSM_RTIA_CLK_SRC_SEL is shown in Figure 6-250 and described in Table 6-253.

Return to the Summary Table.

Figure 6-250. HSM_RTIA_CLK_SRC_SEL Register

31	30	29	28	27	26	25	24	23	22	21	20	19	18	17	16	15	14	13	12	11	10	9	8	7	6	5	4	3	2	1	0
RESERVED																				clksrcsel											
R/W-X																				R/W-0h											

Table 6-253. HSM_RTIA_CLK_SRC_SEL Register Field Descriptions

Bit	Field	Type	Reset	Description
31-12	RESERVED	R/W	X	
11-0	clksrcsel	R/W	0h	Select line for selecting source clock for HSM_RTIA. Data should be loaded as multibit. For example: if '0x5' should be selected then '0x555' should be configured to the register.

Copyright © 2025 Texas Instruments Incorporated

6.2.3.117 HSM_WDT_CLK_SRC_SEL Register (Offset = 404h) [reset = X]

HSM_WDT_CLK_SRC_SEL is shown in Figure 6-251 and described in Table 6-254.

Return to the Summary Table.

Figure 6-251. HSM_WDT_CLK_SRC_SEL Register

31	30	29	28	27	26	25	24	23	22	21	20	19	18	17	16	15	14	13	12	11	10	9	8	7	6	5	4	3	2	1	0
RESERVED																				clksrcsel											
R/W-X																				R/W-0h											

Table 6-254. HSM_WDT_CLK_SRC_SEL Register Field Descriptions

Bit	Field	Type	Reset	Description
31-12	RESERVED	R/W	X	
11-0	clksrcsel	R/W	0h	Select line for selecting source clock for HSM_WDT. Data should be loaded as multibit. For example: if '0x5' should be selected then '0x555' should be configured to the register.

Copyright © 2025 Texas Instruments Incorporated

6.2.3.118 HSM_RTC_CLK_SRC_SEL Register (Offset = 408h) [reset = X]

HSM_RTC_CLK_SRC_SEL is shown in Figure 6-252 and described in Table 6-255.

Return to the Summary Table.

Figure 6-252. HSM_RTC_CLK_SRC_SEL Register

31	30	29	28	27	26	25	24	23	22	21	20	19	18	17	16	15	14	13	12	11	10	9	8	7	6	5	4	3	2	1	0
RESERVED																				clksrcsel											
R/W-X																				R/W-777h											

Table 6-255. HSM_RTC_CLK_SRC_SEL Register Field Descriptions

Bit	Field	Type	Reset	Description
31-12	RESERVED	R/W	X	
11-0	clksrcsel	R/W	777h	Select line for selecting source clock for HSM_RTC. Data should be loaded as multibit. For example: if '0x5' should be selected then '0x555' should be configured to the register.

Copyright © 2025 Texas Instruments Incorporated

6.2.3.119 HSM_DMTA_CLK_SRC_SEL Register (Offset = 40Ch) [reset = X]

HSM_DMTA_CLK_SRC_SEL is shown in Figure 6-253 and described in Table 6-256.

Return to the Summary Table.

Figure 6-253. HSM_DMTA_CLK_SRC_SEL Register

31	30	29	28	27	26	25	24	23	22	21	20	19	18	17	16	15	14	13	12	11	10	9	8	7	6	5	4	3	2	1	0
RESERVED																				clksrcsel											
R/W-X																				R/W-0h											

Table 6-256. HSM_DMTA_CLK_SRC_SEL Register Field Descriptions

Bit	Field	Type	Reset	Description
31-12	RESERVED	R/W	X	
11-0	clksrcsel	R/W	0h	Select line for selecting source clock for HSM_DMTA. Data should be loaded as multibit. For example: if '0x5' should be selected then '0x555' should be configured to the register.

Copyright © 2025 Texas Instruments Incorporated

6.2.3.120 HSM_DMTB_CLK_SRC_SEL Register (Offset = 410h) [reset = X]

HSM_DMTB_CLK_SRC_SEL is shown in Figure 6-254 and described in Table 6-257.

Return to the Summary Table.

Figure 6-254. HSM_DMTB_CLK_SRC_SEL Register

31	30	29	28	27	26	25	24	23	22	21	20	19	18	17	16	15	14	13	12	11	10	9	8	7	6	5	4	3	2	1	0
RESERVED																				clksrcsel											
R/W-X																				R/W-0h											

Table 6-257. HSM_DMTB_CLK_SRC_SEL Register Field Descriptions

Bit	Field	Type	Reset	Description
31-12	RESERVED	R/W	X	
11-0	clksrcsel	R/W	0h	Select line for selecting source clock for HSM_DMTB. Data should be loaded as multibit. For example: if '0x5' should be selected then '0x555' should be configured to the register.

Copyright © 2025 Texas Instruments Incorporated

6.2.3.121 HSM_RTI_CLK_DIV_VAL Register (Offset = 414h) [reset = X]

HSM_RTI_CLK_DIV_VAL is shown in Figure 6-255 and described in Table 6-258.

Return to the Summary Table.

Figure 6-255. HSM_RTI_CLK_DIV_VAL Register

31	30	29	28	27	26	25	24	23	22	21	20	19	18	17	16	15	14	13	12	11	10	9	8	7	6	5	4	3	2	1	0
RESERVED																				clkdivr											
R/W-X																				R/W-0h											

Table 6-258. HSM_RTI_CLK_DIV_VAL Register Field Descriptions

Bit	Field	Type	Reset	Description
31-12	RESERVED	R/W	X	
11-0	clkdivr	R/W	0h	Divider value HSM RTI selected clock. Data should be loaded as multibit. For example: if divider value of '0x8' should be selected then '0x888' should be configured to the register.

Copyright © 2025 Texas Instruments Incorporated

6.2.3.122 HSM_WDT_CLK_DIV_VAL Register (Offset = 418h) [reset = X]

HSM_WDT_CLK_DIV_VAL is shown in Figure 6-256 and described in Table 6-259.

Return to the Summary Table.

Figure 6-256. HSM_WDT_CLK_DIV_VAL Register

31	30	29	28	27	26	25	24	23	22	21	20	19	18	17	16	15	14	13	12	11	10	9	8	7	6	5	4	3	2	1	0
RESERVED																				clkdivr											
R/W-X																				R/W-0h											

Table 6-259. HSM_WDT_CLK_DIV_VAL Register Field Descriptions

Bit	Field	Type	Reset	Description
31-12	RESERVED	R/W	X	
11-0	clkdivr	R/W	0h	Divider value HSM WDT selected clock. Data should be loaded as multibit. For example: if divider value of '0x8' should be selected then '0x888' should be configured to the register.

Copyright © 2025 Texas Instruments Incorporated

6.2.3.123 HSM_RTC_CLK_DIV_VAL Register (Offset = 41Ch) [reset = X]

HSM_RTC_CLK_DIV_VAL is shown in Figure 6-257 and described in Table 6-260.

Return to the Summary Table.

Figure 6-257. HSM_RTC_CLK_DIV_VAL Register

31	30	29	28	27	26	25	24	23	22	21	20	19	18	17	16	15	14	13	12	11	10	9	8	7	6	5	4	3	2	1	0
RESERVED																				clkdivr											
R/W-X																				R/W-0h											

Table 6-260. HSM_RTC_CLK_DIV_VAL Register Field Descriptions

Bit	Field	Type	Reset	Description
31-12	RESERVED	R/W	X	
11-0	clkdivr	R/W	0h	Divider value HSM RTC selected clock. Data should be loaded as multibit. For example: if divider value of '0x8' should be selected then '0x888' should be configured to the register.

Copyright © 2025 Texas Instruments Incorporated

6.2.3.124 HSM_DMTA_CLK_DIV_VAL Register (Offset = 420h) [reset = X]

HSM_DMTA_CLK_DIV_VAL is shown in Figure 6-258 and described in Table 6-261.

Return to the Summary Table.

Figure 6-258. HSM_DMTA_CLK_DIV_VAL Register

31	30	29	28	27	26	25	24	23	22	21	20	19	18	17	16	15	14	13	12	11	10	9	8	7	6	5	4	3	2	1	0
RESERVED																				clkdivr											
R/W-X																				R/W-0h											

Table 6-261. HSM_DMTA_CLK_DIV_VAL Register Field Descriptions

Bit	Field	Type	Reset	Description
31-12	RESERVED	R/W	X	
11-0	clkdivr	R/W	0h	Divider value HSM DMTA selected clock. Data should be loaded as multibit. For example: if divider value of '0x8' should be selected then '0x888' should be configured to the register.

Copyright © 2025 Texas Instruments Incorporated

6.2.3.125 HSM_DMTB_CLK_DIV_VAL Register (Offset = 424h) [reset = X]

HSM_DMTB_CLK_DIV_VAL is shown in Figure 6-259 and described in Table 6-262.

Return to the Summary Table.

Figure 6-259. HSM_DMTB_CLK_DIV_VAL Register

31	30	29	28	27	26	25	24	23	22	21	20	19	18	17	16	15	14	13	12	11	10	9	8	7	6	5	4	3	2	1	0
RESERVED																				clkdivr											
R/W-X																				R/W-0h											

Table 6-262. HSM_DMTB_CLK_DIV_VAL Register Field Descriptions

Bit	Field	Type	Reset	Description
31-12	RESERVED	R/W	X	
11-0	clkdivr	R/W	0h	Divider value HSM DMTB selected clock. Data should be loaded as multibit. For example: if divider value of '0x8' should be selected then '0x888' should be configured to the register.

Copyright © 2025 Texas Instruments Incorporated

6.2.3.126 HSM_RTI_CLK_GATE Register (Offset = 428h) [reset = X]

HSM_RTI_CLK_GATE is shown in Figure 6-260 and described in Table 6-263.

Return to the Summary Table.

Figure 6-260. HSM_RTI_CLK_GATE Register

31	30	29	28	27	26	25	24	23	22	21	20	19	18	17	16
RESERVED															
R/W-X															
15	14	13	12	11	10	9	8	7	6	5	4	3	2	1	0
RESERVED													gated		
R/W-X													R/W-0h		

Table 6-263. HSM_RTI_CLK_GATE Register Field Descriptions

Bit	Field	Type	Reset	Description
31-3	RESERVED	R/W	X	
2-0	gated	R/W	0h	writing '111' will gate clock for HSM RTI

Copyright © 2025 Texas Instruments Incorporated

6.2.3.127 HSM_WDT_CLK_GATE Register (Offset = 42Ch) [reset = X]

HSM_WDT_CLK_GATE is shown in Figure 6-261 and described in Table 6-264.

Return to the Summary Table.

Figure 6-261. HSM_WDT_CLK_GATE Register

31	30	29	28	27	26	25	24	23	22	21	20	19	18	17	16
RESERVED															
R/W-X															
15	14	13	12	11	10	9	8	7	6	5	4	3	2	1	0
RESERVED													gated		
R/W-X													R/W-0h		

Table 6-264. HSM_WDT_CLK_GATE Register Field Descriptions

Bit	Field	Type	Reset	Description
31-3	RESERVED	R/W	X	
2-0	gated	R/W	0h	writing '111' will gate clock for HSM WDT

Copyright © 2025 Texas Instruments Incorporated

6.2.3.128 HSM_RTC_CLK_GATE Register (Offset = 430h) [reset = X]

HSM_RTC_CLK_GATE is shown in Figure 6-262 and described in Table 6-265.

Return to the Summary Table.

Figure 6-262. HSM_RTC_CLK_GATE Register

31	30	29	28	27	26	25	24	23	22	21	20	19	18	17	16
RESERVED															
R/W-X															
15	14	13	12	11	10	9	8	7	6	5	4	3	2	1	0
RESERVED													gated		
R/W-X													R/W-0h		

Table 6-265. HSM_RTC_CLK_GATE Register Field Descriptions

Bit	Field	Type	Reset	Description
31-3	RESERVED	R/W	X	
2-0	gated	R/W	0h	writing '111' will gate clock for HSM RTC

Copyright © 2025 Texas Instruments Incorporated

6.2.3.129 HSM_DMTA_CLK_GATE Register (Offset = 434h) [reset = X]

HSM_DMTA_CLK_GATE is shown in Figure 6-263 and described in Table 6-266.

Return to the Summary Table.

Figure 6-263. HSM_DMTA_CLK_GATE Register

31	30	29	28	27	26	25	24	23	22	21	20	19	18	17	16
RESERVED															
R/W-X															
15	14	13	12	11	10	9	8	7	6	5	4	3	2	1	0
RESERVED													gated		
R/W-X													R/W-0h		

Table 6-266. HSM_DMTA_CLK_GATE Register Field Descriptions

Bit	Field	Type	Reset	Description
31-3	RESERVED	R/W	X	
2-0	gated	R/W	0h	writing '111' will gate clock for HSM DMTA

Copyright © 2025 Texas Instruments Incorporated

6.2.3.130 HSM_DMTB_CLK_GATE Register (Offset = 438h) [reset = X]

HSM_DMTB_CLK_GATE is shown in Figure 6-264 and described in Table 6-267.

Return to the Summary Table.

Figure 6-264. HSM_DMTB_CLK_GATE Register

31	30	29	28	27	26	25	24	23	22	21	20	19	18	17	16
RESERVED															
R/W-X															
15	14	13	12	11	10	9	8	7	6	5	4	3	2	1	0
RESERVED													gated		
R/W-X													R/W-0h		

Table 6-267. HSM_DMTB_CLK_GATE Register Field Descriptions

Bit	Field	Type	Reset	Description
31-3	RESERVED	R/W	X	
2-0	gated	R/W	0h	writing '111' will gate clock for HSM DMTB

Copyright © 2025 Texas Instruments Incorporated

6.2.3.131 HSM_RTI_CLK_STATUS Register (Offset = 43Ch) [reset = X]

HSM_RTI_CLK_STATUS is shown in Figure 6-265 and described in Table 6-268.

Return to the Summary Table.

Figure 6-265. HSM_RTI_CLK_STATUS Register

31	30	29	28	27	26	25	24	23	22	21	20	19	18	17	16
RESERVED															
R-X															
15	14	13	12	11	10	9	8	7	6	5	4	3	2	1	0
currdivider								clkinuse							
R-0h								R-1h							

Table 6-268. HSM_RTI_CLK_STATUS Register Field Descriptions

Bit	Field	Type	Reset	Description
31-16	RESERVED	R	X	
15-8	currdivider	R	0h	Status shows the current divider value chosen for HSM_RTI
7-0	clkinuse	R	1h	Status shows the source clock selected for HSM_RTI

Copyright © 2025 Texas Instruments Incorporated

6.2.3.132 HSM_WDT_CLK_STATUS Register (Offset = 440h) [reset = X]

HSM_WDT_CLK_STATUS is shown in Figure 6-266 and described in Table 6-269.

Return to the Summary Table.

Figure 6-266. HSM_WDT_CLK_STATUS Register

31	30	29	28	27	26	25	24	23	22	21	20	19	18	17	16
RESERVED															
R-X															
15	14	13	12	11	10	9	8	7	6	5	4	3	2	1	0
currdivider								clkinuse							
R-0h								R-1h							

Table 6-269. HSM_WDT_CLK_STATUS Register Field Descriptions

Bit	Field	Type	Reset	Description
31-16	RESERVED	R	X	
15-8	currdivider	R	0h	Status shows the current divider value chosen for HSM_WDT
7-0	clkinuse	R	1h	Status shows the source clock selected for HSM_WDT

Copyright © 2025 Texas Instruments Incorporated

6.2.3.133 HSM_RTC_CLK_STATUS Register (Offset = 444h) [reset = X]

HSM_RTC_CLK_STATUS is shown in Figure 6-267 and described in Table 6-270.

Return to the Summary Table.

Figure 6-267. HSM_RTC_CLK_STATUS Register

31	30	29	28	27	26	25	24	23	22	21	20	19	18	17	16
RESERVED															
R-X															
15	14	13	12	11	10	9	8	7	6	5	4	3	2	1	0
currdivider								clkinuse							
R-0h								R-1h							

Table 6-270. HSM_RTC_CLK_STATUS Register Field Descriptions

Bit	Field	Type	Reset	Description
31-16	RESERVED	R	X	
15-8	currdivider	R	0h	Status shows the current divider value chosen for HSM_RTC
7-0	clkinuse	R	1h	Status shows the source clock selected for HSM_RTC

Copyright © 2025 Texas Instruments Incorporated

6.2.3.134 HSM_DMTA_CLK_STATUS Register (Offset = 448h) [reset = X]

HSM_DMTA_CLK_STATUS is shown in Figure 6-268 and described in Table 6-271.

Return to the Summary Table.

Figure 6-268. HSM_DMTA_CLK_STATUS Register

31	30	29	28	27	26	25	24	23	22	21	20	19	18	17	16
RESERVED															
R-X															
15	14	13	12	11	10	9	8	7	6	5	4	3	2	1	0
currdivider								clkinuse							
R-0h								R-1h							

Table 6-271. HSM_DMTA_CLK_STATUS Register Field Descriptions

Bit	Field	Type	Reset	Description
31-16	RESERVED	R	X	
15-8	currdivider	R	0h	Status shows the current divider value chosen for HSM_DMTA
7-0	clkinuse	R	1h	Status shows the source clock selected for HSM_DMTA

Copyright © 2025 Texas Instruments Incorporated

6.2.3.135 HSM_DMTB_CLK_STATUS Register (Offset = 44Ch) [reset = X]

HSM_DMTB_CLK_STATUS is shown in Figure 6-269 and described in Table 6-272.

Return to the Summary Table.

Figure 6-269. HSM_DMTB_CLK_STATUS Register

31	30	29	28	27	26	25	24	23	22	21	20	19	18	17	16
RESERVED															
R-X															
15	14	13	12	11	10	9	8	7	6	5	4	3	2	1	0
currdivider								clkinuse							
R-0h								R-1h							

Table 6-272. HSM_DMTB_CLK_STATUS Register Field Descriptions

Bit	Field	Type	Reset	Description
31-16	RESERVED	R	X	
15-8	currdivider	R	0h	Status shows the current divider value chosen for HSM_DMTB
7-0	clkinuse	R	1h	Status shows the source clock selected for HSM_DMTB

Copyright © 2025 Texas Instruments Incorporated

6.2.3.136 HW_SPARE_RW0 Register (Offset = FD0h) [reset = 0h]

HW_SPARE_RW0 is shown in Figure 6-270 and described in Table 6-273.

Return to the Summary Table.

Figure 6-270. HW_SPARE_RW0 Register

31	30	29	28	27	26	25	24	23	22	21	20	19	18	17	16	15	14	13	12	11	10	9	8	7	6	5	4	3	2	1	0
hw_spare_rw0																															
R/W-0h																															

Table 6-273. HW_SPARE_RW0 Register Field Descriptions

Bit	Field	Type	Reset	Description
31-0	hw_spare_rw0	R/W	0h	Reserved for HW R&D

Copyright © 2025 Texas Instruments Incorporated

6.2.3.137 HW_SPARE_RW1 Register (Offset = FD4h) [reset = 0h]

HW_SPARE_RW1 is shown in Figure 6-271 and described in Table 6-274.

Return to the Summary Table.

Figure 6-271. HW_SPARE_RW1 Register

31	30	29	28	27	26	25	24	23	22	21	20	19	18	17	16	15	14	13	12	11	10	9	8	7	6	5	4	3	2	1	0
hw_spare_rw1																															
R/W-0h																															

Table 6-274. HW_SPARE_RW1 Register Field Descriptions

Bit	Field	Type	Reset	Description
31-0	hw_spare_rw1	R/W	0h	Reserved for HW R&D

Copyright © 2025 Texas Instruments Incorporated

6.2.3.138 HW_SPARE_RW2 Register (Offset = FD8h) [reset = 0h]

HW_SPARE_RW2 is shown in Figure 6-272 and described in Table 6-275.

Return to the Summary Table.

Figure 6-272. HW_SPARE_RW2 Register

31	30	29	28	27	26	25	24	23	22	21	20	19	18	17	16	15	14	13	12	11	10	9	8	7	6	5	4	3	2	1	0
hw_spare_rw2																															
R/W-0h																															

Table 6-275. HW_SPARE_RW2 Register Field Descriptions

Bit	Field	Type	Reset	Description
31-0	hw_spare_rw2	R/W	0h	Reserved for HW R&D

Copyright © 2025 Texas Instruments Incorporated

6.2.3.139 HW_SPARE_RW3 Register (Offset = FDCh) [reset = 0h]

HW_SPARE_RW3 is shown in Figure 6-273 and described in Table 6-276.

Return to the Summary Table.

Figure 6-273. HW_SPARE_RW3 Register

31	30	29	28	27	26	25	24	23	22	21	20	19	18	17	16	15	14	13	12	11	10	9	8	7	6	5	4	3	2	1	0
hw_spare_rw3																															
R/W-0h																															

Table 6-276. HW_SPARE_RW3 Register Field Descriptions

Bit	Field	Type	Reset	Description
31-0	hw_spare_rw3	R/W	0h	Reserved for HW R&D

Copyright © 2025 Texas Instruments Incorporated

6.2.3.140 HW_SPARE_RO0 Register (Offset = FE0h) [reset = 0h]

HW_SPARE_RO0 is shown in Figure 6-274 and described in Table 6-277.

Return to the Summary Table.

Figure 6-274. HW_SPARE_RO0 Register

31	30	29	28	27	26	25	24	23	22	21	20	19	18	17	16	15	14	13	12	11	10	9	8	7	6	5	4	3	2	1	0
hw_spare_ro0																															
R-0h																															

Table 6-277. HW_SPARE_RO0 Register Field Descriptions

Bit	Field	Type	Reset	Description
31-0	hw_spare_ro0	R	0h	Reserved for HW R&D

Copyright © 2025 Texas Instruments Incorporated

6.2.3.141 HW_SPARE_RO1 Register (Offset = FE4h) [reset = 0h]

HW_SPARE_RO1 is shown in Figure 6-275 and described in Table 6-278.

Return to the Summary Table.

Figure 6-275. HW_SPARE_RO1 Register

31	30	29	28	27	26	25	24	23	22	21	20	19	18	17	16	15	14	13	12	11	10	9	8	7	6	5	4	3	2	1	0
hw_spare_ro1																															
R-0h																															

Table 6-278. HW_SPARE_RO1 Register Field Descriptions

Bit	Field	Type	Reset	Description
31-0	hw_spare_ro1	R	0h	Reserved for HW R&D

Copyright © 2025 Texas Instruments Incorporated

6.2.3.142 HW_SPARE_RO2 Register (Offset = FE8h) [reset = 0h]

HW_SPARE_RO2 is shown in Figure 6-276 and described in Table 6-279.

Return to the Summary Table.

Figure 6-276. HW_SPARE_RO2 Register

31	30	29	28	27	26	25	24	23	22	21	20	19	18	17	16	15	14	13	12	11	10	9	8	7	6	5	4	3	2	1	0
hw_spare_ro2																															
R-0h																															

Table 6-279. HW_SPARE_RO2 Register Field Descriptions

Bit	Field	Type	Reset	Description
31-0	hw_spare_ro2	R	0h	Reserved for HW R&D

Copyright © 2025 Texas Instruments Incorporated

6.2.3.143 HW_SPARE_RO3 Register (Offset = FECh) [reset = 0h]

HW_SPARE_RO3 is shown in Figure 6-277 and described in Table 6-280.

Return to the Summary Table.

Figure 6-277. HW_SPARE_RO3 Register

31	30	29	28	27	26	25	24	23	22	21	20	19	18	17	16	15	14	13	12	11	10	9	8	7	6	5	4	3	2	1	0
hw_spare_ro3																															
R-0h																															

Table 6-280. HW_SPARE_RO3 Register Field Descriptions

Bit	Field	Type	Reset	Description
31-0	hw_spare_ro3	R	0h	Reserved for HW R&D

Copyright © 2025 Texas Instruments Incorporated

6.2.3.144 HW_SPARE_WPH Register (Offset = FF0h) [reset = 0h]

HW_SPARE_WPH is shown in Figure 6-278 and described in Table 6-281.

Return to the Summary Table.

Figure 6-278. HW_SPARE_WPH Register

31	30	29	28	27	26	25	24	23	22	21	20	19	18	17	16	15	14	13	12	11	10	9	8	7	6	5	4	3	2	1	0
hw_spare_wph																															
R/W-0h																															

Table 6-281. HW_SPARE_WPH Register Field Descriptions

Bit	Field	Type	Reset	Description
31-0	hw_spare_wph	R/W	0h	Reserved for HW R&D

Copyright © 2025 Texas Instruments Incorporated

6.2.3.145 HW_SPARE_REC Register (Offset = FF4h) [reset = 0h]

HW_SPARE_REC is shown in Figure 6-279 and described in Table 6-282.

Return to the Summary Table.

Figure 6-279. HW_SPARE_REC Register

31	30	29	28	27	26	25	24
hw_spare_rec31	hw_spare_rec30	hw_spare_rec29	hw_spare_rec28	hw_spare_rec27	hw_spare_rec26	hw_spare_rec25	hw_spare_rec24
R/W-0h	R/W-0h	R/W-0h	R/W-0h	R/W-0h	R/W-0h	R/W-0h	R/W-0h
23	22	21	20	19	18	17	16
hw_spare_rec23	hw_spare_rec22	hw_spare_rec21	hw_spare_rec20	hw_spare_rec19	hw_spare_rec18	hw_spare_rec17	hw_spare_rec16
R/W-0h	R/W-0h	R/W-0h	R/W-0h	R/W-0h	R/W-0h	R/W-0h	R/W-0h
15	14	13	12	11	10	9	8
hw_spare_rec15	hw_spare_rec14	hw_spare_rec13	hw_spare_rec12	hw_spare_rec11	hw_spare_rec10	hw_spare_rec9	hw_spare_rec8
R/W-0h	R/W-0h	R/W-0h	R/W-0h	R/W-0h	R/W-0h	R/W-0h	R/W-0h
7	6	5	4	3	2	1	0
hw_spare_rec7	hw_spare_rec6	hw_spare_rec5	hw_spare_rec4	hw_spare_rec3	hw_spare_rec2	hw_spare_rec1	hw_spare_rec0
R/W-0h	R/W-0h	R/W-0h	R/W-0h	R/W-0h	R/W-0h	R/W-0h	R/W-0h

Table 6-282. HW_SPARE_REC Register Field Descriptions

Bit	Field	Type	Reset	Description
31	hw_spare_rec31	R/W	0h	Reserved for HW R&D
30	hw_spare_rec30	R/W	0h	Reserved for HW R&D
29	hw_spare_rec29	R/W	0h	Reserved for HW R&D
28	hw_spare_rec28	R/W	0h	Reserved for HW R&D
27	hw_spare_rec27	R/W	0h	Reserved for HW R&D
26	hw_spare_rec26	R/W	0h	Reserved for HW R&D
25	hw_spare_rec25	R/W	0h	Reserved for HW R&D
24	hw_spare_rec24	R/W	0h	Reserved for HW R&D
23	hw_spare_rec23	R/W	0h	Reserved for HW R&D
22	hw_spare_rec22	R/W	0h	Reserved for HW R&D
21	hw_spare_rec21	R/W	0h	Reserved for HW R&D
20	hw_spare_rec20	R/W	0h	Reserved for HW R&D
19	hw_spare_rec19	R/W	0h	Reserved for HW R&D
18	hw_spare_rec18	R/W	0h	Reserved for HW R&D
17	hw_spare_rec17	R/W	0h	Reserved for HW R&D
16	hw_spare_rec16	R/W	0h	Reserved for HW R&D
15	hw_spare_rec15	R/W	0h	Reserved for HW R&D
14	hw_spare_rec14	R/W	0h	Reserved for HW R&D
13	hw_spare_rec13	R/W	0h	Reserved for HW R&D
12	hw_spare_rec12	R/W	0h	Reserved for HW R&D
11	hw_spare_rec11	R/W	0h	Reserved for HW R&D

Copyright © 2025 Texas Instruments Incorporated

Table 6-282. HW_SPARE_REC Register Field Descriptions (continued)

Bit	Field	Type	Reset	Description
10	hw_spare_rec10	R/W	0h	Reserved for HW R&D
9	hw_spare_rec9	R/W	0h	Reserved for HW R&D
8	hw_spare_rec8	R/W	0h	Reserved for HW R&D
7	hw_spare_rec7	R/W	0h	Reserved for HW R&D
6	hw_spare_rec6	R/W	0h	Reserved for HW R&D
5	hw_spare_rec5	R/W	0h	Reserved for HW R&D
4	hw_spare_rec4	R/W	0h	Reserved for HW R&D
3	hw_spare_rec3	R/W	0h	Reserved for HW R&D
2	hw_spare_rec2	R/W	0h	Reserved for HW R&D
1	hw_spare_rec1	R/W	0h	Reserved for HW R&D
0	hw_spare_rec0	R/W	0h	Reserved for HW R&D

Copyright © 2025 Texas Instruments Incorporated

6.2.3.146 LOCK0_KICK0 Register (Offset = 1008h) [reset = 0h]

LOCK0_KICK0 is shown in Figure 6-280 and described in Table 6-283.

Return to the Summary Table.

- KICK0 component

Figure 6-280. LOCK0_KICK0 Register

31	30	29	28	27	26	25	24	23	22	21	20	19	18	17	16	15	14	13	12	11	10	9	8	7	6	5	4	3	2	1	0
LOCK0_kick0																															
R/W-0h																															

Table 6-283. LOCK0_KICK0 Register Field Descriptions

Bit	Field	Type	Reset	Description
31-0	LOCK0_kick0	R/W	0h	- KICK0 component

Copyright © 2025 Texas Instruments Incorporated

6.2.3.147 LOCK0_KICK1 Register (Offset = 100Ch) [reset = 0h]

LOCK0_KICK1 is shown in Figure 6-281 and described in Table 6-284.

Return to the Summary Table.

- KICK1 component

Figure 6-281. LOCK0_KICK1 Register

31	30	29	28	27	26	25	24	23	22	21	20	19	18	17	16	15	14	13	12	11	10	9	8	7	6	5	4	3	2	1	0
LOCK0_kick1																															
R/W-0h																															

Table 6-284. LOCK0_KICK1 Register Field Descriptions

Bit	Field	Type	Reset	Description
31-0	LOCK0_kick1	R/W	0h	- KICK1 component

Copyright © 2025 Texas Instruments Incorporated

6.2.3.148 intr_raw_status Register (Offset = 1010h) [reset = X]

intr_raw_status is shown in Figure 6-282 and described in Table 6-285.

Return to the Summary Table.

Interrupt Raw Status/Set Register

Figure 6-282. intr_raw_status Register

31	30	29	28	27	26	25	24
RESERVED							
R/W-X							
23	22	21	20	19	18	17	16
RESERVED							
R/W-X							
15	14	13	12	11	10	9	8
RESERVED							
R/W-X							
7	6	5	4	3	2	1	0
RESERVED				proxy_err	kick_err	addr_err	prot_err
R/W-X				R/W1S-0h	R/W1S-0h	R/W1S-0h	R/W1S-0h

Table 6-285. intr_raw_status Register Field Descriptions

Bit	Field	Type	Reset	Description
31-4	RESERVED	R/W	X	
3	proxy_err	R/W1S	0h	Proxy0 access violation error. Raw status is read. Write a 1 to set the status. Writing a 0 has no effect.
2	kick_err	R/W1S	0h	Kick access violation error. Raw status is read. Write a 1 to set the status. Writing a 0 has no effect.
1	addr_err	R/W1S	0h	Addressing violation error. Raw status is read. Write a 1 to set the status. Writing a 0 has no effect.
0	prot_err	R/W1S	0h	Protection violation error. Raw status is read. Write a 1 to set the status. Writing a 0 has no effect.

Copyright © 2025 Texas Instruments Incorporated

6.2.3.149 intr_enabled_status_clear Register (Offset = 1014h) [reset = X]

intr_enabled_status_clear is shown in Figure 6-283 and described in Table 6-286.

Return to the Summary Table.

Interrupt Enabled Status/Clear register

Figure 6-283. intr_enabled_status_clear Register

31	30	29	28	27	26	25	24
RESERVED							
R/W-X							
23	22	21	20	19	18	17	16
RESERVED							
R/W-X							
15	14	13	12	11	10	9	8
RESERVED							
R/W-X							
7	6	5	4	3	2	1	0
RESERVED				enabled_proxy_err	enabled_kick_err	enabled_addr_err	enabled_prot_err
R/W-X				R/W1C-0h	R/W1C-0h	R/W1C-0h	R/W1C-0h

Table 6-286. intr_enabled_status_clear Register Field Descriptions

Bit	Field	Type	Reset	Description
31-4	RESERVED	R/W	X	
3	enabled_proxy_err	R/W1C	0h	Proxy0 access violation error. Enabled status is read. Write a 1 to clear the status. Writing a 0 has no effect.
2	enabled_kick_err	R/W1C	0h	Kick access violation error. Enabled status is read. Write a 1 to clear the status. Writing a 0 has no effect.
1	enabled_addr_err	R/W1C	0h	Addressing violation error. Enabled status is read. Write a 1 to clear the status. Writing a 0 has no effect.
0	enabled_prot_err	R/W1C	0h	Protection violation error. Enabled status is read. Write a 1 to clear the status. Writing a 0 has no effect.

Copyright © 2025 Texas Instruments Incorporated

6.2.3.150 intr_enable Register (Offset = 1018h) [reset = X]

intr_enable is shown in Figure 6-284 and described in Table 6-287.

Return to the Summary Table.

Interrupt Enable register

Figure 6-284. intr_enable Register

31	30	29	28	27	26	25	24
RESERVED							
R/W-X							
23	22	21	20	19	18	17	16
RESERVED							
R/W-X							
15	14	13	12	11	10	9	8
RESERVED							
R/W-X							
7	6	5	4	3	2	1	0
RESERVED				proxy_err_en	kick_err_en	addr_err_en	prot_err_en
R/W-X				R/W1S-0h	R/W1S-0h	R/W1S-0h	R/W1S-0h

Table 6-287. intr_enable Register Field Descriptions

Bit	Field	Type	Reset	Description
31-4	RESERVED	R/W	X	
3	proxy_err_en	R/W1S	0h	Proxy0 access violation error enable. Write a 1 to set the enable. Writing a 0 has no effect.
2	kick_err_en	R/W1S	0h	Kick access violation error enable. Write a 1 to set the enable. Writing a 0 has no effect.
1	addr_err_en	R/W1S	0h	Addressing violation error enable. Write a 1 to set the enable. Writing a 0 has no effect.
0	prot_err_en	R/W1S	0h	Protection violation error enable. Write a 1 to set the enable. Writing a 0 has no effect.

Copyright © 2025 Texas Instruments Incorporated

6.2.3.151 intr_enable_clear Register (Offset = 101Ch) [reset = X]

intr_enable_clear is shown in Figure 6-285 and described in Table 6-288.

Return to the Summary Table.

Interrupt Enable Clear register

Figure 6-285. intr_enable_clear Register

31	30	29	28	27	26	25	24
RESERVED							
R/W-X							
23	22	21	20	19	18	17	16
RESERVED							
R/W-X							
15	14	13	12	11	10	9	8
RESERVED							
R/W-X							
7	6	5	4	3	2	1	0
RESERVED				proxy_err_en_clr	kick_err_en_clr	addr_err_en_clr	prot_err_en_clr
R/W-X				R/W1C-0h	R/W1C-0h	R/W1C-0h	R/W1C-0h

Table 6-288. intr_enable_clear Register Field Descriptions

Bit	Field	Type	Reset	Description
31-4	RESERVED	R/W	X	
3	proxy_err_en_clr	R/W1C	0h	Proxy0 access violation error enable clear. Write a 1 to clear the enable. Writing a 0 has no effect.
2	kick_err_en_clr	R/W1C	0h	Kick access violation error enable clear. Write a 1 to clear the enable. Writing a 0 has no effect.
1	addr_err_en_clr	R/W1C	0h	Addressing violation error enable clear. Write a 1 to clear the enable. Writing a 0 has no effect.
0	prot_err_en_clr	R/W1C	0h	Protection violation error enable clear. Write a 1 to clear the enable. Writing a 0 has no effect.

Copyright © 2025 Texas Instruments Incorporated

6.2.3.152 eoi Register (Offset = 1020h) [reset = X]

eoi is shown in Figure 6-286 and described in Table 6-289.

Return to the Summary Table.

EOI register

Figure 6-286. eoi Register

31	30	29	28	27	26	25	24	23	22	21	20	19	18	17	16
RESERVED															
R/W-X															
15	14	13	12	11	10	9	8	7	6	5	4	3	2	1	0
RESERVED								eoi_vector							
R/W-X								R/W-0h							

Table 6-289. eoi Register Field Descriptions

Bit	Field	Type	Reset	Description
31-8	RESERVED	R/W	X	
7-0	eoi_vector	R/W	0h	EOI vector value. Write this with interrupt distribution value in the chip.

Copyright © 2025 Texas Instruments Incorporated

6.2.3.153 fault_address Register (Offset = 1024h) [reset = 0h]

fault_address is shown in Figure 6-287 and described in Table 6-290.

Return to the Summary Table.

Fault Address register

Figure 6-287. fault_address Register

31	30	29	28	27	26	25	24	23	22	21	20	19	18	17	16	15	14	13	12	11	10	9	8	7	6	5	4	3	2	1	0
fault_addr																															
R-0h																															

Table 6-290. fault_address Register Field Descriptions

Bit	Field	Type	Reset	Description
31-0	fault_addr	R	0h	Fault Address.

Copyright © 2025 Texas Instruments Incorporated

6.2.3.154 fault_type_status Register (Offset = 1028h) [reset = X]

fault_type_status is shown in Figure 6-288 and described in Table 6-291.

Return to the Summary Table.

Fault Type Status register

Figure 6-288. fault_type_status Register

31	30	29	28	27	26	25	24
RESERVED							
R-X							
23	22	21	20	19	18	17	16
RESERVED							
R-X							
15	14	13	12	11	10	9	8
RESERVED							
R-X							
7	6	5	4	3	2	1	0
RESERVED	fault_ns	fault_type					
R-X	R-0h	R-0h					

Table 6-291. fault_type_status Register Field Descriptions

Bit	Field	Type	Reset	Description
31-7	RESERVED	R	X	
6	fault_ns	R	0h	Non-secure access.
5-0	fault_type	R	0h	Fault Type 10_0000 = Supervisor read fault - priv = 1 dir = 1 dtype ! = 1 01_0000 = Supervisor write fault - priv = 1 dir = 0 00_1000 = Supervisor execute fault - priv = 1 dir = 1 dtype = 1 00_0100 = User read fault - priv = 0 dir = 1 dtype = 1 00_0010 = User write fault - priv = 0 dir = 0 00_0001 = User execute fault - priv = 0 dir = 1 dtype = 1 00_0000 = No fault

Copyright © 2025 Texas Instruments Incorporated

6.2.3.155 fault_attr_status Register (Offset = 102Ch) [reset = 0h]

fault_attr_status is shown in Figure 6-289 and described in Table 6-292.

Return to the Summary Table.

Fault Attribute Status register

Figure 6-289. fault_attr_status Register

31	30	29	28	27	26	25	24	23	22	21	20	19	18	17	16
fault_xid												fault_routeid			
R-0h												R-0h			
15	14	13	12	11	10	9	8	7	6	5	4	3	2	1	0
fault_routeid								fault_privid							
R-0h								R-0h							

Table 6-292. fault_attr_status Register Field Descriptions

Bit	Field	Type	Reset	Description
31-20	fault_xid	R	0h	XID.
19-8	fault_routeid	R	0h	Route ID.
7-0	fault_privid	R	0h	Privilege ID.

Copyright © 2025 Texas Instruments Incorporated

6.2.3.156 fault_clear Register (Offset = 1030h) [reset = X]

fault_clear is shown in Figure 6-290 and described in Table 6-293.

Return to the Summary Table.

Fault Clear register

Figure 6-290. fault_clear Register

31	30	29	28	27	26	25	24
RESERVED							
W-X							
23	22	21	20	19	18	17	16
RESERVED							
W-X							
15	14	13	12	11	10	9	8
RESERVED							
W-X							
7	6	5	4	3	2	1	0
RESERVED							fault_clr
W-X							W-0h

Table 6-293. fault_clear Register Field Descriptions

Bit	Field	Type	Reset	Description
31-1	RESERVED	W	X	
0	fault_clr	W	0h	Fault clear. Writing a 1 clears the current fault. Writing a 0 has no effect.

Copyright © 2025 Texas Instruments Incorporated

6.2.4 DSS_RCM Registers

Table 6-294 lists the DSS_RCM registers. All register offset addresses not listed in Table 6-294 should be considered as reserved locations and the register contents should not be modified.

Table 6-294. DSS_RCM Registers

Offset	Acronym	Register Name	Section
0h	PID	PID register	Section 7.2.4.1
14h	DSP_PD_CTRL		Section 7.2.4.2
18h	DSP_PD_TRIGGER_WAKUP		Section 7.2.4.3
1Ch	DSP_PD_TRIGGER_SLEEP		Section 7.2.4.4
20h	DSP_PD_STATUS		Section 7.2.4.5
24h	DSP_PD_CTRL_MISC0		Section 7.2.4.6
28h	DSP_PD_CTRL_MISC1		Section 7.2.4.7
2Ch	DSP_PD_STATUS_MISC0		Section 7.2.4.8
30h	DSP_PD_WAKEUP_MASK0		Section 7.2.4.9
34h	DSP_PD_WAKEUP_MASK1		Section 7.2.4.10
38h	DSP_PD_WAKEUP_MASK2		Section 7.2.4.11
3Ch	DSP_PD_WAKEUP_STATUS0		Section 7.2.4.12
40h	DSP_PD_WAKEUP_STATUS1		Section 7.2.4.13
44h	DSP_PD_WAKEUP_STATUS2		Section 7.2.4.14
48h	DSP_PD_WAKEUP_STATUS0_CLR		Section 7.2.4.15
4Ch	DSP_PD_WAKEUP_STATUS1_CLR		Section 7.2.4.16
50h	DSP_PD_WAKEUP_STATUS2_CLR		Section 7.2.4.17
54h	DSP_PD_MISSED_EVENT_MASK0		Section 7.2.4.18
58h	DSP_PD_MISSED_EVENT_MASK1		Section 7.2.4.19
5Ch	DSP_PD_MISSED_EVENT_MASK2		Section 7.2.4.20
60h	DSP_PD_MISSED_EVENT_STATUS0		Section 7.2.4.21
64h	DSP_PD_MISSED_EVENT_STATUS1		Section 7.2.4.22
68h	DSP_PD_MISSED_EVENT_STATUS2		Section 7.2.4.23
6Ch	DSP_RST_CAUSE		Section 7.2.4.24
70h	DSP_RST_CAUSE_CLR		Section 7.2.4.25
74h	DSP_STC_PBIST_CTRL		Section 7.2.4.26
78h	DSP_STC_PBIST_STATUS		Section 7.2.4.27
7Ch	DSP_STC_PBIST_CTRL_MISC0		Section 7.2.4.28
80h	DSP_STC_PBIST_CTRL_MISC1		Section 7.2.4.29
84h	DSP_STC_PBIST_START		Section 7.2.4.30
88h	DSP_STC_PBIST_STATUS_CLR		Section 7.2.4.31
8Ch	DSS_DSP_CLK_SRC_SEL		Section 7.2.4.32
90h	DSS_HWA_CLK_SRC_SEL		Section 7.2.4.33
94h	DSS_RTIA_CLK_SRC_SEL		Section 7.2.4.34
98h	DSS_RTIB_CLK_SRC_SEL		Section 7.2.4.35
9Ch	DSS_WDT_CLK_SRC_SEL		Section 7.2.4.36
A0h	DSS_SCIA_CLK_SRC_SEL		Section 7.2.4.37
A4h	DSS_DSP_CLK_DIV_VAL		Section 7.2.4.38
A8h	DSS_RTIA_CLK_DIV_VAL		Section 7.2.4.39
ACh	DSS_RTIB_CLK_DIV_VAL		Section 7.2.4.40
B0h	DSS_WDT_CLK_DIV_VAL		Section 7.2.4.41

Copyright © 2025 Texas Instruments Incorporated

Table 6-294. DSS_RCM Registers (continued)

Offset	Acronym	Register Name	Section
B4h	DSS_SCIA_CLK_DIV_VAL		Section 7.2.4.42
B8h	DSS_DSP_CLK_GATE		Section 7.2.4.43
BCh	DSS_HWA_CLK_GATE		Section 7.2.4.44
C0h	DSS_RTIA_CLK_GATE		Section 7.2.4.45
C4h	DSS_RTIB_CLK_GATE		Section 7.2.4.46
C8h	DSS_WDT_CLK_GATE		Section 7.2.4.47
CCh	DSS_SCIA_CLK_GATE		Section 7.2.4.48
D0h	DSS_CBUFF_CLK_GATE		Section 7.2.4.49
D4h	DSS_DSP_CLK_STATUS		Section 7.2.4.50
D8h	DSS_HWA_CLK_STATUS		Section 7.2.4.51
DCh	DSS_RTIA_CLK_STATUS		Section 7.2.4.52
E0h	DSS_RTIB_CLK_STATUS		Section 7.2.4.53
E4h	DSS_WDT_CLK_STATUS		Section 7.2.4.54
E8h	DSS_SCIA_CLK_STATUS		Section 7.2.4.55
ECh	DSS_DSP_RST_CTRL		Section 7.2.4.56
F0h	DSS_ESM_RST_CTRL		Section 7.2.4.57
F4h	DSS_SCIA_RST_CTRL		Section 7.2.4.58
F8h	DSS_RTIA_RST_CTRL		Section 7.2.4.59
FCh	DSS_RTIB_RST_CTRL		Section 7.2.4.60
100h	DSS_WDT_RST_CTRL		Section 7.2.4.61
104h	DSS_DCCA_RST_CTRL		Section 7.2.4.62
108h	DSS_DCCB_RST_CTRL		Section 7.2.4.63
10Ch	DSS_MCRC_RST_CTRL		Section 7.2.4.64
110h	DSP_DFT_DIV_CTRL		Section 7.2.4.65
114h	DSS_DSP_L2_PD_CTRL		Section 7.2.4.66
118h	DSS_L3_BANKA0_PD_CTRL		Section 7.2.4.67
11Ch	DSS_L3_BANKA1_PD_CTRL		Section 7.2.4.68
120h	DSS_L3_BANKA2_PD_CTRL		Section 7.2.4.69
124h	DSS_L3_BANKA3_PD_CTRL		Section 7.2.4.70
128h	DSS_L3_BANKB0_PD_CTRL		Section 7.2.4.71
12Ch	DSS_L3_BANKB1_PD_CTRL		Section 7.2.4.72
130h	DSS_L3_BANKB2_PD_CTRL		Section 7.2.4.73
134h	DSS_L3_BANKB3_PD_CTRL		Section 7.2.4.74
138h	DSS_L3_BANKC0_PD_CTRL		Section 7.2.4.75
13Ch	DSS_L3_BANKC1_PD_CTRL		Section 7.2.4.76
140h	DSS_L3_BANKC2_PD_CTRL		Section 7.2.4.77
144h	DSS_L3_BANKC3_PD_CTRL		Section 7.2.4.78
148h	DSS_L3_BANKD0_PD_CTRL		Section 7.2.4.79
14Ch	DSS_L3_BANKD1_PD_CTRL		Section 7.2.4.80
150h	DSS_L3_BANKD2_PD_CTRL		Section 7.2.4.81
158h	DSS_HWA_PD_CTRL		Section 7.2.4.82
15Ch	DSS_DSP_L2_PD_STATUS		Section 7.2.4.83
160h	DSS_L3_BANKA0_PD_STATUS		Section 7.2.4.84
164h	DSS_L3_BANKA1_PD_STATUS		Section 7.2.4.85
168h	DSS_L3_BANKA2_PD_STATUS		Section 7.2.4.86

Copyright © 2025 Texas Instruments Incorporated

Table 6-294. DSS_RCM Registers (continued)

Offset	Acronym	Register Name	Section
16Ch	DSS_L3_BANKA3_PD_STATUS		Section 7.2.4.87
170h	DSS_L3_BANKB0_PD_STATUS		Section 7.2.4.88
174h	DSS_L3_BANKB1_PD_STATUS		Section 7.2.4.89
178h	DSS_L3_BANKB2_PD_STATUS		Section 7.2.4.90
17Ch	DSS_L3_BANKB3_PD_STATUS		Section 7.2.4.91
180h	DSS_L3_BANKC0_PD_STATUS		Section 7.2.4.92
184h	DSS_L3_BANKC1_PD_STATUS		Section 7.2.4.93
188h	DSS_L3_BANKC2_PD_STATUS		Section 7.2.4.94
18Ch	DSS_L3_BANKC3_PD_STATUS		Section 7.2.4.95
190h	DSS_L3_BANKD0_PD_STATUS		Section 7.2.4.96
194h	DSS_L3_BANKD1_PD_STATUS		Section 7.2.4.97
198h	DSS_L3_BANKD2_PD_STATUS		Section 7.2.4.98
1A0h	DSS_HWA_PD_STATUS		Section 7.2.4.99
1A4h	DSS_DSP_TRCCLK_DIVRATIO		Section 7.2.4.100
1A8h	DSS_DSP_TCLK_DIVRATIO		Section 7.2.4.101
1ACh	DSS_DSP_DITHERED_CLK_CTRL		Section 7.2.4.102
1B0h	DSS_L3_PD_CTRL_STICKYBIT		Section 7.2.4.103
1B4h	DSP_PD_CTRL_MISC2		Section 7.2.4.104
1B8h	DSP_PD_CTRL_MISC3		Section 7.2.4.105
1BCh	DSP_PD_CTRL_OVERRIDE0		Section 7.2.4.106
1C0h	DSP_PD_CTRL_OVERRIDE1		Section 7.2.4.107
1C4h	DSP_PD_CTRL_OVERRIDE2		Section 7.2.4.108
1C8h	DSS_HWA_RST_CTRL		Section 7.2.4.109
1CCh	DSS_HWA_RST_CTRL		Section 7.2.4.109
1D0h	DSS_EDMA_RST_CTRL		Section 7.2.4.110
1D4h	DSS_EDMA_RST_CTRL		Section 7.2.4.110
1D8h	DSS_EDMA_RST_CTRL		Section 7.2.4.110
1DCh	DSS_EDMA_RST_CTRL		Section 7.2.4.110
1E0h	DSS_TPTCC_RST_CTRL		Section 7.2.4.111
FD0h	HW_SPARE_RW0		Section 7.2.4.112
FD4h	HW_SPARE_RW1		Section 7.2.4.113
FD8h	HW_SPARE_RW2		Section 7.2.4.114
FDCh	HW_SPARE_RW3		Section 7.2.4.115
FE0h	HW_SPARE_RO0		Section 7.2.4.116
FE4h	HW_SPARE_RO1		Section 7.2.4.117
FE8h	HW_SPARE_RO2		Section 7.2.4.118
FECh	HW_SPARE_RO3		Section 7.2.4.119
FF0h	HW_SPARE_WPH		Section 7.2.4.120
FF4h	HW_SPARE_REC		Section 7.2.4.121
1008h	LOCK0_KICK0	- KICK0 component	Section 7.2.4.122
100Ch	LOCK0_KICK1	- KICK1 component	Section 7.2.4.123
1010h	intr_raw_status	Interrupt Raw Status/Set Register	Section 7.2.4.124
1014h	intr_enabled_status_clear	Interrupt Enabled Status/Clear register	Section 7.2.4.125
1018h	intr_enable	Interrupt Enable register	Section 7.2.4.126
101Ch	intr_enable_clear	Interrupt Enable Clear register	Section 7.2.4.127

Copyright © 2025 Texas Instruments Incorporated

Table 6-294. DSS_RCM Registers (continued)

Offset	Acronym	Register Name	Section
1020h	eoi	EOI register	Section 7.2.4.128
1024h	fault_address	Fault Address register	Section 7.2.4.129
1028h	fault_type_status	Fault Type Status register	Section 7.2.4.130
102Ch	fault_attr_status	Fault Attribute Status register	Section 7.2.4.131
1030h	fault_clear	Fault Clear register	Section 7.2.4.132

Copyright © 2025 Texas Instruments Incorporated

6.2.4.1 PID Register (Offset = 0h) [reset = 61800213h]

PID is shown in Figure 6-291 and described in Table 6-295.

Return to the Summary Table.

PID register

Figure 6-291. PID Register

31	30	29	28	27	26	25	24
PID_msb16							
R-6180h							
23	22	21	20	19	18	17	16
PID_msb16							
R-6180h							
15	14	13	12	11	10	9	8
PID_misc					PID_major		
R-0h					R-2h		
7	6	5	4	3	2	1	0
PID_custom		PID_minor					
R-0h		R-13h					

Table 6-295. PID Register Field Descriptions

Bit	Field	Type	Reset	Description
31-16	PID_msb16	R	6180h	
15-11	PID_misc	R	0h	
10-8	PID_major	R	2h	
7-6	PID_custom	R	0h	
5-0	PID_minor	R	13h	

Copyright © 2025 Texas Instruments Incorporated

6.2.4.2 DSP_PD_CTRL Register (Offset = 14h) [reset = X]

DSP_PD_CTRL is shown in Figure 6-292 and described in Table 6-296.

Return to the Summary Table.

Figure 6-292. DSP_PD_CTRL Register

31	30	29	28	27	26	25	24
RESERVED							
R/W-X							
23	22	21	20	19	18	17	16
RESERVED							
R/W-X							
15	14	13	12	11	10	9	8
RESERVED							
R/W-X							
7	6	5	4	3	2	1	0
RESERVED			proc_halt	RESERVED			interrupt_mask
R/W-X			R/W-1h	R/W-X			R/W-1h

Table 6-296. DSP_PD_CTRL Register Field Descriptions

Bit	Field	Type	Reset	Description
31-5	RESERVED	R/W	X	
4	proc_halt	R/W	1h	Controls the unhalting on the processor during the power-up sequence Write 1 : The DSP is kept in halt state at the end of the power up sequence. The L2 memories can now be initialised and loaded before setting this bit to 0, unhalting the processor and begin execution Write 0 : The processor is unhalted at the end of the power up sequence. Here the assumption is the code is already downloaded in L2 and the processor can immediatey being execution on power up.
3-1	RESERVED	R/W	X	
0	interrupt_mask	R/W	1h	Masks interrupts to the DSP. Write 1 : Mask interrupts to the DSP before powering off the DSP. When masked, any interrupts are now stored in the Missed event register. Write 0 : Send the interrupts to the DSP after power on.

Copyright © 2025 Texas Instruments Incorporated

6.2.4.3 DSP_PD_TRIGGER_WAKUP Register (Offset = 18h) [reset = X]

DSP_PD_TRIGGER_WAKUP is shown in Figure 6-293 and described in Table 6-297.

Return to the Summary Table.

Figure 6-293. DSP_PD_TRIGGER_WAKUP Register

31	30	29	28	27	26	25	24
RESERVED							
R/W-X							
23	22	21	20	19	18	17	16
RESERVED							
R/W-X							
15	14	13	12	11	10	9	8
RESERVED							
R/W-X							
7	6	5	4	3	2	1	0
RESERVED							wakeup_trigger
R/W-X							R/W-0h

Table 6-297. DSP_PD_TRIGGER_WAKUP Register Field Descriptions

Bit	Field	Type	Reset	Description
31-1	RESERVED	R/W	X	
0	wakeup_trigger	R/W	0h	Write pulse bit field: Trigger Power Up of the DSP. Write 1 : Triggers DSP power up sequence

Copyright © 2025 Texas Instruments Incorporated

6.2.4.4 DSP_PD_TRIGGER_SLEEP Register (Offset = 1Ch) [reset = X]

DSP_PD_TRIGGER_SLEEP is shown in Figure 6-294 and described in Table 6-298.

Return to the Summary Table.

Figure 6-294. DSP_PD_TRIGGER_SLEEP Register

31	30	29	28	27	26	25	24
RESERVED							
R/W-X							
23	22	21	20	19	18	17	16
RESERVED							
R/W-X							
15	14	13	12	11	10	9	8
RESERVED							
R/W-X							
7	6	5	4	3	2	1	0
RESERVED							sleep_trigger
R/W-X							R/W-0h

Table 6-298. DSP_PD_TRIGGER_SLEEP Register Field Descriptions

Bit	Field	Type	Reset	Description
31-1	RESERVED	R/W	X	
0	sleep_trigger	R/W	0h	Write pulse bit field: Trigger Power Down of the DSP. Write 1 : Triggers DSP power down sequence

Copyright © 2025 Texas Instruments Incorporated

6.2.4.5 DSP_PD_STATUS Register (Offset = 20h) [reset = X]

DSP_PD_STATUS is shown in Figure 6-295 and described in Table 6-299.

Return to the Summary Table.

Figure 6-295. DSP_PD_STATUS Register

31	30	29	28	27	26	25	24
RESERVED							
R-X							
23	22	21	20	19	18	17	16
RESERVED							
R-X							
15	14	13	12	11	10	9	8
RESERVED							pwrsm_dbg_ovrd
R-X							R-0h
7	6	5	4	3	2	1	0
RESERVED		pd_status		RESERVED			proc_halted
R-X		R-0h		R-X			R-0h

Table 6-299. DSP_PD_STATUS Register Field Descriptions

Bit	Field	Type	Reset	Description
31-9	RESERVED	R	X	
8	pwrsm_dbg_ovrd	R	0h	Status bit indicating if there is an override for the DSP from Debug SubSystem. 0 : No override from DebugSS 1 : Override from DebugSS
7-6	RESERVED	R	X	
5-4	pd_status	R	0h	Power Mode status of DSP 00 : Powered OFF 01 : Transitioning from OFF to ON state 10 : Transitioning from ON to OFF state 11 : Powered ON
3-1	RESERVED	R	X	
0	proc_halted	R	0h	Processor is halted

Copyright © 2025 Texas Instruments Incorporated

6.2.4.6 DSP_PD_CTRL_MISC0 Register (Offset = 24h) [reset = X]

DSP_PD_CTRL_MISC0 is shown in Figure 6-296 and described in Table 6-300.

Return to the Summary Table.

Figure 6-296. DSP_PD_CTRL_MISC0 Register

31	30	29	28	27	26	25	24
RESERVED		pwrsm_grst_deassertcnt					
R/W-X		R/W-14h					
23	22	21	20	19	18	17	16
pwrsm_porrst_deassertcnt						pwrsm_lrst_assertcnt	
R/W-14h						R/W-14h	
15	14	13	12	11	10	9	8
pwrsm_lrst_assertcnt				pwrsm_grst_assertcnt			
R/W-14h				R/W-14h			
7	6	5	4	3	2	1	0
pwrsm_grst_assertcnt		pwrsm_porrst_assertcnt					
R/W-14h		R/W-14h					

Table 6-300. DSP_PD_CTRL_MISC0 Register Field Descriptions

Bit	Field	Type	Reset	Description
31-30	RESERVED	R/W	X	
29-24	pwrsm_grst_deassertcnt	R/W	14h	Debug Purposes only - No of cycles to wait after de-assertion of GRSTN during DSP Power-up sequence. Max allowed value is 31.
23-18	pwrsm_porrst_deassertcnt	R/W	14h	Debug Purposes only - No of cycles to wait after de-assertion of POR during DSP Power-up sequence. Max allowed value is 31.
17-12	pwrsm_lrst_assertcnt	R/W	14h	Debug Purposes only - No of cycles to wait after assertion of LRSTN during DSP Power-up sequence. Max allowed value is 31.
11-6	pwrsm_grst_assertcnt	R/W	14h	Debug Purposes only - No of cycles to wait after assertion of GRSTN during DSP Power-up sequence. Max allowed value is 31.
5-0	pwrsm_porrst_assertcnt	R/W	14h	Debug Purposes only - No of cycles to wait after assertion of POR during DSP Power-up sequence. Max allowed value is 31.

Copyright © 2025 Texas Instruments Incorporated

6.2.4.7 DSP_PD_CTRL_MISC1 Register (Offset = 28h) [reset = X]

DSP_PD_CTRL_MISC1 is shown in Figure 6-297 and described in Table 6-301.

Return to the Summary Table.

Figure 6-297. DSP_PD_CTRL_MISC1 Register

31	30	29	28	27	26	25	24
RESERVED					iso_sync_bypass		
R/W-X					R/W-0h		
23	22	21	20	19	18	17	16
RESERVED	rst_sync_bypass			RESERVED	pwrsm_lresetout_mask	pwrsm_isoen_assertcnt	
R/W-X	R/W-0h			R/W-X	R/W-0h	R/W-14h	
15	14	13	12	11	10	9	8
pwrsm_isoen_assertcnt				pwrsm_clkstop_deassertcnt			
R/W-14h				R/W-14h			
7	6	5	4	3	2	1	0
pwrsm_clkstop_deassertcnt				pwrsm_lrst_deassertcnt			
R/W-14h				R/W-14h			

Table 6-301. DSP_PD_CTRL_MISC1 Register Field Descriptions

Bit	Field	Type	Reset	Description
31-27	RESERVED	R/W	X	
26-24	iso_sync_bypass	R/W	0h	HW RnD reserved. Do not Touch - Only for debug purpose
23	RESERVED	R/W	X	
22-20	rst_sync_bypass	R/W	0h	HW RnD reserved. Do not Touch - Only for debug purpose
19	RESERVED	R/W	X	
18	pwrsm_lresetout_mask	R/W	0h	Debug Purposes only - 1:mask lresetout from DSPin FSM
17-12	pwrsm_isoen_assertcnt	R/W	14h	Debug Purposes only - No of cycles to wait after assertion of ISO_ENABLE during GEM power-down sequence. Max allowed value is 31.
11-6	pwrsm_clkstop_deassertcnt	R/W	14h	Debug Purposes only - No of cycles to wait after de-assertion of GEM_CLK_STOP_REQ during GEM Power-up sequence. Max allowed value is 31.
5-0	pwrsm_lrst_deassertcnt	R/W	14h	Debug Purposes only - No of cycles to wait after de-assertion of LRSTN during DSP Power-up sequence. Max allowed value is 31.

Copyright © 2025 Texas Instruments Incorporated

6.2.4.8 DSP_PD_STATUS_MISC0 Register (Offset = 2Ch) [reset = X]

DSP_PD_STATUS_MISC0 is shown in Figure 6-298 and described in Table 6-302.

Return to the Summary Table.

Figure 6-298. DSP_PD_STATUS_MISC0 Register

31	30	29	28	27	26	25	24
RESERVED							
R-X							
23	22	21	20	19	18	17	16
RESERVED						pwrsm_lrstout	pwrsm_c66_clkstop_ack
R-X						R-1h	R-1h
15	14	13	12	11	10	9	8
pwrsm_sdma_async2scr_clkstop_ack	pwrsm_sdma_async2rcm_clkstop_req	pwrsm_sdma_scr2async_clkstop_req	pwrsm_mem_agoodout	pwrsm_mem_aonout	pwrsm_mem_pgoodout	pwrsm_mem_ponout	pwrsm_pgoodout
R-1h	R-0h	R-1h	R-0h	R-0h	R-0h	R-0h	R-0h
7	6	5	4	3	2	1	0
pwrsm_ponout	RESERVED	state					
R-0h	R-X	R-1Fh					

Table 6-302. DSP_PD_STATUS_MISC0 Register Field Descriptions

Bit	Field	Type	Reset	Description
31-18	RESERVED	R	X	
17	pwrsm_lrstout	R	1h	Debug Purposes only - Lreset output indication from GEM
16	pwrsm_c66_clkstop_ack	R	1h	Debug Purposes only - Clock stop request ack from GEM
15	pwrsm_sdma_async2scr_clkstop_ack	R	1h	Debug Purposes only - SDMA slave disable Done from clock stop ack from the master port of the async bridge present in the SDMA port.
14	pwrsm_sdma_async2rcm_clkstop_req	R	0h	Debug Purposes only - SDMA Slave disable Ack from Interconnect. This is from the clock stop req signal coming from the slave port of the async bridge in SDMA.
13	pwrsm_sdma_scr2async_clkstop_req	R	1h	Debug Purposes only - Clock Stop request from SCR to SDMA Async Bridge
12	pwrsm_mem_agoodout	R	0h	Debug Purposes only - Memory AGOOD Output from GEM (synchronized to Bus clock)
11	pwrsm_mem_aonout	R	0h	Debug Purposes only - Memory AON Output from GEM (synchronized to Bus clock)
10	pwrsm_mem_pgoodout	R	0h	Debug Purposes only - Memory PGOOD Output from DSP (synchronized to Bus clock)
9	pwrsm_mem_ponout	R	0h	Debug Purposes only - Memory PON Output from DSP (synchronized to Bus clock)
8	pwrsm_pgoodout	R	0h	Debug Purposes only - Logic PGOOD Output from DSP (synchronized to Bus clock)
7	pwrsm_ponout	R	0h	Debug Purposes only - Logic PON Output from DSP (synchronized to Bus clock)
6	RESERVED	R	X	

Copyright © 2025 Texas Instruments Incorporated

Table 6-302. DSP_PD_STATUS_MISC0 Register Field Descriptions (continued)

Bit	Field	Type	Reset	Description
5-0	state	R	1Fh	This is the internal state of the DSP power State machine. Curretnly value of 13 needs to be polled to confirm we we can now download code to the L2 memory before unhalting the processor. Plan to change this in TPR and provide a single bit to poll on and move this to debug register since all the other states are irrelevant for SW

Copyright © 2025 Texas Instruments Incorporated

6.2.4.9 DSP_PD_WAKEUP_MASK0 Register (Offset = 30h) [reset = FFFFFFFFh]

DSP_PD_WAKEUP_MASK0 is shown in Figure 6-299 and described in Table 6-303.

Return to the Summary Table.

Figure 6-299. DSP_PD_WAKEUP_MASK0 Register

31	30	29	28	27	26	25	24	23	22	21	20	19	18	17	16	15	14	13	12	11	10	9	8	7	6	5	4	3	2	1	0
wakeup_mask0																															
R/W-FFFFFFFFh																															

Table 6-303. DSP_PD_WAKEUP_MASK0 Register Field Descriptions

Bit	Field	Type	Reset	Description
31-0	wakeup_mask0	R/W	FFFFFFFFh	Bit level mask for each of the wakeup source bits [31:0] 1 : Masked 0 : Unmasked

Copyright © 2025 Texas Instruments Incorporated

6.2.4.10 DSP_PD_WAKEUP_MASK1 Register (Offset = 34h) [reset = FFFFFFFFh]

DSP_PD_WAKEUP_MASK1 is shown in Figure 6-300 and described in Table 6-304.

Return to the Summary Table.

Figure 6-300. DSP_PD_WAKEUP_MASK1 Register

31	30	29	28	27	26	25	24	23	22	21	20	19	18	17	16	15	14	13	12	11	10	9	8	7	6	5	4	3	2	1	0
wakeup_mask1																															
R/W-FFFFFFFFh																															

Table 6-304. DSP_PD_WAKEUP_MASK1 Register Field Descriptions

Bit	Field	Type	Reset	Description
31-0	wakeup_mask1	R/W	FFFFFFFFh	Bit level mask for each of the wakeup source bits [63:32] 1 : Masked 0 : Unmasked.

Copyright © 2025 Texas Instruments Incorporated

6.2.4.11 DSP_PD_WAKEUP_MASK2 Register (Offset = 38h) [reset = FFFFFFFFh]

DSP_PD_WAKEUP_MASK2 is shown in Figure 6-301 and described in Table 6-305.

Return to the Summary Table.

Figure 6-301. DSP_PD_WAKEUP_MASK2 Register

31	30	29	28	27	26	25	24	23	22	21	20	19	18	17	16	15	14	13	12	11	10	9	8	7	6	5	4	3	2	1	0
wakeup_mask2																															
R/W-FFFFFFFFh																															

Table 6-305. DSP_PD_WAKEUP_MASK2 Register Field Descriptions

Bit	Field	Type	Reset	Description
31-0	wakeup_mask2	R/W	FFFFFFFFh	Bit level mask for each of the wakeup source bits [95:64] 1 : Masked 0 : Unmasked.

Copyright © 2025 Texas Instruments Incorporated

6.2.4.12 DSP_PD_WAKEUP_STATUS0 Register (Offset = 3Ch) [reset = 0h]

DSP_PD_WAKEUP_STATUS0 is shown in Figure 6-302 and described in Table 6-306.

Return to the Summary Table.

Figure 6-302. DSP_PD_WAKEUP_STATUS0 Register

31	30	29	28	27	26	25	24	23	22	21	20	19	18	17	16	15	14	13	12	11	10	9	8	7	6	5	4	3	2	1	0
wakeup_status0																															
R-0h																															

Table 6-306. DSP_PD_WAKEUP_STATUS0 Register Field Descriptions

Bit	Field	Type	Reset	Description
31-0	wakeup_status0	R	0h	Wakeup source status bits [31:0]

Copyright © 2025 Texas Instruments Incorporated

6.2.4.13 DSP_PD_WAKEUP_STATUS1 Register (Offset = 40h) [reset = 0h]

DSP_PD_WAKEUP_STATUS1 is shown in Figure 6-303 and described in Table 6-307.

Return to the Summary Table.

Figure 6-303. DSP_PD_WAKEUP_STATUS1 Register

31	30	29	28	27	26	25	24	23	22	21	20	19	18	17	16	15	14	13	12	11	10	9	8	7	6	5	4	3	2	1	0
wakeup_status1																															
R-0h																															

Table 6-307. DSP_PD_WAKEUP_STATUS1 Register Field Descriptions

Bit	Field	Type	Reset	Description
31-0	wakeup_status1	R	0h	Wakeup source status bits [63:32]

Copyright © 2025 Texas Instruments Incorporated

6.2.4.14 DSP_PD_WAKEUP_STATUS2 Register (Offset = 44h) [reset = 0h]

DSP_PD_WAKEUP_STATUS2 is shown in Figure 6-304 and described in Table 6-308.

Return to the Summary Table.

Figure 6-304. DSP_PD_WAKEUP_STATUS2 Register

31	30	29	28	27	26	25	24	23	22	21	20	19	18	17	16	15	14	13	12	11	10	9	8	7	6	5	4	3	2	1	0
wakeup_status2																															
R-0h																															

Table 6-308. DSP_PD_WAKEUP_STATUS2 Register Field Descriptions

Bit	Field	Type	Reset	Description
31-0	wakeup_status2	R	0h	Wakeup source status bits [95:64]

Copyright © 2025 Texas Instruments Incorporated

6.2.4.15 DSP_PD_WAKEUP_STATUS0_CLR Register (Offset = 48h) [reset = 0h]

DSP_PD_WAKEUP_STATUS0_CLR is shown in Figure 6-305 and described in Table 6-309.

Return to the Summary Table.

Figure 6-305. DSP_PD_WAKEUP_STATUS0_CLR Register

31	30	29	28	27	26	25	24	23	22	21	20	19	18	17	16	15	14	13	12	11	10	9	8	7	6	5	4	3	2	1	0
wakeup_status0_clr																															
R/W-0h																															

Table 6-309. DSP_PD_WAKEUP_STATUS0_CLR Register Field Descriptions

Bit	Field	Type	Reset	Description
31-0	wakeup_status0_clr	R/W	0h	Write pulse bit field: Clear bit for wakeup source status bits [31:0]. Write 0x1 to clear the corrsponding status bit : Its a wspecial access type, write to this field will generate a pulse

Copyright © 2025 Texas Instruments Incorporated

6.2.4.16 DSP_PD_WAKEUP_STATUS1_CLR Register (Offset = 4Ch) [reset = 0h]

DSP_PD_WAKEUP_STATUS1_CLR is shown in Figure 6-306 and described in Table 6-310.

Return to the Summary Table.

Figure 6-306. DSP_PD_WAKEUP_STATUS1_CLR Register

31	30	29	28	27	26	25	24	23	22	21	20	19	18	17	16	15	14	13	12	11	10	9	8	7	6	5	4	3	2	1	0
wakeup_status1_clr																															
R/W-0h																															

Table 6-310. DSP_PD_WAKEUP_STATUS1_CLR Register Field Descriptions

Bit	Field	Type	Reset	Description
31-0	wakeup_status1_clr	R/W	0h	Write pulse bit field: Clear bit for wakeup source status bits [63:32]. Write 0x1 to clear the corrsponding status bit : Its a wspecial access type, write to this field will generate a pulse

Copyright © 2025 Texas Instruments Incorporated

6.2.4.17 DSP_PD_WAKEUP_STATUS2_CLR Register (Offset = 50h) [reset = 0h]

DSP_PD_WAKEUP_STATUS2_CLR is shown in Figure 6-307 and described in Table 6-311.

Return to the Summary Table.

Figure 6-307. DSP_PD_WAKEUP_STATUS2_CLR Register

31	30	29	28	27	26	25	24	23	22	21	20	19	18	17	16	15	14	13	12	11	10	9	8	7	6	5	4	3	2	1	0
wakeup_status2_clr																															
R/W-0h																															

Table 6-311. DSP_PD_WAKEUP_STATUS2_CLR Register Field Descriptions

Bit	Field	Type	Reset	Description
31-0	wakeup_status2_clr	R/W	0h	Write pulse bit field: Clear bit for wakeup source status bits [95:64]. Write 0x1 to clear the corrsponding status bit : Its a wspecial access type, write to this field will generate a pulse

Copyright © 2025 Texas Instruments Incorporated

6.2.4.18 DSP_PD_MISSED_EVENT_MASK0 Register (Offset = 54h) [reset = FFFFFFFFh]

DSP_PD_MISSED_EVENT_MASK0 is shown in Figure 6-308 and described in Table 6-312.

Return to the Summary Table.

Figure 6-308. DSP_PD_MISSED_EVENT_MASK0 Register

31	30	29	28	27	26	25	24	23	22	21	20	19	18	17	16	15	14	13	12	11	10	9	8	7	6	5	4	3	2	1	0
missed_event_mask0																															
R/W-FFFFFFFFh																															

Table 6-312. DSP_PD_MISSED_EVENT_MASK0 Register Field Descriptions

Bit	Field	Type	Reset	Description
31-0	missed_event_mask0	R/W	FFFFFFFFh	Bit level mask for each of the missed events before getting pushed into DSP. Corresponds to Event lines[31:0] 1 : Masked 0 : Unmasked.

Copyright © 2025 Texas Instruments Incorporated

6.2.4.19 DSP_PD_MISSED_EVENT_MASK1 Register (Offset = 58h) [reset = FFFFFFFFh]

DSP_PD_MISSED_EVENT_MASK1 is shown in Figure 6-309 and described in Table 6-313.

Return to the Summary Table.

Figure 6-309. DSP_PD_MISSED_EVENT_MASK1 Register

31	30	29	28	27	26	25	24	23	22	21	20	19	18	17	16	15	14	13	12	11	10	9	8	7	6	5	4	3	2	1	0
missed_event_mask1																															
R/W-FFFFFFFFh																															

Table 6-313. DSP_PD_MISSED_EVENT_MASK1 Register Field Descriptions

Bit	Field	Type	Reset	Description
31-0	missed_event_mask1	R/W	FFFFFFFFh	Bit level mask for each of the missed events before getting pushed into DSP. Corresponds to Event lines[63:32] 1 : Masked 0 : Unmasked.

Copyright © 2025 Texas Instruments Incorporated

6.2.4.20 DSP_PD_MISSED_EVENT_MASK2 Register (Offset = 5Ch) [reset = FFFFFFFFh]

DSP_PD_MISSED_EVENT_MASK2 is shown in Figure 6-310 and described in Table 6-314.

Return to the Summary Table.

Figure 6-310. DSP_PD_MISSED_EVENT_MASK2 Register

31	30	29	28	27	26	25	24	23	22	21	20	19	18	17	16	15	14	13	12	11	10	9	8	7	6	5	4	3	2	1	0
missed_event_mask2																															
R/W-FFFFFFFFh																															

Table 6-314. DSP_PD_MISSED_EVENT_MASK2 Register Field Descriptions

Bit	Field	Type	Reset	Description
31-0	missed_event_mask2	R/W	FFFFFFFFh	Bit level mask for each of the missed events before getting pushed into DSP. Corresponds to Event lines[95:64] 1 : Masked 0 : Unmasked.

Copyright © 2025 Texas Instruments Incorporated

6.2.4.21 DSP_PD_MISSED_EVENT_STATUS0 Register (Offset = 60h) [reset = 0h]

DSP_PD_MISSED_EVENT_STATUS0 is shown in Figure 6-311 and described in Table 6-315.

Return to the Summary Table.

Figure 6-311. DSP_PD_MISSED_EVENT_STATUS0 Register

31	30	29	28	27	26	25	24	23	22	21	20	19	18	17	16	15	14	13	12	11	10	9	8	7	6	5	4	3	2	1	0
missed_event_status0																															
R-0h																															

Table 6-315. DSP_PD_MISSED_EVENT_STATUS0 Register Field Descriptions

Bit	Field	Type	Reset	Description
31-0	missed_event_status0	R	0h	Missed events monitor status for interrupts [31:0]. Interrupts to DSP that are masked by INTERRUPT_MASK register field are captured in this register

Copyright © 2025 Texas Instruments Incorporated

6.2.4.22 DSP_PD_MISSED_EVENT_STATUS1 Register (Offset = 64h) [reset = 0h]

DSP_PD_MISSED_EVENT_STATUS1 is shown in Figure 6-312 and described in Table 6-316.

Return to the Summary Table.

Figure 6-312. DSP_PD_MISSED_EVENT_STATUS1 Register

31	30	29	28	27	26	25	24	23	22	21	20	19	18	17	16	15	14	13	12	11	10	9	8	7	6	5	4	3	2	1	0
missed_event_status1																															
R-0h																															

Table 6-316. DSP_PD_MISSED_EVENT_STATUS1 Register Field Descriptions

Bit	Field	Type	Reset	Description
31-0	missed_event_status1	R	0h	Missed events monitor status for interrupts [63:32] Interrupts to DSP that are masked by INTERRUPT_MASK register field are captured in this register

Copyright © 2025 Texas Instruments Incorporated

6.2.4.23 DSP_PD_MISSED_EVENT_STATUS2 Register (Offset = 68h) [reset = 0h]

DSP_PD_MISSED_EVENT_STATUS2 is shown in Figure 6-313 and described in Table 6-317.

Return to the Summary Table.

Figure 6-313. DSP_PD_MISSED_EVENT_STATUS2 Register

31	30	29	28	27	26	25	24	23	22	21	20	19	18	17	16	15	14	13	12	11	10	9	8	7	6	5	4	3	2	1	0
missed_event_status2																															
R-0h																															

Table 6-317. DSP_PD_MISSED_EVENT_STATUS2 Register Field Descriptions

Bit	Field	Type	Reset	Description
31-0	missed_event_status2	R	0h	Missed events monitor status for interrupts [95:64] Interrupts to DSP that are masked by INTERRUPT_MASK register field are captured in this register

Copyright © 2025 Texas Instruments Incorporated

6.2.4.24 DSP_RST_CAUSE Register (Offset = 6Ch) [reset = X]

DSP_RST_CAUSE is shown in Figure 6-314 and described in Table 6-318.

Return to the Summary Table.

Figure 6-314. DSP_RST_CAUSE Register

31	30	29	28	27	26	25	24	23	22	21	20	19	18	17	16
RESERVED								por_cause							
R-X								R-1h							
15	14	13	12	11	10	9	8	7	6	5	4	3	2	1	0
grst_cause								lrst_cause							
R-1h								R-1h							

Table 6-318. DSP_RST_CAUSE Register Field Descriptions

Bit	Field	Type	Reset	Description
31-24	RESERVED	R	X	
23-16	por_cause	R	1h	DSP POR reset Bitwise Indication : Bit 0 : Por Reset Bit 1 : Sub system Reset from TOPRCM Bit 2 : Reset from DSS_RCM::DSS_DSP_RST_CTRL Bit 3 : Reset from Power FSM Bit 4 : Reset from STC FSM
15-8	grst_cause	R	1h	DSP Greset Bitwise Indication : Bit 0 : Por Reset Bit 1 : Sub system Reset from TOPRCM Bit 2 : Reset from DSS_RCM::DSS_DSP_RST_CTRL Bit 3 : Reset from Power FSM Bit 4 : Reset from STC FSM
7-0	lrst_cause	R	1h	DSP Lreset Bitwise Indication : Bit 0 : Por Reset Bit 1 : Sub system Reset from TOPRCM Bit 2 : Reset from DSS_RCM::DSS_DSP_RST_CTRL Bit 3 : Reset from Debugss Bit 4 : Reset from Power FSM Bit 5 : Reset from STC FSM

Copyright © 2025 Texas Instruments Incorporated

6.2.4.25 DSP_RST_CAUSE_CLR Register (Offset = 70h) [reset = X]

DSP_RST_CAUSE_CLR is shown in Figure 6-315 and described in Table 6-319.

Return to the Summary Table.

Figure 6-315. DSP_RST_CAUSE_CLR Register

31	30	29	28	27	26	25	24
RESERVED							
R/W-X							
23	22	21	20	19	18	17	16
RESERVED							
R/W-X							
15	14	13	12	11	10	9	8
RESERVED							
R/W-X							
7	6	5	4	3	2	1	0
RESERVED							clear
R/W-X							R/W-0h

Table 6-319. DSP_RST_CAUSE_CLR Register Field Descriptions

Bit	Field	Type	Reset	Description
31-1	RESERVED	R/W	X	
0	clear	R/W	0h	Write pulse bit field: Write 0x1 to clear the reset cause register for any previous resets : Its a wspecial access type, write to this field will generate a pulse

Copyright © 2025 Texas Instruments Incorporated

6.2.4.26 DSP_STC_PBIST_CTRL Register (Offset = 74h) [reset = X]

DSP_STC_PBIST_CTRL is shown in Figure 6-316 and described in Table 6-320.

Return to the Summary Table.

Figure 6-316. DSP_STC_PBIST_CTRL Register

31	30	29	28	27	26	25	24
RESERVED							
R/W-X							
23	22	21	20	19	18	17	16
RESERVED		pbist_tmode_vlct_assertcnt					
R/W-X		R/W-10h					
15	14	13	12	11	10	9	8
pbist_tmode_vlct_deassertcnt						pbist_selftest_key	
R/W-10h						R/W-0h	
7	6	5	4	3	2	1	0
pbist_selftest_key		stc_b2b_en	stc_clk_stp_ack_mask	proc_halt	stc_boot_en	mode_enable	
R/W-0h		R/W-0h	R/W-1h	R/W-1h	R/W-0h	R/W-0h	

Table 6-320. DSP_STC_PBIST_CTRL Register Field Descriptions

Bit	Field	Type	Reset	Description
31-22	RESERVED	R/W	X	
21-16	pbist_tmode_vlct_assertcnt	R/W	10h	No of clocks (in terms of 200 MHz DSPSS Bus clock) after asserting GEM TMODE VLCT signal before proceeding to the next state. Max allowed value is 31.
15-10	pbist_tmode_vlct_deassertcnt	R/W	10h	No of clocks (in terms of 200 MHz DSPSS Bus clock) after De-asserting GEM TMODE VLCT signal before proceeding to the next state. Max allowed value is 31.
9-6	pbist_selftest_key	R/W	0h	[4:1] DSP PBIST SELFTEST KEY = 4'b1010
5	stc_b2b_en	R/W	0h	Enables back to Back STC.Needs to be set to 1 for self test
4	stc_clk_stp_ack_mask	R/W	1h	Mask bit for ignoring the clock stop ack from GEM. This will be used for ignoring clock stop ack during boot-up. 1 --> Ignore clock stop ack from GEM. 0 --> Wait for clock stop ack from GEM after giving clock stop request.
3	proc_halt	R/W	1h	Configuration to halt the state machine before the final de-assertion of LRST to enable program download. 1 --> Halt, 0 --> Proceed.
2	stc_boot_en	R/W	0h	Enable GEM STC during GEM power UP
1-0	mode_enable	R/W	0h	Enable for PBIST and STC. 00 - Reserved, 01 --> STC only 10 --> PBIST only 11 --> PBIST followed by STC

Copyright © 2025 Texas Instruments Incorporated

6.2.4.27 DSP_STC_PBIST_STATUS Register (Offset = 78h) [reset = X]

DSP_STC_PBIST_STATUS is shown in Figure 6-317 and described in Table 6-321.

Return to the Summary Table.

Figure 6-317. DSP_STC_PBIST_STATUS Register

31	30	29	28	27	26	25	24
RESERVED							
R-X							
23	22	21	20	19	18	17	16
RESERVED							
R-X							
15	14	13	12	11	10	9	8
RESERVED							
R-X							
7	6	5	4	3	2	1	0
stc_pbist_sm_status						pbist_status	
R-0h						R-0h	

Table 6-321. DSP_STC_PBIST_STATUS Register Field Descriptions

Bit	Field	Type	Reset	Description
31-8	RESERVED	R	X	
7-2	stc_pbist_sm_status	R	0h	PBIST status from GEM. undefined - Fail Indication undefined - Done indication
1-0	pbist_status	R	0h	Current state of STC PBIST state machine

Copyright © 2025 Texas Instruments Incorporated

6.2.4.28 DSP_STC_PBIST_CTRL_MISC0 Register (Offset = 7Ch) [reset = 0h]

DSP_STC_PBIST_CTRL_MISC0 is shown in Figure 6-318 and described in Table 6-322.

Return to the Summary Table.

Figure 6-318. DSP_STC_PBIST_CTRL_MISC0 Register

31	30	29	28	27	26	25	24	23	22	21	20	19	18	17	16	15	14	13	12	11	10	9	8	7	6	5	4	3	2	1	0
byp_value																byp_en															
R/W-0h																R/W-0h															

Table 6-322. DSP_STC_PBIST_CTRL_MISC0 Register Field Descriptions

Bit	Field	Type	Reset	Description
31-16	byp_value	R/W	0h	DSP PBIST STC misc Control
15-0	byp_en	R/W	0h	DSP PBIST STC misc Control

Copyright © 2025 Texas Instruments Incorporated

6.2.4.29 DSP_STC_PBIST_CTRL_MISC1 Register (Offset = 80h) [reset = X]

DSP_STC_PBIST_CTRL_MISC1 is shown in Figure 6-319 and described in Table 6-323.

Return to the Summary Table.

Figure 6-319. DSP_STC_PBIST_CTRL_MISC1 Register

31	30	29	28	27	26	25	24
RESERVED							
R/W-X							
23	22	21	20	19	18	17	16
RESERVED							
R/W-X							
15	14	13	12	11	10	9	8
RESERVED						sm_ovr_val	
R/W-X						R/W-0h	
7	6	5	4	3	2	1	0
sm_ovr_val				sm_ovr_en	RESERVED		
R/W-0h				R/W-0h	R/W-X		

Table 6-323. DSP_STC_PBIST_CTRL_MISC1 Register Field Descriptions

Bit	Field	Type	Reset	Description
31-10	RESERVED	R/W	X	
9-4	sm_ovr_val	R/W	0h	TI Internal Register.Reserved for HW RnD
3	sm_ovr_en	R/W	0h	TI Internal Register.Reserved for HW RnD
2-0	RESERVED	R/W	X	

Copyright © 2025 Texas Instruments Incorporated

6.2.4.30 DSP_STC_PBIST_START Register (Offset = 84h) [reset = X]

DSP_STC_PBIST_START is shown in Figure 6-320 and described in Table 6-324.

Return to the Summary Table.

Figure 6-320. DSP_STC_PBIST_START Register

31	30	29	28	27	26	25	24
RESERVED							
R/W-X							
23	22	21	20	19	18	17	16
RESERVED							
R/W-X							
15	14	13	12	11	10	9	8
RESERVED							
R/W-X							
7	6	5	4	3	2	1	0
RESERVED							sm_trig
R/W-X							R/W-0h

Table 6-324. DSP_STC_PBIST_START Register Field Descriptions

Bit	Field	Type	Reset	Description
31-1	RESERVED	R/W	X	
0	sm_trig	R/W	0h	Write pulse bit field: Trigger pulse for the STC PBIST state machine. This is a self-clearing pulse. : Its a wspecial access type, write to this field will generate a pulse

Copyright © 2025 Texas Instruments Incorporated

6.2.4.31 DSP_STC_PBIST_STATUS_CLR Register (Offset = 88h) [reset = X]

DSP_STC_PBIST_STATUS_CLR is shown in Figure 6-321 and described in Table 6-325.

Return to the Summary Table.

Figure 6-321. DSP_STC_PBIST_STATUS_CLR Register

31	30	29	28	27	26	25	24
RESERVED							
R/W-X							
23	22	21	20	19	18	17	16
RESERVED							
R/W-X							
15	14	13	12	11	10	9	8
RESERVED							
R/W-X							
7	6	5	4	3	2	1	0
RESERVED							clear
R/W-X							R/W-0h

Table 6-325. DSP_STC_PBIST_STATUS_CLR Register Field Descriptions

Bit	Field	Type	Reset	Description
31-1	RESERVED	R/W	X	
0	clear	R/W	0h	Write pulse bit field: Clear bit for PBIST Status : Its a wspecial access type, write to this field will generate a pulse

Copyright © 2025 Texas Instruments Incorporated

6.2.4.32 DSS_DSP_CLK_SRC_SEL Register (Offset = 8Ch) [reset = X]

DSS_DSP_CLK_SRC_SEL is shown in Figure 6-322 and described in Table 6-326.

Return to the Summary Table.

Figure 6-322. DSS_DSP_CLK_SRC_SEL Register

31	30	29	28	27	26	25	24	23	22	21	20	19	18	17	16	15	14	13	12	11	10	9	8	7	6	5	4	3	2	1	0
RESERVED																				clksrcsel											
R/W-X																				R/W-0h											

Table 6-326. DSS_DSP_CLK_SRC_SEL Register Field Descriptions

Bit	Field	Type	Reset	Description
31-12	RESERVED	R/W	X	
11-0	clksrcsel	R/W	0h	Select line for selecting source clock for DSS DSP. Data should be loaded as multibit. For example: if Clock source 0x5 should be selected then 0x555 should be configured to the register.

Copyright © 2025 Texas Instruments Incorporated

6.2.4.33 DSS_HWA_CLK_SRC_SEL Register (Offset = 90h) [reset = X]

DSS_HWA_CLK_SRC_SEL is shown in Figure 6-323 and described in Table 6-327.

Return to the Summary Table.

Figure 6-323. DSS_HWA_CLK_SRC_SEL Register

31	30	29	28	27	26	25	24	23	22	21	20	19	18	17	16
RESERVED															
R/W-X															
15	14	13	12	11	10	9	8	7	6	5	4	3	2	1	0
RESERVED													clksrcsel		
R/W-X													R/W-0h		

Table 6-327. DSS_HWA_CLK_SRC_SEL Register Field Descriptions

Bit	Field	Type	Reset	Description
31-3	RESERVED	R/W	X	
2-0	clksrcsel	R/W	0h	Select line for selecting source clock for DSS HWA. Data should be loaded as multibit. Write 3'b000 : TOPRCM_CR5_CLK Write 3'b111 : TOPRCM_SYS_CLK

Copyright © 2025 Texas Instruments Incorporated

6.2.4.34 DSS_RTIA_CLK_SRC_SEL Register (Offset = 94h) [reset = X]

DSS_RTIA_CLK_SRC_SEL is shown in Figure 6-324 and described in Table 6-328.

Return to the Summary Table.

Figure 6-324. DSS_RTIA_CLK_SRC_SEL Register

31	30	29	28	27	26	25	24	23	22	21	20	19	18	17	16	15	14	13	12	11	10	9	8	7	6	5	4	3	2	1	0
RESERVED																				clksrcsel											
R/W-X																				R/W-0h											

Table 6-328. DSS_RTIA_CLK_SRC_SEL Register Field Descriptions

Bit	Field	Type	Reset	Description
31-12	RESERVED	R/W	X	
11-0	clksrcsel	R/W	0h	Select line for selecting source clock for DSS_RTIA. Data should be loaded as multibit. For example: if Clock source 0x5 should be selected then 0x555 should be configured to the register.

Copyright © 2025 Texas Instruments Incorporated

6.2.4.35 DSS_RTIB_CLK_SRC_SEL Register (Offset = 98h) [reset = X]

DSS_RTIB_CLK_SRC_SEL is shown in Figure 6-325 and described in Table 6-329.

Return to the Summary Table.

Figure 6-325. DSS_RTIB_CLK_SRC_SEL Register

31	30	29	28	27	26	25	24	23	22	21	20	19	18	17	16	15	14	13	12	11	10	9	8	7	6	5	4	3	2	1	0
RESERVED																				clksrcsel											
R/W-X																				R/W-0h											

Table 6-329. DSS_RTIB_CLK_SRC_SEL Register Field Descriptions

Bit	Field	Type	Reset	Description
31-12	RESERVED	R/W	X	
11-0	clksrcsel	R/W	0h	Select line for selecting source clock for DSS RTIB. Data should be loaded as multibit. For example: if Clock source 0x5 should be selected then 0x555 should be configured to the register.

Copyright © 2025 Texas Instruments Incorporated

6.2.4.36 DSS_WDT_CLK_SRC_SEL Register (Offset = 9Ch) [reset = X]

DSS_WDT_CLK_SRC_SEL is shown in Figure 6-326 and described in Table 6-330.

Return to the Summary Table.

Figure 6-326. DSS_WDT_CLK_SRC_SEL Register

31	30	29	28	27	26	25	24	23	22	21	20	19	18	17	16	15	14	13	12	11	10	9	8	7	6	5	4	3	2	1	0
RESERVED																				clksrcsel											
R/W-X																				R/W-0h											

Table 6-330. DSS_WDT_CLK_SRC_SEL Register Field Descriptions

Bit	Field	Type	Reset	Description
31-12	RESERVED	R/W	X	
11-0	clksrcsel	R/W	0h	Select line for selecting source clock for DSS Watchdog. Data should be loaded as multibit. For example: if Clock source 0x5 should be selected then 0x555 should be configured to the register.

Copyright © 2025 Texas Instruments Incorporated

6.2.4.37 DSS_SCIA_CLK_SRC_SEL Register (Offset = A0h) [reset = X]

DSS_SCIA_CLK_SRC_SEL is shown in Figure 6-327 and described in Table 6-331.

Return to the Summary Table.

Figure 6-327. DSS_SCIA_CLK_SRC_SEL Register

31	30	29	28	27	26	25	24	23	22	21	20	19	18	17	16	15	14	13	12	11	10	9	8	7	6	5	4	3	2	1	0
RESERVED																				clksrcsel											
R/W-X																				R/W-0h											

Table 6-331. DSS_SCIA_CLK_SRC_SEL Register Field Descriptions

Bit	Field	Type	Reset	Description
31-12	RESERVED	R/W	X	
11-0	clksrcsel	R/W	0h	Select line for selecting source clock for DSS SCIA. Data should be loaded as multibit. For example: if Clock source 0x5 should be selected then 0x555 should be configured to the register.

Copyright © 2025 Texas Instruments Incorporated

6.2.4.38 DSS_DSP_CLK_DIV_VAL Register (Offset = A4h) [reset = X]

DSS_DSP_CLK_DIV_VAL is shown in Figure 6-328 and described in Table 6-332.

Return to the Summary Table.

Figure 6-328. DSS_DSP_CLK_DIV_VAL Register

31	30	29	28	27	26	25	24	23	22	21	20	19	18	17	16	15	14	13	12	11	10	9	8	7	6	5	4	3	2	1	0
RESERVED																				clkdiv											
R/W-X																				R/W-0h											

Table 6-332. DSS_DSP_CLK_DIV_VAL Register Field Descriptions

Bit	Field	Type	Reset	Description
31-12	RESERVED	R/W	X	
11-0	clkdiv	R/W	0h	Divider value for DSS DSP selected clock. Data should be loaded as multibit. For example: if divider value of 0x5 should be selected then 0x555 should be configured to the register.

Copyright © 2025 Texas Instruments Incorporated

6.2.4.39 DSS_RTIA_CLK_DIV_VAL Register (Offset = A8h) [reset = X]

DSS_RTIA_CLK_DIV_VAL is shown in Figure 6-329 and described in Table 6-333.

Return to the Summary Table.

Figure 6-329. DSS_RTIA_CLK_DIV_VAL Register

31	30	29	28	27	26	25	24	23	22	21	20	19	18	17	16	15	14	13	12	11	10	9	8	7	6	5	4	3	2	1	0
RESERVED																				clkdiv											
R/W-X																				R/W-0h											

Table 6-333. DSS_RTIA_CLK_DIV_VAL Register Field Descriptions

Bit	Field	Type	Reset	Description
31-12	RESERVED	R/W	X	
11-0	clkdiv	R/W	0h	Divider value for DSS RTIA selected clock. Data should be loaded as multibit. For example: if divider value of 0x5 should be selected then 0x555 should be configured to the register.

Copyright © 2025 Texas Instruments Incorporated

6.2.4.40 DSS_RTIB_CLK_DIV_VAL Register (Offset = ACh) [reset = X]

DSS_RTIB_CLK_DIV_VAL is shown in Figure 6-330 and described in Table 6-334.

Return to the Summary Table.

Figure 6-330. DSS_RTIB_CLK_DIV_VAL Register

31	30	29	28	27	26	25	24	23	22	21	20	19	18	17	16	15	14	13	12	11	10	9	8	7	6	5	4	3	2	1	0
RESERVED																				clkdiv											
R/W-X																				R/W-0h											

Table 6-334. DSS_RTIB_CLK_DIV_VAL Register Field Descriptions

Bit	Field	Type	Reset	Description
31-12	RESERVED	R/W	X	
11-0	clkdiv	R/W	0h	Divider value for DSS RTIB selected clock. Data should be loaded as multibit. For example: if divider value of 0x5 should be selected then 0x555 should be configured to the register.

Copyright © 2025 Texas Instruments Incorporated

6.2.4.41 DSS_WDT_CLK_DIV_VAL Register (Offset = B0h) [reset = X]

DSS_WDT_CLK_DIV_VAL is shown in Figure 6-331 and described in Table 6-335.

Return to the Summary Table.

Figure 6-331. DSS_WDT_CLK_DIV_VAL Register

31	30	29	28	27	26	25	24	23	22	21	20	19	18	17	16	15	14	13	12	11	10	9	8	7	6	5	4	3	2	1	0
RESERVED																				clkdiv											
R/W-X																				R/W-0h											

Table 6-335. DSS_WDT_CLK_DIV_VAL Register Field Descriptions

Bit	Field	Type	Reset	Description
31-12	RESERVED	R/W	X	
11-0	clkdiv	R/W	0h	Divider value for DSS Watchdog selected clock. Data should be loaded as multibit. For example: if divider value of 0x5 should be selected then 0x555 should be configured to the register.

Copyright © 2025 Texas Instruments Incorporated

6.2.4.42 DSS_SCIA_CLK_DIV_VAL Register (Offset = B4h) [reset = X]

DSS_SCIA_CLK_DIV_VAL is shown in Figure 6-332 and described in Table 6-336.

Return to the Summary Table.

Figure 6-332. DSS_SCIA_CLK_DIV_VAL Register

31	30	29	28	27	26	25	24	23	22	21	20	19	18	17	16	15	14	13	12	11	10	9	8	7	6	5	4	3	2	1	0
RESERVED																				clkdiv											
R/W-X																				R/W-0h											

Table 6-336. DSS_SCIA_CLK_DIV_VAL Register Field Descriptions

Bit	Field	Type	Reset	Description
31-12	RESERVED	R/W	X	
11-0	clkdiv	R/W	0h	Divider value for DSS SCIA selected clock. Data should be loaded as multibit. For example: if divider value of 0x5 should be selected then 0x555 should be configured to the register.

Copyright © 2025 Texas Instruments Incorporated

6.2.4.43 DSS_DSP_CLK_GATE Register (Offset = B8h) [reset = X]

DSS_DSP_CLK_GATE is shown in Figure 6-333 and described in Table 6-337.

Return to the Summary Table.

Figure 6-333. DSS_DSP_CLK_GATE Register

31	30	29	28	27	26	25	24	23	22	21	20	19	18	17	16
RESERVED															
R/W-X															
15	14	13	12	11	10	9	8	7	6	5	4	3	2	1	0
RESERVED													gated		
R/W-X													R/W-0h		

Table 6-337. DSS_DSP_CLK_GATE Register Field Descriptions

Bit	Field	Type	Reset	Description
31-3	RESERVED	R/W	X	
2-0	gated	R/W	0h	Clock gating config for DSS DSP. Data should be loaded as multibit. Write 3'b000 : Clock is ungated Write 3'b111 : Clock is gated

Copyright © 2025 Texas Instruments Incorporated

6.2.4.44 DSS_HWA_CLK_GATE Register (Offset = BCh) [reset = X]

DSS_HWA_CLK_GATE is shown in Figure 6-334 and described in Table 6-338.

Return to the Summary Table.

Figure 6-334. DSS_HWA_CLK_GATE Register

31	30	29	28	27	26	25	24	23	22	21	20	19	18	17	16
RESERVED															
R/W-X															
15	14	13	12	11	10	9	8	7	6	5	4	3	2	1	0
RESERVED													gated		
R/W-X													R/W-0h		

Table 6-338. DSS_HWA_CLK_GATE Register Field Descriptions

Bit	Field	Type	Reset	Description
31-3	RESERVED	R/W	X	
2-0	gated	R/W	0h	Clock gating config for DSS HWA Data should be loaded as multibit. Write 3'b000 : Clock is ungated Write 3'b111 : Clock is gated

Copyright © 2025 Texas Instruments Incorporated

6.2.4.45 DSS_RTIA_CLK_GATE Register (Offset = C0h) [reset = X]

DSS_RTIA_CLK_GATE is shown in Figure 6-335 and described in Table 6-339.

Return to the Summary Table.

Figure 6-335. DSS_RTIA_CLK_GATE Register

31	30	29	28	27	26	25	24	23	22	21	20	19	18	17	16
RESERVED															
R/W-X															
15	14	13	12	11	10	9	8	7	6	5	4	3	2	1	0
RESERVED													gated		
R/W-X													R/W-0h		

Table 6-339. DSS_RTIA_CLK_GATE Register Field Descriptions

Bit	Field	Type	Reset	Description
31-3	RESERVED	R/W	X	
2-0	gated	R/W	0h	Clock gating config for DSS RTA Data should be loaded as multibit. Write 3'b000 : Clock is ungated Write 3'b111 : Clock is gated

Copyright © 2025 Texas Instruments Incorporated

6.2.4.46 DSS_RTIB_CLK_GATE Register (Offset = C4h) [reset = X]

DSS_RTIB_CLK_GATE is shown in Figure 6-336 and described in Table 6-340.

Return to the Summary Table.

Figure 6-336. DSS_RTIB_CLK_GATE Register

31	30	29	28	27	26	25	24	23	22	21	20	19	18	17	16
RESERVED															
R/W-X															
15	14	13	12	11	10	9	8	7	6	5	4	3	2	1	0
RESERVED													gated		
R/W-X													R/W-0h		

Table 6-340. DSS_RTIB_CLK_GATE Register Field Descriptions

Bit	Field	Type	Reset	Description
31-3	RESERVED	R/W	X	
2-0	gated	R/W	0h	Clock gating config for DSS RTIB Data should be loaded as multibit. Write 3'b000 : Clock is ungated Write 3'b111 : Clock is gated

Copyright © 2025 Texas Instruments Incorporated

6.2.4.47 DSS_WDT_CLK_GATE Register (Offset = C8h) [reset = X]

DSS_WDT_CLK_GATE is shown in Figure 6-337 and described in Table 6-341.

Return to the Summary Table.

Figure 6-337. DSS_WDT_CLK_GATE Register

31	30	29	28	27	26	25	24	23	22	21	20	19	18	17	16
RESERVED															
R/W-X															
15	14	13	12	11	10	9	8	7	6	5	4	3	2	1	0
RESERVED													gated		
R/W-X													R/W-0h		

Table 6-341. DSS_WDT_CLK_GATE Register Field Descriptions

Bit	Field	Type	Reset	Description
31-3	RESERVED	R/W	X	
2-0	gated	R/W	0h	Clock gating config for DSS Watchdog Data should be loaded as multibit. Write 3'b000 : Clock is ungated Write 3'b111 : Clock is gated

Copyright © 2025 Texas Instruments Incorporated

6.2.4.48 DSS_SCIA_CLK_GATE Register (Offset = CCh) [reset = X]

DSS_SCIA_CLK_GATE is shown in Figure 6-338 and described in Table 6-342.

Return to the Summary Table.

Figure 6-338. DSS_SCIA_CLK_GATE Register

31	30	29	28	27	26	25	24	23	22	21	20	19	18	17	16
RESERVED															
R/W-X															
15	14	13	12	11	10	9	8	7	6	5	4	3	2	1	0
RESERVED													gated		
R/W-X													R/W-0h		

Table 6-342. DSS_SCIA_CLK_GATE Register Field Descriptions

Bit	Field	Type	Reset	Description
31-3	RESERVED	R/W	X	
2-0	gated	R/W	0h	Clock gating config for DSS SCIA Data should be loaded as multibit. Write 3'b000 : Clock is ungated Write 3'b111 : Clock is gated

Copyright © 2025 Texas Instruments Incorporated

6.2.4.49 DSS_CBUFF_CLK_GATE Register (Offset = D0h) [reset = X]

DSS_CBUFF_CLK_GATE is shown in Figure 6-339 and described in Table 6-343.

Return to the Summary Table.

Figure 6-339. DSS_CBUFF_CLK_GATE Register

31	30	29	28	27	26	25	24	23	22	21	20	19	18	17	16
RESERVED															
R/W-X															
15	14	13	12	11	10	9	8	7	6	5	4	3	2	1	0
RESERVED													gated		
R/W-X													R/W-0h		

Table 6-343. DSS_CBUFF_CLK_GATE Register Field Descriptions

Bit	Field	Type	Reset	Description
31-3	RESERVED	R/W	X	
2-0	gated	R/W	0h	Clock gating config for DSS CBUFF Data should be loaded as multibit. Write 3'b000 : Clock is ungated Write 3'b111 : Clock is gated

Copyright © 2025 Texas Instruments Incorporated

6.2.4.50 DSS_DSP_CLK_STATUS Register (Offset = D4h) [reset = X]

DSS_DSP_CLK_STATUS is shown in Figure 6-340 and described in Table 6-344.

Return to the Summary Table.

Figure 6-340. DSS_DSP_CLK_STATUS Register

31	30	29	28	27	26	25	24	23	22	21	20	19	18	17	16
RESERVED															
R-X															
15	14	13	12	11	10	9	8	7	6	5	4	3	2	1	0
currdivider								clkinuse							
R-0h								R-1h							

Table 6-344. DSS_DSP_CLK_STATUS Register Field Descriptions

Bit	Field	Type	Reset	Description
31-16	RESERVED	R	X	
15-8	currdivider	R	0h	Status shows the current divider value chosen for DSS DSP Clock
7-0	clkinuse	R	1h	Status shows the source clock selected for DSS DSP Clock

Copyright © 2025 Texas Instruments Incorporated

6.2.4.51 DSS_HWA_CLK_STATUS Register (Offset = D8h) [reset = X]

DSS_HWA_CLK_STATUS is shown in Figure 6-341 and described in Table 6-345.

Return to the Summary Table.

Figure 6-341. DSS_HWA_CLK_STATUS Register

31	30	29	28	27	26	25	24
RESERVED							
R-X							
23	22	21	20	19	18	17	16
RESERVED							
R-X							
15	14	13	12	11	10	9	8
RESERVED							
R-X							
7	6	5	4	3	2	1	0
RESERVED						clkinuse	
R-X						R-1h	

Table 6-345. DSS_HWA_CLK_STATUS Register Field Descriptions

Bit	Field	Type	Reset	Description
31-2	RESERVED	R	X	
1-0	clkinuse	R	1h	Status shows the source clock selected for DSS HWA Clock

Copyright © 2025 Texas Instruments Incorporated

6.2.4.52 DSS_RTIA_CLK_STATUS Register (Offset = DCh) [reset = X]

DSS_RTIA_CLK_STATUS is shown in Figure 6-342 and described in Table 6-346.

Return to the Summary Table.

Figure 6-342. DSS_RTIA_CLK_STATUS Register

31	30	29	28	27	26	25	24	23	22	21	20	19	18	17	16
RESERVED															
R-X															
15	14	13	12	11	10	9	8	7	6	5	4	3	2	1	0
currdivider								clkinuse							
R-0h								R-1h							

Table 6-346. DSS_RTIA_CLK_STATUS Register Field Descriptions

Bit	Field	Type	Reset	Description
31-16	RESERVED	R	X	
15-8	currdivider	R	0h	Status shows the current divider value chosen for DSS RTIA Clock
7-0	clkinuse	R	1h	Status shows the source clock selected for DSS RTIA Clock

Copyright © 2025 Texas Instruments Incorporated

6.2.4.53 DSS_RTIB_CLK_STATUS Register (Offset = E0h) [reset = X]

DSS_RTIB_CLK_STATUS is shown in Figure 6-343 and described in Table 6-347.

Return to the Summary Table.

Figure 6-343. DSS_RTIB_CLK_STATUS Register

31	30	29	28	27	26	25	24	23	22	21	20	19	18	17	16
RESERVED															
R-X															
15	14	13	12	11	10	9	8	7	6	5	4	3	2	1	0
currdivider								clkinuse							
R-0h								R-1h							

Table 6-347. DSS_RTIB_CLK_STATUS Register Field Descriptions

Bit	Field	Type	Reset	Description
31-16	RESERVED	R	X	
15-8	currdivider	R	0h	Status shows the current divider value chosen for DSS RTIB Clock
7-0	clkinuse	R	1h	Status shows the source clock selected for DSS RTIB Clock

Copyright © 2025 Texas Instruments Incorporated

6.2.4.54 DSS_WDT_CLK_STATUS Register (Offset = E4h) [reset = X]

DSS_WDT_CLK_STATUS is shown in Figure 6-344 and described in Table 6-348.

Return to the Summary Table.

Figure 6-344. DSS_WDT_CLK_STATUS Register

31	30	29	28	27	26	25	24	23	22	21	20	19	18	17	16
RESERVED															
R-X															
15	14	13	12	11	10	9	8	7	6	5	4	3	2	1	0
currdivider								clkinuse							
R-0h								R-1h							

Table 6-348. DSS_WDT_CLK_STATUS Register Field Descriptions

Bit	Field	Type	Reset	Description
31-16	RESERVED	R	X	
15-8	currdivider	R	0h	Status shows the current divider value chosen for DSS Watchdog Clock
7-0	clkinuse	R	1h	Status shows the source clock selected for DSS Watchdog Clock

Copyright © 2025 Texas Instruments Incorporated

6.2.4.55 DSS_SCIA_CLK_STATUS Register (Offset = E8h) [reset = X]

DSS_SCIA_CLK_STATUS is shown in Figure 6-345 and described in Table 6-349.

Return to the Summary Table.

Figure 6-345. DSS_SCIA_CLK_STATUS Register

31	30	29	28	27	26	25	24	23	22	21	20	19	18	17	16
RESERVED															
R-X															
15	14	13	12	11	10	9	8	7	6	5	4	3	2	1	0
currdivider								clkinuse							
R-0h								R-1h							

Table 6-349. DSS_SCIA_CLK_STATUS Register Field Descriptions

Bit	Field	Type	Reset	Description
31-16	RESERVED	R	X	
15-8	currdivider	R	0h	Status shows the current divider value chosen for DSS SCIA Clock
7-0	clkinuse	R	1h	Status shows the source clock selected for DSS SCIA Clock

Copyright © 2025 Texas Instruments Incorporated

6.2.4.56 DSS_DSP_RST_CTRL Register (Offset = ECh) [reset = X]

DSS_DSP_RST_CTRL is shown in Figure 6-346 and described in Table 6-350.

Return to the Summary Table.

Figure 6-346. DSS_DSP_RST_CTRL Register

31	30	29	28	27	26	25	24
RESERVED							
R/W-X							
23	22	21	20	19	18	17	16
RESERVED							
R/W-X							
15	14	13	12	11	10	9	8
RESERVED					assert_local		
R/W-X					R/W-7h		
7	6	5	4	3	2	1	0
RESERVED	assert_global			RESERVED	assert_por		
R/W-X	R/W-7h			R/W-X	R/W-7h		

Table 6-350. DSS_DSP_RST_CTRL Register Field Descriptions

Bit	Field	Type	Reset	Description
31-11	RESERVED	R/W	X	
10-8	assert_local	R/W	7h	Local Reset control for DSS DSP Data should be loaded as multibit. Write 3'b000: Reset is not asserted by SW. Write 3'b111 : Reset is asserted by SW
7	RESERVED	R/W	X	
6-4	assert_global	R/W	7h	Global Reset control for DSS DSP Data should be loaded as multibit. Write 3'b000: Reset is not asserted by SW. Write 3'b111 : Reset is asserted by SW
3	RESERVED	R/W	X	
2-0	assert_por	R/W	7h	Power on Reset control for DSS DSP Data should be loaded as multibit. Write 3'b000: Reset is not asserted by SW. Write 3'b111 : Reset is asserted by SW

Copyright © 2025 Texas Instruments Incorporated

6.2.4.57 DSS_ESM_RST_CTRL Register (Offset = F0h) [reset = X]

DSS_ESM_RST_CTRL is shown in Figure 6-347 and described in Table 6-351.

Return to the Summary Table.

Figure 6-347. DSS_ESM_RST_CTRL Register

31	30	29	28	27	26	25	24	23	22	21	20	19	18	17	16
RESERVED															
R/W-X															
15	14	13	12	11	10	9	8	7	6	5	4	3	2	1	0
RESERVED													assert		
R/W-X													R/W-0h		

Table 6-351. DSS_ESM_RST_CTRL Register Field Descriptions

Bit	Field	Type	Reset	Description
31-3	RESERVED	R/W	X	
2-0	assert	R/W	0h	This feature is for debug purpose only. Software needs to ensure the state of Device/IP before configuring. Writing 3'b11 will assert reset for DSS ESM

Copyright © 2025 Texas Instruments Incorporated

6.2.4.58 DSS_SCIA_RST_CTRL Register (Offset = F4h) [reset = X]

DSS_SCIA_RST_CTRL is shown in Figure 6-348 and described in Table 6-352.

Return to the Summary Table.

Figure 6-348. DSS_SCIA_RST_CTRL Register

31	30	29	28	27	26	25	24	23	22	21	20	19	18	17	16
RESERVED															
R/W-X															
15	14	13	12	11	10	9	8	7	6	5	4	3	2	1	0
RESERVED													assert		
R/W-X													R/W-0h		

Table 6-352. DSS_SCIA_RST_CTRL Register Field Descriptions

Bit	Field	Type	Reset	Description
31-3	RESERVED	R/W	X	
2-0	assert	R/W	0h	This feature is for debug purpose only. Software needs to ensure the state of Device/IP before configuring. Writing 3'b11 will assert reset for DSS SCIA

Copyright © 2025 Texas Instruments Incorporated

6.2.4.59 DSS_RTIA_RST_CTRL Register (Offset = F8h) [reset = X]

DSS_RTIA_RST_CTRL is shown in Figure 6-349 and described in Table 6-353.

Return to the Summary Table.

Figure 6-349. DSS_RTIA_RST_CTRL Register

31	30	29	28	27	26	25	24	23	22	21	20	19	18	17	16
RESERVED															
R/W-X															
15	14	13	12	11	10	9	8	7	6	5	4	3	2	1	0
RESERVED													assert		
R/W-X													R/W-0h		

Table 6-353. DSS_RTIA_RST_CTRL Register Field Descriptions

Bit	Field	Type	Reset	Description
31-3	RESERVED	R/W	X	
2-0	assert	R/W	0h	This feature is for debug purpose only. Software needs to ensure the state of Device/IP before configuring. Writing 3'b11 will assert reset for DSS RTIA

Copyright © 2025 Texas Instruments Incorporated

6.2.4.60 DSS_RTIB_RST_CTRL Register (Offset = FCh) [reset = X]

DSS_RTIB_RST_CTRL is shown in Figure 6-350 and described in Table 6-354.

Return to the Summary Table.

Figure 6-350. DSS_RTIB_RST_CTRL Register

31	30	29	28	27	26	25	24	23	22	21	20	19	18	17	16
RESERVED															
R/W-X															
15	14	13	12	11	10	9	8	7	6	5	4	3	2	1	0
RESERVED													assert		
R/W-X													R/W-0h		

Table 6-354. DSS_RTIB_RST_CTRL Register Field Descriptions

Bit	Field	Type	Reset	Description
31-3	RESERVED	R/W	X	
2-0	assert	R/W	0h	This feature is for debug purpose only. Software needs to ensure the state of Device/IP before configuring. Writing 3'b11 will assert reset for DSS RTIB

Copyright © 2025 Texas Instruments Incorporated

6.2.4.61 DSS_WDT_RST_CTRL Register (Offset = 100h) [reset = X]

DSS_WDT_RST_CTRL is shown in Figure 6-351 and described in Table 6-355.

Return to the Summary Table.

Figure 6-351. DSS_WDT_RST_CTRL Register

31	30	29	28	27	26	25	24	23	22	21	20	19	18	17	16
RESERVED															
R/W-X															
15	14	13	12	11	10	9	8	7	6	5	4	3	2	1	0
RESERVED													assert		
R/W-X													R/W-0h		

Table 6-355. DSS_WDT_RST_CTRL Register Field Descriptions

Bit	Field	Type	Reset	Description
31-3	RESERVED	R/W	X	
2-0	assert	R/W	0h	This feature is for debug purpose only. Software needs to ensure the state of Device/IP before configuring. Writing 3'b11 will assert reset for DSS Watchdog

Copyright © 2025 Texas Instruments Incorporated

6.2.4.62 DSS_DCCA_RST_CTRL Register (Offset = 104h) [reset = X]

DSS_DCCA_RST_CTRL is shown in Figure 6-352 and described in Table 6-356.

Return to the Summary Table.

Figure 6-352. DSS_DCCA_RST_CTRL Register

31	30	29	28	27	26	25	24	23	22	21	20	19	18	17	16
RESERVED															
R/W-X															
15	14	13	12	11	10	9	8	7	6	5	4	3	2	1	0
RESERVED													assert		
R/W-X													R/W-0h		

Table 6-356. DSS_DCCA_RST_CTRL Register Field Descriptions

Bit	Field	Type	Reset	Description
31-3	RESERVED	R/W	X	
2-0	assert	R/W	0h	This feature is for debug purpose only. Software needs to ensure the state of Device/IP before configuring. Writing 3'b11 will assert reset for DSS DCCA

Copyright © 2025 Texas Instruments Incorporated

6.2.4.63 DSS_DCCB_RST_CTRL Register (Offset = 108h) [reset = X]

DSS_DCCB_RST_CTRL is shown in Figure 6-353 and described in Table 6-357.

Return to the Summary Table.

Figure 6-353. DSS_DCCB_RST_CTRL Register

31	30	29	28	27	26	25	24	23	22	21	20	19	18	17	16
RESERVED															
R/W-X															
15	14	13	12	11	10	9	8	7	6	5	4	3	2	1	0
RESERVED													assert		
R/W-X													R/W-0h		

Table 6-357. DSS_DCCB_RST_CTRL Register Field Descriptions

Bit	Field	Type	Reset	Description
31-3	RESERVED	R/W	X	
2-0	assert	R/W	0h	This feature is for debug purpose only. Software needs to ensure the state of Device/IP before configuring. Writing 3'b11 will assert reset for DSS DCCB

Copyright © 2025 Texas Instruments Incorporated

6.2.4.64 DSS_MCRC_RST_CTRL Register (Offset = 10Ch) [reset = X]

DSS_MCRC_RST_CTRL is shown in Figure 6-354 and described in Table 6-358.

Return to the Summary Table.

Figure 6-354. DSS_MCRC_RST_CTRL Register

31	30	29	28	27	26	25	24	23	22	21	20	19	18	17	16
RESERVED															
R/W-X															
15	14	13	12	11	10	9	8	7	6	5	4	3	2	1	0
RESERVED													assert		
R/W-X													R/W-0h		

Table 6-358. DSS_MCRC_RST_CTRL Register Field Descriptions

Bit	Field	Type	Reset	Description
31-3	RESERVED	R/W	X	
2-0	assert	R/W	0h	This feature is for debug purpose only. Software needs to ensure the state of Device/IP before configuring. Writing 3'b11 will assert reset for DSS MCRC

Copyright © 2025 Texas Instruments Incorporated

6.2.4.65 DSP_DFT_DIV_CTRL Register (Offset = 110h) [reset = X]

DSP_DFT_DIV_CTRL is shown in Figure 6-355 and described in Table 6-359.

Return to the Summary Table.

Figure 6-355. DSP_DFT_DIV_CTRL Register

31	30	29	28	27	26	25	24
RESERVED							
R/W-X							
23	22	21	20	19	18	17	16
RESERVED							
R/W-X							
15	14	13	12	11	10	9	8
RESERVED							
R/W-X							
7	6	5	4	3	2	1	0
RESERVED	clk_disable			div_factor			
R/W-X	R/W-0h			R/W-3h			

Table 6-359. DSP_DFT_DIV_CTRL Register Field Descriptions

Bit	Field	Type	Reset	Description
31-7	RESERVED	R/W	X	
6-4	clk_disable	R/W	0h	DSP DFT Control for clock_disable. Multibit implementation. Write 0x0 to enable Write 0x7 to diable
3-0	div_factor	R/W	3h	DSP DFT Control for div factor

Copyright © 2025 Texas Instruments Incorporated

6.2.4.66 DSS_DSP_L2_PD_CTRL Register (Offset = 114h) [reset = X]

DSS_DSP_L2_PD_CTRL is shown in Figure 6-356 and described in Table 6-360.

Return to the Summary Table.

Figure 6-356. DSS_DSP_L2_PD_CTRL Register

31	30	29	28	27	26	25	24
RESERVED							
R/W-X							
23	22	21	20	19	18	17	16
RESERVED							
R/W-X							
15	14	13	12	11	10	9	8
RESERVED						agoodin	
R/W-X						R/W-7h	
7	6	5	4	3	2	1	0
RESERVED	aonin			RESERVED		iso	
R/W-X	R/W-7h			R/W-X		R/W-0h	

Table 6-360. DSS_DSP_L2_PD_CTRL Register Field Descriptions

Bit	Field	Type	Reset	Description
31-11	RESERVED	R/W	X	
10-8	agoodin	R/W	7h	SW Control for <IP>_PD_CTRL Memory Array Power up CRTL1
7	RESERVED	R/W	X	
6-4	aonin	R/W	7h	SW Control for <IP>_PD_CTRL Memory Array Power up CRTL0
3	RESERVED	R/W	X	
2-0	iso	R/W	0h	SW Control for <IP>_PD_CTRL Isolation

Copyright © 2025 Texas Instruments Incorporated

6.2.4.67 DSS_L3_BANKA0_PD_CTRL Register (Offset = 118h) [reset = X]

DSS_L3_BANKA0_PD_CTRL is shown in Figure 6-357 and described in Table 6-361.

Return to the Summary Table.

Figure 6-357. DSS_L3_BANKA0_PD_CTRL Register

31	30	29	28	27	26	25	24
RESERVED							
R/W-X							
23	22	21	20	19	18	17	16
RESERVED							
R/W-X							
15	14	13	12	11	10	9	8
RESERVED						agoodin	
R/W-X						R/W-7h	
7	6	5	4	3	2	1	0
RESERVED	aonin			RESERVED		iso	
R/W-X	R/W-7h			R/W-X		R/W-0h	

Table 6-361. DSS_L3_BANKA0_PD_CTRL Register Field Descriptions

Bit	Field	Type	Reset	Description
31-11	RESERVED	R/W	X	
10-8	agoodin	R/W	7h	SW Control for <IP>_PD_CTRL Memory Array Power up CRTL1
7	RESERVED	R/W	X	
6-4	aonin	R/W	7h	SW Control for <IP>_PD_CTRL Memory Array Power up CRTL0
3	RESERVED	R/W	X	
2-0	iso	R/W	0h	SW Control for <IP>_PD_CTRL Isolation

Copyright © 2025 Texas Instruments Incorporated

6.2.4.68 DSS_L3_BANKA1_PD_CTRL Register (Offset = 11Ch) [reset = X]

DSS_L3_BANKA1_PD_CTRL is shown in Figure 6-358 and described in Table 6-362.

Return to the Summary Table.

Figure 6-358. DSS_L3_BANKA1_PD_CTRL Register

31	30	29	28	27	26	25	24
RESERVED							
R/W-X							
23	22	21	20	19	18	17	16
RESERVED							
R/W-X							
15	14	13	12	11	10	9	8
RESERVED						agoodin	
R/W-X						R/W-7h	
7	6	5	4	3	2	1	0
RESERVED	aonin			RESERVED		iso	
R/W-X	R/W-7h			R/W-X		R/W-0h	

Table 6-362. DSS_L3_BANKA1_PD_CTRL Register Field Descriptions

Bit	Field	Type	Reset	Description
31-11	RESERVED	R/W	X	
10-8	agoodin	R/W	7h	SW Control for <IP>_PD_CTRL Memory Array Power up CRTL1
7	RESERVED	R/W	X	
6-4	aonin	R/W	7h	SW Control for <IP>_PD_CTRL Memory Array Power up CRTL0
3	RESERVED	R/W	X	
2-0	iso	R/W	0h	SW Control for <IP>_PD_CTRL Isolation

Copyright © 2025 Texas Instruments Incorporated

6.2.4.69 DSS_L3_BANKA2_PD_CTRL Register (Offset = 120h) [reset = X]

DSS_L3_BANKA2_PD_CTRL is shown in Figure 6-359 and described in Table 6-363.

Return to the Summary Table.

Figure 6-359. DSS_L3_BANKA2_PD_CTRL Register

31	30	29	28	27	26	25	24
RESERVED							
R/W-X							
23	22	21	20	19	18	17	16
RESERVED							
R/W-X							
15	14	13	12	11	10	9	8
RESERVED						agoodin	
R/W-X						R/W-7h	
7	6	5	4	3	2	1	0
RESERVED	aonin			RESERVED		iso	
R/W-X	R/W-7h			R/W-X		R/W-0h	

Table 6-363. DSS_L3_BANKA2_PD_CTRL Register Field Descriptions

Bit	Field	Type	Reset	Description
31-11	RESERVED	R/W	X	
10-8	agoodin	R/W	7h	SW Control for <IP>_PD_CTRL Memory Array Power up CRTL1
7	RESERVED	R/W	X	
6-4	aonin	R/W	7h	SW Control for <IP>_PD_CTRL Memory Array Power up CRTL0
3	RESERVED	R/W	X	
2-0	iso	R/W	0h	SW Control for <IP>_PD_CTRL Isolation

Copyright © 2025 Texas Instruments Incorporated

6.2.4.70 DSS_L3_BANKA3_PD_CTRL Register (Offset = 124h) [reset = X]

DSS_L3_BANKA3_PD_CTRL is shown in Figure 6-360 and described in Table 6-364.

Return to the Summary Table.

Figure 6-360. DSS_L3_BANKA3_PD_CTRL Register

31	30	29	28	27	26	25	24
RESERVED							
R/W-X							
23	22	21	20	19	18	17	16
RESERVED							
R/W-X							
15	14	13	12	11	10	9	8
RESERVED						agoodin	
R/W-X						R/W-7h	
7	6	5	4	3	2	1	0
RESERVED	aonin			RESERVED		iso	
R/W-X	R/W-7h			R/W-X		R/W-0h	

Table 6-364. DSS_L3_BANKA3_PD_CTRL Register Field Descriptions

Bit	Field	Type	Reset	Description
31-11	RESERVED	R/W	X	
10-8	agoodin	R/W	7h	SW Control for <IP>_PD_CTRL Memory Array Power up CRTL1
7	RESERVED	R/W	X	
6-4	aonin	R/W	7h	SW Control for <IP>_PD_CTRL Memory Array Power up CRTL0
3	RESERVED	R/W	X	
2-0	iso	R/W	0h	SW Control for <IP>_PD_CTRL Isolation

Copyright © 2025 Texas Instruments Incorporated

6.2.4.71 DSS_L3_BANKB0_PD_CTRL Register (Offset = 128h) [reset = X]

DSS_L3_BANKB0_PD_CTRL is shown in Figure 6-361 and described in Table 6-365.

Return to the Summary Table.

Figure 6-361. DSS_L3_BANKB0_PD_CTRL Register

31	30	29	28	27	26	25	24
RESERVED							
R/W-X							
23	22	21	20	19	18	17	16
RESERVED							
R/W-X							
15	14	13	12	11	10	9	8
RESERVED						agoodin	
R/W-X						R/W-7h	
7	6	5	4	3	2	1	0
RESERVED	aonin			RESERVED		iso	
R/W-X	R/W-7h			R/W-X		R/W-0h	

Table 6-365. DSS_L3_BANKB0_PD_CTRL Register Field Descriptions

Bit	Field	Type	Reset	Description
31-11	RESERVED	R/W	X	
10-8	agoodin	R/W	7h	SW Control for <IP>_PD_CTRL Memory Array Power up CRTL1
7	RESERVED	R/W	X	
6-4	aonin	R/W	7h	SW Control for <IP>_PD_CTRL Memory Array Power up CRTL0
3	RESERVED	R/W	X	
2-0	iso	R/W	0h	SW Control for <IP>_PD_CTRL Isolation

Copyright © 2025 Texas Instruments Incorporated

6.2.4.72 DSS_L3_BANKB1_PD_CTRL Register (Offset = 12Ch) [reset = X]

DSS_L3_BANKB1_PD_CTRL is shown in Figure 6-362 and described in Table 6-366.

Return to the Summary Table.

Figure 6-362. DSS_L3_BANKB1_PD_CTRL Register

31	30	29	28	27	26	25	24
RESERVED							
R/W-X							
23	22	21	20	19	18	17	16
RESERVED							
R/W-X							
15	14	13	12	11	10	9	8
RESERVED						agoodin	
R/W-X						R/W-7h	
7	6	5	4	3	2	1	0
RESERVED	aonin			RESERVED		iso	
R/W-X	R/W-7h			R/W-X		R/W-0h	

Table 6-366. DSS_L3_BANKB1_PD_CTRL Register Field Descriptions

Bit	Field	Type	Reset	Description
31-11	RESERVED	R/W	X	
10-8	agoodin	R/W	7h	SW Control for <IP>_PD_CTRL Memory Array Power up CRTL1
7	RESERVED	R/W	X	
6-4	aonin	R/W	7h	SW Control for <IP>_PD_CTRL Memory Array Power up CRTL0
3	RESERVED	R/W	X	
2-0	iso	R/W	0h	SW Control for <IP>_PD_CTRL Isolation

Copyright © 2025 Texas Instruments Incorporated

6.2.4.73 DSS_L3_BANKB2_PD_CTRL Register (Offset = 130h) [reset = X]

DSS_L3_BANKB2_PD_CTRL is shown in Figure 6-363 and described in Table 6-367.

Return to the Summary Table.

Figure 6-363. DSS_L3_BANKB2_PD_CTRL Register

31	30	29	28	27	26	25	24
RESERVED							
R/W-X							
23	22	21	20	19	18	17	16
RESERVED							
R/W-X							
15	14	13	12	11	10	9	8
RESERVED						agoodin	
R/W-X						R/W-7h	
7	6	5	4	3	2	1	0
RESERVED	aonin			RESERVED		iso	
R/W-X	R/W-7h			R/W-X		R/W-0h	

Table 6-367. DSS_L3_BANKB2_PD_CTRL Register Field Descriptions

Bit	Field	Type	Reset	Description
31-11	RESERVED	R/W	X	
10-8	agoodin	R/W	7h	SW Control for <IP>_PD_CTRL Memory Array Power up CRTL1
7	RESERVED	R/W	X	
6-4	aonin	R/W	7h	SW Control for <IP>_PD_CTRL Memory Array Power up CRTL0
3	RESERVED	R/W	X	
2-0	iso	R/W	0h	SW Control for <IP>_PD_CTRL Isolation

Copyright © 2025 Texas Instruments Incorporated

6.2.4.74 DSS_L3_BANKB3_PD_CTRL Register (Offset = 134h) [reset = X]

DSS_L3_BANKB3_PD_CTRL is shown in Figure 6-364 and described in Table 6-368.

Return to the Summary Table.

Figure 6-364. DSS_L3_BANKB3_PD_CTRL Register

31	30	29	28	27	26	25	24
RESERVED							
R/W-X							
23	22	21	20	19	18	17	16
RESERVED							
R/W-X							
15	14	13	12	11	10	9	8
RESERVED						agoodin	
R/W-X						R/W-7h	
7	6	5	4	3	2	1	0
RESERVED	aonin			RESERVED		iso	
R/W-X	R/W-7h			R/W-X		R/W-0h	

Table 6-368. DSS_L3_BANKB3_PD_CTRL Register Field Descriptions

Bit	Field	Type	Reset	Description
31-11	RESERVED	R/W	X	
10-8	agoodin	R/W	7h	SW Control for <IP>_PD_CTRL Memory Array Power up CRTL1
7	RESERVED	R/W	X	
6-4	aonin	R/W	7h	SW Control for <IP>_PD_CTRL Memory Array Power up CRTL0
3	RESERVED	R/W	X	
2-0	iso	R/W	0h	SW Control for <IP>_PD_CTRL Isolation

Copyright © 2025 Texas Instruments Incorporated

6.2.4.75 DSS_L3_BANKC0_PD_CTRL Register (Offset = 138h) [reset = X]

DSS_L3_BANKC0_PD_CTRL is shown in Figure 6-365 and described in Table 6-369.

Return to the Summary Table.

Figure 6-365. DSS_L3_BANKC0_PD_CTRL Register

31	30	29	28	27	26	25	24
RESERVED							
R/W-X							
23	22	21	20	19	18	17	16
RESERVED							
R/W-X							
15	14	13	12	11	10	9	8
RESERVED						agoodin	
R/W-X						R/W-7h	
7	6	5	4	3	2	1	0
RESERVED	aonin			RESERVED		iso	
R/W-X	R/W-7h			R/W-X		R/W-0h	

Table 6-369. DSS_L3_BANKC0_PD_CTRL Register Field Descriptions

Bit	Field	Type	Reset	Description
31-11	RESERVED	R/W	X	
10-8	agoodin	R/W	7h	SW Control for <IP>_PD_CTRL Memory Array Power up CRTL1
7	RESERVED	R/W	X	
6-4	aonin	R/W	7h	SW Control for <IP>_PD_CTRL Memory Array Power up CRTL0
3	RESERVED	R/W	X	
2-0	iso	R/W	0h	SW Control for <IP>_PD_CTRL Isolation

Copyright © 2025 Texas Instruments Incorporated

6.2.4.76 DSS_L3_BANKC1_PD_CTRL Register (Offset = 13Ch) [reset = X]

DSS_L3_BANKC1_PD_CTRL is shown in Figure 6-366 and described in Table 6-370.

Return to the Summary Table.

Figure 6-366. DSS_L3_BANKC1_PD_CTRL Register

31	30	29	28	27	26	25	24
RESERVED							
R/W-X							
23	22	21	20	19	18	17	16
RESERVED							
R/W-X							
15	14	13	12	11	10	9	8
RESERVED						agoodin	
R/W-X						R/W-7h	
7	6	5	4	3	2	1	0
RESERVED	aonin			RESERVED		iso	
R/W-X	R/W-7h			R/W-X		R/W-0h	

Table 6-370. DSS_L3_BANKC1_PD_CTRL Register Field Descriptions

Bit	Field	Type	Reset	Description
31-11	RESERVED	R/W	X	
10-8	agoodin	R/W	7h	SW Control for <IP>_PD_CTRL Memory Array Power up CRTL1
7	RESERVED	R/W	X	
6-4	aonin	R/W	7h	SW Control for <IP>_PD_CTRL Memory Array Power up CRTL0
3	RESERVED	R/W	X	
2-0	iso	R/W	0h	SW Control for <IP>_PD_CTRL Isolation

Copyright © 2025 Texas Instruments Incorporated

6.2.4.77 DSS_L3_BANKC2_PD_CTRL Register (Offset = 140h) [reset = X]

DSS_L3_BANKC2_PD_CTRL is shown in Figure 6-367 and described in Table 6-371.

Return to the Summary Table.

Figure 6-367. DSS_L3_BANKC2_PD_CTRL Register

31	30	29	28	27	26	25	24
RESERVED							
R/W-X							
23	22	21	20	19	18	17	16
RESERVED							
R/W-X							
15	14	13	12	11	10	9	8
RESERVED						agoodin	
R/W-X						R/W-7h	
7	6	5	4	3	2	1	0
RESERVED	aonin			RESERVED		iso	
R/W-X	R/W-7h			R/W-X		R/W-0h	

Table 6-371. DSS_L3_BANKC2_PD_CTRL Register Field Descriptions

Bit	Field	Type	Reset	Description
31-11	RESERVED	R/W	X	
10-8	agoodin	R/W	7h	SW Control for <IP>_PD_CTRL Memory Array Power up CRTL1
7	RESERVED	R/W	X	
6-4	aonin	R/W	7h	SW Control for <IP>_PD_CTRL Memory Array Power up CRTL0
3	RESERVED	R/W	X	
2-0	iso	R/W	0h	SW Control for <IP>_PD_CTRL Isolation

Copyright © 2025 Texas Instruments Incorporated

6.2.4.78 DSS_L3_BANKC3_PD_CTRL Register (Offset = 144h) [reset = X]

DSS_L3_BANKC3_PD_CTRL is shown in Figure 6-368 and described in Table 6-372.

Return to the Summary Table.

Figure 6-368. DSS_L3_BANKC3_PD_CTRL Register

31	30	29	28	27	26	25	24
RESERVED							
R/W-X							
23	22	21	20	19	18	17	16
RESERVED							
R/W-X							
15	14	13	12	11	10	9	8
RESERVED						agoodin	
R/W-X						R/W-7h	
7	6	5	4	3	2	1	0
RESERVED	aonin			RESERVED		iso	
R/W-X	R/W-7h			R/W-X		R/W-0h	

Table 6-372. DSS_L3_BANKC3_PD_CTRL Register Field Descriptions

Bit	Field	Type	Reset	Description
31-11	RESERVED	R/W	X	
10-8	agoodin	R/W	7h	SW Control for <IP>_PD_CTRL Memory Array Power up CRTL1
7	RESERVED	R/W	X	
6-4	aonin	R/W	7h	SW Control for <IP>_PD_CTRL Memory Array Power up CRTL0
3	RESERVED	R/W	X	
2-0	iso	R/W	0h	SW Control for <IP>_PD_CTRL Isolation

Copyright © 2025 Texas Instruments Incorporated

6.2.4.79 DSS_L3_BANKD0_PD_CTRL Register (Offset = 148h) [reset = X]

DSS_L3_BANKD0_PD_CTRL is shown in Figure 6-369 and described in Table 6-373.

Return to the Summary Table.

Figure 6-369. DSS_L3_BANKD0_PD_CTRL Register

31	30	29	28	27	26	25	24
RESERVED							
R/W-X							
23	22	21	20	19	18	17	16
RESERVED							
R/W-X							
15	14	13	12	11	10	9	8
RESERVED						agoodin	
R/W-X						R/W-7h	
7	6	5	4	3	2	1	0
RESERVED	aonin			RESERVED		iso	
R/W-X	R/W-7h			R/W-X		R/W-0h	

Table 6-373. DSS_L3_BANKD0_PD_CTRL Register Field Descriptions

Bit	Field	Type	Reset	Description
31-11	RESERVED	R/W	X	
10-8	agoodin	R/W	7h	SW Control for <IP>_PD_CTRL Memory Array Power up CRTL1
7	RESERVED	R/W	X	
6-4	aonin	R/W	7h	SW Control for <IP>_PD_CTRL Memory Array Power up CRTL0
3	RESERVED	R/W	X	
2-0	iso	R/W	0h	SW Control for <IP>_PD_CTRL Isolation

Copyright © 2025 Texas Instruments Incorporated

6.2.4.80 DSS_L3_BANKD1_PD_CTRL Register (Offset = 14Ch) [reset = X]

DSS_L3_BANKD1_PD_CTRL is shown in Figure 6-370 and described in Table 6-374.

Return to the Summary Table.

Figure 6-370. DSS_L3_BANKD1_PD_CTRL Register

31	30	29	28	27	26	25	24
RESERVED							
R/W-X							
23	22	21	20	19	18	17	16
RESERVED							
R/W-X							
15	14	13	12	11	10	9	8
RESERVED						agoodin	
R/W-X						R/W-7h	
7	6	5	4	3	2	1	0
RESERVED	aonin			RESERVED		iso	
R/W-X	R/W-7h			R/W-X		R/W-0h	

Table 6-374. DSS_L3_BANKD1_PD_CTRL Register Field Descriptions

Bit	Field	Type	Reset	Description
31-11	RESERVED	R/W	X	
10-8	agoodin	R/W	7h	SW Control for <IP>_PD_CTRL Memory Array Power up CRTL1
7	RESERVED	R/W	X	
6-4	aonin	R/W	7h	SW Control for <IP>_PD_CTRL Memory Array Power up CRTL0
3	RESERVED	R/W	X	
2-0	iso	R/W	0h	SW Control for <IP>_PD_CTRL Isolation

Copyright © 2025 Texas Instruments Incorporated

6.2.4.81 DSS_L3_BANKD2_PD_CTRL Register (Offset = 150h) [reset = X]

DSS_L3_BANKD2_PD_CTRL is shown in Figure 6-371 and described in Table 6-375.

Return to the Summary Table.

Figure 6-371. DSS_L3_BANKD2_PD_CTRL Register

31	30	29	28	27	26	25	24
RESERVED							
R/W-X							
23	22	21	20	19	18	17	16
RESERVED							
R/W-X							
15	14	13	12	11	10	9	8
RESERVED						agoodin	
R/W-X						R/W-7h	
7	6	5	4	3	2	1	0
RESERVED	aonin			RESERVED		iso	
R/W-X	R/W-7h			R/W-X		R/W-0h	

Table 6-375. DSS_L3_BANKD2_PD_CTRL Register Field Descriptions

Bit	Field	Type	Reset	Description
31-11	RESERVED	R/W	X	
10-8	agoodin	R/W	7h	SW Control for <IP>_PD_CTRL Memory Array Power up CRTL1
7	RESERVED	R/W	X	
6-4	aonin	R/W	7h	SW Control for <IP>_PD_CTRL Memory Array Power up CRTL0
3	RESERVED	R/W	X	
2-0	iso	R/W	0h	SW Control for <IP>_PD_CTRL Isolation

Copyright © 2025 Texas Instruments Incorporated

6.2.4.82 DSS_HWA_PD_CTRL Register (Offset = 158h) [reset = X]

DSS_HWA_PD_CTRL is shown in Figure 6-372 and described in Table 6-376.

Return to the Summary Table.

Figure 6-372. DSS_HWA_PD_CTRL Register

31	30	29	28	27	26	25	24
RESERVED							
R/W-X							
23	22	21	20	19	18	17	16
RESERVED						pgoodin	
R/W-X						R/W-7h	
15	14	13	12	11	10	9	8
RESERVED	ponin			RESERVED		agoodin	
R/W-X	R/W-7h			R/W-X		R/W-7h	
7	6	5	4	3	2	1	0
RESERVED	aonin			RESERVED		iso	
R/W-X	R/W-7h			R/W-X		R/W-0h	

Table 6-376. DSS_HWA_PD_CTRL Register Field Descriptions

Bit	Field	Type	Reset	Description
31-19	RESERVED	R/W	X	
18-16	pgoodin	R/W	7h	SW Control for <IP>_PD_CTRL Power up CRTL1
15	RESERVED	R/W	X	
14-12	ponin	R/W	7h	SW Control for <IP>_PD_CTRL Power up CRTL0
11	RESERVED	R/W	X	
10-8	agoodin	R/W	7h	SW Control for <IP>_PD_CTRL Memory Array Power up CRTL1
7	RESERVED	R/W	X	
6-4	aonin	R/W	7h	SW Control for <IP>_PD_CTRL Memory Array Power up CRTL0
3	RESERVED	R/W	X	
2-0	iso	R/W	0h	SW Control for <IP>_PD_CTRL Isolation

Copyright © 2025 Texas Instruments Incorporated

6.2.4.83 DSS_DSP_L2_PD_STATUS Register (Offset = 15Ch) [reset = X]

DSS_DSP_L2_PD_STATUS is shown in Figure 6-373 and described in Table 6-377.

Return to the Summary Table.

Figure 6-373. DSS_DSP_L2_PD_STATUS Register

31	30	29	28	27	26	25	24
RESERVED							
R-X							
23	22	21	20	19	18	17	16
RESERVED							
R-X							
15	14	13	12	11	10	9	8
RESERVED							
R-X							
7	6	5	4	3	2	1	0
RESERVED						agoodout	aonout
R-X						R-1h	R-1h

Table 6-377. DSS_DSP_L2_PD_STATUS Register Field Descriptions

Bit	Field	Type	Reset	Description
31-2	RESERVED	R	X	
1	agoodout	R	1h	Status for <IP>_PD_CTRL Memory Array Power up CRTL1
0	aonout	R	1h	Status for <IP>_PD_CTRL Memory Array Power up CRTL0

Copyright © 2025 Texas Instruments Incorporated

6.2.4.84 DSS_L3_BANKA0_PD_STATUS Register (Offset = 160h) [reset = X]

DSS_L3_BANKA0_PD_STATUS is shown in Figure 6-374 and described in Table 6-378.

Return to the Summary Table.

Figure 6-374. DSS_L3_BANKA0_PD_STATUS Register

31	30	29	28	27	26	25	24
RESERVED							
R-X							
23	22	21	20	19	18	17	16
RESERVED							
R-X							
15	14	13	12	11	10	9	8
RESERVED							
R-X							
7	6	5	4	3	2	1	0
RESERVED				agoodin	aonin	agoodout	aonout
R-X				R-1h	R-1h	R-1h	R-1h

Table 6-378. DSS_L3_BANKA0_PD_STATUS Register Field Descriptions

Bit	Field	Type	Reset	Description
31-4	RESERVED	R	X	
3	agoodin	R	1h	Status for sticky control <IP>_PD_CTRL Memory Array Power up CRTL1
2	aonin	R	1h	Status for sticky control <IP>_PD_CTRL Memory Array Power up CRTL0
1	agoodout	R	1h	Status for <IP>_PD_CTRL Memory Array Power up CRTL1
0	aonout	R	1h	Status for <IP>_PD_CTRL Memory Array Power up CRTL0

Copyright © 2025 Texas Instruments Incorporated

6.2.4.85 DSS_L3_BANKA1_PD_STATUS Register (Offset = 164h) [reset = X]

DSS_L3_BANKA1_PD_STATUS is shown in Figure 6-375 and described in Table 6-379.

Return to the Summary Table.

Figure 6-375. DSS_L3_BANKA1_PD_STATUS Register

31	30	29	28	27	26	25	24
RESERVED							
R-X							
23	22	21	20	19	18	17	16
RESERVED							
R-X							
15	14	13	12	11	10	9	8
RESERVED							
R-X							
7	6	5	4	3	2	1	0
RESERVED				agoodin	aonin	agoodout	aonout
R-X				R-1h	R-1h	R-1h	R-1h

Table 6-379. DSS_L3_BANKA1_PD_STATUS Register Field Descriptions

Bit	Field	Type	Reset	Description
31-4	RESERVED	R	X	
3	agoodin	R	1h	Status for sticky control <IP>_PD_CTRL Memory Array Power up CRTL1
2	aonin	R	1h	Status for sticky control <IP>_PD_CTRL Memory Array Power up CRTL0
1	agoodout	R	1h	Status for <IP>_PD_CTRL Memory Array Power up CRTL1
0	aonout	R	1h	Status for <IP>_PD_CTRL Memory Array Power up CRTL0

Copyright © 2025 Texas Instruments Incorporated

6.2.4.86 DSS_L3_BANKA2_PD_STATUS Register (Offset = 168h) [reset = X]

DSS_L3_BANKA2_PD_STATUS is shown in Figure 6-376 and described in Table 6-380.

Return to the Summary Table.

Figure 6-376. DSS_L3_BANKA2_PD_STATUS Register

31	30	29	28	27	26	25	24
RESERVED							
R-X							
23	22	21	20	19	18	17	16
RESERVED							
R-X							
15	14	13	12	11	10	9	8
RESERVED							
R-X							
7	6	5	4	3	2	1	0
RESERVED				agoodin	aonin	agoodout	aonout
R-X				R-1h	R-1h	R-1h	R-1h

Table 6-380. DSS_L3_BANKA2_PD_STATUS Register Field Descriptions

Bit	Field	Type	Reset	Description
31-4	RESERVED	R	X	
3	agoodin	R	1h	Status for sticky control <IP>_PD_CTRL Memory Array Power up CRTL1
2	aonin	R	1h	Status for sticky control <IP>_PD_CTRL Memory Array Power up CRTL0
1	agoodout	R	1h	Status for <IP>_PD_CTRL Memory Array Power up CRTL1
0	aonout	R	1h	Status for <IP>_PD_CTRL Memory Array Power up CRTL0

Copyright © 2025 Texas Instruments Incorporated

6.2.4.87 DSS_L3_BANKA3_PD_STATUS Register (Offset = 16Ch) [reset = X]

DSS_L3_BANKA3_PD_STATUS is shown in Figure 6-377 and described in Table 6-381.

Return to the Summary Table.

Figure 6-377. DSS_L3_BANKA3_PD_STATUS Register

31	30	29	28	27	26	25	24
RESERVED							
R-X							
23	22	21	20	19	18	17	16
RESERVED							
R-X							
15	14	13	12	11	10	9	8
RESERVED							
R-X							
7	6	5	4	3	2	1	0
RESERVED				agoodin	aonin	agoodout	aonout
R-X				R-1h	R-1h	R-1h	R-1h

Table 6-381. DSS_L3_BANKA3_PD_STATUS Register Field Descriptions

Bit	Field	Type	Reset	Description
31-4	RESERVED	R	X	
3	agoodin	R	1h	Status for sticky control <IP>_PD_CTRL Memory Array Power up CRTL1
2	aonin	R	1h	Status for sticky control <IP>_PD_CTRL Memory Array Power up CRTL0
1	agoodout	R	1h	Status for <IP>_PD_CTRL Memory Array Power up CRTL1
0	aonout	R	1h	Status for <IP>_PD_CTRL Memory Array Power up CRTL0

Copyright © 2025 Texas Instruments Incorporated

6.2.4.88 DSS_L3_BANKB0_PD_STATUS Register (Offset = 170h) [reset = X]

DSS_L3_BANKB0_PD_STATUS is shown in Figure 6-378 and described in Table 6-382.

Return to the Summary Table.

Figure 6-378. DSS_L3_BANKB0_PD_STATUS Register

31	30	29	28	27	26	25	24
RESERVED							
R-X							
23	22	21	20	19	18	17	16
RESERVED							
R-X							
15	14	13	12	11	10	9	8
RESERVED							
R-X							
7	6	5	4	3	2	1	0
RESERVED				agoodin	aonin	agoodout	aonout
R-X				R-1h	R-1h	R-1h	R-1h

Table 6-382. DSS_L3_BANKB0_PD_STATUS Register Field Descriptions

Bit	Field	Type	Reset	Description
31-4	RESERVED	R	X	
3	agoodin	R	1h	Status for sticky control <IP>_PD_CTRL Memory Array Power up CRTL1
2	aonin	R	1h	Status for sticky control <IP>_PD_CTRL Memory Array Power up CRTL0
1	agoodout	R	1h	Status for <IP>_PD_CTRL Memory Array Power up CRTL1
0	aonout	R	1h	Status for <IP>_PD_CTRL Memory Array Power up CRTL0

Copyright © 2025 Texas Instruments Incorporated

6.2.4.89 DSS_L3_BANKB1_PD_STATUS Register (Offset = 174h) [reset = X]

DSS_L3_BANKB1_PD_STATUS is shown in Figure 6-379 and described in Table 6-383.

Return to the Summary Table.

Figure 6-379. DSS_L3_BANKB1_PD_STATUS Register

31	30	29	28	27	26	25	24
RESERVED							
R-X							
23	22	21	20	19	18	17	16
RESERVED							
R-X							
15	14	13	12	11	10	9	8
RESERVED							
R-X							
7	6	5	4	3	2	1	0
RESERVED				agoodin	aonin	agoodout	aonout
R-X				R-1h	R-1h	R-1h	R-1h

Table 6-383. DSS_L3_BANKB1_PD_STATUS Register Field Descriptions

Bit	Field	Type	Reset	Description
31-4	RESERVED	R	X	
3	agoodin	R	1h	Status for sticky control <IP>_PD_CTRL Memory Array Power up CRTL1
2	aonin	R	1h	Status for sticky control <IP>_PD_CTRL Memory Array Power up CRTL0
1	agoodout	R	1h	Status for <IP>_PD_CTRL Memory Array Power up CRTL1
0	aonout	R	1h	Status for <IP>_PD_CTRL Memory Array Power up CRTL0

Copyright © 2025 Texas Instruments Incorporated

6.2.4.90 DSS_L3_BANKB2_PD_STATUS Register (Offset = 178h) [reset = X]

DSS_L3_BANKB2_PD_STATUS is shown in Figure 6-380 and described in Table 6-384.

Return to the Summary Table.

Figure 6-380. DSS_L3_BANKB2_PD_STATUS Register

31	30	29	28	27	26	25	24
RESERVED							
R-X							
23	22	21	20	19	18	17	16
RESERVED							
R-X							
15	14	13	12	11	10	9	8
RESERVED							
R-X							
7	6	5	4	3	2	1	0
RESERVED				agoodin	aonin	agoodout	aonout
R-X				R-1h	R-1h	R-1h	R-1h

Table 6-384. DSS_L3_BANKB2_PD_STATUS Register Field Descriptions

Bit	Field	Type	Reset	Description
31-4	RESERVED	R	X	
3	agoodin	R	1h	Status for sticky control <IP>_PD_CTRL Memory Array Power up CRTL1
2	aonin	R	1h	Status for sticky control <IP>_PD_CTRL Memory Array Power up CRTL0
1	agoodout	R	1h	Status for <IP>_PD_CTRL Memory Array Power up CRTL1
0	aonout	R	1h	Status for <IP>_PD_CTRL Memory Array Power up CRTL0

Copyright © 2025 Texas Instruments Incorporated

6.2.4.91 DSS_L3_BANKB3_PD_STATUS Register (Offset = 17Ch) [reset = X]

DSS_L3_BANKB3_PD_STATUS is shown in Figure 6-381 and described in Table 6-385.

Return to the Summary Table.

Figure 6-381. DSS_L3_BANKB3_PD_STATUS Register

31	30	29	28	27	26	25	24
RESERVED							
R-X							
23	22	21	20	19	18	17	16
RESERVED							
R-X							
15	14	13	12	11	10	9	8
RESERVED							
R-X							
7	6	5	4	3	2	1	0
RESERVED				agoodin	aonin	agoodout	aonout
R-X				R-1h	R-1h	R-1h	R-1h

Table 6-385. DSS_L3_BANKB3_PD_STATUS Register Field Descriptions

Bit	Field	Type	Reset	Description
31-4	RESERVED	R	X	
3	agoodin	R	1h	Status for sticky control <IP>_PD_CTRL Memory Array Power up CRTL1
2	aonin	R	1h	Status for sticky control <IP>_PD_CTRL Memory Array Power up CRTL0
1	agoodout	R	1h	Status for <IP>_PD_CTRL Memory Array Power up CRTL1
0	aonout	R	1h	Status for <IP>_PD_CTRL Memory Array Power up CRTL0

Copyright © 2025 Texas Instruments Incorporated

6.2.4.92 DSS_L3_BANKC0_PD_STATUS Register (Offset = 180h) [reset = X]

DSS_L3_BANKC0_PD_STATUS is shown in Figure 6-382 and described in Table 6-386.

Return to the Summary Table.

Figure 6-382. DSS_L3_BANKC0_PD_STATUS Register

31	30	29	28	27	26	25	24
RESERVED							
R-X							
23	22	21	20	19	18	17	16
RESERVED							
R-X							
15	14	13	12	11	10	9	8
RESERVED							
R-X							
7	6	5	4	3	2	1	0
RESERVED				agoodin	aonin	agoodout	aonout
R-X				R-1h	R-1h	R-1h	R-1h

Table 6-386. DSS_L3_BANKC0_PD_STATUS Register Field Descriptions

Bit	Field	Type	Reset	Description
31-4	RESERVED	R	X	
3	agoodin	R	1h	Status for sticky control <IP>_PD_CTRL Memory Array Power up CRTL1
2	aonin	R	1h	Status for sticky control <IP>_PD_CTRL Memory Array Power up CRTL0
1	agoodout	R	1h	Status for <IP>_PD_CTRL Memory Array Power up CRTL1
0	aonout	R	1h	Status for <IP>_PD_CTRL Memory Array Power up CRTL0

Copyright © 2025 Texas Instruments Incorporated

6.2.4.93 DSS_L3_BANKC1_PD_STATUS Register (Offset = 184h) [reset = X]

DSS_L3_BANKC1_PD_STATUS is shown in Figure 6-383 and described in Table 6-387.

Return to the Summary Table.

Figure 6-383. DSS_L3_BANKC1_PD_STATUS Register

31	30	29	28	27	26	25	24
RESERVED							
R-X							
23	22	21	20	19	18	17	16
RESERVED							
R-X							
15	14	13	12	11	10	9	8
RESERVED							
R-X							
7	6	5	4	3	2	1	0
RESERVED				agoodin	aonin	agoodout	aonout
R-X				R-1h	R-1h	R-1h	R-1h

Table 6-387. DSS_L3_BANKC1_PD_STATUS Register Field Descriptions

Bit	Field	Type	Reset	Description
31-4	RESERVED	R	X	
3	agoodin	R	1h	Status for sticky control <IP>_PD_CTRL Memory Array Power up CRTL1
2	aonin	R	1h	Status for sticky control <IP>_PD_CTRL Memory Array Power up CRTL0
1	agoodout	R	1h	Status for <IP>_PD_CTRL Memory Array Power up CRTL1
0	aonout	R	1h	Status for <IP>_PD_CTRL Memory Array Power up CRTL0

Copyright © 2025 Texas Instruments Incorporated

6.2.4.94 DSS_L3_BANKC2_PD_STATUS Register (Offset = 188h) [reset = X]

DSS_L3_BANKC2_PD_STATUS is shown in Figure 6-384 and described in Table 6-388.

Return to the Summary Table.

Figure 6-384. DSS_L3_BANKC2_PD_STATUS Register

31	30	29	28	27	26	25	24
RESERVED							
R-X							
23	22	21	20	19	18	17	16
RESERVED							
R-X							
15	14	13	12	11	10	9	8
RESERVED							
R-X							
7	6	5	4	3	2	1	0
RESERVED				agoodin	aonin	agoodout	aonout
R-X				R-1h	R-1h	R-1h	R-1h

Table 6-388. DSS_L3_BANKC2_PD_STATUS Register Field Descriptions

Bit	Field	Type	Reset	Description
31-4	RESERVED	R	X	
3	agoodin	R	1h	Status for sticky control <IP>_PD_CTRL Memory Array Power up CRTL1
2	aonin	R	1h	Status for sticky control <IP>_PD_CTRL Memory Array Power up CRTL0
1	agoodout	R	1h	Status for <IP>_PD_CTRL Memory Array Power up CRTL1
0	aonout	R	1h	Status for <IP>_PD_CTRL Memory Array Power up CRTL0

Copyright © 2025 Texas Instruments Incorporated

6.2.4.95 DSS_L3_BANKC3_PD_STATUS Register (Offset = 18Ch) [reset = X]

DSS_L3_BANKC3_PD_STATUS is shown in Figure 6-385 and described in Table 6-389.

Return to the Summary Table.

Figure 6-385. DSS_L3_BANKC3_PD_STATUS Register

31	30	29	28	27	26	25	24
RESERVED							
R-X							
23	22	21	20	19	18	17	16
RESERVED							
R-X							
15	14	13	12	11	10	9	8
RESERVED							
R-X							
7	6	5	4	3	2	1	0
RESERVED				agoodin	aonin	agoodout	aonout
R-X				R-1h	R-1h	R-1h	R-1h

Table 6-389. DSS_L3_BANKC3_PD_STATUS Register Field Descriptions

Bit	Field	Type	Reset	Description
31-4	RESERVED	R	X	
3	agoodin	R	1h	Status for sticky control <IP>_PD_CTRL Memory Array Power up CRTL1
2	aonin	R	1h	Status for sticky control <IP>_PD_CTRL Memory Array Power up CRTL0
1	agoodout	R	1h	Status for <IP>_PD_CTRL Memory Array Power up CRTL1
0	aonout	R	1h	Status for <IP>_PD_CTRL Memory Array Power up CRTL0

Copyright © 2025 Texas Instruments Incorporated

6.2.4.96 DSS_L3_BANKD0_PD_STATUS Register (Offset = 190h) [reset = X]

DSS_L3_BANKD0_PD_STATUS is shown in Figure 6-386 and described in Table 6-390.

Return to the Summary Table.

Figure 6-386. DSS_L3_BANKD0_PD_STATUS Register

31	30	29	28	27	26	25	24
RESERVED							
R-X							
23	22	21	20	19	18	17	16
RESERVED							
R-X							
15	14	13	12	11	10	9	8
RESERVED							
R-X							
7	6	5	4	3	2	1	0
RESERVED				agoodin	aonin	agoodout	aonout
R-X				R-1h	R-1h	R-1h	R-1h

Table 6-390. DSS_L3_BANKD0_PD_STATUS Register Field Descriptions

Bit	Field	Type	Reset	Description
31-4	RESERVED	R	X	
3	agoodin	R	1h	Status for sticky control <IP>_PD_CTRL Memory Array Power up CRTL1
2	aonin	R	1h	Status for sticky control <IP>_PD_CTRL Memory Array Power up CRTL0
1	agoodout	R	1h	Status for <IP>_PD_CTRL Memory Array Power up CRTL1
0	aonout	R	1h	Status for <IP>_PD_CTRL Memory Array Power up CRTL0

Copyright © 2025 Texas Instruments Incorporated

6.2.4.97 DSS_L3_BANKD1_PD_STATUS Register (Offset = 194h) [reset = X]

DSS_L3_BANKD1_PD_STATUS is shown in Figure 6-387 and described in Table 6-391.

Return to the Summary Table.

Figure 6-387. DSS_L3_BANKD1_PD_STATUS Register

31	30	29	28	27	26	25	24
RESERVED							
R-X							
23	22	21	20	19	18	17	16
RESERVED							
R-X							
15	14	13	12	11	10	9	8
RESERVED							
R-X							
7	6	5	4	3	2	1	0
RESERVED				agoodin	aonin	agoodout	aonout
R-X				R-1h	R-1h	R-1h	R-1h

Table 6-391. DSS_L3_BANKD1_PD_STATUS Register Field Descriptions

Bit	Field	Type	Reset	Description
31-4	RESERVED	R	X	
3	agoodin	R	1h	Status for sticky control <IP>_PD_CTRL Memory Array Power up CRTL1
2	aonin	R	1h	Status for sticky control <IP>_PD_CTRL Memory Array Power up CRTL0
1	agoodout	R	1h	Status for <IP>_PD_CTRL Memory Array Power up CRTL1
0	aonout	R	1h	Status for <IP>_PD_CTRL Memory Array Power up CRTL0

Copyright © 2025 Texas Instruments Incorporated

6.2.4.98 DSS_L3_BANKD2_PD_STATUS Register (Offset = 198h) [reset = X]

DSS_L3_BANKD2_PD_STATUS is shown in Figure 6-388 and described in Table 6-392.

Return to the Summary Table.

Figure 6-388. DSS_L3_BANKD2_PD_STATUS Register

31	30	29	28	27	26	25	24
RESERVED							
R-X							
23	22	21	20	19	18	17	16
RESERVED							
R-X							
15	14	13	12	11	10	9	8
RESERVED							
R-X							
7	6	5	4	3	2	1	0
RESERVED				agoodin	aonin	agoodout	aonout
R-X				R-1h	R-1h	R-1h	R-1h

Table 6-392. DSS_L3_BANKD2_PD_STATUS Register Field Descriptions

Bit	Field	Type	Reset	Description
31-4	RESERVED	R	X	
3	agoodin	R	1h	Status for sticky control <IP>_PD_CTRL Memory Array Power up CRTL1
2	aonin	R	1h	Status for sticky control <IP>_PD_CTRL Memory Array Power up CRTL0
1	agoodout	R	1h	Status for <IP>_PD_CTRL Memory Array Power up CRTL1
0	aonout	R	1h	Status for <IP>_PD_CTRL Memory Array Power up CRTL0

Copyright © 2025 Texas Instruments Incorporated

6.2.4.99 DSS_HWA_PD_STATUS Register (Offset = 1A0h) [reset = X]

DSS_HWA_PD_STATUS is shown in Figure 6-389 and described in Table 6-393.

Return to the Summary Table.

Figure 6-389. DSS_HWA_PD_STATUS Register

31	30	29	28	27	26	25	24
RESERVED							
R-X							
23	22	21	20	19	18	17	16
RESERVED							
R-X							
15	14	13	12	11	10	9	8
RESERVED							
R-X							
7	6	5	4	3	2	1	0
RESERVED				pgoodout	ponout	agoodout	aonout
R-X				R-1h	R-1h	R-1h	R-1h

Table 6-393. DSS_HWA_PD_STATUS Register Field Descriptions

Bit	Field	Type	Reset	Description
31-4	RESERVED	R	X	
3	pgoodout	R	1h	Status for <IP>_PD_CTRL Power up CRTL1
2	ponout	R	1h	Status for <IP>_PD_CTRL Power up CRTL0
1	agoodout	R	1h	Status for <IP>_PD_CTRL Memory Array Power up CRTL1
0	aonout	R	1h	Status for <IP>_PD_CTRL Memory Array Power up CRTL0

Copyright © 2025 Texas Instruments Incorporated

6.2.4.100 DSS_DSP_TRCCLK_DIVRATIO Register (Offset = 1A4h) [reset = X]

DSS_DSP_TRCCLK_DIVRATIO is shown in Figure 6-390 and described in Table 6-394.

Return to the Summary Table.

Figure 6-390. DSS_DSP_TRCCLK_DIVRATIO Register

31	30	29	28	27	26	25	24	23	22	21	20	19	18	17	16
RESERVED															
R/W-X															
15	14	13	12	11	10	9	8	7	6	5	4	3	2	1	0
RESERVED												divratio			
R/W-X												R/W-3h			

Table 6-394. DSS_DSP_TRCCLK_DIVRATIO Register Field Descriptions

Bit	Field	Type	Reset	Description
31-4	RESERVED	R/W	X	
3-0	divratio	R/W	3h	DSP Trace Clock Divide Ratio

Copyright © 2025 Texas Instruments Incorporated

6.2.4.101 DSS_DSP_TCLK_DIVRATIO Register (Offset = 1A8h) [reset = X]

DSS_DSP_TCLK_DIVRATIO is shown in Figure 6-391 and described in Table 6-395.

Return to the Summary Table.

Figure 6-391. DSS_DSP_TCLK_DIVRATIO Register

31	30	29	28	27	26	25	24	23	22	21	20	19	18	17	16
RESERVED															
R/W-X															
15	14	13	12	11	10	9	8	7	6	5	4	3	2	1	0
RESERVED												divratio			
R/W-X												R/W-3h			

Table 6-395. DSS_DSP_TCLK_DIVRATIO Register Field Descriptions

Bit	Field	Type	Reset	Description
31-4	RESERVED	R/W	X	
3-0	divratio	R/W	3h	DSP TCLK Divide Ratio

Copyright © 2025 Texas Instruments Incorporated

6.2.4.102 DSS_DSP_DITHERED_CLK_CTRL Register (Offset = 1ACh) [reset = 0h]

DSS_DSP_DITHERED_CLK_CTRL is shown in Figure 6-392 and described in Table 6-396.

Return to the Summary Table.

Figure 6-392. DSS_DSP_DITHERED_CLK_CTRL Register

31	30	29	28	27	26	25	24
load	enable			seed			
R/W-0h	R/W-0h			R/W-0h			
23	22	21	20	19	18	17	16
seed							
R/W-0h							
15	14	13	12	11	10	9	8
seed							
R/W-0h							
7	6	5	4	3	2	1	0
seed							
R/W-0h							

Table 6-396. DSS_DSP_DITHERED_CLK_CTRL Register Field Descriptions

Bit	Field	Type	Reset	Description
31	load	R/W	0h	Write pulse bit field: DSP Dithered Clock LFSR Load
30-28	enable	R/W	0h	DSP Dithered Clock Enable. Write 3'b000 : Disabled Write 3'b111 : Enabled
27-0	seed	R/W	0h	DSP Dithered Clock LFSR Seed

Copyright © 2025 Texas Instruments Incorporated

6.2.4.103 DSS_L3_PD_CTRL_STICKYBIT Register (Offset = 1B0h) [reset = X]

DSS_L3_PD_CTRL_STICKYBIT is shown in Figure 6-393 and described in Table 6-397.

Return to the Summary Table.

Figure 6-393. DSS_L3_PD_CTRL_STICKYBIT Register

31	30	29	28	27	26	25	24	23	22	21	20	19	18	17	16	15	14	13	12	11	10	9	8	7	6	5	4	3	2	1	0
RESERVED																													set		
R/W-X																													R/W-0h		

Table 6-397. DSS_L3_PD_CTRL_STICKYBIT Register Field Descriptions

Bit	Field	Type	Reset	Description
31-3	RESERVED	R/W	X	
2-0	set	R/W	0h	Sticky bit for DSS L3 PD CTRL. Write 3'b111 to lock the configuration of DSS_L3_BANK*_PD_CTRL. Once this field is writen, there is no impact of changing the value of aonin and agoodin fields in DSS_L3_BANK*_PD_CTRL registers

Copyright © 2025 Texas Instruments Incorporated

6.2.4.104 DSP_PD_CTRL_MISC2 Register (Offset = 1B4h) [reset = 00100010h]

DSP_PD_CTRL_MISC2 is shown in Figure 6-394 and described in Table 6-398.

Return to the Summary Table.

Figure 6-394. DSP_PD_CTRL_MISC2 Register

31	30	29	28	27	26	25	24	23	22	21	20	19	18	17	16
pwrsm_agood_assertcnt															
R/W-10h															
15	14	13	12	11	10	9	8	7	6	5	4	3	2	1	0
pwrsm_pgood_assertcnt															
R/W-10h															

Table 6-398. DSP_PD_CTRL_MISC2 Register Field Descriptions

Bit	Field	Type	Reset	Description
31-16	pwrsm_agood_assertcnt	R/W	10h	Value of agood asertion delay
15-0	pwrsm_pgood_assertcnt	R/W	10h	Value of pgood asertion delay

Copyright © 2025 Texas Instruments Incorporated

6.2.4.105 DSP_PD_CTRL_MISC3 Register (Offset = 1B8h) [reset = X]

DSP_PD_CTRL_MISC3 is shown in Figure 6-395 and described in Table 6-399.

Return to the Summary Table.

Figure 6-395. DSP_PD_CTRL_MISC3 Register

31	30	29	28	27	26	25	24
RESERVED							
R/W-X							
23	22	21	20	19	18	17	16
RESERVED							lreset_req_gate
R/W-X							R/W-0h
15	14	13	12	11	10	9	8
pwrs_pd_waitcnt							
R/W-10h							
7	6	5	4	3	2	1	0
pwrs_pd_waitcnt							
R/W-10h							

Table 6-399. DSP_PD_CTRL_MISC3 Register Field Descriptions

Bit	Field	Type	Reset	Description
31-17	RESERVED	R/W	X	
16	lreset_req_gate	R/W	0h	Gate the lreset request from GEM. For debug purpose.
15-0	pwrs_pd_waitcnt	R/W	10h	Value of power down wait delay

Copyright © 2025 Texas Instruments Incorporated

6.2.4.106 DSP_PD_CTRL_OVERRIDE0 Register (Offset = 1BCh) [reset = X]

DSP_PD_CTRL_OVERRIDE0 is shown in Figure 6-396 and described in Table 6-400.

Return to the Summary Table.

Figure 6-396. DSP_PD_CTRL_OVERRIDE0 Register

31	30	29	28	27	26	25	24	23	22	21	20	19	18	17	16
RESERVED		state_bypass_val						bypass_val							
R/W-X		R/W-0h						R/W-0h							
15	14	13	12	11	10	9	8	7	6	5	4	3	2	1	0
bypass_val															
R/W-0h															

Table 6-400. DSP_PD_CTRL_OVERRIDE0 Register Field Descriptions

Bit	Field	Type	Reset	Description
31-30	RESERVED	R/W	X	
29-24	state_bypass_val	R/W	0h	DSS DSP power FSM state bypass control. For debug pupose.
23-0	bypass_val	R/W	0h	DSS DSP power FSM bypass control. For debug pupose.

Copyright © 2025 Texas Instruments Incorporated

6.2.4.107 DSP_PD_CTRL_OVERRIDE1 Register (Offset = 1C0h) [reset = X]

DSP_PD_CTRL_OVERRIDE1 is shown in Figure 6-397 and described in Table 6-401.

Return to the Summary Table.

Figure 6-397. DSP_PD_CTRL_OVERRIDE1 Register

31	30	29	28	27	26	25	24
RESERVED							state_bypass_en
R/W-X							R/W-0h
23	22	21	20	19	18	17	16
bypass_en							
R/W-0h							
15	14	13	12	11	10	9	8
bypass_en							
R/W-0h							
7	6	5	4	3	2	1	0
bypass_en							
R/W-0h							

Table 6-401. DSP_PD_CTRL_OVERRIDE1 Register Field Descriptions

Bit	Field	Type	Reset	Description
31-25	RESERVED	R/W	X	
24	state_bypass_en	R/W	0h	DSS DSP power FSM state bypass control enable.For debug pupose.
23-0	bypass_en	R/W	0h	DSS DSP power FSM bypass control enable.For debug pupose.

Copyright © 2025 Texas Instruments Incorporated

6.2.4.108 DSP_PD_CTRL_OVERRIDE2 Register (Offset = 1C4h) [reset = X]

DSP_PD_CTRL_OVERRIDE2 is shown in Figure 6-398 and described in Table 6-402.

Return to the Summary Table.

Figure 6-398. DSP_PD_CTRL_OVERRIDE2 Register

31	30	29	28	27	26	25	24
RESERVED							
R/W-X							
23	22	21	20	19	18	17	16
RESERVED							
R/W-X							
15	14	13	12	11	10	9	8
RESERVED							
R/W-X							
7	6	5	4	3	2	1	0
RESERVED					override_enable		
R/W-X					R/W-0h		

Table 6-402. DSP_PD_CTRL_OVERRIDE2 Register Field Descriptions

Bit	Field	Type	Reset	Description
31-3	RESERVED	R/W	X	
2-0	override_enable	R/W	0h	DSS DSP power FSM override enable .For debug pupose.

Copyright © 2025 Texas Instruments Incorporated

6.2.4.109 DSS_HWA_RST_CTRL Register (Offset = 1C8h) [reset = X]

DSS_HWA_RST_CTRL is shown in Figure 6-399 and described in Table 6-403.

Return to the Summary Table.

Figure 6-399. DSS_HWA_RST_CTRL Register

31	30	29	28	27	26	25	24	23	22	21	20	19	18	17	16
RESERVED															
R/W-X															
15	14	13	12	11	10	9	8	7	6	5	4	3	2	1	0
RESERVED													assert		
R/W-X													R/W-0h		

Table 6-403. DSS_HWA_RST_CTRL Register Field Descriptions

Bit	Field	Type	Reset	Description
31-3	RESERVED	R/W	X	
2-0	assert	R/W	0h	This register is for Debug Purposes only. Reset control for DSS HWA Data should be loaded as multibit. Write 3'b000: Reset is not asserted by SW. There could be another reset source which could reset the module. Write 3'b111 : Reset is asserted by SW

Copyright © 2025 Texas Instruments Incorporated

6.2.4.110 DSS_EDMA_RST_CTRL Register (Offset = 1D0h) [reset = X]

DSS_EDMA_RST_CTRL is shown in Figure 6-400 and described in Table 6-404.

Return to the Summary Table.

Figure 6-400. DSS_EDMA_RST_CTRL Register

31	30	29	28	27	26	25	24	23	22	21	20	19	18	17	16
RESERVED															
R/W-X															
15	14	13	12	11	10	9	8	7	6	5	4	3	2	1	0
RESERVED													assert		
R/W-X													R/W-0h		

Table 6-404. DSS_EDMA_RST_CTRL Register Field Descriptions

Bit	Field	Type	Reset	Description
31-3	RESERVED	R/W	X	
2-0	assert	R/W	0h	This register is for Debug Purposes only. Reset control for DSS TPCCB Data should be loaded as multibit. Write 3'b000: Reset is not asserted by SW. There could be another reset source which could reset the module. Write 3'b111 : Reset is asserted by SW

Copyright © 2025 Texas Instruments Incorporated

6.2.4.111 DSS_TPTCC_RST_CTRL Register (Offset = 1E0h) [reset = X]

DSS_TPTCC_RST_CTRL is shown in Figure 6-401 and described in Table 6-405.

Return to the Summary Table.

Figure 6-401. DSS_TPTCC_RST_CTRL Register

31	30	29	28	27	26	25	24
RESERVED							
R/W-X							
23	22	21	20	19	18	17	16
RESERVED	assert_tc5			RESERVED	assert_tc4		
R/W-X	R/W-0h			R/W-X	R/W-0h		
15	14	13	12	11	10	9	8
RESERVED	assert_tc3			RESERVED	assert_tc2		
R/W-X	R/W-0h			R/W-X	R/W-0h		
7	6	5	4	3	2	1	0
RESERVED	assert_tc1			RESERVED	assert_tc0		
R/W-X	R/W-0h			R/W-X	R/W-0h		

Table 6-405. DSS_TPTCC_RST_CTRL Register Field Descriptions

Bit	Field	Type	Reset	Description
31-23	RESERVED	R/W	X	
22-20	assert_tc5	R/W	0h	This register is for Debug Purposes only. Reset control for DSS TPTCC1 Data should be loaded as multibit. Write 3'b000: Reset is not asserted by SW. There could be another reset source which could reset the module. Write 3'b111 : Reset is asserted by SW
19	RESERVED	R/W	X	
18-16	assert_tc4	R/W	0h	This register is for Debug Purposes only. Reset control for DSS TPTCC0 Data should be loaded as multibit. Write 3'b000: Reset is not asserted by SW. There could be another reset source which could reset the module. Write 3'b111 : Reset is asserted by SW
15	RESERVED	R/W	X	
14-12	assert_tc3	R/W	0h	This register is for Debug Purposes only. Reset control for DSS TPTCC1 Data should be loaded as multibit. Write 3'b000: Reset is not asserted by SW. There could be another reset source which could reset the module. Write 3'b111 : Reset is asserted by SW
11	RESERVED	R/W	X	
10-8	assert_tc2	R/W	0h	This register is for Debug Purposes only. Reset control for DSS TPTCC0 Data should be loaded as multibit. Write 3'b000: Reset is not asserted by SW. There could be another reset source which could reset the module. Write 3'b111 : Reset is asserted by SW
7	RESERVED	R/W	X	
6-4	assert_tc1	R/W	0h	This register is for Debug Purposes only. Reset control for DSS TPTCC1 Data should be loaded as multibit. Write 3'b000: Reset is not asserted by SW. There could be another reset source which could reset the module. Write 3'b111 : Reset is asserted by SW
3	RESERVED	R/W	X	

Copyright © 2025 Texas Instruments Incorporated

Table 6-405. DSS_TPTCC_RST_CTRL Register Field Descriptions (continued)

Bit	Field	Type	Reset	Description
2-0	assert_tc0	R/W	0h	This register is for Debug Purposes only. Reset control for DSS TPTCC0 Data should be loaded as multibit. Write 3'b000: Reset is not asserted by SW. There could be another reset source which could reset the module. Write 3'b111 : Reset is asserted by SW

Copyright © 2025 Texas Instruments Incorporated

6.2.4.112 HW_SPARE_RW0 Register (Offset = FD0h) [reset = 0h]

HW_SPARE_RW0 is shown in Figure 6-402 and described in Table 6-406.

Return to the Summary Table.

Figure 6-402. HW_SPARE_RW0 Register

31	30	29	28	27	26	25	24	23	22	21	20	19	18	17	16	15	14	13	12	11	10	9	8	7	6	5	4	3	2	1	0
hw_spare_rw0																															
R/W-0h																															

Table 6-406. HW_SPARE_RW0 Register Field Descriptions

Bit	Field	Type	Reset	Description
31-0	hw_spare_rw0	R/W	0h	Reserved for HW R&D

Copyright © 2025 Texas Instruments Incorporated

6.2.4.113 HW_SPARE_RW1 Register (Offset = FD4h) [reset = 0h]

HW_SPARE_RW1 is shown in Figure 6-403 and described in Table 6-407.

Return to the Summary Table.

Figure 6-403. HW_SPARE_RW1 Register

31	30	29	28	27	26	25	24	23	22	21	20	19	18	17	16	15	14	13	12	11	10	9	8	7	6	5	4	3	2	1	0
hw_spare_rw1																															
R/W-0h																															

Table 6-407. HW_SPARE_RW1 Register Field Descriptions

Bit	Field	Type	Reset	Description
31-0	hw_spare_rw1	R/W	0h	Reserved for HW R&D

Copyright © 2025 Texas Instruments Incorporated

6.2.4.114 HW_SPARE_RW2 Register (Offset = FD8h) [reset = 0h]

HW_SPARE_RW2 is shown in Figure 6-404 and described in Table 6-408.

Return to the Summary Table.

Figure 6-404. HW_SPARE_RW2 Register

31	30	29	28	27	26	25	24	23	22	21	20	19	18	17	16	15	14	13	12	11	10	9	8	7	6	5	4	3	2	1	0
hw_spare_rw2																															
R/W-0h																															

Table 6-408. HW_SPARE_RW2 Register Field Descriptions

Bit	Field	Type	Reset	Description
31-0	hw_spare_rw2	R/W	0h	Reserved for HW R&D

Copyright © 2025 Texas Instruments Incorporated

6.2.4.115 HW_SPARE_RW3 Register (Offset = FDCh) [reset = 0h]

HW_SPARE_RW3 is shown in Figure 6-405 and described in Table 6-409.

Return to the Summary Table.

Figure 6-405. HW_SPARE_RW3 Register

31	30	29	28	27	26	25	24	23	22	21	20	19	18	17	16	15	14	13	12	11	10	9	8	7	6	5	4	3	2	1	0
hw_spare_rw3																															
R/W-0h																															

Table 6-409. HW_SPARE_RW3 Register Field Descriptions

Bit	Field	Type	Reset	Description
31-0	hw_spare_rw3	R/W	0h	Reserved for HW R&D

Copyright © 2025 Texas Instruments Incorporated

6.2.4.116 HW_SPARE_RO0 Register (Offset = FE0h) [reset = 0h]

HW_SPARE_RO0 is shown in Figure 6-406 and described in Table 6-410.

Return to the Summary Table.

Figure 6-406. HW_SPARE_RO0 Register

31	30	29	28	27	26	25	24	23	22	21	20	19	18	17	16	15	14	13	12	11	10	9	8	7	6	5	4	3	2	1	0
hw_spare_ro0																															
R-0h																															

Table 6-410. HW_SPARE_RO0 Register Field Descriptions

Bit	Field	Type	Reset	Description
31-0	hw_spare_ro0	R	0h	Reserved for HW R&D

Copyright © 2025 Texas Instruments Incorporated

6.2.4.117 HW_SPARE_RO1 Register (Offset = FE4h) [reset = 0h]

HW_SPARE_RO1 is shown in Figure 6-407 and described in Table 6-411.

Return to the Summary Table.

Figure 6-407. HW_SPARE_RO1 Register

31	30	29	28	27	26	25	24	23	22	21	20	19	18	17	16	15	14	13	12	11	10	9	8	7	6	5	4	3	2	1	0
hw_spare_ro1																															
R-0h																															

Table 6-411. HW_SPARE_RO1 Register Field Descriptions

Bit	Field	Type	Reset	Description
31-0	hw_spare_ro1	R	0h	Reserved for HW R&D

Copyright © 2025 Texas Instruments Incorporated

6.2.4.118 HW_SPARE_RO2 Register (Offset = FE8h) [reset = 0h]

HW_SPARE_RO2 is shown in Figure 6-408 and described in Table 6-412.

Return to the Summary Table.

Figure 6-408. HW_SPARE_RO2 Register

31	30	29	28	27	26	25	24	23	22	21	20	19	18	17	16	15	14	13	12	11	10	9	8	7	6	5	4	3	2	1	0
hw_spare_ro2																															
R-0h																															

Table 6-412. HW_SPARE_RO2 Register Field Descriptions

Bit	Field	Type	Reset	Description
31-0	hw_spare_ro2	R	0h	Reserved for HW R&D

Copyright © 2025 Texas Instruments Incorporated

6.2.4.119 HW_SPARE_RO3 Register (Offset = FECh) [reset = 0h]

HW_SPARE_RO3 is shown in Figure 6-409 and described in Table 6-413.

Return to the Summary Table.

Figure 6-409. HW_SPARE_RO3 Register

31	30	29	28	27	26	25	24	23	22	21	20	19	18	17	16	15	14	13	12	11	10	9	8	7	6	5	4	3	2	1	0
hw_spare_ro3																															
R-0h																															

Table 6-413. HW_SPARE_RO3 Register Field Descriptions

Bit	Field	Type	Reset	Description
31-0	hw_spare_ro3	R	0h	Reserved for HW R&D

Copyright © 2025 Texas Instruments Incorporated

6.2.4.120 HW_SPARE_WPH Register (Offset = FF0h) [reset = 0h]

HW_SPARE_WPH is shown in Figure 6-410 and described in Table 6-414.

Return to the Summary Table.

Figure 6-410. HW_SPARE_WPH Register

31	30	29	28	27	26	25	24	23	22	21	20	19	18	17	16	15	14	13	12	11	10	9	8	7	6	5	4	3	2	1	0
hw_spare_wph																															
R/W-0h																															

Table 6-414. HW_SPARE_WPH Register Field Descriptions

Bit	Field	Type	Reset	Description
31-0	hw_spare_wph	R/W	0h	Reserved for HW R&D

Copyright © 2025 Texas Instruments Incorporated

6.2.4.121 HW_SPARE_REC Register (Offset = FF4h) [reset = 0h]

HW_SPARE_REC is shown in Figure 6-411 and described in Table 6-415.

Return to the Summary Table.

Figure 6-411. HW_SPARE_REC Register

31	30	29	28	27	26	25	24
hw_spare_rec31	hw_spare_rec30	hw_spare_rec29	hw_spare_rec28	hw_spare_rec27	hw_spare_rec26	hw_spare_rec25	hw_spare_rec24
R/W-0h	R/W-0h	R/W-0h	R/W-0h	R/W-0h	R/W-0h	R/W-0h	R/W-0h
23	22	21	20	19	18	17	16
hw_spare_rec23	hw_spare_rec22	hw_spare_rec21	hw_spare_rec20	hw_spare_rec19	hw_spare_rec18	hw_spare_rec17	hw_spare_rec16
R/W-0h	R/W-0h	R/W-0h	R/W-0h	R/W-0h	R/W-0h	R/W-0h	R/W-0h
15	14	13	12	11	10	9	8
hw_spare_rec15	hw_spare_rec14	hw_spare_rec13	hw_spare_rec12	hw_spare_rec11	hw_spare_rec10	hw_spare_rec9	hw_spare_rec8
R/W-0h	R/W-0h	R/W-0h	R/W-0h	R/W-0h	R/W-0h	R/W-0h	R/W-0h
7	6	5	4	3	2	1	0
hw_spare_rec7	hw_spare_rec6	hw_spare_rec5	hw_spare_rec4	hw_spare_rec3	hw_spare_rec2	hw_spare_rec1	hw_spare_rec0
R/W-0h	R/W-0h	R/W-0h	R/W-0h	R/W-0h	R/W-0h	R/W-0h	R/W-0h

Table 6-415. HW_SPARE_REC Register Field Descriptions

Bit	Field	Type	Reset	Description
31	hw_spare_rec31	R/W	0h	Reserved for HW R&D
30	hw_spare_rec30	R/W	0h	Reserved for HW R&D
29	hw_spare_rec29	R/W	0h	Reserved for HW R&D
28	hw_spare_rec28	R/W	0h	Reserved for HW R&D
27	hw_spare_rec27	R/W	0h	Reserved for HW R&D
26	hw_spare_rec26	R/W	0h	Reserved for HW R&D
25	hw_spare_rec25	R/W	0h	Reserved for HW R&D
24	hw_spare_rec24	R/W	0h	Reserved for HW R&D
23	hw_spare_rec23	R/W	0h	Reserved for HW R&D
22	hw_spare_rec22	R/W	0h	Reserved for HW R&D
21	hw_spare_rec21	R/W	0h	Reserved for HW R&D
20	hw_spare_rec20	R/W	0h	Reserved for HW R&D
19	hw_spare_rec19	R/W	0h	Reserved for HW R&D
18	hw_spare_rec18	R/W	0h	Reserved for HW R&D
17	hw_spare_rec17	R/W	0h	Reserved for HW R&D
16	hw_spare_rec16	R/W	0h	Reserved for HW R&D
15	hw_spare_rec15	R/W	0h	Reserved for HW R&D
14	hw_spare_rec14	R/W	0h	Reserved for HW R&D
13	hw_spare_rec13	R/W	0h	Reserved for HW R&D
12	hw_spare_rec12	R/W	0h	Reserved for HW R&D
11	hw_spare_rec11	R/W	0h	Reserved for HW R&D

Copyright © 2025 Texas Instruments Incorporated

Table 6-415. HW_SPARE_REC Register Field Descriptions (continued)

Bit	Field	Type	Reset	Description
10	hw_spare_rec10	R/W	0h	Reserved for HW R&D
9	hw_spare_rec9	R/W	0h	Reserved for HW R&D
8	hw_spare_rec8	R/W	0h	Reserved for HW R&D
7	hw_spare_rec7	R/W	0h	Reserved for HW R&D
6	hw_spare_rec6	R/W	0h	Reserved for HW R&D
5	hw_spare_rec5	R/W	0h	Reserved for HW R&D
4	hw_spare_rec4	R/W	0h	Reserved for HW R&D
3	hw_spare_rec3	R/W	0h	Reserved for HW R&D
2	hw_spare_rec2	R/W	0h	Reserved for HW R&D
1	hw_spare_rec1	R/W	0h	Reserved for HW R&D
0	hw_spare_rec0	R/W	0h	Reserved for HW R&D

Copyright © 2025 Texas Instruments Incorporated

6.2.4.122 LOCK0_KICK0 Register (Offset = 1008h) [reset = 0h]

LOCK0_KICK0 is shown in Figure 6-412 and described in Table 6-416.

Return to the Summary Table.

- KICK0 component

Figure 6-412. LOCK0_KICK0 Register

31	30	29	28	27	26	25	24	23	22	21	20	19	18	17	16	15	14	13	12	11	10	9	8	7	6	5	4	3	2	1	0
LOCK0_kick0																															
R/W-0h																															

Table 6-416. LOCK0_KICK0 Register Field Descriptions

Bit	Field	Type	Reset	Description
31-0	LOCK0_kick0	R/W	0h	- KICK0 component

Copyright © 2025 Texas Instruments Incorporated

6.2.4.123 LOCK0_KICK1 Register (Offset = 100Ch) [reset = 0h]

LOCK0_KICK1 is shown in Figure 6-413 and described in Table 6-417.

Return to the Summary Table.

- KICK1 component

Figure 6-413. LOCK0_KICK1 Register

31	30	29	28	27	26	25	24	23	22	21	20	19	18	17	16	15	14	13	12	11	10	9	8	7	6	5	4	3	2	1	0
LOCK0_kick1																															
R/W-0h																															

Table 6-417. LOCK0_KICK1 Register Field Descriptions

Bit	Field	Type	Reset	Description
31-0	LOCK0_kick1	R/W	0h	- KICK1 component

Copyright © 2025 Texas Instruments Incorporated

6.2.4.124 intr_raw_status Register (Offset = 1010h) [reset = X]

intr_raw_status is shown in Figure 6-414 and described in Table 6-418.

Return to the Summary Table.

Interrupt Raw Status/Set Register

Figure 6-414. intr_raw_status Register

31	30	29	28	27	26	25	24
RESERVED							
R/W-X							
23	22	21	20	19	18	17	16
RESERVED							
R/W-X							
15	14	13	12	11	10	9	8
RESERVED							
R/W-X							
7	6	5	4	3	2	1	0
RESERVED				proxy_err	kick_err	addr_err	prot_err
R/W-X				R/W1S-0h	R/W1S-0h	R/W1S-0h	R/W1S-0h

Table 6-418. intr_raw_status Register Field Descriptions

Bit	Field	Type	Reset	Description
31-4	RESERVED	R/W	X	
3	proxy_err	R/W1S	0h	Proxy0 access violation error. Raw status is read. Write a 1 to set the status. Writing a 0 has no effect.
2	kick_err	R/W1S	0h	Kick access violation error. Raw status is read. Write a 1 to set the status. Writing a 0 has no effect.
1	addr_err	R/W1S	0h	Addressing violation error. Raw status is read. Write a 1 to set the status. Writing a 0 has no effect.
0	prot_err	R/W1S	0h	Protection violation error. Raw status is read. Write a 1 to set the status. Writing a 0 has no effect.

Copyright © 2025 Texas Instruments Incorporated

6.2.4.125 intr_enabled_status_clear Register (Offset = 1014h) [reset = X]

intr_enabled_status_clear is shown in Figure 6-415 and described in Table 6-419.

Return to the Summary Table.

Interrupt Enabled Status/Clear register

Figure 6-415. intr_enabled_status_clear Register

31	30	29	28	27	26	25	24
RESERVED							
R/W-X							
23	22	21	20	19	18	17	16
RESERVED							
R/W-X							
15	14	13	12	11	10	9	8
RESERVED							
R/W-X							
7	6	5	4	3	2	1	0
RESERVED				enabled_proxy_err	enabled_kick_err	enabled_addr_err	enabled_prot_err
R/W-X				R/W1C-0h	R/W1C-0h	R/W1C-0h	R/W1C-0h

Table 6-419. intr_enabled_status_clear Register Field Descriptions

Bit	Field	Type	Reset	Description
31-4	RESERVED	R/W	X	
3	enabled_proxy_err	R/W1C	0h	Proxy0 access violation error. Enabled status is read. Write a 1 to clear the status. Writing a 0 has no effect.
2	enabled_kick_err	R/W1C	0h	Kick access violation error. Enabled status is read. Write a 1 to clear the status. Writing a 0 has no effect.
1	enabled_addr_err	R/W1C	0h	Addressing violation error. Enabled status is read. Write a 1 to clear the status. Writing a 0 has no effect.
0	enabled_prot_err	R/W1C	0h	Protection violation error. Enabled status is read. Write a 1 to clear the status. Writing a 0 has no effect.

Copyright © 2025 Texas Instruments Incorporated

6.2.4.126 intr_enable Register (Offset = 1018h) [reset = X]

intr_enable is shown in Figure 6-416 and described in Table 6-420.

Return to the Summary Table.

Interrupt Enable register

Figure 6-416. intr_enable Register

31	30	29	28	27	26	25	24
RESERVED							
R/W-X							
23	22	21	20	19	18	17	16
RESERVED							
R/W-X							
15	14	13	12	11	10	9	8
RESERVED							
R/W-X							
7	6	5	4	3	2	1	0
RESERVED				proxy_err_en	kick_err_en	addr_err_en	prot_err_en
R/W-X				R/W1S-0h	R/W1S-0h	R/W1S-0h	R/W1S-0h

Table 6-420. intr_enable Register Field Descriptions

Bit	Field	Type	Reset	Description
31-4	RESERVED	R/W	X	
3	proxy_err_en	R/W1S	0h	Proxy0 access violation error enable. Write a 1 to set the enable. Writing a 0 has no effect.
2	kick_err_en	R/W1S	0h	Kick access violation error enable. Write a 1 to set the enable. Writing a 0 has no effect.
1	addr_err_en	R/W1S	0h	Addressing violation error enable. Write a 1 to set the enable. Writing a 0 has no effect.
0	prot_err_en	R/W1S	0h	Protection violation error enable. Write a 1 to set the enable. Writing a 0 has no effect.

Copyright © 2025 Texas Instruments Incorporated

6.2.4.127 intr_enable_clear Register (Offset = 101Ch) [reset = X]

intr_enable_clear is shown in Figure 6-417 and described in Table 6-421.

Return to the Summary Table.

Interrupt Enable Clear register

Figure 6-417. intr_enable_clear Register

31	30	29	28	27	26	25	24
RESERVED							
R/W-X							
23	22	21	20	19	18	17	16
RESERVED							
R/W-X							
15	14	13	12	11	10	9	8
RESERVED							
R/W-X							
7	6	5	4	3	2	1	0
RESERVED				proxy_err_en_clr	kick_err_en_clr	addr_err_en_clr	prot_err_en_clr
R/W-X				R/W1C-0h	R/W1C-0h	R/W1C-0h	R/W1C-0h

Table 6-421. intr_enable_clear Register Field Descriptions

Bit	Field	Type	Reset	Description
31-4	RESERVED	R/W	X	
3	proxy_err_en_clr	R/W1C	0h	Proxy0 access violation error enable clear. Write a 1 to clear the enable. Writing a 0 has no effect.
2	kick_err_en_clr	R/W1C	0h	Kick access violation error enable clear. Write a 1 to clear the enable. Writing a 0 has no effect.
1	addr_err_en_clr	R/W1C	0h	Addressing violation error enable clear. Write a 1 to clear the enable. Writing a 0 has no effect.
0	prot_err_en_clr	R/W1C	0h	Protection violation error enable clear. Write a 1 to clear the enable. Writing a 0 has no effect.

Copyright © 2025 Texas Instruments Incorporated

6.2.4.128 eoi Register (Offset = 1020h) [reset = X]

eoi is shown in Figure 6-418 and described in Table 6-422.

Return to the Summary Table.

EOI register

Figure 6-418. eoi Register

31	30	29	28	27	26	25	24	23	22	21	20	19	18	17	16
RESERVED															
R/W-X															
15	14	13	12	11	10	9	8	7	6	5	4	3	2	1	0
RESERVED								eoi_vector							
R/W-X								R/W-0h							

Table 6-422. eoi Register Field Descriptions

Bit	Field	Type	Reset	Description
31-8	RESERVED	R/W	X	
7-0	eoi_vector	R/W	0h	EOI vector value. Write this with interrupt distribution value in the chip.

Copyright © 2025 Texas Instruments Incorporated

6.2.4.129 fault_address Register (Offset = 1024h) [reset = 0h]

fault_address is shown in Figure 6-419 and described in Table 6-423.

Return to the Summary Table.

Fault Address register

Figure 6-419. fault_address Register

31	30	29	28	27	26	25	24	23	22	21	20	19	18	17	16	15	14	13	12	11	10	9	8	7	6	5	4	3	2	1	0
fault_addr																															
R-0h																															

Table 6-423. fault_address Register Field Descriptions

Bit	Field	Type	Reset	Description
31-0	fault_addr	R	0h	Fault Address.

Copyright © 2025 Texas Instruments Incorporated

6.2.4.130 fault_type_status Register (Offset = 1028h) [reset = X]

fault_type_status is shown in Figure 6-420 and described in Table 6-424.

Return to the Summary Table.

Fault Type Status register

Figure 6-420. fault_type_status Register

31	30	29	28	27	26	25	24
RESERVED							
R-X							
23	22	21	20	19	18	17	16
RESERVED							
R-X							
15	14	13	12	11	10	9	8
RESERVED							
R-X							
7	6	5	4	3	2	1	0
RESERVED	fault_ns	fault_type					
R-X	R-0h	R-0h					

Table 6-424. fault_type_status Register Field Descriptions

Bit	Field	Type	Reset	Description
31-7	RESERVED	R	X	
6	fault_ns	R	0h	Non-secure access.
5-0	fault_type	R	0h	Fault Type 10_0000 = Supervisor read fault - priv = 1 dir = 1 dtype ! = 1 01_0000 = Supervisor write fault - priv = 1 dir = 0 00_1000 = Supervisor execute fault - priv = 1 dir = 1 dtype = 1 00_0100 = User read fault - priv = 0 dir = 1 dtype = 1 00_0010 = User write fault - priv = 0 dir = 0 00_0001 = User execute fault - priv = 0 dir = 1 dtype = 1 00_0000 = No fault

Copyright © 2025 Texas Instruments Incorporated

6.2.4.131 fault_attr_status Register (Offset = 102Ch) [reset = 0h]

fault_attr_status is shown in Figure 6-421 and described in Table 6-425.

Return to the Summary Table.

Fault Attribute Status register

Figure 6-421. fault_attr_status Register

31	30	29	28	27	26	25	24	23	22	21	20	19	18	17	16
fault_xid												fault_routeid			
R-0h												R-0h			
15	14	13	12	11	10	9	8	7	6	5	4	3	2	1	0
fault_routeid								fault_privid							
R-0h								R-0h							

Table 6-425. fault_attr_status Register Field Descriptions

Bit	Field	Type	Reset	Description
31-20	fault_xid	R	0h	XID.
19-8	fault_routeid	R	0h	Route ID.
7-0	fault_privid	R	0h	Privilege ID.

Copyright © 2025 Texas Instruments Incorporated

6.2.4.132 fault_clear Register (Offset = 1030h) [reset = X]

fault_clear is shown in Figure 6-422 and described in Table 6-426.

Return to the Summary Table.

Fault Clear register

Figure 6-422. fault_clear Register

31	30	29	28	27	26	25	24
RESERVED							
W-X							
23	22	21	20	19	18	17	16
RESERVED							
W-X							
15	14	13	12	11	10	9	8
RESERVED							
W-X							
7	6	5	4	3	2	1	0
RESERVED							fault_clr
W-X							W-0h

Table 6-426. fault_clear Register Field Descriptions

Bit	Field	Type	Reset	Description
31-1	RESERVED	W	X	
0	fault_clr	W	0h	Fault clear. Writing a 1 clears the current fault. Writing a 0 has no effect.

Copyright © 2025 Texas Instruments Incorporated

6.2.5 RCSS_RCM Registers

Table 6-427 lists the RCSS_RCM registers. All register offset addresses not listed in Table 6-427 should be considered as reserved locations and the register contents should not be modified.

Table 6-427. RCSS_RCM Registers

Offset	Acronym	Register Name	Section
0h	PID	PID register	Section 7.2.5.1
14h	RCSS_I2CA_CLK_SRC_SEL		Section 7.2.5.2
18h	RCSS_I2CB_CLK_SRC_SEL		Section 7.2.5.3
1Ch	RCSS_SCIA_CLK_SRC_SEL		Section 7.2.5.4
20h	RCSS_SPIA_CLK_SRC_SEL		Section 7.2.5.5
24h	RCSS_SPIB_CLK_SRC_SEL		Section 7.2.5.6
28h	RCSS_ATL_CLK_SRC_SEL		Section 7.2.5.7
2Ch	RCSS_MCASPA_REF0_CLK_SRC_SEL		Section 7.2.5.8
30h	RCSS_MCASPA_REF1_CLK_SRC_SEL		Section 7.2.5.9
34h	RCSS_MCASPA_AUX_CLK_SRC_SEL		Section 7.2.5.10
38h	RCSS_MCASPB_REF0_CLK_SRC_SEL		Section 7.2.5.11
3Ch	RCSS_MCASPB_REF1_CLK_SRC_SEL		Section 7.2.5.12
40h	RCSS_MCASPB_AUX_CLK_SRC_SEL		Section 7.2.5.13
44h	RCSS_MCASPC_REF0_CLK_SRC_SEL		Section 7.2.5.14
48h	RCSS_MCASPC_REF1_CLK_SRC_SEL		Section 7.2.5.15
4Ch	RCSS_MCASPC_AUX_CLK_SRC_SEL		Section 7.2.5.16
50h	RCSS_I2CA_CLK_DIV_VAL		Section 7.2.5.17
54h	RCSS_I2CB_CLK_DIV_VAL		Section 7.2.5.18
58h	RCSS_SCIA_CLK_DIV_VAL		Section 7.2.5.19
5Ch	RCSS_SPIA_CLK_DIV_VAL		Section 7.2.5.20
60h	RCSS_SPIB_CLK_DIV_VAL		Section 7.2.5.21
64h	RCSS_ATL_CLK_DIV_VAL		Section 7.2.5.22
68h	RCSS_MCASPA_REF0_CLK_DIV_VAL		Section 7.2.5.23
6Ch	RCSS_MCASPA_REF1_CLK_DIV_VAL		Section 7.2.5.24
70h	RCSS_MCASPA_AUX_CLK_DIV_VAL		Section 7.2.5.25
74h	RCSS_MCASPB_REF0_CLK_DIV_VAL		Section 7.2.5.26
78h	RCSS_MCASPB_REF1_CLK_DIV_VAL		Section 7.2.5.27
7Ch	RCSS_MCASPB_AUX_CLK_DIV_VAL		Section 7.2.5.28
80h	RCSS_MCASPC_REF0_CLK_DIV_VAL		Section 7.2.5.29
84h	RCSS_MCASPC_REF1_CLK_DIV_VAL		Section 7.2.5.30
88h	RCSS_MCASPC_AUX_CLK_DIV_VAL		Section 7.2.5.31
8Ch	RCSS_I2CA_CLK_GATE		Section 7.2.5.32
90h	RCSS_I2CB_CLK_GATE		Section 7.2.5.33
94h	RCSS_SCIA_CLK_GATE		Section 7.2.5.34
98h	RCSS_SPIA_CLK_GATE		Section 7.2.5.35
9Ch	RCSS_SPIB_CLK_GATE		Section 7.2.5.36
A0h	RCSS_ATL_CLK_GATE		Section 7.2.5.37
A4h	RCSS_MCASPA_REF0_CLK_GATE		Section 7.2.5.38
A8h	RCSS_MCASPA_REF1_CLK_GATE		Section 7.2.5.39
ACh	RCSS_MCASPA_AUX_CLK_GATE		Section 7.2.5.40
B0h	RCSS_MCASPB_REF0_CLK_GATE		Section 7.2.5.41

Copyright © 2025 Texas Instruments Incorporated

Table 6-427. RCSS_RCM Registers (continued)

Offset	Acronym	Register Name	Section
B4h	RCSS_MCASPB_REF1_CLK_GATE		Section 7.2.5.42
B8h	RCSS_MCASPB_AUX_CLK_GATE		Section 7.2.5.43
BCh	RCSS_MCASPC_REF0_CLK_GATE		Section 7.2.5.44
C0h	RCSS_MCASPC_REF1_CLK_GATE		Section 7.2.5.45
C4h	RCSS_MCASPC_AUX_CLK_GATE		Section 7.2.5.46
C8h	RCSS_ECAP_SYS_CLK_GATE		Section 7.2.5.47
CCh	RCSS_CSI2A_SYS_CLK_GATE		Section 7.2.5.48
D0h	RCSS_CSI2B_SYS_CLK_GATE		Section 7.2.5.49
D4h	RCSS_I2CA_CLK_STATUS		Section 7.2.5.50
D8h	RCSS_I2CB_CLK_STATUS		Section 7.2.5.51
DCh	RCSS_SCIA_CLK_STATUS		Section 7.2.5.52
E0h	RCSS_SPIA_CLK_STATUS		Section 7.2.5.53
E4h	RCSS_SPIB_CLK_STATUS		Section 7.2.5.54
E8h	RCSS_ATL_CLK_STATUS		Section 7.2.5.55
ECh	RCSS_MCASPA_REF0_CLK_STATUS		Section 7.2.5.56
F0h	RCSS_MCASPA_REF1_CLK_STATUS		Section 7.2.5.57
F4h	RCSS_MCASPA_AUX_CLK_STATUS		Section 7.2.5.58
F8h	RCSS_MCASPB_REF0_CLK_STATUS		Section 7.2.5.59
FCh	RCSS_MCASPB_REF1_CLK_STATUS		Section 7.2.5.60
100h	RCSS_MCASPB_AUX_CLK_STATUS		Section 7.2.5.61
104h	RCSS_MCASPC_REF0_CLK_STATUS		Section 7.2.5.62
108h	RCSS_MCASPC_REF1_CLK_STATUS		Section 7.2.5.63
10Ch	RCSS_MCASPC_AUX_CLK_STATUS		Section 7.2.5.64
110h	RCSS_ECAP_RST_CTRL		Section 7.2.5.65
114h	RCSS_CSI2A_RST_CTRL		Section 7.2.5.66
118h	RCSS_CSI2B_RST_CTRL		Section 7.2.5.67
11Ch	RCSS_I2CA_RST_CTRL		Section 7.2.5.68
120h	RCSS_I2CB_RST_CTRL		Section 7.2.5.69
124h	RCSS_SCIA_RST_CTRL		Section 7.2.5.70
128h	RCSS_SPIA_RST_CTRL		Section 7.2.5.71
12Ch	RCSS_SPIB_RST_CTRL		Section 7.2.5.72
130h	RCSS_MCASPA_RST_CTRL		Section 7.2.5.73
134h	RCSS_MCASPB_RST_CTRL		Section 7.2.5.74
138h	RCSS_MCASPC_RST_CTRL		Section 7.2.5.75
13Ch	RCSS_GIO_RST_CTRL		Section 7.2.5.76
140h	RCSS_EDMA_RST_CTRL		Section 7.2.5.77
FD0h	HW_SPARE_RW0		Section 7.2.5.78
FD4h	HW_SPARE_RW1		Section 7.2.5.79
FD8h	HW_SPARE_RW2		Section 7.2.5.80
FDCh	HW_SPARE_RW3		Section 7.2.5.81
FE0h	HW_SPARE_RO0		Section 7.2.5.82
FE4h	HW_SPARE_RO1		Section 7.2.5.83
FE8h	HW_SPARE_RO2		Section 7.2.5.84
FECh	HW_SPARE_RO3		Section 7.2.5.85
FF0h	HW_SPARE_WPH		Section 7.2.5.86

Copyright © 2025 Texas Instruments Incorporated

Table 6-427. RCSS_RCM Registers (continued)

Offset	Acronym	Register Name	Section
FF4h	HW_SPARE_REC		Section 7.2.5.87
1008h	LOCK0_KICK0	- KICK0 component	Section 7.2.5.88
100Ch	LOCK0_KICK1	- KICK1 component	Section 7.2.5.89
1010h	intr_raw_status	Interrupt Raw Status/Set Register	Section 7.2.5.90
1014h	intr_enabled_status_clear	Interrupt Enabled Status/Clear register	Section 7.2.5.91
1018h	intr_enable	Interrupt Enable register	Section 7.2.5.92
101Ch	intr_enable_clear	Interrupt Enable Clear register	Section 7.2.5.93
1020h	eoi	EOI register	Section 7.2.5.94
1024h	fault_address	Fault Address register	Section 7.2.5.95
1028h	fault_type_status	Fault Type Status register	Section 7.2.5.96
102Ch	fault_attr_status	Fault Attribute Status register	Section 7.2.5.97
1030h	fault_clear	Fault Clear register	Section 7.2.5.98

Copyright © 2025 Texas Instruments Incorporated

6.2.5.1 PID Register (Offset = 0h) [reset = 61800213h]

PID is shown in Figure 6-423 and described in Table 6-428.

Return to the Summary Table.

PID register

Figure 6-423. PID Register

31	30	29	28	27	26	25	24
PID_msb16							
R-6180h							
23	22	21	20	19	18	17	16
PID_msb16							
R-6180h							
15	14	13	12	11	10	9	8
PID_misc					PID_major		
R-0h					R-2h		
7	6	5	4	3	2	1	0
PID_custom		PID_minor					
R-0h		R-13h					

Table 6-428. PID Register Field Descriptions

Bit	Field	Type	Reset	Description
31-16	PID_msb16	R	6180h	
15-11	PID_misc	R	0h	
10-8	PID_major	R	2h	
7-6	PID_custom	R	0h	
5-0	PID_minor	R	13h	

Copyright © 2025 Texas Instruments Incorporated

6.2.5.2 RCSS_I2CA_CLK_SRC_SEL Register (Offset = 14h) [reset = X]

RCSS_I2CA_CLK_SRC_SEL is shown in Figure 6-424 and described in Table 6-429.

Return to the Summary Table.

Figure 6-424. RCSS_I2CA_CLK_SRC_SEL Register

31	30	29	28	27	26	25	24	23	22	21	20	19	18	17	16	15	14	13	12	11	10	9	8	7	6	5	4	3	2	1	0
RESERVED																				clksrcsel											
R/W-X																				R/W-0h											

Table 6-429. RCSS_I2CA_CLK_SRC_SEL Register Field Descriptions

Bit	Field	Type	Reset	Description
31-12	RESERVED	R/W	X	
11-0	clksrcsel	R/W	0h	Select line for selecting source clock for RCSS_I2CA. Data should be loaded as multibit. For example: if Clock source 0x5 should be selected then 0x555 should be configured to the register.

Copyright © 2025 Texas Instruments Incorporated

6.2.5.3 RCSS_I2CB_CLK_SRC_SEL Register (Offset = 18h) [reset = X]

RCSS_I2CB_CLK_SRC_SEL is shown in Figure 6-425 and described in Table 6-430.

Return to the Summary Table.

Figure 6-425. RCSS_I2CB_CLK_SRC_SEL Register

31	30	29	28	27	26	25	24	23	22	21	20	19	18	17	16	15	14	13	12	11	10	9	8	7	6	5	4	3	2	1	0
RESERVED																				clksrcsel											
R/W-X																				R/W-0h											

Table 6-430. RCSS_I2CB_CLK_SRC_SEL Register Field Descriptions

Bit	Field	Type	Reset	Description
31-12	RESERVED	R/W	X	
11-0	clksrcsel	R/W	0h	Select line for selecting source clock for RCSS I2CB. Data should be loaded as multibit. For example: if Clock source 0x5 should be selected then 0x555 should be configured to the register.

Copyright © 2025 Texas Instruments Incorporated

6.2.5.4 RCSS_SCIA_CLK_SRC_SEL Register (Offset = 1Ch) [reset = X]

RCSS_SCIA_CLK_SRC_SEL is shown in Figure 6-426 and described in Table 6-431.

Return to the Summary Table.

Figure 6-426. RCSS_SCIA_CLK_SRC_SEL Register

31	30	29	28	27	26	25	24	23	22	21	20	19	18	17	16	15	14	13	12	11	10	9	8	7	6	5	4	3	2	1	0
RESERVED																				clksrcsel											
R/W-X																				R/W-0h											

Table 6-431. RCSS_SCIA_CLK_SRC_SEL Register Field Descriptions

Bit	Field	Type	Reset	Description
31-12	RESERVED	R/W	X	
11-0	clksrcsel	R/W	0h	Select line for selecting source clock for RCSS SCIA. Data should be loaded as multibit. For example: if Clock source 0x5 should be selected then 0x555 should be configured to the register.

Copyright © 2025 Texas Instruments Incorporated

6.2.5.5 RCSS_SPIA_CLK_SRC_SEL Register (Offset = 20h) [reset = X]

RCSS_SPIA_CLK_SRC_SEL is shown in Figure 6-427 and described in Table 6-432.

Return to the Summary Table.

Figure 6-427. RCSS_SPIA_CLK_SRC_SEL Register

31	30	29	28	27	26	25	24	23	22	21	20	19	18	17	16	15	14	13	12	11	10	9	8	7	6	5	4	3	2	1	0
RESERVED																				clksrcsel											
R/W-X																				R/W-0h											

Table 6-432. RCSS_SPIA_CLK_SRC_SEL Register Field Descriptions

Bit	Field	Type	Reset	Description
31-12	RESERVED	R/W	X	
11-0	clksrcsel	R/W	0h	Select line for selecting source clock for RCSS_SPIA. Data should be loaded as multibit. For example: if Clock source 0x5 should be selected then 0x555 should be configured to the register.

Copyright © 2025 Texas Instruments Incorporated

6.2.5.6 RCSS_SPIB_CLK_SRC_SEL Register (Offset = 24h) [reset = X]

RCSS_SPIB_CLK_SRC_SEL is shown in Figure 6-428 and described in Table 6-433.

Return to the Summary Table.

Figure 6-428. RCSS_SPIB_CLK_SRC_SEL Register

31	30	29	28	27	26	25	24	23	22	21	20	19	18	17	16	15	14	13	12	11	10	9	8	7	6	5	4	3	2	1	0
RESERVED																				clksrcsel											
R/W-X																				R/W-0h											

Table 6-433. RCSS_SPIB_CLK_SRC_SEL Register Field Descriptions

Bit	Field	Type	Reset	Description
31-12	RESERVED	R/W	X	
11-0	clksrcsel	R/W	0h	Select line for selecting source clock for RCSS SPIB. Data should be loaded as multibit. For example: if Clock source 0x5 should be selected then 0x555 should be configured to the register.

Copyright © 2025 Texas Instruments Incorporated

6.2.5.7 RCSS_ATL_CLK_SRC_SEL Register (Offset = 28h) [reset = X]

RCSS_ATL_CLK_SRC_SEL is shown in Figure 6-429 and described in Table 6-434.

Return to the Summary Table.

Figure 6-429. RCSS_ATL_CLK_SRC_SEL Register

31	30	29	28	27	26	25	24	23	22	21	20	19	18	17	16	15	14	13	12	11	10	9	8	7	6	5	4	3	2	1	0
RESERVED																				clksrcsel											
R/W-X																				R/W-0h											

Table 6-434. RCSS_ATL_CLK_SRC_SEL Register Field Descriptions

Bit	Field	Type	Reset	Description
31-12	RESERVED	R/W	X	
11-0	clksrcsel	R/W	0h	Select line for selecting source clock for RCSS ATL CLK Data should be loaded as multibit. For example: if Clock source 0x5 should be selected then 0x555 should be configured to the register.

Copyright © 2025 Texas Instruments Incorporated

6.2.5.8 RCSS_MCASPA_REF0_CLK_SRC_SEL Register (Offset = 2Ch) [reset = X]

RCSS_MCASPA_REF0_CLK_SRC_SEL is shown in Figure 6-430 and described in Table 6-435.

Return to the Summary Table.

Figure 6-430. RCSS_MCASPA_REF0_CLK_SRC_SEL Register

31	30	29	28	27	26	25	24	23	22	21	20	19	18	17	16	15	14	13	12	11	10	9	8	7	6	5	4	3	2	1	0
RESERVED																				clksrcsel											
R/W-X																				R/W-0h											

Table 6-435. RCSS_MCASPA_REF0_CLK_SRC_SEL Register Field Descriptions

Bit	Field	Type	Reset	Description
31-12	RESERVED	R/W	X	
11-0	clksrcsel	R/W	0h	Select line for selecting source clock for RCSS MCASPA REF0 CLK Data should be loaded as multibit. For example: if Clock source 0x5 should be selected then 0x555 should be configured to the register.

Copyright © 2025 Texas Instruments Incorporated

6.2.5.9 RCSS_MCASPA_REF1_CLK_SRC_SEL Register (Offset = 30h) [reset = X]

RCSS_MCASPA_REF1_CLK_SRC_SEL is shown in Figure 6-431 and described in Table 6-436.

Return to the Summary Table.

Figure 6-431. RCSS_MCASPA_REF1_CLK_SRC_SEL Register

31	30	29	28	27	26	25	24	23	22	21	20	19	18	17	16	15	14	13	12	11	10	9	8	7	6	5	4	3	2	1	0
RESERVED																				clksrcsel											
R/W-X																				R/W-0h											

Table 6-436. RCSS_MCASPA_REF1_CLK_SRC_SEL Register Field Descriptions

Bit	Field	Type	Reset	Description
31-12	RESERVED	R/W	X	
11-0	clksrcsel	R/W	0h	Select line for selecting source clock for RCSS MCASPA REF1 CLK. Data should be loaded as multibit. For example: if Clock source 0x5 should be selected then 0x555 should be configured to the register.

Copyright © 2025 Texas Instruments Incorporated

6.2.5.10 RCSS_MCASPA_AUX_CLK_SRC_SEL Register (Offset = 34h) [reset = X]

RCSS_MCASPA_AUX_CLK_SRC_SEL is shown in Figure 6-432 and described in Table 6-437.

Return to the Summary Table.

Figure 6-432. RCSS_MCASPA_AUX_CLK_SRC_SEL Register

31	30	29	28	27	26	25	24	23	22	21	20	19	18	17	16	15	14	13	12	11	10	9	8	7	6	5	4	3	2	1	0
RESERVED																				clksrcsel											
R/W-X																				R/W-0h											

Table 6-437. RCSS_MCASPA_AUX_CLK_SRC_SEL Register Field Descriptions

Bit	Field	Type	Reset	Description
31-12	RESERVED	R/W	X	
11-0	clksrcsel	R/W	0h	Select line for selecting source clock for RCSS MCASPA AUX CLK Data should be loaded as multibit. For example: if Clock source 0x5 should be selected then 0x555 should be configured to the register.

Copyright © 2025 Texas Instruments Incorporated

6.2.5.11 RCSS_MCASPB_REF0_CLK_SRC_SEL Register (Offset = 38h) [reset = X]

RCSS_MCASPB_REF0_CLK_SRC_SEL is shown in Figure 6-433 and described in Table 6-438.

Return to the Summary Table.

Figure 6-433. RCSS_MCASPB_REF0_CLK_SRC_SEL Register

31	30	29	28	27	26	25	24	23	22	21	20	19	18	17	16	15	14	13	12	11	10	9	8	7	6	5	4	3	2	1	0
RESERVED																				clksrcsel											
R/W-X																				R/W-0h											

Table 6-438. RCSS_MCASPB_REF0_CLK_SRC_SEL Register Field Descriptions

Bit	Field	Type	Reset	Description
31-12	RESERVED	R/W	X	
11-0	clksrcsel	R/W	0h	Select line for selecting source clock for RCSS MCASPB REF0 CLK Data should be loaded as multibit. For example: if Clock source 0x5 should be selected then 0x555 should be configured to the register.

Copyright © 2025 Texas Instruments Incorporated

6.2.5.12 RCSS_MCASPB_REF1_CLK_SRC_SEL Register (Offset = 3Ch) [reset = X]

RCSS_MCASPB_REF1_CLK_SRC_SEL is shown in Figure 6-434 and described in Table 6-439.

Return to the Summary Table.

Figure 6-434. RCSS_MCASPB_REF1_CLK_SRC_SEL Register

31	30	29	28	27	26	25	24	23	22	21	20	19	18	17	16	15	14	13	12	11	10	9	8	7	6	5	4	3	2	1	0
RESERVED																				clksrcsel											
R/W-X																				R/W-0h											

Table 6-439. RCSS_MCASPB_REF1_CLK_SRC_SEL Register Field Descriptions

Bit	Field	Type	Reset	Description
31-12	RESERVED	R/W	X	
11-0	clksrcsel	R/W	0h	Select line for selecting source clock for RCSS MCASPB REF1 CLK. Data should be loaded as multibit. For example: if Clock source 0x5 should be selected then 0x555 should be configured to the register.

Copyright © 2025 Texas Instruments Incorporated

6.2.5.13 RCSS_MCASPB_AUX_CLK_SRC_SEL Register (Offset = 40h) [reset = X]

RCSS_MCASPB_AUX_CLK_SRC_SEL is shown in Figure 6-435 and described in Table 6-440.

Return to the Summary Table.

Figure 6-435. RCSS_MCASPB_AUX_CLK_SRC_SEL Register

31	30	29	28	27	26	25	24	23	22	21	20	19	18	17	16	15	14	13	12	11	10	9	8	7	6	5	4	3	2	1	0
RESERVED																				clksrcsel											
R/W-X																				R/W-0h											

Table 6-440. RCSS_MCASPB_AUX_CLK_SRC_SEL Register Field Descriptions

Bit	Field	Type	Reset	Description
31-12	RESERVED	R/W	X	
11-0	clksrcsel	R/W	0h	Select line for selecting source clock for RCSS MCASPB AUX CLK Data should be loaded as multibit. For example: if Clock source 0x5 should be selected then 0x555 should be configured to the register.

Copyright © 2025 Texas Instruments Incorporated

6.2.5.14 RCSS_MCASPC_REF0_CLK_SRC_SEL Register (Offset = 44h) [reset = X]

RCSS_MCASPC_REF0_CLK_SRC_SEL is shown in Figure 6-436 and described in Table 6-441.

Return to the Summary Table.

Figure 6-436. RCSS_MCASPC_REF0_CLK_SRC_SEL Register

31	30	29	28	27	26	25	24	23	22	21	20	19	18	17	16	15	14	13	12	11	10	9	8	7	6	5	4	3	2	1	0
RESERVED																				clksrcsel											
R/W-X																				R/W-0h											

Table 6-441. RCSS_MCASPC_REF0_CLK_SRC_SEL Register Field Descriptions

Bit	Field	Type	Reset	Description
31-12	RESERVED	R/W	X	
11-0	clksrcsel	R/W	0h	Select line for selecting source clock for RCSS MCASPC REF0 CLK Data should be loaded as multibit. For example: if Clock source 0x5 should be selected then 0x555 should be configured to the register.

Copyright © 2025 Texas Instruments Incorporated

6.2.5.15 RCSS_MCASPC_REF1_CLK_SRC_SEL Register (Offset = 48h) [reset = X]

RCSS_MCASPC_REF1_CLK_SRC_SEL is shown in Figure 6-437 and described in Table 6-442.

Return to the Summary Table.

Figure 6-437. RCSS_MCASPC_REF1_CLK_SRC_SEL Register

31	30	29	28	27	26	25	24	23	22	21	20	19	18	17	16	15	14	13	12	11	10	9	8	7	6	5	4	3	2	1	0
RESERVED																				clksrcsel											
R/W-X																				R/W-0h											

Table 6-442. RCSS_MCASPC_REF1_CLK_SRC_SEL Register Field Descriptions

Bit	Field	Type	Reset	Description
31-12	RESERVED	R/W	X	
11-0	clksrcsel	R/W	0h	Select line for selecting source clock for RCSS MCASPC REF1 CLK. Data should be loaded as multibit. For example: if Clock source 0x5 should be selected then 0x555 should be configured to the register.

Copyright © 2025 Texas Instruments Incorporated

6.2.5.16 RCSS_MCASPC_AUX_CLK_SRC_SEL Register (Offset = 4Ch) [reset = X]

RCSS_MCASPC_AUX_CLK_SRC_SEL is shown in Figure 6-438 and described in Table 6-443.

Return to the Summary Table.

Figure 6-438. RCSS_MCASPC_AUX_CLK_SRC_SEL Register

31	30	29	28	27	26	25	24	23	22	21	20	19	18	17	16	15	14	13	12	11	10	9	8	7	6	5	4	3	2	1	0
RESERVED																				clksrcsel											
R/W-X																				R/W-0h											

Table 6-443. RCSS_MCASPC_AUX_CLK_SRC_SEL Register Field Descriptions

Bit	Field	Type	Reset	Description
31-12	RESERVED	R/W	X	
11-0	clksrcsel	R/W	0h	Select line for selecting source clock for RCSS MCASPC AUX CLK Data should be loaded as multibit. For example: if Clock source 0x5 should be selected then 0x555 should be configured to the register.

Copyright © 2025 Texas Instruments Incorporated

6.2.5.17 RCSS_I2CA_CLK_DIV_VAL Register (Offset = 50h) [reset = X]

RCSS_I2CA_CLK_DIV_VAL is shown in Figure 6-439 and described in Table 6-444.

Return to the Summary Table.

Figure 6-439. RCSS_I2CA_CLK_DIV_VAL Register

31	30	29	28	27	26	25	24	23	22	21	20	19	18	17	16	15	14	13	12	11	10	9	8	7	6	5	4	3	2	1	0
RESERVED																				clkdiv											
R/W-X																				R/W-0h											

Table 6-444. RCSS_I2CA_CLK_DIV_VAL Register Field Descriptions

Bit	Field	Type	Reset	Description
31-12	RESERVED	R/W	X	
11-0	clkdiv	R/W	0h	Divider value for RCSS I2CA selected clock. Data should be loaded as multibit. For example: if divider value of 0x5 should be selected then 0x555 should be configured to the register.

Copyright © 2025 Texas Instruments Incorporated

6.2.5.18 RCSS_I2CB_CLK_DIV_VAL Register (Offset = 54h) [reset = X]

RCSS_I2CB_CLK_DIV_VAL is shown in Figure 6-440 and described in Table 6-445.

Return to the Summary Table.

Figure 6-440. RCSS_I2CB_CLK_DIV_VAL Register

31	30	29	28	27	26	25	24	23	22	21	20	19	18	17	16	15	14	13	12	11	10	9	8	7	6	5	4	3	2	1	0
RESERVED																				clkdiv											
R/W-X																				R/W-0h											

Table 6-445. RCSS_I2CB_CLK_DIV_VAL Register Field Descriptions

Bit	Field	Type	Reset	Description
31-12	RESERVED	R/W	X	
11-0	clkdiv	R/W	0h	Divider value for RCSS I2CB selected clock. Data should be loaded as multibit. For example: if divider value of 0x5 should be selected then 0x555 should be configured to the register.

Copyright © 2025 Texas Instruments Incorporated

6.2.5.19 RCSS_SCIA_CLK_DIV_VAL Register (Offset = 58h) [reset = X]

RCSS_SCIA_CLK_DIV_VAL is shown in Figure 6-441 and described in Table 6-446.

Return to the Summary Table.

Figure 6-441. RCSS_SCIA_CLK_DIV_VAL Register

31	30	29	28	27	26	25	24	23	22	21	20	19	18	17	16	15	14	13	12	11	10	9	8	7	6	5	4	3	2	1	0
RESERVED																				clkdiv											
R/W-X																				R/W-0h											

Table 6-446. RCSS_SCIA_CLK_DIV_VAL Register Field Descriptions

Bit	Field	Type	Reset	Description
31-12	RESERVED	R/W	X	
11-0	clkdiv	R/W	0h	Divider value for RCSS SCIA selected clock. Data should be loaded as multibit. For example: if divider value of 0x5 should be selected then 0x555 should be configured to the register.

Copyright © 2025 Texas Instruments Incorporated

6.2.5.20 RCSS_SPIA_CLK_DIV_VAL Register (Offset = 5Ch) [reset = X]

RCSS_SPIA_CLK_DIV_VAL is shown in Figure 6-442 and described in Table 6-447.

Return to the Summary Table.

Figure 6-442. RCSS_SPIA_CLK_DIV_VAL Register

31	30	29	28	27	26	25	24	23	22	21	20	19	18	17	16	15	14	13	12	11	10	9	8	7	6	5	4	3	2	1	0
RESERVED																				clkdiv											
R/W-X																				R/W-0h											

Table 6-447. RCSS_SPIA_CLK_DIV_VAL Register Field Descriptions

Bit	Field	Type	Reset	Description
31-12	RESERVED	R/W	X	
11-0	clkdiv	R/W	0h	Divider value for RCSS SPIA selected clock. Data should be loaded as multibit. For example: if divider value of 0x5 should be selected then 0x555 should be configured to the register.

Copyright © 2025 Texas Instruments Incorporated

6.2.5.21 RCSS_SPIB_CLK_DIV_VAL Register (Offset = 60h) [reset = X]

RCSS_SPIB_CLK_DIV_VAL is shown in Figure 6-443 and described in Table 6-448.

Return to the Summary Table.

Figure 6-443. RCSS_SPIB_CLK_DIV_VAL Register

31	30	29	28	27	26	25	24	23	22	21	20	19	18	17	16	15	14	13	12	11	10	9	8	7	6	5	4	3	2	1	0
RESERVED																				clkdiv											
R/W-X																				R/W-0h											

Table 6-448. RCSS_SPIB_CLK_DIV_VAL Register Field Descriptions

Bit	Field	Type	Reset	Description
31-12	RESERVED	R/W	X	
11-0	clkdiv	R/W	0h	Divider value for RCSS SPIB selected clock. Data should be loaded as multibit. For example: if divider value of 0x5 should be selected then 0x555 should be configured to the register.

Copyright © 2025 Texas Instruments Incorporated

6.2.5.22 RCSS_ATL_CLK_DIV_VAL Register (Offset = 64h) [reset = X]

RCSS_ATL_CLK_DIV_VAL is shown in Figure 6-444 and described in Table 6-449.

Return to the Summary Table.

Figure 6-444. RCSS_ATL_CLK_DIV_VAL Register

31	30	29	28	27	26	25	24	23	22	21	20	19	18	17	16	15	14	13	12	11	10	9	8	7	6	5	4	3	2	1	0
RESERVED																				clkdiv											
R/W-X																				R/W-0h											

Table 6-449. RCSS_ATL_CLK_DIV_VAL Register Field Descriptions

Bit	Field	Type	Reset	Description
31-12	RESERVED	R/W	X	
11-0	clkdiv	R/W	0h	Divider value for RCSS ATL CLK selected clock. Data should be loaded as multibit. For example: if divider value of 0x5 should be selected then 0x555 should be configured to the register.

Copyright © 2025 Texas Instruments Incorporated

6.2.5.23 RCSS_MCASPA_REF0_CLK_DIV_VAL Register (Offset = 68h) [reset = X]

RCSS_MCASPA_REF0_CLK_DIV_VAL is shown in Figure 6-445 and described in Table 6-450.

Return to the Summary Table.

Figure 6-445. RCSS_MCASPA_REF0_CLK_DIV_VAL Register

31	30	29	28	27	26	25	24	23	22	21	20	19	18	17	16	15	14	13	12	11	10	9	8	7	6	5	4	3	2	1	0
RESERVED																				clkdiv											
R/W-X																				R/W-0h											

Table 6-450. RCSS_MCASPA_REF0_CLK_DIV_VAL Register Field Descriptions

Bit	Field	Type	Reset	Description
31-12	RESERVED	R/W	X	
11-0	clkdiv	R/W	0h	Divider value for RCSS MCASPA REF0 CLK selected clock. Data should be loaded as multibit. For example: if divider value of 0x5 should be selected then 0x555 should be configured to the register.

Copyright © 2025 Texas Instruments Incorporated

6.2.5.24 RCSS_MCASPA_REF1_CLK_DIV_VAL Register (Offset = 6Ch) [reset = X]

RCSS_MCASPA_REF1_CLK_DIV_VAL is shown in Figure 6-446 and described in Table 6-451.

Return to the Summary Table.

Figure 6-446. RCSS_MCASPA_REF1_CLK_DIV_VAL Register

31	30	29	28	27	26	25	24	23	22	21	20	19	18	17	16	15	14	13	12	11	10	9	8	7	6	5	4	3	2	1	0
RESERVED																				clkdiv											
R/W-X																				R/W-0h											

Table 6-451. RCSS_MCASPA_REF1_CLK_DIV_VAL Register Field Descriptions

Bit	Field	Type	Reset	Description
31-12	RESERVED	R/W	X	
11-0	clkdiv	R/W	0h	Divider value for RCSS MCASPA REF1 CLK selected clock. Data should be loaded as multibit. For example: if divider value of 0x5 should be selected then 0x555 should be configured to the register.

Copyright © 2025 Texas Instruments Incorporated

6.2.5.25 RCSS_MCASPA_AUX_CLK_DIV_VAL Register (Offset = 70h) [reset = X]

RCSS_MCASPA_AUX_CLK_DIV_VAL is shown in Figure 6-447 and described in Table 6-452.

Return to the Summary Table.

Figure 6-447. RCSS_MCASPA_AUX_CLK_DIV_VAL Register

31	30	29	28	27	26	25	24	23	22	21	20	19	18	17	16	15	14	13	12	11	10	9	8	7	6	5	4	3	2	1	0
RESERVED																				clkdiv											
R/W-X																				R/W-0h											

Table 6-452. RCSS_MCASPA_AUX_CLK_DIV_VAL Register Field Descriptions

Bit	Field	Type	Reset	Description
31-12	RESERVED	R/W	X	
11-0	clkdiv	R/W	0h	Divider value for RCSS MCASPA AUX CLK selected clock. Data should be loaded as multibit. For example: if divider value of 0x5 should be selected then 0x555 should be configured to the register.

Copyright © 2025 Texas Instruments Incorporated

6.2.5.26 RCSS_MCASPB_REF0_CLK_DIV_VAL Register (Offset = 74h) [reset = X]

RCSS_MCASPB_REF0_CLK_DIV_VAL is shown in Figure 6-448 and described in Table 6-453.

Return to the Summary Table.

Figure 6-448. RCSS_MCASPB_REF0_CLK_DIV_VAL Register

31	30	29	28	27	26	25	24	23	22	21	20	19	18	17	16	15	14	13	12	11	10	9	8	7	6	5	4	3	2	1	0
RESERVED																				clkdiv											
R/W-X																				R/W-0h											

Table 6-453. RCSS_MCASPB_REF0_CLK_DIV_VAL Register Field Descriptions

Bit	Field	Type	Reset	Description
31-12	RESERVED	R/W	X	
11-0	clkdiv	R/W	0h	Divider value for RCSS MCASPB REF0 CLK selected clock. Data should be loaded as multibit. For example: if divider value of 0x5 should be selected then 0x555 should be configured to the register.

Copyright © 2025 Texas Instruments Incorporated

6.2.5.27 RCSS_MCASPB_REF1_CLK_DIV_VAL Register (Offset = 78h) [reset = X]

RCSS_MCASPB_REF1_CLK_DIV_VAL is shown in Figure 6-449 and described in Table 6-454.

Return to the Summary Table.

Figure 6-449. RCSS_MCASPB_REF1_CLK_DIV_VAL Register

31	30	29	28	27	26	25	24	23	22	21	20	19	18	17	16	15	14	13	12	11	10	9	8	7	6	5	4	3	2	1	0
RESERVED																				clkdiv											
R/W-X																				R/W-0h											

Table 6-454. RCSS_MCASPB_REF1_CLK_DIV_VAL Register Field Descriptions

Bit	Field	Type	Reset	Description
31-12	RESERVED	R/W	X	
11-0	clkdiv	R/W	0h	Divider value for RCSS MCASPB REF1 CLK selected clock. Data should be loaded as multibit. For example: if divider value of 0x5 should be selected then 0x555 should be configured to the register.

Copyright © 2025 Texas Instruments Incorporated

6.2.5.28 RCSS_MCASPB_AUX_CLK_DIV_VAL Register (Offset = 7Ch) [reset = X]

RCSS_MCASPB_AUX_CLK_DIV_VAL is shown in Figure 6-450 and described in Table 6-455.

Return to the Summary Table.

Figure 6-450. RCSS_MCASPB_AUX_CLK_DIV_VAL Register

31	30	29	28	27	26	25	24	23	22	21	20	19	18	17	16	15	14	13	12	11	10	9	8	7	6	5	4	3	2	1	0
RESERVED																				clkdiv											
R/W-X																				R/W-0h											

Table 6-455. RCSS_MCASPB_AUX_CLK_DIV_VAL Register Field Descriptions

Bit	Field	Type	Reset	Description
31-12	RESERVED	R/W	X	
11-0	clkdiv	R/W	0h	Divider value for RCSS MCASPB AUX CLK selected clock. Data should be loaded as multibit. For example: if divider value of 0x5 should be selected then 0x555 should be configured to the register.

Copyright © 2025 Texas Instruments Incorporated

6.2.5.29 RCSS_MCASPC_REF0_CLK_DIV_VAL Register (Offset = 80h) [reset = X]

RCSS_MCASPC_REF0_CLK_DIV_VAL is shown in Figure 6-451 and described in Table 6-456.

Return to the Summary Table.

Figure 6-451. RCSS_MCASPC_REF0_CLK_DIV_VAL Register

31	30	29	28	27	26	25	24	23	22	21	20	19	18	17	16	15	14	13	12	11	10	9	8	7	6	5	4	3	2	1	0
RESERVED																				clkdiv											
R/W-X																				R/W-0h											

Table 6-456. RCSS_MCASPC_REF0_CLK_DIV_VAL Register Field Descriptions

Bit	Field	Type	Reset	Description
31-12	RESERVED	R/W	X	
11-0	clkdiv	R/W	0h	Divider value for RCSS MCASPC REF0 CLK selected clock. Data should be loaded as multibit. For example: if divider value of 0x5 should be selected then 0x555 should be configured to the register.

Copyright © 2025 Texas Instruments Incorporated

6.2.5.30 RCSS_MCASPC_REF1_CLK_DIV_VAL Register (Offset = 84h) [reset = X]

RCSS_MCASPC_REF1_CLK_DIV_VAL is shown in Figure 6-452 and described in Table 6-457.

Return to the Summary Table.

Figure 6-452. RCSS_MCASPC_REF1_CLK_DIV_VAL Register

31	30	29	28	27	26	25	24	23	22	21	20	19	18	17	16	15	14	13	12	11	10	9	8	7	6	5	4	3	2	1	0
RESERVED																				clkdiv											
R/W-X																				R/W-0h											

Table 6-457. RCSS_MCASPC_REF1_CLK_DIV_VAL Register Field Descriptions

Bit	Field	Type	Reset	Description
31-12	RESERVED	R/W	X	
11-0	clkdiv	R/W	0h	Divider value for RCSS MCASPC REF1 CLK selected clock. Data should be loaded as multibit. For example: if divider value of 0x5 should be selected then 0x555 should be configured to the register.

Copyright © 2025 Texas Instruments Incorporated

6.2.5.31 RCSS_MCASPC_AUX_CLK_DIV_VAL Register (Offset = 88h) [reset = X]

RCSS_MCASPC_AUX_CLK_DIV_VAL is shown in Figure 6-453 and described in Table 6-458.

Return to the Summary Table.

Figure 6-453. RCSS_MCASPC_AUX_CLK_DIV_VAL Register

31	30	29	28	27	26	25	24	23	22	21	20	19	18	17	16	15	14	13	12	11	10	9	8	7	6	5	4	3	2	1	0
RESERVED																				clkdiv											
R/W-X																				R/W-0h											

Table 6-458. RCSS_MCASPC_AUX_CLK_DIV_VAL Register Field Descriptions

Bit	Field	Type	Reset	Description
31-12	RESERVED	R/W	X	
11-0	clkdiv	R/W	0h	Divider value for RCSS MCASPC AUX CLK selected clock. Data should be loaded as multibit. For example: if divider value of 0x5 should be selected then 0x555 should be configured to the register.

Copyright © 2025 Texas Instruments Incorporated

6.2.5.32 RCSS_I2CA_CLK_GATE Register (Offset = 8Ch) [reset = X]

RCSS_I2CA_CLK_GATE is shown in Figure 6-454 and described in Table 6-459.

Return to the Summary Table.

Figure 6-454. RCSS_I2CA_CLK_GATE Register

31	30	29	28	27	26	25	24	23	22	21	20	19	18	17	16
RESERVED															
R/W-X															
15	14	13	12	11	10	9	8	7	6	5	4	3	2	1	0
RESERVED													gated		
R/W-X													R/W-0h		

Table 6-459. RCSS_I2CA_CLK_GATE Register Field Descriptions

Bit	Field	Type	Reset	Description
31-3	RESERVED	R/W	X	
2-0	gated	R/W	0h	Clock gating config for RCSS I2CA Data should be loaded as multibit. Write 3'b000 : Clock is ungated Write 3'b111 : Clock is gated

Copyright © 2025 Texas Instruments Incorporated

6.2.5.33 RCSS_I2CB_CLK_GATE Register (Offset = 90h) [reset = X]

RCSS_I2CB_CLK_GATE is shown in Figure 6-455 and described in Table 6-460.

Return to the Summary Table.

Figure 6-455. RCSS_I2CB_CLK_GATE Register

31	30	29	28	27	26	25	24	23	22	21	20	19	18	17	16
RESERVED															
R/W-X															
15	14	13	12	11	10	9	8	7	6	5	4	3	2	1	0
RESERVED													gated		
R/W-X													R/W-0h		

Table 6-460. RCSS_I2CB_CLK_GATE Register Field Descriptions

Bit	Field	Type	Reset	Description
31-3	RESERVED	R/W	X	
2-0	gated	R/W	0h	Clock gating config for RCSS I2CB Data should be loaded as multibit. Write 3'b000 : Clock is ungated Write 3'b111 : Clock is gated

Copyright © 2025 Texas Instruments Incorporated

6.2.5.34 RCSS_SCIA_CLK_GATE Register (Offset = 94h) [reset = X]

RCSS_SCIA_CLK_GATE is shown in Figure 6-456 and described in Table 6-461.

Return to the Summary Table.

Figure 6-456. RCSS_SCIA_CLK_GATE Register

31	30	29	28	27	26	25	24	23	22	21	20	19	18	17	16
RESERVED															
R/W-X															
15	14	13	12	11	10	9	8	7	6	5	4	3	2	1	0
RESERVED													gated		
R/W-X													R/W-0h		

Table 6-461. RCSS_SCIA_CLK_GATE Register Field Descriptions

Bit	Field	Type	Reset	Description
31-3	RESERVED	R/W	X	
2-0	gated	R/W	0h	Clock gating config for RCSS SCIA Data should be loaded as multibit. Write 3'b000 : Clock is ungated Write 3'b111 : Clock is gated

Copyright © 2025 Texas Instruments Incorporated

6.2.5.35 RCSS_SPIA_CLK_GATE Register (Offset = 98h) [reset = X]

RCSS_SPIA_CLK_GATE is shown in Figure 6-457 and described in Table 6-462.

Return to the Summary Table.

Figure 6-457. RCSS_SPIA_CLK_GATE Register

31	30	29	28	27	26	25	24	23	22	21	20	19	18	17	16
RESERVED															
R/W-X															
15	14	13	12	11	10	9	8	7	6	5	4	3	2	1	0
RESERVED													gated		
R/W-X													R/W-0h		

Table 6-462. RCSS_SPIA_CLK_GATE Register Field Descriptions

Bit	Field	Type	Reset	Description
31-3	RESERVED	R/W	X	
2-0	gated	R/W	0h	Clock gating config for RCSS SPIA Data should be loaded as multibit. Write 3'b000 : Clock is ungated Write 3'b111 : Clock is gated

Copyright © 2025 Texas Instruments Incorporated

6.2.5.36 RCSS_SPIB_CLK_GATE Register (Offset = 9Ch) [reset = X]

RCSS_SPIB_CLK_GATE is shown in Figure 6-458 and described in Table 6-463.

Return to the Summary Table.

Figure 6-458. RCSS_SPIB_CLK_GATE Register

31	30	29	28	27	26	25	24	23	22	21	20	19	18	17	16
RESERVED															
R/W-X															
15	14	13	12	11	10	9	8	7	6	5	4	3	2	1	0
RESERVED													gated		
R/W-X													R/W-0h		

Table 6-463. RCSS_SPIB_CLK_GATE Register Field Descriptions

Bit	Field	Type	Reset	Description
31-3	RESERVED	R/W	X	
2-0	gated	R/W	0h	Clock gating config for RCSS SPIB Data should be loaded as multibit. Write 3'b000 : Clock is ungated Write 3'b111 : Clock is gated

Copyright © 2025 Texas Instruments Incorporated

6.2.5.37 RCSS_ATL_CLK_GATE Register (Offset = A0h) [reset = X]

RCSS_ATL_CLK_GATE is shown in Figure 6-459 and described in Table 6-464.

Return to the Summary Table.

Figure 6-459. RCSS_ATL_CLK_GATE Register

31	30	29	28	27	26	25	24	23	22	21	20	19	18	17	16
RESERVED															
R/W-X															
15	14	13	12	11	10	9	8	7	6	5	4	3	2	1	0
RESERVED													gated		
R/W-X													R/W-0h		

Table 6-464. RCSS_ATL_CLK_GATE Register Field Descriptions

Bit	Field	Type	Reset	Description
31-3	RESERVED	R/W	X	
2-0	gated	R/W	0h	Clock gating config for RCSS ATL CLK Data should be loaded as multibit. Write 3'b000 : Clock is ungated Write 3'b111 : Clock is gated

Copyright © 2025 Texas Instruments Incorporated

6.2.5.38 RCSS_MCASPA_REF0_CLK_GATE Register (Offset = A4h) [reset = X]

RCSS_MCASPA_REF0_CLK_GATE is shown in Figure 6-460 and described in Table 6-465.

Return to the Summary Table.

Figure 6-460. RCSS_MCASPA_REF0_CLK_GATE Register

31	30	29	28	27	26	25	24	23	22	21	20	19	18	17	16
RESERVED															
R/W-X															
15	14	13	12	11	10	9	8	7	6	5	4	3	2	1	0
RESERVED													gated		
R/W-X													R/W-0h		

Table 6-465. RCSS_MCASPA_REF0_CLK_GATE Register Field Descriptions

Bit	Field	Type	Reset	Description
31-3	RESERVED	R/W	X	
2-0	gated	R/W	0h	Clock gating config for RCSS MCASPA REF0 CLK Data should be loaded as multibit. Write 3'b000 : Clock is ungated Write 3'b111 : Clock is gated

Copyright © 2025 Texas Instruments Incorporated

6.2.5.39 RCSS_MCASPA_REF1_CLK_GATE Register (Offset = A8h) [reset = X]

RCSS_MCASPA_REF1_CLK_GATE is shown in Figure 6-461 and described in Table 6-466.

Return to the Summary Table.

Figure 6-461. RCSS_MCASPA_REF1_CLK_GATE Register

31	30	29	28	27	26	25	24	23	22	21	20	19	18	17	16
RESERVED															
R/W-X															
15	14	13	12	11	10	9	8	7	6	5	4	3	2	1	0
RESERVED													gated		
R/W-X													R/W-0h		

Table 6-466. RCSS_MCASPA_REF1_CLK_GATE Register Field Descriptions

Bit	Field	Type	Reset	Description
31-3	RESERVED	R/W	X	
2-0	gated	R/W	0h	Clock gating config for RCSS MCASPA REF1 CLK Data should be loaded as multibit. Write 3'b000 : Clock is ungated Write 3'b111 : Clock is gated

Copyright © 2025 Texas Instruments Incorporated

6.2.5.40 RCSS_MCASPA_AUX_CLK_GATE Register (Offset = ACh) [reset = X]

RCSS_MCASPA_AUX_CLK_GATE is shown in Figure 6-462 and described in Table 6-467.

Return to the Summary Table.

Figure 6-462. RCSS_MCASPA_AUX_CLK_GATE Register

31	30	29	28	27	26	25	24	23	22	21	20	19	18	17	16
RESERVED															
R/W-X															
15	14	13	12	11	10	9	8	7	6	5	4	3	2	1	0
RESERVED													gated		
R/W-X													R/W-0h		

Table 6-467. RCSS_MCASPA_AUX_CLK_GATE Register Field Descriptions

Bit	Field	Type	Reset	Description
31-3	RESERVED	R/W	X	
2-0	gated	R/W	0h	Clock gating config for RCSS MCASPA AUX CLK Data should be loaded as multibit. Write 3'b000 : Clock is ungated Write 3'b111 : Clock is gated

Copyright © 2025 Texas Instruments Incorporated

6.2.5.41 RCSS_MCASPB_REF0_CLK_GATE Register (Offset = B0h) [reset = X]

RCSS_MCASPB_REF0_CLK_GATE is shown in Figure 6-463 and described in Table 6-468.

Return to the Summary Table.

Figure 6-463. RCSS_MCASPB_REF0_CLK_GATE Register

31	30	29	28	27	26	25	24	23	22	21	20	19	18	17	16
RESERVED															
R/W-X															
15	14	13	12	11	10	9	8	7	6	5	4	3	2	1	0
RESERVED													gated		
R/W-X													R/W-0h		

Table 6-468. RCSS_MCASPB_REF0_CLK_GATE Register Field Descriptions

Bit	Field	Type	Reset	Description
31-3	RESERVED	R/W	X	
2-0	gated	R/W	0h	Clock gating config for RCSS MCASPB REF0 CLK Data should be loaded as multibit. Write 3'b000 : Clock is ungated Write 3'b111 : Clock is gated

Copyright © 2025 Texas Instruments Incorporated

6.2.5.42 RCSS_MCASPB_REF1_CLK_GATE Register (Offset = B4h) [reset = X]

RCSS_MCASPB_REF1_CLK_GATE is shown in Figure 6-464 and described in Table 6-469.

Return to the Summary Table.

Figure 6-464. RCSS_MCASPB_REF1_CLK_GATE Register

31	30	29	28	27	26	25	24	23	22	21	20	19	18	17	16
RESERVED															
R/W-X															
15	14	13	12	11	10	9	8	7	6	5	4	3	2	1	0
RESERVED													gated		
R/W-X													R/W-0h		

Table 6-469. RCSS_MCASPB_REF1_CLK_GATE Register Field Descriptions

Bit	Field	Type	Reset	Description
31-3	RESERVED	R/W	X	
2-0	gated	R/W	0h	Clock gating config for RCSS MCASPB REF1 CLK Data should be loaded as multibit. Write 3'b000 : Clock is ungated Write 3'b111 : Clock is gated

Copyright © 2025 Texas Instruments Incorporated

6.2.5.43 RCSS_MCASPB_AUX_CLK_GATE Register (Offset = B8h) [reset = X]

RCSS_MCASPB_AUX_CLK_GATE is shown in Figure 6-465 and described in Table 6-470.

Return to the Summary Table.

Figure 6-465. RCSS_MCASPB_AUX_CLK_GATE Register

31	30	29	28	27	26	25	24	23	22	21	20	19	18	17	16
RESERVED															
R/W-X															
15	14	13	12	11	10	9	8	7	6	5	4	3	2	1	0
RESERVED													gated		
R/W-X													R/W-0h		

Table 6-470. RCSS_MCASPB_AUX_CLK_GATE Register Field Descriptions

Bit	Field	Type	Reset	Description
31-3	RESERVED	R/W	X	
2-0	gated	R/W	0h	Clock gating config for RCSS MCASPB AUX CLK Data should be loaded as multibit. Write 3'b000 : Clock is ungated Write 3'b111 : Clock is gated

Copyright © 2025 Texas Instruments Incorporated

6.2.5.44 RCSS_MCASPC_REF0_CLK_GATE Register (Offset = BCh) [reset = X]

RCSS_MCASPC_REF0_CLK_GATE is shown in Figure 6-466 and described in Table 6-471.

Return to the Summary Table.

Figure 6-466. RCSS_MCASPC_REF0_CLK_GATE Register

31	30	29	28	27	26	25	24	23	22	21	20	19	18	17	16
RESERVED															
R/W-X															
15	14	13	12	11	10	9	8	7	6	5	4	3	2	1	0
RESERVED													gated		
R/W-X													R/W-0h		

Table 6-471. RCSS_MCASPC_REF0_CLK_GATE Register Field Descriptions

Bit	Field	Type	Reset	Description
31-3	RESERVED	R/W	X	
2-0	gated	R/W	0h	Clock gating config for RCSS MCASPC REF0 CLK Data should be loaded as multibit. Write 3'b000 : Clock is ungated Write 3'b111 : Clock is gated

Copyright © 2025 Texas Instruments Incorporated

6.2.5.45 RCSS_MCASPC_REF1_CLK_GATE Register (Offset = C0h) [reset = X]

RCSS_MCASPC_REF1_CLK_GATE is shown in Figure 6-467 and described in Table 6-472.

Return to the Summary Table.

Figure 6-467. RCSS_MCASPC_REF1_CLK_GATE Register

31	30	29	28	27	26	25	24	23	22	21	20	19	18	17	16
RESERVED															
R/W-X															
15	14	13	12	11	10	9	8	7	6	5	4	3	2	1	0
RESERVED													gated		
R/W-X													R/W-0h		

Table 6-472. RCSS_MCASPC_REF1_CLK_GATE Register Field Descriptions

Bit	Field	Type	Reset	Description
31-3	RESERVED	R/W	X	
2-0	gated	R/W	0h	Clock gating config for RCSS MCASPC REF1 CLK Data should be loaded as multibit. Write 3'b000 : Clock is ungated Write 3'b111 : Clock is gated

Copyright © 2025 Texas Instruments Incorporated

6.2.5.46 RCSS_MCASPC_AUX_CLK_GATE Register (Offset = C4h) [reset = X]

RCSS_MCASPC_AUX_CLK_GATE is shown in Figure 6-468 and described in Table 6-473.

Return to the Summary Table.

Figure 6-468. RCSS_MCASPC_AUX_CLK_GATE Register

31	30	29	28	27	26	25	24	23	22	21	20	19	18	17	16
RESERVED															
R/W-X															
15	14	13	12	11	10	9	8	7	6	5	4	3	2	1	0
RESERVED													gated		
R/W-X													R/W-0h		

Table 6-473. RCSS_MCASPC_AUX_CLK_GATE Register Field Descriptions

Bit	Field	Type	Reset	Description
31-3	RESERVED	R/W	X	
2-0	gated	R/W	0h	Clock gating config for RCSS MCASPC AUX CLK Data should be loaded as multibit. Write 3'b000 : Clock is ungated Write 3'b111 : Clock is gated

Copyright © 2025 Texas Instruments Incorporated

6.2.5.47 RCSS_ECAP_SYS_CLK_GATE Register (Offset = C8h) [reset = X]

RCSS_ECAP_SYS_CLK_GATE is shown in Figure 6-469 and described in Table 6-474.

Return to the Summary Table.

Figure 6-469. RCSS_ECAP_SYS_CLK_GATE Register

31	30	29	28	27	26	25	24	23	22	21	20	19	18	17	16
RESERVED															
R/W-X															
15	14	13	12	11	10	9	8	7	6	5	4	3	2	1	0
RESERVED													gated		
R/W-X													R/W-0h		

Table 6-474. RCSS_ECAP_SYS_CLK_GATE Register Field Descriptions

Bit	Field	Type	Reset	Description
31-3	RESERVED	R/W	X	
2-0	gated	R/W	0h	Clock gating config for RCSS ECAP Data should be loaded as multibit. Write 3'b000 : Clock is ungated Write 3'b111 : Clock is gated

Copyright © 2025 Texas Instruments Incorporated

6.2.5.48 RCSS_CSI2A_SYS_CLK_GATE Register (Offset = CCh) [reset = X]

RCSS_CSI2A_SYS_CLK_GATE is shown in Figure 6-470 and described in Table 6-475.

Return to the Summary Table.

Figure 6-470. RCSS_CSI2A_SYS_CLK_GATE Register

31	30	29	28	27	26	25	24	23	22	21	20	19	18	17	16
RESERVED															
R/W-X															
15	14	13	12	11	10	9	8	7	6	5	4	3	2	1	0
RESERVED														gated	
R/W-X														R/W-0h	

Table 6-475. RCSS_CSI2A_SYS_CLK_GATE Register Field Descriptions

Bit	Field	Type	Reset	Description
31-3	RESERVED	R/W	X	
2-0	gated	R/W	0h	Clock gating config for RCSS CSI2A Data should be loaded as multibit. Write 3'b000 : Clock is ungated Write 3'b111 : Clock is gated

Copyright © 2025 Texas Instruments Incorporated

6.2.5.49 RCSS_CSI2B_SYS_CLK_GATE Register (Offset = D0h) [reset = X]

RCSS_CSI2B_SYS_CLK_GATE is shown in Figure 6-471 and described in Table 6-476.

Return to the Summary Table.

Figure 6-471. RCSS_CSI2B_SYS_CLK_GATE Register

31	30	29	28	27	26	25	24	23	22	21	20	19	18	17	16
RESERVED															
R/W-X															
15	14	13	12	11	10	9	8	7	6	5	4	3	2	1	0
RESERVED													gated		
R/W-X													R/W-0h		

Table 6-476. RCSS_CSI2B_SYS_CLK_GATE Register Field Descriptions

Bit	Field	Type	Reset	Description
31-3	RESERVED	R/W	X	
2-0	gated	R/W	0h	Clock gating config for RCSS CSI2B Data should be loaded as multibit. Write 3'b000 : Clock is ungated Write 3'b111 : Clock is gated

Copyright © 2025 Texas Instruments Incorporated

6.2.5.50 RCSS_I2CA_CLK_STATUS Register (Offset = D4h) [reset = X]

RCSS_I2CA_CLK_STATUS is shown in Figure 6-472 and described in Table 6-477.

Return to the Summary Table.

Figure 6-472. RCSS_I2CA_CLK_STATUS Register

31	30	29	28	27	26	25	24	23	22	21	20	19	18	17	16
RESERVED															
R-X															
15	14	13	12	11	10	9	8	7	6	5	4	3	2	1	0
currdivider								clkinuse							
R-0h								R-1h							

Table 6-477. RCSS_I2CA_CLK_STATUS Register Field Descriptions

Bit	Field	Type	Reset	Description
31-16	RESERVED	R	X	
15-8	currdivider	R	0h	Status shows the current divider value chosen for RCSS I2CA Clock
7-0	clkinuse	R	1h	Status shows the source clock selected for RCSS I2CA Clock

Copyright © 2025 Texas Instruments Incorporated

6.2.5.51 RCSS_I2CB_CLK_STATUS Register (Offset = D8h) [reset = X]

RCSS_I2CB_CLK_STATUS is shown in Figure 6-473 and described in Table 6-478.

Return to the Summary Table.

Figure 6-473. RCSS_I2CB_CLK_STATUS Register

31	30	29	28	27	26	25	24	23	22	21	20	19	18	17	16
RESERVED															
R-X															
15	14	13	12	11	10	9	8	7	6	5	4	3	2	1	0
currdivider								clkinuse							
R-0h								R-1h							

Table 6-478. RCSS_I2CB_CLK_STATUS Register Field Descriptions

Bit	Field	Type	Reset	Description
31-16	RESERVED	R	X	
15-8	currdivider	R	0h	Status shows the current divider value chosen for RCSS I2CB Clock
7-0	clkinuse	R	1h	Status shows the source clock selected for RCSS I2CB Clock

Copyright © 2025 Texas Instruments Incorporated

6.2.5.52 RCSS_SCIA_CLK_STATUS Register (Offset = DCh) [reset = X]

RCSS_SCIA_CLK_STATUS is shown in Figure 6-474 and described in Table 6-479.

Return to the Summary Table.

Figure 6-474. RCSS_SCIA_CLK_STATUS Register

31	30	29	28	27	26	25	24	23	22	21	20	19	18	17	16
RESERVED															
R-X															
15	14	13	12	11	10	9	8	7	6	5	4	3	2	1	0
currdivider								clkinuse							
R-0h								R-1h							

Table 6-479. RCSS_SCIA_CLK_STATUS Register Field Descriptions

Bit	Field	Type	Reset	Description
31-16	RESERVED	R	X	
15-8	currdivider	R	0h	Status shows the current divider value chosen for RCSS SCIA Clock
7-0	clkinuse	R	1h	Status shows the source clock selected for RCSS SCIA Clock

Copyright © 2025 Texas Instruments Incorporated

6.2.5.53 RCSS_SPIA_CLK_STATUS Register (Offset = E0h) [reset = X]

RCSS_SPIA_CLK_STATUS is shown in Figure 6-475 and described in Table 6-480.

Return to the Summary Table.

Figure 6-475. RCSS_SPIA_CLK_STATUS Register

31	30	29	28	27	26	25	24	23	22	21	20	19	18	17	16
RESERVED															
R-X															
15	14	13	12	11	10	9	8	7	6	5	4	3	2	1	0
currdivider								clkinuse							
R-0h								R-1h							

Table 6-480. RCSS_SPIA_CLK_STATUS Register Field Descriptions

Bit	Field	Type	Reset	Description
31-16	RESERVED	R	X	
15-8	currdivider	R	0h	Status shows the current divider value chosen for RCSS SPIA Clock
7-0	clkinuse	R	1h	Status shows the source clock selected for RCSS SPIA Clock

Copyright © 2025 Texas Instruments Incorporated

6.2.5.54 RCSS_SPIB_CLK_STATUS Register (Offset = E4h) [reset = X]

RCSS_SPIB_CLK_STATUS is shown in Figure 6-476 and described in Table 6-481.

Return to the Summary Table.

Figure 6-476. RCSS_SPIB_CLK_STATUS Register

31	30	29	28	27	26	25	24	23	22	21	20	19	18	17	16
RESERVED															
R-X															
15	14	13	12	11	10	9	8	7	6	5	4	3	2	1	0
currdivider								clkinuse							
R-0h								R-1h							

Table 6-481. RCSS_SPIB_CLK_STATUS Register Field Descriptions

Bit	Field	Type	Reset	Description
31-16	RESERVED	R	X	
15-8	currdivider	R	0h	Status shows the current divider value chosen for RCSS SPIB Clock
7-0	clkinuse	R	1h	Status shows the source clock selected for RCSS SPIB Clock

Copyright © 2025 Texas Instruments Incorporated

6.2.5.55 RCSS_ATL_CLK_STATUS Register (Offset = E8h) [reset = X]

RCSS_ATL_CLK_STATUS is shown in Figure 6-477 and described in Table 6-482.

Return to the Summary Table.

Figure 6-477. RCSS_ATL_CLK_STATUS Register

31	30	29	28	27	26	25	24	23	22	21	20	19	18	17	16
RESERVED															
R-X															
15	14	13	12	11	10	9	8	7	6	5	4	3	2	1	0
currdivider								clkinuse							
R-0h								R-1h							

Table 6-482. RCSS_ATL_CLK_STATUS Register Field Descriptions

Bit	Field	Type	Reset	Description
31-16	RESERVED	R	X	
15-8	currdivider	R	0h	Status shows the current divider value chosen for RCSS ATL_CLK Clock
7-0	clkinuse	R	1h	Status shows the source clock selected for RCSS ATL_CLK Clock

Copyright © 2025 Texas Instruments Incorporated

6.2.5.56 RCSS_MCASPA_REF0_CLK_STATUS Register (Offset = ECh) [reset = X]

RCSS_MCASPA_REF0_CLK_STATUS is shown in Figure 6-478 and described in Table 6-483.

Return to the Summary Table.

Figure 6-478. RCSS_MCASPA_REF0_CLK_STATUS Register

31	30	29	28	27	26	25	24	23	22	21	20	19	18	17	16
RESERVED															
R-X															
15	14	13	12	11	10	9	8	7	6	5	4	3	2	1	0
currdivider								clkinuse							
R-0h								R-1h							

Table 6-483. RCSS_MCASPA_REF0_CLK_STATUS Register Field Descriptions

Bit	Field	Type	Reset	Description
31-16	RESERVED	R	X	
15-8	currdivider	R	0h	Status shows the current divider value chosen for RCSS MCASPA_REF0_CLK Clock
7-0	clkinuse	R	1h	Status shows the source clock selected for RCSS MCASPA_REF0_CLK Clock

Copyright © 2025 Texas Instruments Incorporated

6.2.5.57 RCSS_MCASPA_REF1_CLK_STATUS Register (Offset = F0h) [reset = X]

RCSS_MCASPA_REF1_CLK_STATUS is shown in Figure 6-479 and described in Table 6-484.

Return to the Summary Table.

Figure 6-479. RCSS_MCASPA_REF1_CLK_STATUS Register

31	30	29	28	27	26	25	24	23	22	21	20	19	18	17	16
RESERVED															
R-X															
15	14	13	12	11	10	9	8	7	6	5	4	3	2	1	0
currdivider								clkinuse							
R-0h								R-1h							

Table 6-484. RCSS_MCASPA_REF1_CLK_STATUS Register Field Descriptions

Bit	Field	Type	Reset	Description
31-16	RESERVED	R	X	
15-8	currdivider	R	0h	Status shows the current divider value chosen for RCSS MCASPA_REF1_CLK Clock
7-0	clkinuse	R	1h	Status shows the source clock selected for RCSS MCASPA_REF1_CLK Clock

Copyright © 2025 Texas Instruments Incorporated

6.2.5.58 RCSS_MCASPA_AUX_CLK_STATUS Register (Offset = F4h) [reset = X]

RCSS_MCASPA_AUX_CLK_STATUS is shown in Figure 6-480 and described in Table 6-485.

Return to the Summary Table.

Figure 6-480. RCSS_MCASPA_AUX_CLK_STATUS Register

31	30	29	28	27	26	25	24	23	22	21	20	19	18	17	16
RESERVED															
R-X															
15	14	13	12	11	10	9	8	7	6	5	4	3	2	1	0
currdivider								clkinuse							
R-0h								R-1h							

Table 6-485. RCSS_MCASPA_AUX_CLK_STATUS Register Field Descriptions

Bit	Field	Type	Reset	Description
31-16	RESERVED	R	X	
15-8	currdivider	R	0h	Status shows the current divider value chosen for RCSS MCASPA_AUX_CLK Clock
7-0	clkinuse	R	1h	Status shows the source clock selected for RCSS MCASPA_AUX_CLK Clock

Copyright © 2025 Texas Instruments Incorporated

6.2.5.59 RCSS_MCASPB_REF0_CLK_STATUS Register (Offset = F8h) [reset = X]

RCSS_MCASPB_REF0_CLK_STATUS is shown in Figure 6-481 and described in Table 6-486.

Return to the Summary Table.

Figure 6-481. RCSS_MCASPB_REF0_CLK_STATUS Register

31	30	29	28	27	26	25	24	23	22	21	20	19	18	17	16
RESERVED															
R-X															
15	14	13	12	11	10	9	8	7	6	5	4	3	2	1	0
currdivider								clkinuse							
R-0h								R-1h							

Table 6-486. RCSS_MCASPB_REF0_CLK_STATUS Register Field Descriptions

Bit	Field	Type	Reset	Description
31-16	RESERVED	R	X	
15-8	currdivider	R	0h	Status shows the current divider value chosen for RCSS MCASPB_REF0_CLK Clock
7-0	clkinuse	R	1h	Status shows the source clock selected for RCSS MCASPB_REF0_CLK Clock

Copyright © 2025 Texas Instruments Incorporated

6.2.5.60 RCSS_MCASPB_REF1_CLK_STATUS Register (Offset = FCh) [reset = X]

RCSS_MCASPB_REF1_CLK_STATUS is shown in Figure 6-482 and described in Table 6-487.

Return to the Summary Table.

Figure 6-482. RCSS_MCASPB_REF1_CLK_STATUS Register

31	30	29	28	27	26	25	24	23	22	21	20	19	18	17	16
RESERVED															
R-X															
15	14	13	12	11	10	9	8	7	6	5	4	3	2	1	0
currdivider								clkinuse							
R-0h								R-1h							

Table 6-487. RCSS_MCASPB_REF1_CLK_STATUS Register Field Descriptions

Bit	Field	Type	Reset	Description
31-16	RESERVED	R	X	
15-8	currdivider	R	0h	Status shows the current divider value chosen for RCSS MCASPB_REF1_CLK Clock
7-0	clkinuse	R	1h	Status shows the source clock selected for RCSS MCASPB_REF1_CLK Clock

Copyright © 2025 Texas Instruments Incorporated

6.2.5.61 RCSS_MCASPB_AUX_CLK_STATUS Register (Offset = 100h) [reset = X]

RCSS_MCASPB_AUX_CLK_STATUS is shown in Figure 6-483 and described in Table 6-488.

Return to the Summary Table.

Figure 6-483. RCSS_MCASPB_AUX_CLK_STATUS Register

31	30	29	28	27	26	25	24	23	22	21	20	19	18	17	16
RESERVED															
R-X															
15	14	13	12	11	10	9	8	7	6	5	4	3	2	1	0
currdivider								clkinuse							
R-0h								R-1h							

Table 6-488. RCSS_MCASPB_AUX_CLK_STATUS Register Field Descriptions

Bit	Field	Type	Reset	Description
31-16	RESERVED	R	X	
15-8	currdivider	R	0h	Status shows the current divider value chosen for RCSS MCASPB_AUX_CLK Clock
7-0	clkinuse	R	1h	Status shows the source clock selected for RCSS MCASPB_AUX_CLK Clock

Copyright © 2025 Texas Instruments Incorporated

6.2.5.62 RCSS_MCASPC_REF0_CLK_STATUS Register (Offset = 104h) [reset = X]

RCSS_MCASPC_REF0_CLK_STATUS is shown in Figure 6-484 and described in Table 6-489.

Return to the Summary Table.

Figure 6-484. RCSS_MCASPC_REF0_CLK_STATUS Register

31	30	29	28	27	26	25	24	23	22	21	20	19	18	17	16
RESERVED															
R-X															
15	14	13	12	11	10	9	8	7	6	5	4	3	2	1	0
currdivider								clkinuse							
R-0h								R-1h							

Table 6-489. RCSS_MCASPC_REF0_CLK_STATUS Register Field Descriptions

Bit	Field	Type	Reset	Description
31-16	RESERVED	R	X	
15-8	currdivider	R	0h	Status shows the current divider value chosen for RCSS MCASPC_REF0_CLK Clock
7-0	clkinuse	R	1h	Status shows the source clock selected for RCSS MCASPC_REF0_CLK Clock

Copyright © 2025 Texas Instruments Incorporated

6.2.5.63 RCSS_MCASPC_REF1_CLK_STATUS Register (Offset = 108h) [reset = X]

RCSS_MCASPC_REF1_CLK_STATUS is shown in Figure 6-485 and described in Table 6-490.

Return to the Summary Table.

Figure 6-485. RCSS_MCASPC_REF1_CLK_STATUS Register

31	30	29	28	27	26	25	24	23	22	21	20	19	18	17	16
RESERVED															
R-X															
15	14	13	12	11	10	9	8	7	6	5	4	3	2	1	0
currdivider								clkinuse							
R-0h								R-1h							

Table 6-490. RCSS_MCASPC_REF1_CLK_STATUS Register Field Descriptions

Bit	Field	Type	Reset	Description
31-16	RESERVED	R	X	
15-8	currdivider	R	0h	Status shows the current divider value chosen for RCSS MCASPC_REF1_CLK Clock
7-0	clkinuse	R	1h	Status shows the source clock selected for RCSS MCASPC_REF1_CLK Clock

Copyright © 2025 Texas Instruments Incorporated

6.2.5.64 RCSS_MCASPC_AUX_CLK_STATUS Register (Offset = 10Ch) [reset = X]

RCSS_MCASPC_AUX_CLK_STATUS is shown in Figure 6-486 and described in Table 6-491.

Return to the Summary Table.

Figure 6-486. RCSS_MCASPC_AUX_CLK_STATUS Register

31	30	29	28	27	26	25	24	23	22	21	20	19	18	17	16
RESERVED															
R-X															
15	14	13	12	11	10	9	8	7	6	5	4	3	2	1	0
currdivider								clkinuse							
R-0h								R-1h							

Table 6-491. RCSS_MCASPC_AUX_CLK_STATUS Register Field Descriptions

Bit	Field	Type	Reset	Description
31-16	RESERVED	R	X	
15-8	currdivider	R	0h	Status shows the current divider value chosen for RCSS MCASPC_AUX_CLK Clock
7-0	clkinuse	R	1h	Status shows the source clock selected for RCSS MCASPC_AUX_CLK Clock

Copyright © 2025 Texas Instruments Incorporated

6.2.5.65 RCSS_ECAP_RST_CTRL Register (Offset = 110h) [reset = X]

RCSS_ECAP_RST_CTRL is shown in Figure 6-487 and described in Table 6-492.

Return to the Summary Table.

Figure 6-487. RCSS_ECAP_RST_CTRL Register

31	30	29	28	27	26	25	24	23	22	21	20	19	18	17	16
RESERVED															
R/W-X															
15	14	13	12	11	10	9	8	7	6	5	4	3	2	1	0
RESERVED													assert		
R/W-X													R/W-0h		

Table 6-492. RCSS_ECAP_RST_CTRL Register Field Descriptions

Bit	Field	Type	Reset	Description
31-3	RESERVED	R/W	X	
2-0	assert	R/W	0h	This feature is for debug purpose only. Software need to ensure the correct state of Device/IP before configuring this reset control for RCSS ECAP Data should be loaded as multibit. Write 3'b000: Reset is not asserted by SW. There could be another reset source which could reset the module. Write 3'b111 : Reset is asserted by SW

Copyright © 2025 Texas Instruments Incorporated

6.2.5.66 RCSS_CSI2A_RST_CTRL Register (Offset = 114h) [reset = X]

RCSS_CSI2A_RST_CTRL is shown in Figure 6-488 and described in Table 6-493.

Return to the Summary Table.

Figure 6-488. RCSS_CSI2A_RST_CTRL Register

31	30	29	28	27	26	25	24	23	22	21	20	19	18	17	16
RESERVED															
R/W-X															
15	14	13	12	11	10	9	8	7	6	5	4	3	2	1	0
RESERVED													assert		
R/W-X													R/W-0h		

Table 6-493. RCSS_CSI2A_RST_CTRL Register Field Descriptions

Bit	Field	Type	Reset	Description
31-3	RESERVED	R/W	X	
2-0	assert	R/W	0h	This feature is for debug purpose only. Software need to ensure the correct state of Device/IP before configuring this reset control for RCSS CSI2A Data should be loaded as multibit. Write 3'b000: Reset is not asserted by SW. There could be another reset source which could reset the module. Write 3'b111 : Reset is asserted by SW

Copyright © 2025 Texas Instruments Incorporated

6.2.5.67 RCSS_CSI2B_RST_CTRL Register (Offset = 118h) [reset = X]

RCSS_CSI2B_RST_CTRL is shown in Figure 6-489 and described in Table 6-494.

Return to the Summary Table.

Figure 6-489. RCSS_CSI2B_RST_CTRL Register

31	30	29	28	27	26	25	24	23	22	21	20	19	18	17	16
RESERVED															
R/W-X															
15	14	13	12	11	10	9	8	7	6	5	4	3	2	1	0
RESERVED													assert		
R/W-X													R/W-0h		

Table 6-494. RCSS_CSI2B_RST_CTRL Register Field Descriptions

Bit	Field	Type	Reset	Description
31-3	RESERVED	R/W	X	
2-0	assert	R/W	0h	This feature is for debug purpose only. Software need to ensure the correct state of Device/IP before configuring this reset control for RCSS CSI2B Data should be loaded as multibit. Write 3'b000: Reset is not asserted by SW. There could be another reset source which could reset the module. Write 3'b111 : Reset is asserted by SW

Copyright © 2025 Texas Instruments Incorporated

6.2.5.68 RCSS_I2CA_RST_CTRL Register (Offset = 11Ch) [reset = X]

RCSS_I2CA_RST_CTRL is shown in Figure 6-490 and described in Table 6-495.

Return to the Summary Table.

Figure 6-490. RCSS_I2CA_RST_CTRL Register

31	30	29	28	27	26	25	24	23	22	21	20	19	18	17	16
RESERVED															
R/W-X															
15	14	13	12	11	10	9	8	7	6	5	4	3	2	1	0
RESERVED													assert		
R/W-X													R/W-0h		

Table 6-495. RCSS_I2CA_RST_CTRL Register Field Descriptions

Bit	Field	Type	Reset	Description
31-3	RESERVED	R/W	X	
2-0	assert	R/W	0h	This feature is for debug purpose only. Software need to ensure the correct state of Device/IP before configuring this reset control for RCSS I2CA Data should be loaded as multibit. Write 3'b000: Reset is not asserted by SW. There could be another reset source which could reset the module. Write 3'b111 : Reset is asserted by SW

Copyright © 2025 Texas Instruments Incorporated

6.2.5.69 RCSS_I2CB_RST_CTRL Register (Offset = 120h) [reset = X]

RCSS_I2CB_RST_CTRL is shown in Figure 6-491 and described in Table 6-496.

Return to the Summary Table.

Figure 6-491. RCSS_I2CB_RST_CTRL Register

31	30	29	28	27	26	25	24	23	22	21	20	19	18	17	16
RESERVED															
R/W-X															
15	14	13	12	11	10	9	8	7	6	5	4	3	2	1	0
RESERVED													assert		
R/W-X													R/W-0h		

Table 6-496. RCSS_I2CB_RST_CTRL Register Field Descriptions

Bit	Field	Type	Reset	Description
31-3	RESERVED	R/W	X	
2-0	assert	R/W	0h	This feature is for debug purpose only. Software need to ensure the correct state of Device/IP before configuring this reset control for RCSS I2CB Data should be loaded as multibit. Write 3'b000: Reset is not asserted by SW. There could be another reset source which could reset the module. Write 3'b111 : Reset is asserted by SW

Copyright © 2025 Texas Instruments Incorporated

6.2.5.70 RCSS_SCIA_RST_CTRL Register (Offset = 124h) [reset = X]

RCSS_SCIA_RST_CTRL is shown in Figure 6-492 and described in Table 6-497.

Return to the Summary Table.

Figure 6-492. RCSS_SCIA_RST_CTRL Register

31	30	29	28	27	26	25	24	23	22	21	20	19	18	17	16
RESERVED															
R/W-X															
15	14	13	12	11	10	9	8	7	6	5	4	3	2	1	0
RESERVED													assert		
R/W-X													R/W-0h		

Table 6-497. RCSS_SCIA_RST_CTRL Register Field Descriptions

Bit	Field	Type	Reset	Description
31-3	RESERVED	R/W	X	
2-0	assert	R/W	0h	This feature is for debug purpose only. Software need to ensure the correct state of Device/IP before configuring this reset control for RCSS SCIA Data should be loaded as multibit. Write 3'b000: Reset is not asserted by SW. There could be another reset source which could reset the module. Write 3'b111 : Reset is asserted by SW

Copyright © 2025 Texas Instruments Incorporated

6.2.5.71 RCSS_SPIA_RST_CTRL Register (Offset = 128h) [reset = X]

RCSS_SPIA_RST_CTRL is shown in Figure 6-493 and described in Table 6-498.

Return to the Summary Table.

Figure 6-493. RCSS_SPIA_RST_CTRL Register

31	30	29	28	27	26	25	24	23	22	21	20	19	18	17	16
RESERVED															
R/W-X															
15	14	13	12	11	10	9	8	7	6	5	4	3	2	1	0
RESERVED													assert		
R/W-X													R/W-0h		

Table 6-498. RCSS_SPIA_RST_CTRL Register Field Descriptions

Bit	Field	Type	Reset	Description
31-3	RESERVED	R/W	X	
2-0	assert	R/W	0h	This feature is for debug purpose only. Software need to ensure the correct state of Device/IP before configuring this reset control for RCSS SPIA Data should be loaded as multibit. Write 3'b000: Reset is not asserted by SW. There could be another reset source which could reset the module. Write 3'b111 : Reset is asserted by SW

Copyright © 2025 Texas Instruments Incorporated

6.2.5.72 RCSS_SPIB_RST_CTRL Register (Offset = 12Ch) [reset = X]

RCSS_SPIB_RST_CTRL is shown in Figure 6-494 and described in Table 6-499.

Return to the Summary Table.

Figure 6-494. RCSS_SPIB_RST_CTRL Register

31	30	29	28	27	26	25	24	23	22	21	20	19	18	17	16
RESERVED															
R/W-X															
15	14	13	12	11	10	9	8	7	6	5	4	3	2	1	0
RESERVED													assert		
R/W-X													R/W-0h		

Table 6-499. RCSS_SPIB_RST_CTRL Register Field Descriptions

Bit	Field	Type	Reset	Description
31-3	RESERVED	R/W	X	
2-0	assert	R/W	0h	This feature is for debug purpose only. Software need to ensure the correct state of Device/IP before configuring this reset control for RCSS SPIB Data should be loaded as multibit. Write 3'b000: Reset is not asserted by SW. There could be another reset source which could reset the module. Write 3'b111 : Reset is asserted by SW

Copyright © 2025 Texas Instruments Incorporated

6.2.5.73 RCSS_MCASPA_RST_CTRL Register (Offset = 130h) [reset = X]

RCSS_MCASPA_RST_CTRL is shown in Figure 6-495 and described in Table 6-500.

Return to the Summary Table.

Figure 6-495. RCSS_MCASPA_RST_CTRL Register

31	30	29	28	27	26	25	24	23	22	21	20	19	18	17	16
RESERVED															
R/W-X															
15	14	13	12	11	10	9	8	7	6	5	4	3	2	1	0
RESERVED													assert		
R/W-X													R/W-0h		

Table 6-500. RCSS_MCASPA_RST_CTRL Register Field Descriptions

Bit	Field	Type	Reset	Description
31-3	RESERVED	R/W	X	
2-0	assert	R/W	0h	This feature is for debug purpose only. Software need to ensure the correct state of Device/IP before configuring this reset control for RCSS MCASPA Data should be loaded as multibit. Write 3'b000: Reset is not asserted by SW. There could be another reset source which could reset the module. Write 3'b111 : Reset is asserted by SW

Copyright © 2025 Texas Instruments Incorporated

6.2.5.74 RCSS_MCASPB_RST_CTRL Register (Offset = 134h) [reset = X]

RCSS_MCASPB_RST_CTRL is shown in Figure 6-496 and described in Table 6-501.

Return to the Summary Table.

Figure 6-496. RCSS_MCASPB_RST_CTRL Register

31	30	29	28	27	26	25	24	23	22	21	20	19	18	17	16
RESERVED															
R/W-X															
15	14	13	12	11	10	9	8	7	6	5	4	3	2	1	0
RESERVED													assert		
R/W-X													R/W-0h		

Table 6-501. RCSS_MCASPB_RST_CTRL Register Field Descriptions

Bit	Field	Type	Reset	Description
31-3	RESERVED	R/W	X	
2-0	assert	R/W	0h	This feature is for debug purpose only. Software need to ensure the correct state of Device/IP before configuring this reset control for RCSS MCASPB Data should be loaded as multibit. Write 3'b000: Reset is not asserted by SW. There could be another reset source which could reset the module. Write 3'b111 : Reset is asserted by SW

Copyright © 2025 Texas Instruments Incorporated

6.2.5.75 RCSS_MCASPC_RST_CTRL Register (Offset = 138h) [reset = X]

RCSS_MCASPC_RST_CTRL is shown in Figure 6-497 and described in Table 6-502.

Return to the Summary Table.

Figure 6-497. RCSS_MCASPC_RST_CTRL Register

31	30	29	28	27	26	25	24	23	22	21	20	19	18	17	16
RESERVED															
R/W-X															
15	14	13	12	11	10	9	8	7	6	5	4	3	2	1	0
RESERVED													assert		
R/W-X													R/W-0h		

Table 6-502. RCSS_MCASPC_RST_CTRL Register Field Descriptions

Bit	Field	Type	Reset	Description
31-3	RESERVED	R/W	X	
2-0	assert	R/W	0h	This feature is for debug purpose only. Software need to ensure the correct state of Device/IP before configuring this reset control for RCSS MCASPC Data should be loaded as multibit. Write 3'b000: Reset is not asserted by SW. There could be another reset source which could reset the module. Write 3'b111 : Reset is asserted by SW

Copyright © 2025 Texas Instruments Incorporated

6.2.5.76 RCSS_GIO_RST_CTRL Register (Offset = 13Ch) [reset = X]

RCSS_GIO_RST_CTRL is shown in Figure 6-498 and described in Table 6-503.

Return to the Summary Table.

Figure 6-498. RCSS_GIO_RST_CTRL Register

31	30	29	28	27	26	25	24	23	22	21	20	19	18	17	16
RESERVED															
R/W-X															
15	14	13	12	11	10	9	8	7	6	5	4	3	2	1	0
RESERVED													assert		
R/W-X													R/W-0h		

Table 6-503. RCSS_GIO_RST_CTRL Register Field Descriptions

Bit	Field	Type	Reset	Description
31-3	RESERVED	R/W	X	
2-0	assert	R/W	0h	This feature is for debug purpose only. Software need to ensure the correct state of Device/IP before configuring this reset control for RCSS GIO Data should be loaded as multibit. Write 3'b000: Reset is not asserted by SW. There could be another reset source which could reset the module. Write 3'b111 : Reset is asserted by SW

Copyright © 2025 Texas Instruments Incorporated

6.2.5.77 RCSS_EDMA_RST_CTRL Register (Offset = 140h) [reset = X]

RCSS_EDMA_RST_CTRL is shown in Figure 6-499 and described in Table 6-504.

Return to the Summary Table.

Figure 6-499. RCSS_EDMA_RST_CTRL Register

31	30	29	28	27	26	25	24
RESERVED							
R/W-X							
23	22	21	20	19	18	17	16
RESERVED							
R/W-X							
15	14	13	12	11	10	9	8
RESERVED	tptca1_assert			RESERVED	tptca0_assert		
R/W-X	R/W-0h			R/W-X	R/W-0h		
7	6	5	4	3	2	1	0
RESERVED	tpcca_assert			RESERVED	assert		
R/W-X	R/W-0h			R/W-X	R/W-0h		

Table 6-504. RCSS_EDMA_RST_CTRL Register Field Descriptions

Bit	Field	Type	Reset	Description
31-15	RESERVED	R/W	X	
14-12	tptca1_assert	R/W	0h	writing '111' will reset MSS_TPTCA0
11	RESERVED	R/W	X	
10-8	tptca0_assert	R/W	0h	writing '111' will reset MSS_TPCCA
7	RESERVED	R/W	X	
6-4	tpcca_assert	R/W	0h	This feature is for debug purpose only. Software need to ensure the correct state of Device/IP before configuring this reset control for RCSS EDMA Data should be loaded as multibit. Write 3'b000: Reset is not asserted by SW. There could be another reset source which could reset the module. Write 3'b111 : Reset is asserted by SW
3	RESERVED	R/W	X	
2-0	assert	R/W	0h	This feature is for debug purpose only. Software need to ensure the correct state of Device/IP before configuring this reset control for RCSS EDMA Data should be loaded as multibit. Write 3'b000: Reset is not asserted by SW. There could be another reset source which could reset the module. Write 3'b111 : Reset is asserted by SW

Copyright © 2025 Texas Instruments Incorporated

6.2.5.78 HW_SPARE_RW0 Register (Offset = FD0h) [reset = 0h]

HW_SPARE_RW0 is shown in Figure 6-500 and described in Table 6-505.

Return to the Summary Table.

Figure 6-500. HW_SPARE_RW0 Register

31	30	29	28	27	26	25	24	23	22	21	20	19	18	17	16	15	14	13	12	11	10	9	8	7	6	5	4	3	2	1	0
hw_spare_rw0																															
R/W-0h																															

Table 6-505. HW_SPARE_RW0 Register Field Descriptions

Bit	Field	Type	Reset	Description
31-0	hw_spare_rw0	R/W	0h	Reserved for HW R&D

Copyright © 2025 Texas Instruments Incorporated

6.2.5.79 HW_SPARE_RW1 Register (Offset = FD4h) [reset = 0h]

HW_SPARE_RW1 is shown in Figure 6-501 and described in Table 6-506.

Return to the Summary Table.

Figure 6-501. HW_SPARE_RW1 Register

31	30	29	28	27	26	25	24	23	22	21	20	19	18	17	16	15	14	13	12	11	10	9	8	7	6	5	4	3	2	1	0
hw_spare_rw1																															
R/W-0h																															

Table 6-506. HW_SPARE_RW1 Register Field Descriptions

Bit	Field	Type	Reset	Description
31-0	hw_spare_rw1	R/W	0h	Reserved for HW R&D

Copyright © 2025 Texas Instruments Incorporated

6.2.5.80 HW_SPARE_RW2 Register (Offset = FD8h) [reset = 0h]

HW_SPARE_RW2 is shown in Figure 6-502 and described in Table 6-507.

Return to the Summary Table.

Figure 6-502. HW_SPARE_RW2 Register

31	30	29	28	27	26	25	24	23	22	21	20	19	18	17	16	15	14	13	12	11	10	9	8	7	6	5	4	3	2	1	0
hw_spare_rw2																															
R/W-0h																															

Table 6-507. HW_SPARE_RW2 Register Field Descriptions

Bit	Field	Type	Reset	Description
31-0	hw_spare_rw2	R/W	0h	Reserved for HW R&D

Copyright © 2025 Texas Instruments Incorporated

6.2.5.81 HW_SPARE_RW3 Register (Offset = FDCh) [reset = 0h]

HW_SPARE_RW3 is shown in Figure 6-503 and described in Table 6-508.

Return to the Summary Table.

Figure 6-503. HW_SPARE_RW3 Register

31	30	29	28	27	26	25	24	23	22	21	20	19	18	17	16	15	14	13	12	11	10	9	8	7	6	5	4	3	2	1	0
hw_spare_rw3																															
R/W-0h																															

Table 6-508. HW_SPARE_RW3 Register Field Descriptions

Bit	Field	Type	Reset	Description
31-0	hw_spare_rw3	R/W	0h	Reserved for HW R&D

Copyright © 2025 Texas Instruments Incorporated

6.2.5.82 HW_SPARE_RO0 Register (Offset = FE0h) [reset = 0h]

HW_SPARE_RO0 is shown in Figure 6-504 and described in Table 6-509.

Return to the Summary Table.

Figure 6-504. HW_SPARE_RO0 Register

31	30	29	28	27	26	25	24	23	22	21	20	19	18	17	16	15	14	13	12	11	10	9	8	7	6	5	4	3	2	1	0
hw_spare_ro0																															
R-0h																															

Table 6-509. HW_SPARE_RO0 Register Field Descriptions

Bit	Field	Type	Reset	Description
31-0	hw_spare_ro0	R	0h	Reserved for HW R&D

Copyright © 2025 Texas Instruments Incorporated

6.2.5.83 HW_SPARE_RO1 Register (Offset = FE4h) [reset = 0h]

HW_SPARE_RO1 is shown in Figure 6-505 and described in Table 6-510.

Return to the Summary Table.

Figure 6-505. HW_SPARE_RO1 Register

31	30	29	28	27	26	25	24	23	22	21	20	19	18	17	16	15	14	13	12	11	10	9	8	7	6	5	4	3	2	1	0
hw_spare_ro1																															
R-0h																															

Table 6-510. HW_SPARE_RO1 Register Field Descriptions

Bit	Field	Type	Reset	Description
31-0	hw_spare_ro1	R	0h	Reserved for HW R&D

Copyright © 2025 Texas Instruments Incorporated

6.2.5.84 HW_SPARE_RO2 Register (Offset = FE8h) [reset = 0h]

HW_SPARE_RO2 is shown in Figure 6-506 and described in Table 6-511.

Return to the Summary Table.

Figure 6-506. HW_SPARE_RO2 Register

31	30	29	28	27	26	25	24	23	22	21	20	19	18	17	16	15	14	13	12	11	10	9	8	7	6	5	4	3	2	1	0
hw_spare_ro2																															
R-0h																															

Table 6-511. HW_SPARE_RO2 Register Field Descriptions

Bit	Field	Type	Reset	Description
31-0	hw_spare_ro2	R	0h	Reserved for HW R&D

Copyright © 2025 Texas Instruments Incorporated

6.2.5.85 HW_SPARE_RO3 Register (Offset = FECh) [reset = 0h]

HW_SPARE_RO3 is shown in Figure 6-507 and described in Table 6-512.

Return to the Summary Table.

Figure 6-507. HW_SPARE_RO3 Register

31	30	29	28	27	26	25	24	23	22	21	20	19	18	17	16	15	14	13	12	11	10	9	8	7	6	5	4	3	2	1	0
hw_spare_ro3																															
R-0h																															

Table 6-512. HW_SPARE_RO3 Register Field Descriptions

Bit	Field	Type	Reset	Description
31-0	hw_spare_ro3	R	0h	Reserved for HW R&D

Copyright © 2025 Texas Instruments Incorporated

6.2.5.86 HW_SPARE_WPH Register (Offset = FF0h) [reset = 0h]

HW_SPARE_WPH is shown in Figure 6-508 and described in Table 6-513.

Return to the Summary Table.

Figure 6-508. HW_SPARE_WPH Register

31	30	29	28	27	26	25	24	23	22	21	20	19	18	17	16	15	14	13	12	11	10	9	8	7	6	5	4	3	2	1	0
hw_spare_wph																															
R/W-0h																															

Table 6-513. HW_SPARE_WPH Register Field Descriptions

Bit	Field	Type	Reset	Description
31-0	hw_spare_wph	R/W	0h	Reserved for HW R&D

Copyright © 2025 Texas Instruments Incorporated

6.2.5.87 HW_SPARE_REC Register (Offset = FF4h) [reset = 0h]

HW_SPARE_REC is shown in Figure 6-509 and described in Table 6-514.

Return to the Summary Table.

Figure 6-509. HW_SPARE_REC Register

31	30	29	28	27	26	25	24
hw_spare_rec31	hw_spare_rec30	hw_spare_rec29	hw_spare_rec28	hw_spare_rec27	hw_spare_rec26	hw_spare_rec25	hw_spare_rec24
R/W-0h	R/W-0h	R/W-0h	R/W-0h	R/W-0h	R/W-0h	R/W-0h	R/W-0h
23	22	21	20	19	18	17	16
hw_spare_rec23	hw_spare_rec22	hw_spare_rec21	hw_spare_rec20	hw_spare_rec19	hw_spare_rec18	hw_spare_rec17	hw_spare_rec16
R/W-0h	R/W-0h	R/W-0h	R/W-0h	R/W-0h	R/W-0h	R/W-0h	R/W-0h
15	14	13	12	11	10	9	8
hw_spare_rec15	hw_spare_rec14	hw_spare_rec13	hw_spare_rec12	hw_spare_rec11	hw_spare_rec10	hw_spare_rec9	hw_spare_rec8
R/W-0h	R/W-0h	R/W-0h	R/W-0h	R/W-0h	R/W-0h	R/W-0h	R/W-0h
7	6	5	4	3	2	1	0
hw_spare_rec7	hw_spare_rec6	hw_spare_rec5	hw_spare_rec4	hw_spare_rec3	hw_spare_rec2	hw_spare_rec1	hw_spare_rec0
R/W-0h	R/W-0h	R/W-0h	R/W-0h	R/W-0h	R/W-0h	R/W-0h	R/W-0h

Table 6-514. HW_SPARE_REC Register Field Descriptions

Bit	Field	Type	Reset	Description
31	hw_spare_rec31	R/W	0h	Reserved for HW R&D
30	hw_spare_rec30	R/W	0h	Reserved for HW R&D
29	hw_spare_rec29	R/W	0h	Reserved for HW R&D
28	hw_spare_rec28	R/W	0h	Reserved for HW R&D
27	hw_spare_rec27	R/W	0h	Reserved for HW R&D
26	hw_spare_rec26	R/W	0h	Reserved for HW R&D
25	hw_spare_rec25	R/W	0h	Reserved for HW R&D
24	hw_spare_rec24	R/W	0h	Reserved for HW R&D
23	hw_spare_rec23	R/W	0h	Reserved for HW R&D
22	hw_spare_rec22	R/W	0h	Reserved for HW R&D
21	hw_spare_rec21	R/W	0h	Reserved for HW R&D
20	hw_spare_rec20	R/W	0h	Reserved for HW R&D
19	hw_spare_rec19	R/W	0h	Reserved for HW R&D
18	hw_spare_rec18	R/W	0h	Reserved for HW R&D
17	hw_spare_rec17	R/W	0h	Reserved for HW R&D
16	hw_spare_rec16	R/W	0h	Reserved for HW R&D
15	hw_spare_rec15	R/W	0h	Reserved for HW R&D
14	hw_spare_rec14	R/W	0h	Reserved for HW R&D
13	hw_spare_rec13	R/W	0h	Reserved for HW R&D
12	hw_spare_rec12	R/W	0h	Reserved for HW R&D
11	hw_spare_rec11	R/W	0h	Reserved for HW R&D

Copyright © 2025 Texas Instruments Incorporated

Table 6-514. HW_SPARE_REC Register Field Descriptions (continued)

Bit	Field	Type	Reset	Description
10	hw_spare_rec10	R/W	0h	Reserved for HW R&D
9	hw_spare_rec9	R/W	0h	Reserved for HW R&D
8	hw_spare_rec8	R/W	0h	Reserved for HW R&D
7	hw_spare_rec7	R/W	0h	Reserved for HW R&D
6	hw_spare_rec6	R/W	0h	Reserved for HW R&D
5	hw_spare_rec5	R/W	0h	Reserved for HW R&D
4	hw_spare_rec4	R/W	0h	Reserved for HW R&D
3	hw_spare_rec3	R/W	0h	Reserved for HW R&D
2	hw_spare_rec2	R/W	0h	Reserved for HW R&D
1	hw_spare_rec1	R/W	0h	Reserved for HW R&D
0	hw_spare_rec0	R/W	0h	Reserved for HW R&D

Copyright © 2025 Texas Instruments Incorporated

6.2.5.88 LOCK0_KICK0 Register (Offset = 1008h) [reset = 0h]

LOCK0_KICK0 is shown in Figure 6-510 and described in Table 6-515.

Return to the Summary Table.

- KICK0 component

Figure 6-510. LOCK0_KICK0 Register

31	30	29	28	27	26	25	24	23	22	21	20	19	18	17	16	15	14	13	12	11	10	9	8	7	6	5	4	3	2	1	0
LOCK0_kick0																															
R/W-0h																															

Table 6-515. LOCK0_KICK0 Register Field Descriptions

Bit	Field	Type	Reset	Description
31-0	LOCK0_kick0	R/W	0h	- KICK0 component

Copyright © 2025 Texas Instruments Incorporated

6.2.5.89 LOCK0_KICK1 Register (Offset = 100Ch) [reset = 0h]

LOCK0_KICK1 is shown in Figure 6-511 and described in Table 6-516.

Return to the Summary Table.

- KICK1 component

Figure 6-511. LOCK0_KICK1 Register

31	30	29	28	27	26	25	24	23	22	21	20	19	18	17	16	15	14	13	12	11	10	9	8	7	6	5	4	3	2	1	0
LOCK0_kick1																															
R/W-0h																															

Table 6-516. LOCK0_KICK1 Register Field Descriptions

Bit	Field	Type	Reset	Description
31-0	LOCK0_kick1	R/W	0h	- KICK1 component

Copyright © 2025 Texas Instruments Incorporated

6.2.5.90 intr_raw_status Register (Offset = 1010h) [reset = X]

intr_raw_status is shown in Figure 6-512 and described in Table 6-517.

Return to the Summary Table.

Interrupt Raw Status/Set Register

Figure 6-512. intr_raw_status Register

31	30	29	28	27	26	25	24
RESERVED							
R/W-X							
23	22	21	20	19	18	17	16
RESERVED							
R/W-X							
15	14	13	12	11	10	9	8
RESERVED							
R/W-X							
7	6	5	4	3	2	1	0
RESERVED				proxy_err	kick_err	addr_err	prot_err
R/W-X				R/W1S-0h	R/W1S-0h	R/W1S-0h	R/W1S-0h

Table 6-517. intr_raw_status Register Field Descriptions

Bit	Field	Type	Reset	Description
31-4	RESERVED	R/W	X	
3	proxy_err	R/W1S	0h	Proxy0 access violation error. Raw status is read. Write a 1 to set the status. Writing a 0 has no effect.
2	kick_err	R/W1S	0h	Kick access violation error. Raw status is read. Write a 1 to set the status. Writing a 0 has no effect.
1	addr_err	R/W1S	0h	Addressing violation error. Raw status is read. Write a 1 to set the status. Writing a 0 has no effect.
0	prot_err	R/W1S	0h	Protection violation error. Raw status is read. Write a 1 to set the status. Writing a 0 has no effect.

Copyright © 2025 Texas Instruments Incorporated

6.2.5.91 intr_enabled_status_clear Register (Offset = 1014h) [reset = X]

intr_enabled_status_clear is shown in Figure 6-513 and described in Table 6-518.

Return to the Summary Table.

Interrupt Enabled Status/Clear register

Figure 6-513. intr_enabled_status_clear Register

31	30	29	28	27	26	25	24
RESERVED							
R/W-X							
23	22	21	20	19	18	17	16
RESERVED							
R/W-X							
15	14	13	12	11	10	9	8
RESERVED							
R/W-X							
7	6	5	4	3	2	1	0
RESERVED				enabled_proxy_err	enabled_kick_err	enabled_addr_err	enabled_prot_err
R/W-X				R/W1C-0h	R/W1C-0h	R/W1C-0h	R/W1C-0h

Table 6-518. intr_enabled_status_clear Register Field Descriptions

Bit	Field	Type	Reset	Description
31-4	RESERVED	R/W	X	
3	enabled_proxy_err	R/W1C	0h	Proxy0 access violation error. Enabled status is read. Write a 1 to clear the status. Writing a 0 has no effect.
2	enabled_kick_err	R/W1C	0h	Kick access violation error. Enabled status is read. Write a 1 to clear the status. Writing a 0 has no effect.
1	enabled_addr_err	R/W1C	0h	Addressing violation error. Enabled status is read. Write a 1 to clear the status. Writing a 0 has no effect.
0	enabled_prot_err	R/W1C	0h	Protection violation error. Enabled status is read. Write a 1 to clear the status. Writing a 0 has no effect.

Copyright © 2025 Texas Instruments Incorporated

6.2.5.92 intr_enable Register (Offset = 1018h) [reset = X]

intr_enable is shown in Figure 6-514 and described in Table 6-519.

Return to the Summary Table.

Interrupt Enable register

Figure 6-514. intr_enable Register

31	30	29	28	27	26	25	24
RESERVED							
R/W-X							
23	22	21	20	19	18	17	16
RESERVED							
R/W-X							
15	14	13	12	11	10	9	8
RESERVED							
R/W-X							
7	6	5	4	3	2	1	0
RESERVED				proxy_err_en	kick_err_en	addr_err_en	prot_err_en
R/W-X				R/W1S-0h	R/W1S-0h	R/W1S-0h	R/W1S-0h

Table 6-519. intr_enable Register Field Descriptions

Bit	Field	Type	Reset	Description
31-4	RESERVED	R/W	X	
3	proxy_err_en	R/W1S	0h	Proxy0 access violation error enable. Write a 1 to set the enable. Writing a 0 has no effect.
2	kick_err_en	R/W1S	0h	Kick access violation error enable. Write a 1 to set the enable. Writing a 0 has no effect.
1	addr_err_en	R/W1S	0h	Addressing violation error enable. Write a 1 to set the enable. Writing a 0 has no effect.
0	prot_err_en	R/W1S	0h	Protection violation error enable. Write a 1 to set the enable. Writing a 0 has no effect.

Copyright © 2025 Texas Instruments Incorporated

6.2.5.93 intr_enable_clear Register (Offset = 101Ch) [reset = X]

intr_enable_clear is shown in Figure 6-515 and described in Table 6-520.

Return to the Summary Table.

Interrupt Enable Clear register

Figure 6-515. intr_enable_clear Register

31	30	29	28	27	26	25	24
RESERVED							
R/W-X							
23	22	21	20	19	18	17	16
RESERVED							
R/W-X							
15	14	13	12	11	10	9	8
RESERVED							
R/W-X							
7	6	5	4	3	2	1	0
RESERVED				proxy_err_en_clr	kick_err_en_clr	addr_err_en_clr	prot_err_en_clr
R/W-X				R/W1C-0h	R/W1C-0h	R/W1C-0h	R/W1C-0h

Table 6-520. intr_enable_clear Register Field Descriptions

Bit	Field	Type	Reset	Description
31-4	RESERVED	R/W	X	
3	proxy_err_en_clr	R/W1C	0h	Proxy0 access violation error enable clear. Write a 1 to clear the enable. Writing a 0 has no effect.
2	kick_err_en_clr	R/W1C	0h	Kick access violation error enable clear. Write a 1 to clear the enable. Writing a 0 has no effect.
1	addr_err_en_clr	R/W1C	0h	Addressing violation error enable clear. Write a 1 to clear the enable. Writing a 0 has no effect.
0	prot_err_en_clr	R/W1C	0h	Protection violation error enable clear. Write a 1 to clear the enable. Writing a 0 has no effect.

Copyright © 2025 Texas Instruments Incorporated

6.2.5.94 eoi Register (Offset = 1020h) [reset = X]

eoi is shown in Figure 6-516 and described in Table 6-521.

Return to the Summary Table.

EOI register

Figure 6-516. eoi Register

31	30	29	28	27	26	25	24	23	22	21	20	19	18	17	16
RESERVED															
R/W-X															
15	14	13	12	11	10	9	8	7	6	5	4	3	2	1	0
RESERVED								eoi_vector							
R/W-X								R/W-0h							

Table 6-521. eoi Register Field Descriptions

Bit	Field	Type	Reset	Description
31-8	RESERVED	R/W	X	
7-0	eoi_vector	R/W	0h	EOI vector value. Write this with interrupt distribution value in the chip.

Copyright © 2025 Texas Instruments Incorporated

6.2.5.95 fault_address Register (Offset = 1024h) [reset = 0h]

fault_address is shown in Figure 6-517 and described in Table 6-522.

Return to the Summary Table.

Fault Address register

Figure 6-517. fault_address Register

31	30	29	28	27	26	25	24	23	22	21	20	19	18	17	16	15	14	13	12	11	10	9	8	7	6	5	4	3	2	1	0
fault_addr																															
R-0h																															

Table 6-522. fault_address Register Field Descriptions

Bit	Field	Type	Reset	Description
31-0	fault_addr	R	0h	Fault Address.

Copyright © 2025 Texas Instruments Incorporated

6.2.5.96 fault_type_status Register (Offset = 1028h) [reset = X]

fault_type_status is shown in Figure 6-518 and described in Table 6-523.

Return to the Summary Table.

Fault Type Status register

Figure 6-518. fault_type_status Register

31	30	29	28	27	26	25	24
RESERVED							
R-X							
23	22	21	20	19	18	17	16
RESERVED							
R-X							
15	14	13	12	11	10	9	8
RESERVED							
R-X							
7	6	5	4	3	2	1	0
RESERVED	fault_ns	fault_type					
R-X	R-0h	R-0h					

Table 6-523. fault_type_status Register Field Descriptions

Bit	Field	Type	Reset	Description
31-7	RESERVED	R	X	
6	fault_ns	R	0h	Non-secure access.
5-0	fault_type	R	0h	Fault Type 10_0000 = Supervisor read fault - priv = 1 dir = 1 dtype ! = 1 01_0000 = Supervisor write fault - priv = 1 dir = 0 00_1000 = Supervisor execute fault - priv = 1 dir = 1 dtype = 1 00_0100 = User read fault - priv = 0 dir = 1 dtype = 1 00_0010 = User write fault - priv = 0 dir = 0 00_0001 = User execute fault - priv = 0 dir = 1 dtype = 1 00_0000 = No fault

Copyright © 2025 Texas Instruments Incorporated

6.2.5.97 fault_attr_status Register (Offset = 102Ch) [reset = 0h]

fault_attr_status is shown in Figure 6-519 and described in Table 6-524.

Return to the Summary Table.

Fault Attribute Status register

Figure 6-519. fault_attr_status Register

31	30	29	28	27	26	25	24	23	22	21	20	19	18	17	16
fault_xid												fault_routeid			
R-0h												R-0h			
15	14	13	12	11	10	9	8	7	6	5	4	3	2	1	0
fault_routeid								fault_privid							
R-0h								R-0h							

Table 6-524. fault_attr_status Register Field Descriptions

Bit	Field	Type	Reset	Description
31-20	fault_xid	R	0h	XID.
19-8	fault_routeid	R	0h	Route ID.
7-0	fault_privid	R	0h	Privilege ID.

Copyright © 2025 Texas Instruments Incorporated

6.2.5.98 fault_clear Register (Offset = 1030h) [reset = X]

fault_clear is shown in Figure 6-520 and described in Table 6-525.

Return to the Summary Table.

Fault Clear register

Figure 6-520. fault_clear Register

31	30	29	28	27	26	25	24
RESERVED							
W-X							
23	22	21	20	19	18	17	16
RESERVED							
W-X							
15	14	13	12	11	10	9	8
RESERVED							
W-X							
7	6	5	4	3	2	1	0
RESERVED							fault_clr
W-X							W-0h

Table 6-525. fault_clear Register Field Descriptions

Bit	Field	Type	Reset	Description
31-1	RESERVED	W	X	
0	fault_clr	W	0h	Fault clear. Writing a 1 clears the current fault. Writing a 0 has no effect.

6.2.6 DSS_CTRL Registers

Table 6-526 lists the DSS_CTRL registers. All register offset addresses not listed in Table 6-526 should be considered as reserved locations and the register contents should not be modified.

Table 6-526. DSS_CTRL Registers

Offset	Acronym	Register Name	Section
0h	PID	PID register	PID Register (Offset = 0h) [reset = 61800213h]
14h	DSS_SW_INT		DSS_SW_INT Register (Offset = 14h) [reset = X]
18h	DSS_TPCC_A_ERRAGG_MASK		DSS_TPCC_A_ERRAGG_MASK Register (Offset = 18h) [reset = X]
1Ch	DSS_TPCC_A_ERRAGG_STATUS		DSS_TPCC_A_ERRAGG_STATUS Register (Offset = 1Ch) [reset = X]
20h	DSS_TPCC_A_ERRAGG_STATUS_RAW		DSS_TPCC_A_ERRAGG_STATUS_RAW Register (Offset = 20h) [reset = X]

Copyright © 2025 Texas Instruments Incorporated

Table 6-526. DSS_CTRL Registers (continued)

Offset	Acronym	Register Name	Section
24h	DSS_TPCC_A_INTAGG_MASK		DSS_TPCC_A_INTAGG_MASK Register (Offset = 24h) [reset = X]
28h	DSS_TPCC_A_INTAGG_STATUS		DSS_TPCC_A_INTAGG_STATUS Register (Offset = 28h) [reset = X]
2Ch	DSS_TPCC_A_INTAGG_STATUS_RAW		DSS_TPCC_A_INTAGG_STATUS_RAW Register (Offset = 2Ch) [reset = X]
30h	DSS_TPCC_B_ERRAGG_MASK		DSS_TPCC_B_ERRAGG_MASK Register (Offset = 30h) [reset = X]
34h	DSS_TPCC_B_ERRAGG_STATUS		DSS_TPCC_B_ERRAGG_STATUS Register (Offset = 34h) [reset = X]
38h	DSS_TPCC_B_ERRAGG_STATUS_RAW		DSS_TPCC_B_ERRAGG_STATUS_RAW Register (Offset = 38h) [reset = X]
3Ch	DSS_TPCC_B_INTAGG_MASK		DSS_TPCC_B_INTAGG_MASK Register (Offset = 3Ch) [reset = X]
40h	DSS_TPCC_B_INTAGG_STATUS		DSS_TPCC_B_INTAGG_STATUS Register (Offset = 40h) [reset = X]
44h	DSS_TPCC_B_INTAGG_STATUS_RAW		DSS_TPCC_B_INTAGG_STATUS_RAW Register (Offset = 44h) [reset = X]
48h	DSS_TPCC_C_ERRAGG_MASK		DSS_TPCC_C_ERRAGG_MASK Register (Offset = 48h) [reset = X]
4Ch	DSS_TPCC_C_ERRAGG_STATUS		DSS_TPCC_C_ERRAGG_STATUS Register (Offset = 4Ch) [reset = X]
50h	DSS_TPCC_C_ERRAGG_STATUS_RAW		DSS_TPCC_C_ERRAGG_STATUS_RAW Register (Offset = 50h) [reset = X]
54h	DSS_TPCC_C_INTAGG_MASK		DSS_TPCC_C_INTAGG_MASK Register (Offset = 54h) [reset = X]
58h	DSS_TPCC_C_INTAGG_STATUS		DSS_TPCC_C_INTAGG_STATUS Register (Offset = 58h) [reset = X]

Copyright © 2025 Texas Instruments Incorporated

Table 6-526. DSS_CTRL Registers (continued)

Offset	Acronym	Register Name	Section
5Ch	DSS_TPCC_C_INTAGG_STATUS_RAW		DSS_TPCC_C_INTAGG_STATUS_RAW Register (Offset = 5Ch) [reset = X]
60h	DSS_TPCC_MEMINIT_START		DSS_TPCC_MEMINIT_START Register (Offset = 60h) [reset = X]
64h	DSS_TPCC_MEMINIT_STATUS		DSS_TPCC_MEMINIT_STATUS Register (Offset = 64h) [reset = X]
68h	DSS_TPCC_MEMINIT_DONE		DSS_TPCC_MEMINIT_DONE Register (Offset = 68h) [reset = X]
6Ch	DSS_DSP_L2RAM_PARITY_CTRL		DSS_DSP_L2RAM_PARITY_CTRL Register (Offset = 6Ch) [reset = X]
70h	DSS_DSP_L2RAM_PARITY_ERR_STATUS_VB0		DSS_DSP_L2RAM_PARITY_ERR_STATUS_VB0 Register (Offset = 70h) [reset = X]
74h	DSS_DSP_L2RAM_PARITY_ERR_STATUS_VB1		DSS_DSP_L2RAM_PARITY_ERR_STATUS_VB1 Register (Offset = 74h) [reset = X]
78h	DSS_DSP_L2RAM_PARITY_ERR_STATUS_VB2		DSS_DSP_L2RAM_PARITY_ERR_STATUS_VB2 Register (Offset = 78h) [reset = X]
7Ch	DSS_DSP_L2RAM_PARITY_ERR_STATUS_VB3		DSS_DSP_L2RAM_PARITY_ERR_STATUS_VB3 Register (Offset = 7Ch) [reset = X]
80h	DSS_DSP_L2RAM_MEMINIT_START		DSS_DSP_L2RAM_MEMINIT_START Register (Offset = 80h) [reset = X]
84h	DSS_DSP_L2RAM_MEMINIT_STATUS		DSS_DSP_L2RAM_MEMINIT_STATUS Register (Offset = 84h) [reset = X]
88h	DSS_DSP_L2RAM_MEMINIT_DONE		DSS_DSP_L2RAM_MEMINIT_DONE Register (Offset = 88h) [reset = X]
8Ch	DSS_DSP_L2RAM_PARITY_MEMINIT_START		DSS_DSP_L2RAM_PARITY_MEMINIT_START Register (Offset = 8Ch) [reset = X]

Copyright © 2025 Texas Instruments Incorporated

Table 6-526. DSS_CTRL Registers (continued)

Offset	Acronym	Register Name	Section
90h	DSS_DSP_L2RAM_PARITY_MEMINIT_STATUS		DSS_DSP_L2RAM_PARITY_MEMINIT_STATUS Register (Offset = 90h) [reset = X]
94h	DSS_DSP_L2RAM_PARITY_MEMINIT_DONE		DSS_DSP_L2RAM_PARITY_MEMINIT_DONE Register (Offset = 94h) [reset = X]
98h	DSS_L3RAM_MEMINIT_START		DSS_L3RAM_MEMINIT_START Register (Offset = 98h) [reset = X]
9Ch	DSS_L3RAM_MEMINIT_STATUS		DSS_L3RAM_MEMINIT_STATUS Register (Offset = 9Ch) [reset = X]
A0h	DSS_L3RAM_MEMINIT_DONE		DSS_L3RAM_MEMINIT_DONE Register (Offset = A0h) [reset = X]
B0h	DSS_MAILBOX_MEMINIT_START		DSS_MAILBOX_MEMINIT_START Register (Offset = B0h) [reset = X]
B4h	DSS_MAILBOX_MEMINIT_STATUS		DSS_MAILBOX_MEMINIT_STATUS Register (Offset = B4h) [reset = X]
B8h	DSS_MAILBOX_MEMINIT_DONE		DSS_MAILBOX_MEMINIT_DONE Register (Offset = B8h) [reset = X]
BCh	DSS_TPCC_A_PARITY_CTRL		DSS_TPCC_A_PARITY_CTRL Register (Offset = BCh) [reset = X]
C0h	DSS_TPCC_B_PARITY_CTRL		DSS_TPCC_B_PARITY_CTRL Register (Offset = C0h) [reset = X]
C4h	DSS_TPCC_C_PARITY_CTRL		DSS_TPCC_C_PARITY_CTRL Register (Offset = C4h) [reset = X]
C8h	DSS_TPCC_A_PARITY_STATUS		DSS_TPCC_A_PARITY_STATUS Register (Offset = C8h) [reset = X]
CCh	DSS_TPCC_B_PARITY_STATUS		DSS_TPCC_B_PARITY_STATUS Register (Offset = CCh) [reset = X]
D0h	DSS_TPCC_C_PARITY_STATUS		DSS_TPCC_C_PARITY_STATUS Register (Offset = D0h) [reset = X]

Copyright © 2025 Texas Instruments Incorporated

Table 6-526. DSS_CTRL Registers (continued)

Offset	Acronym	Register Name	Section
D4h	TPTC_DBS_CONFIG		TPTC_DBS_CONFIG Register (Offset = D4h) [reset = X]
D8h	DSS_DSP_BOOTCFG		DSS_DSP_BOOTCFG Register (Offset = D8h) [reset = X]
DCh	DSS_DSP_NMI_GATE		DSS_DSP_NMI_GATE Register (Offset = DCh) [reset = X]
E0h	DSS_PBIST_KEY_RESET		DSS_PBIST_KEY_RESET Register (Offset = E0h) [reset = X]
E4h	DSS_PBIST_REG0		DSS_PBIST_REG0 Register (Offset = E4h) [reset = 0h]
E8h	DSS_PBIST_REG1		DSS_PBIST_REG1 Register (Offset = E8h) [reset = 0h]
ECh	DSS_TPTC_BOUNDARY_CFG0		DSS_TPTC_BOUNDARY_CFG0 Register (Offset = ECh) [reset = X]
F0h	DSS_TPTC_BOUNDARY_CFG1		DSS_TPTC_BOUNDARY_CFG1 Register (Offset = F0h) [reset = X]
F4h	DSS_TPTC_BOUNDARY_CFG2		DSS_TPTC_BOUNDARY_CFG2 Register (Offset = F4h) [reset = X]
F8h	DSS_TPTC_XID_REORDER_CFG0		DSS_TPTC_XID_REORDER_CFG0 Register (Offset = F8h) [reset = X]
FCh	DSS_TPTC_XID_REORDER_CFG1		DSS_TPTC_XID_REORDER_CFG1 Register (Offset = FCh) [reset = X]
100h	DSS_TPTC_XID_REORDER_CFG2		DSS_TPTC_XID_REORDER_CFG2 Register (Offset = 100h) [reset = X]
108h	ESM_GATING0		ESM_GATING0 Register (Offset = 108h) [reset = FFFFFFFFh]
10Ch	ESM_GATING1		ESM_GATING1 Register (Offset = 10Ch) [reset = FFFFFFFFh]
110h	ESM_GATING2		ESM_GATING2 Register (Offset = 110h) [reset = FFFFFFFFh]

Copyright © 2025 Texas Instruments Incorporated

Table 6-526. DSS_CTRL Registers (continued)

Offset	Acronym	Register Name	Section
114h	ESM_GATING3		ESM_GATING3 Register (Offset = 114h) [reset = FFFFFFFFh]
560h	DSS_PERIPH_ERRAGG_MASK0		DSS_PERIPH_ERRAGG_MASK0 Register (Offset = 560h) [reset = X]
564h	DSS_PERIPH_ERRAGG_STATUS0		DSS_PERIPH_ERRAGG_STATUS0 Register (Offset = 564h) [reset = X]
568h	DSS_PERIPH_ERRAGG_STATUS_RAW0		DSS_PERIPH_ERRAGG_STATUS_RAW0 Register (Offset = 568h) [reset = X]
56Ch	DSS_DSP_MBOX_WRITE_DONE		DSS_DSP_MBOX_WRITE_DONE Register (Offset = 56Ch) [reset = X]
570h	DSS_DSP_MBOX_READ_REQ		DSS_DSP_MBOX_READ_REQ Register (Offset = 570h) [reset = X]
574h	DSS_DSP_MBOX_READ_DONE		DSS_DSP_MBOX_READ_DONE Register (Offset = 574h) [reset = X]
578h	DSS_WDT_EVENT_CAPTURE_SEL		DSS_WDT_EVENT_CAPTURE_SEL Register (Offset = 578h) [reset = X]
57Ch	DSS_RTIA_EVENT_CAPTURE_SEL		DSS_RTIA_EVENT_CAPTURE_SEL Register (Offset = 57Ch) [reset = X]
580h	DSS_RTIB_EVENT_CAPTURE_SEL		DSS_RTIB_EVENT_CAPTURE_SEL Register (Offset = 580h) [reset = X]
584h	DBG_ACK_CPU_CTRL		DBG_ACK_CPU_CTRL Register (Offset = 584h) [reset = X]
588h	DBG_ACK_CTL0		DBG_ACK_CTL0 Register (Offset = 588h) [reset = X]
58Ch	DBG_ACK_CTL1		DBG_ACK_CTL1 Register (Offset = 58Ch) [reset = X]
590h	DSS_DSP_INT_SEL		DSS_DSP_INT_SEL Register (Offset = 590h) [reset = X]
594h	DSS_CBUFF_TRIGGER_SEL		DSS_CBUFF_TRIGGER_SEL Register (Offset = 594h) [reset = X]

Copyright © 2025 Texas Instruments Incorporated

Table 6-526. DSS_CTRL Registers (continued)

Offset	Acronym	Register Name	Section
800h	DSS_BUS_SAFETY_CTRL		DSS_BUS_SAFETY_CTRL Register (Offset = 800h) [reset = X]
804h	DSS_BUS_SAFETY_SEC_ERR_STAT0		DSS_BUS_SAFETY_SEC_ERR_STAT0 Register (Offset = 804h) [reset = X]
808h	DSS_BUS_SAFETY_SEC_ERR_STAT1		DSS_BUS_SAFETY_SEC_ERR_STAT1 Register (Offset = 808h) [reset = X]
80Ch	DSS_DSP_MDMA_BUS_SAFETY_CTRL		DSS_DSP_MDMA_BUS_SAFETY_CTRL Register (Offset = 80Ch) [reset = X]
810h	DSS_DSP_MDMA_BUS_SAFETY_FI		DSS_DSP_MDMA_BUS_SAFETY_FI Register (Offset = 810h) [reset = X]
814h	DSS_DSP_MDMA_BUS_SAFETY_ERR		DSS_DSP_MDMA_BUS_SAFETY_ERR Register (Offset = 814h) [reset = 0h]
818h	DSS_DSP_MDMA_BUS_SAFETY_ERR_STAT_DATA0		DSS_DSP_MDMA_BUS_SAFETY_ERR_STAT_DATA0 Register (Offset = 818h) [reset = 0h]
81Ch	DSS_DSP_MDMA_BUS_SAFETY_ERR_STAT_DATA1		DSS_DSP_MDMA_BUS_SAFETY_ERR_STAT_DATA1 Register (Offset = 81Ch) [reset = 0h]
820h	DSS_DSP_MDMA_BUS_SAFETY_ERR_STAT_CMD		DSS_DSP_MDMA_BUS_SAFETY_ERR_STAT_CMD Register (Offset = 820h) [reset = 0h]
824h	DSS_DSP_MDMA_BUS_SAFETY_ERR_STAT_WRITE		DSS_DSP_MDMA_BUS_SAFETY_ERR_STAT_WRITE Register (Offset = 824h) [reset = 0h]
828h	DSS_DSP_MDMA_BUS_SAFETY_ERR_STAT_READ		DSS_DSP_MDMA_BUS_SAFETY_ERR_STAT_READ Register (Offset = 828h) [reset = 0h]
82Ch	DSS_DSP_MDMA_BUS_SAFETY_ERR_STAT_WRITERESP		DSS_DSP_MDMA_BUS_SAFETY_ERR_STAT_WRITERESP Register (Offset = 82Ch) [reset = 0h]
830h	DSS_L3_BANKA_BUS_SAFETY_CTRL		DSS_L3_BANKA_BUS_SAFETY_CTRL Register (Offset = 830h) [reset = X]

Copyright © 2025 Texas Instruments Incorporated

Table 6-526. DSS_CTRL Registers (continued)

Offset	Acronym	Register Name	Section
834h	DSS_L3_BANKA_BUS_SAFETY_FI		DSS_L3_BANKA_BUS_SAFETY_FI Register (Offset = 834h) [reset = X]
838h	DSS_L3_BANKA_BUS_SAFETY_ERR		DSS_L3_BANKA_BUS_SAFETY_ERR Register (Offset = 838h) [reset = 0h]
83Ch	DSS_L3_BANKA_BUS_SAFETY_ERR_STAT_DATA0		DSS_L3_BANKA_BUS_SAFETY_ERR_STAT_DATA0 Register (Offset = 83Ch) [reset = 0h]
840h	DSS_L3_BANKA_BUS_SAFETY_ERR_STAT_DATA1		DSS_L3_BANKA_BUS_SAFETY_ERR_STAT_DATA1 Register (Offset = 840h) [reset = 0h]
844h	DSS_L3_BANKA_BUS_SAFETY_ERR_STAT_CMD		DSS_L3_BANKA_BUS_SAFETY_ERR_STAT_CMD Register (Offset = 844h) [reset = 0h]
848h	DSS_L3_BANKA_BUS_SAFETY_ERR_STAT_WRITE		DSS_L3_BANKA_BUS_SAFETY_ERR_STAT_WRITE Register (Offset = 848h) [reset = 0h]
84Ch	DSS_L3_BANKA_BUS_SAFETY_ERR_STAT_READ		DSS_L3_BANKA_BUS_SAFETY_ERR_STAT_READ Register (Offset = 84Ch) [reset = 0h]
850h	DSS_L3_BANKA_BUS_SAFETY_ERR_STAT_WRITERESP		DSS_L3_BANKA_BUS_SAFETY_ERR_STAT_WRITERESP Register (Offset = 850h) [reset = 0h]
854h	DSS_L3_BANKB_BUS_SAFETY_CTRL		DSS_L3_BANKB_BUS_SAFETY_CTRL Register (Offset = 854h) [reset = X]
858h	DSS_L3_BANKB_BUS_SAFETY_FI		DSS_L3_BANKB_BUS_SAFETY_FI Register (Offset = 858h) [reset = X]
85Ch	DSS_L3_BANKB_BUS_SAFETY_ERR		DSS_L3_BANKB_BUS_SAFETY_ERR Register (Offset = 85Ch) [reset = 0h]
860h	DSS_L3_BANKB_BUS_SAFETY_ERR_STAT_DATA0		DSS_L3_BANKB_BUS_SAFETY_ERR_STAT_DATA0 Register (Offset = 860h) [reset = 0h]
864h	DSS_L3_BANKB_BUS_SAFETY_ERR_STAT_DATA1		DSS_L3_BANKB_BUS_SAFETY_ERR_STAT_DATA1 Register (Offset = 864h) [reset = 0h]

Copyright © 2025 Texas Instruments Incorporated

Table 6-526. DSS_CTRL Registers (continued)

Offset	Acronym	Register Name	Section
868h	DSS_L3_BANKB_BUS_SAFETY_ERR_STAT_CMD		DSS_L3_BANKB_BUS_SAFETY_ERR_STAT_CMD Register (Offset = 868h) [reset = 0h]
86Ch	DSS_L3_BANKB_BUS_SAFETY_ERR_STAT_WRITE		DSS_L3_BANKB_BUS_SAFETY_ERR_STAT_WRITE Register (Offset = 86Ch) [reset = 0h]
870h	DSS_L3_BANKB_BUS_SAFETY_ERR_STAT_READ		DSS_L3_BANKB_BUS_SAFETY_ERR_STAT_READ Register (Offset = 870h) [reset = 0h]
874h	DSS_L3_BANKB_BUS_SAFETY_ERR_STAT_WRITERESP		DSS_L3_BANKB_BUS_SAFETY_ERR_STAT_WRITERESP Register (Offset = 874h) [reset = 0h]
878h	DSS_L3_BANKC_BUS_SAFETY_CTRL		DSS_L3_BANKC_BUS_SAFETY_CTRL Register (Offset = 878h) [reset = X]
87Ch	DSS_L3_BANKC_BUS_SAFETY_FI		DSS_L3_BANKC_BUS_SAFETY_FI Register (Offset = 87Ch) [reset = X]
880h	DSS_L3_BANKC_BUS_SAFETY_ERR		DSS_L3_BANKC_BUS_SAFETY_ERR Register (Offset = 880h) [reset = 0h]
884h	DSS_L3_BANKC_BUS_SAFETY_ERR_STAT_DATA0		DSS_L3_BANKC_BUS_SAFETY_ERR_STAT_DATA0 Register (Offset = 884h) [reset = 0h]
888h	DSS_L3_BANKC_BUS_SAFETY_ERR_STAT_DATA1		DSS_L3_BANKC_BUS_SAFETY_ERR_STAT_DATA1 Register (Offset = 888h) [reset = 0h]
88Ch	DSS_L3_BANKC_BUS_SAFETY_ERR_STAT_CMD		DSS_L3_BANKC_BUS_SAFETY_ERR_STAT_CMD Register (Offset = 88Ch) [reset = 0h]
890h	DSS_L3_BANKC_BUS_SAFETY_ERR_STAT_WRITE		DSS_L3_BANKC_BUS_SAFETY_ERR_STAT_WRITE Register (Offset = 890h) [reset = 0h]
894h	DSS_L3_BANKC_BUS_SAFETY_ERR_STAT_READ		DSS_L3_BANKC_BUS_SAFETY_ERR_STAT_READ Register (Offset = 894h) [reset = 0h]

Copyright © 2025 Texas Instruments Incorporated

Table 6-526. DSS_CTRL Registers (continued)

Offset	Acronym	Register Name	Section
898h	DSS_L3_BANKC_BUS_SAFETY_ERR_STAT_WRITERESP		DSS_L3_BANKC_BUS_SAFETY_ERR_STAT_WRITERESP Register (Offset = 898h) [reset = 0h]
89Ch	DSS_L3_BANKD_BUS_SAFETY_CTRL		DSS_L3_BANKD_BUS_SAFETY_CTRL Register (Offset = 89Ch) [reset = X]
8A0h	DSS_L3_BANKD_BUS_SAFETY_FI		DSS_L3_BANKD_BUS_SAFETY_FI Register (Offset = 8A0h) [reset = X]
8A4h	DSS_L3_BANKD_BUS_SAFETY_ERR		DSS_L3_BANKD_BUS_SAFETY_ERR Register (Offset = 8A4h) [reset = 0h]
8A8h	DSS_L3_BANKD_BUS_SAFETY_ERR_STAT_DATA0		DSS_L3_BANKD_BUS_SAFETY_ERR_STAT_DATA0 Register (Offset = 8A8h) [reset = 0h]
8ACh	DSS_L3_BANKD_BUS_SAFETY_ERR_STAT_DATA1		DSS_L3_BANKD_BUS_SAFETY_ERR_STAT_DATA1 Register (Offset = 8ACh) [reset = 0h]
8B0h	DSS_L3_BANKD_BUS_SAFETY_ERR_STAT_CMD		DSS_L3_BANKD_BUS_SAFETY_ERR_STAT_CMD Register (Offset = 8B0h) [reset = 0h]
8B4h	DSS_L3_BANKD_BUS_SAFETY_ERR_STAT_WRITE		DSS_L3_BANKD_BUS_SAFETY_ERR_STAT_WRITE Register (Offset = 8B4h) [reset = 0h]
8B8h	DSS_L3_BANKD_BUS_SAFETY_ERR_STAT_READ		DSS_L3_BANKD_BUS_SAFETY_ERR_STAT_READ Register (Offset = 8B8h) [reset = 0h]
8BCh	DSS_L3_BANKD_BUS_SAFETY_ERR_STAT_WRITERESP		DSS_L3_BANKD_BUS_SAFETY_ERR_STAT_WRITERESP Register (Offset = 8BCh) [reset = 0h]
8C0h	DSS_DSP_SDMA_BUS_SAFETY_CTRL		DSS_DSP_SDMA_BUS_SAFETY_CTRL Register (Offset = 8C0h) [reset = X]
8C4h	DSS_DSP_SDMA_BUS_SAFETY_FI		DSS_DSP_SDMA_BUS_SAFETY_FI Register (Offset = 8C4h) [reset = X]
8C8h	DSS_DSP_SDMA_BUS_SAFETY_ERR		DSS_DSP_SDMA_BUS_SAFETY_ERR Register (Offset = 8C8h) [reset = 0h]

Copyright © 2025 Texas Instruments Incorporated

Table 6-526. DSS_CTRL Registers (continued)

Offset	Acronym	Register Name	Section
8CCh	DSS_DSP_SDMA_BUS_SAFETY_ERR_STAT_DATA0		DSS_DSP_SDMA_BUS_SAFETY_ERR_STAT_DATA0 Register (Offset = 8CCh) [reset = 0h]
8D0h	DSS_DSP_SDMA_BUS_SAFETY_ERR_STAT_CMD		DSS_DSP_SDMA_BUS_SAFETY_ERR_STAT_CMD Register (Offset = 8D0h) [reset = 0h]
8D4h	DSS_DSP_SDMA_BUS_SAFETY_ERR_STAT_WRITE		DSS_DSP_SDMA_BUS_SAFETY_ERR_STAT_WRITE Register (Offset = 8D4h) [reset = 0h]
8D8h	DSS_DSP_SDMA_BUS_SAFETY_ERR_STAT_READ		DSS_DSP_SDMA_BUS_SAFETY_ERR_STAT_READ Register (Offset = 8D8h) [reset = 0h]
8DCh	DSS_DSP_SDMA_BUS_SAFETY_ERR_STAT_WRITERESP		DSS_DSP_SDMA_BUS_SAFETY_ERR_STAT_WRITERESP Register (Offset = 8DCh) [reset = 0h]
8E0h	DSS_TPTC_A0_RD_BUS_SAFETY_CTRL		DSS_TPTC_A0_RD_BUS_SAFETY_CTRL Register (Offset = 8E0h) [reset = X]
8E4h	DSS_TPTC_A0_RD_BUS_SAFETY_FI		DSS_TPTC_A0_RD_BUS_SAFETY_FI Register (Offset = 8E4h) [reset = X]
8E8h	DSS_TPTC_A0_RD_BUS_SAFETY_ERR		DSS_TPTC_A0_RD_BUS_SAFETY_ERR Register (Offset = 8E8h) [reset = 0h]
8ECh	DSS_TPTC_A0_RD_BUS_SAFETY_ERR_STAT_DATA0		DSS_TPTC_A0_RD_BUS_SAFETY_ERR_STAT_DATA0 Register (Offset = 8ECh) [reset = 0h]
8F0h	DSS_TPTC_A0_RD_BUS_SAFETY_ERR_STAT_CMD		DSS_TPTC_A0_RD_BUS_SAFETY_ERR_STAT_CMD Register (Offset = 8F0h) [reset = 0h]
8F4h	DSS_TPTC_A0_RD_BUS_SAFETY_ERR_STAT_READ		DSS_TPTC_A0_RD_BUS_SAFETY_ERR_STAT_READ Register (Offset = 8F4h) [reset = 0h]
8F8h	DSS_TPTC_A1_RD_BUS_SAFETY_CTRL		DSS_TPTC_A1_RD_BUS_SAFETY_CTRL Register (Offset = 8F8h) [reset = X]
8FCh	DSS_TPTC_A1_RD_BUS_SAFETY_FI		DSS_TPTC_A1_RD_BUS_SAFETY_FI Register (Offset = 8FCh) [reset = X]

Copyright © 2025 Texas Instruments Incorporated

Table 6-526. DSS_CTRL Registers (continued)

Offset	Acronym	Register Name	Section
900h	DSS_TPTC_A1_RD_BUS_SAFETY_ERR		DSS_TPTC_A1_RD_BUS_SAFETY_ERR Register (Offset = 900h) [reset = 0h]
904h	DSS_TPTC_A1_RD_BUS_SAFETY_ERR_STAT_DATA0		DSS_TPTC_A1_RD_BUS_SAFETY_ERR_STAT_DATA0 Register (Offset = 904h) [reset = 0h]
908h	DSS_TPTC_A1_RD_BUS_SAFETY_ERR_STAT_CMD		DSS_TPTC_A1_RD_BUS_SAFETY_ERR_STAT_CMD Register (Offset = 908h) [reset = 0h]
90Ch	DSS_TPTC_A1_RD_BUS_SAFETY_ERR_STAT_READ		DSS_TPTC_A1_RD_BUS_SAFETY_ERR_STAT_READ Register (Offset = 90Ch) [reset = 0h]
910h	DSS_TPTC_B0_RD_BUS_SAFETY_CTRL		DSS_TPTC_B0_RD_BUS_SAFETY_CTRL Register (Offset = 910h) [reset = X]
914h	DSS_TPTC_B0_RD_BUS_SAFETY_FI		DSS_TPTC_B0_RD_BUS_SAFETY_FI Register (Offset = 914h) [reset = X]
918h	DSS_TPTC_B0_RD_BUS_SAFETY_ERR		DSS_TPTC_B0_RD_BUS_SAFETY_ERR Register (Offset = 918h) [reset = 0h]
91Ch	DSS_TPTC_B0_RD_BUS_SAFETY_ERR_STAT_DATA0		DSS_TPTC_B0_RD_BUS_SAFETY_ERR_STAT_DATA0 Register (Offset = 91Ch) [reset = 0h]
920h	DSS_TPTC_B0_RD_BUS_SAFETY_ERR_STAT_CMD		DSS_TPTC_B0_RD_BUS_SAFETY_ERR_STAT_CMD Register (Offset = 920h) [reset = 0h]
924h	DSS_TPTC_B0_RD_BUS_SAFETY_ERR_STAT_READ		DSS_TPTC_B0_RD_BUS_SAFETY_ERR_STAT_READ Register (Offset = 924h) [reset = 0h]
928h	DSS_TPTC_B1_RD_BUS_SAFETY_CTRL		DSS_TPTC_B1_RD_BUS_SAFETY_CTRL Register (Offset = 928h) [reset = X]
92Ch	DSS_TPTC_B1_RD_BUS_SAFETY_FI		DSS_TPTC_B1_RD_BUS_SAFETY_FI Register (Offset = 92Ch) [reset = X]
930h	DSS_TPTC_B1_RD_BUS_SAFETY_ERR		DSS_TPTC_B1_RD_BUS_SAFETY_ERR Register (Offset = 930h) [reset = 0h]

Copyright © 2025 Texas Instruments Incorporated

Table 6-526. DSS_CTRL Registers (continued)

Offset	Acronym	Register Name	Section
934h	DSS_TPTC_B1_RD_BUS_SAFETY_ERR_STAT_DATA0		DSS_TPTC_B1_RD_BUS_SAFETY_ERR_STAT_DATA0 Register (Offset = 934h) [reset = 0h]
938h	DSS_TPTC_B1_RD_BUS_SAFETY_ERR_STAT_CMD		DSS_TPTC_B1_RD_BUS_SAFETY_ERR_STAT_CMD Register (Offset = 938h) [reset = 0h]
93Ch	DSS_TPTC_B1_RD_BUS_SAFETY_ERR_STAT_READ		DSS_TPTC_B1_RD_BUS_SAFETY_ERR_STAT_READ Register (Offset = 93Ch) [reset = 0h]
940h	DSS_TPTC_C0_RD_BUS_SAFETY_CTRL		DSS_TPTC_C0_RD_BUS_SAFETY_CTRL Register (Offset = 940h) [reset = X]
944h	DSS_TPTC_C0_RD_BUS_SAFETY_FI		DSS_TPTC_C0_RD_BUS_SAFETY_FI Register (Offset = 944h) [reset = X]
948h	DSS_TPTC_C0_RD_BUS_SAFETY_ERR		DSS_TPTC_C0_RD_BUS_SAFETY_ERR Register (Offset = 948h) [reset = 0h]
94Ch	DSS_TPTC_C0_RD_BUS_SAFETY_ERR_STAT_DATA0		DSS_TPTC_C0_RD_BUS_SAFETY_ERR_STAT_DATA0 Register (Offset = 94Ch) [reset = 0h]
950h	DSS_TPTC_C0_RD_BUS_SAFETY_ERR_STAT_CMD		DSS_TPTC_C0_RD_BUS_SAFETY_ERR_STAT_CMD Register (Offset = 950h) [reset = 0h]
954h	DSS_TPTC_C0_RD_BUS_SAFETY_ERR_STAT_READ		DSS_TPTC_C0_RD_BUS_SAFETY_ERR_STAT_READ Register (Offset = 954h) [reset = 0h]
958h	DSS_TPTC_C1_RD_BUS_SAFETY_CTRL		DSS_TPTC_C1_RD_BUS_SAFETY_CTRL Register (Offset = 958h) [reset = X]
95Ch	DSS_TPTC_C1_RD_BUS_SAFETY_FI		DSS_TPTC_C1_RD_BUS_SAFETY_FI Register (Offset = 95Ch) [reset = X]
960h	DSS_TPTC_C1_RD_BUS_SAFETY_ERR		DSS_TPTC_C1_RD_BUS_SAFETY_ERR Register (Offset = 960h) [reset = 0h]
964h	DSS_TPTC_C1_RD_BUS_SAFETY_ERR_STAT_DATA0		DSS_TPTC_C1_RD_BUS_SAFETY_ERR_STAT_DATA0 Register (Offset = 964h) [reset = 0h]

Copyright © 2025 Texas Instruments Incorporated

Table 6-526. DSS_CTRL Registers (continued)

Offset	Acronym	Register Name	Section
968h	DSS_TPTC_C1_RD_BUS_SAFETY_ERR_STAT_CMD		DSS_TPTC_C1_RD_BUS_SAFETY_ERR_STAT_CMD Register (Offset = 968h) [reset = 0h]
96Ch	DSS_TPTC_C1_RD_BUS_SAFETY_ERR_STAT_READ		DSS_TPTC_C1_RD_BUS_SAFETY_ERR_STAT_READ Register (Offset = 96Ch) [reset = 0h]
970h	DSS_TPTC_C2_RD_BUS_SAFETY_CTRL		DSS_TPTC_C2_RD_BUS_SAFETY_CTRL Register (Offset = 970h) [reset = X]
974h	DSS_TPTC_C2_RD_BUS_SAFETY_FI		DSS_TPTC_C2_RD_BUS_SAFETY_FI Register (Offset = 974h) [reset = X]
978h	DSS_TPTC_C2_RD_BUS_SAFETY_ERR		DSS_TPTC_C2_RD_BUS_SAFETY_ERR Register (Offset = 978h) [reset = 0h]
97Ch	DSS_TPTC_C2_RD_BUS_SAFETY_ERR_STAT_DATA0		DSS_TPTC_C2_RD_BUS_SAFETY_ERR_STAT_DATA0 Register (Offset = 97Ch) [reset = 0h]
980h	DSS_TPTC_C2_RD_BUS_SAFETY_ERR_STAT_CMD		DSS_TPTC_C2_RD_BUS_SAFETY_ERR_STAT_CMD Register (Offset = 980h) [reset = 0h]
984h	DSS_TPTC_C2_RD_BUS_SAFETY_ERR_STAT_READ		DSS_TPTC_C2_RD_BUS_SAFETY_ERR_STAT_READ Register (Offset = 984h) [reset = 0h]
988h	DSS_TPTC_C3_RD_BUS_SAFETY_CTRL		DSS_TPTC_C3_RD_BUS_SAFETY_CTRL Register (Offset = 988h) [reset = X]
98Ch	DSS_TPTC_C3_RD_BUS_SAFETY_FI		DSS_TPTC_C3_RD_BUS_SAFETY_FI Register (Offset = 98Ch) [reset = X]
990h	DSS_TPTC_C3_RD_BUS_SAFETY_ERR		DSS_TPTC_C3_RD_BUS_SAFETY_ERR Register (Offset = 990h) [reset = 0h]
994h	DSS_TPTC_C3_RD_BUS_SAFETY_ERR_STAT_DATA0		DSS_TPTC_C3_RD_BUS_SAFETY_ERR_STAT_DATA0 Register (Offset = 994h) [reset = 0h]
998h	DSS_TPTC_C3_RD_BUS_SAFETY_ERR_STAT_CMD		DSS_TPTC_C3_RD_BUS_SAFETY_ERR_STAT_CMD Register (Offset = 998h) [reset = 0h]

Copyright © 2025 Texas Instruments Incorporated

Table 6-526. DSS_CTRL Registers (continued)

Offset	Acronym	Register Name	Section
99Ch	DSS_TPTC_C3_RD_BUS_SAFETY_ERR_STAT_READ		DSS_TPTC_C3_RD_BUS_SAFETY_ERR_STAT_READ Register (Offset = 99Ch) [reset = 0h]
9A0h	DSS_TPTC_C4_RD_BUS_SAFETY_CTRL		DSS_TPTC_C4_RD_BUS_SAFETY_CTRL Register (Offset = 9A0h) [reset = X]
9A4h	DSS_TPTC_C4_RD_BUS_SAFETY_FI		DSS_TPTC_C4_RD_BUS_SAFETY_FI Register (Offset = 9A4h) [reset = X]
9A8h	DSS_TPTC_C4_RD_BUS_SAFETY_ERR		DSS_TPTC_C4_RD_BUS_SAFETY_ERR Register (Offset = 9A8h) [reset = 0h]
9ACh	DSS_TPTC_C4_RD_BUS_SAFETY_ERR_STAT_DATA0		DSS_TPTC_C4_RD_BUS_SAFETY_ERR_STAT_DATA0 Register (Offset = 9ACh) [reset = 0h]
9B0h	DSS_TPTC_C4_RD_BUS_SAFETY_ERR_STAT_CMD		DSS_TPTC_C4_RD_BUS_SAFETY_ERR_STAT_CMD Register (Offset = 9B0h) [reset = 0h]
9B4h	DSS_TPTC_C4_RD_BUS_SAFETY_ERR_STAT_READ		DSS_TPTC_C4_RD_BUS_SAFETY_ERR_STAT_READ Register (Offset = 9B4h) [reset = 0h]
9B8h	DSS_TPTC_C5_RD_BUS_SAFETY_CTRL		DSS_TPTC_C5_RD_BUS_SAFETY_CTRL Register (Offset = 9B8h) [reset = X]
9BCh	DSS_TPTC_C5_RD_BUS_SAFETY_FI		DSS_TPTC_C5_RD_BUS_SAFETY_FI Register (Offset = 9BCh) [reset = X]
9C0h	DSS_TPTC_C5_RD_BUS_SAFETY_ERR		DSS_TPTC_C5_RD_BUS_SAFETY_ERR Register (Offset = 9C0h) [reset = 0h]
9C4h	DSS_TPTC_C5_RD_BUS_SAFETY_ERR_STAT_DATA0		DSS_TPTC_C5_RD_BUS_SAFETY_ERR_STAT_DATA0 Register (Offset = 9C4h) [reset = 0h]
9C8h	DSS_TPTC_C5_RD_BUS_SAFETY_ERR_STAT_CMD		DSS_TPTC_C5_RD_BUS_SAFETY_ERR_STAT_CMD Register (Offset = 9C8h) [reset = 0h]
9CCh	DSS_TPTC_C5_RD_BUS_SAFETY_ERR_STAT_READ		DSS_TPTC_C5_RD_BUS_SAFETY_ERR_STAT_READ Register (Offset = 9CCh) [reset = 0h]

Copyright © 2025 Texas Instruments Incorporated

Table 6-526. DSS_CTRL Registers (continued)

Offset	Acronym	Register Name	Section
9D0h	DSS_TPTC_A0_WR_BUS_SAFETY_CTRL		DSS_TPTC_A0_WR_BUS_SAFETY_CTRL Register (Offset = 9D0h) [reset = X]
9D4h	DSS_TPTC_A0_WR_BUS_SAFETY_FI		DSS_TPTC_A0_WR_BUS_SAFETY_FI Register (Offset = 9D4h) [reset = X]
9D8h	DSS_TPTC_A0_WR_BUS_SAFETY_ERR		DSS_TPTC_A0_WR_BUS_SAFETY_ERR Register (Offset = 9D8h) [reset = 0h]
9DCh	DSS_TPTC_A0_WR_BUS_SAFETY_ERR_STAT_DATA0		DSS_TPTC_A0_WR_BUS_SAFETY_ERR_STAT_DATA0 Register (Offset = 9DCh) [reset = 0h]
9E0h	DSS_TPTC_A0_WR_BUS_SAFETY_ERR_STAT_CMD		DSS_TPTC_A0_WR_BUS_SAFETY_ERR_STAT_CMD Register (Offset = 9E0h) [reset = 0h]
9E4h	DSS_TPTC_A0_WR_BUS_SAFETY_ERR_STAT_WRITE		DSS_TPTC_A0_WR_BUS_SAFETY_ERR_STAT_WRITE Register (Offset = 9E4h) [reset = 0h]
9E8h	DSS_TPTC_A0_WR_BUS_SAFETY_ERR_STAT_WRITERESP		DSS_TPTC_A0_WR_BUS_SAFETY_ERR_STAT_WRITERESP Register (Offset = 9E8h) [reset = 0h]
9ECh	DSS_TPTC_A1_WR_BUS_SAFETY_CTRL		DSS_TPTC_A1_WR_BUS_SAFETY_CTRL Register (Offset = 9ECh) [reset = X]
9F0h	DSS_TPTC_A1_WR_BUS_SAFETY_FI		DSS_TPTC_A1_WR_BUS_SAFETY_FI Register (Offset = 9F0h) [reset = X]
9F4h	DSS_TPTC_A1_WR_BUS_SAFETY_ERR		DSS_TPTC_A1_WR_BUS_SAFETY_ERR Register (Offset = 9F4h) [reset = 0h]
9F8h	DSS_TPTC_A1_WR_BUS_SAFETY_ERR_STAT_DATA0		DSS_TPTC_A1_WR_BUS_SAFETY_ERR_STAT_DATA0 Register (Offset = 9F8h) [reset = 0h]
9FCh	DSS_TPTC_A1_WR_BUS_SAFETY_ERR_STAT_CMD		DSS_TPTC_A1_WR_BUS_SAFETY_ERR_STAT_CMD Register (Offset = 9FCh) [reset = 0h]
A00h	DSS_TPTC_A1_WR_BUS_SAFETY_ERR_STAT_WRITE		DSS_TPTC_A1_WR_BUS_SAFETY_ERR_STAT_WRITE Register (Offset = A00h) [reset = 0h]

Copyright © 2025 Texas Instruments Incorporated

Table 6-526. DSS_CTRL Registers (continued)

Offset	Acronym	Register Name	Section
A04h	DSS_TPTC_A1_WR_BUS_SAFETY_ERR_STAT_WRITERESP		DSS_TPTC_A1_WR_BUS_SAFETY_ERR_STAT_WRITERESP Register (Offset = A04h) [reset = 0h]
A08h	DSS_TPTC_B0_WR_BUS_SAFETY_CTRL		DSS_TPTC_B0_WR_BUS_SAFETY_CTRL Register (Offset = A08h) [reset = X]
A0Ch	DSS_TPTC_B0_WR_BUS_SAFETY_FI		DSS_TPTC_B0_WR_BUS_SAFETY_FI Register (Offset = A0Ch) [reset = X]
A10h	DSS_TPTC_B0_WR_BUS_SAFETY_ERR		DSS_TPTC_B0_WR_BUS_SAFETY_ERR Register (Offset = A10h) [reset = 0h]
A14h	DSS_TPTC_B0_WR_BUS_SAFETY_ERR_STAT_DATA0		DSS_TPTC_B0_WR_BUS_SAFETY_ERR_STAT_DATA0 Register (Offset = A14h) [reset = 0h]
A18h	DSS_TPTC_B0_WR_BUS_SAFETY_ERR_STAT_CMD		DSS_TPTC_B0_WR_BUS_SAFETY_ERR_STAT_CMD Register (Offset = A18h) [reset = 0h]
A1Ch	DSS_TPTC_B0_WR_BUS_SAFETY_ERR_STAT_WRITE		DSS_TPTC_B0_WR_BUS_SAFETY_ERR_STAT_WRITE Register (Offset = A1Ch) [reset = 0h]
A20h	DSS_TPTC_B0_WR_BUS_SAFETY_ERR_STAT_WRITERESP		DSS_TPTC_B0_WR_BUS_SAFETY_ERR_STAT_WRITERESP Register (Offset = A20h) [reset = 0h]
A24h	DSS_TPTC_B1_WR_BUS_SAFETY_CTRL		DSS_TPTC_B1_WR_BUS_SAFETY_CTRL Register (Offset = A24h) [reset = X]
A28h	DSS_TPTC_B1_WR_BUS_SAFETY_FI		DSS_TPTC_B1_WR_BUS_SAFETY_FI Register (Offset = A28h) [reset = X]
A2Ch	DSS_TPTC_B1_WR_BUS_SAFETY_ERR		DSS_TPTC_B1_WR_BUS_SAFETY_ERR Register (Offset = A2Ch) [reset = 0h]
A30h	DSS_TPTC_B1_WR_BUS_SAFETY_ERR_STAT_DATA0		DSS_TPTC_B1_WR_BUS_SAFETY_ERR_STAT_DATA0 Register (Offset = A30h) [reset = 0h]
A34h	DSS_TPTC_B1_WR_BUS_SAFETY_ERR_STAT_CMD		DSS_TPTC_B1_WR_BUS_SAFETY_ERR_STAT_CMD Register (Offset = A34h) [reset = 0h]

Copyright © 2025 Texas Instruments Incorporated

Table 6-526. DSS_CTRL Registers (continued)

Offset	Acronym	Register Name	Section
A38h	DSS_TPTC_B1_WR_BUS_SAFETY_ERR_STAT_WRITE		DSS_TPTC_B1_WR_BUS_SAFETY_ERR_STAT_WRITE Register (Offset = A38h) [reset = 0h]
A3Ch	DSS_TPTC_B1_WR_BUS_SAFETY_ERR_STAT_WRITERESP		DSS_TPTC_B1_WR_BUS_SAFETY_ERR_STAT_WRITERESP Register (Offset = A3Ch) [reset = 0h]
A40h	DSS_TPTC_C0_WR_BUS_SAFETY_CTRL		DSS_TPTC_C0_WR_BUS_SAFETY_CTRL Register (Offset = A40h) [reset = X]
A44h	DSS_TPTC_C0_WR_BUS_SAFETY_FI		DSS_TPTC_C0_WR_BUS_SAFETY_FI Register (Offset = A44h) [reset = X]
A48h	DSS_TPTC_C0_WR_BUS_SAFETY_ERR		DSS_TPTC_C0_WR_BUS_SAFETY_ERR Register (Offset = A48h) [reset = 0h]
A4Ch	DSS_TPTC_C0_WR_BUS_SAFETY_ERR_STAT_DATA0		DSS_TPTC_C0_WR_BUS_SAFETY_ERR_STAT_DATA0 Register (Offset = A4Ch) [reset = 0h]
A50h	DSS_TPTC_C0_WR_BUS_SAFETY_ERR_STAT_CMD		DSS_TPTC_C0_WR_BUS_SAFETY_ERR_STAT_CMD Register (Offset = A50h) [reset = 0h]
A54h	DSS_TPTC_C0_WR_BUS_SAFETY_ERR_STAT_WRITE		DSS_TPTC_C0_WR_BUS_SAFETY_ERR_STAT_WRITE Register (Offset = A54h) [reset = 0h]
A58h	DSS_TPTC_C0_WR_BUS_SAFETY_ERR_STAT_WRITERESP		DSS_TPTC_C0_WR_BUS_SAFETY_ERR_STAT_WRITERESP Register (Offset = A58h) [reset = 0h]
A5Ch	DSS_TPTC_C1_WR_BUS_SAFETY_CTRL		DSS_TPTC_C1_WR_BUS_SAFETY_CTRL Register (Offset = A5Ch) [reset = X]
A60h	DSS_TPTC_C1_WR_BUS_SAFETY_FI		DSS_TPTC_C1_WR_BUS_SAFETY_FI Register (Offset = A60h) [reset = X]
A64h	DSS_TPTC_C1_WR_BUS_SAFETY_ERR		DSS_TPTC_C1_WR_BUS_SAFETY_ERR Register (Offset = A64h) [reset = 0h]
A68h	DSS_TPTC_C1_WR_BUS_SAFETY_ERR_STAT_DATA0		DSS_TPTC_C1_WR_BUS_SAFETY_ERR_STAT_DATA0 Register (Offset = A68h) [reset = 0h]

Copyright © 2025 Texas Instruments Incorporated

Table 6-526. DSS_CTRL Registers (continued)

Offset	Acronym	Register Name	Section
A6Ch	DSS_TPTC_C1_WR_BUS_SAFETY_ERR_STAT_CMD		DSS_TPTC_C1_WR_BUS_SAFETY_ERR_STAT_CMD Register (Offset = A6Ch) [reset = 0h]
A70h	DSS_TPTC_C1_WR_BUS_SAFETY_ERR_STAT_WRITE		DSS_TPTC_C1_WR_BUS_SAFETY_ERR_STAT_WRITE Register (Offset = A70h) [reset = 0h]
A74h	DSS_TPTC_C1_WR_BUS_SAFETY_ERR_STAT_WRITERESP		DSS_TPTC_C1_WR_BUS_SAFETY_ERR_STAT_WRITERESP Register (Offset = A74h) [reset = 0h]
A78h	DSS_TPTC_C2_WR_BUS_SAFETY_CTRL		DSS_TPTC_C2_WR_BUS_SAFETY_CTRL Register (Offset = A78h) [reset = X]
A7Ch	DSS_TPTC_C2_WR_BUS_SAFETY_FI		DSS_TPTC_C2_WR_BUS_SAFETY_FI Register (Offset = A7Ch) [reset = X]
A80h	DSS_TPTC_C2_WR_BUS_SAFETY_ERR		DSS_TPTC_C2_WR_BUS_SAFETY_ERR Register (Offset = A80h) [reset = 0h]
A84h	DSS_TPTC_C2_WR_BUS_SAFETY_ERR_STAT_DATA0		DSS_TPTC_C2_WR_BUS_SAFETY_ERR_STAT_DATA0 Register (Offset = A84h) [reset = 0h]
A88h	DSS_TPTC_C2_WR_BUS_SAFETY_ERR_STAT_CMD		DSS_TPTC_C2_WR_BUS_SAFETY_ERR_STAT_CMD Register (Offset = A88h) [reset = 0h]
A8Ch	DSS_TPTC_C2_WR_BUS_SAFETY_ERR_STAT_WRITE		DSS_TPTC_C2_WR_BUS_SAFETY_ERR_STAT_WRITE Register (Offset = A8Ch) [reset = 0h]
A90h	DSS_TPTC_C2_WR_BUS_SAFETY_ERR_STAT_WRITERESP		DSS_TPTC_C2_WR_BUS_SAFETY_ERR_STAT_WRITERESP Register (Offset = A90h) [reset = 0h]
A94h	DSS_TPTC_C3_WR_BUS_SAFETY_CTRL		DSS_TPTC_C3_WR_BUS_SAFETY_CTRL Register (Offset = A94h) [reset = X]
A98h	DSS_TPTC_C3_WR_BUS_SAFETY_FI		DSS_TPTC_C3_WR_BUS_SAFETY_FI Register (Offset = A98h) [reset = X]
A9Ch	DSS_TPTC_C3_WR_BUS_SAFETY_ERR		DSS_TPTC_C3_WR_BUS_SAFETY_ERR Register (Offset = A9Ch) [reset = 0h]

Copyright © 2025 Texas Instruments Incorporated

Table 6-526. DSS_CTRL Registers (continued)

Offset	Acronym	Register Name	Section
AA0h	DSS_TPTC_C3_WR_BUS_SAFETY_ERR_STAT_DATA0		DSS_TPTC_C3_WR_BUS_SAFETY_ERR_STAT_DATA0 Register (Offset = AA0h) [reset = 0h]
AA4h	DSS_TPTC_C3_WR_BUS_SAFETY_ERR_STAT_CMD		DSS_TPTC_C3_WR_BUS_SAFETY_ERR_STAT_CMD Register (Offset = AA4h) [reset = 0h]
AA8h	DSS_TPTC_C3_WR_BUS_SAFETY_ERR_STAT_WRITE		DSS_TPTC_C3_WR_BUS_SAFETY_ERR_STAT_WRITE Register (Offset = AA8h) [reset = 0h]
AACh	DSS_TPTC_C3_WR_BUS_SAFETY_ERR_STAT_WRITERESP		DSS_TPTC_C3_WR_BUS_SAFETY_ERR_STAT_WRITERESP Register (Offset = AACh) [reset = 0h]
AB0h	DSS_TPTC_C4_WR_BUS_SAFETY_CTRL		DSS_TPTC_C4_WR_BUS_SAFETY_CTRL Register (Offset = AB0h) [reset = X]
AB4h	DSS_TPTC_C4_WR_BUS_SAFETY_FI		DSS_TPTC_C4_WR_BUS_SAFETY_FI Register (Offset = AB4h) [reset = X]
AB8h	DSS_TPTC_C4_WR_BUS_SAFETY_ERR		DSS_TPTC_C4_WR_BUS_SAFETY_ERR Register (Offset = AB8h) [reset = 0h]
ABCh	DSS_TPTC_C4_WR_BUS_SAFETY_ERR_STAT_DATA0		DSS_TPTC_C4_WR_BUS_SAFETY_ERR_STAT_DATA0 Register (Offset = ABCh) [reset = 0h]
AC0h	DSS_TPTC_C4_WR_BUS_SAFETY_ERR_STAT_CMD		DSS_TPTC_C4_WR_BUS_SAFETY_ERR_STAT_CMD Register (Offset = AC0h) [reset = 0h]
AC4h	DSS_TPTC_C4_WR_BUS_SAFETY_ERR_STAT_WRITE		DSS_TPTC_C4_WR_BUS_SAFETY_ERR_STAT_WRITE Register (Offset = AC4h) [reset = 0h]
AC8h	DSS_TPTC_C4_WR_BUS_SAFETY_ERR_STAT_WRITERESP		DSS_TPTC_C4_WR_BUS_SAFETY_ERR_STAT_WRITERESP Register (Offset = AC8h) [reset = 0h]
ACCh	DSS_TPTC_C5_WR_BUS_SAFETY_CTRL		DSS_TPTC_C5_WR_BUS_SAFETY_CTRL Register (Offset = ACCh) [reset = X]
AD0h	DSS_TPTC_C5_WR_BUS_SAFETY_FI		DSS_TPTC_C5_WR_BUS_SAFETY_FI Register (Offset = AD0h) [reset = X]

Copyright © 2025 Texas Instruments Incorporated

Table 6-526. DSS_CTRL Registers (continued)

Offset	Acronym	Register Name	Section
AD4h	DSS_TPTC_C5_WR_BUS_SAFETY_ERR		DSS_TPTC_C5_WR_BUS_SAFETY_ERR Register (Offset = AD4h) [reset = 0h]
AD8h	DSS_TPTC_C5_WR_BUS_SAFETY_ERR_STAT_DATA0		DSS_TPTC_C5_WR_BUS_SAFETY_ERR_STAT_DATA0 Register (Offset = AD8h) [reset = 0h]
ADCh	DSS_TPTC_C5_WR_BUS_SAFETY_ERR_STAT_CMD		DSS_TPTC_C5_WR_BUS_SAFETY_ERR_STAT_CMD Register (Offset = ADCh) [reset = 0h]
AE0h	DSS_TPTC_C5_WR_BUS_SAFETY_ERR_STAT_WRITE		DSS_TPTC_C5_WR_BUS_SAFETY_ERR_STAT_WRITE Register (Offset = AE0h) [reset = 0h]
AE4h	DSS_TPTC_C5_WR_BUS_SAFETY_ERR_STAT_WRITERESP		DSS_TPTC_C5_WR_BUS_SAFETY_ERR_STAT_WRITERESP Register (Offset = AE4h) [reset = 0h]
AE8h	DSS_MDO_FIFO_BUS_SAFETY_CTRL		DSS_MDO_FIFO_BUS_SAFETY_CTRL Register (Offset = AE8h) [reset = X]
AECh	DSS_MDO_FIFO_BUS_SAFETY_FI		DSS_MDO_FIFO_BUS_SAFETY_FI Register (Offset = AECh) [reset = X]
AF0h	DSS_MDO_FIFO_BUS_SAFETY_ERR		DSS_MDO_FIFO_BUS_SAFETY_ERR Register (Offset = AF0h) [reset = 0h]
AF4h	DSS_MDO_FIFO_BUS_SAFETY_ERR_STAT_DATA0		DSS_MDO_FIFO_BUS_SAFETY_ERR_STAT_DATA0 Register (Offset = AF4h) [reset = 0h]
AF8h	DSS_MDO_FIFO_BUS_SAFETY_ERR_STAT_CMD		DSS_MDO_FIFO_BUS_SAFETY_ERR_STAT_CMD Register (Offset = AF8h) [reset = 0h]
AFCh	DSS_MDO_FIFO_BUS_SAFETY_ERR_STAT_WRITE		DSS_MDO_FIFO_BUS_SAFETY_ERR_STAT_WRITE Register (Offset = AFCh) [reset = 0h]
B00h	DSS_MDO_FIFO_BUS_SAFETY_ERR_STAT_READ		DSS_MDO_FIFO_BUS_SAFETY_ERR_STAT_READ Register (Offset = B00h) [reset = 0h]

Copyright © 2025 Texas Instruments Incorporated

Table 6-526. DSS_CTRL Registers (continued)

Offset	Acronym	Register Name	Section
B04h	DSS_MDO_FIFO_BUS_SAFETY_ERR_STAT_WRITERESP		DSS_MDO_FIFO_BUS_SAFETY_ERR_STAT_WRITERESP Register (Offset = B04h) [reset = 0h]
B08h	DSS_CBUFF_FIFO_BUS_SAFETY_CTRL		DSS_CBUFF_FIFO_BUS_SAFETY_CTRL Register (Offset = B08h) [reset = X]
B0Ch	DSS_CBUFF_FIFO_BUS_SAFETY_FI		DSS_CBUFF_FIFO_BUS_SAFETY_FI Register (Offset = B0Ch) [reset = X]
B10h	DSS_CBUFF_FIFO_BUS_SAFETY_ERR		DSS_CBUFF_FIFO_BUS_SAFETY_ERR Register (Offset = B10h) [reset = 0h]
B14h	DSS_CBUFF_FIFO_BUS_SAFETY_ERR_STAT_DATA0		DSS_CBUFF_FIFO_BUS_SAFETY_ERR_STAT_DATA0 Register (Offset = B14h) [reset = 0h]
B18h	DSS_CBUFF_FIFO_BUS_SAFETY_ERR_STAT_CMD		DSS_CBUFF_FIFO_BUS_SAFETY_ERR_STAT_CMD Register (Offset = B18h) [reset = 0h]
B1Ch	DSS_CBUFF_FIFO_BUS_SAFETY_ERR_STAT_WRITE		DSS_CBUFF_FIFO_BUS_SAFETY_ERR_STAT_WRITE Register (Offset = B1Ch) [reset = 0h]
B20h	DSS_CBUFF_FIFO_BUS_SAFETY_ERR_STAT_READ		DSS_CBUFF_FIFO_BUS_SAFETY_ERR_STAT_READ Register (Offset = B20h) [reset = 0h]
B24h	DSS_CBUFF_FIFO_BUS_SAFETY_ERR_STAT_WRITERESP		DSS_CBUFF_FIFO_BUS_SAFETY_ERR_STAT_WRITERESP Register (Offset = B24h) [reset = 0h]
B28h	DSS_CMC_UCOMP0_BUS_SAFETY_CTRL		DSS_CMC_UCOMP0_BUS_SAFETY_CTRL Register (Offset = B28h) [reset = X]
B2Ch	DSS_CMC_UCOMP0_BUS_SAFETY_FI		DSS_CMC_UCOMP0_BUS_SAFETY_FI Register (Offset = B2Ch) [reset = X]
B30h	DSS_CMC_UCOMP0_BUS_SAFETY_ERR		DSS_CMC_UCOMP0_BUS_SAFETY_ERR Register (Offset = B30h) [reset = 0h]
B34h	DSS_CMC_UCOMP0_BUS_SAFETY_ERR_STAT_DATA0		DSS_CMC_UCOMP0_BUS_SAFETY_ERR_STAT_DATA0 Register (Offset = B34h) [reset = 0h]

Copyright © 2025 Texas Instruments Incorporated

Table 6-526. DSS_CTRL Registers (continued)

Offset	Acronym	Register Name	Section
B38h	DSS_CMC_UCOMP0_BUS_SAFETY_ERR_STAT_CMD		DSS_CMC_UCOMP0_BUS_SAFETY_ERR_STAT_CMD Register (Offset = B38h) [reset = 0h]
B3Ch	DSS_CMC_UCOMP0_BUS_SAFETY_ERR_STAT_WRITE		DSS_CMC_UCOMP0_BUS_SAFETY_ERR_STAT_WRITE Register (Offset = B3Ch) [reset = 0h]
B40h	DSS_CMC_UCOMP0_BUS_SAFETY_ERR_STAT_READ		DSS_CMC_UCOMP0_BUS_SAFETY_ERR_STAT_READ Register (Offset = B40h) [reset = 0h]
B44h	DSS_CMC_UCOMP0_BUS_SAFETY_ERR_STAT_WRITERESP		DSS_CMC_UCOMP0_BUS_SAFETY_ERR_STAT_WRITERESP Register (Offset = B44h) [reset = 0h]
B48h	DSS_CMC_UCOMP1_BUS_SAFETY_CTRL		DSS_CMC_UCOMP1_BUS_SAFETY_CTRL Register (Offset = B48h) [reset = X]
B4Ch	DSS_CMC_UCOMP1_BUS_SAFETY_FI		DSS_CMC_UCOMP1_BUS_SAFETY_FI Register (Offset = B4Ch) [reset = X]
B50h	DSS_CMC_UCOMP1_BUS_SAFETY_ERR		DSS_CMC_UCOMP1_BUS_SAFETY_ERR Register (Offset = B50h) [reset = 0h]
B54h	DSS_CMC_UCOMP1_BUS_SAFETY_ERR_STAT_DATA0		DSS_CMC_UCOMP1_BUS_SAFETY_ERR_STAT_DATA0 Register (Offset = B54h) [reset = 0h]
B58h	DSS_CMC_UCOMP1_BUS_SAFETY_ERR_STAT_CMD		DSS_CMC_UCOMP1_BUS_SAFETY_ERR_STAT_CMD Register (Offset = B58h) [reset = 0h]
B5Ch	DSS_CMC_UCOMP1_BUS_SAFETY_ERR_STAT_WRITE		DSS_CMC_UCOMP1_BUS_SAFETY_ERR_STAT_WRITE Register (Offset = B5Ch) [reset = 0h]
B60h	DSS_CMC_UCOMP1_BUS_SAFETY_ERR_STAT_READ		DSS_CMC_UCOMP1_BUS_SAFETY_ERR_STAT_READ Register (Offset = B60h) [reset = 0h]
B64h	DSS_CMC_UCOMP1_BUS_SAFETY_ERR_STAT_WRITERESP		DSS_CMC_UCOMP1_BUS_SAFETY_ERR_STAT_WRITERESP Register (Offset = B64h) [reset = 0h]

Copyright © 2025 Texas Instruments Incorporated

Table 6-526. DSS_CTRL Registers (continued)

Offset	Acronym	Register Name	Section
B68h	DSS_CMC_UCOMP2_BUS_SAFETY_CTRL		DSS_CMC_UCOMP2_BUS_SAFETY_CTRL Register (Offset = B68h) [reset = X]
B6Ch	DSS_CMC_UCOMP2_BUS_SAFETY_FI		DSS_CMC_UCOMP2_BUS_SAFETY_FI Register (Offset = B6Ch) [reset = X]
B70h	DSS_CMC_UCOMP2_BUS_SAFETY_ERR		DSS_CMC_UCOMP2_BUS_SAFETY_ERR Register (Offset = B70h) [reset = 0h]
B74h	DSS_CMC_UCOMP2_BUS_SAFETY_ERR_STAT_DATA0		DSS_CMC_UCOMP2_BUS_SAFETY_ERR_STAT_DATA0 Register (Offset = B74h) [reset = 0h]
B78h	DSS_CMC_UCOMP2_BUS_SAFETY_ERR_STAT_CMD		DSS_CMC_UCOMP2_BUS_SAFETY_ERR_STAT_CMD Register (Offset = B78h) [reset = 0h]
B7Ch	DSS_CMC_UCOMP2_BUS_SAFETY_ERR_STAT_WRITE		DSS_CMC_UCOMP2_BUS_SAFETY_ERR_STAT_WRITE Register (Offset = B7Ch) [reset = 0h]
B80h	DSS_CMC_UCOMP2_BUS_SAFETY_ERR_STAT_READ		DSS_CMC_UCOMP2_BUS_SAFETY_ERR_STAT_READ Register (Offset = B80h) [reset = 0h]
B84h	DSS_CMC_UCOMP2_BUS_SAFETY_ERR_STAT_WRITERESP		DSS_CMC_UCOMP2_BUS_SAFETY_ERR_STAT_WRITERESP Register (Offset = B84h) [reset = 0h]
B88h	DSS_CMC_UCOMP3_BUS_SAFETY_CTRL		DSS_CMC_UCOMP3_BUS_SAFETY_CTRL Register (Offset = B88h) [reset = X]
B8Ch	DSS_CMC_UCOMP3_BUS_SAFETY_FI		DSS_CMC_UCOMP3_BUS_SAFETY_FI Register (Offset = B8Ch) [reset = X]
B90h	DSS_CMC_UCOMP3_BUS_SAFETY_ERR		DSS_CMC_UCOMP3_BUS_SAFETY_ERR Register (Offset = B90h) [reset = 0h]
B94h	DSS_CMC_UCOMP3_BUS_SAFETY_ERR_STAT_DATA0		DSS_CMC_UCOMP3_BUS_SAFETY_ERR_STAT_DATA0 Register (Offset = B94h) [reset = 0h]
B98h	DSS_CMC_UCOMP3_BUS_SAFETY_ERR_STAT_CMD		DSS_CMC_UCOMP3_BUS_SAFETY_ERR_STAT_CMD Register (Offset = B98h) [reset = 0h]

Copyright © 2025 Texas Instruments Incorporated

Table 6-526. DSS_CTRL Registers (continued)

Offset	Acronym	Register Name	Section
B9Ch	DSS_CMC_UCOMP3_BUS_SAFETY_ERR_STAT_WRITE		DSS_CMC_UCOMP3_BUS_SAFETY_ERR_STAT_WRITE Register (Offset = B9Ch) [reset = 0h]
BA0h	DSS_CMC_UCOMP3_BUS_SAFETY_ERR_STAT_READ		DSS_CMC_UCOMP3_BUS_SAFETY_ERR_STAT_READ Register (Offset = BA0h) [reset = 0h]
BA4h	DSS_CMC_UCOMP3_BUS_SAFETY_ERR_STAT_WRITERESP		DSS_CMC_UCOMP3_BUS_SAFETY_ERR_STAT_WRITERESP Register (Offset = BA4h) [reset = 0h]
BA8h	DSS_CMC_COMP_BUS_SAFETY_CTRL		DSS_CMC_COMP_BUS_SAFETY_CTRL Register (Offset = BA8h) [reset = X]
BACh	DSS_CMC_COMP_BUS_SAFETY_FI		DSS_CMC_COMP_BUS_SAFETY_FI Register (Offset = BACh) [reset = X]
BB0h	DSS_CMC_COMP_BUS_SAFETY_ERR		DSS_CMC_COMP_BUS_SAFETY_ERR Register (Offset = BB0h) [reset = 0h]
BB4h	DSS_CMC_COMP_BUS_SAFETY_ERR_STAT_DATA0		DSS_CMC_COMP_BUS_SAFETY_ERR_STAT_DATA0 Register (Offset = BB4h) [reset = 0h]
BB8h	DSS_CMC_COMP_BUS_SAFETY_ERR_STAT_CMD		DSS_CMC_COMP_BUS_SAFETY_ERR_STAT_CMD Register (Offset = BB8h) [reset = 0h]
BBCh	DSS_CMC_COMP_BUS_SAFETY_ERR_STAT_WRITE		DSS_CMC_COMP_BUS_SAFETY_ERR_STAT_WRITE Register (Offset = BBCh) [reset = 0h]
BC0h	DSS_CMC_COMP_BUS_SAFETY_ERR_STAT_READ		DSS_CMC_COMP_BUS_SAFETY_ERR_STAT_READ Register (Offset = BC0h) [reset = 0h]
BC4h	DSS_CMC_COMP_BUS_SAFETY_ERR_STAT_WRITERESP		DSS_CMC_COMP_BUS_SAFETY_ERR_STAT_WRITERESP Register (Offset = BC4h) [reset = 0h]
BC8h	DSS_MCRC_BUS_SAFETY_CTRL		DSS_MCRC_BUS_SAFETY_CTRL Register (Offset = BC8h) [reset = X]
BCCh	DSS_MCRC_BUS_SAFETY_FI		DSS_MCRC_BUS_SAFETY_FI Register (Offset = BCCh) [reset = X]

Copyright © 2025 Texas Instruments Incorporated

Table 6-526. DSS_CTRL Registers (continued)

Offset	Acronym	Register Name	Section
BD0h	DSS_MCRC_BUS_SAFETY_ERR		DSS_MCRC_BUS_SAFETY_ERR Register (Offset = BD0h) [reset = 0h]
BD4h	DSS_MCRC_BUS_SAFETY_ERR_STAT_DATA0		DSS_MCRC_BUS_SAFETY_ERR_STAT_DATA0 Register (Offset = BD4h) [reset = 0h]
BD8h	DSS_MCRC_BUS_SAFETY_ERR_STAT_CMD		DSS_MCRC_BUS_SAFETY_ERR_STAT_CMD Register (Offset = BD8h) [reset = 0h]
BDCh	DSS_MCRC_BUS_SAFETY_ERR_STAT_WRITE		DSS_MCRC_BUS_SAFETY_ERR_STAT_WRITE Register (Offset = BDCh) [reset = 0h]
BE0h	DSS_MCRC_BUS_SAFETY_ERR_STAT_READ		DSS_MCRC_BUS_SAFETY_ERR_STAT_READ Register (Offset = BE0h) [reset = 0h]
BE4h	DSS_MCRC_BUS_SAFETY_ERR_STAT_WRITERESP		DSS_MCRC_BUS_SAFETY_ERR_STAT_WRITERESP Register (Offset = BE4h) [reset = 0h]
BE8h	DSS_PCR_BUS_SAFETY_CTRL		DSS_PCR_BUS_SAFETY_CTRL Register (Offset = BE8h) [reset = X]
BECh	DSS_PCR_BUS_SAFETY_FI		DSS_PCR_BUS_SAFETY_FI Register (Offset = BECh) [reset = X]
BF0h	DSS_PCR_BUS_SAFETY_ERR		DSS_PCR_BUS_SAFETY_ERR Register (Offset = BF0h) [reset = 0h]
BF4h	DSS_PCR_BUS_SAFETY_ERR_STAT_DATA0		DSS_PCR_BUS_SAFETY_ERR_STAT_DATA0 Register (Offset = BF4h) [reset = 0h]
BF8h	DSS_PCR_BUS_SAFETY_ERR_STAT_CMD		DSS_PCR_BUS_SAFETY_ERR_STAT_CMD Register (Offset = BF8h) [reset = 0h]
BFCh	DSS_PCR_BUS_SAFETY_ERR_STAT_WRITE		DSS_PCR_BUS_SAFETY_ERR_STAT_WRITE Register (Offset = BFCh) [reset = 0h]

Copyright © 2025 Texas Instruments Incorporated

Table 6-526. DSS_CTRL Registers (continued)

Offset	Acronym	Register Name	Section
C00h	DSS_PCR_BUS_SAFETY_ERR_STAT_READ		DSS_PCR_BUS_SAFETY_ERR_STAT_READ Register (Offset = C00h) [reset = 0h]
C04h	DSS_PCR_BUS_SAFETY_ERR_STAT_WRITERESP		DSS_PCR_BUS_SAFETY_ERR_STAT_WRITERESP Register (Offset = C04h) [reset = 0h]
C08h	DSS_HWA_DMA0_BUS_SAFETY_CTRL		DSS_HWA_DMA0_BUS_SAFETY_CTRL Register (Offset = C08h) [reset = X]
C0Ch	DSS_HWA_DMA0_BUS_SAFETY_FI		DSS_HWA_DMA0_BUS_SAFETY_FI Register (Offset = C0Ch) [reset = X]
C10h	DSS_HWA_DMA0_BUS_SAFETY_ERR		DSS_HWA_DMA0_BUS_SAFETY_ERR Register (Offset = C10h) [reset = 0h]
C14h	DSS_HWA_DMA0_BUS_SAFETY_ERR_STAT_DATA0		DSS_HWA_DMA0_BUS_SAFETY_ERR_STAT_DATA0 Register (Offset = C14h) [reset = 0h]
C18h	DSS_HWA_DMA0_BUS_SAFETY_ERR_STAT_CMD		DSS_HWA_DMA0_BUS_SAFETY_ERR_STAT_CMD Register (Offset = C18h) [reset = 0h]
C1Ch	DSS_HWA_DMA0_BUS_SAFETY_ERR_STAT_WRITE		DSS_HWA_DMA0_BUS_SAFETY_ERR_STAT_WRITE Register (Offset = C1Ch) [reset = 0h]
C20h	DSS_HWA_DMA0_BUS_SAFETY_ERR_STAT_READ		DSS_HWA_DMA0_BUS_SAFETY_ERR_STAT_READ Register (Offset = C20h) [reset = 0h]
C24h	DSS_HWA_DMA0_BUS_SAFETY_ERR_STAT_WRITERESP		DSS_HWA_DMA0_BUS_SAFETY_ERR_STAT_WRITERESP Register (Offset = C24h) [reset = 0h]
C28h	DSS_HWA_DMA1_BUS_SAFETY_CTRL		DSS_HWA_DMA1_BUS_SAFETY_CTRL Register (Offset = C28h) [reset = X]
C2Ch	DSS_HWA_DMA1_BUS_SAFETY_FI		DSS_HWA_DMA1_BUS_SAFETY_FI Register (Offset = C2Ch) [reset = X]
C30h	DSS_HWA_DMA1_BUS_SAFETY_ERR		DSS_HWA_DMA1_BUS_SAFETY_ERR Register (Offset = C30h) [reset = 0h]

Copyright © 2025 Texas Instruments Incorporated

Table 6-526. DSS_CTRL Registers (continued)

Offset	Acronym	Register Name	Section
C34h	DSS_HWA_DMA1_BUS_SAFETY_ERR_STAT_DATA0		DSS_HWA_DMA1_BUS_SAFETY_ERR_STAT_DATA0 Register (Offset = C34h) [reset = 0h]
C38h	DSS_HWA_DMA1_BUS_SAFETY_ERR_STAT_CMD		DSS_HWA_DMA1_BUS_SAFETY_ERR_STAT_CMD Register (Offset = C38h) [reset = 0h]
C3Ch	DSS_HWA_DMA1_BUS_SAFETY_ERR_STAT_WRITE		DSS_HWA_DMA1_BUS_SAFETY_ERR_STAT_WRITE Register (Offset = C3Ch) [reset = 0h]
C40h	DSS_HWA_DMA1_BUS_SAFETY_ERR_STAT_READ		DSS_HWA_DMA1_BUS_SAFETY_ERR_STAT_READ Register (Offset = C40h) [reset = 0h]
C44h	DSS_HWA_DMA1_BUS_SAFETY_ERR_STAT_WRITERESP		DSS_HWA_DMA1_BUS_SAFETY_ERR_STAT_WRITERESP Register (Offset = C44h) [reset = 7h]
C48h	DSS_CM4_M_BUS_SAFETY_CTRL		DSS_CM4_M_BUS_SAFETY_CTRL Register (Offset = C48h) [reset = X]
C4Ch	DSS_CM4_M_BUS_SAFETY_FI		DSS_CM4_M_BUS_SAFETY_FI Register (Offset = C4Ch) [reset = X]
C50h	DSS_CM4_M_BUS_SAFETY_ERR		DSS_CM4_M_BUS_SAFETY_ERR Register (Offset = C50h) [reset = 0h]
C54h	DSS_CM4_M_BUS_SAFETY_ERR_STAT_DATA0		DSS_CM4_M_BUS_SAFETY_ERR_STAT_DATA0 Register (Offset = C54h) [reset = 0h]
C58h	DSS_CM4_M_BUS_SAFETY_ERR_STAT_CMD		DSS_CM4_M_BUS_SAFETY_ERR_STAT_CMD Register (Offset = C58h) [reset = 0h]
C5Ch	DSS_CM4_M_BUS_SAFETY_ERR_STAT_WRITE		DSS_CM4_M_BUS_SAFETY_ERR_STAT_WRITE Register (Offset = C5Ch) [reset = 0h]
C60h	DSS_CM4_M_BUS_SAFETY_ERR_STAT_READ		DSS_CM4_M_BUS_SAFETY_ERR_STAT_READ Register (Offset = C60h) [reset = 0h]

Copyright © 2025 Texas Instruments Incorporated

Table 6-526. DSS_CTRL Registers (continued)

Offset	Acronym	Register Name	Section
C64h	DSS_CM4_M_BUS_SAFETY_ERR_STAT_WRITERESP		DSS_CM4_M_BUS_SAFETY_ERR_STAT_WRITERESP Register (Offset = C64h) [reset = 0h]
C68h	DSS_CM4_S_BUS_SAFETY_CTRL		DSS_CM4_S_BUS_SAFETY_CTRL Register (Offset = C68h) [reset = X]
C6Ch	DSS_CM4_S_BUS_SAFETY_FI		DSS_CM4_S_BUS_SAFETY_FI Register (Offset = C6Ch) [reset = X]
C70h	DSS_CM4_S_BUS_SAFETY_ERR		DSS_CM4_S_BUS_SAFETY_ERR Register (Offset = C70h) [reset = 0h]
C74h	DSS_CM4_S_BUS_SAFETY_ERR_STAT_DATA0		DSS_CM4_S_BUS_SAFETY_ERR_STAT_DATA0 Register (Offset = C74h) [reset = 0h]
C78h	DSS_CM4_S_BUS_SAFETY_ERR_STAT_CMD		DSS_CM4_S_BUS_SAFETY_ERR_STAT_CMD Register (Offset = C78h) [reset = 0h]
C7Ch	DSS_CM4_S_BUS_SAFETY_ERR_STAT_WRITE		DSS_CM4_S_BUS_SAFETY_ERR_STAT_WRITE Register (Offset = C7Ch) [reset = 0h]
C80h	DSS_CM4_S_BUS_SAFETY_ERR_STAT_READ		DSS_CM4_S_BUS_SAFETY_ERR_STAT_READ Register (Offset = C80h) [reset = 0h]
C84h	DSS_CM4_S_BUS_SAFETY_ERR_STAT_WRITERESP		DSS_CM4_S_BUS_SAFETY_ERR_STAT_WRITERESP Register (Offset = C84h) [reset = 0h]
C88h	DSS_MBOX_BUS_SAFETY_CTRL		DSS_MBOX_BUS_SAFETY_CTRL Register (Offset = C88h) [reset = X]
C8Ch	DSS_MBOX_BUS_SAFETY_FI		DSS_MBOX_BUS_SAFETY_FI Register (Offset = C8Ch) [reset = X]
C90h	DSS_MBOX_BUS_SAFETY_ERR		DSS_MBOX_BUS_SAFETY_ERR Register (Offset = C90h) [reset = 0h]
C94h	DSS_MBOX_BUS_SAFETY_ERR_STAT_DATA0		DSS_MBOX_BUS_SAFETY_ERR_STAT_DATA0 Register (Offset = C94h) [reset = 0h]

Copyright © 2025 Texas Instruments Incorporated

Table 6-526. DSS_CTRL Registers (continued)

Offset	Acronym	Register Name	Section
C98h	DSS_MBOX_BUS_SAFETY_ERR_STAT_CMD		DSS_MBOX_BUS_SAFETY_ERR_STAT_CMD Register (Offset = C98h) [reset = 0h]
C9Ch	DSS_MBOX_BUS_SAFETY_ERR_STAT_WRITE		DSS_MBOX_BUS_SAFETY_ERR_STAT_WRITE Register (Offset = C9Ch) [reset = 0h]
CA0h	DSS_MBOX_BUS_SAFETY_ERR_STAT_READ		DSS_MBOX_BUS_SAFETY_ERR_STAT_READ Register (Offset = CA0h) [reset = 0h]
CA4h	DSS_MBOX_BUS_SAFETY_ERR_STAT_WRITERESP		DSS_MBOX_BUS_SAFETY_ERR_STAT_WRITERESP Register (Offset = CA4h) [reset = 0h]
FD0h	HW_SPARE_RW0		HW_SPARE_RW0 Register (Offset = FD0h) [reset = 0h]
FD4h	HW_SPARE_RW1		HW_SPARE_RW1 Register (Offset = FD4h) [reset = 0h]
FD8h	HW_SPARE_RW2		HW_SPARE_RW2 Register (Offset = FD8h) [reset = 0h]
FDCh	HW_SPARE_RW3		HW_SPARE_RW3 Register (Offset = FDCh) [reset = 0h]
FE0h	HW_SPARE_RO0		HW_SPARE_RO0 Register (Offset = FE0h) [reset = 0h]
FE4h	HW_SPARE_RO1		HW_SPARE_RO1 Register (Offset = FE4h) [reset = 0h]
FE8h	HW_SPARE_RO2		HW_SPARE_RO2 Register (Offset = FE8h) [reset = 0h]
FECh	HW_SPARE_RO3		HW_SPARE_RO3 Register (Offset = FECh) [reset = 0h]
FF0h	HW_SPARE_WPH		HW_SPARE_WPH Register (Offset = FF0h) [reset = 0h]
FF4h	HW_SPARE_REC		HW_SPARE_REC Register (Offset = FF4h) [reset = 0h]
1008h	LOCK0_KICK0	- KICK0 component	LOCK0_KICK0 Register (Offset = 1008h) [reset = 0h]
100Ch	LOCK0_KICK1	- KICK1 component	LOCK0_KICK1 Register (Offset = 100Ch) [reset = 0h]

Copyright © 2025 Texas Instruments Incorporated

Table 6-526. DSS_CTRL Registers (continued)

Offset	Acronym	Register Name	Section
1010h	intr_raw_status	Interrupt Raw Status/Set Register	intr_raw_status Register (Offset = 1010h) [reset = X]
1014h	intr_enabled_status_clear	Interrupt Enabled Status/Clear register	intr_enabled_status_clear Register (Offset = 1014h) [reset = X]
1018h	intr_enable	Interrupt Enable register	intr_enable Register (Offset = 1018h) [reset = X]
101Ch	intr_enable_clear	Interrupt Enable Clear register	intr_enable_clear Register (Offset = 101Ch) [reset = X]
1020h	eoi	EOI register	eoi Register (Offset = 1020h) [reset = X]
1024h	fault_address	Fault Address register	fault_address Register (Offset = 1024h) [reset = 0h]
1028h	fault_type_status	Fault Type Status register	fault_type_status Register (Offset = 1028h) [reset = X]
102Ch	fault_attr_status	Fault Attribute Status register	fault_attr_status Register (Offset = 102Ch) [reset = 0h]
1030h	fault_clear	Fault Clear register	fault_clear Register (Offset = 1030h) [reset = X]

6.2.6.1 PID Register (Offset = 0h) [reset = 61800213h]

PID is shown in Figure 6-521 and described in Table 6-527.

Return to the Summary Table.

PID register

Figure 6-521. PID Register

31	30	29	28	27	26	25	24
PID_msb16							
R-6180h							
23	22	21	20	19	18	17	16
PID_msb16							
R-6180h							
15	14	13	12	11	10	9	8
PID_misc						PID_major	
R-0h						R-2h	
7	6	5	4	3	2	1	0
PID_custom		PID_minor					
R-0h		R-13h					

Copyright © 2025 Texas Instruments Incorporated

Table 6-527. PID Register Field Descriptions

Bit	Field	Type	Reset	Description
31-16	PID_msb16	R	6180h	
15-11	PID_misc	R	0h	
10-8	PID_major	R	2h	
7-6	PID_custom	R	0h	
5-0	PID_minor	R	13h	

6.2.6.2 DSS_SW_INT Register (Offset = 14h) [reset = X]

DSS_SW_INT is shown in Figure 6-522 and described in Table 6-528.

Return to the Summary Table.

Figure 6-522. DSS_SW_INT Register

31	30	29	28	27	26	25	24	23	22	21	20	19	18	17	16
RESERVED															
R/W-X															
15	14	13	12	11	10	9	8	7	6	5	4	3	2	1	0
RESERVED												dss_swint			
R/W-X												R/W-0h			

Table 6-528. DSS_SW_INT Register Field Descriptions

Bit	Field	Type	Reset	Description
31-4	RESERVED	R/W	X	
3-0	dss_swint	R/W	0h	Write pulse bit field: DSS SW Interrupt Write 1 : Generate an interrupt on DSS_SW_INT0

6.2.6.3 DSS_TPCC_A_ERRAGG_MASK Register (Offset = 18h) [reset = X]

DSS_TPCC_A_ERRAGG_MASK is shown in Figure 6-523 and described in Table 6-529.

Return to the Summary Table.

Figure 6-523. DSS_TPCC_A_ERRAGG_MASK Register

31	30	29	28	27	26	25	24
RESERVED					tptc_a1_read_access_error	tptc_a0_read_access_error	tpcc_a_read_access_error
R/W-X					R/W-0h	R/W-0h	R/W-0h
23	22	21	20	19	18	17	16
RESERVED					tptc_a1_write_access_error	tptc_a0_write_access_error	tpcc_a_write_access_error
R/W-X					R/W-0h	R/W-0h	R/W-0h
15	14	13	12	11	10	9	8
RESERVED							tpcc_a_parity_err
R/W-X							R/W-0h
7	6	5	4	3	2	1	0
RESERVED				tptc_a1_err	tptc_a0_err	tpcc_a_mpint	tpcc_a_errint
R/W-X				R/W-0h	R/W-0h	R/W-0h	R/W-0h

Copyright © 2025 Texas Instruments Incorporated

Figure 6-523. DSS_TPCC_A_ERRAGG_MASK Register (continued)

Table 6-529. DSS_TPCC_A_ERRAGG_MASK Register Field Descriptions

Bit	Field	Type	Reset	Description
31-27	RESERVED	R/W	X	
26	tptc_a1_read_access_error	R/W	0h	Mask Interrupt from DSS_TPTC_A1 to aggregated Interrupt DSS_TPCC_A_INTAGG 1 : Interrupt is Masked 0 : Interrupt is Unmasked
25	tptc_a0_read_access_error	R/W	0h	Mask Interrupt from DSS_TPTC_A0 to aggregated Interrupt DSS_TPCC_A_INTAGG 1 : Interrupt is Masked 0 : Interrupt is Unmasked
24	tpcc_a_read_access_error	R/W	0h	Mask Interrupt from DSS_TPCC_A to aggregated Interrupt DSS_TPCC_A_INTAGG 1 : Interrupt is Masked 0 : Interrupt is Unmasked
23-19	RESERVED	R/W	X	
18	tptc_a1_write_access_error	R/W	0h	Mask Interrupt from DSS_TPTC_A1 to aggregated Interrupt DSS_TPTC_A_INTAGG 1 : Interrupt is Masked 0 : Interrupt is Unmasked
17	tptc_a0_write_access_error	R/W	0h	Mask Interrupt from DSS_TPTC_A0 to aggregated Interrupt DSS_TPTC_A_INTAGG 1 : Interrupt is Masked 0 : Interrupt is Unmasked
16	tpcc_a_write_access_error	R/W	0h	Mask Interrupt from DSS_TPCC_A to aggregated Interrupt DSS_TPCC_A_INTAGG 1 : Interrupt is Masked 0 : Interrupt is Unmasked
15-9	RESERVED	R/W	X	
8	tpcc_a_parity_err	R/W	0h	Mask Interrupt from DSS_TPCC_A to aggregated Interrupt DSS_TPCC_A_INTAGG 1 : Interrupt is Masked 0 : Interrupt is Unmasked
7-4	RESERVED	R/W	X	
3	tptc_a1_err	R/W	0h	Mask Interrupt from DSS_TPTC_A1 to aggregated Interrupt DSS_TPCC_A_INTAGG 1 : Interrupt is Masked 0 : Interrupt is Unmasked
2	tptc_a0_err	R/W	0h	Mask Interrupt from DSS_TPTC_A0 to aggregated Interrupt DSS_TPCC_A_INTAGG 1 : Interrupt is Masked 0 : Interrupt is Unmasked
1	tpcc_a_mpint	R/W	0h	Mask Interrupt from DSS_TPCC_A to aggregated Interrupt DSS_TPCC_A_INTAGG 1 : Interrupt is Masked 0 : Interrupt is Unmasked
0	tpcc_a_errint	R/W	0h	Mask Interrupt from DSS_TPCC_A to aggregated Interrupt DSS_TPCC_A_INTAGG 1 : Interrupt is Masked 0 : Interrupt is Unmasked

6.2.6.4 DSS_TPCC_A_ERRAGG_STATUS Register (Offset = 1Ch) [reset = X]

DSS_TPCC_A_ERRAGG_STATUS is shown in Figure 6-524 and described in Table 6-530.

Return to the Summary Table.

Figure 6-524. DSS_TPCC_A_ERRAGG_STATUS Register

31	30	29	28	27	26	25	24
RESERVED					tptc_a1_read_access_error	tptc_a0_read_access_error	tpcc_a_read_access_error
R/W-X					R/W-0h	R/W-0h	R/W-0h
23	22	21	20	19	18	17	16
RESERVED					tptc_a1_write_access_error	tptc_a0_write_access_error	tpcc_a_write_access_error

Copyright © 2025 Texas Instruments Incorporated

Figure 6-524. DSS_TPCC_A_ERRAGG_STATUS Register (continued)

R/W-X					R/W-0h	R/W-0h	R/W-0h
15	14	13	12	11	10	9	8
RESERVED							tpcc_a_parity_err
R/W-X							R/W-0h
7	6	5	4	3	2	1	0
RESERVED				tptc_a1_err	tptc_a0_err	tpcc_a_mpint	tpcc_a_errint
R/W-X				R/W-0h	R/W-0h	R/W-0h	R/W-0h

Table 6-530. DSS_TPCC_A_ERRAGG_STATUS Register Field Descriptions

Bit	Field	Type	Reset	Description
31-27	RESERVED	R/W	X	
26	tptc_a1_read_access_error	R/W	0h	Status of Interrupt from DSS_TPTC_A1. Set only if Interupt is unmasked in DSS_TPCC_A_INTAGG_MASK Wrie 0x1 to clear this interrupt.
25	tptc_a0_read_access_error	R/W	0h	Status of Interrupt from DSS_TPTC_A0. Set only if Interupt is unmasked in DSS_TPCC_A_INTAGG_MASK Wrie 0x1 to clear this interrupt.
24	tpcc_a_read_access_error	R/W	0h	Status of Interrupt from DSS_TPCC_A. Set only if Interupt is unmasked in DSS_TPCC_A_INTAGG_MASK Wrie 0x1 to clear this interrupt.
23-19	RESERVED	R/W	X	
18	tptc_a1_write_access_error	R/W	0h	Status of Interrupt from DSS_TPTC_A1. Set only if Interupt is unmasked in DSS_TPTC_A_INTAGG_MASK Wrie 0x1 to clear this interrupt.
17	tptc_a0_write_access_error	R/W	0h	Status of Interrupt from DSS_TPTC_A0. Set only if Interupt is unmasked in DSS_TPTC_A_INTAGG_MASK Wrie 0x1 to clear this interrupt.
16	tpcc_a_write_access_error	R/W	0h	Status of Interrupt from DSS_TPCC_A. Set only if Interupt is unmasked in DSS_TPCC_A_INTAGG_MASK Wrie 0x1 to clear this interrupt.
15-9	RESERVED	R/W	X	
8	tpcc_a_parity_err	R/W	0h	Status of Interrupt from DSS_TPCC_A. Set only if Interupt is unmasked in DSS_TPCC_A_INTAGG_MASK Wrie 0x1 to clear this interrupt.
7-4	RESERVED	R/W	X	
3	tptc_a1_err	R/W	0h	Status of Interrupt from DSS_TPTC_A1. Set only if Interupt is unmasked in DSS_TPCC_A_INTAGG_MASK Wrie 0x1 to clear this interrupt.
2	tptc_a0_err	R/W	0h	Status of Interrupt from DSS_TPTC_A0. Set only if Interupt is unmasked in DSS_TPCC_A_INTAGG_MASK Wrie 0x1 to clear this interrupt.
1	tpcc_a_mpint	R/W	0h	Status of Interrupt from DSS_TPCC_A. Set only if Interupt is unmasked in DSS_TPCC_A_INTAGG_MASK Wrie 0x1 to clear this interrupt.
0	tpcc_a_errint	R/W	0h	Status of Interrupt from DSS_TPCC_A. Set only if Interupt is unmasked in DSS_TPCC_A_INTAGG_MASK Wrie 0x1 to clear this interrupt.

6.2.6.5 DSS_TPCC_A_ERRAGG_STATUS_RAW Register (Offset = 20h) [reset = X]

DSS_TPCC_A_ERRAGG_STATUS_RAW is shown in Figure 6-525 and described in Table 6-531.

Copyright © 2025 Texas Instruments Incorporated

Return to the Summary Table.

Figure 6-525. DSS_TPCC_A_ERRAGG_STATUS_RAW Register

31	30	29	28	27	26	25	24
RESERVED					tptc_a1_read_access_error	tptc_a0_read_access_error	tpcc_a_read_access_error
R/W-X					R/W-0h	R/W-0h	R/W-0h
23	22	21	20	19	18	17	16
RESERVED					tptc_a1_write_access_error	tptc_a0_write_access_error	tpcc_a_write_access_error
R/W-X					R/W-0h	R/W-0h	R/W-0h
15	14	13	12	11	10	9	8
RESERVED							tpcc_a_parity_err
R/W-X							R/W-0h
7	6	5	4	3	2	1	0
RESERVED				tptc_a1_err	tptc_a0_err	tpcc_a_mpint	tpcc_a_errint
R/W-X				R/W-0h	R/W-0h	R/W-0h	R/W-0h

Table 6-531. DSS_TPCC_A_ERRAGG_STATUS_RAW Register Field Descriptions

Bit	Field	Type	Reset	Description
31-27	RESERVED	R/W	X	
26	tptc_a1_read_access_error	R/W	0h	Raw Status of Interrupt from DSS_TPTC_A1. Set irrespective if the Interupt is masked or unmasked in DSS_TPCC_C_INTAGG_MASK
25	tptc_a0_read_access_error	R/W	0h	Raw Status of Interrupt from DSS_TPTC_A0. Set irrespective if the Interupt is masked or unmasked in DSS_TPCC_C_INTAGG_MASK
24	tpcc_a_read_access_error	R/W	0h	Raw Status of Interrupt from DSS_TPCC_A. Set irrespective if the Interupt is masked or unmasked in DSS_TPCC_C_INTAGG_MASK
23-19	RESERVED	R/W	X	
18	tptc_a1_write_access_error	R/W	0h	Raw Status of Interrupt from DSS_TPTC_A1. Set irrespective if the Interupt is masked or unmasked in DSS_TPTC_A_INTAGG_MASK
17	tptc_a0_write_access_error	R/W	0h	Raw Status of Interrupt from DSS_TPTC_A0. Set irrespective if the Interupt is masked or unmasked in DSS_TPTC_A_INTAGG_MASK
16	tpcc_a_write_access_error	R/W	0h	Raw Status of Interrupt from DSS_TPCC_A. Set irrespective if the Interupt is masked or unmasked in DSS_TPCC_C_INTAGG_MASK
15-9	RESERVED	R/W	X	
8	tpcc_a_parity_err	R/W	0h	Raw Status of Interrupt from DSS_TPCC_A. Set irrespective if the Interupt is masked or unmasked in DSS_TPCC_C_INTAGG_MASK
7-4	RESERVED	R/W	X	
3	tptc_a1_err	R/W	0h	Raw Status of Interrupt from DSS_TPTC_A1. Set irrespective if the Interupt is masked or unmasked in DSS_TPCC_C_INTAGG_MASK
2	tptc_a0_err	R/W	0h	Raw Status of Interrupt from DSS_TPTC_A0. Set irrespective if the Interupt is masked or unmasked in DSS_TPCC_C_INTAGG_MASK
1	tpcc_a_mpint	R/W	0h	Raw Status of Interrupt from DSS_TPCC_A. Set irrespective if the Interupt is masked or unmasked in DSS_TPCC_C_INTAGG_MASK
0	tpcc_a_errint	R/W	0h	Raw Status of Interrupt from DSS_TPCC_A. Set irrespective if the Interupt is masked or unmasked in DSS_TPCC_C_INTAGG_MASK

6.2.6.6 DSS_TPCC_A_INTAGG_MASK Register (Offset = 24h) [reset = X]

DSS_TPCC_A_INTAGG_MASK is shown in Figure 6-526 and described in Table 6-532.

Copyright © 2025 Texas Instruments Incorporated

Return to the Summary Table.

Figure 6-526. DSS_TPCC_A_INTAGG_MASK Register

31	30	29	28	27	26	25	24
RESERVED							
R/W-X							
23	22	21	20	19	18	17	16
RESERVED						tptc_a1	tptc_a0
R/W-X						R/W-0h	R/W-0h
15	14	13	12	11	10	9	8
RESERVED							tpcc_a_int7
R/W-X							R/W-0h
7	6	5	4	3	2	1	0
tpcc_a_int6	tpcc_a_int5	tpcc_a_int4	tpcc_a_int3	tpcc_a_int2	tpcc_a_int1	tpcc_a_int0	tpcc_a_intg
R/W-0h	R/W-0h	R/W-0h	R/W-0h	R/W-0h	R/W-0h	R/W-0h	R/W-0h

Table 6-532. DSS_TPCC_A_INTAGG_MASK Register Field Descriptions

Bit	Field	Type	Reset	Description
31-18	RESERVED	R/W	X	
17	tptc_a1	R/W	0h	Mask Interrupt from DSS_TPTC_A1 to aggregated Interrupt DSS_TPCC_A_INTAGG 1 : Interrupt is Masked 0 : Interrupt is Unmasked
16	tptc_a0	R/W	0h	Mask Interrupt from DSS_TPTC_A0 to aggregated Interrupt DSS_TPCC_A_INTAGG 1 : Interrupt is Masked 0 : Interrupt is Unmasked
15-9	RESERVED	R/W	X	
8	tpcc_a_int7	R/W	0h	Mask Interrupt from DSS_TPCC_A to aggregated Interrupt DSS_TPCC_A_INTAGG 1 : Interrupt is Masked 0 : Interrupt is Unmasked
7	tpcc_a_int6	R/W	0h	Mask Interrupt from DSS_TPCC_A to aggregated Interrupt DSS_TPCC_A_INTAGG 1 : Interrupt is Masked 0 : Interrupt is Unmasked
6	tpcc_a_int5	R/W	0h	Mask Interrupt from DSS_TPCC_A to aggregated Interrupt DSS_TPCC_A_INTAGG 1 : Interrupt is Masked 0 : Interrupt is Unmasked
5	tpcc_a_int4	R/W	0h	Mask Interrupt from DSS_TPCC_A to aggregated Interrupt DSS_TPCC_A_INTAGG 1 : Interrupt is Masked 0 : Interrupt is Unmasked
4	tpcc_a_int3	R/W	0h	Mask Interrupt from DSS_TPCC_A to aggregated Interrupt DSS_TPCC_A_INTAGG 1 : Interrupt is Masked 0 : Interrupt is Unmasked
3	tpcc_a_int2	R/W	0h	Mask Interrupt from DSS_TPCC_A to aggregated Interrupt DSS_TPCC_A_INTAGG 1 : Interrupt is Masked 0 : Interrupt is Unmasked
2	tpcc_a_int1	R/W	0h	Mask Interrupt from DSS_TPCC_A to aggregated Interrupt DSS_TPCC_A_INTAGG 1 : Interrupt is Masked 0 : Interrupt is Unmasked
1	tpcc_a_int0	R/W	0h	Mask Interrupt from DSS_TPCC_A to aggregated Interrupt DSS_TPCC_A_INTAGG 1 : Interrupt is Masked 0 : Interrupt is Unmasked
0	tpcc_a_intg	R/W	0h	Mask Interrupt from DSS_TPCC_A to aggregated Interrupt DSS_TPCC_A_INTAGG 1 : Interrupt is Masked 0 : Interrupt is Unmasked

Copyright © 2025 Texas Instruments Incorporated

6.2.6.7 DSS_TPCC_A_INTAGG_STATUS Register (Offset = 28h) [reset = X]

DSS_TPCC_A_INTAGG_STATUS is shown in Figure 6-527 and described in Table 6-533.

Return to the Summary Table.

Figure 6-527. DSS_TPCC_A_INTAGG_STATUS Register

31	30	29	28	27	26	25	24
RESERVED							
R/W-X							
23	22	21	20	19	18	17	16
RESERVED						tptc_a1	tptc_a0
R/W-X						R/W-0h	R/W-0h
15	14	13	12	11	10	9	8
RESERVED							tpcc_a_int7
R/W-X							R/W-0h
7	6	5	4	3	2	1	0
tpcc_a_int6	tpcc_a_int5	tpcc_a_int4	tpcc_a_int3	tpcc_a_int2	tpcc_a_int1	tpcc_a_int0	tpcc_a_intg
R/W-0h	R/W-0h	R/W-0h	R/W-0h	R/W-0h	R/W-0h	R/W-0h	R/W-0h

Table 6-533. DSS_TPCC_A_INTAGG_STATUS Register Field Descriptions

Bit	Field	Type	Reset	Description
31-18	RESERVED	R/W	X	
17	tptc_a1	R/W	0h	Status of Interrupt from DSS_TPTC_A1. Set only if Interupt is unmasked in DSS_TPCC_A_INTAGG_MASK Wrie 0x1 to clear this interrupt.
16	tptc_a0	R/W	0h	Status of Interrupt from DSS_TPTC_A0. Set only if Interupt is unmasked in DSS_TPCC_A_INTAGG_MASK Wrie 0x1 to clear this interrupt.
15-9	RESERVED	R/W	X	
8	tpcc_a_int7	R/W	0h	Status of Interrupt from DSS_TPCC_A. Set only if Interupt is unmasked in DSS_TPCC_A_INTAGG_MASK Wrie 0x1 to clear this interrupt.
7	tpcc_a_int6	R/W	0h	Status of Interrupt from DSS_TPCC_A. Set only if Interupt is unmasked in DSS_TPCC_A_INTAGG_MASK Wrie 0x1 to clear this interrupt.
6	tpcc_a_int5	R/W	0h	Status of Interrupt from DSS_TPCC_A. Set only if Interupt is unmasked in DSS_TPCC_A_INTAGG_MASK Wrie 0x1 to clear this interrupt.
5	tpcc_a_int4	R/W	0h	Status of Interrupt from DSS_TPCC_A. Set only if Interupt is unmasked in DSS_TPCC_A_INTAGG_MASK Wrie 0x1 to clear this interrupt.
4	tpcc_a_int3	R/W	0h	Status of Interrupt from DSS_TPCC_A. Set only if Interupt is unmasked in DSS_TPCC_A_INTAGG_MASK Wrie 0x1 to clear this interrupt.
3	tpcc_a_int2	R/W	0h	Status of Interrupt from DSS_TPCC_A. Set only if Interupt is unmasked in DSS_TPCC_A_INTAGG_MASK Wrie 0x1 to clear this interrupt.
2	tpcc_a_int1	R/W	0h	Status of Interrupt from DSS_TPCC_A. Set only if Interupt is unmasked in DSS_TPCC_A_INTAGG_MASK Wrie 0x1 to clear this interrupt.
1	tpcc_a_int0	R/W	0h	Status of Interrupt from DSS_TPCC_A. Set only if Interupt is unmasked in DSS_TPCC_A_INTAGG_MASK Wrie 0x1 to clear this interrupt.

Copyright © 2025 Texas Instruments Incorporated

Table 6-533. DSS_TPCC_A_INTAGG_STATUS Register Field Descriptions (continued)

Bit	Field	Type	Reset	Description
0	tpcc_a_intg	R/W	0h	Status of Interrupt from DSS_TPCC_A. Set only if Interupt is unmasked in DSS_TPCC_A_INTAGG_MASK Wrie 0x1 to clear this interrupt.

6.2.6.8 DSS_TPCC_A_INTAGG_STATUS_RAW Register (Offset = 2Ch) [reset = X]

DSS_TPCC_A_INTAGG_STATUS_RAW is shown in Figure 6-528 and described in Table 6-534.

Return to the Summary Table.

Figure 6-528. DSS_TPCC_A_INTAGG_STATUS_RAW Register

31	30	29	28	27	26	25	24
RESERVED							
R/W-X							
23	22	21	20	19	18	17	16
RESERVED						tptc_a1	tptc_a0
R/W-X						R/W-0h	R/W-0h
15	14	13	12	11	10	9	8
RESERVED							tpcc_a_int7
R/W-X							R/W-0h
7	6	5	4	3	2	1	0
tpcc_a_int6	tpcc_a_int5	tpcc_a_int4	tpcc_a_int3	tpcc_a_int2	tpcc_a_int1	tpcc_a_int0	tpcc_a_intg
R/W-0h	R/W-0h	R/W-0h	R/W-0h	R/W-0h	R/W-0h	R/W-0h	R/W-0h

Table 6-534. DSS_TPCC_A_INTAGG_STATUS_RAW Register Field Descriptions

Bit	Field	Type	Reset	Description
31-18	RESERVED	R/W	X	
17	tptc_a1	R/W	0h	Raw Status of Interrupt from DSS_TPTC_A1. Set irrespective if the Interupt is masked or unmasked in DSS_TPCC_A_INTAGG_MASK
16	tptc_a0	R/W	0h	Raw Status of Interrupt from DSS_TPTC_A0. Set irrespective if the Interupt is masked or unmasked in DSS_TPCC_A_INTAGG_MASK
15-9	RESERVED	R/W	X	
8	tpcc_a_int7	R/W	0h	Raw Status of Interrupt from DSS_TPCC_A. Set irrespective if the Interupt is masked or unmasked in DSS_TPCC_A_INTAGG_MASK
7	tpcc_a_int6	R/W	0h	Raw Status of Interrupt from DSS_TPCC_A. Set irrespective if the Interupt is masked or unmasked in DSS_TPCC_A_INTAGG_MASK
6	tpcc_a_int5	R/W	0h	Raw Status of Interrupt from DSS_TPCC_A. Set irrespective if the Interupt is masked or unmasked in DSS_TPCC_A_INTAGG_MASK
5	tpcc_a_int4	R/W	0h	Raw Status of Interrupt from DSS_TPCC_A. Set irrespective if the Interupt is masked or unmasked in DSS_TPCC_A_INTAGG_MASK
4	tpcc_a_int3	R/W	0h	Raw Status of Interrupt from DSS_TPCC_A. Set irrespective if the Interupt is masked or unmasked in DSS_TPCC_A_INTAGG_MASK
3	tpcc_a_int2	R/W	0h	Raw Status of Interrupt from DSS_TPCC_A. Set irrespective if the Interupt is masked or unmasked in DSS_TPCC_A_INTAGG_MASK
2	tpcc_a_int1	R/W	0h	Raw Status of Interrupt from DSS_TPCC_A. Set irrespective if the Interupt is masked or unmasked in DSS_TPCC_A_INTAGG_MASK
1	tpcc_a_int0	R/W	0h	Raw Status of Interrupt from DSS_TPCC_A. Set irrespective if the Interupt is masked or unmasked in DSS_TPCC_A_INTAGG_MASK

Copyright © 2025 Texas Instruments Incorporated

Table 6-534. DSS_TPCC_A_INTAGG_STATUS_RAW Register Field Descriptions (continued)

Bit	Field	Type	Reset	Description
0	tpcc_a_intg	R/W	0h	Raw Status of Interrupt from DSS_TPCC_A. Set irrespective if the Interupt is masked or unmasked in DSS_TPCC_A_INTAGG_MASK

6.2.6.9 DSS_TPCC_B_ERRAGG_MASK Register (Offset = 30h) [reset = X]

DSS_TPCC_B_ERRAGG_MASK is shown in Figure 6-529 and described in Table 6-535.

Return to the Summary Table.

Figure 6-529. DSS_TPCC_B_ERRAGG_MASK Register

31	30	29	28	27	26	25	24
RESERVED					tptc_b1_read_access_error	tptc_b0_read_access_error	tpcc_b_read_access_error
R/W-X					R/W-0h	R/W-0h	R/W-0h
23	22	21	20	19	18	17	16
RESERVED					tptc_b1_write_access_error	tptc_b0_write_access_error	tpcc_b_write_access_error
R/W-X					R/W-0h	R/W-0h	R/W-0h
15	14	13	12	11	10	9	8
RESERVED							tpcc_b_parity_err
R/W-X							R/W-0h
7	6	5	4	3	2	1	0
RESERVED				tptc_b1_err	tptc_b0_err	tpcc_b_mpint	tpcc_b_errint
R/W-X				R/W-0h	R/W-0h	R/W-0h	R/W-0h

Table 6-535. DSS_TPCC_B_ERRAGG_MASK Register Field Descriptions

Bit	Field	Type	Reset	Description
31-27	RESERVED	R/W	X	
26	tptc_b1_read_access_error	R/W	0h	Mask Error from DSS_TPTC_B1 to aggregated Error DSS_TPCC_B_ERRAGG 1 : Error is Masked 0 : Error is Unmasked
25	tptc_b0_read_access_error	R/W	0h	Mask Error from DSS_TPTC_B0 to aggregated Error DSS_TPCC_B_ERRAGG 1 : Error is Masked 0 : Error is Unmasked
24	tpcc_b_read_access_error	R/W	0h	Mask Error from DSS_TPCC_B to aggregated Error DSS_TPCC_B_ERRAGG 1 : Error is Masked 0 : Error is Unmasked
23-19	RESERVED	R/W	X	
18	tptc_b1_write_access_error	R/W	0h	Mask Error from DSS_TPTC_B1 to aggregated Error DSS_TPCC_B_ERRAGG 1 : Error is Masked 0 : Error is Unmasked
17	tptc_b0_write_access_error	R/W	0h	Mask Error from DSS_TPTC_B0 to aggregated Error DSS_TPCC_B_ERRAGG 1 : Error is Masked 0 : Error is Unmasked
16	tpcc_b_write_access_error	R/W	0h	Mask Error from DSS_TPCC_B to aggregated Error DSS_TPCC_B_ERRAGG 1 : Error is Masked 0 : Error is Unmasked
15-9	RESERVED	R/W	X	
8	tpcc_b_parity_err	R/W	0h	Mask Error from DSS_TPCC_B to aggregated Error DSS_TPCC_B_ERRAGG 1 : Error is Masked 0 : Error is Unmasked
7-4	RESERVED	R/W	X	
3	tptc_b1_err	R/W	0h	Mask Error from DSS_TPTC_B1 to aggregated Error DSS_TPCC_B_ERRAGG 1 : Error is Masked 0 : Error is Unmasked
2	tptc_b0_err	R/W	0h	Mask Error from DSS_TPTC_B0 to aggregated Error DSS_TPCC_B_ERRAGG 1 : Error is Masked 0 : Error is Unmasked

Copyright © 2025 Texas Instruments Incorporated

Table 6-535. DSS_TPCC_B_ERRAGG_MASK Register Field Descriptions (continued)

Bit	Field	Type	Reset	Description
1	tpcc_b_mpint	R/W	0h	Mask Error from DSS_TPCC_B to aggregated Error DSS_TPCC_B_ERRAGG 1 : Error is Masked 0 : Error is Unmasked
0	tpcc_b_errint	R/W	0h	Mask Error from DSS_TPCC_B to aggregated Error DSS_TPCC_B_ERRAGG 1 : Error is Masked 0 : Error is Unmasked

6.2.6.10 DSS_TPCC_B_ERRAGG_STATUS Register (Offset = 34h) [reset = X]

DSS_TPCC_B_ERRAGG_STATUS is shown in Figure 6-530 and described in Table 6-536.

Return to the Summary Table.

Figure 6-530. DSS_TPCC_B_ERRAGG_STATUS Register

31	30	29	28	27	26	25	24
RESERVED					tptc_b1_read_access_error	tptc_b0_read_access_error	tpcc_b_read_access_error
R/W-X					R/W-0h	R/W-0h	R/W-0h
23	22	21	20	19	18	17	16
RESERVED					tptc_b1_write_access_error	tptc_b0_write_access_error	tpcc_b_write_access_error
R/W-X					R/W-0h	R/W-0h	R/W-0h
15	14	13	12	11	10	9	8
RESERVED							tpcc_b_parity_err
R/W-X							R/W-0h
7	6	5	4	3	2	1	0
RESERVED				tptc_b1_err	tptc_b0_err	tpcc_b_mpint	tpcc_b_errint
R/W-X				R/W-0h	R/W-0h	R/W-0h	R/W-0h

Table 6-536. DSS_TPCC_B_ERRAGG_STATUS Register Field Descriptions

Bit	Field	Type	Reset	Description
31-27	RESERVED	R/W	X	
26	tptc_b1_read_access_error	R/W	0h	Status of Error from DSS_TPTC_B1. Set only if Interupt is unmasked in DSS_TPCC_B_ERRAGG_MASK Wrie 0x1 to clear this Error.
25	tptc_b0_read_access_error	R/W	0h	Status of Error from DSS_TPTC_B0. Set only if Interupt is unmasked in DSS_TPCC_B_ERRAGG_MASK Wrie 0x1 to clear this Error.
24	tpcc_b_read_access_error	R/W	0h	Status of Error from DSS_TPCC_B. Set only if Interupt is unmasked in DSS_TPCC_B_ERRAGG_MASK Wrie 0x1 to clear this Error.
23-19	RESERVED	R/W	X	
18	tptc_b1_write_access_error	R/W	0h	Status of Error from DSS_TPTC_B1. Set only if Interupt is unmasked in DSS_TPCC_B_ERRAGG_MASK Wrie 0x1 to clear this Error.
17	tptc_b0_write_access_error	R/W	0h	Status of Error from DSS_TPTC_B0. Set only if Interupt is unmasked in DSS_TPCC_B_ERRAGG_MASK Wrie 0x1 to clear this Error.
16	tpcc_b_write_access_error	R/W	0h	Status of Error from DSS_TPCC_B. Set only if Interupt is unmasked in DSS_TPCC_B_ERRAGG_MASK Wrie 0x1 to clear this Error.
15-9	RESERVED	R/W	X	
8	tpcc_b_parity_err	R/W	0h	Status of Error from DSS_TPCC_B. Set only if Interupt is unmasked in DSS_TPCC_B_ERRAGG_MASK Wrie 0x1 to clear this Error.
7-4	RESERVED	R/W	X	

Copyright © 2025 Texas Instruments Incorporated

Table 6-536. DSS_TPCC_B_ERRAGG_STATUS Register Field Descriptions (continued)

Bit	Field	Type	Reset	Description
3	tptc_b1_err	R/W	0h	Status of Error from DSS_TPCC_B1. Set only if Interupt is unmasked in DSS_TPCC_B_ERRAGG_MASK Wrie 0x1 to clear this Error.
2	tptc_b0_err	R/W	0h	Status of Error from DSS_TPTC_B0. Set only if Interupt is unmasked in DSS_TPCC_B_ERRAGG_MASK Wrie 0x1 to clear this Error.
1	tpcc_b_mpint	R/W	0h	Status of Error from DSS_TPCC_B. Set only if Interupt is unmasked in DSS_TPCC_B_ERRAGG_MASK Wrie 0x1 to clear this Error.
0	tpcc_b_errint	R/W	0h	Status of Error from DSS_TPCC_B. Set only if Interupt is unmasked in DSS_TPCC_B_ERRAGG_MASK Wrie 0x1 to clear this Error.

6.2.6.11 DSS_TPCC_B_ERRAGG_STATUS_RAW Register (Offset = 38h) [reset = X]

DSS_TPCC_B_ERRAGG_STATUS_RAW is shown in Figure 6-531 and described in Table 6-537.

Return to the Summary Table.

Figure 6-531. DSS_TPCC_B_ERRAGG_STATUS_RAW Register

31	30	29	28	27	26	25	24
RESERVED					tptc_b1_read_access_error	tptc_b0_read_access_error	tpcc_b_read_access_error
R/W-X					R/W-0h	R/W-0h	R/W-0h
23	22	21	20	19	18	17	16
RESERVED					tptc_b1_write_access_error	tptc_b0_write_access_error	tpcc_b_write_access_error
R/W-X					R/W-0h	R/W-0h	R/W-0h
15	14	13	12	11	10	9	8
RESERVED							tpcc_b_parity_err
R/W-X							R/W-0h
7	6	5	4	3	2	1	0
RESERVED				tptc_b1_err	tptc_b0_err	tpcc_b_mpint	tpcc_b_errint
R/W-X				R/W-0h	R/W-0h	R/W-0h	R/W-0h

Table 6-537. DSS_TPCC_B_ERRAGG_STATUS_RAW Register Field Descriptions

Bit	Field	Type	Reset	Description
31-27	RESERVED	R/W	X	
26	tptc_b1_read_access_error	R/W	0h	Raw Status of Error from DSS_TPTC_B1. Set irrespective if the Interupt is masked or unmasked in DSS_TPCC_B_ERRAGG_MASK
25	tptc_b0_read_access_error	R/W	0h	Raw Status of Error from DSS_TPTC_B0. Set irrespective if the Interupt is masked or unmasked in DSS_TPCC_B_ERRAGG_MASK
24	tpcc_b_read_access_error	R/W	0h	Raw Status of Error from DSS_TPCC_B. Set irrespective if the Interupt is masked or unmasked in DSS_TPCC_B_ERRAGG_MASK
23-19	RESERVED	R/W	X	
18	tptc_b1_write_access_error	R/W	0h	Raw Status of Error from DSS_TPTC_B1. Set irrespective if the Interupt is masked or unmasked in DSS_TPCC_B_ERRAGG_MASK
17	tptc_b0_write_access_error	R/W	0h	Raw Status of Error from DSS_TPTC_B0. Set irrespective if the Interupt is masked or unmasked in DSS_TPCC_B_ERRAGG_MASK
16	tpcc_b_write_access_error	R/W	0h	Raw Status of Error from DSS_TPCC_B. Set irrespective if the Interupt is masked or unmasked in DSS_TPCC_B_ERRAGG_MASK
15-9	RESERVED	R/W	X	

Copyright © 2025 Texas Instruments Incorporated

Table 6-537. DSS_TPCC_B_ERRAGG_STATUS_RAW Register Field Descriptions (continued)

Bit	Field	Type	Reset	Description
8	tpcc_b_parity_err	R/W	0h	Raw Status of Error from DSS_TPCC_B. Set irrespective if the Interupt is masked or unmasked in DSS_TPCC_B_ERRAGG_MASK
7-4	RESERVED	R/W	X	
3	tptc_b1_err	R/W	0h	Raw Status of Error from DSS_TPCC_B1. Set irrespective if the Interupt is masked or unmasked in DSS_TPCC_B_ERRAGG_MASK
2	tptc_b0_err	R/W	0h	Raw Status of Error from DSS_TPTC_B0. Set irrespective if the Interupt is masked or unmasked in DSS_TPCC_B_ERRAGG_MASK
1	tpcc_b_mpint	R/W	0h	Raw Status of Error from DSS_TPCC_B. Set irrespective if the Interupt is masked or unmasked in DSS_TPCC_B_ERRAGG_MASK
0	tpcc_b_errint	R/W	0h	Raw Status of Error from DSS_TPCC_B. Set irrespective if the Interupt is masked or unmasked in DSS_TPCC_B_ERRAGG_MASK

6.2.6.12 DSS_TPCC_B_INTAGG_MASK Register (Offset = 3Ch) [reset = X]

DSS_TPCC_B_INTAGG_MASK is shown in Figure 6-532 and described in Table 6-538.

Return to the Summary Table.

Figure 6-532. DSS_TPCC_B_INTAGG_MASK Register

31	30	29	28	27	26	25	24
RESERVED							
R/W-X							
23	22	21	20	19	18	17	16
RESERVED						tptc_b1	tptc_b0
R/W-X						R/W-0h	R/W-0h
15	14	13	12	11	10	9	8
RESERVED							tpcc_b_int7
R/W-X							R/W-0h
7	6	5	4	3	2	1	0
tpcc_b_int6	tpcc_b_int5	tpcc_b_int4	tpcc_b_int3	tpcc_b_int2	tpcc_b_int1	tpcc_b_int0	tpcc_b_intg
R/W-0h	R/W-0h	R/W-0h	R/W-0h	R/W-0h	R/W-0h	R/W-0h	R/W-0h

Table 6-538. DSS_TPCC_B_INTAGG_MASK Register Field Descriptions

Bit	Field	Type	Reset	Description
31-18	RESERVED	R/W	X	
17	tptc_b1	R/W	0h	Mask Interrupt from DSS_TPTC_B1 to aggregated Interrupt DSS_TPCC_B_INTAGG 1 : Interrupt is Masked 0 : Interrupt is Unmasked
16	tptc_b0	R/W	0h	Mask Interrupt from DSS_TPTC_B0 to aggregated Interrupt DSS_TPCC_B_INTAGG 1 : Interrupt is Masked 0 : Interrupt is Unmasked
15-9	RESERVED	R/W	X	
8	tpcc_b_int7	R/W	0h	Mask Interrupt from DSS_TPCC_B to aggregated Interrupt DSS_TPCC_B_INTAGG 1 : Interrupt is Masked 0 : Interrupt is Unmasked
7	tpcc_b_int6	R/W	0h	Mask Interrupt from DSS_TPCC_B to aggregated Interrupt DSS_TPCC_B_INTAGG 1 : Interrupt is Masked 0 : Interrupt is Unmasked
6	tpcc_b_int5	R/W	0h	Mask Interrupt from DSS_TPCC_B to aggregated Interrupt DSS_TPCC_B_INTAGG 1 : Interrupt is Masked 0 : Interrupt is Unmasked

Copyright © 2025 Texas Instruments Incorporated

Table 6-538. DSS_TPCC_B_INTAGG_MASK Register Field Descriptions (continued)

Bit	Field	Type	Reset	Description
5	tpcc_b_int4	R/W	0h	Mask Interrupt from DSS_TPCC_B to aggregated Interrupt DSS_TPCC_B_INTAGG 1 : Interrupt is Masked 0 : Interrupt is Unmasked
4	tpcc_b_int3	R/W	0h	Mask Interrupt from DSS_TPCC_B to aggregated Interrupt DSS_TPCC_B_INTAGG 1 : Interrupt is Masked 0 : Interrupt is Unmasked
3	tpcc_b_int2	R/W	0h	Mask Interrupt from DSS_TPCC_B to aggregated Interrupt DSS_TPCC_B_INTAGG 1 : Interrupt is Masked 0 : Interrupt is Unmasked
2	tpcc_b_int1	R/W	0h	Mask Interrupt from DSS_TPCC_B to aggregated Interrupt DSS_TPCC_B_INTAGG 1 : Interrupt is Masked 0 : Interrupt is Unmasked
1	tpcc_b_int0	R/W	0h	Mask Interrupt from DSS_TPCC_B to aggregated Interrupt DSS_TPCC_B_INTAGG 1 : Interrupt is Masked 0 : Interrupt is Unmasked
0	tpcc_b_intg	R/W	0h	Mask Interrupt from DSS_TPCC_B to aggregated Interrupt DSS_TPCC_B_INTAGG 1 : Interrupt is Masked 0 : Interrupt is Unmasked

6.2.6.13 DSS_TPCC_B_INTAGG_STATUS Register (Offset = 40h) [reset = X]

DSS_TPCC_B_INTAGG_STATUS is shown in Figure 6-533 and described in Table 6-539.

Return to the Summary Table.

Figure 6-533. DSS_TPCC_B_INTAGG_STATUS Register

31	30	29	28	27	26	25	24
RESERVED							
R/W-X							
23	22	21	20	19	18	17	16
RESERVED						tptc_b1	tptc_b0
R/W-X						R/W-0h	R/W-0h
15	14	13	12	11	10	9	8
RESERVED							tpcc_b_int7
R/W-X							R/W-0h
7	6	5	4	3	2	1	0
tpcc_b_int6	tpcc_b_int5	tpcc_b_int4	tpcc_b_int3	tpcc_b_int2	tpcc_b_int1	tpcc_b_int0	tpcc_b_intg
R/W-0h	R/W-0h	R/W-0h	R/W-0h	R/W-0h	R/W-0h	R/W-0h	R/W-0h

Table 6-539. DSS_TPCC_B_INTAGG_STATUS Register Field Descriptions

Bit	Field	Type	Reset	Description
31-18	RESERVED	R/W	X	
17	tptc_b1	R/W	0h	Status of Interrupt from DSS_TPTC_B1. Set only if Interupt is unmasked in DSS_TPCC_B_INTAGG_MASK Wrie 0x1 to clear this interrupt.
16	tptc_b0	R/W	0h	Status of Interrupt from DSS_TPTC_B0. Set only if Interupt is unmasked in DSS_TPCC_B_INTAGG_MASK Wrie 0x1 to clear this interrupt.
15-9	RESERVED	R/W	X	

Copyright © 2025 Texas Instruments Incorporated

Table 6-539. DSS_TPCC_B_INTAGG_STATUS Register Field Descriptions (continued)

Bit	Field	Type	Reset	Description
8	tpcc_b_int7	R/W	0h	Status of Interrupt from DSS_TPCC_B. Set only if Interupt is unmasked in DSS_TPCC_B_INTAGG_MASK Wrie 0x1 to clear this interrupt.
7	tpcc_b_int6	R/W	0h	Status of Interrupt from DSS_TPCC_B. Set only if Interupt is unmasked in DSS_TPCC_B_INTAGG_MASK Wrie 0x1 to clear this interrupt.
6	tpcc_b_int5	R/W	0h	Status of Interrupt from DSS_TPCC_B. Set only if Interupt is unmasked in DSS_TPCC_B_INTAGG_MASK Wrie 0x1 to clear this interrupt.
5	tpcc_b_int4	R/W	0h	Status of Interrupt from DSS_TPCC_B. Set only if Interupt is unmasked in DSS_TPCC_B_INTAGG_MASK Wrie 0x1 to clear this interrupt.
4	tpcc_b_int3	R/W	0h	Status of Interrupt from DSS_TPCC_B. Set only if Interupt is unmasked in DSS_TPCC_B_INTAGG_MASK Wrie 0x1 to clear this interrupt.
3	tpcc_b_int2	R/W	0h	Status of Interrupt from DSS_TPCC_B. Set only if Interupt is unmasked in DSS_TPCC_B_INTAGG_MASK Wrie 0x1 to clear this interrupt.
2	tpcc_b_int1	R/W	0h	Status of Interrupt from DSS_TPCC_B. Set only if Interupt is unmasked in DSS_TPCC_B_INTAGG_MASK Wrie 0x1 to clear this interrupt.
1	tpcc_b_int0	R/W	0h	Status of Interrupt from DSS_TPCC_B. Set only if Interupt is unmasked in DSS_TPCC_B_INTAGG_MASK Wrie 0x1 to clear this interrupt.
0	tpcc_b_intg	R/W	0h	Status of Interrupt from DSS_TPCC_B. Set only if Interupt is unmasked in DSS_TPCC_B_INTAGG_MASK Wrie 0x1 to clear this interrupt.

6.2.6.14 DSS_TPCC_B_INTAGG_STATUS_RAW Register (Offset = 44h) [reset = X]

DSS_TPCC_B_INTAGG_STATUS_RAW is shown in Figure 6-534 and described in Table 6-540.

Return to the Summary Table.

Figure 6-534. DSS_TPCC_B_INTAGG_STATUS_RAW Register

31	30	29	28	27	26	25	24
RESERVED							
R/W-X							
23	22	21	20	19	18	17	16
RESERVED						tptc_b1	tptc_b0
R/W-X						R/W-0h	R/W-0h
15	14	13	12	11	10	9	8
RESERVED							tpcc_b_int7
R/W-X							R/W-0h
7	6	5	4	3	2	1	0
tpcc_b_int6	tpcc_b_int5	tpcc_b_int4	tpcc_b_int3	tpcc_b_int2	tpcc_b_int1	tpcc_b_int0	tpcc_b_intg
R/W-0h	R/W-0h	R/W-0h	R/W-0h	R/W-0h	R/W-0h	R/W-0h	R/W-0h

Table 6-540. DSS_TPCC_B_INTAGG_STATUS_RAW Register Field Descriptions

Bit	Field	Type	Reset	Description
31-18	RESERVED	R/W	X	

Copyright © 2025 Texas Instruments Incorporated

Table 6-540. DSS_TPCC_B_INTAGG_STATUS_RAW Register Field Descriptions (continued)

Bit	Field	Type	Reset	Description
17	tptc_b1	R/W	0h	Raw Status of Interrupt from DSS_TPTC_B1. Set irrespective if the Interupt is masked or unmasked in DSS_TPCC_B_INTAGG_MASK
16	tptc_b0	R/W	0h	Raw Status of Interrupt from DSS_TPTC_B0. Set irrespective if the Interupt is masked or unmasked in DSS_TPCC_B_INTAGG_MASK
15-9	RESERVED	R/W	X	
8	tpcc_b_int7	R/W	0h	Raw Status of Interrupt from DSS_TPCC_B. Set irrespective if the Interupt is masked or unmasked in DSS_TPCC_B_INTAGG_MASK
7	tpcc_b_int6	R/W	0h	Raw Status of Interrupt from DSS_TPCC_B. Set irrespective if the Interupt is masked or unmasked in DSS_TPCC_B_INTAGG_MASK
6	tpcc_b_int5	R/W	0h	Raw Status of Interrupt from DSS_TPCC_B. Set irrespective if the Interupt is masked or unmasked in DSS_TPCC_B_INTAGG_MASK
5	tpcc_b_int4	R/W	0h	Raw Status of Interrupt from DSS_TPCC_B. Set irrespective if the Interupt is masked or unmasked in DSS_TPCC_B_INTAGG_MASK
4	tpcc_b_int3	R/W	0h	Raw Status of Interrupt from DSS_TPCC_B. Set irrespective if the Interupt is masked or unmasked in DSS_TPCC_B_INTAGG_MASK
3	tpcc_b_int2	R/W	0h	Raw Status of Interrupt from DSS_TPCC_B. Set irrespective if the Interupt is masked or unmasked in DSS_TPCC_B_INTAGG_MASK
2	tpcc_b_int1	R/W	0h	Raw Status of Interrupt from DSS_TPCC_B. Set irrespective if the Interupt is masked or unmasked in DSS_TPCC_B_INTAGG_MASK
1	tpcc_b_int0	R/W	0h	Raw Status of Interrupt from DSS_TPCC_B. Set irrespective if the Interupt is masked or unmasked in DSS_TPCC_B_INTAGG_MASK
0	tpcc_b_intg	R/W	0h	Raw Status of Interrupt from DSS_TPCC_B. Set irrespective if the Interupt is masked or unmasked in DSS_TPCC_B_INTAGG_MASK

6.2.6.15 DSS_TPCC_C_ERRAGG_MASK Register (Offset = 48h) [reset = X]

DSS_TPCC_C_ERRAGG_MASK is shown in Figure 6-535 and described in Table 6-541.

Return to the Summary Table.

Figure 6-535. DSS_TPCC_C_ERRAGG_MASK Register

31	30	29	28	27	26	25	24
RESERVED	tptc_c5_read_access_error	tptc_c4_read_access_error	tptc_c3_read_access_error	tptc_c2_read_access_error	tptc_c1_read_access_error	tptc_c0_read_access_error	tpcc_c_read_access_error
R/W-X	R/W-0h	R/W-0h	R/W-0h	R/W-0h	R/W-0h	R/W-0h	R/W-0h
23	22	21	20	19	18	17	16
RESERVED	tptc_c5_write_access_error	tptc_c4_write_access_error	tptc_c3_write_access_error	tptc_c2_write_access_error	tptc_c1_write_access_error	tptc_c0_write_access_error	tpcc_c_write_access_error
R/W-X	R/W-0h	R/W-0h	R/W-0h	R/W-0h	R/W-0h	R/W-0h	R/W-0h
15	14	13	12	11	10	9	8
RESERVED							tpcc_c_parity_err
R/W-X							R/W-0h
7	6	5	4	3	2	1	0
tptc_c5_err	tptc_c4_err	tptc_c3_err	tptc_c2_err	tptc_c1_err	tptc_c0_err	tpcc_c_mpint	tpcc_c_errint
R/W-0h	R/W-0h	R/W-0h	R/W-0h	R/W-0h	R/W-0h	R/W-0h	R/W-0h

Table 6-541. DSS_TPCC_C_ERRAGG_MASK Register Field Descriptions

Bit	Field	Type	Reset	Description
31	RESERVED	R/W	X	

Copyright © 2025 Texas Instruments Incorporated

Table 6-541. DSS_TPCC_C_ERRAGG_MASK Register Field Descriptions (continued)

Bit	Field	Type	Reset	Description
30	tptc_c5_read_access_error	R/W	0h	Mask Error from DSS_TPTC_C5 to aggregated Error DSS_TPCC_C_ERRAGG 1 : Error is Masked 0 : Error is Unmasked
29	tptc_c4_read_access_error	R/W	0h	Mask Error from DSS_TPTC_C4 to aggregated Error DSS_TPCC_C_ERRAGG 1 : Error is Masked 0 : Error is Unmasked
28	tptc_c3_read_access_error	R/W	0h	Mask Error from DSS_TPTC_C3 to aggregated Error DSS_TPCC_C_ERRAGG 1 : Error is Masked 0 : Error is Unmasked
27	tptc_c2_read_access_error	R/W	0h	Mask Error from DSS_TPTC_C2 to aggregated Error DSS_TPCC_C_ERRAGG 1 : Error is Masked 0 : Error is Unmasked
26	tptc_c1_read_access_error	R/W	0h	Mask Error from DSS_TPTC_C1 to aggregated Error DSS_TPCC_C_ERRAGG 1 : Error is Masked 0 : Error is Unmasked
25	tptc_c0_read_access_error	R/W	0h	Mask Error from DSS_TPTC_C0 to aggregated Error DSS_TPCC_C_ERRAGG 1 : Error is Masked 0 : Error is Unmasked
24	tpcc_c_read_access_error	R/W	0h	Mask Error from DSS_TPCC_C to aggregated Error DSS_TPCC_C_ERRAGG 1 : Error is Masked 0 : Error is Unmasked
23	RESERVED	R/W	X	
22	tptc_c5_write_access_error	R/W	0h	Mask Error from DSS_TPTC_C5 to aggregated Error DSS_TPCC_C_ERRAGG 1 : Error is Masked 0 : Error is Unmasked
21	tptc_c4_write_access_error	R/W	0h	Mask Error from DSS_TPTC_C4 to aggregated Error DSS_TPCC_C_ERRAGG 1 : Error is Masked 0 : Error is Unmasked
20	tptc_c3_write_access_error	R/W	0h	Mask Error from DSS_TPTC_C3 to aggregated Error DSS_TPCC_C_ERRAGG 1 : Error is Masked 0 : Error is Unmasked
19	tptc_c2_write_access_error	R/W	0h	Mask Error from DSS_TPTC_C2 to aggregated Error DSS_TPCC_C_ERRAGG 1 : Error is Masked 0 : Error is Unmasked
18	tptc_c1_write_access_error	R/W	0h	Mask Error from DSS_TPTC_C1 to aggregated Error DSS_TPCC_C_ERRAGG 1 : Error is Masked 0 : Error is Unmasked
17	tptc_c0_write_access_error	R/W	0h	Mask Error from DSS_TPTC_C0 to aggregated Error DSS_TPCC_C_ERRAGG 1 : Error is Masked 0 : Error is Unmasked
16	tpcc_c_write_access_error	R/W	0h	Mask Error from DSS_TPCC_C to aggregated Error DSS_TPCC_C_ERRAGG 1 : Error is Masked 0 : Error is Unmasked
15-9	RESERVED	R/W	X	
8	tpcc_c_parity_err	R/W	0h	Mask Error from DSS_TPCC_C to aggregated Error DSS_TPCC_C_ERRAGG 1 : Error is Masked 0 : Error is Unmasked
7	tptc_c5_err	R/W	0h	Mask Error from DSS_TPTC_C5 to aggregated Error DSS_TPCC_C_ERRAGG 1 : Error is Masked 0 : Error is Unmasked
6	tptc_c4_err	R/W	0h	Mask Error from DSS_TPTC_C4 to aggregated Error DSS_TPCC_C_ERRAGG 1 : Error is Masked 0 : Error is Unmasked
5	tptc_c3_err	R/W	0h	Mask Error from DSS_TPTC_C3 to aggregated Error DSS_TPCC_C_ERRAGG 1 : Error is Masked 0 : Error is Unmasked
4	tptc_c2_err	R/W	0h	Mask Error from DSS_TPTC_C2 to aggregated Error DSS_TPCC_C_ERRAGG 1 : Error is Masked 0 : Error is Unmasked
3	tptc_c1_err	R/W	0h	Mask Error from DSS_TPTC_C1 to aggregated Error DSS_TPCC_C_ERRAGG 1 : Error is Masked 0 : Error is Unmasked
2	tptc_c0_err	R/W	0h	Mask Error from DSS_TPTC_C0 to aggregated Error DSS_TPCC_C_ERRAGG 1 : Error is Masked 0 : Error is Unmasked
1	tpcc_c_mpint	R/W	0h	Mask Error from DSS_TPCC_C to aggregated Error DSS_TPCC_C_ERRAGG 1 : Error is Masked 0 : Error is Unmasked
0	tpcc_c_errint	R/W	0h	Mask Error from DSS_TPCC_C to aggregated Error DSS_TPCC_C_ERRAGG 1 : Error is Masked 0 : Error is Unmasked

6.2.6.16 DSS_TPCC_C_ERRAGG_STATUS Register (Offset = 4Ch) [reset = X]

DSS_TPCC_C_ERRAGG_STATUS is shown in Figure 6-536 and described in Table 6-542.

Copyright © 2025 Texas Instruments Incorporated

Return to the Summary Table.

Figure 6-536. DSS_TPCC_C_ERRAGG_STATUS Register

31	30	29	28	27	26	25	24
RESERVED	tptc_c5_read_access_error	tptc_c4_read_access_error	tptc_c3_read_access_error	tptc_c2_read_access_error	tptc_c1_read_access_error	tptc_c0_read_access_error	tpcc_c_read_access_error
R/W-X	R/W-0h	R/W-0h	R/W-0h	R/W-0h	R/W-0h	R/W-0h	R/W-0h
23	22	21	20	19	18	17	16
RESERVED	tptc_c5_write_access_error	tptc_c4_write_access_error	tptc_c3_write_access_error	tptc_c2_write_access_error	tptc_c1_write_access_error	tptc_c0_write_access_error	tpcc_c_write_access_error
R/W-X	R/W-0h	R/W-0h	R/W-0h	R/W-0h	R/W-0h	R/W-0h	R/W-0h
15	14	13	12	11	10	9	8
RESERVED							tpcc_c_parity_err
R/W-X							R/W-0h
7	6	5	4	3	2	1	0
tptc_c5_err	tptc_c4_err	tptc_c3_err	tptc_c2_err	tptc_c1_err	tptc_c0_err	tpcc_c_mpint	tpcc_c_errint
R/W-0h	R/W-0h	R/W-0h	R/W-0h	R/W-0h	R/W-0h	R/W-0h	R/W-0h

Table 6-542. DSS_TPCC_C_ERRAGG_STATUS Register Field Descriptions

Bit	Field	Type	Reset	Description
31	RESERVED	R/W	X	
30	tptc_c5_read_access_error	R/W	0h	Status of Error from DSS_TPTC_C5. Set only if Interupt is unmasked in DSS_TPCC_C_ERRAGG_MASK Wrie 0x1 to clear this Error.
29	tptc_c4_read_access_error	R/W	0h	Status of Error from DSS_TPTC_C4. Set only if Interupt is unmasked in DSS_TPCC_C_ERRAGG_MASK Wrie 0x1 to clear this Error.
28	tptc_c3_read_access_error	R/W	0h	Status of Error from DSS_TPTC_C3. Set only if Interupt is unmasked in DSS_TPCC_C_ERRAGG_MASK Wrie 0x1 to clear this Error.
27	tptc_c2_read_access_error	R/W	0h	Status of Error from DSS_TPTC_C2. Set only if Interupt is unmasked in DSS_TPCC_C_ERRAGG_MASK Wrie 0x1 to clear this Error.
26	tptc_c1_read_access_error	R/W	0h	Status of Error from DSS_TPTC_C1. Set only if Interupt is unmasked in DSS_TPCC_C_ERRAGG_MASK Wrie 0x1 to clear this Error.
25	tptc_c0_read_access_error	R/W	0h	Status of Error from DSS_TPTC_C0. Set only if Interupt is unmasked in DSS_TPCC_C_ERRAGG_MASK Wrie 0x1 to clear this Error.
24	tpcc_c_read_access_error	R/W	0h	Status of Error from DSS_TPCC_C. Set only if Interupt is unmasked in DSS_TPCC_C_ERRAGG_MASK Wrie 0x1 to clear this Error.
23	RESERVED	R/W	X	
22	tptc_c5_write_access_error	R/W	0h	Status of Error from DSS_TPTC_C5. Set only if Interupt is unmasked in DSS_TPCC_C_ERRAGG_MASK Wrie 0x1 to clear this Error.
21	tptc_c4_write_access_error	R/W	0h	Status of Error from DSS_TPTC_C4. Set only if Interupt is unmasked in DSS_TPCC_C_ERRAGG_MASK Wrie 0x1 to clear this Error.
20	tptc_c3_write_access_error	R/W	0h	Status of Error from DSS_TPTC_C3. Set only if Interupt is unmasked in DSS_TPCC_C_ERRAGG_MASK Wrie 0x1 to clear this Error.
19	tptc_c2_write_access_error	R/W	0h	Status of Error from DSS_TPTC_C2. Set only if Interupt is unmasked in DSS_TPCC_C_ERRAGG_MASK Wrie 0x1 to clear this Error.
18	tptc_c1_write_access_error	R/W	0h	Status of Error from DSS_TPTC_C1. Set only if Interupt is unmasked in DSS_TPCC_C_ERRAGG_MASK Wrie 0x1 to clear this Error.
17	tptc_c0_write_access_error	R/W	0h	Status of Error from DSS_TPTC_C0. Set only if Interupt is unmasked in DSS_TPCC_C_ERRAGG_MASK Wrie 0x1 to clear this Error.
16	tpcc_c_write_access_error	R/W	0h	Status of Error from DSS_TPCC_C. Set only if Interupt is unmasked in DSS_TPCC_C_ERRAGG_MASK Wrie 0x1 to clear this Error.
15-9	RESERVED	R/W	X	

Copyright © 2025 Texas Instruments Incorporated

Table 6-542. DSS_TPCC_C_ERRAGG_STATUS Register Field Descriptions (continued)

Bit	Field	Type	Reset	Description
8	tpcc_c_parity_err	R/W	0h	Status of Error from DSS_TPCC_C. Set only if Interupt is unmasked in DSS_TPCC_C_ERRAGG_MASK Wrie 0x1 to clear this Error.
7	tptc_c5_err	R/W	0h	Status of Error from DSS_TPTC_C5. Set only if Interupt is unmasked in DSS_TPCC_C_ERRAGG_MASK Wrie 0x1 to clear this Error.
6	tptc_c4_err	R/W	0h	Status of Error from DSS_TPTC_C4. Set only if Interupt is unmasked in DSS_TPCC_C_ERRAGG_MASK Wrie 0x1 to clear this Error.
5	tptc_c3_err	R/W	0h	Status of Error from DSS_TPTC_C3. Set only if Interupt is unmasked in DSS_TPCC_C_ERRAGG_MASK Wrie 0x1 to clear this Error.
4	tptc_c2_err	R/W	0h	Status of Error from DSS_TPTC_C2. Set only if Interupt is unmasked in DSS_TPCC_C_ERRAGG_MASK Wrie 0x1 to clear this Error.
3	tptc_c1_err	R/W	0h	Status of Error from DSS_TPTC_C1. Set only if Interupt is unmasked in DSS_TPCC_C_ERRAGG_MASK Wrie 0x1 to clear this Error.
2	tptc_c0_err	R/W	0h	Status of Error from DSS_TPTC_C0. Set only if Interupt is unmasked in DSS_TPCC_C_ERRAGG_MASK Wrie 0x1 to clear this Error.
1	tpcc_c_mpint	R/W	0h	Status of Error from DSS_TPCC_C. Set only if Interupt is unmasked in DSS_TPCC_C_ERRAGG_MASK Wrie 0x1 to clear this Error.
0	tpcc_c_errint	R/W	0h	Status of Error from DSS_TPCC_C. Set only if Interupt is unmasked in DSS_TPCC_C_ERRAGG_MASK Wrie 0x1 to clear this Error.

6.2.6.17 DSS_TPCC_C_ERRAGG_STATUS_RAW Register (Offset = 50h) [reset = X]

DSS_TPCC_C_ERRAGG_STATUS_RAW is shown in Figure 6-537 and described in Table 6-543.

Return to the Summary Table.

Figure 6-537. DSS_TPCC_C_ERRAGG_STATUS_RAW Register

31	30	29	28	27	26	25	24
RESERVED	tptc_c5_read_access_error	tptc_c4_read_access_error	tptc_c3_read_access_error	tptc_c2_read_access_error	tptc_c1_read_access_error	tptc_c0_read_access_error	tpcc_c_read_access_error
R/W-X	R/W-0h	R/W-0h	R/W-0h	R/W-0h	R/W-0h	R/W-0h	R/W-0h
23	22	21	20	19	18	17	16
RESERVED	tptc_c5_write_access_error	tptc_c4_write_access_error	tptc_c3_write_access_error	tptc_c2_write_access_error	tptc_c1_write_access_error	tptc_c0_write_access_error	tpcc_c_write_access_error
R/W-X	R/W-0h	R/W-0h	R/W-0h	R/W-0h	R/W-0h	R/W-0h	R/W-0h
15	14	13	12	11	10	9	8
RESERVED							tpcc_c_parity_err
R/W-X							R/W-0h
7	6	5	4	3	2	1	0
tptc_c5_err	tptc_c4_err	tptc_c3_err	tptc_c2_err	tptc_c1_err	tptc_c0_err	tpcc_c_mpint	tpcc_c_errint
R/W-0h	R/W-0h	R/W-0h	R/W-0h	R/W-0h	R/W-0h	R/W-0h	R/W-0h

Table 6-543. DSS_TPCC_C_ERRAGG_STATUS_RAW Register Field Descriptions

Bit	Field	Type	Reset	Description
31	RESERVED	R/W	X	
30	tptc_c5_read_access_error	R/W	0h	Raw Status of Error from DSS_TPTC_C5. Set irrespective if the Interupt is masked or unmasked in DSS_TPCC_C_ERRAGG_MASK
29	tptc_c4_read_access_error	R/W	0h	Raw Status of Error from DSS_TPTC_C4. Set irrespective if the Interupt is masked or unmasked in DSS_TPCC_C_ERRAGG_MASK
28	tptc_c3_read_access_error	R/W	0h	Raw Status of Error from DSS_TPTC_C3. Set irrespective if the Interupt is masked or unmasked in DSS_TPCC_C_ERRAGG_MASK

Copyright © 2025 Texas Instruments Incorporated

Table 6-543. DSS_TPCC_C_ERRAGG_STATUS_RAW Register Field Descriptions (continued)

Bit	Field	Type	Reset	Description
27	tptc_c2_read_access_error	R/W	0h	Raw Status of Error from DSS_TPTC_C2. Set irrespective if the Interupt is masked or unmasked in DSS_TPCC_C_ERRAGG_MASK
26	tptc_c1_read_access_error	R/W	0h	Raw Status of Error from DSS_TPTC_C1. Set irrespective if the Interupt is masked or unmasked in DSS_TPCC_C_ERRAGG_MASK
25	tptc_c0_read_access_error	R/W	0h	Raw Status of Error from DSS_TPTC_C0. Set irrespective if the Interupt is masked or unmasked in DSS_TPCC_C_ERRAGG_MASK
24	tpcc_c_read_access_error	R/W	0h	Raw Status of Error from DSS_TPCC_C. Set irrespective if the Interupt is masked or unmasked in DSS_TPCC_C_ERRAGG_MASK
23	RESERVED	R/W	X	
22	tptc_c5_write_access_error	R/W	0h	Raw Status of Error from DSS_TPTC_C5. Set irrespective if the Interupt is masked or unmasked in DSS_TPCC_C_ERRAGG_MASK
21	tptc_c4_write_access_error	R/W	0h	Raw Status of Error from DSS_TPTC_C4. Set irrespective if the Interupt is masked or unmasked in DSS_TPCC_C_ERRAGG_MASK
20	tptc_c3_write_access_error	R/W	0h	Raw Status of Error from DSS_TPTC_C3. Set irrespective if the Interupt is masked or unmasked in DSS_TPCC_C_ERRAGG_MASK
19	tptc_c2_write_access_error	R/W	0h	Raw Status of Error from DSS_TPTC_C2. Set irrespective if the Interupt is masked or unmasked in DSS_TPCC_C_ERRAGG_MASK
18	tptc_c1_write_access_error	R/W	0h	Raw Status of Error from DSS_TPTC_C1. Set irrespective if the Interupt is masked or unmasked in DSS_TPCC_C_ERRAGG_MASK
17	tptc_c0_write_access_error	R/W	0h	Raw Status of Error from DSS_TPTC_C0. Set irrespective if the Interupt is masked or unmasked in DSS_TPCC_C_ERRAGG_MASK
16	tpcc_c_write_access_error	R/W	0h	Raw Status of Error from DSS_TPCC_C. Set irrespective if the Interupt is masked or unmasked in DSS_TPCC_C_ERRAGG_MASK
15-9	RESERVED	R/W	X	
8	tpcc_c_parity_err	R/W	0h	Raw Status of Error from DSS_TPCC_C. Set irrespective if the Interupt is masked or unmasked in DSS_TPCC_C_ERRAGG_MASK
7	tptc_c5_err	R/W	0h	Raw Status of Error from DSS_TPTC_C5. Set irrespective if the Interupt is masked or unmasked in DSS_TPCC_C_ERRAGG_MASK
6	tptc_c4_err	R/W	0h	Raw Status of Error from DSS_TPTC_C4. Set irrespective if the Interupt is masked or unmasked in DSS_TPCC_C_ERRAGG_MASK
5	tptc_c3_err	R/W	0h	Raw Status of Error from DSS_TPTC_C3. Set irrespective if the Interupt is masked or unmasked in DSS_TPCC_C_ERRAGG_MASK
4	tptc_c2_err	R/W	0h	Raw Status of Error from DSS_TPTC_C2. Set irrespective if the Interupt is masked or unmasked in DSS_TPCC_C_ERRAGG_MASK
3	tptc_c1_err	R/W	0h	Raw Status of Error from DSS_TPTC_C1. Set irrespective if the Interupt is masked or unmasked in DSS_TPCC_C_ERRAGG_MASK
2	tptc_c0_err	R/W	0h	Raw Status of Error from DSS_TPTC_C0. Set irrespective if the Interupt is masked or unmasked in DSS_TPCC_C_ERRAGG_MASK
1	tpcc_c_mpint	R/W	0h	Raw Status of Error from DSS_TPCC_C0. Set irrespective if the Interupt is masked or unmasked in DSS_TPCC_C_ERRAGG_MASK
0	tpcc_c_errint	R/W	0h	Raw Status of Error from DSS_TPCC_C. Set irrespective if the Interupt is masked or unmasked in DSS_TPCC_C_ERRAGG_MASK

6.2.6.18 DSS_TPCC_C_INTAGG_MASK Register (Offset = 54h) [reset = X]

DSS_TPCC_C_INTAGG_MASK is shown in Figure 6-538 and described in Table 6-544.

Return to the Summary Table.

Figure 6-538. DSS_TPCC_C_INTAGG_MASK Register

31	30	29	28	27	26	25	24
RESERVED							
R/W-X							

Copyright © 2025 Texas Instruments Incorporated

Figure 6-538. DSS_TPCC_C_INTAGG_MASK Register (continued)

23	22	21	20	19	18	17	16
RESERVED		tptc_c5	tptc_c4	tptc_c3	tptc_c2	tptc_c1	tptc_c0
R/W-X		R/W-0h	R/W-0h	R/W-0h	R/W-0h	R/W-0h	R/W-0h
15	14	13	12	11	10	9	8
RESERVED							tpcc_c_int7
R/W-X							R/W-0h
7	6	5	4	3	2	1	0
tpcc_c_int6	tpcc_c_int5	tpcc_c_int4	tpcc_c_int3	tpcc_c_int2	tpcc_c_int1	tpcc_c_int0	tpcc_c_intg
R/W-0h	R/W-0h	R/W-0h	R/W-0h	R/W-0h	R/W-0h	R/W-0h	R/W-0h

Table 6-544. DSS_TPCC_C_INTAGG_MASK Register Field Descriptions

Bit	Field	Type	Reset	Description
31-22	RESERVED	R/W	X	
21	tptc_c5	R/W	0h	Mask Interrupt from DSS_TPTC_C5 to aggregated Interrupt DSS_TPCC_C_INTAGG 1 : Interrupt is Masked 0 : Interrupt is Unmasked
20	tptc_c4	R/W	0h	Mask Interrupt from DSS_TPTC_C4 to aggregated Interrupt DSS_TPCC_C_INTAGG 1 : Interrupt is Masked 0 : Interrupt is Unmasked
19	tptc_c3	R/W	0h	Mask Interrupt from DSS_TPTC_C3 to aggregated Interrupt DSS_TPCC_C_INTAGG 1 : Interrupt is Masked 0 : Interrupt is Unmasked
18	tptc_c2	R/W	0h	Mask Interrupt from DSS_TPTC_C2 to aggregated Interrupt DSS_TPCC_C_INTAGG 1 : Interrupt is Masked 0 : Interrupt is Unmasked
17	tptc_c1	R/W	0h	Mask Interrupt from DSS_TPTC_C1 to aggregated Interrupt DSS_TPCC_C_INTAGG 1 : Interrupt is Masked 0 : Interrupt is Unmasked
16	tptc_c0	R/W	0h	Mask Interrupt from DSS_TPTC_C0 to aggregated Interrupt DSS_TPCC_C_INTAGG 1 : Interrupt is Masked 0 : Interrupt is Unmasked
15-9	RESERVED	R/W	X	
8	tpcc_c_int7	R/W	0h	Mask Interrupt from DSS_TPCC_C to aggregated Interrupt DSS_TPCC_C_INTAGG 1 : Interrupt is Masked 0 : Interrupt is Unmasked
7	tpcc_c_int6	R/W	0h	Mask Interrupt from DSS_TPCC_C to aggregated Interrupt DSS_TPCC_C_INTAGG 1 : Interrupt is Masked 0 : Interrupt is Unmasked
6	tpcc_c_int5	R/W	0h	Mask Interrupt from DSS_TPCC_C to aggregated Interrupt DSS_TPCC_C_INTAGG 1 : Interrupt is Masked 0 : Interrupt is Unmasked
5	tpcc_c_int4	R/W	0h	Mask Interrupt from DSS_TPCC_C to aggregated Interrupt DSS_TPCC_C_INTAGG 1 : Interrupt is Masked 0 : Interrupt is Unmasked
4	tpcc_c_int3	R/W	0h	Mask Interrupt from DSS_TPCC_C to aggregated Interrupt DSS_TPCC_C_INTAGG 1 : Interrupt is Masked 0 : Interrupt is Unmasked
3	tpcc_c_int2	R/W	0h	Mask Interrupt from DSS_TPCC_C to aggregated Interrupt DSS_TPCC_C_INTAGG 1 : Interrupt is Masked 0 : Interrupt is Unmasked
2	tpcc_c_int1	R/W	0h	Mask Interrupt from DSS_TPCC_C to aggregated Interrupt DSS_TPCC_C_INTAGG 1 : Interrupt is Masked 0 : Interrupt is Unmasked

Copyright © 2025 Texas Instruments Incorporated

Table 6-544. DSS_TPCC_C_INTAGG_MASK Register Field Descriptions (continued)

Bit	Field	Type	Reset	Description
1	tpcc_c_int0	R/W	0h	Mask Interrupt from DSS_TPCC_C to aggregated Interrupt DSS_TPCC_C_INTAGG 1 : Interrupt is Masked 0 : Interrupt is Unmasked
0	tpcc_c_intg	R/W	0h	Mask Interrupt from DSS_TPCC_C to aggregated Interrupt DSS_TPCC_C_INTAGG 1 : Interrupt is Masked 0 : Interrupt is Unmasked

6.2.6.19 DSS_TPCC_C_INTAGG_STATUS Register (Offset = 58h) [reset = X]

DSS_TPCC_C_INTAGG_STATUS is shown in Figure 6-539 and described in Table 6-545.

Return to the Summary Table.

Figure 6-539. DSS_TPCC_C_INTAGG_STATUS Register

31	30	29	28	27	26	25	24
RESERVED							
R/W-X							
23	22	21	20	19	18	17	16
RESERVED		tptc_c5	tptc_c4	tptc_c3	tptc_c2	tptc_c1	tptc_c0
R/W-X		R/W-0h	R/W-0h	R/W-0h	R/W-0h	R/W-0h	R/W-0h
15	14	13	12	11	10	9	8
RESERVED							tpcc_c_int7
R/W-X							R/W-0h
7	6	5	4	3	2	1	0
tpcc_c_int6	tpcc_c_int5	tpcc_c_int4	tpcc_c_int3	tpcc_c_int2	tpcc_c_int1	tpcc_c_int0	tpcc_c_intg
R/W-0h	R/W-0h	R/W-0h	R/W-0h	R/W-0h	R/W-0h	R/W-0h	R/W-0h

Table 6-545. DSS_TPCC_C_INTAGG_STATUS Register Field Descriptions

Bit	Field	Type	Reset	Description
31-22	RESERVED	R/W	X	
21	tptc_c5	R/W	0h	Status of Interrupt from DSS_TPTC_C5. Set only if Interupt is unmasked in DSS_TPCC_C_INTAGG_MASK Wrie 0x1 to clear this interrupt.
20	tptc_c4	R/W	0h	Status of Interrupt from DSS_TPTC_C4. Set only if Interupt is unmasked in DSS_TPCC_C_INTAGG_MASK Wrie 0x1 to clear this interrupt.
19	tptc_c3	R/W	0h	Status of Interrupt from DSS_TPTC_C3. Set only if Interupt is unmasked in DSS_TPCC_C_INTAGG_MASK Wrie 0x1 to clear this interrupt.
18	tptc_c2	R/W	0h	Status of Interrupt from DSS_TPTC_C2. Set only if Interupt is unmasked in DSS_TPCC_C_INTAGG_MASK Wrie 0x1 to clear this interrupt.
17	tptc_c1	R/W	0h	Status of Interrupt from DSS_TPTC_C1. Set only if Interupt is unmasked in DSS_TPCC_C_INTAGG_MASK Wrie 0x1 to clear this interrupt.
16	tptc_c0	R/W	0h	Status of Interrupt from DSS_TPTC_C0. Set only if Interupt is unmasked in DSS_TPCC_C_INTAGG_MASK Wrie 0x1 to clear this interrupt.
15-9	RESERVED	R/W	X	

Copyright © 2025 Texas Instruments Incorporated

Table 6-545. DSS_TPCC_C_INTAGG_STATUS Register Field Descriptions (continued)

Bit	Field	Type	Reset	Description
8	tpcc_c_int7	R/W	0h	Status of Interrupt from DSS_TPCC_C. Set only if Interupt is unmasked in DSS_TPCC_C_INTAGG_MASK Wrie 0x1 to clear this interrupt.
7	tpcc_c_int6	R/W	0h	Status of Interrupt from DSS_TPCC_C. Set only if Interupt is unmasked in DSS_TPCC_C_INTAGG_MASK Wrie 0x1 to clear this interrupt.
6	tpcc_c_int5	R/W	0h	Status of Interrupt from DSS_TPCC_C. Set only if Interupt is unmasked in DSS_TPCC_C_INTAGG_MASK Wrie 0x1 to clear this interrupt.
5	tpcc_c_int4	R/W	0h	Status of Interrupt from DSS_TPCC_C. Set only if Interupt is unmasked in DSS_TPCC_C_INTAGG_MASK Wrie 0x1 to clear this interrupt.
4	tpcc_c_int3	R/W	0h	Status of Interrupt from DSS_TPCC_C. Set only if Interupt is unmasked in DSS_TPCC_C_INTAGG_MASK Wrie 0x1 to clear this interrupt.
3	tpcc_c_int2	R/W	0h	Status of Interrupt from DSS_TPCC_C. Set only if Interupt is unmasked in DSS_TPCC_C_INTAGG_MASK Wrie 0x1 to clear this interrupt.
2	tpcc_c_int1	R/W	0h	Status of Interrupt from DSS_TPCC_C. Set only if Interupt is unmasked in DSS_TPCC_C_INTAGG_MASK Wrie 0x1 to clear this interrupt.
1	tpcc_c_int0	R/W	0h	Status of Interrupt from DSS_TPCC_C. Set only if Interupt is unmasked in DSS_TPCC_C_INTAGG_MASK Wrie 0x1 to clear this interrupt.
0	tpcc_c_intg	R/W	0h	Status of Interrupt from DSS_TPCC_C. Set only if Interupt is unmasked in DSS_TPCC_C_INTAGG_MASK Wrie 0x1 to clear this interrupt.

6.2.6.20 DSS_TPCC_C_INTAGG_STATUS_RAW Register (Offset = 5Ch) [reset = X]

DSS_TPCC_C_INTAGG_STATUS_RAW is shown in Figure 6-540 and described in Table 6-546.

Return to the Summary Table.

Figure 6-540. DSS_TPCC_C_INTAGG_STATUS_RAW Register

31	30	29	28	27	26	25	24
RESERVED							
R/W-X							
23	22	21	20	19	18	17	16
RESERVED		tptc_c5	tptc_c4	tptc_c3	tptc_c2	tptc_c1	tptc_c0
R/W-X		R/W-0h	R/W-0h	R/W-0h	R/W-0h	R/W-0h	R/W-0h
15	14	13	12	11	10	9	8
RESERVED							tpcc_c_int7
R/W-X							R/W-0h
7	6	5	4	3	2	1	0
tpcc_c_int6	tpcc_c_int5	tpcc_c_int4	tpcc_c_int3	tpcc_c_int2	tpcc_c_int1	tpcc_c_int0	tpcc_c_intg
R/W-0h	R/W-0h	R/W-0h	R/W-0h	R/W-0h	R/W-0h	R/W-0h	R/W-0h

Table 6-546. DSS_TPCC_C_INTAGG_STATUS_RAW Register Field Descriptions

Bit	Field	Type	Reset	Description
31-22	RESERVED	R/W	X	

Copyright © 2025 Texas Instruments Incorporated

Table 6-546. DSS_TPCC_C_INTAGG_STATUS_RAW Register Field Descriptions (continued)

Bit	Field	Type	Reset	Description
21	tptc_c5	R/W	0h	Raw Status of Interrupt from DSS_TPTC_C5. Set irrespective if the Interupt is masked or unmasked in DSS_TPCC_C_INTAGG_MASK
20	tptc_c4	R/W	0h	Raw Status of Interrupt from DSS_TPTC_C4. Set irrespective if the Interupt is masked or unmasked in DSS_TPCC_C_INTAGG_MASK
19	tptc_c3	R/W	0h	Raw Status of Interrupt from DSS_TPTC_C3. Set irrespective if the Interupt is masked or unmasked in DSS_TPCC_C_INTAGG_MASK
18	tptc_c2	R/W	0h	Raw Status of Interrupt from DSS_TPTC_C2. Set irrespective if the Interupt is masked or unmasked in DSS_TPCC_C_INTAGG_MASK
17	tptc_c1	R/W	0h	Raw Status of Interrupt from DSS_TPTC_C1. Set irrespective if the Interupt is masked or unmasked in DSS_TPCC_C_INTAGG_MASK
16	tptc_c0	R/W	0h	Raw Status of Interrupt from DSS_TPTC_C0. Set irrespective if the Interupt is masked or unmasked in DSS_TPCC_C_INTAGG_MASK
15-9	RESERVED	R/W	X	
8	tpcc_c_int7	R/W	0h	Raw Status of Interrupt from DSS_TPCC_C. Set irrespective if the Interupt is masked or unmasked in DSS_TPCC_C_INTAGG_MASK
7	tpcc_c_int6	R/W	0h	Raw Status of Interrupt from DSS_TPCC_C. Set irrespective if the Interupt is masked or unmasked in DSS_TPCC_C_INTAGG_MASK
6	tpcc_c_int5	R/W	0h	Raw Status of Interrupt from DSS_TPCC_C. Set irrespective if the Interupt is masked or unmasked in DSS_TPCC_C_INTAGG_MASK
5	tpcc_c_int4	R/W	0h	Raw Status of Interrupt from DSS_TPCC_C. Set irrespective if the Interupt is masked or unmasked in DSS_TPCC_C_INTAGG_MASK
4	tpcc_c_int3	R/W	0h	Raw Status of Interrupt from DSS_TPCC_C. Set irrespective if the Interupt is masked or unmasked in DSS_TPCC_C_INTAGG_MASK
3	tpcc_c_int2	R/W	0h	Raw Status of Interrupt from DSS_TPCC_C. Set irrespective if the Interupt is masked or unmasked in DSS_TPCC_C_INTAGG_MASK
2	tpcc_c_int1	R/W	0h	Raw Status of Interrupt from DSS_TPCC_C. Set irrespective if the Interupt is masked or unmasked in DSS_TPCC_C_INTAGG_MASK
1	tpcc_c_int0	R/W	0h	Raw Status of Interrupt from DSS_TPCC_C. Set irrespective if the Interupt is masked or unmasked in DSS_TPCC_C_INTAGG_MASK
0	tpcc_c_intg	R/W	0h	Raw Status of Interrupt from DSS_TPCC_C. Set irrespective if the Interupt is masked or unmasked in DSS_TPCC_C_INTAGG_MASK

6.2.6.21 DSS_TPCC_MEMINIT_START Register (Offset = 60h) [reset = X]

DSS_TPCC_MEMINIT_START is shown in Figure 6-541 and described in Table 6-547.

Return to the Summary Table.

Figure 6-541. DSS_TPCC_MEMINIT_START Register

31	30	29	28	27	26	25	24
RESERVED							
R/W-X							
23	22	21	20	19	18	17	16
RESERVED							
R/W-X							
15	14	13	12	11	10	9	8
RESERVED							
R/W-X							
7	6	5	4	3	2	1	0
RESERVED					tpcc_c_meminit_start	tpcc_b_meminit_start	tpcc_a_meminit_start

Copyright © 2025 Texas Instruments Incorporated

Figure 6-541. DSS_TPCC_MEMINIT_START Register (continued)

R/W-X					R/W-0h	R/W-0h	R/W-0h	

Table 6-547. DSS_TPCC_MEMINIT_START Register Field Descriptions

Bit	Field	Type	Reset	Description
31-3	RESERVED	R/W	X	
2	tpcc_c_meminit_start	R/W	0h	Write pulse bit field: Start Memory intialization of TPCC A Param memory. Write 0x1 to start memory initilization. Write 0x0 after ensuring Memory intilization is in progress or has completed. Before starting new initilzation sequence ensure that there is no initilization sequence is in progress (ie TPCC_C_MEMINIT_STATUS should be 0x0) and clear any previouls complettion status(ie write 0x1 to clear TPCC_C_MEMINIT_DONE)
1	tpcc_b_meminit_start	R/W	0h	Write pulse bit field: Start Memory intialization of TPCC A Param memory. Write 0x1 to start memory initilization. Write 0x0 after ensuring Memory intilization is in progress or has completed. Before starting new initilzation sequence ensure that there is no initilization sequence is in progress (ie TPCC_B_MEMINIT_STATUS should be 0x0) and clear any previouls complettion status(ie write 0x1 to clear TPCC_B_MEMINIT_DONE)
0	tpcc_a_meminit_start	R/W	0h	Write pulse bit field: Start Memory intialization of TPCC A Param memory. Write 0x1 to start memory initilization. Write 0x0 after ensuring Memory intilization is in progress or has completed. Before starting new initilzation sequence ensure that there is no initilization sequence is in progress (ie TPCC_A_MEMINIT_STATUS should be 0x0) and clear any previouls complettion status(ie write 0x1 to clear TPCC_A_MEMINIT_DONE)

6.2.6.22 DSS_TPCC_MEMINIT_STATUS Register (Offset = 64h) [reset = X]

DSS_TPCC_MEMINIT_STATUS is shown in Figure 6-542 and described in Table 6-548.

Return to the Summary Table.

Figure 6-542. DSS_TPCC_MEMINIT_STATUS Register

31	30	29	28	27	26	25	24
RESERVED							
R-X							
23	22	21	20	19	18	17	16
RESERVED							
R-X							
15	14	13	12	11	10	9	8
RESERVED							
R-X							
7	6	5	4	3	2	1	0
RESERVED					tpcc_c_meminit_status	tpcc_b_meminit_status	tpcc_a_meminit_status
R-X					R-0h	R-0h	R-0h

Table 6-548. DSS_TPCC_MEMINIT_STATUS Register Field Descriptions

Bit	Field	Type	Reset	Description
31-3	RESERVED	R	X	
2	tpcc_c_meminit_status	R	0h	Status field. Read value 0x1 indicates previously triggered Memory intialization of TPCC A Param memory is in progress.

Copyright © 2025 Texas Instruments Incorporated

Table 6-548. DSS_TPCC_MEMINIT_STATUS Register Field Descriptions (continued)

Bit	Field	Type	Reset	Description
1	tpcc_b_meminit_status	R	0h	Status field. Read value 0x1 indicates previously triggered Memory intialization of TPCC A Param memory is in progress.
0	tpcc_a_meminit_status	R	0h	Status field. Read value 0x1 indicates previously triggered Memory intialization of TPCC A Param memory is in progress.

6.2.6.23 DSS_TPCC_MEMINIT_DONE Register (Offset = 68h) [reset = X]

DSS_TPCC_MEMINIT_DONE is shown in Figure 6-543 and described in Table 6-549.

Return to the Summary Table.

Figure 6-543. DSS_TPCC_MEMINIT_DONE Register

31	30	29	28	27	26	25	24
RESERVED							
R/W-X							
23	22	21	20	19	18	17	16
RESERVED							
R/W-X							
15	14	13	12	11	10	9	8
RESERVED							
R/W-X							
7	6	5	4	3	2	1	0
RESERVED					tpcc_c_meminit_done	tpcc_b_meminit_done	tpcc_a_meminit_done
R/W-X					R/W-0h	R/W-0h	R/W-0h

Table 6-549. DSS_TPCC_MEMINIT_DONE Register Field Descriptions

Bit	Field	Type	Reset	Description
31-3	RESERVED	R/W	X	
2	tpcc_c_meminit_done	R/W	0h	Status field. Read value 0x1 indicates previously triggered Memory intialization of TPCC A Param memory is complte. Write 0x1 to clear status. Refer TPCC Memory initialization sequnce in EDMA section for more details
1	tpcc_b_meminit_done	R/W	0h	Status field. Read value 0x1 indicates previously triggered Memory intialization of TPCC A Param memory is complte. Write 0x1 to clear status. Refer TPCC Memory initialization sequnce in EDMA section for more details
0	tpcc_a_meminit_done	R/W	0h	Status field. Read value 0x1 indicates previously triggered Memory intialization of TPCC A Param memory is complte. Write 0x1 to clear status. Refer TPCC Memory initialization sequnce in EDMA section for more details

6.2.6.24 DSS_DSP_L2RAM_PARITY_CTRL Register (Offset = 6Ch) [reset = X]

DSS_DSP_L2RAM_PARITY_CTRL is shown in Figure 6-544 and described in Table 6-550.

Return to the Summary Table.

Figure 6-544. DSS_DSP_L2RAM_PARITY_CTRL Register

31	30	29	28	27	26	25	24	23	22	21	20	19	18	17	16
RESERVED															

Copyright © 2025 Texas Instruments Incorporated

Figure 6-544. DSS_DSP_L2RAM_PARITY_CTRL Register (continued)

R/W-X															
15	14	13	12	11	10	9	8	7	6	5	4	3	2	1	0
err_clear								enable							
R/W-0h								R/W-0h							

Table 6-550. DSS_DSP_L2RAM_PARITY_CTRL Register Field Descriptions

Bit	Field	Type	Reset	Description
31-16	RESERVED	R/W	X	
15-8	err_clear	R/W	0h	Write to bit N to clear L2 Parity Error line N
7-0	enable	R/W	0h	Write to bit N to enable L2 Parity N

6.2.6.25 DSS_DSP_L2RAM_PARITY_ERR_STATUS_VB0 Register (Offset = 70h) [reset = X]

DSS_DSP_L2RAM_PARITY_ERR_STATUS_VB0 is shown in Figure 6-545 and described in Table 6-551.

Return to the Summary Table.

Figure 6-545. DSS_DSP_L2RAM_PARITY_ERR_STATUS_VB0 Register

31	30	29	28	27	26	25	24	23	22	21	20	19	18	17	16
RESERVED				addr1											
R-X				R-0h											
15	14	13	12	11	10	9	8	7	6	5	4	3	2	1	0
RESERVED				addr0											
R-X				R-0h											

Table 6-551. DSS_DSP_L2RAM_PARITY_ERR_STATUS_VB0 Register Field Descriptions

Bit	Field	Type	Reset	Description
31-28	RESERVED	R	X	
27-16	addr1	R	0h	Error address 1 for Virtual Bank 0
15-12	RESERVED	R	X	
11-0	addr0	R	0h	Error address 0 for Virtual Bank 0

6.2.6.26 DSS_DSP_L2RAM_PARITY_ERR_STATUS_VB1 Register (Offset = 74h) [reset = X]

DSS_DSP_L2RAM_PARITY_ERR_STATUS_VB1 is shown in Figure 6-546 and described in Table 6-552.

Return to the Summary Table.

Figure 6-546. DSS_DSP_L2RAM_PARITY_ERR_STATUS_VB1 Register

31	30	29	28	27	26	25	24	23	22	21	20	19	18	17	16
RESERVED				addr1											
R-X				R-0h											
15	14	13	12	11	10	9	8	7	6	5	4	3	2	1	0
RESERVED				addr0											
R-X				R-0h											

Table 6-552. DSS_DSP_L2RAM_PARITY_ERR_STATUS_VB1 Register Field Descriptions

Bit	Field	Type	Reset	Description
31-28	RESERVED	R	X	

Copyright © 2025 Texas Instruments Incorporated

Table 6-552. DSS_DSP_L2RAM_PARITY_ERR_STATUS_VB1 Register Field Descriptions (continued)

Bit	Field	Type	Reset	Description
27-16	addr1	R	0h	Error address 1 for Virtual Bank 1
15-12	RESERVED	R	X	
11-0	addr0	R	0h	Error address 0 for Virtual Bank 1

6.2.6.27 DSS_DSP_L2RAM_PARITY_ERR_STATUS_VB2 Register (Offset = 78h) [reset = X]

DSS_DSP_L2RAM_PARITY_ERR_STATUS_VB2 is shown in Figure 6-547 and described in Table 6-553.

Return to the Summary Table.

Figure 6-547. DSS_DSP_L2RAM_PARITY_ERR_STATUS_VB2 Register

31	30	29	28	27	26	25	24	23	22	21	20	19	18	17	16
RESERVED				addr1											
R-X				R-0h											
15	14	13	12	11	10	9	8	7	6	5	4	3	2	1	0
RESERVED				addr0											
R-X				R-0h											

Table 6-553. DSS_DSP_L2RAM_PARITY_ERR_STATUS_VB2 Register Field Descriptions

Bit	Field	Type	Reset	Description
31-28	RESERVED	R	X	
27-16	addr1	R	0h	Error address 1 for Virtual Bank 2
15-12	RESERVED	R	X	
11-0	addr0	R	0h	Error address 0 for Virtual Bank 2

6.2.6.28 DSS_DSP_L2RAM_PARITY_ERR_STATUS_VB3 Register (Offset = 7Ch) [reset = X]

DSS_DSP_L2RAM_PARITY_ERR_STATUS_VB3 is shown in Figure 6-548 and described in Table 6-554.

Return to the Summary Table.

Figure 6-548. DSS_DSP_L2RAM_PARITY_ERR_STATUS_VB3 Register

31	30	29	28	27	26	25	24	23	22	21	20	19	18	17	16
RESERVED				addr1											
R-X				R-0h											
15	14	13	12	11	10	9	8	7	6	5	4	3	2	1	0
RESERVED				addr0											
R-X				R-0h											

Table 6-554. DSS_DSP_L2RAM_PARITY_ERR_STATUS_VB3 Register Field Descriptions

Bit	Field	Type	Reset	Description
31-28	RESERVED	R	X	
27-16	addr1	R	0h	Error address 1 for Virtual Bank 3
15-12	RESERVED	R	X	
11-0	addr0	R	0h	Error address 0 for Virtual Bank 3

Copyright © 2025 Texas Instruments Incorporated

6.2.6.29 DSS_DSP_L2RAM_MEMINIT_START Register (Offset = 80h) [reset = X]

DSS_DSP_L2RAM_MEMINIT_START is shown in Figure 6-549 and described in Table 6-555.

Return to the Summary Table.

Figure 6-549. DSS_DSP_L2RAM_MEMINIT_START Register

31	30	29	28	27	26	25	24
RESERVED							
R/W-X							
23	22	21	20	19	18	17	16
RESERVED							
R/W-X							
15	14	13	12	11	10	9	8
RESERVED							
R/W-X							
7	6	5	4	3	2	1	0
vb31	vb30	vb21	vb20	vb11	vb10	vb01	vb00
R/W-0h	R/W-0h	R/W-0h	R/W-0h	R/W-0h	R/W-0h	R/W-0h	R/W-0h

Table 6-555. DSS_DSP_L2RAM_MEMINIT_START Register Field Descriptions

Bit	Field	Type	Reset	Description
31-8	RESERVED	R/W	X	
7	vb31	R/W	0h	Write pulse bit field: Start Memory intialization of DSP L2 memory. Write 0x1 to start memory initilization. Write 0x0 after ensuring Memory intilization is in progress or has completed. Before starting new initilzation sequence ensure that there is no initilization sequence is in progress (ie DSS_DSP_L2RAM_MEMINIT_STATUS should be 0x0) and clear any previouls complettion status(ie write 0x1 to clear DSS_DSP_L2RAM_MEMINIT_DONE)
6	vb30	R/W	0h	Write pulse bit field: Start Memory intialization of DSP L2 memory. Write 0x1 to start memory initilization. Write 0x0 after ensuring Memory intilization is in progress or has completed. Before starting new initilzation sequence ensure that there is no initilization sequence is in progress (ie DSS_DSP_L2RAM_MEMINIT_STATUS should be 0x0) and clear any previouls complettion status(ie write 0x1 to clear DSS_DSP_L2RAM_MEMINIT_DONE)
5	vb21	R/W	0h	Write pulse bit field: Start Memory intialization of DSP L2 memory. Write 0x1 to start memory initilization. Write 0x0 after ensuring Memory intilization is in progress or has completed. Before starting new initilzation sequence ensure that there is no initilization sequence is in progress (ie DSS_DSP_L2RAM_MEMINIT_STATUS should be 0x0) and clear any previouls complettion status(ie write 0x1 to clear DSS_DSP_L2RAM_MEMINIT_DONE)
4	vb20	R/W	0h	Write pulse bit field: Start Memory intialization of DSP L2 memory. Write 0x1 to start memory initilization. Write 0x0 after ensuring Memory intilization is in progress or has completed. Before starting new initilzation sequence ensure that there is no initilization sequence is in progress (ie DSS_DSP_L2RAM_MEMINIT_STATUS should be 0x0) and clear any previouls complettion status(ie write 0x1 to clear DSS_DSP_L2RAM_MEMINIT_DONE)
3	vb11	R/W	0h	Write pulse bit field: Start Memory intialization of DSP L2 memory. Write 0x1 to start memory initilization. Write 0x0 after ensuring Memory intilization is in progress or has completed. Before starting new initilzation sequence ensure that there is no initilization sequence is in progress (ie DSS_DSP_L2RAM_MEMINIT_STATUS should be 0x0) and clear any previouls complettion status(ie write 0x1 to clear DSS_DSP_L2RAM_MEMINIT_DONE)

Copyright © 2025 Texas Instruments Incorporated

Table 6-555. DSS_DSP_L2RAM_MEMINIT_START Register Field Descriptions (continued)

Bit	Field	Type	Reset	Description
2	vb10	R/W	0h	Write pulse bit field: Start Memory intialization of DSP L2 memory. Write 0x1 to start memory initilization. Write 0x0 after ensuring Memory intilization is in progress or has completed. Before starting new initilzation sequence ensure that there is no initilization sequence is in progress (ie DSS_DSP_L2RAM_MEMINIT_STATUS should be 0x0) and clear any previouls complettion status(ie write 0x1 to clear DSS_DSP_L2RAM_MEMINIT_DONE)
1	vb01	R/W	0h	Write pulse bit field: Start Memory intialization of DSP L2 memory. Write 0x1 to start memory initilization. Write 0x0 after ensuring Memory intilization is in progress or has completed. Before starting new initilzation sequence ensure that there is no initilization sequence is in progress (ie DSS_DSP_L2RAM_MEMINIT_STATUS should be 0x0) and clear any previouls complettion status(ie write 0x1 to clear DSS_DSP_L2RAM_MEMINIT_DONE)
0	vb00	R/W	0h	Write pulse bit field: Start Memory intialization of DSP L2 memory. Write 0x1 to start memory initilization. Write 0x0 after ensuring Memory intilization is in progress or has completed. Before starting new initilzation sequence ensure that there is no initilization sequence is in progress (ie DSS_DSP_L2RAM_MEMINIT_STATUS should be 0x0) and clear any previouls complettion status(ie write 0x1 to clear DSS_DSP_L2RAM_MEMINIT_DONE)

6.2.6.30 DSS_DSP_L2RAM_MEMINIT_STATUS Register (Offset = 84h) [reset = X]

DSS_DSP_L2RAM_MEMINIT_STATUS is shown in Figure 6-550 and described in Table 6-556.

Return to the Summary Table.

Figure 6-550. DSS_DSP_L2RAM_MEMINIT_STATUS Register

31	30	29	28	27	26	25	24
RESERVED							
R-X							
23	22	21	20	19	18	17	16
RESERVED							
R-X							
15	14	13	12	11	10	9	8
RESERVED							
R-X							
7	6	5	4	3	2	1	0
vb31	vb30	vb21	vb20	vb11	vb10	vb01	vb00
R-0h	R-0h	R-0h	R-0h	R-0h	R-0h	R-0h	R-0h

Table 6-556. DSS_DSP_L2RAM_MEMINIT_STATUS Register Field Descriptions

Bit	Field	Type	Reset	Description
31-8	RESERVED	R	X	
7	vb31	R	0h	Status field. Read value 0x1 indicates previously triggered Memory intialization of DSP L2 memory is in progress.
6	vb30	R	0h	Status field. Read value 0x1 indicates previously triggered Memory intialization of DSP L2 memory is in progress.
5	vb21	R	0h	Status field. Read value 0x1 indicates previously triggered Memory intialization of DSP L2 memory is in progress.
4	vb20	R	0h	Status field. Read value 0x1 indicates previously triggered Memory intialization of DSP L2 memory is in progress.

Copyright © 2025 Texas Instruments Incorporated

Table 6-556. DSS_DSP_L2RAM_MEMINIT_STATUS Register Field Descriptions (continued)

Bit	Field	Type	Reset	Description
3	vb11	R	0h	Status field. Read value 0x1 indicates previously triggered Memory intialization of DSP L2 memory is in progress.
2	vb10	R	0h	Status field. Read value 0x1 indicates previously triggered Memory intialization of DSP L2 memory is in progress.
1	vb01	R	0h	Status field. Read value 0x1 indicates previously triggered Memory intialization of DSP L2 memory is in progress.
0	vb00	R	0h	Status field. Read value 0x1 indicates previously triggered Memory intialization of DSP L2 memory is in progress.

6.2.6.31 DSS_DSP_L2RAM_MEMINIT_DONE Register (Offset = 88h) [reset = X]

DSS_DSP_L2RAM_MEMINIT_DONE is shown in Figure 6-551 and described in Table 6-557.

Return to the Summary Table.

Figure 6-551. DSS_DSP_L2RAM_MEMINIT_DONE Register

31	30	29	28	27	26	25	24
RESERVED							
R/W-X							
23	22	21	20	19	18	17	16
RESERVED							
R/W-X							
15	14	13	12	11	10	9	8
RESERVED							
R/W-X							
7	6	5	4	3	2	1	0
vb31	vb30	vb21	vb20	vb11	vb10	vb01	vb00
R/W-0h	R/W-0h	R/W-0h	R/W-0h	R/W-0h	R/W-0h	R/W-0h	R/W-0h

Table 6-557. DSS_DSP_L2RAM_MEMINIT_DONE Register Field Descriptions

Bit	Field	Type	Reset	Description
31-8	RESERVED	R/W	X	
7	vb31	R/W	0h	Status field. Read value 0x1 indicates previously triggered Memory intialization of L2 Memory is complete. Write 0x1 to clear status.
6	vb30	R/W	0h	Status field. Read value 0x1 indicates previously triggered Memory intialization of L2 Memory is complete. Write 0x1 to clear status.
5	vb21	R/W	0h	Status field. Read value 0x1 indicates previously triggered Memory intialization of L2 Memory is complete. Write 0x1 to clear status.
4	vb20	R/W	0h	Status field. Read value 0x1 indicates previously triggered Memory intialization of L2 Memory is complete. Write 0x1 to clear status.
3	vb11	R/W	0h	Status field. Read value 0x1 indicates previously triggered Memory intialization of L2 Memory is complete. Write 0x1 to clear status.
2	vb10	R/W	0h	Status field. Read value 0x1 indicates previously triggered Memory intialization of L2 Memory is complete. Write 0x1 to clear status.
1	vb01	R/W	0h	Status field. Read value 0x1 indicates previously triggered Memory intialization of L2 Memory is complete. Write 0x1 to clear status.
0	vb00	R/W	0h	Status field. Read value 0x1 indicates previously triggered Memory intialization of L2 Memory is complete. Write 0x1 to clear status.

Copyright © 2025 Texas Instruments Incorporated

6.2.6.32 DSS_DSP_L2RAM_PARITY_MEMINIT_START Register (Offset = 8Ch) [reset = X]

DSS_DSP_L2RAM_PARITY_MEMINIT_START is shown in Figure 6-552 and described in Table 6-558.

Return to the Summary Table.

Figure 6-552. DSS_DSP_L2RAM_PARITY_MEMINIT_START Register

31	30	29	28	27	26	25	24
RESERVED							
R/W-X							
23	22	21	20	19	18	17	16
RESERVED							
R/W-X							
15	14	13	12	11	10	9	8
RESERVED							
R/W-X							
7	6	5	4	3	2	1	0
vb31	vb30	vb21	vb20	vb11	vb10	vb01	vb00
R/W-0h	R/W-0h	R/W-0h	R/W-0h	R/W-0h	R/W-0h	R/W-0h	R/W-0h

Table 6-558. DSS_DSP_L2RAM_PARITY_MEMINIT_START Register Field Descriptions

Bit	Field	Type	Reset	Description
31-8	RESERVED	R/W	X	
7	vb31	R/W	0h	Write pulse bit field: Start Memory intialization of DSP L2 Parity memory. Write 0x1 to start memory initilization. Write 0x0 after ensuring Memory intilization is in progress or has completed. Before starting new initilzation sequence ensure that there is no initilization sequence is in progress (ie DSS_DSP_L2RAM_MEMINIT_STATUS should be 0x0) and clear any previouls complettion status(ie write 0x1 to clear DSS_DSP_L2RAM_MEMINIT_DONE)
6	vb30	R/W	0h	Write pulse bit field: Start Memory intialization of DSP L2 Parity memory. Write 0x1 to start memory initilization. Write 0x0 after ensuring Memory intilization is in progress or has completed. Before starting new initilzation sequence ensure that there is no initilization sequence is in progress (ie DSS_DSP_L2RAM_MEMINIT_STATUS should be 0x0) and clear any previouls complettion status(ie write 0x1 to clear DSS_DSP_L2RAM_MEMINIT_DONE)
5	vb21	R/W	0h	Write pulse bit field: Start Memory intialization of DSP L2 Parity memory. Write 0x1 to start memory initilization. Write 0x0 after ensuring Memory intilization is in progress or has completed. Before starting new initilzation sequence ensure that there is no initilization sequence is in progress (ie DSS_DSP_L2RAM_MEMINIT_STATUS should be 0x0) and clear any previouls complettion status(ie write 0x1 to clear DSS_DSP_L2RAM_MEMINIT_DONE)
4	vb20	R/W	0h	Write pulse bit field: Start Memory intialization of DSP L2 Parity memory. Write 0x1 to start memory initilization. Write 0x0 after ensuring Memory intilization is in progress or has completed. Before starting new initilzation sequence ensure that there is no initilization sequence is in progress (ie DSS_DSP_L2RAM_MEMINIT_STATUS should be 0x0) and clear any previouls complettion status(ie write 0x1 to clear DSS_DSP_L2RAM_MEMINIT_DONE)
3	vb11	R/W	0h	Write pulse bit field: Start Memory intialization of DSP L2 Parity memory. Write 0x1 to start memory initilization. Write 0x0 after ensuring Memory intilization is in progress or has completed. Before starting new initilzation sequence ensure that there is no initilization sequence is in progress (ie DSS_DSP_L2RAM_MEMINIT_STATUS should be 0x0) and clear any previouls complettion status(ie write 0x1 to clear DSS_DSP_L2RAM_MEMINIT_DONE)

Copyright © 2025 Texas Instruments Incorporated

Table 6-558. DSS_DSP_L2RAM_PARITY_MEMINIT_START Register Field Descriptions (continued)

Bit	Field	Type	Reset	Description
2	vb10	R/W	0h	Write pulse bit field: Start Memory intialization of DSP L2 Parity memory. Write 0x1 to start memory initilization. Write 0x0 after ensuring Memory intilization is in progress or has completed. Before starting new initilzation sequence ensure that there is no initilization sequence is in progress (ie DSS_DSP_L2RAM_MEMINIT_STATUS should be 0x0) and clear any previouls complettion status(ie write 0x1 to clear DSS_DSP_L2RAM_MEMINIT_DONE)
1	vb01	R/W	0h	Write pulse bit field: Start Memory intialization of DSP L2 Parity memory. Write 0x1 to start memory initilization. Write 0x0 after ensuring Memory intilization is in progress or has completed. Before starting new initilzation sequence ensure that there is no initilization sequence is in progress (ie DSS_DSP_L2RAM_MEMINIT_STATUS should be 0x0) and clear any previouls complettion status(ie write 0x1 to clear DSS_DSP_L2RAM_MEMINIT_DONE)
0	vb00	R/W	0h	Write pulse bit field: Start Memory intialization of DSP L2 Parity memory. Write 0x1 to start memory initilization. Write 0x0 after ensuring Memory intilization is in progress or has completed. Before starting new initilzation sequence ensure that there is no initilization sequence is in progress (ie DSS_DSP_L2RAM_MEMINIT_STATUS should be 0x0) and clear any previouls complettion status(ie write 0x1 to clear DSS_DSP_L2RAM_MEMINIT_DONE)

6.2.6.33 DSS_DSP_L2RAM_PARITY_MEMINIT_STATUS Register (Offset = 90h) [reset = X]

DSS_DSP_L2RAM_PARITY_MEMINIT_STATUS is shown in Figure 6-553 and described in Table 6-559.

Return to the Summary Table.

Figure 6-553. DSS_DSP_L2RAM_PARITY_MEMINIT_STATUS Register

31	30	29	28	27	26	25	24
RESERVED							
R-X							
23	22	21	20	19	18	17	16
RESERVED							
R-X							
15	14	13	12	11	10	9	8
RESERVED							
R-X							
7	6	5	4	3	2	1	0
vb31	vb30	vb21	vb20	vb11	vb10	vb01	vb00
R-0h	R-0h	R-0h	R-0h	R-0h	R-0h	R-0h	R-0h

Table 6-559. DSS_DSP_L2RAM_PARITY_MEMINIT_STATUS Register Field Descriptions

Bit	Field	Type	Reset	Description
31-8	RESERVED	R	X	
7	vb31	R	0h	Status field. Read value 0x1 indicates previously triggered Memory intialization of DSP L2 Parity memory is in progress.
6	vb30	R	0h	Status field. Read value 0x1 indicates previously triggered Memory intialization of DSP L2 Parity memory is in progress.
5	vb21	R	0h	Status field. Read value 0x1 indicates previously triggered Memory intialization of DSP L2 Parity memory is in progress.
4	vb20	R	0h	Status field. Read value 0x1 indicates previously triggered Memory intialization of DSP L2 Parity memory is in progress.

Copyright © 2025 Texas Instruments Incorporated

Table 6-559. DSS_DSP_L2RAM_PARITY_MEMINIT_STATUS Register Field Descriptions (continued)

Bit	Field	Type	Reset	Description
3	vb11	R	0h	Status field. Read value 0x1 indicates previously triggered Memory intialization of DSP L2 Parity memory is in progress.
2	vb10	R	0h	Status field. Read value 0x1 indicates previously triggered Memory intialization of DSP L2 Parity memory is in progress.
1	vb01	R	0h	Status field. Read value 0x1 indicates previously triggered Memory intialization of DSP L2 Parity memory is in progress.
0	vb00	R	0h	Status field. Read value 0x1 indicates previously triggered Memory intialization of DSP L2 Parity memory is in progress.

6.2.6.34 DSS_DSP_L2RAM_PARITY_MEMINIT_DONE Register (Offset = 94h) [reset = X]

DSS_DSP_L2RAM_PARITY_MEMINIT_DONE is shown in Figure 6-554 and described in Table 6-560.

Return to the Summary Table.

Figure 6-554. DSS_DSP_L2RAM_PARITY_MEMINIT_DONE Register

31	30	29	28	27	26	25	24
RESERVED							
R/W-X							
23	22	21	20	19	18	17	16
RESERVED							
R/W-X							
15	14	13	12	11	10	9	8
RESERVED							
R/W-X							
7	6	5	4	3	2	1	0
vb31	vb30	vb21	vb20	vb11	vb10	vb01	vb00
R/W-0h	R/W-0h	R/W-0h	R/W-0h	R/W-0h	R/W-0h	R/W-0h	R/W-0h

Table 6-560. DSS_DSP_L2RAM_PARITY_MEMINIT_DONE Register Field Descriptions

Bit	Field	Type	Reset	Description
31-8	RESERVED	R/W	X	
7	vb31	R/W	0h	Status field. Read value 0x1 indicates previously triggered Memory intialization of DSP L2 Parity memory is complete. Write 0x1 to clear status.
6	vb30	R/W	0h	Status field. Read value 0x1 indicates previously triggered Memory intialization of DSP L2 Parity memory is complete. Write 0x1 to clear status.
5	vb21	R/W	0h	Status field. Read value 0x1 indicates previously triggered Memory intialization of DSP L2 Parity memory is complete. Write 0x1 to clear status.
4	vb20	R/W	0h	Status field. Read value 0x1 indicates previously triggered Memory intialization of DSP L2 Parity memory is complete. Write 0x1 to clear status.
3	vb11	R/W	0h	Status field. Read value 0x1 indicates previously triggered Memory intialization of DSP L2 Parity memory is complete. Write 0x1 to clear status.
2	vb10	R/W	0h	Status field. Read value 0x1 indicates previously triggered Memory intialization of DSP L2 Parity memory is complete. Write 0x1 to clear status.

Copyright © 2025 Texas Instruments Incorporated

Table 6-560. DSS_DSP_L2RAM_PARITY_MEMINIT_DONE Register Field Descriptions (continued)

Bit	Field	Type	Reset	Description
1	vb01	R/W	0h	Status field. Read value 0x1 indicates previously triggered Memory intialization of DSP L2 Parity memory is complete. Write 0x1 to clear status.
0	vb00	R/W	0h	Status field. Read value 0x1 indicates previously triggered Memory intialization of DSP L2 Parity memory is complete. Write 0x1 to clear status.

6.2.6.35 DSS_L3RAM_MEMINIT_START Register (Offset = 98h) [reset = X]

DSS_L3RAM_MEMINIT_START is shown in Figure 6-555 and described in Table 6-561.

Return to the Summary Table.

Figure 6-555. DSS_L3RAM_MEMINIT_START Register

31	30	29	28	27	26	25	24
RESERVED							
R/W-X							
23	22	21	20	19	18	17	16
RESERVED							
R/W-X							
15	14	13	12	11	10	9	8
RESERVED							
R/W-X							
7	6	5	4	3	2	1	0
RESERVED				l3ram3_meminit_start	l3ram2_meminit_start	l3ram1_meminit_start	l3ram0_meminit_start
R/W-X				R/W-0h	R/W-0h	R/W-0h	R/W-0h

Table 6-561. DSS_L3RAM_MEMINIT_START Register Field Descriptions

Bit	Field	Type	Reset	Description
31-4	RESERVED	R/W	X	
3	l3ram3_meminit_start	R/W	0h	Start Memory intialization of TPCC A Param memory. Write 0x1 to start memory initilization. Write 0x0 after ensuring Memory intilization is in progress or has completed. Before starting new initilzation sequence ensure that there is no initilization sequence is in progress (ie L3RAM_MEMINIT_STATUS should be 0x0) and clear any previouls complettion status(ie write 0x1 to clear L3RAM_MEMINIT_DONE)
2	l3ram2_meminit_start	R/W	0h	Write pulse bit field: Start Memory intialization of TPCC A Param memory. Write 0x1 to start memory initilization. Write 0x0 after ensuring Memory intilization is in progress or has completed. Before starting new initilzation sequence ensure that there is no initilization sequence is in progress (ie L3RAM_MEMINIT_STATUS should be 0x0) and clear any previouls complettion status(ie write 0x1 to clear L3RAM_MEMINIT_DONE)
1	l3ram1_meminit_start	R/W	0h	Write pulse bit field: Start Memory intialization of TPCC A Param memory. Write 0x1 to start memory initilization. Write 0x0 after ensuring Memory intilization is in progress or has completed. Before starting new initilzation sequence ensure that there is no initilization sequence is in progress (ie L3RAM_MEMINIT_STATUS should be 0x0) and clear any previouls complettion status(ie write 0x1 to clear L3RAM_MEMINIT_DONE)

Copyright © 2025 Texas Instruments Incorporated

Table 6-561. DSS_L3RAM_MEMINIT_START Register Field Descriptions (continued)

Bit	Field	Type	Reset	Description
0	l3ram0_meminit_start	R/W	0h	Write pulse bit field: Start Memory intialization of TPCC A Param memory. Write 0x1 to start memory initilization. Write 0x0 after ensuring Memory intilization is in progress or has completed. Before starting new initilzation sequence ensure that there is no initilization sequence is in progress (ie L3RAM_MEMINIT_STATUS should be 0x0) and clear any previouls complettion status(ie write 0x1 to clear L3RAM_MEMINIT_DONE)

6.2.6.36 DSS_L3RAM_MEMINIT_STATUS Register (Offset = 9Ch) [reset = X]

DSS_L3RAM_MEMINIT_STATUS is shown in Figure 6-556 and described in Table 6-562.

Return to the Summary Table.

Figure 6-556. DSS_L3RAM_MEMINIT_STATUS Register

31	30	29	28	27	26	25	24
RESERVED							
R-X							
23	22	21	20	19	18	17	16
RESERVED							
R-X							
15	14	13	12	11	10	9	8
RESERVED							
R-X							
7	6	5	4	3	2	1	0
RESERVED				l3ram3_meminit_status	l3ram2_meminit_status	l3ram1_meminit_status	l3ram0_meminit_status
R-X				R-0h	R-0h	R-0h	R-0h

Table 6-562. DSS_L3RAM_MEMINIT_STATUS Register Field Descriptions

Bit	Field	Type	Reset	Description
31-4	RESERVED	R	X	
3	l3ram3_meminit_status	R	0h	Status field. Read value 0x1 indicates previously triggered Memory intialization of TPCC A Param memory is in progress.
2	l3ram2_meminit_status	R	0h	Status field. Read value 0x1 indicates previously triggered Memory intialization of TPCC A Param memory is in progress.
1	l3ram1_meminit_status	R	0h	Status field. Read value 0x1 indicates previously triggered Memory intialization of TPCC A Param memory is in progress.
0	l3ram0_meminit_status	R	0h	Status field. Read value 0x1 indicates previously triggered Memory intialization of TPCC A Param memory is in progress.

6.2.6.37 DSS_L3RAM_MEMINIT_DONE Register (Offset = A0h) [reset = X]

DSS_L3RAM_MEMINIT_DONE is shown in Figure 6-557 and described in Table 6-563.

Return to the Summary Table.

Figure 6-557. DSS_L3RAM_MEMINIT_DONE Register

31	30	29	28	27	26	25	24
RESERVED							
R/W-X							

Copyright © 2025 Texas Instruments Incorporated

Figure 6-557. DSS_L3RAM_MEMINIT_DONE Register (continued)

23	22	21	20	19	18	17	16
RESERVED							
R/W-X							
15	14	13	12	11	10	9	8
RESERVED							
R/W-X							
7	6	5	4	3	2	1	0
RESERVED				l3ram3_meminit_done	l3ram2_meminit_done	l3ram1_meminit_done	l3ram0_meminit_done
R/W-X				R/W-0h	R/W-0h	R/W-0h	R/W-0h

Table 6-563. DSS_L3RAM_MEMINIT_DONE Register Field Descriptions

Bit	Field	Type	Reset	Description
31-4	RESERVED	R/W	X	
3	l3ram3_meminit_done	R/W	0h	Status field. Read value 0x1 indicates previously triggered Memory intialization of TPCC A Param memory is complte. Write 0x1 to clear status. Refer TPCC Memory initialization sequnce in EDMA section for more details
2	l3ram2_meminit_done	R/W	0h	Status field. Read value 0x1 indicates previously triggered Memory intialization of TPCC A Param memory is complte. Write 0x1 to clear status. Refer TPCC Memory initialization sequnce in EDMA section for more details
1	l3ram1_meminit_done	R/W	0h	Status field. Read value 0x1 indicates previously triggered Memory intialization of TPCC A Param memory is complte. Write 0x1 to clear status. Refer TPCC Memory initialization sequnce in EDMA section for more details
0	l3ram0_meminit_done	R/W	0h	Status field. Read value 0x1 indicates previously triggered Memory intialization of TPCC A Param memory is complte. Write 0x1 to clear status. Refer TPCC Memory initialization sequnce in EDMA section for more details

6.2.6.38 DSS_MAILBOX_MEMINIT_START Register (Offset = B0h) [reset = X]

DSS_MAILBOX_MEMINIT_START is shown in Figure 6-558 and described in Table 6-564.

Return to the Summary Table.

Figure 6-558. DSS_MAILBOX_MEMINIT_START Register

31	30	29	28	27	26	25	24
RESERVED							
R/W-X							
23	22	21	20	19	18	17	16
RESERVED							
R/W-X							
15	14	13	12	11	10	9	8
RESERVED							
R/W-X							
7	6	5	4	3	2	1	0
RESERVED							meminit_start
R/W-X							R/W-0h

Copyright © 2025 Texas Instruments Incorporated

Figure 6-558. DSS_MAILBOX_MEMINIT_START Register (continued)

Table 6-564. DSS_MAILBOX_MEMINIT_START Register Field Descriptions

Bit	Field	Type	Reset	Description
31-1	RESERVED	R/W	X	
0	meminit_start	R/W	0h	Write pulse bit field: Start Memory intialization of TPCC A Param memory. Write 0x1 to start memory initilization. Write 0x0 after ensuring Memory intilization is in progress or has completed. Before starting new initilzation sequence ensure that there is no initilization sequence is in progress (ie L3RAM_MEMINIT_STATUS should be 0x0) and clear any previouls complettion status(ie write 0x1 to clear L3RAM_MEMINIT_DONE)

6.2.6.39 DSS_MAILBOX_MEMINIT_STATUS Register (Offset = B4h) [reset = X]

DSS_MAILBOX_MEMINIT_STATUS is shown in Figure 6-559 and described in Table 6-565.

Return to the Summary Table.

Figure 6-559. DSS_MAILBOX_MEMINIT_STATUS Register

31	30	29	28	27	26	25	24
RESERVED							
R-X							
23	22	21	20	19	18	17	16
RESERVED							
R-X							
15	14	13	12	11	10	9	8
RESERVED							
R-X							
7	6	5	4	3	2	1	0
RESERVED							meminit_status
R-X							R-0h

Table 6-565. DSS_MAILBOX_MEMINIT_STATUS Register Field Descriptions

Bit	Field	Type	Reset	Description
31-1	RESERVED	R	X	
0	meminit_status	R	0h	Status field. Read value 0x1 indicates previously triggered Memory intialization of TPCC A Param memory is in progress.

6.2.6.40 DSS_MAILBOX_MEMINIT_DONE Register (Offset = B8h) [reset = X]

DSS_MAILBOX_MEMINIT_DONE is shown in Figure 6-560 and described in Table 6-566.

Return to the Summary Table.

Figure 6-560. DSS_MAILBOX_MEMINIT_DONE Register

31	30	29	28	27	26	25	24
RESERVED							
R/W-X							
23	22	21	20	19	18	17	16
RESERVED							

Copyright © 2025 Texas Instruments Incorporated

Figure 6-560. DSS_MAILBOX_MEMINIT_DONE Register (continued)

R/W-X							
15	14	13	12	11	10	9	8
RESERVED							
R/W-X							
7	6	5	4	3	2	1	0
RESERVED							meminit_done
R/W-X							R/W-0h

Table 6-566. DSS_MAILBOX_MEMINIT_DONE Register Field Descriptions

Bit	Field	Type	Reset	Description
31-1	RESERVED	R/W	X	
0	meminit_done	R/W	0h	Status field. Read value 0x1 indicates previously triggered Memory intialization of TPCC A Param memory is complte. Write 0x1 to clear status. Refer TPCC Memory initialization sequnce in EDMA section for more details

6.2.6.41 DSS_TPCC_A_PARITY_CTRL Register (Offset = BCh) [reset = X]

DSS_TPCC_A_PARITY_CTRL is shown in Figure 6-561 and described in Table 6-567.

Return to the Summary Table.

Figure 6-561. DSS_TPCC_A_PARITY_CTRL Register

31	30	29	28	27	26	25	24
RESERVED							
R/W-X							
23	22	21	20	19	18	17	16
RESERVED							
R/W-X							
15	14	13	12	11	10	9	8
RESERVED							
R/W-X							
7	6	5	4	3	2	1	0
RESERVED					parity_err_clr	parity_testen	parity_en
R/W-X					R/W-0h	R/W-0h	R/W-0h

Table 6-567. DSS_TPCC_A_PARITY_CTRL Register Field Descriptions

Bit	Field	Type	Reset	Description
31-3	RESERVED	R/W	X	
2	parity_err_clr	R/W	0h	Write pulse bit field: Write 0x1 to clear the Parit Error status for TPCC
1	parity_testen	R/W	0h	Enable Parity Test for TPCC. Write 0x1 : Parity Test is enabled on PARAM memory
0	parity_en	R/W	0h	Enable Parity for TPCC. Write 0x1 : Parity is enabled on PARAM memory

Copyright © 2025 Texas Instruments Incorporated

6.2.6.42 DSS_TPCC_B_PARITY_CTRL Register (Offset = C0h) [reset = X]

DSS_TPCC_B_PARITY_CTRL is shown in Figure 6-562 and described in Table 6-568.

Return to the Summary Table.

Figure 6-562. DSS_TPCC_B_PARITY_CTRL Register

31	30	29	28	27	26	25	24
RESERVED							
R/W-X							
23	22	21	20	19	18	17	16
RESERVED							
R/W-X							
15	14	13	12	11	10	9	8
RESERVED							
R/W-X							
7	6	5	4	3	2	1	0
RESERVED					parity_err_clr	parity_testen	parity_en
R/W-X					R/W-0h	R/W-0h	R/W-0h

Table 6-568. DSS_TPCC_B_PARITY_CTRL Register Field Descriptions

Bit	Field	Type	Reset	Description
31-3	RESERVED	R/W	X	
2	parity_err_clr	R/W	0h	Write pulse bit field: Write 0x1 to clear the Parit Error status for TPCC
1	parity_testen	R/W	0h	Enable Parity Test for TPCC. Write 0x1 : Parity Test is enabled on PARAM memory
0	parity_en	R/W	0h	Enable Parity for TPCC. Write 0x1 : Parity is enabled on PARAM memory

6.2.6.43 DSS_TPCC_C_PARITY_CTRL Register (Offset = C4h) [reset = X]

DSS_TPCC_C_PARITY_CTRL is shown in Figure 6-563 and described in Table 6-569.

Return to the Summary Table.

Figure 6-563. DSS_TPCC_C_PARITY_CTRL Register

31	30	29	28	27	26	25	24
RESERVED							
R/W-X							
23	22	21	20	19	18	17	16
RESERVED							
R/W-X							
15	14	13	12	11	10	9	8
RESERVED							
R/W-X							
7	6	5	4	3	2	1	0
RESERVED					parity_err_clr	parity_testen	parity_en
R/W-X					R/W-0h	R/W-0h	R/W-0h

Copyright © 2025 Texas Instruments Incorporated

Table 6-569. DSS_TPCC_C_PARITY_CTRL Register Field Descriptions

Bit	Field	Type	Reset	Description
31-3	RESERVED	R/W	X	
2	parity_err_clr	R/W	0h	Write pulse bit field: Write 0x1 to clear the Parit Error status for TPCC
1	parity_testen	R/W	0h	Enable Parity Test for TPCC. Write 0x1 : Parity Test is enabled on PARAM memory
0	parity_en	R/W	0h	Enable Parity for TPCC. Write 0x1 : Parity is enabled on PARAM memory

6.2.6.44 DSS_TPCC_A_PARITY_STATUS Register (Offset = C8h) [reset = X]

DSS_TPCC_A_PARITY_STATUS is shown in Figure 6-564 and described in Table 6-570.

Return to the Summary Table.

Figure 6-564. DSS_TPCC_A_PARITY_STATUS Register

31	30	29	28	27	26	25	24	23	22	21	20	19	18	17	16
RESERVED															
R-X															
15	14	13	12	11	10	9	8	7	6	5	4	3	2	1	0
RESERVED								parity_addr							
R-X								R-0h							

Table 6-570. DSS_TPCC_A_PARITY_STATUS Register Field Descriptions

Bit	Field	Type	Reset	Description
31-8	RESERVED	R	X	
7-0	parity_addr	R	0h	TPCC Error Address at which Parity Error occurred

6.2.6.45 DSS_TPCC_B_PARITY_STATUS Register (Offset = CCh) [reset = X]

DSS_TPCC_B_PARITY_STATUS is shown in Figure 6-565 and described in Table 6-571.

Return to the Summary Table.

Figure 6-565. DSS_TPCC_B_PARITY_STATUS Register

31	30	29	28	27	26	25	24	23	22	21	20	19	18	17	16
RESERVED															
R-X															
15	14	13	12	11	10	9	8	7	6	5	4	3	2	1	0
RESERVED								parity_addr							
R-X								R-0h							

Table 6-571. DSS_TPCC_B_PARITY_STATUS Register Field Descriptions

Bit	Field	Type	Reset	Description
31-8	RESERVED	R	X	
7-0	parity_addr	R	0h	TPCC Error Address at which Parity Error occurred

Copyright © 2025 Texas Instruments Incorporated

6.2.6.46 DSS_TPCC_C_PARITY_STATUS Register (Offset = D0h) [reset = X]

DSS_TPCC_C_PARITY_STATUS is shown in Figure 6-566 and described in Table 6-572.

Return to the Summary Table.

Figure 6-566. DSS_TPCC_C_PARITY_STATUS Register

31	30	29	28	27	26	25	24	23	22	21	20	19	18	17	16
RESERVED															
R-X															
15	14	13	12	11	10	9	8	7	6	5	4	3	2	1	0
RESERVED								parity_addr							
R-X								R-0h							

Table 6-572. DSS_TPCC_C_PARITY_STATUS Register Field Descriptions

Bit	Field	Type	Reset	Description
31-9	RESERVED	R	X	
8-0	parity_addr	R	0h	TPCC Error Address at which Parity Error occurred

6.2.6.47 TPTC_DBS_CONFIG Register (Offset = D4h) [reset = X]

TPTC_DBS_CONFIG is shown in Figure 6-567 and described in Table 6-573.

Return to the Summary Table.

Figure 6-567. TPTC_DBS_CONFIG Register

31	30	29	28	27	26	25	24
RESERVED							
R/W-X							
23	22	21	20	19	18	17	16
RESERVED				tptc_c5		tptc_c4	
R/W-X				R/W-2h		R/W-2h	
15	14	13	12	11	10	9	8
tptc_c3		tptc_c2		tptc_c1		tptc_c0	
R/W-2h		R/W-2h		R/W-2h		R/W-2h	
7	6	5	4	3	2	1	0
tptc_b1		tptc_b0		tptc_a1		tptc_a0	
R/W-2h		R/W-2h		R/W-2h		R/W-2h	

Table 6-573. TPTC_DBS_CONFIG Register Field Descriptions

Bit	Field	Type	Reset	Description
31-20	RESERVED	R/W	X	
19-18	tptc_c5	R/W	2h	Max Burst size tieoff value for TPTC C5
17-16	tptc_c4	R/W	2h	Max Burst size tieoff value for TPTC C4
15-14	tptc_c3	R/W	2h	Max Burst size tieoff value for TPTC C3
13-12	tptc_c2	R/W	2h	Max Burst size tieoff value for TPTC C2
11-10	tptc_c1	R/W	2h	Max Burst size tieoff value for TPTC C1
9-8	tptc_c0	R/W	2h	Max Burst size tieoff value for TPTC C0
7-6	tptc_b1	R/W	2h	Max Burst size tieoff value for TPTC B0
5-4	tptc_b0	R/W	2h	Max Burst size tieoff value for TPTC B0

Copyright © 2025 Texas Instruments Incorporated

Table 6-573. TPTC_DBS_CONFIG Register Field Descriptions (continued)

Bit	Field	Type	Reset	Description
3-2	tptc_a1	R/W	2h	Max Burst size tieoff value for TPTC A1
1-0	tptc_a0	R/W	2h	Max Burst size tieoff value for TPTC A0

6.2.6.48 DSS_DSP_BOOTCFG Register (Offset = D8h) [reset = X]

DSS_DSP_BOOTCFG is shown in Figure 6-568 and described in Table 6-574.

Return to the Summary Table.

Figure 6-568. DSS_DSP_BOOTCFG Register

31	30	29	28	27	26	25	24
RESERVED						L1P_CACHE_MODE	L1D_CACHE_MODE
R/W-X						R/W-0h	R/W-0h
23	22	21	20	19	18	17	16
RESERVED		ISTP_RST_VAL					
R/W-X		R/W-2000h					
15	14	13	12	11	10	9	8
ISTP_RST_VAL							
R/W-2000h							
7	6	5	4	3	2	1	0
ISTP_RST_VAL							
R/W-2000h							

Table 6-574. DSS_DSP_BOOTCFG Register Field Descriptions

Bit	Field	Type	Reset	Description
31-26	RESERVED	R/W	X	
25	L1P_CACHE_MODE	R/W	0h	DSP Boot Configuration : L1P Cache Mode
24	L1D_CACHE_MODE	R/W	0h	DSP Boot Configuration : L1D Cache Mode
23-22	RESERVED	R/W	X	
21-0	ISTP_RST_VAL	R/W	2000h	DSP Boot Configuration : Reset Vector

6.2.6.49 DSS_DSP_NMI_GATE Register (Offset = DCh) [reset = X]

DSS_DSP_NMI_GATE is shown in Figure 6-569 and described in Table 6-575.

Return to the Summary Table.

Figure 6-569. DSS_DSP_NMI_GATE Register

31	30	29	28	27	26	25	24	23	22	21	20	19	18	17	16
RESERVED															
R/W-X															
15	14	13	12	11	10	9	8	7	6	5	4	3	2	1	0
RESERVED														gate	
R/W-X														R/W-0h	

Copyright © 2025 Texas Instruments Incorporated

Table 6-575. DSS_DSP_NMI_GATE Register Field Descriptions

Bit	Field	Type	Reset	Description
31-3	RESERVED	R/W	X	
2-0	gate	R/W	0h	Write 3'b111 to gate the Non Maskable Interrupt to the DSP. This is not expected to be used

6.2.6.50 DSS_PBIST_KEY_RESET Register (Offset = E0h) [reset = X]

DSS_PBIST_KEY_RESET is shown in Figure 6-570 and described in Table 6-576.

Return to the Summary Table.

Figure 6-570. DSS_PBIST_KEY_RESET Register

31	30	29	28	27	26	25	24
RESERVED							
R/W-X							
23	22	21	20	19	18	17	16
RESERVED							
R/W-X							
15	14	13	12	11	10	9	8
RESERVED							
R/W-X							
7	6	5	4	3	2	1	0
dss_pbist_st_reset				dss_pbist_st_key			
R/W-0h				R/W-0h			

Table 6-576. DSS_PBIST_KEY_RESET Register Field Descriptions

Bit	Field	Type	Reset	Description
31-8	RESERVED	R/W	X	
7-4	dss_pbist_st_reset	R/W	0h	DSS PBIST controller will be brought out of reset when value is 0xA
3-0	dss_pbist_st_key	R/W	0h	DSS PBIST Selftest Key. Valid value is 0x5

6.2.6.51 DSS_PBIST_REG0 Register (Offset = E4h) [reset = 0h]

DSS_PBIST_REG0 is shown in Figure 6-571 and described in Table 6-577.

Return to the Summary Table.

Figure 6-571. DSS_PBIST_REG0 Register

31	30	29	28	27	26	25	24	23	22	21	20	19	18	17	16	15	14	13	12	11	10	9	8	7	6	5	4	3	2	1	0
dss_pbist_reg0																															
R/W-0h																															

Table 6-577. DSS_PBIST_REG0 Register Field Descriptions

Bit	Field	Type	Reset	Description
31-0	dss_pbist_reg0	R/W	0h	DSP PBIST registers

6.2.6.52 DSS_PBIST_REG1 Register (Offset = E8h) [reset = 0h]

DSS_PBIST_REG1 is shown in Figure 6-572 and described in Table 6-578.

Copyright © 2025 Texas Instruments Incorporated

Return to the Summary Table.

Figure 6-572. DSS_PBIST_REG1 Register

31	30	29	28	27	26	25	24	23	22	21	20	19	18	17	16	15	14	13	12	11	10	9	8	7	6	5	4	3	2	1	0
dss_pbist_reg1																															
R/W-0h																															

Table 6-578. DSS_PBIST_REG1 Register Field Descriptions

Bit	Field	Type	Reset	Description
31-0	dss_pbist_reg1	R/W	0h	DSP PBIST registers

6.2.6.53 DSS_TPTC_BOUNDARY_CFG0 Register (Offset = ECh) [reset = X]

DSS_TPTC_BOUNDARY_CFG0 is shown in Figure 6-573 and described in Table 6-579.

Return to the Summary Table.

Figure 6-573. DSS_TPTC_BOUNDARY_CFG0 Register

31	30	29	28	27	26	25	24
RESERVED		tptc_b1_size					
R/W-X		R/W-13h					
23	22	21	20	19	18	17	16
RESERVED		tptc_b0_size					
R/W-X		R/W-13h					
15	14	13	12	11	10	9	8
RESERVED		tptc_a1_size					
R/W-X		R/W-13h					
7	6	5	4	3	2	1	0
RESERVED		tptc_a0_size					
R/W-X		R/W-13h					

Table 6-579. DSS_TPTC_BOUNDARY_CFG0 Register Field Descriptions

Bit	Field	Type	Reset	Description
31-30	RESERVED	R/W	X	
29-24	tptc_b1_size	R/W	13h	6 bit signal used for deciding the boundary crossing size for CID-RID-SID reordering of TPTC Example: writing 6'd19 decidies boundary to be 2^{19} i.e. 512 KB
23-22	RESERVED	R/W	X	
21-16	tptc_b0_size	R/W	13h	6 bit signal used for deciding the boundary crossing size for CID-RID-SID reordering of TPTC Example: writing 6'd19 decidies boundary to be 2^{19} i.e. 512 KB
15-14	RESERVED	R/W	X	
13-8	tptc_a1_size	R/W	13h	6 bit signal used for deciding the boundary crossing size for CID-RID-SID reordering of TPTC Example: writing 6'd19 decidies boundary to be 2^{19} i.e. 512 KB
7-6	RESERVED	R/W	X	
5-0	tptc_a0_size	R/W	13h	6 bit signal used for deciding the boundary crossing size for CID-RID-SID reordering of TPTC Example: writing 6'd19 decidies boundary to be 2^{19} i.e. 512 KB

Copyright © 2025 Texas Instruments Incorporated

6.2.6.54 DSS_TPTC_BOUNDARY_CFG1 Register (Offset = F0h) [reset = X]

DSS_TPTC_BOUNDARY_CFG1 is shown in Figure 6-574 and described in Table 6-580.

Return to the Summary Table.

Figure 6-574. DSS_TPTC_BOUNDARY_CFG1 Register

31	30	29	28	27	26	25	24
RESERVED		tptc_c3_size					
R/W-X		R/W-13h					
23	22	21	20	19	18	17	16
RESERVED		tptc_c2_size					
R/W-X		R/W-13h					
15	14	13	12	11	10	9	8
RESERVED		tptc_c1_size					
R/W-X		R/W-13h					
7	6	5	4	3	2	1	0
RESERVED		tptc_c0_size					
R/W-X		R/W-13h					

Table 6-580. DSS_TPTC_BOUNDARY_CFG1 Register Field Descriptions

Bit	Field	Type	Reset	Description
31-30	RESERVED	R/W	X	
29-24	tptc_c3_size	R/W	13h	6 bit signal used for deciding the boundary crossing size for CID-RID-SID reordering of TPTC Example: writing 6'd19 decidies boundary to be 2^{19} i.e. 512 KB
23-22	RESERVED	R/W	X	
21-16	tptc_c2_size	R/W	13h	6 bit signal used for deciding the boundary crossing size for CID-RID-SID reordering of TPTC Example: writing 6'd19 decidies boundary to be 2^{19} i.e. 512 KB
15-14	RESERVED	R/W	X	
13-8	tptc_c1_size	R/W	13h	6 bit signal used for deciding the boundary crossing size for CID-RID-SID reordering of TPTC Example: writing 6'd19 decidies boundary to be 2^{19} i.e. 512 KB
7-6	RESERVED	R/W	X	
5-0	tptc_c0_size	R/W	13h	6 bit signal used for deciding the boundary crossing size for CID-RID-SID reordering of TPTC Example: writing 6'd19 decidies boundary to be 2^{19} i.e. 512 KB

6.2.6.55 DSS_TPTC_BOUNDARY_CFG2 Register (Offset = F4h) [reset = X]

DSS_TPTC_BOUNDARY_CFG2 is shown in Figure 6-575 and described in Table 6-581.

Return to the Summary Table.

Figure 6-575. DSS_TPTC_BOUNDARY_CFG2 Register

31	30	29	28	27	26	25	24
RESERVED							
R/W-X							
23	22	21	20	19	18	17	16
RESERVED							
R/W-X							

Copyright © 2025 Texas Instruments Incorporated

Figure 6-575. DSS_TPTC_BOUNDARY_CFG2 Register (continued)

15	14	13	12	11	10	9	8
RESERVED				tptc_c5_size			
R/W-X				R/W-13h			
7	6	5	4	3	2	1	0
RESERVED				tptc_c4_size			
R/W-X				R/W-13h			

Table 6-581. DSS_TPTC_BOUNDARY_CFG2 Register Field Descriptions

Bit	Field	Type	Reset	Description
31-14	RESERVED	R/W	X	
13-8	tptc_c5_size	R/W	13h	6 bit signal used for deciding the boundary crossing size for CID-RID-SID reordering of TPTC Example: writing 6'd19 decidies boundary to be 2 ^{19} i.e. 512 KB
7-6	RESERVED	R/W	X	
5-0	tptc_c4_size	R/W	13h	6 bit signal used for deciding the boundary crossing size for CID-RID-SID reordering of TPTC Example: writing 6'd19 decidies boundary to be 2 ^{19} i.e. 512 KB

6.2.6.56 DSS_TPTC_XID_REORDER_CFG0 Register (Offset = F8h) [reset = X]

DSS_TPTC_XID_REORDER_CFG0 is shown in Figure 6-576 and described in Table 6-582.

Return to the Summary Table.

Figure 6-576. DSS_TPTC_XID_REORDER_CFG0 Register

31	30	29	28	27	26	25	24
RESERVED							tptc_b1_disable
R/W-X							R/W-0h
23	22	21	20	19	18	17	16
RESERVED							tptc_b0_disable
R/W-X							R/W-0h
15	14	13	12	11	10	9	8
RESERVED							tptc_a1_disable
R/W-X							R/W-0h
7	6	5	4	3	2	1	0
RESERVED							tptc_a0_disable
R/W-X							R/W-0h

Table 6-582. DSS_TPTC_XID_REORDER_CFG0 Register Field Descriptions

Bit	Field	Type	Reset	Description
31-25	RESERVED	R/W	X	
24	tptc_b1_disable	R/W	0h	Writing 1'b1 will disable the CID-RID-SID reodering feature for the TPTC instance
23-17	RESERVED	R/W	X	
16	tptc_b0_disable	R/W	0h	Writing 1'b1 will disable the CID-RID-SID reodering feature for the TPTC instance
15-9	RESERVED	R/W	X	
8	tptc_a1_disable	R/W	0h	Writing 1'b1 will disable the CID-RID-SID reodering feature for the TPTC instance

Copyright © 2025 Texas Instruments Incorporated

Table 6-582. DSS_TPTC_XID_REORDER_CFG0 Register Field Descriptions (continued)

Bit	Field	Type	Reset	Description
7-1	RESERVED	R/W	X	
0	tptc_a0_disable	R/W	0h	Writing 1'b1 will disable the CID-RID-SID reodering feature for the TPTC instance

6.2.6.57 DSS_TPTC_XID_REORDER_CFG1 Register (Offset = FCh) [reset = X]

DSS_TPTC_XID_REORDER_CFG1 is shown in Figure 6-577 and described in Table 6-583.

Return to the Summary Table.

Figure 6-577. DSS_TPTC_XID_REORDER_CFG1 Register

31	30	29	28	27	26	25	24
RESERVED							tptc_c3_disable
R/W-X							R/W-0h
23	22	21	20	19	18	17	16
RESERVED							tptc_c2_disable
R/W-X							R/W-0h
15	14	13	12	11	10	9	8
RESERVED							tptc_c1_disable
R/W-X							R/W-0h
7	6	5	4	3	2	1	0
RESERVED							tptc_c0_disable
R/W-X							R/W-0h

Table 6-583. DSS_TPTC_XID_REORDER_CFG1 Register Field Descriptions

Bit	Field	Type	Reset	Description
31-25	RESERVED	R/W	X	
24	tptc_c3_disable	R/W	0h	Writing 1'b1 will disable the CID-RID-SID reodering feature for the TPTC instance
23-17	RESERVED	R/W	X	
16	tptc_c2_disable	R/W	0h	Writing 1'b1 will disable the CID-RID-SID reodering feature for the TPTC instance
15-9	RESERVED	R/W	X	
8	tptc_c1_disable	R/W	0h	Writing 1'b1 will disable the CID-RID-SID reodering feature for the TPTC instance
7-1	RESERVED	R/W	X	
0	tptc_c0_disable	R/W	0h	Writing 1'b1 will disable the CID-RID-SID reodering feature for the TPTC instance

6.2.6.58 DSS_TPTC_XID_REORDER_CFG2 Register (Offset = 100h) [reset = X]

DSS_TPTC_XID_REORDER_CFG2 is shown in Figure 6-578 and described in Table 6-584.

Return to the Summary Table.

Figure 6-578. DSS_TPTC_XID_REORDER_CFG2 Register

31	30	29	28	27	26	25	24
RESERVED							
R/W-X							

Copyright © 2025 Texas Instruments Incorporated

Figure 6-578. DSS_TPTC_XID_REORDER_CFG2 Register (continued)

23	22	21	20	19	18	17	16
RESERVED							
R/W-X							
15	14	13	12	11	10	9	8
RESERVED							tptc_c5_disable
R/W-X							R/W-0h
7	6	5	4	3	2	1	0
RESERVED							tptc_c4_disable
R/W-X							R/W-0h

Table 6-584. DSS_TPTC_XID_REORDER_CFG2 Register Field Descriptions

Bit	Field	Type	Reset	Description
31-9	RESERVED	R/W	X	
8	tptc_c5_disable	R/W	0h	Writing 1'b1 will disable the CID-RID-SID reodering feature for the TPTC instance
7-1	RESERVED	R/W	X	
0	tptc_c4_disable	R/W	0h	Writing 1'b1 will disable the CID-RID-SID reodering feature for the TPTC instance

6.2.6.59 ESM_GATING0 Register (Offset = 108h) [reset = FFFFFFFFh]

ESM_GATING0 is shown in Figure 6-579 and described in Table 6-585.

Return to the Summary Table.

Figure 6-579. ESM_GATING0 Register

31	30	29	28	27	26	25	24	23	22	21	20	19	18	17	16	15	14	13	12	11	10	9	8	7	6	5	4	3	2	1	0
esm_gating																															
R/W-FFFFFFFFh																															

Table 6-585. ESM_GATING0 Register Field Descriptions

Bit	Field	Type	Reset	Description
31-0	esm_gating	R/W	FFFFFFFFh	Bit3:0 : writing '000' will ungate the DSS ESM Group2 Error 0 Bit7:4 : writing '000' will ungate the DSS ESM Group2 Error 1 Bit31:28 : writing '000' will ungate the DSS ESM Group2 Error 7

6.2.6.60 ESM_GATING1 Register (Offset = 10Ch) [reset = FFFFFFFFh]

ESM_GATING1 is shown in Figure 6-580 and described in Table 6-586.

Return to the Summary Table.

Figure 6-580. ESM_GATING1 Register

31	30	29	28	27	26	25	24	23	22	21	20	19	18	17	16	15	14	13	12	11	10	9	8	7	6	5	4	3	2	1	0
esm_gating																															
R/W-FFFFFFFFh																															

Copyright © 2025 Texas Instruments Incorporated

Table 6-586. ESM_GATING1 Register Field Descriptions

Bit	Field	Type	Reset	Description
31-0	esm_gating	R/W	FFFFFFFFh	Bit3:0 : writing '000' will ungate the DSS ESM Group2 Error 8 Bit7:4 : writing '000' will ungate the DSS ESM Group2 Error 9 Bit31:28 : writing '000' will ungate the DSS ESM Group2 Error 15

6.2.6.61 ESM_GATING2 Register (Offset = 110h) [reset = FFFFFFFFh]

ESM_GATING2 is shown in Figure 6-581 and described in Table 6-587.

Return to the Summary Table.

Figure 6-581. ESM_GATING2 Register

31	30	29	28	27	26	25	24	23	22	21	20	19	18	17	16	15	14	13	12	11	10	9	8	7	6	5	4	3	2	1	0
esm_gating																															
R/W-FFFFFFFFh																															

Table 6-587. ESM_GATING2 Register Field Descriptions

Bit	Field	Type	Reset	Description
31-0	esm_gating	R/W	FFFFFFFFh	Bit3:0 : writing '000' will ungate the DSS ESM Group2 Error 16 Bit7:4 : writing '000' will ungate the DSS ESM Group2 Error 17 Bit31:28 : writing '000' will ungate the DSS ESM Group2 Error 23

6.2.6.62 ESM_GATING3 Register (Offset = 114h) [reset = FFFFFFFFh]

ESM_GATING3 is shown in Figure 6-582 and described in Table 6-588.

Return to the Summary Table.

Figure 6-582. ESM_GATING3 Register

31	30	29	28	27	26	25	24	23	22	21	20	19	18	17	16	15	14	13	12	11	10	9	8	7	6	5	4	3	2	1	0
esm_gating																															
R/W-FFFFFFFFh																															

Table 6-588. ESM_GATING3 Register Field Descriptions

Bit	Field	Type	Reset	Description
31-0	esm_gating	R/W	FFFFFFFFh	Bit3:0 : writing '000' will ungate the DSS ESM Group2 Error 24 Bit7:4 : writing '000' will ungate the DSS ESM Group2 Error 25 Bit31:28 : writing '000' will ungate the DSS ESM Group2 Error 31

6.2.6.63 DSS_PERIPH_ERRAGG_MASK0 Register (Offset = 560h) [reset = X]

DSS_PERIPH_ERRAGG_MASK0 is shown in Figure 6-583 and described in Table 6-589.

Return to the Summary Table.

Figure 6-583. DSS_PERIPH_ERRAGG_MASK0 Register

31	30	29	28	27	26	25	24
RESERVED							
R/W-X							
23	22	21	20	19	18	17	16
RESERVED							
R/W-X							

Copyright © 2025 Texas Instruments Incorporated

Figure 6-583. DSS_PERIPH_ERRAGG_MASK0 Register (continued)

15	14	13	12	11	10	9	8
RESERVED				rcss_ctrl_wr	rcss_ctrl_rd	rcss_rcm_wr	rcss_rcm_rd
R/W-X				R/W-0h	R/W-0h	R/W-0h	R/W-0h
7	6	5	4	3	2	1	0
dss_hwa_cfg_wr	dss_hwa_cfg_rd	dss_cm4_ctrl_wr	dss_cm4_ctrl_rd	dss_ctrl_wr	dss_ctrl_rd	dss_rcm_wr	dss_rcm_rd
R/W-0h	R/W-0h	R/W-0h	R/W-0h	R/W-0h	R/W-0h	R/W-0h	R/W-0h

Table 6-589. DSS_PERIPH_ERRAGG_MASK0 Register Field Descriptions

Bit	Field	Type	Reset	Description
31-12	RESERVED	R/W	X	
11	rcss_ctrl_wr	R/W	0h	Mask the Write error from RCSS_CTRL space from generating an error DSS_PERIPH_ERRAGG to the Processor
10	rcss_ctrl_rd	R/W	0h	Mask the Read error from RCSS_CTRL space from generating an error DSS_PERIPH_ERRAGG to the Processor
9	rcss_rcm_wr	R/W	0h	Mask the Write error from RCSS_RCM space from generating an error DSS_PERIPH_ERRAGG to the Processor
8	rcss_rcm_rd	R/W	0h	Mask the Read error from RCSS_RCM space from generating an error DSS_PERIPH_ERRAGG to the Processor
7	dss_hwa_cfg_wr	R/W	0h	Mask the Write error from DSS_HWA_CFG space from generating an error DSS_PERIPH_ERRAGG to the Processor
6	dss_hwa_cfg_rd	R/W	0h	Mask the Read error from DSS_HWA_CFG space from generating an error DSS_PERIPH_ERRAGG to the Processor
5	dss_cm4_ctrl_wr	R/W	0h	Mask the Write error from DSS_CM4_CTRL space from generating an error DSS_PERIPH_ERRAGG to the Processor
4	dss_cm4_ctrl_rd	R/W	0h	Mask the Read error from DSS_CM4_CTRL space from generating an error DSS_PERIPH_ERRAGG to the Processor
3	dss_ctrl_wr	R/W	0h	Mask the Write error from DSS_CTRL space from generating an error DSS_PERIPH_ERRAGG to the Processor
2	dss_ctrl_rd	R/W	0h	Mask the Read error from DSS_CTRL space from generating an error DSS_PERIPH_ERRAGG to the Processor
1	dss_rcm_wr	R/W	0h	Mask the Write error from DSS_RCM space from generating an error DSS_PERIPH_ERRAGG to the Processor
0	dss_rcm_rd	R/W	0h	Mask the Read error from DSS_RCM space from generating an error DSS_PERIPH_ERRAGG to the Processor

6.2.6.64 DSS_PERIPH_ERRAGG_STATUS0 Register (Offset = 564h) [reset = X]

DSS_PERIPH_ERRAGG_STATUS0 is shown in Figure 6-584 and described in Table 6-590.

Return to the Summary Table.

Figure 6-584. DSS_PERIPH_ERRAGG_STATUS0 Register

31	30	29	28	27	26	25	24
RESERVED							
R/W-X							
23	22	21	20	19	18	17	16
RESERVED							
R/W-X							
15	14	13	12	11	10	9	8
RESERVED				rcss_ctrl_wr	rcss_ctrl_rd	rcss_rcm_wr	rcss_rcm_rd

Copyright © 2025 Texas Instruments Incorporated

Figure 6-584. DSS_PERIPH_ERRAGG_STATUS0 Register (continued)

R/W-X				R/W-0h	R/W-0h	R/W-0h	R/W-0h
7	6	5	4	3	2	1	0
dss_hwa_cfg_wr	dss_hwa_cfg_rd	dss_cm4_ctrl_wr	dss_cm4_ctrl_rd	dss_ctrl_wr	dss_ctrl_rd	dss_rcm_wr	dss_rcm_rd
R/W-0h	R/W-0h	R/W-0h	R/W-0h	R/W-0h	R/W-0h	R/W-0h	R/W-0h

Table 6-590. DSS_PERIPH_ERRAGG_STATUS0 Register Field Descriptions

Bit	Field	Type	Reset	Description
31-12	RESERVED	R/W	X	
11	rcss_ctrl_wr	R/W	0h	Status of the Write error from RCSS_CTRL space. Read 1 : Read error occurred on access to the RCSS_CTRL space
10	rcss_ctrl_rd	R/W	0h	Status of the Read error from RCSS_CTRL space. Read 1 : Read error occurred on access to the RCSS_CTRL space
9	rcss_rcm_wr	R/W	0h	Status of the Write error from RCSS_RCM space. Read 1 : Read error occurred on access to the RCSS_RCM space
8	rcss_rcm_rd	R/W	0h	Status of the Read error from RCSS_RCM space. Read 1 : Read error occurred on access to the RCSS_RCM space
7	dss_hwa_cfg_wr	R/W	0h	Status of the Write error from DSS_HWA_CFG space. Read 1 : Read error occurred on access to the DSS_HWA_CFG space
6	dss_hwa_cfg_rd	R/W	0h	Status of the Read error from DSS_HWA_CFG space. Read 1 : Read error occurred on access to the DSS_HWA_CFG space
5	dss_cm4_ctrl_wr	R/W	0h	Status of the Write error from DSS_CM4_CTRL space. Read 1 : Read error occurred on access to the DSS_CM4_CTRL space
4	dss_cm4_ctrl_rd	R/W	0h	Status of the Read error from DSS_CM4_CTRL space. Read 1 : Read error occurred on access to the DSS_CM4_CTRL space
3	dss_ctrl_wr	R/W	0h	Status of the Write error from DSS_CTRL space. Read 1 : Read error occurred on access to the DSS_CTRL space
2	dss_ctrl_rd	R/W	0h	Status of the Read error from DSS_CTRL space. Read 1 : Read error occurred on access to the DSS_CTRL space
1	dss_rcm_wr	R/W	0h	Status of the Write error from DSS_RCM space. Read 1 : Read error occurred on access to the DSS_RCM space
0	dss_rcm_rd	R/W	0h	Status of the Read error from DSS_RCM space. Read 1 : Read error occurred on access to the DSS_RCM space

6.2.6.65 DSS_PERIPH_ERRAGG_STATUS_RAW0 Register (Offset = 568h) [reset = X]

DSS_PERIPH_ERRAGG_STATUS_RAW0 is shown in Figure 6-585 and described in Table 6-591.

Return to the Summary Table.

Figure 6-585. DSS_PERIPH_ERRAGG_STATUS_RAW0 Register

31	30	29	28	27	26	25	24
RESERVED							
R/W-X							
23	22	21	20	19	18	17	16
RESERVED							
R/W-X							
15	14	13	12	11	10	9	8
RESERVED				rcss_ctrl_wr	rcss_ctrl_rd	rcss_rcm_wr	rcss_rcm_rd
R/W-X				R/W-0h	R/W-0h	R/W-0h	R/W-0h
7	6	5	4	3	2	1	0

Copyright © 2025 Texas Instruments Incorporated

Figure 6-585. DSS_PERIPH_ERRAGG_STATUS_RAW0 Register (continued)

dss_hwa_cfg_wr	dss_hwa_cfg_rd	dss_cm4_ctrl_wr	dss_cm4_ctrl_rd	dss_ctrl_wr	dss_ctrl_rd	dss_rcm_wr	dss_rcm_rd
R/W-0h	R/W-0h	R/W-0h	R/W-0h	R/W-0h	R/W-0h	R/W-0h	R/W-0h

Table 6-591. DSS_PERIPH_ERRAGG_STATUS_RAW0 Register Field Descriptions

Bit	Field	Type	Reset	Description
31-12	RESERVED	R/W	X	
11	rcss_ctrl_wr	R/W	0h	Raw Status of the Write error from RCSS_CTRL space irrespective of it being masked. Read 1 : Read error occurred on access to the RCSS_CTRL space
10	rcss_ctrl_rd	R/W	0h	Raw Status of the Read error from RCSS_CTRL space irrespective of it being masked. Read 1 : Read error occurred on access to the RCSS_CTRL space
9	rcss_rcm_wr	R/W	0h	Raw Status of the Write error from RCSS_RCM space irrespective of it being masked. Read 1 : Read error occurred on access to the RCSS_RCM space
8	rcss_rcm_rd	R/W	0h	Raw Status of the Read error from RCSS_RCM space irrespective of it being masked. Read 1 : Read error occurred on access to the RCSS_RCM space
7	dss_hwa_cfg_wr	R/W	0h	Raw Status of the Write error from DSS_HWA_CFG space irrespective of it being masked. Read 1 : Read error occurred on access to the DSS_HWA_CFG space
6	dss_hwa_cfg_rd	R/W	0h	Raw Status of the Read error from DSS_HWA_CFG space irrespective of it being masked. Read 1 : Read error occurred on access to the DSS_HWA_CFG space
5	dss_cm4_ctrl_wr	R/W	0h	Raw Status of the Write error from DSS_CM4_CTRL space irrespective of it being masked. Read 1 : Read error occurred on access to the DSS_CM4_CTRL space
4	dss_cm4_ctrl_rd	R/W	0h	Raw Status of the Read error from DSS_CM4_CTRL space irrespective of it being masked. Read 1 : Read error occurred on access to the DSS_CM4_CTRL space
3	dss_ctrl_wr	R/W	0h	Raw Status of the Write error from DSS_CTRL space irrespective of it being masked. Read 1 : Read error occurred on access to the DSS_CTRL space
2	dss_ctrl_rd	R/W	0h	Raw Status of the Read error from DSS_CTRL space irrespective of it being masked. Read 1 : Read error occurred on access to the DSS_CTRL space
1	dss_rcm_wr	R/W	0h	Raw Status of the Write error from DSS_RCM space irrespective of it being masked. Read 1 : Read error occurred on access to the DSS_RCM space
0	dss_rcm_rd	R/W	0h	Raw Status of the Read error from DSS_RCM space irrespective of it being masked. Read 1 : Read error occurred on access to the DSS_RCM space

6.2.6.66 DSS_DSP_MBOX_WRITE_DONE Register (Offset = 56Ch) [reset = X]

DSS_DSP_MBOX_WRITE_DONE is shown in Figure 6-586 and described in Table 6-592.

Return to the Summary Table.

Figure 6-586. DSS_DSP_MBOX_WRITE_DONE Register

31	30	29	28	27	26	25	24
RESERVED			proc_7	RESERVED			proc_6
R/W-X			R/W-0h	R/W-X			R/W-0h
23	22	21	20	19	18	17	16

Copyright © 2025 Texas Instruments Incorporated

Figure 6-586. DSS_DSP_MBOX_WRITE_DONE Register (continued)

RESERVED			proc_5	RESERVED			proc_4
R/W-X			R/W-0h	R/W-X			R/W-0h
15	14	13	12	11	10	9	8
RESERVED			proc_3	RESERVED			proc_2
R/W-X			R/W-0h	R/W-X			R/W-0h
7	6	5	4	3	2	1	0
RESERVED			proc_1	RESERVED			proc_0
R/W-X			R/W-0h	R/W-X			R/W-0h

Table 6-592. DSS_DSP_MBOX_WRITE_DONE Register Field Descriptions

Bit	Field	Type	Reset	Description
31-29	RESERVED	R/W	X	
28	proc_7	R/W	0h	Write pulse bit field:This register should be written once finishing writing into the mailbox memory of processor 7
27-25	RESERVED	R/W	X	
24	proc_6	R/W	0h	Write pulse bit field: This register should be written once finishing writing into the mailbox memory of processor 6
23-21	RESERVED	R/W	X	
20	proc_5	R/W	0h	Write pulse bit field: This register should be written once finishing writing into the mailbox memory of processor 5
19-17	RESERVED	R/W	X	
16	proc_4	R/W	0h	Write pulse bit field: This register should be written once finishing writing into the mailbox memory of processor 4
15-13	RESERVED	R/W	X	
12	proc_3	R/W	0h	Write pulse bit field: This register should be written once finishing writing into the mailbox memory of processor 3
11-9	RESERVED	R/W	X	
8	proc_2	R/W	0h	Write pulse bit field: This register should be written once finishing writing into the mailbox memory of processor 2
7-5	RESERVED	R/W	X	
4	proc_1	R/W	0h	Write pulse bit field: This register should be written once finishing writing into the mailbox memory of processor 1
3-1	RESERVED	R/W	X	
0	proc_0	R/W	0h	Write pulse bit field: This register should be written once finishing writing into the mailbox memory of processor 0

6.2.6.67 DSS_DSP_MBOX_READ_REQ Register (Offset = 570h) [reset = X]

DSS_DSP_MBOX_READ_REQ is shown in Figure 6-587 and described in Table 6-593.

Return to the Summary Table.

Figure 6-587. DSS_DSP_MBOX_READ_REQ Register

31	30	29	28	27	26	25	24
RESERVED			proc_7	RESERVED			proc_6
R/W-X			R/W-0h	R/W-X			R/W-0h
23	22	21	20	19	18	17	16
RESERVED			proc_5	RESERVED			proc_4
R/W-X			R/W-0h	R/W-X			R/W-0h

Copyright © 2025 Texas Instruments Incorporated

Figure 6-587. DSS_DSP_MBOX_READ_REQ Register (continued)

15	14	13	12	11	10	9	8
RESERVED			proc_3	RESERVED			proc_2
R/W-X			R/W-0h	R/W-X			R/W-0h
7	6	5	4	3	2	1	0
RESERVED			proc_1	RESERVED			proc_0
R/W-X			R/W-0h	R/W-X			R/W-0h

Table 6-593. DSS_DSP_MBOX_READ_REQ Register Field Descriptions

Bit	Field	Type	Reset	Description
31-29	RESERVED	R/W	X	
28	proc_7	R/W	0h	This is request from processor 7 to DSS_DSP. Requesting it to read from mailbox.
27-25	RESERVED	R/W	X	
24	proc_6	R/W	0h	This is request from processor 6 to DSS_DSP. Requesting it to read from mailbox.
23-21	RESERVED	R/W	X	
20	proc_5	R/W	0h	This is request from processor 5 to DSS_DSP. Requesting it to read from mailbox.
19-17	RESERVED	R/W	X	
16	proc_4	R/W	0h	This is request from processor 4 to DSS_DSP. Requesting it to read from mailbox.
15-13	RESERVED	R/W	X	
12	proc_3	R/W	0h	This is request from processor 3 to DSS_DSP. Requesting it to read from mailbox.
11-9	RESERVED	R/W	X	
8	proc_2	R/W	0h	This is request from processor 2 to DSS_DSP. Requesting it to read from mailbox.
7-5	RESERVED	R/W	X	
4	proc_1	R/W	0h	This is request from processor 1 to DSS_DSP. Requesting it to read from mailbox.
3-1	RESERVED	R/W	X	
0	proc_0	R/W	0h	This is request from processor 0 to DSS_DSP. Requesting it to read from mailbox.

6.2.6.68 DSS_DSP_MBOX_READ_DONE Register (Offset = 574h) [reset = X]

DSS_DSP_MBOX_READ_DONE is shown in Figure 6-588 and described in Table 6-594.

Return to the Summary Table.

Figure 6-588. DSS_DSP_MBOX_READ_DONE Register

31	30	29	28	27	26	25	24
RESERVED			proc_7	RESERVED			proc_6
R/W-X			R/W-0h	R/W-X			R/W-0h
23	22	21	20	19	18	17	16
RESERVED			proc_5	RESERVED			proc_4
R/W-X			R/W-0h	R/W-X			R/W-0h
15	14	13	12	11	10	9	8
RESERVED			proc_3	RESERVED			proc_2

Copyright © 2025 Texas Instruments Incorporated

Figure 6-588. DSS_DSP_MBOX_READ_DONE Register (continued)

R/W-X			R/W-0h		R/W-X		R/W-0h
7	6	5	4	3	2	1	0
RESERVED			proc_1	RESERVED			proc_0
R/W-X			R/W-0h	R/W-X			R/W-0h

Table 6-594. DSS_DSP_MBOX_READ_DONE Register Field Descriptions

Bit	Field	Type	Reset	Description
31-29	RESERVED	R/W	X	
28	proc_7	R/W	0h	This register should be written once finishing reading from DSS_DSP's mailbox written by proc 7
27-25	RESERVED	R/W	X	
24	proc_6	R/W	0h	This register should be written once finishing reading from DSS_DSP's mailbox written by proc 6
23-21	RESERVED	R/W	X	
20	proc_5	R/W	0h	This register should be written once finishing reading from DSS_DSP's mailbox written by proc 5
19-17	RESERVED	R/W	X	
16	proc_4	R/W	0h	This register should be written once finishing reading from DSS_DSP's mailbox written by proc 4
15-13	RESERVED	R/W	X	
12	proc_3	R/W	0h	This register should be written once finishing reading from DSS_DSP's mailbox written by proc 3
11-9	RESERVED	R/W	X	
8	proc_2	R/W	0h	This register should be written once finishing reading from DSS_DSP's mailbox written by proc 2
7-5	RESERVED	R/W	X	
4	proc_1	R/W	0h	This register should be written once finishing reading from DSS_DSP's mailbox written by proc 1
3-1	RESERVED	R/W	X	
0	proc_0	R/W	0h	This register should be written once finishing reading from DSS_DSP's mailbox written by proc 0

6.2.6.69 DSS_WDT_EVENT_CAPTURE_SEL Register (Offset = 578h) [reset = X]

DSS_WDT_EVENT_CAPTURE_SEL is shown in Figure 6-589 and described in Table 6-595.

Return to the Summary Table.

Figure 6-589. DSS_WDT_EVENT_CAPTURE_SEL Register

31	30	29	28	27	26	25	24
RESERVED							
R/W-X							
23	22	21	20	19	18	17	16
RESERVED							
R/W-X							
15	14	13	12	11	10	9	8
RESERVED	cap1						
R/W-X	R/W-0h						
7	6	5	4	3	2	1	0

Copyright © 2025 Texas Instruments Incorporated

Figure 6-589. DSS_WDT_EVENT_CAPTURE_SEL Register (continued)

RESERVED	cap0
R/W-X	R/W-0h

Table 6-595. DSS_WDT_EVENT_CAPTURE_SEL Register Field Descriptions

Bit	Field	Type	Reset	Description
31-15	RESERVED	R/W	X	
14-8	cap1	R/W	0h	Select the DSS_WDT Capture Event 1 from the DSS DSP Interrupt Map
7	RESERVED	R/W	X	
6-0	cap0	R/W	0h	Select the DSS_WDT Capture Event 0 from the DSS DSP Interrupt Map

6.2.6.70 DSS_RTIA_EVENT_CAPTURE_SEL Register (Offset = 57Ch) [reset = X]

DSS_RTIA_EVENT_CAPTURE_SEL is shown in Figure 6-590 and described in Table 6-596.

Return to the Summary Table.

Figure 6-590. DSS_RTIA_EVENT_CAPTURE_SEL Register

31	30	29	28	27	26	25	24
RESERVED							
R/W-X							
23	22	21	20	19	18	17	16
RESERVED							
R/W-X							
15	14	13	12	11	10	9	8
RESERVED	cap1						
R/W-X	R/W-0h						
7	6	5	4	3	2	1	0
RESERVED	cap0						
R/W-X	R/W-0h						

Table 6-596. DSS_RTIA_EVENT_CAPTURE_SEL Register Field Descriptions

Bit	Field	Type	Reset	Description
31-15	RESERVED	R/W	X	
14-8	cap1	R/W	0h	Select the DSS_RTIA Capture Event 1 from the DSS DSP Interrupt Map
7	RESERVED	R/W	X	
6-0	cap0	R/W	0h	Select the DSS_RTIA Capture Event 0 from the DSS DSP Interrupt Map

6.2.6.71 DSS_RTIB_EVENT_CAPTURE_SEL Register (Offset = 580h) [reset = X]

DSS_RTIB_EVENT_CAPTURE_SEL is shown in Figure 6-591 and described in Table 6-597.

Return to the Summary Table.

Figure 6-591. DSS_RTIB_EVENT_CAPTURE_SEL Register

31	30	29	28	27	26	25	24
RESERVED							

Copyright © 2025 Texas Instruments Incorporated

Figure 6-591. DSS_RTIB_EVENT_CAPTURE_SEL Register (continued)

R/W-X							
23	22	21	20	19	18	17	16
RESERVED							
R/W-X							
15	14	13	12	11	10	9	8
RESERVED	cap1						
R/W-X	R/W-0h						
7	6	5	4	3	2	1	0
RESERVED	cap0						
R/W-X	R/W-0h						

Table 6-597. DSS_RTIB_EVENT_CAPTURE_SEL Register Field Descriptions

Bit	Field	Type	Reset	Description
31-15	RESERVED	R/W	X	
14-8	cap1	R/W	0h	Select the DSS_RTIB Capture Event 1 from the DSS DSP Interrupt Map
7	RESERVED	R/W	X	
6-0	cap0	R/W	0h	Select the DSS_RTIB Capture Event 0 from the DSS DSP Interrupt Map

6.2.6.72 DBG_ACK_CPU_CTRL Register (Offset = 584h) [reset = X]

DBG_ACK_CPU_CTRL is shown in Figure 6-592 and described in Table 6-598.

Return to the Summary Table.

Figure 6-592. DBG_ACK_CPU_CTRL Register

31	30	29	28	27	26	25	24	23	22	21	20	19	18	17	16
RESERVED															
R/W-X															
15	14	13	12	11	10	9	8	7	6	5	4	3	2	1	0
RESERVED															sel
R/W-X															R/W-0h

Table 6-598. DBG_ACK_CPU_CTRL Register Field Descriptions

Bit	Field	Type	Reset	Description
31-1	RESERVED	R/W	X	
0	sel	R/W	0h	Select the Processor Suspend that is used to Suspend the DSS Peripehrals 0: DSP 1:MSS CR5

6.2.6.73 DBG_ACK_CTL0 Register (Offset = 588h) [reset = X]

DBG_ACK_CTL0 is shown in Figure 6-593 and described in Table 6-599.

Return to the Summary Table.

Figure 6-593. DBG_ACK_CTL0 Register

31	30	29	28	27	26	25	24
RESERVED							

Copyright © 2025 Texas Instruments Incorporated

Figure 6-593. DBG_ACK_CTL0 Register (continued)

R/W-X							
23	22	21	20	19	18	17	16
RESERVED	DSS_WDT			RESERVED	DSS_SCIA		
R/W-X	R/W-0h			R/W-X	R/W-0h		
15	14	13	12	11	10	9	8
RESERVED	DSS_RTIB			RESERVED	DSS_RTIA		
R/W-X	R/W-0h			R/W-X	R/W-0h		
7	6	5	4	3	2	1	0
RESERVED	DSS_DCCB			RESERVED	DSS_DCCA		
R/W-X	R/W-0h			R/W-X	R/W-0h		

Table 6-599. DBG_ACK_CTL0 Register Field Descriptions

Bit	Field	Type	Reset	Description
31-23	RESERVED	R/W	X	
22-20	DSS_WDT	R/W	0h	Enable Suspend control for the peripheral. 0 :Peripheral not suspended along with processor 1: Peripehal Suspended along with procesor
19	RESERVED	R/W	X	
18-16	DSS_SCIA	R/W	0h	Enable Suspend control for the peripheral. 0 :Peripheral not suspended along with processor 1: Peripehal Suspended along with procesor
15	RESERVED	R/W	X	
14-12	DSS_RTIB	R/W	0h	Enable Suspend control for the peripheral. 0 :Peripheral not suspended along with processor 1: Peripehal Suspended along with procesor
11	RESERVED	R/W	X	
10-8	DSS_RTIA	R/W	0h	Enable Suspend control for the peripheral. 0 :Peripheral not suspended along with processor 1: Peripehal Suspended along with procesor
7	RESERVED	R/W	X	
6-4	DSS_DCCB	R/W	0h	Enable Suspend control for the peripheral. 0 :Peripheral not suspended along with processor 1: Peripehal Suspended along with procesor
3	RESERVED	R/W	X	
2-0	DSS_DCCA	R/W	0h	Enable Suspend control for the peripheral. 0 :Peripheral not suspended along with processor 1: Peripehal Suspended along with procesor

6.2.6.74 DBG_ACK_CTL1 Register (Offset = 58Ch) [reset = X]

DBG_ACK_CTL1 is shown in Figure 6-594 and described in Table 6-600.

Return to the Summary Table.

Figure 6-594. DBG_ACK_CTL1 Register

31	30	29	28	27	26	25	24
RESERVED	DSS_HWA			RESERVED	DSS_MCRC		
R/W-X	R/W-0h			R/W-X	R/W-0h		
23	22	21	20	19	18	17	16
RESERVED							

Copyright © 2025 Texas Instruments Incorporated

Figure 6-594. DBG_ACK_CTL1 Register (continued)

R/W-X							
15	14	13	12	11	10	9	8
RESERVED							
R/W-X							
7	6	5	4	3	2	1	0
RESERVED							
R/W-X							

Table 6-600. DBG_ACK_CTL1 Register Field Descriptions

Bit	Field	Type	Reset	Description
31	RESERVED	R/W	X	
30-28	DSS_HWA	R/W	0h	Enable Suspend control for the peripheral. 0 :Peripheral not suspended along with processor 1: Peripehal Suspended along with procesor
27	RESERVED	R/W	X	
26-24	DSS_MCRC	R/W	0h	Enable Suspend control for the peripheral. 0 :Peripheral not suspended along with processor 1: Peripehal Suspended along with procesor
23-0	RESERVED	R/W	X	

6.2.6.75 DSS_DSP_INT_SEL Register (Offset = 590h) [reset = X]

DSS_DSP_INT_SEL is shown in Figure 6-595 and described in Table 6-601.

Return to the Summary Table.

Figure 6-595. DSS_DSP_INT_SEL Register

31	30	29	28	27	26	25	24
RESERVED							
R/W-X							
23	22	21	20	19	18	17	16
RESERVED							
R/W-X							
15	14	13	12	11	10	9	8
RESERVED							
R/W-X							
7	6	5	4	3	2	1	0
RESERVED					RCSS_CSI2_ICSSM		
R/W-X					R/W-0h		

Table 6-601. DSS_DSP_INT_SEL Register Field Descriptions

Bit	Field	Type	Reset	Description
31-3	RESERVED	R/W	X	
2-0	RCSS_CSI2_ICSSM	R/W	0h	DSS DSP Interrupt selcet 0x0: CSI2 Interrupts are propagated to DSP 0x7 : ICSSM Interrupts are propagted to DSP

Copyright © 2025 Texas Instruments Incorporated

6.2.6.76 DSS_CBUFF_TRIGGER_SEL Register (Offset = 594h) [reset = X]

DSS_CBUFF_TRIGGER_SEL is shown in Figure 6-596 and described in Table 6-602.

Return to the Summary Table.

Figure 6-596. DSS_CBUFF_TRIGGER_SEL Register

31	30	29	28	27	26	25	24	23	22	21	20	19	18	17	16	15	14	13	12	11	10	9	8	7	6	5	4	3	2	1	0
RESERVED																									sel						
R/W-X																									R/W-0h						

Table 6-602. DSS_CBUFF_TRIGGER_SEL Register Field Descriptions

Bit	Field	Type	Reset	Description
31-7	RESERVED	R/W	X	
6-0	sel	R/W	0h	DSS CBUFF HW Trigger select from DSS DSP Interrupt Map

6.2.6.77 DSS_BUS_SAFETY_CTRL Register (Offset = 800h) [reset = X]

DSS_BUS_SAFETY_CTRL is shown in Figure 6-597 and described in Table 6-603.

Return to the Summary Table.

Figure 6-597. DSS_BUS_SAFETY_CTRL Register

31	30	29	28	27	26	25	24
RESERVED							
R/W-X							
23	22	21	20	19	18	17	16
RESERVED							
R/W-X							
15	14	13	12	11	10	9	8
RESERVED							
R/W-X							
7	6	5	4	3	2	1	0
RESERVED	clk_disable			RESERVED	enable		
R/W-X	R/W-0h			R/W-X	R/W-0h		

Table 6-603. DSS_BUS_SAFETY_CTRL Register Field Descriptions

Bit	Field	Type	Reset	Description
31-7	RESERVED	R/W	X	
6-4	clk_disable	R/W	0h	Option to clock gate the safety infrastructure is Safety is disabled
3	RESERVED	R/W	X	
2-0	enable	R/W	0h	

6.2.6.78 DSS_BUS_SAFETY_SEC_ERR_STAT0 Register (Offset = 804h) [reset = X]

DSS_BUS_SAFETY_SEC_ERR_STAT0 is shown in Figure 6-598 and described in Table 6-604.

Return to the Summary Table.

Figure 6-598. DSS_BUS_SAFETY_SEC_ERR_STAT0 Register

31	30	29	28	27	26	25	24

Copyright © 2025 Texas Instruments Incorporated

Figure 6-598. DSS_BUS_SAFETY_SEC_ERR_STAT0 Register (continued)

RESERVED			DSS_MDO_FIFO	DSS_CBUFF_FIFO	DSS_PCR	DSS_TPTC_C5_WR	DSS_TPTC_C4_WR
R-X			R-0h	R-0h	R-0h	R-0h	R-0h
23	22	21	20	19	18	17	16
DSS_TPTC_C3_WR	DSS_TPTC_C2_WR	DSS_TPTC_C1_WR	DSS_TPTC_C0_WR	DSS_TPTC_B1_WR	DSS_TPTC_B0_WR	DSS_TPTC_A1_WR	DSS_TPTC_A0_WR
R-0h	R-0h	R-0h	R-0h	R-0h	R-0h	R-0h	R-0h
15	14	13	12	11	10	9	8
DSS_TPTC_C5_RD	DSS_TPTC_C4_RD	DSS_TPTC_C3_RD	DSS_TPTC_C2_RD	DSS_TPTC_C1_RD	DSS_TPTC_C0_RD	DSS_TPTC_B1_RD	DSS_TPTC_B0_RD
R-0h	R-0h	R-0h	R-0h	R-0h	R-0h	R-0h	R-0h
7	6	5	4	3	2	1	0
DSS_TPTC_A1_RD	DSS_TPTC_A0_RD	DSS_DSP_SDMA	DSS_L3_BANKD	DSS_L3_BANKC	DSS_L3_BANKB	DSS_L3_BANKA	DSS_DSP_MDMA
R-0h	R-0h	R-0h	R-0h	R-0h	R-0h	R-0h	R-0h

Table 6-604. DSS_BUS_SAFETY_SEC_ERR_STAT0 Register Field Descriptions

Bit	Field	Type	Reset	Description
31-29	RESERVED	R	X	
28	DSS_MDO_FIFO	R	0h	
27	DSS_CBUFF_FIFO	R	0h	
26	DSS_PCR	R	0h	
25	DSS_TPTC_C5_WR	R	0h	
24	DSS_TPTC_C4_WR	R	0h	
23	DSS_TPTC_C3_WR	R	0h	
22	DSS_TPTC_C2_WR	R	0h	
21	DSS_TPTC_C1_WR	R	0h	
20	DSS_TPTC_C0_WR	R	0h	
19	DSS_TPTC_B1_WR	R	0h	
18	DSS_TPTC_B0_WR	R	0h	
17	DSS_TPTC_A1_WR	R	0h	
16	DSS_TPTC_A0_WR	R	0h	
15	DSS_TPTC_C5_RD	R	0h	
14	DSS_TPTC_C4_RD	R	0h	
13	DSS_TPTC_C3_RD	R	0h	
12	DSS_TPTC_C2_RD	R	0h	
11	DSS_TPTC_C1_RD	R	0h	
10	DSS_TPTC_C0_RD	R	0h	
9	DSS_TPTC_B1_RD	R	0h	
8	DSS_TPTC_B0_RD	R	0h	
7	DSS_TPTC_A1_RD	R	0h	
6	DSS_TPTC_A0_RD	R	0h	
5	DSS_DSP_SDMA	R	0h	
4	DSS_L3_BANKD	R	0h	
3	DSS_L3_BANKC	R	0h	
2	DSS_L3_BANKB	R	0h	
1	DSS_L3_BANKA	R	0h	

Copyright © 2025 Texas Instruments Incorporated

Table 6-604. DSS_BUS_SAFETY_SEC_ERR_STAT0 Register Field Descriptions (continued)

Bit	Field	Type	Reset	Description
0	DSS_DSP_MDMA	R	0h	

6.2.6.79 DSS_BUS_SAFETY_SEC_ERR_STAT1 Register (Offset = 808h) [reset = X]

DSS_BUS_SAFETY_SEC_ERR_STAT1 is shown in Figure 6-599 and described in Table 6-605.

Return to the Summary Table.

Figure 6-599. DSS_BUS_SAFETY_SEC_ERR_STAT1 Register

31	30	29	28	27	26	25	24
RESERVED							
R-X							
23	22	21	20	19	18	17	16
RESERVED			DSS_CMC_COMP	DSS_CMC_UCOMP3	DSS_CMC_UCOMP2	DSS_CMC_UCOMP1	DSS_CMC_UCOMP0
R-X			R-0h	R-0h	R-0h	R-0h	R-0h
15	14	13	12	11	10	9	8
RESERVED							
R-X							
7	6	5	4	3	2	1	0
RESERVED		DSS_MBOX	DSS_CM4_S	DSS_CM4_M	DSS_HWA_DMA1	DSS_HWA_DMA0	DSS_MCRC
R-X		R-0h	R-0h	R-0h	R-0h	R-0h	R-0h

Table 6-605. DSS_BUS_SAFETY_SEC_ERR_STAT1 Register Field Descriptions

Bit	Field	Type	Reset	Description
31-21	RESERVED	R	X	
20	DSS_CMC_COMP	R	0h	
19	DSS_CMC_UCOMP3	R	0h	
18	DSS_CMC_UCOMP2	R	0h	
17	DSS_CMC_UCOMP1	R	0h	
16	DSS_CMC_UCOMP0	R	0h	
15-6	RESERVED	R	X	
5	DSS_MBOX	R	0h	
4	DSS_CM4_S	R	0h	
3	DSS_CM4_M	R	0h	
2	DSS_HWA_DMA1	R	0h	
1	DSS_HWA_DMA0	R	0h	
0	DSS_MCRC	R	0h	

6.2.6.80 DSS_DSP_MDMA_BUS_SAFETY_CTRL Register (Offset = 80Ch) [reset = X]

DSS_DSP_MDMA_BUS_SAFETY_CTRL is shown in Figure 6-600 and described in Table 6-606.

Return to the Summary Table.

Figure 6-600. DSS_DSP_MDMA_BUS_SAFETY_CTRL Register

31	30	29	28	27	26	25	24

Copyright © 2025 Texas Instruments Incorporated

Figure 6-600. DSS_DSP_MDMA_BUS_SAFETY_CTRL Register (continued)

RESERVED							
R/W-X							
23	22	21	20	19	18	17	16
type							
R-Fh							
15	14	13	12	11	10	9	8
RESERVED							err_clear
R/W-X							R/W-0h
7	6	5	4	3	2	1	0
RESERVED						enable	
R/W-X						R/W-7h	

Table 6-606. DSS_DSP_MDMA_BUS_SAFETY_CTRL Register Field Descriptions

Bit	Field	Type	Reset	Description
31-24	RESERVED	R/W	X	
23-16	type	R	Fh	
15-9	RESERVED	R/W	X	
8	err_clear	R/W	0h	
7-3	RESERVED	R/W	X	
2-0	enable	R/W	7h	

6.2.6.81 DSS_DSP_MDMA_BUS_SAFETY_FI Register (Offset = 810h) [reset = X]

DSS_DSP_MDMA_BUS_SAFETY_FI is shown in Figure 6-601 and described in Table 6-607.

Return to the Summary Table.

Figure 6-601. DSS_DSP_MDMA_BUS_SAFETY_FI Register

31	30	29	28	27	26	25	24
safe							
R/W-0h							
23	22	21	20	19	18	17	16
main							
R/W-0h							
15	14	13	12	11	10	9	8
data							
R/W-0h							
7	6	5	4	3	2	1	0
RESERVED		ded	sec	global_safe_req	global_main_req	global_safe	global_main
R/W-X		R/W-0h	R/W-0h	R/W-0h	R/W-0h	R/W-0h	R/W-0h

Table 6-607. DSS_DSP_MDMA_BUS_SAFETY_FI Register Field Descriptions

Bit	Field	Type	Reset	Description
31-24	safe	R/W	0h	
23-16	main	R/W	0h	

Copyright © 2025 Texas Instruments Incorporated

Table 6-607. DSS_DSP_MDMA_BUS_SAFETY_FI Register Field Descriptions (continued)

Bit	Field	Type	Reset	Description
15-8	data	R/W	0h	
7-6	RESERVED	R/W	X	
5	ded	R/W	0h	
4	sec	R/W	0h	
3	global_safe_req	R/W	0h	
2	global_main_req	R/W	0h	
1	global_safe	R/W	0h	
0	global_main	R/W	0h	

6.2.6.82 DSS_DSP_MDMA_BUS_SAFETY_ERR Register (Offset = 814h) [reset = 0h]

DSS_DSP_MDMA_BUS_SAFETY_ERR is shown in Figure 6-602 and described in Table 6-608.

Return to the Summary Table.

Figure 6-602. DSS_DSP_MDMA_BUS_SAFETY_ERR Register

31	30	29	28	27	26	25	24	23	22	21	20	19	18	17	16
ded								sec							
R-0h								R-0h							
15	14	13	12	11	10	9	8	7	6	5	4	3	2	1	0
comp_check								comp_err							
R-0h								R-0h							

Table 6-608. DSS_DSP_MDMA_BUS_SAFETY_ERR Register Field Descriptions

Bit	Field	Type	Reset	Description
31-24	ded	R	0h	
23-16	sec	R	0h	
15-8	comp_check	R	0h	
7-0	comp_err	R	0h	

6.2.6.83 DSS_DSP_MDMA_BUS_SAFETY_ERR_STAT_DATA0 Register (Offset = 818h) [reset = 0h]

DSS_DSP_MDMA_BUS_SAFETY_ERR_STAT_DATA0 is shown in Figure 6-603 and described in Table 6-609.

Return to the Summary Table.

Figure 6-603. DSS_DSP_MDMA_BUS_SAFETY_ERR_STAT_DATA0 Register

31	30	29	28	27	26	25	24	23	22	21	20	19	18	17	16	15	14	13	12	11	10	9	8	7	6	5	4	3	2	1	0
d3								d2								d1								d0							
R-0h								R-0h								R-0h								R-0h							

Table 6-609. DSS_DSP_MDMA_BUS_SAFETY_ERR_STAT_DATA0 Register Field Descriptions

Bit	Field	Type	Reset	Description
31-24	d3	R	0h	
23-16	d2	R	0h	
15-8	d1	R	0h	
7-0	d0	R	0h	

Copyright © 2025 Texas Instruments Incorporated

6.2.6.84 DSS_DSP_MDMA_BUS_SAFETY_ERR_STAT_DATA1 Register (Offset = 81Ch) [reset = 0h]

DSS_DSP_MDMA_BUS_SAFETY_ERR_STAT_DATA1 is shown in Figure 6-604 and described in Table 6-610.

Return to the Summary Table.

Figure 6-604. DSS_DSP_MDMA_BUS_SAFETY_ERR_STAT_DATA1 Register

31	30	29	28	27	26	25	24	23	22	21	20	19	18	17	16	15	14	13	12	11	10	9	8	7	6	5	4	3	2	1	0
d7								d6								d5								d4							
R-0h								R-0h								R-0h								R-0h							

Table 6-610. DSS_DSP_MDMA_BUS_SAFETY_ERR_STAT_DATA1 Register Field Descriptions

Bit	Field	Type	Reset	Description
31-24	d7	R	0h	
23-16	d6	R	0h	
15-8	d5	R	0h	
7-0	d4	R	0h	

6.2.6.85 DSS_DSP_MDMA_BUS_SAFETY_ERR_STAT_CMD Register (Offset = 820h) [reset = 0h]

DSS_DSP_MDMA_BUS_SAFETY_ERR_STAT_CMD is shown in Figure 6-605 and described in Table 6-611.

Return to the Summary Table.

Figure 6-605. DSS_DSP_MDMA_BUS_SAFETY_ERR_STAT_CMD Register

31	30	29	28	27	26	25	24	23	22	21	20	19	18	17	16	15	14	13	12	11	10	9	8	7	6	5	4	3	2	1	0
stat																															
R-0h																															

Table 6-611. DSS_DSP_MDMA_BUS_SAFETY_ERR_STAT_CMD Register Field Descriptions

Bit	Field	Type	Reset	Description
31-0	stat	R	0h	

6.2.6.86 DSS_DSP_MDMA_BUS_SAFETY_ERR_STAT_WRITE Register (Offset = 824h) [reset = 0h]

DSS_DSP_MDMA_BUS_SAFETY_ERR_STAT_WRITE is shown in Figure 6-606 and described in Table 6-612.

Return to the Summary Table.

Figure 6-606. DSS_DSP_MDMA_BUS_SAFETY_ERR_STAT_WRITE Register

31	30	29	28	27	26	25	24	23	22	21	20	19	18	17	16	15	14	13	12	11	10	9	8	7	6	5	4	3	2	1	0
stat																															
R-0h																															

Table 6-612. DSS_DSP_MDMA_BUS_SAFETY_ERR_STAT_WRITE Register Field Descriptions

Bit	Field	Type	Reset	Description
31-0	stat	R	0h	

6.2.6.87 DSS_DSP_MDMA_BUS_SAFETY_ERR_STAT_READ Register (Offset = 828h) [reset = 0h]

DSS_DSP_MDMA_BUS_SAFETY_ERR_STAT_READ is shown in Figure 6-607 and described in Table 6-613.

Return to the Summary Table.

Copyright © 2025 Texas Instruments Incorporated

Figure 6-607. DSS_DSP_MDMA_BUS_SAFETY_ERR_STAT_READ Register

31	30	29	28	27	26	25	24	23	22	21	20	19	18	17	16	15	14	13	12	11	10	9	8	7	6	5	4	3	2	1	0
stat																															
R-0h																															

Table 6-613. DSS_DSP_MDMA_BUS_SAFETY_ERR_STAT_READ Register Field Descriptions

Bit	Field	Type	Reset	Description
31-0	stat	R	0h	

6.2.6.88 DSS_DSP_MDMA_BUS_SAFETY_ERR_STAT_WRITERESP Register (Offset = 82Ch) [reset = 0h]

DSS_DSP_MDMA_BUS_SAFETY_ERR_STAT_WRITERESP is shown in Figure 6-608 and described in Table 6-614.

Return to the Summary Table.

Figure 6-608. DSS_DSP_MDMA_BUS_SAFETY_ERR_STAT_WRITERESP Register

31	30	29	28	27	26	25	24	23	22	21	20	19	18	17	16	15	14	13	12	11	10	9	8	7	6	5	4	3	2	1	0
stat																															
R-0h																															

Table 6-614. DSS_DSP_MDMA_BUS_SAFETY_ERR_STAT_WRITERESP Register Field Descriptions

Bit	Field	Type	Reset	Description
31-0	stat	R	0h	

6.2.6.89 DSS_L3_BANKA_BUS_SAFETY_CTRL Register (Offset = 830h) [reset = X]

DSS_L3_BANKA_BUS_SAFETY_CTRL is shown in Figure 6-609 and described in Table 6-615.

Return to the Summary Table.

Figure 6-609. DSS_L3_BANKA_BUS_SAFETY_CTRL Register

31	30	29	28	27	26	25	24
RESERVED							
R/W-X							
23	22	21	20	19	18	17	16
type							
R-1Fh							
15	14	13	12	11	10	9	8
RESERVED							err_clear
R/W-X							R/W-0h
7	6	5	4	3	2	1	0
RESERVED						enable	
R/W-X						R/W-7h	

Table 6-615. DSS_L3_BANKA_BUS_SAFETY_CTRL Register Field Descriptions

Bit	Field	Type	Reset	Description
31-24	RESERVED	R/W	X	
23-16	type	R	1Fh	
15-9	RESERVED	R/W	X	

Copyright © 2025 Texas Instruments Incorporated

Table 6-615. DSS_L3_BANKA_BUS_SAFETY_CTRL Register Field Descriptions (continued)

Bit	Field	Type	Reset	Description
8	err_clear	R/W	0h	
7-3	RESERVED	R/W	X	
2-0	enable	R/W	7h	

6.2.6.90 DSS_L3_BANKA_BUS_SAFETY_FI Register (Offset = 834h) [reset = X]

DSS_L3_BANKA_BUS_SAFETY_FI is shown in Figure 6-610 and described in Table 6-616.

Return to the Summary Table.

Figure 6-610. DSS_L3_BANKA_BUS_SAFETY_FI Register

31	30	29	28	27	26	25	24
safe							
R/W-0h							
23	22	21	20	19	18	17	16
main							
R/W-0h							
15	14	13	12	11	10	9	8
data							
R/W-0h							
7	6	5	4	3	2	1	0
RESERVED		ded	sec	global_safe_req	global_main_req	global_safe	global_main
R/W-X		R/W-0h	R/W-0h	R/W-0h	R/W-0h	R/W-0h	R/W-0h

Table 6-616. DSS_L3_BANKA_BUS_SAFETY_FI Register Field Descriptions

Bit	Field	Type	Reset	Description
31-24	safe	R/W	0h	
23-16	main	R/W	0h	
15-8	data	R/W	0h	
7-6	RESERVED	R/W	X	
5	ded	R/W	0h	
4	sec	R/W	0h	
3	global_safe_req	R/W	0h	
2	global_main_req	R/W	0h	
1	global_safe	R/W	0h	
0	global_main	R/W	0h	

6.2.6.91 DSS_L3_BANKA_BUS_SAFETY_ERR Register (Offset = 838h) [reset = 0h]

DSS_L3_BANKA_BUS_SAFETY_ERR is shown in Figure 6-611 and described in Table 6-617.

Return to the Summary Table.

Figure 6-611. DSS_L3_BANKA_BUS_SAFETY_ERR Register

31	30	29	28	27	26	25	24	23	22	21	20	19	18	17	16
ded								sec							
R-0h								R-0h							

Copyright © 2025 Texas Instruments Incorporated

Figure 6-611. DSS_L3_BANKA_BUS_SAFETY_ERR Register (continued)

15	14	13	12	11	10	9	8	7	6	5	4	3	2	1	0
comp_check								comp_err							
R-0h								R-0h							

Table 6-617. DSS_L3_BANKA_BUS_SAFETY_ERR Register Field Descriptions

Bit	Field	Type	Reset	Description
31-24	ded	R	0h	
23-16	sec	R	0h	
15-8	comp_check	R	0h	
7-0	comp_err	R	0h	

6.2.6.92 DSS_L3_BANKA_BUS_SAFETY_ERR_STAT_DATA0 Register (Offset = 83Ch) [reset = 0h]

DSS_L3_BANKA_BUS_SAFETY_ERR_STAT_DATA0 is shown in Figure 6-612 and described in Table 6-618.

Return to the Summary Table.

Figure 6-612. DSS_L3_BANKA_BUS_SAFETY_ERR_STAT_DATA0 Register

31	30	29	28	27	26	25	24	23	22	21	20	19	18	17	16	15	14	13	12	11	10	9	8	7	6	5	4	3	2	1	0
d3								d2								d1								d0							
R-0h								R-0h								R-0h								R-0h							

Table 6-618. DSS_L3_BANKA_BUS_SAFETY_ERR_STAT_DATA0 Register Field Descriptions

Bit	Field	Type	Reset	Description
31-24	d3	R	0h	
23-16	d2	R	0h	
15-8	d1	R	0h	
7-0	d0	R	0h	

6.2.6.93 DSS_L3_BANKA_BUS_SAFETY_ERR_STAT_DATA1 Register (Offset = 840h) [reset = 0h]

DSS_L3_BANKA_BUS_SAFETY_ERR_STAT_DATA1 is shown in Figure 6-613 and described in Table 6-619.

Return to the Summary Table.

Figure 6-613. DSS_L3_BANKA_BUS_SAFETY_ERR_STAT_DATA1 Register

31	30	29	28	27	26	25	24	23	22	21	20	19	18	17	16	15	14	13	12	11	10	9	8	7	6	5	4	3	2	1	0
d7								d6								d5								d4							
R-0h								R-0h								R-0h								R-0h							

Table 6-619. DSS_L3_BANKA_BUS_SAFETY_ERR_STAT_DATA1 Register Field Descriptions

Bit	Field	Type	Reset	Description
31-24	d7	R	0h	
23-16	d6	R	0h	
15-8	d5	R	0h	
7-0	d4	R	0h	

Copyright © 2025 Texas Instruments Incorporated

6.2.6.94 DSS_L3_BANKA_BUS_SAFETY_ERR_STAT_CMD Register (Offset = 844h) [reset = 0h]

DSS_L3_BANKA_BUS_SAFETY_ERR_STAT_CMD is shown in Figure 6-614 and described in Table 6-620.

Return to the Summary Table.

Figure 6-614. DSS_L3_BANKA_BUS_SAFETY_ERR_STAT_CMD Register

31	30	29	28	27	26	25	24	23	22	21	20	19	18	17	16	15	14	13	12	11	10	9	8	7	6	5	4	3	2	1	0
stat																															
R-0h																															

Table 6-620. DSS_L3_BANKA_BUS_SAFETY_ERR_STAT_CMD Register Field Descriptions

Bit	Field	Type	Reset	Description
31-0	stat	R	0h	

6.2.6.95 DSS_L3_BANKA_BUS_SAFETY_ERR_STAT_WRITE Register (Offset = 848h) [reset = 0h]

DSS_L3_BANKA_BUS_SAFETY_ERR_STAT_WRITE is shown in Figure 6-615 and described in Table 6-621.

Return to the Summary Table.

Figure 6-615. DSS_L3_BANKA_BUS_SAFETY_ERR_STAT_WRITE Register

31	30	29	28	27	26	25	24	23	22	21	20	19	18	17	16	15	14	13	12	11	10	9	8	7	6	5	4	3	2	1	0
stat																															
R-0h																															

Table 6-621. DSS_L3_BANKA_BUS_SAFETY_ERR_STAT_WRITE Register Field Descriptions

Bit	Field	Type	Reset	Description
31-0	stat	R	0h	

6.2.6.96 DSS_L3_BANKA_BUS_SAFETY_ERR_STAT_READ Register (Offset = 84Ch) [reset = 0h]

DSS_L3_BANKA_BUS_SAFETY_ERR_STAT_READ is shown in Figure 6-616 and described in Table 6-622.

Return to the Summary Table.

Figure 6-616. DSS_L3_BANKA_BUS_SAFETY_ERR_STAT_READ Register

31	30	29	28	27	26	25	24	23	22	21	20	19	18	17	16	15	14	13	12	11	10	9	8	7	6	5	4	3	2	1	0
stat																															
R-0h																															

Table 6-622. DSS_L3_BANKA_BUS_SAFETY_ERR_STAT_READ Register Field Descriptions

Bit	Field	Type	Reset	Description
31-0	stat	R	0h	

6.2.6.97 DSS_L3_BANKA_BUS_SAFETY_ERR_STAT_WRITERESP Register (Offset = 850h) [reset = 0h]

DSS_L3_BANKA_BUS_SAFETY_ERR_STAT_WRITERESP is shown in Figure 6-617 and described in Table 6-623.

Return to the Summary Table.

Figure 6-617. DSS_L3_BANKA_BUS_SAFETY_ERR_STAT_WRITERESP Register

31	30	29	28	27	26	25	24	23	22	21	20	19	18	17	16	15	14	13	12	11	10	9	8	7	6	5	4	3	2	1	0

Copyright © 2025 Texas Instruments Incorporated

Figure 6-617. DSS_L3_BANKA_BUS_SAFETY_ERR_STAT_WRITERESP Register (continued)

stat
R-0h

Table 6-623. DSS_L3_BANKA_BUS_SAFETY_ERR_STAT_WRITERESP Register Field Descriptions

Bit	Field	Type	Reset	Description
31-0	stat	R	0h	

6.2.6.98 DSS_L3_BANKB_BUS_SAFETY_CTRL Register (Offset = 854h) [reset = X]

DSS_L3_BANKB_BUS_SAFETY_CTRL is shown in Figure 6-618 and described in Table 6-624.

Return to the Summary Table.

Figure 6-618. DSS_L3_BANKB_BUS_SAFETY_CTRL Register

31	30	29	28	27	26	25	24
RESERVED							
R/W-X							
23	22	21	20	19	18	17	16
type							
R-1Fh							
15	14	13	12	11	10	9	8
RESERVED							err_clear
R/W-X							R/W-0h
7	6	5	4	3	2	1	0
RESERVED						enable	
R/W-X						R/W-7h	

Table 6-624. DSS_L3_BANKB_BUS_SAFETY_CTRL Register Field Descriptions

Bit	Field	Type	Reset	Description
31-24	RESERVED	R/W	X	
23-16	type	R	1Fh	
15-9	RESERVED	R/W	X	
8	err_clear	R/W	0h	
7-3	RESERVED	R/W	X	
2-0	enable	R/W	7h	

6.2.6.99 DSS_L3_BANKB_BUS_SAFETY_FI Register (Offset = 858h) [reset = X]

DSS_L3_BANKB_BUS_SAFETY_FI is shown in Figure 6-619 and described in Table 6-625.

Return to the Summary Table.

Figure 6-619. DSS_L3_BANKB_BUS_SAFETY_FI Register

31	30	29	28	27	26	25	24
safe							
R/W-0h							
23	22	21	20	19	18	17	16
main							

Copyright © 2025 Texas Instruments Incorporated

Figure 6-619. DSS_L3_BANKB_BUS_SAFETY_FI Register (continued)

R/W-0h							
15	14	13	12	11	10	9	8
data							
R/W-0h							
7	6	5	4	3	2	1	0
RESERVED		ded	sec	global_safe_req	global_main_req	global_safe	global_main
R/W-X		R/W-0h	R/W-0h	R/W-0h	R/W-0h	R/W-0h	R/W-0h

Table 6-625. DSS_L3_BANKB_BUS_SAFETY_FI Register Field Descriptions

Bit	Field	Type	Reset	Description
31-24	safe	R/W	0h	
23-16	main	R/W	0h	
15-8	data	R/W	0h	
7-6	RESERVED	R/W	X	
5	ded	R/W	0h	
4	sec	R/W	0h	
3	global_safe_req	R/W	0h	
2	global_main_req	R/W	0h	
1	global_safe	R/W	0h	
0	global_main	R/W	0h	

6.2.6.100 DSS_L3_BANKB_BUS_SAFETY_ERR Register (Offset = 85Ch) [reset = 0h]

DSS_L3_BANKB_BUS_SAFETY_ERR is shown in Figure 6-620 and described in Table 6-626.

Return to the Summary Table.

Figure 6-620. DSS_L3_BANKB_BUS_SAFETY_ERR Register

31	30	29	28	27	26	25	24	23	22	21	20	19	18	17	16
ded								sec							
R-0h								R-0h							
15	14	13	12	11	10	9	8	7	6	5	4	3	2	1	0
comp_check								comp_err							
R-0h								R-0h							

Table 6-626. DSS_L3_BANKB_BUS_SAFETY_ERR Register Field Descriptions

Bit	Field	Type	Reset	Description
31-24	ded	R	0h	
23-16	sec	R	0h	
15-8	comp_check	R	0h	
7-0	comp_err	R	0h	

6.2.6.101 DSS_L3_BANKB_BUS_SAFETY_ERR_STAT_DATA0 Register (Offset = 860h) [reset = 0h]

DSS_L3_BANKB_BUS_SAFETY_ERR_STAT_DATA0 is shown in Figure 6-621 and described in Table 6-627.

Return to the Summary Table.

Copyright © 2025 Texas Instruments Incorporated

Figure 6-621. DSS_L3_BANKB_BUS_SAFETY_ERR_STAT_DATA0 Register

31	30	29	28	27	26	25	24	23	22	21	20	19	18	17	16	15	14	13	12	11	10	9	8	7	6	5	4	3	2	1	0
d3								d2								d1								d0							
R-0h								R-0h								R-0h								R-0h							

Table 6-627. DSS_L3_BANKB_BUS_SAFETY_ERR_STAT_DATA0 Register Field Descriptions

Bit	Field	Type	Reset	Description
31-24	d3	R	0h	
23-16	d2	R	0h	
15-8	d1	R	0h	
7-0	d0	R	0h	

6.2.6.102 DSS_L3_BANKB_BUS_SAFETY_ERR_STAT_DATA1 Register (Offset = 864h) [reset = 0h]

DSS_L3_BANKB_BUS_SAFETY_ERR_STAT_DATA1 is shown in Figure 6-622 and described in Table 6-628.

Return to the Summary Table.

Figure 6-622. DSS_L3_BANKB_BUS_SAFETY_ERR_STAT_DATA1 Register

31	30	29	28	27	26	25	24	23	22	21	20	19	18	17	16	15	14	13	12	11	10	9	8	7	6	5	4	3	2	1	0
d7								d6								d5								d4							
R-0h								R-0h								R-0h								R-0h							

Table 6-628. DSS_L3_BANKB_BUS_SAFETY_ERR_STAT_DATA1 Register Field Descriptions

Bit	Field	Type	Reset	Description
31-24	d7	R	0h	
23-16	d6	R	0h	
15-8	d5	R	0h	
7-0	d4	R	0h	

6.2.6.103 DSS_L3_BANKB_BUS_SAFETY_ERR_STAT_CMD Register (Offset = 868h) [reset = 0h]

DSS_L3_BANKB_BUS_SAFETY_ERR_STAT_CMD is shown in Figure 6-623 and described in Table 6-629.

Return to the Summary Table.

Figure 6-623. DSS_L3_BANKB_BUS_SAFETY_ERR_STAT_CMD Register

31	30	29	28	27	26	25	24	23	22	21	20	19	18	17	16	15	14	13	12	11	10	9	8	7	6	5	4	3	2	1	0
stat																															
R-0h																															

Table 6-629. DSS_L3_BANKB_BUS_SAFETY_ERR_STAT_CMD Register Field Descriptions

Bit	Field	Type	Reset	Description
31-0	stat	R	0h	

6.2.6.104 DSS_L3_BANKB_BUS_SAFETY_ERR_STAT_WRITE Register (Offset = 86Ch) [reset = 0h]

DSS_L3_BANKB_BUS_SAFETY_ERR_STAT_WRITE is shown in Figure 6-624 and described in Table 6-630.

Return to the Summary Table.

Copyright © 2025 Texas Instruments Incorporated

Figure 6-624. DSS_L3_BANKB_BUS_SAFETY_ERR_STAT_WRITE Register

31	30	29	28	27	26	25	24	23	22	21	20	19	18	17	16	15	14	13	12	11	10	9	8	7	6	5	4	3	2	1	0
stat																															
R-0h																															

Table 6-630. DSS_L3_BANKB_BUS_SAFETY_ERR_STAT_WRITE Register Field Descriptions

Bit	Field	Type	Reset	Description
31-0	stat	R	0h	

6.2.6.105 DSS_L3_BANKB_BUS_SAFETY_ERR_STAT_READ Register (Offset = 870h) [reset = 0h]

DSS_L3_BANKB_BUS_SAFETY_ERR_STAT_READ is shown in Figure 6-625 and described in Table 6-631.

Return to the Summary Table.

Figure 6-625. DSS_L3_BANKB_BUS_SAFETY_ERR_STAT_READ Register

31	30	29	28	27	26	25	24	23	22	21	20	19	18	17	16	15	14	13	12	11	10	9	8	7	6	5	4	3	2	1	0
stat																															
R-0h																															

Table 6-631. DSS_L3_BANKB_BUS_SAFETY_ERR_STAT_READ Register Field Descriptions

Bit	Field	Type	Reset	Description
31-0	stat	R	0h	

6.2.6.106 DSS_L3_BANKB_BUS_SAFETY_ERR_STAT_WRITERESP Register (Offset = 874h) [reset = 0h]

DSS_L3_BANKB_BUS_SAFETY_ERR_STAT_WRITERESP is shown in Figure 6-626 and described in Table 6-632.

Return to the Summary Table.

Figure 6-626. DSS_L3_BANKB_BUS_SAFETY_ERR_STAT_WRITERESP Register

31	30	29	28	27	26	25	24	23	22	21	20	19	18	17	16	15	14	13	12	11	10	9	8	7	6	5	4	3	2	1	0
stat																															
R-0h																															

Table 6-632. DSS_L3_BANKB_BUS_SAFETY_ERR_STAT_WRITERESP Register Field Descriptions

Bit	Field	Type	Reset	Description
31-0	stat	R	0h	

6.2.6.107 DSS_L3_BANKC_BUS_SAFETY_CTRL Register (Offset = 878h) [reset = X]

DSS_L3_BANKC_BUS_SAFETY_CTRL is shown in Figure 6-627 and described in Table 6-633.

Return to the Summary Table.

Figure 6-627. DSS_L3_BANKC_BUS_SAFETY_CTRL Register

31	30	29	28	27	26	25	24
RESERVED							
R/W-X							
23	22	21	20	19	18	17	16
type							

Copyright © 2025 Texas Instruments Incorporated

Figure 6-627. DSS_L3_BANKC_BUS_SAFETY_CTRL Register (continued)

R-1Fh							
15	14	13	12	11	10	9	8
RESERVED							err_clear
R/W-X							R/W-0h
7	6	5	4	3	2	1	0
RESERVED						enable	
R/W-X						R/W-7h	

Table 6-633. DSS_L3_BANKC_BUS_SAFETY_CTRL Register Field Descriptions

Bit	Field	Type	Reset	Description
31-24	RESERVED	R/W	X	
23-16	type	R	1Fh	
15-9	RESERVED	R/W	X	
8	err_clear	R/W	0h	
7-3	RESERVED	R/W	X	
2-0	enable	R/W	7h	

6.2.6.108 DSS_L3_BANKC_BUS_SAFETY_FI Register (Offset = 87Ch) [reset = X]

DSS_L3_BANKC_BUS_SAFETY_FI is shown in Figure 6-628 and described in Table 6-634.

Return to the Summary Table.

Figure 6-628. DSS_L3_BANKC_BUS_SAFETY_FI Register

31	30	29	28	27	26	25	24
safe							
R/W-0h							
23	22	21	20	19	18	17	16
main							
R/W-0h							
15	14	13	12	11	10	9	8
data							
R/W-0h							
7	6	5	4	3	2	1	0
RESERVED		ded	sec	global_safe_req	global_main_req	global_safe	global_main
R/W-X		R/W-0h	R/W-0h	R/W-0h	R/W-0h	R/W-0h	R/W-0h

Table 6-634. DSS_L3_BANKC_BUS_SAFETY_FI Register Field Descriptions

Bit	Field	Type	Reset	Description
31-24	safe	R/W	0h	
23-16	main	R/W	0h	
15-8	data	R/W	0h	
7-6	RESERVED	R/W	X	
5	ded	R/W	0h	
4	sec	R/W	0h	
3	global_safe_req	R/W	0h	

Copyright © 2025 Texas Instruments Incorporated

Table 6-634. DSS_L3_BANKC_BUS_SAFETY_FI Register Field Descriptions (continued)

Bit	Field	Type	Reset	Description
2	global_main_req	R/W	0h	
1	global_safe	R/W	0h	
0	global_main	R/W	0h	

6.2.6.109 DSS_L3_BANKC_BUS_SAFETY_ERR Register (Offset = 880h) [reset = 0h]

DSS_L3_BANKC_BUS_SAFETY_ERR is shown in Figure 6-629 and described in Table 6-635.

Return to the Summary Table.

Figure 6-629. DSS_L3_BANKC_BUS_SAFETY_ERR Register

31	30	29	28	27	26	25	24	23	22	21	20	19	18	17	16
ded								sec							
R-0h								R-0h							
15	14	13	12	11	10	9	8	7	6	5	4	3	2	1	0
comp_check								comp_err							
R-0h								R-0h							

Table 6-635. DSS_L3_BANKC_BUS_SAFETY_ERR Register Field Descriptions

Bit	Field	Type	Reset	Description
31-24	ded	R	0h	
23-16	sec	R	0h	
15-8	comp_check	R	0h	
7-0	comp_err	R	0h	

6.2.6.110 DSS_L3_BANKC_BUS_SAFETY_ERR_STAT_DATA0 Register (Offset = 884h) [reset = 0h]

DSS_L3_BANKC_BUS_SAFETY_ERR_STAT_DATA0 is shown in Figure 6-630 and described in Table 6-636.

Return to the Summary Table.

Figure 6-630. DSS_L3_BANKC_BUS_SAFETY_ERR_STAT_DATA0 Register

31	30	29	28	27	26	25	24	23	22	21	20	19	18	17	16	15	14	13	12	11	10	9	8	7	6	5	4	3	2	1	0
d3								d2								d1								d0							
R-0h								R-0h								R-0h								R-0h							

Table 6-636. DSS_L3_BANKC_BUS_SAFETY_ERR_STAT_DATA0 Register Field Descriptions

Bit	Field	Type	Reset	Description
31-24	d3	R	0h	
23-16	d2	R	0h	
15-8	d1	R	0h	
7-0	d0	R	0h	

6.2.6.111 DSS_L3_BANKC_BUS_SAFETY_ERR_STAT_DATA1 Register (Offset = 888h) [reset = 0h]

DSS_L3_BANKC_BUS_SAFETY_ERR_STAT_DATA1 is shown in Figure 6-631 and described in Table 6-637.

Return to the Summary Table.

Copyright © 2025 Texas Instruments Incorporated

Figure 6-631. DSS_L3_BANKC_BUS_SAFETY_ERR_STAT_DATA1 Register

31	30	29	28	27	26	25	24	23	22	21	20	19	18	17	16	15	14	13	12	11	10	9	8	7	6	5	4	3	2	1	0
d7								d6								d5								d4							
R-0h								R-0h								R-0h								R-0h							

Table 6-637. DSS_L3_BANKC_BUS_SAFETY_ERR_STAT_DATA1 Register Field Descriptions

Bit	Field	Type	Reset	Description
31-24	d7	R	0h	
23-16	d6	R	0h	
15-8	d5	R	0h	
7-0	d4	R	0h	

6.2.6.112 DSS_L3_BANKC_BUS_SAFETY_ERR_STAT_CMD Register (Offset = 88Ch) [reset = 0h]

DSS_L3_BANKC_BUS_SAFETY_ERR_STAT_CMD is shown in Figure 6-632 and described in Table 6-638.

Return to the Summary Table.

Figure 6-632. DSS_L3_BANKC_BUS_SAFETY_ERR_STAT_CMD Register

31	30	29	28	27	26	25	24	23	22	21	20	19	18	17	16	15	14	13	12	11	10	9	8	7	6	5	4	3	2	1	0
stat																															
R-0h																															

Table 6-638. DSS_L3_BANKC_BUS_SAFETY_ERR_STAT_CMD Register Field Descriptions

Bit	Field	Type	Reset	Description
31-0	stat	R	0h	

6.2.6.113 DSS_L3_BANKC_BUS_SAFETY_ERR_STAT_WRITE Register (Offset = 890h) [reset = 0h]

DSS_L3_BANKC_BUS_SAFETY_ERR_STAT_WRITE is shown in Figure 6-633 and described in Table 6-639.

Return to the Summary Table.

Figure 6-633. DSS_L3_BANKC_BUS_SAFETY_ERR_STAT_WRITE Register

31	30	29	28	27	26	25	24	23	22	21	20	19	18	17	16	15	14	13	12	11	10	9	8	7	6	5	4	3	2	1	0
stat																															
R-0h																															

Table 6-639. DSS_L3_BANKC_BUS_SAFETY_ERR_STAT_WRITE Register Field Descriptions

Bit	Field	Type	Reset	Description
31-0	stat	R	0h	

6.2.6.114 DSS_L3_BANKC_BUS_SAFETY_ERR_STAT_READ Register (Offset = 894h) [reset = 0h]

DSS_L3_BANKC_BUS_SAFETY_ERR_STAT_READ is shown in Figure 6-634 and described in Table 6-640.

Return to the Summary Table.

Figure 6-634. DSS_L3_BANKC_BUS_SAFETY_ERR_STAT_READ Register

31	30	29	28	27	26	25	24	23	22	21	20	19	18	17	16	15	14	13	12	11	10	9	8	7	6	5	4	3	2	1	0
stat																															
R-0h																															

Copyright © 2025 Texas Instruments Incorporated

Figure 6-634. DSS_L3_BANKC_BUS_SAFETY_ERR_STAT_READ Register (continued)

Table 6-640. DSS_L3_BANKC_BUS_SAFETY_ERR_STAT_READ Register Field Descriptions

Bit	Field	Type	Reset	Description
31-0	stat	R	0h	

6.2.6.115 DSS_L3_BANKC_BUS_SAFETY_ERR_STAT_WRITERESP Register (Offset = 898h) [reset = 0h]

DSS_L3_BANKC_BUS_SAFETY_ERR_STAT_WRITERESP is shown in Figure 6-635 and described in Table 6-641.

Return to the Summary Table.

Figure 6-635. DSS_L3_BANKC_BUS_SAFETY_ERR_STAT_WRITERESP Register

31	30	29	28	27	26	25	24	23	22	21	20	19	18	17	16	15	14	13	12	11	10	9	8	7	6	5	4	3	2	1	0
stat																															
R-0h																															

Table 6-641. DSS_L3_BANKC_BUS_SAFETY_ERR_STAT_WRITERESP Register Field Descriptions

Bit	Field	Type	Reset	Description
31-0	stat	R	0h	

6.2.6.116 DSS_L3_BANKD_BUS_SAFETY_CTRL Register (Offset = 89Ch) [reset = X]

DSS_L3_BANKD_BUS_SAFETY_CTRL is shown in Figure 6-636 and described in Table 6-642.

Return to the Summary Table.

Figure 6-636. DSS_L3_BANKD_BUS_SAFETY_CTRL Register

31	30	29	28	27	26	25	24
RESERVED							
R/W-X							
23	22	21	20	19	18	17	16
type							
R-1Fh							
15	14	13	12	11	10	9	8
RESERVED							err_clear
R/W-X							R/W-0h
7	6	5	4	3	2	1	0
RESERVED						enable	
R/W-X						R/W-7h	

Table 6-642. DSS_L3_BANKD_BUS_SAFETY_CTRL Register Field Descriptions

Bit	Field	Type	Reset	Description
31-24	RESERVED	R/W	X	
23-16	type	R	1Fh	
15-9	RESERVED	R/W	X	
8	err_clear	R/W	0h	
7-3	RESERVED	R/W	X	

Copyright © 2025 Texas Instruments Incorporated

Table 6-642. DSS_L3_BANKD_BUS_SAFETY_CTRL Register Field Descriptions (continued)

Bit	Field	Type	Reset	Description
2-0	enable	R/W	7h	

6.2.6.117 DSS_L3_BANKD_BUS_SAFETY_FI Register (Offset = 8A0h) [reset = X]

DSS_L3_BANKD_BUS_SAFETY_FI is shown in Figure 6-637 and described in Table 6-643.

Return to the Summary Table.

Figure 6-637. DSS_L3_BANKD_BUS_SAFETY_FI Register

31	30	29	28	27	26	25	24
safe							
R/W-0h							
23	22	21	20	19	18	17	16
main							
R/W-0h							
15	14	13	12	11	10	9	8
data							
R/W-0h							
7	6	5	4	3	2	1	0
RESERVED		ded	sec	global_safe_req	global_main_req	global_safe	global_main
R/W-X		R/W-0h	R/W-0h	R/W-0h	R/W-0h	R/W-0h	R/W-0h

Table 6-643. DSS_L3_BANKD_BUS_SAFETY_FI Register Field Descriptions

Bit	Field	Type	Reset	Description
31-24	safe	R/W	0h	
23-16	main	R/W	0h	
15-8	data	R/W	0h	
7-6	RESERVED	R/W	X	
5	ded	R/W	0h	
4	sec	R/W	0h	
3	global_safe_req	R/W	0h	
2	global_main_req	R/W	0h	
1	global_safe	R/W	0h	
0	global_main	R/W	0h	

6.2.6.118 DSS_L3_BANKD_BUS_SAFETY_ERR Register (Offset = 8A4h) [reset = 0h]

DSS_L3_BANKD_BUS_SAFETY_ERR is shown in Figure 6-638 and described in Table 6-644.

Return to the Summary Table.

Figure 6-638. DSS_L3_BANKD_BUS_SAFETY_ERR Register

31	30	29	28	27	26	25	24	23	22	21	20	19	18	17	16
ded								sec							
R-0h								R-0h							
15	14	13	12	11	10	9	8	7	6	5	4	3	2	1	0

Copyright © 2025 Texas Instruments Incorporated

Figure 6-638. DSS_L3_BANKD_BUS_SAFETY_ERR Register (continued)

comp_check	comp_err
R-0h	R-0h

Table 6-644. DSS_L3_BANKD_BUS_SAFETY_ERR Register Field Descriptions

Bit	Field	Type	Reset	Description
31-24	ded	R	0h	
23-16	sec	R	0h	
15-8	comp_check	R	0h	
7-0	comp_err	R	0h	

6.2.6.119 DSS_L3_BANKD_BUS_SAFETY_ERR_STAT_DATA0 Register (Offset = 8A8h) [reset = 0h]

DSS_L3_BANKD_BUS_SAFETY_ERR_STAT_DATA0 is shown in Figure 6-639 and described in Table 6-645.

Return to the Summary Table.

Figure 6-639. DSS_L3_BANKD_BUS_SAFETY_ERR_STAT_DATA0 Register

31	30	29	28	27	26	25	24	23	22	21	20	19	18	17	16	15	14	13	12	11	10	9	8	7	6	5	4	3	2	1	0
d3								d2								d1								d0							
R-0h								R-0h								R-0h								R-0h							

Table 6-645. DSS_L3_BANKD_BUS_SAFETY_ERR_STAT_DATA0 Register Field Descriptions

Bit	Field	Type	Reset	Description
31-24	d3	R	0h	
23-16	d2	R	0h	
15-8	d1	R	0h	
7-0	d0	R	0h	

6.2.6.120 DSS_L3_BANKD_BUS_SAFETY_ERR_STAT_DATA1 Register (Offset = 8ACh) [reset = 0h]

DSS_L3_BANKD_BUS_SAFETY_ERR_STAT_DATA1 is shown in Figure 6-640 and described in Table 6-646.

Return to the Summary Table.

Figure 6-640. DSS_L3_BANKD_BUS_SAFETY_ERR_STAT_DATA1 Register

31	30	29	28	27	26	25	24	23	22	21	20	19	18	17	16	15	14	13	12	11	10	9	8	7	6	5	4	3	2	1	0
d7								d6								d5								d4							
R-0h								R-0h								R-0h								R-0h							

Table 6-646. DSS_L3_BANKD_BUS_SAFETY_ERR_STAT_DATA1 Register Field Descriptions

Bit	Field	Type	Reset	Description
31-24	d7	R	0h	
23-16	d6	R	0h	
15-8	d5	R	0h	
7-0	d4	R	0h	

6.2.6.121 DSS_L3_BANKD_BUS_SAFETY_ERR_STAT_CMD Register (Offset = 8B0h) [reset = 0h]

DSS_L3_BANKD_BUS_SAFETY_ERR_STAT_CMD is shown in Figure 6-641 and described in Table 6-647.

Copyright © 2025 Texas Instruments Incorporated

Return to the Summary Table.

Figure 6-641. DSS_L3_BANKD_BUS_SAFETY_ERR_STAT_CMD Register

31	30	29	28	27	26	25	24	23	22	21	20	19	18	17	16	15	14	13	12	11	10	9	8	7	6	5	4	3	2	1	0
stat																															
R-0h																															

Table 6-647. DSS_L3_BANKD_BUS_SAFETY_ERR_STAT_CMD Register Field Descriptions

Bit	Field	Type	Reset	Description
31-0	stat	R	0h	

6.2.6.122 DSS_L3_BANKD_BUS_SAFETY_ERR_STAT_WRITE Register (Offset = 8B4h) [reset = 0h]

DSS_L3_BANKD_BUS_SAFETY_ERR_STAT_WRITE is shown in Figure 6-642 and described in Table 6-648.

Return to the Summary Table.

Figure 6-642. DSS_L3_BANKD_BUS_SAFETY_ERR_STAT_WRITE Register

31	30	29	28	27	26	25	24	23	22	21	20	19	18	17	16	15	14	13	12	11	10	9	8	7	6	5	4	3	2	1	0
stat																															
R-0h																															

Table 6-648. DSS_L3_BANKD_BUS_SAFETY_ERR_STAT_WRITE Register Field Descriptions

Bit	Field	Type	Reset	Description
31-0	stat	R	0h	

6.2.6.123 DSS_L3_BANKD_BUS_SAFETY_ERR_STAT_READ Register (Offset = 8B8h) [reset = 0h]

DSS_L3_BANKD_BUS_SAFETY_ERR_STAT_READ is shown in Figure 6-643 and described in Table 6-649.

Return to the Summary Table.

Figure 6-643. DSS_L3_BANKD_BUS_SAFETY_ERR_STAT_READ Register

31	30	29	28	27	26	25	24	23	22	21	20	19	18	17	16	15	14	13	12	11	10	9	8	7	6	5	4	3	2	1	0
stat																															
R-0h																															

Table 6-649. DSS_L3_BANKD_BUS_SAFETY_ERR_STAT_READ Register Field Descriptions

Bit	Field	Type	Reset	Description
31-0	stat	R	0h	

6.2.6.124 DSS_L3_BANKD_BUS_SAFETY_ERR_STAT_WRITERESP Register (Offset = 8BCh) [reset = 0h]

DSS_L3_BANKD_BUS_SAFETY_ERR_STAT_WRITERESP is shown in Figure 6-644 and described in Table 6-650.

Return to the Summary Table.

Figure 6-644. DSS_L3_BANKD_BUS_SAFETY_ERR_STAT_WRITERESP Register

31	30	29	28	27	26	25	24	23	22	21	20	19	18	17	16	15	14	13	12	11	10	9	8	7	6	5	4	3	2	1	0
stat																															
R-0h																															

Copyright © 2025 Texas Instruments Incorporated

Table 6-650. DSS_L3_BANKD_BUS_SAFETY_ERR_STAT_WRITERESP Register Field Descriptions

Bit	Field	Type	Reset	Description
31-0	stat	R	0h	

6.2.6.125 DSS_DSP_SDMA_BUS_SAFETY_CTRL Register (Offset = 8C0h) [reset = X]

DSS_DSP_SDMA_BUS_SAFETY_CTRL is shown in Figure 6-645 and described in Table 6-651.

Return to the Summary Table.

Figure 6-645. DSS_DSP_SDMA_BUS_SAFETY_CTRL Register

31	30	29	28	27	26	25	24
RESERVED							
R/W-X							
23	22	21	20	19	18	17	16
type							
R-Fh							
15	14	13	12	11	10	9	8
RESERVED							err_clear
R/W-X							R/W-0h
7	6	5	4	3	2	1	0
RESERVED						enable	
R/W-X						R/W-7h	

Table 6-651. DSS_DSP_SDMA_BUS_SAFETY_CTRL Register Field Descriptions

Bit	Field	Type	Reset	Description
31-24	RESERVED	R/W	X	
23-16	type	R	Fh	
15-9	RESERVED	R/W	X	
8	err_clear	R/W	0h	
7-3	RESERVED	R/W	X	
2-0	enable	R/W	7h	

6.2.6.126 DSS_DSP_SDMA_BUS_SAFETY_FI Register (Offset = 8C4h) [reset = X]

DSS_DSP_SDMA_BUS_SAFETY_FI is shown in Figure 6-646 and described in Table 6-652.

Return to the Summary Table.

Figure 6-646. DSS_DSP_SDMA_BUS_SAFETY_FI Register

31	30	29	28	27	26	25	24
safe							
R/W-0h							
23	22	21	20	19	18	17	16
main							
R/W-0h							
15	14	13	12	11	10	9	8
data							
R/W-0h							

Copyright © 2025 Texas Instruments Incorporated

Figure 6-646. DSS_DSP_SDMA_BUS_SAFETY_FI Register (continued)

7	6	5	4	3	2	1	0
RESERVED		ded	sec	global_safe_req	global_main_req	global_safe	global_main
R/W-X		R/W-0h	R/W-0h	R/W-0h	R/W-0h	R/W-0h	R/W-0h

Table 6-652. DSS_DSP_SDMA_BUS_SAFETY_FI Register Field Descriptions

Bit	Field	Type	Reset	Description
31-24	safe	R/W	0h	
23-16	main	R/W	0h	
15-8	data	R/W	0h	
7-6	RESERVED	R/W	X	
5	ded	R/W	0h	
4	sec	R/W	0h	
3	global_safe_req	R/W	0h	
2	global_main_req	R/W	0h	
1	global_safe	R/W	0h	
0	global_main	R/W	0h	

6.2.6.127 DSS_DSP_SDMA_BUS_SAFETY_ERR Register (Offset = 8C8h) [reset = 0h]

DSS_DSP_SDMA_BUS_SAFETY_ERR is shown in Figure 6-647 and described in Table 6-653.

Return to the Summary Table.

Figure 6-647. DSS_DSP_SDMA_BUS_SAFETY_ERR Register

31	30	29	28	27	26	25	24	23	22	21	20	19	18	17	16
ded								sec							
R-0h								R-0h							
15	14	13	12	11	10	9	8	7	6	5	4	3	2	1	0
comp_check								comp_err							
R-0h								R-0h							

Table 6-653. DSS_DSP_SDMA_BUS_SAFETY_ERR Register Field Descriptions

Bit	Field	Type	Reset	Description
31-24	ded	R	0h	
23-16	sec	R	0h	
15-8	comp_check	R	0h	
7-0	comp_err	R	0h	

6.2.6.128 DSS_DSP_SDMA_BUS_SAFETY_ERR_STAT_DATA0 Register (Offset = 8CCh) [reset = 0h]

DSS_DSP_SDMA_BUS_SAFETY_ERR_STAT_DATA0 is shown in Figure 6-648 and described in Table 6-654.

Return to the Summary Table.

Figure 6-648. DSS_DSP_SDMA_BUS_SAFETY_ERR_STAT_DATA0 Register

31	30	29	28	27	26	25	24	23	22	21	20	19	18	17	16	15	14	13	12	11	10	9	8	7	6	5	4	3	2	1	0
d3								d2								d1								d0							
R-0h								R-0h								R-0h								R-0h							

Copyright © 2025 Texas Instruments Incorporated

Table 6-654. DSS_DSP_SDMA_BUS_SAFETY_ERR_STAT_DATA0 Register Field Descriptions

Bit	Field	Type	Reset	Description
31-24	d3	R	0h	
23-16	d2	R	0h	
15-8	d1	R	0h	
7-0	d0	R	0h	

6.2.6.129 DSS_DSP_SDMA_BUS_SAFETY_ERR_STAT_CMD Register (Offset = 8D0h) [reset = 0h]

DSS_DSP_SDMA_BUS_SAFETY_ERR_STAT_CMD is shown in Figure 6-649 and described in Table 6-655.

Return to the Summary Table.

Figure 6-649. DSS_DSP_SDMA_BUS_SAFETY_ERR_STAT_CMD Register

31	30	29	28	27	26	25	24	23	22	21	20	19	18	17	16	15	14	13	12	11	10	9	8	7	6	5	4	3	2	1	0
stat																															
R-0h																															

Table 6-655. DSS_DSP_SDMA_BUS_SAFETY_ERR_STAT_CMD Register Field Descriptions

Bit	Field	Type	Reset	Description
31-0	stat	R	0h	

6.2.6.130 DSS_DSP_SDMA_BUS_SAFETY_ERR_STAT_WRITE Register (Offset = 8D4h) [reset = 0h]

DSS_DSP_SDMA_BUS_SAFETY_ERR_STAT_WRITE is shown in Figure 6-650 and described in Table 6-656.

Return to the Summary Table.

Figure 6-650. DSS_DSP_SDMA_BUS_SAFETY_ERR_STAT_WRITE Register

31	30	29	28	27	26	25	24	23	22	21	20	19	18	17	16	15	14	13	12	11	10	9	8	7	6	5	4	3	2	1	0
stat																															
R-0h																															

Table 6-656. DSS_DSP_SDMA_BUS_SAFETY_ERR_STAT_WRITE Register Field Descriptions

Bit	Field	Type	Reset	Description
31-0	stat	R	0h	

6.2.6.131 DSS_DSP_SDMA_BUS_SAFETY_ERR_STAT_READ Register (Offset = 8D8h) [reset = 0h]

DSS_DSP_SDMA_BUS_SAFETY_ERR_STAT_READ is shown in Figure 6-651 and described in Table 6-657.

Return to the Summary Table.

Figure 6-651. DSS_DSP_SDMA_BUS_SAFETY_ERR_STAT_READ Register

31	30	29	28	27	26	25	24	23	22	21	20	19	18	17	16	15	14	13	12	11	10	9	8	7	6	5	4	3	2	1	0
stat																															
R-0h																															

Table 6-657. DSS_DSP_SDMA_BUS_SAFETY_ERR_STAT_READ Register Field Descriptions

Bit	Field	Type	Reset	Description
31-0	stat	R	0h	

Copyright © 2025 Texas Instruments Incorporated

6.2.6.132 DSS_DSP_SDMA_BUS_SAFETY_ERR_STAT_WRITERESP Register (Offset = 8DCh) [reset = 0h]

DSS_DSP_SDMA_BUS_SAFETY_ERR_STAT_WRITERESP is shown in Figure 6-652 and described in Table 6-658.

Return to the Summary Table.

Figure 6-652. DSS_DSP_SDMA_BUS_SAFETY_ERR_STAT_WRITERESP Register

31	30	29	28	27	26	25	24	23	22	21	20	19	18	17	16	15	14	13	12	11	10	9	8	7	6	5	4	3	2	1	0
stat																															
R-0h																															

Table 6-658. DSS_DSP_SDMA_BUS_SAFETY_ERR_STAT_WRITERESP Register Field Descriptions

Bit	Field	Type	Reset	Description
31-0	stat	R	0h	

6.2.6.133 DSS_TPTC_A0_RD_BUS_SAFETY_CTRL Register (Offset = 8E0h) [reset = X]

DSS_TPTC_A0_RD_BUS_SAFETY_CTRL is shown in Figure 6-653 and described in Table 6-659.

Return to the Summary Table.

Figure 6-653. DSS_TPTC_A0_RD_BUS_SAFETY_CTRL Register

31	30	29	28	27	26	25	24
RESERVED							
R/W-X							
23	22	21	20	19	18	17	16
type							
R-9h							
15	14	13	12	11	10	9	8
RESERVED							err_clear
R/W-X							R/W-0h
7	6	5	4	3	2	1	0
RESERVED						enable	
R/W-X						R/W-7h	

Table 6-659. DSS_TPTC_A0_RD_BUS_SAFETY_CTRL Register Field Descriptions

Bit	Field	Type	Reset	Description
31-24	RESERVED	R/W	X	
23-16	type	R	9h	
15-9	RESERVED	R/W	X	
8	err_clear	R/W	0h	
7-3	RESERVED	R/W	X	
2-0	enable	R/W	7h	

6.2.6.134 DSS_TPTC_A0_RD_BUS_SAFETY_FI Register (Offset = 8E4h) [reset = X]

DSS_TPTC_A0_RD_BUS_SAFETY_FI is shown in Figure 6-654 and described in Table 6-660.

Return to the Summary Table.

Copyright © 2025 Texas Instruments Incorporated

Figure 6-654. DSS_TPTC_A0_RD_BUS_SAFETY_FI Register

31	30	29	28	27	26	25	24
safe							
R/W-0h							
23	22	21	20	19	18	17	16
main							
R/W-0h							
15	14	13	12	11	10	9	8
data							
R/W-0h							
7	6	5	4	3	2	1	0
RESERVED		ded	sec	global_safe_req	global_main_req	global_safe	global_main
R/W-X		R/W-0h	R/W-0h	R/W-0h	R/W-0h	R/W-0h	R/W-0h

Table 6-660. DSS_TPTC_A0_RD_BUS_SAFETY_FI Register Field Descriptions

Bit	Field	Type	Reset	Description
31-24	safe	R/W	0h	
23-16	main	R/W	0h	
15-8	data	R/W	0h	
7-6	RESERVED	R/W	X	
5	ded	R/W	0h	
4	sec	R/W	0h	
3	global_safe_req	R/W	0h	
2	global_main_req	R/W	0h	
1	global_safe	R/W	0h	
0	global_main	R/W	0h	

6.2.6.135 DSS_TPTC_A0_RD_BUS_SAFETY_ERR Register (Offset = 8E8h) [reset = 0h]

DSS_TPTC_A0_RD_BUS_SAFETY_ERR is shown in Figure 6-655 and described in Table 6-661.

Return to the Summary Table.

Figure 6-655. DSS_TPTC_A0_RD_BUS_SAFETY_ERR Register

31	30	29	28	27	26	25	24	23	22	21	20	19	18	17	16
ded								sec							
R-0h								R-0h							
15	14	13	12	11	10	9	8	7	6	5	4	3	2	1	0
comp_check								comp_err							
R-0h								R-0h							

Table 6-661. DSS_TPTC_A0_RD_BUS_SAFETY_ERR Register Field Descriptions

Bit	Field	Type	Reset	Description
31-24	ded	R	0h	
23-16	sec	R	0h	
15-8	comp_check	R	0h	

Copyright © 2025 Texas Instruments Incorporated

Table 6-661. DSS_TPTC_A0_RD_BUS_SAFETY_ERR Register Field Descriptions (continued)

Bit	Field	Type	Reset	Description
7-0	comp_err	R	0h	

6.2.6.136 DSS_TPTC_A0_RD_BUS_SAFETY_ERR_STAT_DATA0 Register (Offset = 8ECh) [reset = 0h]

DSS_TPTC_A0_RD_BUS_SAFETY_ERR_STAT_DATA0 is shown in Figure 6-656 and described in Table 6-662.

Return to the Summary Table.

Figure 6-656. DSS_TPTC_A0_RD_BUS_SAFETY_ERR_STAT_DATA0 Register

31	30	29	28	27	26	25	24	23	22	21	20	19	18	17	16	15	14	13	12	11	10	9	8	7	6	5	4	3	2	1	0
d3								d2								d1								d0							
R-0h								R-0h								R-0h								R-0h							

Table 6-662. DSS_TPTC_A0_RD_BUS_SAFETY_ERR_STAT_DATA0 Register Field Descriptions

Bit	Field	Type	Reset	Description
31-24	d3	R	0h	
23-16	d2	R	0h	
15-8	d1	R	0h	
7-0	d0	R	0h	

6.2.6.137 DSS_TPTC_A0_RD_BUS_SAFETY_ERR_STAT_CMD Register (Offset = 8F0h) [reset = 0h]

DSS_TPTC_A0_RD_BUS_SAFETY_ERR_STAT_CMD is shown in Figure 6-657 and described in Table 6-663.

Return to the Summary Table.

Figure 6-657. DSS_TPTC_A0_RD_BUS_SAFETY_ERR_STAT_CMD Register

31	30	29	28	27	26	25	24	23	22	21	20	19	18	17	16	15	14	13	12	11	10	9	8	7	6	5	4	3	2	1	0
stat																															
R-0h																															

Table 6-663. DSS_TPTC_A0_RD_BUS_SAFETY_ERR_STAT_CMD Register Field Descriptions

Bit	Field	Type	Reset	Description
31-0	stat	R	0h	

6.2.6.138 DSS_TPTC_A0_RD_BUS_SAFETY_ERR_STAT_READ Register (Offset = 8F4h) [reset = 0h]

DSS_TPTC_A0_RD_BUS_SAFETY_ERR_STAT_READ is shown in Figure 6-658 and described in Table 6-664.

Return to the Summary Table.

Figure 6-658. DSS_TPTC_A0_RD_BUS_SAFETY_ERR_STAT_READ Register

31	30	29	28	27	26	25	24	23	22	21	20	19	18	17	16	15	14	13	12	11	10	9	8	7	6	5	4	3	2	1	0
stat																															
R-0h																															

Table 6-664. DSS_TPTC_A0_RD_BUS_SAFETY_ERR_STAT_READ Register Field Descriptions

Bit	Field	Type	Reset	Description
31-0	stat	R	0h	

Copyright © 2025 Texas Instruments Incorporated

6.2.6.139 DSS_TPTC_A1_RD_BUS_SAFETY_CTRL Register (Offset = 8F8h) [reset = X]

DSS_TPTC_A1_RD_BUS_SAFETY_CTRL is shown in Figure 6-659 and described in Table 6-665.

Return to the Summary Table.

Figure 6-659. DSS_TPTC_A1_RD_BUS_SAFETY_CTRL Register

31	30	29	28	27	26	25	24
RESERVED							
R/W-X							
23	22	21	20	19	18	17	16
type							
R-9h							
15	14	13	12	11	10	9	8
RESERVED							err_clear
R/W-X							R/W-0h
7	6	5	4	3	2	1	0
RESERVED						enable	
R/W-X						R/W-7h	

Table 6-665. DSS_TPTC_A1_RD_BUS_SAFETY_CTRL Register Field Descriptions

Bit	Field	Type	Reset	Description
31-24	RESERVED	R/W	X	
23-16	type	R	9h	
15-9	RESERVED	R/W	X	
8	err_clear	R/W	0h	
7-3	RESERVED	R/W	X	
2-0	enable	R/W	7h	

6.2.6.140 DSS_TPTC_A1_RD_BUS_SAFETY_FI Register (Offset = 8FCh) [reset = X]

DSS_TPTC_A1_RD_BUS_SAFETY_FI is shown in Figure 6-660 and described in Table 6-666.

Return to the Summary Table.

Figure 6-660. DSS_TPTC_A1_RD_BUS_SAFETY_FI Register

31	30	29	28	27	26	25	24
safe							
R/W-0h							
23	22	21	20	19	18	17	16
main							
R/W-0h							
15	14	13	12	11	10	9	8
data							
R/W-0h							
7	6	5	4	3	2	1	0
RESERVED		ded	sec	global_safe_req	global_main_req	global_safe	global_main
R/W-X		R/W-0h	R/W-0h	R/W-0h	R/W-0h	R/W-0h	R/W-0h

Copyright © 2025 Texas Instruments Incorporated

Figure 6-660. DSS_TPTC_A1_RD_BUS_SAFETY_FI Register (continued)

Table 6-666. DSS_TPTC_A1_RD_BUS_SAFETY_FI Register Field Descriptions

Bit	Field	Type	Reset	Description
31-24	safe	R/W	0h	
23-16	main	R/W	0h	
15-8	data	R/W	0h	
7-6	RESERVED	R/W	X	
5	ded	R/W	0h	
4	sec	R/W	0h	
3	global_safe_req	R/W	0h	
2	global_main_req	R/W	0h	
1	global_safe	R/W	0h	
0	global_main	R/W	0h	

6.2.6.141 DSS_TPTC_A1_RD_BUS_SAFETY_ERR Register (Offset = 900h) [reset = 0h]

DSS_TPTC_A1_RD_BUS_SAFETY_ERR is shown in Figure 6-661 and described in Table 6-667.

Return to the Summary Table.

Figure 6-661. DSS_TPTC_A1_RD_BUS_SAFETY_ERR Register

31	30	29	28	27	26	25	24	23	22	21	20	19	18	17	16
ded								sec							
R-0h								R-0h							
15	14	13	12	11	10	9	8	7	6	5	4	3	2	1	0
comp_check								comp_err							
R-0h								R-0h							

Table 6-667. DSS_TPTC_A1_RD_BUS_SAFETY_ERR Register Field Descriptions

Bit	Field	Type	Reset	Description
31-24	ded	R	0h	
23-16	sec	R	0h	
15-8	comp_check	R	0h	
7-0	comp_err	R	0h	

6.2.6.142 DSS_TPTC_A1_RD_BUS_SAFETY_ERR_STAT_DATA0 Register (Offset = 904h) [reset = 0h]

DSS_TPTC_A1_RD_BUS_SAFETY_ERR_STAT_DATA0 is shown in Figure 6-662 and described in Table 6-668.

Return to the Summary Table.

Figure 6-662. DSS_TPTC_A1_RD_BUS_SAFETY_ERR_STAT_DATA0 Register

31	30	29	28	27	26	25	24	23	22	21	20	19	18	17	16	15	14	13	12	11	10	9	8	7	6	5	4	3	2	1	0
d3								d2								d1								d0							
R-0h								R-0h								R-0h								R-0h							

Copyright © 2025 Texas Instruments Incorporated

Table 6-668. DSS_TPTC_A1_RD_BUS_SAFETY_ERR_STAT_DATA0 Register Field Descriptions

Bit	Field	Type	Reset	Description
31-24	d3	R	0h	
23-16	d2	R	0h	
15-8	d1	R	0h	
7-0	d0	R	0h	

6.2.6.143 DSS_TPTC_A1_RD_BUS_SAFETY_ERR_STAT_CMD Register (Offset = 908h) [reset = 0h]

DSS_TPTC_A1_RD_BUS_SAFETY_ERR_STAT_CMD is shown in Figure 6-663 and described in Table 6-669.

Return to the Summary Table.

Figure 6-663. DSS_TPTC_A1_RD_BUS_SAFETY_ERR_STAT_CMD Register

31	30	29	28	27	26	25	24	23	22	21	20	19	18	17	16	15	14	13	12	11	10	9	8	7	6	5	4	3	2	1	0
stat																															
R-0h																															

Table 6-669. DSS_TPTC_A1_RD_BUS_SAFETY_ERR_STAT_CMD Register Field Descriptions

Bit	Field	Type	Reset	Description
31-0	stat	R	0h	

6.2.6.144 DSS_TPTC_A1_RD_BUS_SAFETY_ERR_STAT_READ Register (Offset = 90Ch) [reset = 0h]

DSS_TPTC_A1_RD_BUS_SAFETY_ERR_STAT_READ is shown in Figure 6-664 and described in Table 6-670.

Return to the Summary Table.

Figure 6-664. DSS_TPTC_A1_RD_BUS_SAFETY_ERR_STAT_READ Register

31	30	29	28	27	26	25	24	23	22	21	20	19	18	17	16	15	14	13	12	11	10	9	8	7	6	5	4	3	2	1	0
stat																															
R-0h																															

Table 6-670. DSS_TPTC_A1_RD_BUS_SAFETY_ERR_STAT_READ Register Field Descriptions

Bit	Field	Type	Reset	Description
31-0	stat	R	0h	

6.2.6.145 DSS_TPTC_B0_RD_BUS_SAFETY_CTRL Register (Offset = 910h) [reset = X]

DSS_TPTC_B0_RD_BUS_SAFETY_CTRL is shown in Figure 6-665 and described in Table 6-671.

Return to the Summary Table.

Figure 6-665. DSS_TPTC_B0_RD_BUS_SAFETY_CTRL Register

31	30	29	28	27	26	25	24
RESERVED							
R/W-X							
23	22	21	20	19	18	17	16
type							
R-9h							
15	14	13	12	11	10	9	8

Copyright © 2025 Texas Instruments Incorporated

Figure 6-665. DSS_TPTC_B0_RD_BUS_SAFETY_CTRL Register (continued)

RESERVED							err_clear
R/W-X							R/W-0h
7	6	5	4	3	2	1	0
RESERVED						enable	
R/W-X						R/W-7h	

Table 6-671. DSS_TPTC_B0_RD_BUS_SAFETY_CTRL Register Field Descriptions

Bit	Field	Type	Reset	Description
31-24	RESERVED	R/W	X	
23-16	type	R	9h	
15-9	RESERVED	R/W	X	
8	err_clear	R/W	0h	
7-3	RESERVED	R/W	X	
2-0	enable	R/W	7h	

6.2.6.146 DSS_TPTC_B0_RD_BUS_SAFETY_FI Register (Offset = 914h) [reset = X]

DSS_TPTC_B0_RD_BUS_SAFETY_FI is shown in Figure 6-666 and described in Table 6-672.

Return to the Summary Table.

Figure 6-666. DSS_TPTC_B0_RD_BUS_SAFETY_FI Register

31	30	29	28	27	26	25	24
safe							
R/W-0h							
23	22	21	20	19	18	17	16
main							
R/W-0h							
15	14	13	12	11	10	9	8
data							
R/W-0h							
7	6	5	4	3	2	1	0
RESERVED		ded	sec	global_safe_req	global_main_req	global_safe	global_main
R/W-X		R/W-0h	R/W-0h	R/W-0h	R/W-0h	R/W-0h	R/W-0h

Table 6-672. DSS_TPTC_B0_RD_BUS_SAFETY_FI Register Field Descriptions

Bit	Field	Type	Reset	Description
31-24	safe	R/W	0h	
23-16	main	R/W	0h	
15-8	data	R/W	0h	
7-6	RESERVED	R/W	X	
5	ded	R/W	0h	
4	sec	R/W	0h	
3	global_safe_req	R/W	0h	
2	global_main_req	R/W	0h	
1	global_safe	R/W	0h	

Copyright © 2025 Texas Instruments Incorporated

Table 6-672. DSS_TPTC_B0_RD_BUS_SAFETY_FI Register Field Descriptions (continued)

Bit	Field	Type	Reset	Description
0	global_main	R/W	0h	

6.2.6.147 DSS_TPTC_B0_RD_BUS_SAFETY_ERR Register (Offset = 918h) [reset = 0h]

DSS_TPTC_B0_RD_BUS_SAFETY_ERR is shown in Figure 6-667 and described in Table 6-673.

Return to the Summary Table.

Figure 6-667. DSS_TPTC_B0_RD_BUS_SAFETY_ERR Register

31	30	29	28	27	26	25	24	23	22	21	20	19	18	17	16
ded								sec							
R-0h								R-0h							
15	14	13	12	11	10	9	8	7	6	5	4	3	2	1	0
comp_check								comp_err							
R-0h								R-0h							

Table 6-673. DSS_TPTC_B0_RD_BUS_SAFETY_ERR Register Field Descriptions

Bit	Field	Type	Reset	Description
31-24	ded	R	0h	
23-16	sec	R	0h	
15-8	comp_check	R	0h	
7-0	comp_err	R	0h	

6.2.6.148 DSS_TPTC_B0_RD_BUS_SAFETY_ERR_STAT_DATA0 Register (Offset = 91Ch) [reset = 0h]

DSS_TPTC_B0_RD_BUS_SAFETY_ERR_STAT_DATA0 is shown in Figure 6-668 and described in Table 6-674.

Return to the Summary Table.

Figure 6-668. DSS_TPTC_B0_RD_BUS_SAFETY_ERR_STAT_DATA0 Register

31	30	29	28	27	26	25	24	23	22	21	20	19	18	17	16	15	14	13	12	11	10	9	8	7	6	5	4	3	2	1	0
d3								d2								d1								d0							
R-0h								R-0h								R-0h								R-0h							

Table 6-674. DSS_TPTC_B0_RD_BUS_SAFETY_ERR_STAT_DATA0 Register Field Descriptions

Bit	Field	Type	Reset	Description
31-24	d3	R	0h	
23-16	d2	R	0h	
15-8	d1	R	0h	
7-0	d0	R	0h	

6.2.6.149 DSS_TPTC_B0_RD_BUS_SAFETY_ERR_STAT_CMD Register (Offset = 920h) [reset = 0h]

DSS_TPTC_B0_RD_BUS_SAFETY_ERR_STAT_CMD is shown in Figure 6-669 and described in Table 6-675.

Return to the Summary Table.

Figure 6-669. DSS_TPTC_B0_RD_BUS_SAFETY_ERR_STAT_CMD Register

31	30	29	28	27	26	25	24	23	22	21	20	19	18	17	16	15	14	13	12	11	10	9	8	7	6	5	4	3	2	1	0

Copyright © 2025 Texas Instruments Incorporated

Figure 6-669. DSS_TPTC_B0_RD_BUS_SAFETY_ERR_STAT_CMD Register (continued)

stat
R-0h

Table 6-675. DSS_TPTC_B0_RD_BUS_SAFETY_ERR_STAT_CMD Register Field Descriptions

Bit	Field	Type	Reset	Description
31-0	stat	R	0h	

6.2.6.150 DSS_TPTC_B0_RD_BUS_SAFETY_ERR_STAT_READ Register (Offset = 924h) [reset = 0h]

DSS_TPTC_B0_RD_BUS_SAFETY_ERR_STAT_READ is shown in Figure 6-670 and described in Table 6-676.

Return to the Summary Table.

Figure 6-670. DSS_TPTC_B0_RD_BUS_SAFETY_ERR_STAT_READ Register

31	30	29	28	27	26	25	24	23	22	21	20	19	18	17	16	15	14	13	12	11	10	9	8	7	6	5	4	3	2	1	0
stat																															
R-0h																															

Table 6-676. DSS_TPTC_B0_RD_BUS_SAFETY_ERR_STAT_READ Register Field Descriptions

Bit	Field	Type	Reset	Description
31-0	stat	R	0h	

6.2.6.151 DSS_TPTC_B1_RD_BUS_SAFETY_CTRL Register (Offset = 928h) [reset = X]

DSS_TPTC_B1_RD_BUS_SAFETY_CTRL is shown in Figure 6-671 and described in Table 6-677.

Return to the Summary Table.

Figure 6-671. DSS_TPTC_B1_RD_BUS_SAFETY_CTRL Register

31	30	29	28	27	26	25	24
RESERVED							
R/W-X							
23	22	21	20	19	18	17	16
type							
R-9h							
15	14	13	12	11	10	9	8
RESERVED							err_clear
R/W-X							R/W-0h
7	6	5	4	3	2	1	0
RESERVED						enable	
R/W-X						R/W-7h	

Table 6-677. DSS_TPTC_B1_RD_BUS_SAFETY_CTRL Register Field Descriptions

Bit	Field	Type	Reset	Description
31-24	RESERVED	R/W	X	
23-16	type	R	9h	
15-9	RESERVED	R/W	X	
8	err_clear	R/W	0h	
7-3	RESERVED	R/W	X	

Copyright © 2025 Texas Instruments Incorporated

Table 6-677. DSS_TPTC_B1_RD_BUS_SAFETY_CTRL Register Field Descriptions (continued)

Bit	Field	Type	Reset	Description
2-0	enable	R/W	7h	

6.2.6.152 DSS_TPTC_B1_RD_BUS_SAFETY_FI Register (Offset = 92Ch) [reset = X]

DSS_TPTC_B1_RD_BUS_SAFETY_FI is shown in Figure 6-672 and described in Table 6-678.

Return to the Summary Table.

Figure 6-672. DSS_TPTC_B1_RD_BUS_SAFETY_FI Register

31	30	29	28	27	26	25	24
safe							
R/W-0h							
23	22	21	20	19	18	17	16
main							
R/W-0h							
15	14	13	12	11	10	9	8
data							
R/W-0h							
7	6	5	4	3	2	1	0
RESERVED		ded	sec	global_safe_req	global_main_req	global_safe	global_main
R/W-X		R/W-0h	R/W-0h	R/W-0h	R/W-0h	R/W-0h	R/W-0h

Table 6-678. DSS_TPTC_B1_RD_BUS_SAFETY_FI Register Field Descriptions

Bit	Field	Type	Reset	Description
31-24	safe	R/W	0h	
23-16	main	R/W	0h	
15-8	data	R/W	0h	
7-6	RESERVED	R/W	X	
5	ded	R/W	0h	
4	sec	R/W	0h	
3	global_safe_req	R/W	0h	
2	global_main_req	R/W	0h	
1	global_safe	R/W	0h	
0	global_main	R/W	0h	

6.2.6.153 DSS_TPTC_B1_RD_BUS_SAFETY_ERR Register (Offset = 930h) [reset = 0h]

DSS_TPTC_B1_RD_BUS_SAFETY_ERR is shown in Figure 6-673 and described in Table 6-679.

Return to the Summary Table.

Figure 6-673. DSS_TPTC_B1_RD_BUS_SAFETY_ERR Register

31	30	29	28	27	26	25	24	23	22	21	20	19	18	17	16
ded								sec							
R-0h								R-0h							
15	14	13	12	11	10	9	8	7	6	5	4	3	2	1	0

Copyright © 2025 Texas Instruments Incorporated

Figure 6-673. DSS_TPTC_B1_RD_BUS_SAFETY_ERR Register (continued)

comp_check	comp_err
R-0h	R-0h

Table 6-679. DSS_TPTC_B1_RD_BUS_SAFETY_ERR Register Field Descriptions

Bit	Field	Type	Reset	Description
31-24	ded	R	0h	
23-16	sec	R	0h	
15-8	comp_check	R	0h	
7-0	comp_err	R	0h	

6.2.6.154 DSS_TPTC_B1_RD_BUS_SAFETY_ERR_STAT_DATA0 Register (Offset = 934h) [reset = 0h]

DSS_TPTC_B1_RD_BUS_SAFETY_ERR_STAT_DATA0 is shown in Figure 6-674 and described in Table 6-680.

Return to the Summary Table.

Figure 6-674. DSS_TPTC_B1_RD_BUS_SAFETY_ERR_STAT_DATA0 Register

31	30	29	28	27	26	25	24	23	22	21	20	19	18	17	16	15	14	13	12	11	10	9	8	7	6	5	4	3	2	1	0
d3								d2								d1								d0							
R-0h								R-0h								R-0h								R-0h							

Table 6-680. DSS_TPTC_B1_RD_BUS_SAFETY_ERR_STAT_DATA0 Register Field Descriptions

Bit	Field	Type	Reset	Description
31-24	d3	R	0h	
23-16	d2	R	0h	
15-8	d1	R	0h	
7-0	d0	R	0h	

6.2.6.155 DSS_TPTC_B1_RD_BUS_SAFETY_ERR_STAT_CMD Register (Offset = 938h) [reset = 0h]

DSS_TPTC_B1_RD_BUS_SAFETY_ERR_STAT_CMD is shown in Figure 6-675 and described in Table 6-681.

Return to the Summary Table.

Figure 6-675. DSS_TPTC_B1_RD_BUS_SAFETY_ERR_STAT_CMD Register

31	30	29	28	27	26	25	24	23	22	21	20	19	18	17	16	15	14	13	12	11	10	9	8	7	6	5	4	3	2	1	0
stat																															
R-0h																															

Table 6-681. DSS_TPTC_B1_RD_BUS_SAFETY_ERR_STAT_CMD Register Field Descriptions

Bit	Field	Type	Reset	Description
31-0	stat	R	0h	

6.2.6.156 DSS_TPTC_B1_RD_BUS_SAFETY_ERR_STAT_READ Register (Offset = 93Ch) [reset = 0h]

DSS_TPTC_B1_RD_BUS_SAFETY_ERR_STAT_READ is shown in Figure 6-676 and described in Table 6-682.

Return to the Summary Table.

Copyright © 2025 Texas Instruments Incorporated

Figure 6-676. DSS_TPTC_B1_RD_BUS_SAFETY_ERR_STAT_READ Register

31	30	29	28	27	26	25	24	23	22	21	20	19	18	17	16	15	14	13	12	11	10	9	8	7	6	5	4	3	2	1	0
stat																															
R-0h																															

Table 6-682. DSS_TPTC_B1_RD_BUS_SAFETY_ERR_STAT_READ Register Field Descriptions

Bit	Field	Type	Reset	Description
31-0	stat	R	0h	

6.2.6.157 DSS_TPTC_C0_RD_BUS_SAFETY_CTRL Register (Offset = 940h) [reset = X]

DSS_TPTC_C0_RD_BUS_SAFETY_CTRL is shown in Figure 6-677 and described in Table 6-683.

Return to the Summary Table.

Figure 6-677. DSS_TPTC_C0_RD_BUS_SAFETY_CTRL Register

31	30	29	28	27	26	25	24
RESERVED							
R/W-X							
23	22	21	20	19	18	17	16
type							
R-9h							
15	14	13	12	11	10	9	8
RESERVED							err_clear
R/W-X							R/W-0h
7	6	5	4	3	2	1	0
RESERVED					enable		
R/W-X					R/W-7h		

Table 6-683. DSS_TPTC_C0_RD_BUS_SAFETY_CTRL Register Field Descriptions

Bit	Field	Type	Reset	Description
31-24	RESERVED	R/W	X	
23-16	type	R	9h	
15-9	RESERVED	R/W	X	
8	err_clear	R/W	0h	
7-3	RESERVED	R/W	X	
2-0	enable	R/W	7h	

6.2.6.158 DSS_TPTC_C0_RD_BUS_SAFETY_FI Register (Offset = 944h) [reset = X]

DSS_TPTC_C0_RD_BUS_SAFETY_FI is shown in Figure 6-678 and described in Table 6-684.

Return to the Summary Table.

Figure 6-678. DSS_TPTC_C0_RD_BUS_SAFETY_FI Register

31	30	29	28	27	26	25	24
safe							
R/W-0h							
23	22	21	20	19	18	17	16

Copyright © 2025 Texas Instruments Incorporated

Figure 6-678. DSS_TPTC_C0_RD_BUS_SAFETY_FI Register (continued)

main							
R/W-0h							
15	14	13	12	11	10	9	8
data							
R/W-0h							
7	6	5	4	3	2	1	0
RESERVED		ded	sec	global_safe_req	global_main_req	global_safe	global_main
R/W-X		R/W-0h	R/W-0h	R/W-0h	R/W-0h	R/W-0h	R/W-0h

Table 6-684. DSS_TPTC_C0_RD_BUS_SAFETY_FI Register Field Descriptions

Bit	Field	Type	Reset	Description
31-24	safe	R/W	0h	
23-16	main	R/W	0h	
15-8	data	R/W	0h	
7-6	RESERVED	R/W	X	
5	ded	R/W	0h	
4	sec	R/W	0h	
3	global_safe_req	R/W	0h	
2	global_main_req	R/W	0h	
1	global_safe	R/W	0h	
0	global_main	R/W	0h	

6.2.6.159 DSS_TPTC_C0_RD_BUS_SAFETY_ERR Register (Offset = 948h) [reset = 0h]

DSS_TPTC_C0_RD_BUS_SAFETY_ERR is shown in Figure 6-679 and described in Table 6-685.

Return to the Summary Table.

Figure 6-679. DSS_TPTC_C0_RD_BUS_SAFETY_ERR Register

31	30	29	28	27	26	25	24	23	22	21	20	19	18	17	16
ded								sec							
R-0h								R-0h							
15	14	13	12	11	10	9	8	7	6	5	4	3	2	1	0
comp_check								comp_err							
R-0h								R-0h							

Table 6-685. DSS_TPTC_C0_RD_BUS_SAFETY_ERR Register Field Descriptions

Bit	Field	Type	Reset	Description
31-24	ded	R	0h	
23-16	sec	R	0h	
15-8	comp_check	R	0h	
7-0	comp_err	R	0h	

Copyright © 2025 Texas Instruments Incorporated

6.2.6.160 DSS_TPTC_C0_RD_BUS_SAFETY_ERR_STAT_DATA0 Register (Offset = 94Ch) [reset = 0h]

DSS_TPTC_C0_RD_BUS_SAFETY_ERR_STAT_DATA0 is shown in Figure 6-680 and described in Table 6-686.

Return to the Summary Table.

Figure 6-680. DSS_TPTC_C0_RD_BUS_SAFETY_ERR_STAT_DATA0 Register

31	30	29	28	27	26	25	24	23	22	21	20	19	18	17	16	15	14	13	12	11	10	9	8	7	6	5	4	3	2	1	0
d3								d2								d1								d0							
R-0h								R-0h								R-0h								R-0h							

Table 6-686. DSS_TPTC_C0_RD_BUS_SAFETY_ERR_STAT_DATA0 Register Field Descriptions

Bit	Field	Type	Reset	Description
31-24	d3	R	0h	
23-16	d2	R	0h	
15-8	d1	R	0h	
7-0	d0	R	0h	

6.2.6.161 DSS_TPTC_C0_RD_BUS_SAFETY_ERR_STAT_CMD Register (Offset = 950h) [reset = 0h]

DSS_TPTC_C0_RD_BUS_SAFETY_ERR_STAT_CMD is shown in Figure 6-681 and described in Table 6-687.

Return to the Summary Table.

Figure 6-681. DSS_TPTC_C0_RD_BUS_SAFETY_ERR_STAT_CMD Register

31	30	29	28	27	26	25	24	23	22	21	20	19	18	17	16	15	14	13	12	11	10	9	8	7	6	5	4	3	2	1	0
stat																															
R-0h																															

Table 6-687. DSS_TPTC_C0_RD_BUS_SAFETY_ERR_STAT_CMD Register Field Descriptions

Bit	Field	Type	Reset	Description
31-0	stat	R	0h	

6.2.6.162 DSS_TPTC_C0_RD_BUS_SAFETY_ERR_STAT_READ Register (Offset = 954h) [reset = 0h]

DSS_TPTC_C0_RD_BUS_SAFETY_ERR_STAT_READ is shown in Figure 6-682 and described in Table 6-688.

Return to the Summary Table.

Figure 6-682. DSS_TPTC_C0_RD_BUS_SAFETY_ERR_STAT_READ Register

31	30	29	28	27	26	25	24	23	22	21	20	19	18	17	16	15	14	13	12	11	10	9	8	7	6	5	4	3	2	1	0
stat																															
R-0h																															

Table 6-688. DSS_TPTC_C0_RD_BUS_SAFETY_ERR_STAT_READ Register Field Descriptions

Bit	Field	Type	Reset	Description
31-0	stat	R	0h	

6.2.6.163 DSS_TPTC_C1_RD_BUS_SAFETY_CTRL Register (Offset = 958h) [reset = X]

DSS_TPTC_C1_RD_BUS_SAFETY_CTRL is shown in Figure 6-683 and described in Table 6-689.

Copyright © 2025 Texas Instruments Incorporated

Return to the Summary Table.

Figure 6-683. DSS_TPTC_C1_RD_BUS_SAFETY_CTRL Register

31	30	29	28	27	26	25	24
RESERVED							
R/W-X							
23	22	21	20	19	18	17	16
type							
R-9h							
15	14	13	12	11	10	9	8
RESERVED							err_clear
R/W-X							R/W-0h
7	6	5	4	3	2	1	0
RESERVED						enable	
R/W-X						R/W-7h	

Table 6-689. DSS_TPTC_C1_RD_BUS_SAFETY_CTRL Register Field Descriptions

Bit	Field	Type	Reset	Description
31-24	RESERVED	R/W	X	
23-16	type	R	9h	
15-9	RESERVED	R/W	X	
8	err_clear	R/W	0h	
7-3	RESERVED	R/W	X	
2-0	enable	R/W	7h	

6.2.6.164 DSS_TPTC_C1_RD_BUS_SAFETY_FI Register (Offset = 95Ch) [reset = X]

DSS_TPTC_C1_RD_BUS_SAFETY_FI is shown in Figure 6-684 and described in Table 6-690.

Return to the Summary Table.

Figure 6-684. DSS_TPTC_C1_RD_BUS_SAFETY_FI Register

31	30	29	28	27	26	25	24
safe							
R/W-0h							
23	22	21	20	19	18	17	16
main							
R/W-0h							
15	14	13	12	11	10	9	8
data							
R/W-0h							
7	6	5	4	3	2	1	0
RESERVED		ded	sec	global_safe_req	global_main_req	global_safe	global_main
R/W-X		R/W-0h	R/W-0h	R/W-0h	R/W-0h	R/W-0h	R/W-0h

Copyright © 2025 Texas Instruments Incorporated

Table 6-690. DSS_TPTC_C1_RD_BUS_SAFETY_FI Register Field Descriptions

Bit	Field	Type	Reset	Description
31-24	safe	R/W	0h	
23-16	main	R/W	0h	
15-8	data	R/W	0h	
7-6	RESERVED	R/W	X	
5	ded	R/W	0h	
4	sec	R/W	0h	
3	global_safe_req	R/W	0h	
2	global_main_req	R/W	0h	
1	global_safe	R/W	0h	
0	global_main	R/W	0h	

6.2.6.165 DSS_TPTC_C1_RD_BUS_SAFETY_ERR Register (Offset = 960h) [reset = 0h]

DSS_TPTC_C1_RD_BUS_SAFETY_ERR is shown in Figure 6-685 and described in Table 6-691.

Return to the Summary Table.

Figure 6-685. DSS_TPTC_C1_RD_BUS_SAFETY_ERR Register

31	30	29	28	27	26	25	24	23	22	21	20	19	18	17	16
ded								sec							
R-0h								R-0h							
15	14	13	12	11	10	9	8	7	6	5	4	3	2	1	0
comp_check								comp_err							
R-0h								R-0h							

Table 6-691. DSS_TPTC_C1_RD_BUS_SAFETY_ERR Register Field Descriptions

Bit	Field	Type	Reset	Description
31-24	ded	R	0h	
23-16	sec	R	0h	
15-8	comp_check	R	0h	
7-0	comp_err	R	0h	

6.2.6.166 DSS_TPTC_C1_RD_BUS_SAFETY_ERR_STAT_DATA0 Register (Offset = 964h) [reset = 0h]

DSS_TPTC_C1_RD_BUS_SAFETY_ERR_STAT_DATA0 is shown in Figure 6-686 and described in Table 6-692.

Return to the Summary Table.

Figure 6-686. DSS_TPTC_C1_RD_BUS_SAFETY_ERR_STAT_DATA0 Register

31	30	29	28	27	26	25	24	23	22	21	20	19	18	17	16	15	14	13	12	11	10	9	8	7	6	5	4	3	2	1	0
d3								d2								d1								d0							
R-0h								R-0h								R-0h								R-0h							

Table 6-692. DSS_TPTC_C1_RD_BUS_SAFETY_ERR_STAT_DATA0 Register Field Descriptions

Bit	Field	Type	Reset	Description
31-24	d3	R	0h	
23-16	d2	R	0h	

Copyright © 2025 Texas Instruments Incorporated

Table 6-692. DSS_TPTC_C1_RD_BUS_SAFETY_ERR_STAT_DATA0 Register Field Descriptions (continued)

Bit	Field	Type	Reset	Description
15-8	d1	R	0h	
7-0	d0	R	0h	

6.2.6.167 DSS_TPTC_C1_RD_BUS_SAFETY_ERR_STAT_CMD Register (Offset = 968h) [reset = 0h]

DSS_TPTC_C1_RD_BUS_SAFETY_ERR_STAT_CMD is shown in Figure 6-687 and described in Table 6-693.

Return to the Summary Table.

Figure 6-687. DSS_TPTC_C1_RD_BUS_SAFETY_ERR_STAT_CMD Register

31	30	29	28	27	26	25	24	23	22	21	20	19	18	17	16	15	14	13	12	11	10	9	8	7	6	5	4	3	2	1	0
stat																															
R-0h																															

Table 6-693. DSS_TPTC_C1_RD_BUS_SAFETY_ERR_STAT_CMD Register Field Descriptions

Bit	Field	Type	Reset	Description
31-0	stat	R	0h	

6.2.6.168 DSS_TPTC_C1_RD_BUS_SAFETY_ERR_STAT_READ Register (Offset = 96Ch) [reset = 0h]

DSS_TPTC_C1_RD_BUS_SAFETY_ERR_STAT_READ is shown in Figure 6-688 and described in Table 6-694.

Return to the Summary Table.

Figure 6-688. DSS_TPTC_C1_RD_BUS_SAFETY_ERR_STAT_READ Register

31	30	29	28	27	26	25	24	23	22	21	20	19	18	17	16	15	14	13	12	11	10	9	8	7	6	5	4	3	2	1	0
stat																															
R-0h																															

Table 6-694. DSS_TPTC_C1_RD_BUS_SAFETY_ERR_STAT_READ Register Field Descriptions

Bit	Field	Type	Reset	Description
31-0	stat	R	0h	

6.2.6.169 DSS_TPTC_C2_RD_BUS_SAFETY_CTRL Register (Offset = 970h) [reset = X]

DSS_TPTC_C2_RD_BUS_SAFETY_CTRL is shown in Figure 6-689 and described in Table 6-695.

Return to the Summary Table.

Figure 6-689. DSS_TPTC_C2_RD_BUS_SAFETY_CTRL Register

31	30	29	28	27	26	25	24
RESERVED							
R/W-X							
23	22	21	20	19	18	17	16
type							
R-9h							
15	14	13	12	11	10	9	8
RESERVED							err_clear
R/W-X							R/W-0h

Copyright © 2025 Texas Instruments Incorporated

Figure 6-689. DSS_TPTC_C2_RD_BUS_SAFETY_CTRL Register (continued)

7	6	5	4	3	2	1	0
RESERVED						enable	
R/W-X						R/W-7h	

Table 6-695. DSS_TPTC_C2_RD_BUS_SAFETY_CTRL Register Field Descriptions

Bit	Field	Type	Reset	Description
31-24	RESERVED	R/W	X	
23-16	type	R	9h	
15-9	RESERVED	R/W	X	
8	err_clear	R/W	0h	
7-3	RESERVED	R/W	X	
2-0	enable	R/W	7h	

6.2.6.170 DSS_TPTC_C2_RD_BUS_SAFETY_FI Register (Offset = 974h) [reset = X]

DSS_TPTC_C2_RD_BUS_SAFETY_FI is shown in Figure 6-690 and described in Table 6-696.

Return to the Summary Table.

Figure 6-690. DSS_TPTC_C2_RD_BUS_SAFETY_FI Register

31	30	29	28	27	26	25	24
safe							
R/W-0h							
23	22	21	20	19	18	17	16
main							
R/W-0h							
15	14	13	12	11	10	9	8
data							
R/W-0h							
7	6	5	4	3	2	1	0
RESERVED		ded	sec	global_safe_req	global_main_req	global_safe	global_main
R/W-X		R/W-0h	R/W-0h	R/W-0h	R/W-0h	R/W-0h	R/W-0h

Table 6-696. DSS_TPTC_C2_RD_BUS_SAFETY_FI Register Field Descriptions

Bit	Field	Type	Reset	Description
31-24	safe	R/W	0h	
23-16	main	R/W	0h	
15-8	data	R/W	0h	
7-6	RESERVED	R/W	X	
5	ded	R/W	0h	
4	sec	R/W	0h	
3	global_safe_req	R/W	0h	
2	global_main_req	R/W	0h	
1	global_safe	R/W	0h	
0	global_main	R/W	0h	

Copyright © 2025 Texas Instruments Incorporated

6.2.6.171 DSS_TPTC_C2_RD_BUS_SAFETY_ERR Register (Offset = 978h) [reset = 0h]

DSS_TPTC_C2_RD_BUS_SAFETY_ERR is shown in Figure 6-691 and described in Table 6-697.

Return to the Summary Table.

Figure 6-691. DSS_TPTC_C2_RD_BUS_SAFETY_ERR Register

31	30	29	28	27	26	25	24	23	22	21	20	19	18	17	16
ded								sec							
R-0h								R-0h							
15	14	13	12	11	10	9	8	7	6	5	4	3	2	1	0
comp_check								comp_err							
R-0h								R-0h							

Table 6-697. DSS_TPTC_C2_RD_BUS_SAFETY_ERR Register Field Descriptions

Bit	Field	Type	Reset	Description
31-24	ded	R	0h	
23-16	sec	R	0h	
15-8	comp_check	R	0h	
7-0	comp_err	R	0h	

6.2.6.172 DSS_TPTC_C2_RD_BUS_SAFETY_ERR_STAT_DATA0 Register (Offset = 97Ch) [reset = 0h]

DSS_TPTC_C2_RD_BUS_SAFETY_ERR_STAT_DATA0 is shown in Figure 6-692 and described in Table 6-698.

Return to the Summary Table.

Figure 6-692. DSS_TPTC_C2_RD_BUS_SAFETY_ERR_STAT_DATA0 Register

31	30	29	28	27	26	25	24	23	22	21	20	19	18	17	16	15	14	13	12	11	10	9	8	7	6	5	4	3	2	1	0
d3								d2								d1								d0							
R-0h								R-0h								R-0h								R-0h							

Table 6-698. DSS_TPTC_C2_RD_BUS_SAFETY_ERR_STAT_DATA0 Register Field Descriptions

Bit	Field	Type	Reset	Description
31-24	d3	R	0h	
23-16	d2	R	0h	
15-8	d1	R	0h	
7-0	d0	R	0h	

6.2.6.173 DSS_TPTC_C2_RD_BUS_SAFETY_ERR_STAT_CMD Register (Offset = 980h) [reset = 0h]

DSS_TPTC_C2_RD_BUS_SAFETY_ERR_STAT_CMD is shown in Figure 6-693 and described in Table 6-699.

Return to the Summary Table.

Figure 6-693. DSS_TPTC_C2_RD_BUS_SAFETY_ERR_STAT_CMD Register

31	30	29	28	27	26	25	24	23	22	21	20	19	18	17	16	15	14	13	12	11	10	9	8	7	6	5	4	3	2	1	0
stat																															
R-0h																															

Copyright © 2025 Texas Instruments Incorporated

Table 6-699. DSS_TPTC_C2_RD_BUS_SAFETY_ERR_STAT_CMD Register Field Descriptions

Bit	Field	Type	Reset	Description
31-0	stat	R	0h	

6.2.6.174 DSS_TPTC_C2_RD_BUS_SAFETY_ERR_STAT_READ Register (Offset = 984h) [reset = 0h]

DSS_TPTC_C2_RD_BUS_SAFETY_ERR_STAT_READ is shown in Figure 6-694 and described in Table 6-700.

Return to the Summary Table.

Figure 6-694. DSS_TPTC_C2_RD_BUS_SAFETY_ERR_STAT_READ Register

31	30	29	28	27	26	25	24	23	22	21	20	19	18	17	16	15	14	13	12	11	10	9	8	7	6	5	4	3	2	1	0
stat																															
R-0h																															

Table 6-700. DSS_TPTC_C2_RD_BUS_SAFETY_ERR_STAT_READ Register Field Descriptions

Bit	Field	Type	Reset	Description
31-0	stat	R	0h	

6.2.6.175 DSS_TPTC_C3_RD_BUS_SAFETY_CTRL Register (Offset = 988h) [reset = X]

DSS_TPTC_C3_RD_BUS_SAFETY_CTRL is shown in Figure 6-695 and described in Table 6-701.

Return to the Summary Table.

Figure 6-695. DSS_TPTC_C3_RD_BUS_SAFETY_CTRL Register

31	30	29	28	27	26	25	24
RESERVED							
R/W-X							
23	22	21	20	19	18	17	16
type							
R-9h							
15	14	13	12	11	10	9	8
RESERVED							err_clear
R/W-X							R/W-0h
7	6	5	4	3	2	1	0
RESERVED						enable	
R/W-X						R/W-7h	

Table 6-701. DSS_TPTC_C3_RD_BUS_SAFETY_CTRL Register Field Descriptions

Bit	Field	Type	Reset	Description
31-24	RESERVED	R/W	X	
23-16	type	R	9h	
15-9	RESERVED	R/W	X	
8	err_clear	R/W	0h	
7-3	RESERVED	R/W	X	
2-0	enable	R/W	7h	

Copyright © 2025 Texas Instruments Incorporated

6.2.6.176 DSS_TPTC_C3_RD_BUS_SAFETY_FI Register (Offset = 98Ch) [reset = X]

DSS_TPTC_C3_RD_BUS_SAFETY_FI is shown in Figure 6-696 and described in Table 6-702.

Return to the Summary Table.

Figure 6-696. DSS_TPTC_C3_RD_BUS_SAFETY_FI Register

31	30	29	28	27	26	25	24
safe							
R/W-0h							
23	22	21	20	19	18	17	16
main							
R/W-0h							
15	14	13	12	11	10	9	8
data							
R/W-0h							
7	6	5	4	3	2	1	0
RESERVED		ded	sec	global_safe_req	global_main_req	global_safe	global_main
R/W-X		R/W-0h	R/W-0h	R/W-0h	R/W-0h	R/W-0h	R/W-0h

Table 6-702. DSS_TPTC_C3_RD_BUS_SAFETY_FI Register Field Descriptions

Bit	Field	Type	Reset	Description
31-24	safe	R/W	0h	
23-16	main	R/W	0h	
15-8	data	R/W	0h	
7-6	RESERVED	R/W	X	
5	ded	R/W	0h	
4	sec	R/W	0h	
3	global_safe_req	R/W	0h	
2	global_main_req	R/W	0h	
1	global_safe	R/W	0h	
0	global_main	R/W	0h	

6.2.6.177 DSS_TPTC_C3_RD_BUS_SAFETY_ERR Register (Offset = 990h) [reset = 0h]

DSS_TPTC_C3_RD_BUS_SAFETY_ERR is shown in Figure 6-697 and described in Table 6-703.

Return to the Summary Table.

Figure 6-697. DSS_TPTC_C3_RD_BUS_SAFETY_ERR Register

31	30	29	28	27	26	25	24	23	22	21	20	19	18	17	16
ded								sec							
R-0h								R-0h							
15	14	13	12	11	10	9	8	7	6	5	4	3	2	1	0
comp_check								comp_err							
R-0h								R-0h							

Copyright © 2025 Texas Instruments Incorporated

Table 6-703. DSS_TPTC_C3_RD_BUS_SAFETY_ERR Register Field Descriptions

Bit	Field	Type	Reset	Description
31-24	ded	R	0h	
23-16	sec	R	0h	
15-8	comp_check	R	0h	
7-0	comp_err	R	0h	

6.2.6.178 DSS_TPTC_C3_RD_BUS_SAFETY_ERR_STAT_DATA0 Register (Offset = 994h) [reset = 0h]

DSS_TPTC_C3_RD_BUS_SAFETY_ERR_STAT_DATA0 is shown in Figure 6-698 and described in Table 6-704.

Return to the Summary Table.

Figure 6-698. DSS_TPTC_C3_RD_BUS_SAFETY_ERR_STAT_DATA0 Register

31	30	29	28	27	26	25	24	23	22	21	20	19	18	17	16	15	14	13	12	11	10	9	8	7	6	5	4	3	2	1	0
d3								d2								d1								d0							
R-0h								R-0h								R-0h								R-0h							

Table 6-704. DSS_TPTC_C3_RD_BUS_SAFETY_ERR_STAT_DATA0 Register Field Descriptions

Bit	Field	Type	Reset	Description
31-24	d3	R	0h	
23-16	d2	R	0h	
15-8	d1	R	0h	
7-0	d0	R	0h	

6.2.6.179 DSS_TPTC_C3_RD_BUS_SAFETY_ERR_STAT_CMD Register (Offset = 998h) [reset = 0h]

DSS_TPTC_C3_RD_BUS_SAFETY_ERR_STAT_CMD is shown in Figure 6-699 and described in Table 6-705.

Return to the Summary Table.

Figure 6-699. DSS_TPTC_C3_RD_BUS_SAFETY_ERR_STAT_CMD Register

31	30	29	28	27	26	25	24	23	22	21	20	19	18	17	16	15	14	13	12	11	10	9	8	7	6	5	4	3	2	1	0
stat																															
R-0h																															

Table 6-705. DSS_TPTC_C3_RD_BUS_SAFETY_ERR_STAT_CMD Register Field Descriptions

Bit	Field	Type	Reset	Description
31-0	stat	R	0h	

6.2.6.180 DSS_TPTC_C3_RD_BUS_SAFETY_ERR_STAT_READ Register (Offset = 99Ch) [reset = 0h]

DSS_TPTC_C3_RD_BUS_SAFETY_ERR_STAT_READ is shown in Figure 6-700 and described in Table 6-706.

Return to the Summary Table.

Figure 6-700. DSS_TPTC_C3_RD_BUS_SAFETY_ERR_STAT_READ Register

31	30	29	28	27	26	25	24	23	22	21	20	19	18	17	16	15	14	13	12	11	10	9	8	7	6	5	4	3	2	1	0
stat																															
R-0h																															

Copyright © 2025 Texas Instruments Incorporated

Table 6-706. DSS_TPTC_C3_RD_BUS_SAFETY_ERR_STAT_READ Register Field Descriptions

Bit	Field	Type	Reset	Description
31-0	stat	R	0h	

6.2.6.181 DSS_TPTC_C4_RD_BUS_SAFETY_CTRL Register (Offset = 9A0h) [reset = X]

DSS_TPTC_C4_RD_BUS_SAFETY_CTRL is shown in Figure 6-701 and described in Table 6-707.

Return to the Summary Table.

Figure 6-701. DSS_TPTC_C4_RD_BUS_SAFETY_CTRL Register

31	30	29	28	27	26	25	24
RESERVED							
R/W-X							
23	22	21	20	19	18	17	16
type							
R-9h							
15	14	13	12	11	10	9	8
RESERVED							err_clear
R/W-X							R/W-0h
7	6	5	4	3	2	1	0
RESERVED						enable	
R/W-X						R/W-7h	

Table 6-707. DSS_TPTC_C4_RD_BUS_SAFETY_CTRL Register Field Descriptions

Bit	Field	Type	Reset	Description
31-24	RESERVED	R/W	X	
23-16	type	R	9h	
15-9	RESERVED	R/W	X	
8	err_clear	R/W	0h	
7-3	RESERVED	R/W	X	
2-0	enable	R/W	7h	

6.2.6.182 DSS_TPTC_C4_RD_BUS_SAFETY_FI Register (Offset = 9A4h) [reset = X]

DSS_TPTC_C4_RD_BUS_SAFETY_FI is shown in Figure 6-702 and described in Table 6-708.

Return to the Summary Table.

Figure 6-702. DSS_TPTC_C4_RD_BUS_SAFETY_FI Register

31	30	29	28	27	26	25	24
safe							
R/W-0h							
23	22	21	20	19	18	17	16
main							
R/W-0h							
15	14	13	12	11	10	9	8
data							
R/W-0h							

Copyright © 2025 Texas Instruments Incorporated

Figure 6-702. DSS_TPTC_C4_RD_BUS_SAFETY_FI Register (continued)

7	6	5	4	3	2	1	0
RESERVED		ded	sec	global_safe_req	global_main_req	global_safe	global_main
R/W-X		R/W-0h	R/W-0h	R/W-0h	R/W-0h	R/W-0h	R/W-0h

Table 6-708. DSS_TPTC_C4_RD_BUS_SAFETY_FI Register Field Descriptions

Bit	Field	Type	Reset	Description
31-24	safe	R/W	0h	
23-16	main	R/W	0h	
15-8	data	R/W	0h	
7-6	RESERVED	R/W	X	
5	ded	R/W	0h	
4	sec	R/W	0h	
3	global_safe_req	R/W	0h	
2	global_main_req	R/W	0h	
1	global_safe	R/W	0h	
0	global_main	R/W	0h	

6.2.6.183 DSS_TPTC_C4_RD_BUS_SAFETY_ERR Register (Offset = 9A8h) [reset = 0h]

DSS_TPTC_C4_RD_BUS_SAFETY_ERR is shown in Figure 6-703 and described in Table 6-709.

Return to the Summary Table.

Figure 6-703. DSS_TPTC_C4_RD_BUS_SAFETY_ERR Register

31	30	29	28	27	26	25	24	23	22	21	20	19	18	17	16
ded								sec							
R-0h								R-0h							
15	14	13	12	11	10	9	8	7	6	5	4	3	2	1	0
comp_check								comp_err							
R-0h								R-0h							

Table 6-709. DSS_TPTC_C4_RD_BUS_SAFETY_ERR Register Field Descriptions

Bit	Field	Type	Reset	Description
31-24	ded	R	0h	
23-16	sec	R	0h	
15-8	comp_check	R	0h	
7-0	comp_err	R	0h	

6.2.6.184 DSS_TPTC_C4_RD_BUS_SAFETY_ERR_STAT_DATA0 Register (Offset = 9ACh) [reset = 0h]

DSS_TPTC_C4_RD_BUS_SAFETY_ERR_STAT_DATA0 is shown in Figure 6-704 and described in Table 6-710.

Return to the Summary Table.

Figure 6-704. DSS_TPTC_C4_RD_BUS_SAFETY_ERR_STAT_DATA0 Register

31	30	29	28	27	26	25	24	23	22	21	20	19	18	17	16	15	14	13	12	11	10	9	8	7	6	5	4	3	2	1	0
d3								d2								d1								d0							
R-0h								R-0h								R-0h								R-0h							

Copyright © 2025 Texas Instruments Incorporated

Figure 6-704. DSS_TPTC_C4_RD_BUS_SAFETY_ERR_STAT_DATA0 Register (continued)

Table 6-710. DSS_TPTC_C4_RD_BUS_SAFETY_ERR_STAT_DATA0 Register Field Descriptions

Bit	Field	Type	Reset	Description
31-24	d3	R	0h	
23-16	d2	R	0h	
15-8	d1	R	0h	
7-0	d0	R	0h	

6.2.6.185 DSS_TPTC_C4_RD_BUS_SAFETY_ERR_STAT_CMD Register (Offset = 9B0h) [reset = 0h]

DSS_TPTC_C4_RD_BUS_SAFETY_ERR_STAT_CMD is shown in Figure 6-705 and described in Table 6-711.

Return to the Summary Table.

Figure 6-705. DSS_TPTC_C4_RD_BUS_SAFETY_ERR_STAT_CMD Register

31	30	29	28	27	26	25	24	23	22	21	20	19	18	17	16	15	14	13	12	11	10	9	8	7	6	5	4	3	2	1	0
stat																															
R-0h																															

Table 6-711. DSS_TPTC_C4_RD_BUS_SAFETY_ERR_STAT_CMD Register Field Descriptions

Bit	Field	Type	Reset	Description
31-0	stat	R	0h	

6.2.6.186 DSS_TPTC_C4_RD_BUS_SAFETY_ERR_STAT_READ Register (Offset = 9B4h) [reset = 0h]

DSS_TPTC_C4_RD_BUS_SAFETY_ERR_STAT_READ is shown in Figure 6-706 and described in Table 6-712.

Return to the Summary Table.

Figure 6-706. DSS_TPTC_C4_RD_BUS_SAFETY_ERR_STAT_READ Register

31	30	29	28	27	26	25	24	23	22	21	20	19	18	17	16	15	14	13	12	11	10	9	8	7	6	5	4	3	2	1	0
stat																															
R-0h																															

Table 6-712. DSS_TPTC_C4_RD_BUS_SAFETY_ERR_STAT_READ Register Field Descriptions

Bit	Field	Type	Reset	Description
31-0	stat	R	0h	

6.2.6.187 DSS_TPTC_C5_RD_BUS_SAFETY_CTRL Register (Offset = 9B8h) [reset = X]

DSS_TPTC_C5_RD_BUS_SAFETY_CTRL is shown in Figure 6-707 and described in Table 6-713.

Return to the Summary Table.

Figure 6-707. DSS_TPTC_C5_RD_BUS_SAFETY_CTRL Register

31	30	29	28	27	26	25	24
RESERVED							
R/W-X							
23	22	21	20	19	18	17	16
type							
R-9h							

Copyright © 2025 Texas Instruments Incorporated

Figure 6-707. DSS_TPTC_C5_RD_BUS_SAFETY_CTRL Register (continued)

15	14	13	12	11	10	9	8
RESERVED							err_clear
R/W-X							R/W-0h
7	6	5	4	3	2	1	0
RESERVED						enable	
R/W-X						R/W-7h	

Table 6-713. DSS_TPTC_C5_RD_BUS_SAFETY_CTRL Register Field Descriptions

Bit	Field	Type	Reset	Description
31-24	RESERVED	R/W	X	
23-16	type	R	9h	
15-9	RESERVED	R/W	X	
8	err_clear	R/W	0h	
7-3	RESERVED	R/W	X	
2-0	enable	R/W	7h	

6.2.6.188 DSS_TPTC_C5_RD_BUS_SAFETY_FI Register (Offset = 9BCh) [reset = X]

DSS_TPTC_C5_RD_BUS_SAFETY_FI is shown in Figure 6-708 and described in Table 6-714.

Return to the Summary Table.

Figure 6-708. DSS_TPTC_C5_RD_BUS_SAFETY_FI Register

31	30	29	28	27	26	25	24
safe							
R/W-0h							
23	22	21	20	19	18	17	16
main							
R/W-0h							
15	14	13	12	11	10	9	8
data							
R/W-0h							
7	6	5	4	3	2	1	0
RESERVED		ded	sec	global_safe_req	global_main_req	global_safe	global_main
R/W-X		R/W-0h	R/W-0h	R/W-0h	R/W-0h	R/W-0h	R/W-0h

Table 6-714. DSS_TPTC_C5_RD_BUS_SAFETY_FI Register Field Descriptions

Bit	Field	Type	Reset	Description
31-24	safe	R/W	0h	
23-16	main	R/W	0h	
15-8	data	R/W	0h	
7-6	RESERVED	R/W	X	
5	ded	R/W	0h	
4	sec	R/W	0h	
3	global_safe_req	R/W	0h	
2	global_main_req	R/W	0h	

Copyright © 2025 Texas Instruments Incorporated

Table 6-714. DSS_TPTC_C5_RD_BUS_SAFETY_FI Register Field Descriptions (continued)

Bit	Field	Type	Reset	Description
1	global_safe	R/W	0h	
0	global_main	R/W	0h	

6.2.6.189 DSS_TPTC_C5_RD_BUS_SAFETY_ERR Register (Offset = 9C0h) [reset = 0h]

DSS_TPTC_C5_RD_BUS_SAFETY_ERR is shown in Figure 6-709 and described in Table 6-715.

Return to the Summary Table.

Figure 6-709. DSS_TPTC_C5_RD_BUS_SAFETY_ERR Register

31	30	29	28	27	26	25	24	23	22	21	20	19	18	17	16
ded								sec							
R-0h								R-0h							
15	14	13	12	11	10	9	8	7	6	5	4	3	2	1	0
comp_check								comp_err							
R-0h								R-0h							

Table 6-715. DSS_TPTC_C5_RD_BUS_SAFETY_ERR Register Field Descriptions

Bit	Field	Type	Reset	Description
31-24	ded	R	0h	
23-16	sec	R	0h	
15-8	comp_check	R	0h	
7-0	comp_err	R	0h	

6.2.6.190 DSS_TPTC_C5_RD_BUS_SAFETY_ERR_STAT_DATA0 Register (Offset = 9C4h) [reset = 0h]

DSS_TPTC_C5_RD_BUS_SAFETY_ERR_STAT_DATA0 is shown in Figure 6-710 and described in Table 6-716.

Return to the Summary Table.

Figure 6-710. DSS_TPTC_C5_RD_BUS_SAFETY_ERR_STAT_DATA0 Register

31	30	29	28	27	26	25	24	23	22	21	20	19	18	17	16	15	14	13	12	11	10	9	8	7	6	5	4	3	2	1	0
d3								d2								d1								d0							
R-0h								R-0h								R-0h								R-0h							

Table 6-716. DSS_TPTC_C5_RD_BUS_SAFETY_ERR_STAT_DATA0 Register Field Descriptions

Bit	Field	Type	Reset	Description
31-24	d3	R	0h	
23-16	d2	R	0h	
15-8	d1	R	0h	
7-0	d0	R	0h	

6.2.6.191 DSS_TPTC_C5_RD_BUS_SAFETY_ERR_STAT_CMD Register (Offset = 9C8h) [reset = 0h]

DSS_TPTC_C5_RD_BUS_SAFETY_ERR_STAT_CMD is shown in Figure 6-711 and described in Table 6-717.

Return to the Summary Table.

Copyright © 2025 Texas Instruments Incorporated

Figure 6-711. DSS_TPTC_C5_RD_BUS_SAFETY_ERR_STAT_CMD Register

31	30	29	28	27	26	25	24	23	22	21	20	19	18	17	16	15	14	13	12	11	10	9	8	7	6	5	4	3	2	1	0
stat																															
R-0h																															

Table 6-717. DSS_TPTC_C5_RD_BUS_SAFETY_ERR_STAT_CMD Register Field Descriptions

Bit	Field	Type	Reset	Description
31-0	stat	R	0h	

6.2.6.192 DSS_TPTC_C5_RD_BUS_SAFETY_ERR_STAT_READ Register (Offset = 9CCh) [reset = 0h]

DSS_TPTC_C5_RD_BUS_SAFETY_ERR_STAT_READ is shown in Figure 6-712 and described in Table 6-718.

Return to the Summary Table.

Figure 6-712. DSS_TPTC_C5_RD_BUS_SAFETY_ERR_STAT_READ Register

31	30	29	28	27	26	25	24	23	22	21	20	19	18	17	16	15	14	13	12	11	10	9	8	7	6	5	4	3	2	1	0
stat																															
R-0h																															

Table 6-718. DSS_TPTC_C5_RD_BUS_SAFETY_ERR_STAT_READ Register Field Descriptions

Bit	Field	Type	Reset	Description
31-0	stat	R	0h	

6.2.6.193 DSS_TPTC_A0_WR_BUS_SAFETY_CTRL Register (Offset = 9D0h) [reset = X]

DSS_TPTC_A0_WR_BUS_SAFETY_CTRL is shown in Figure 6-713 and described in Table 6-719.

Return to the Summary Table.

Figure 6-713. DSS_TPTC_A0_WR_BUS_SAFETY_CTRL Register

31	30	29	28	27	26	25	24
RESERVED							
R/W-X							
23	22	21	20	19	18	17	16
type							
R-7h							
15	14	13	12	11	10	9	8
RESERVED							err_clear
R/W-X							R/W-0h
7	6	5	4	3	2	1	0
RESERVED						enable	
R/W-X						R/W-7h	

Table 6-719. DSS_TPTC_A0_WR_BUS_SAFETY_CTRL Register Field Descriptions

Bit	Field	Type	Reset	Description
31-24	RESERVED	R/W	X	
23-16	type	R	7h	
15-9	RESERVED	R/W	X	
8	err_clear	R/W	0h	

Copyright © 2025 Texas Instruments Incorporated

Table 6-719. DSS_TPTC_A0_WR_BUS_SAFETY_CTRL Register Field Descriptions (continued)

Bit	Field	Type	Reset	Description
7-3	RESERVED	R/W	X	
2-0	enable	R/W	7h	

6.2.6.194 DSS_TPTC_A0_WR_BUS_SAFETY_FI Register (Offset = 9D4h) [reset = X]

DSS_TPTC_A0_WR_BUS_SAFETY_FI is shown in Figure 6-714 and described in Table 6-720.

Return to the Summary Table.

Figure 6-714. DSS_TPTC_A0_WR_BUS_SAFETY_FI Register

31	30	29	28	27	26	25	24
safe							
R/W-0h							
23	22	21	20	19	18	17	16
main							
R/W-0h							
15	14	13	12	11	10	9	8
data							
R/W-0h							
7	6	5	4	3	2	1	0
RESERVED		ded	sec	global_safe_req	global_main_req	global_safe	global_main
R/W-X		R/W-0h	R/W-0h	R/W-0h	R/W-0h	R/W-0h	R/W-0h

Table 6-720. DSS_TPTC_A0_WR_BUS_SAFETY_FI Register Field Descriptions

Bit	Field	Type	Reset	Description
31-24	safe	R/W	0h	
23-16	main	R/W	0h	
15-8	data	R/W	0h	
7-6	RESERVED	R/W	X	
5	ded	R/W	0h	
4	sec	R/W	0h	
3	global_safe_req	R/W	0h	
2	global_main_req	R/W	0h	
1	global_safe	R/W	0h	
0	global_main	R/W	0h	

6.2.6.195 DSS_TPTC_A0_WR_BUS_SAFETY_ERR Register (Offset = 9D8h) [reset = 0h]

DSS_TPTC_A0_WR_BUS_SAFETY_ERR is shown in Figure 6-715 and described in Table 6-721.

Return to the Summary Table.

Figure 6-715. DSS_TPTC_A0_WR_BUS_SAFETY_ERR Register

31	30	29	28	27	26	25	24	23	22	21	20	19	18	17	16
ded								sec							
R-0h								R-0h							

Copyright © 2025 Texas Instruments Incorporated

Figure 6-715. DSS_TPTC_A0_WR_BUS_SAFETY_ERR Register (continued)

15	14	13	12	11	10	9	8	7	6	5	4	3	2	1	0
comp_check								comp_err							
R-0h								R-0h							

Table 6-721. DSS_TPTC_A0_WR_BUS_SAFETY_ERR Register Field Descriptions

Bit	Field	Type	Reset	Description
31-24	ded	R	0h	
23-16	sec	R	0h	
15-8	comp_check	R	0h	
7-0	comp_err	R	0h	

6.2.6.196 DSS_TPTC_A0_WR_BUS_SAFETY_ERR_STAT_DATA0 Register (Offset = 9DCh) [reset = 0h]

DSS_TPTC_A0_WR_BUS_SAFETY_ERR_STAT_DATA0 is shown in Figure 6-716 and described in Table 6-722.

Return to the Summary Table.

Figure 6-716. DSS_TPTC_A0_WR_BUS_SAFETY_ERR_STAT_DATA0 Register

31	30	29	28	27	26	25	24	23	22	21	20	19	18	17	16	15	14	13	12	11	10	9	8	7	6	5	4	3	2	1	0
d3								d2								d1								d0							
R-0h								R-0h								R-0h								R-0h							

Table 6-722. DSS_TPTC_A0_WR_BUS_SAFETY_ERR_STAT_DATA0 Register Field Descriptions

Bit	Field	Type	Reset	Description
31-24	d3	R	0h	
23-16	d2	R	0h	
15-8	d1	R	0h	
7-0	d0	R	0h	

6.2.6.197 DSS_TPTC_A0_WR_BUS_SAFETY_ERR_STAT_CMD Register (Offset = 9E0h) [reset = 0h]

DSS_TPTC_A0_WR_BUS_SAFETY_ERR_STAT_CMD is shown in Figure 6-717 and described in Table 6-723.

Return to the Summary Table.

Figure 6-717. DSS_TPTC_A0_WR_BUS_SAFETY_ERR_STAT_CMD Register

31	30	29	28	27	26	25	24	23	22	21	20	19	18	17	16	15	14	13	12	11	10	9	8	7	6	5	4	3	2	1	0
stat																															
R-0h																															

Table 6-723. DSS_TPTC_A0_WR_BUS_SAFETY_ERR_STAT_CMD Register Field Descriptions

Bit	Field	Type	Reset	Description
31-0	stat	R	0h	

6.2.6.198 DSS_TPTC_A0_WR_BUS_SAFETY_ERR_STAT_WRITE Register (Offset = 9E4h) [reset = 0h]

DSS_TPTC_A0_WR_BUS_SAFETY_ERR_STAT_WRITE is shown in Figure 6-718 and described in Table 6-724.

Copyright © 2025 Texas Instruments Incorporated

Return to the Summary Table.

Figure 6-718. DSS_TPTC_A0_WR_BUS_SAFETY_ERR_STAT_WRITE Register

31	30	29	28	27	26	25	24	23	22	21	20	19	18	17	16	15	14	13	12	11	10	9	8	7	6	5	4	3	2	1	0
stat																															
R-0h																															

Table 6-724. DSS_TPTC_A0_WR_BUS_SAFETY_ERR_STAT_WRITE Register Field Descriptions

Bit	Field	Type	Reset	Description
31-0	stat	R	0h	

6.2.6.199 DSS_TPTC_A0_WR_BUS_SAFETY_ERR_STAT_WRITERESP Register (Offset = 9E8h) [reset = 0h]

DSS_TPTC_A0_WR_BUS_SAFETY_ERR_STAT_WRITERESP is shown in Figure 6-719 and described in Table 6-725.

Return to the Summary Table.

Figure 6-719. DSS_TPTC_A0_WR_BUS_SAFETY_ERR_STAT_WRITERESP Register

31	30	29	28	27	26	25	24	23	22	21	20	19	18	17	16	15	14	13	12	11	10	9	8	7	6	5	4	3	2	1	0
stat																															
R-0h																															

Table 6-725. DSS_TPTC_A0_WR_BUS_SAFETY_ERR_STAT_WRITERESP Register Field Descriptions

Bit	Field	Type	Reset	Description
31-0	stat	R	0h	

6.2.6.200 DSS_TPTC_A1_WR_BUS_SAFETY_CTRL Register (Offset = 9ECh) [reset = X]

DSS_TPTC_A1_WR_BUS_SAFETY_CTRL is shown in Figure 6-720 and described in Table 6-726.

Return to the Summary Table.

Figure 6-720. DSS_TPTC_A1_WR_BUS_SAFETY_CTRL Register

31	30	29	28	27	26	25	24
RESERVED							
R/W-X							
23	22	21	20	19	18	17	16
type							
R-7h							
15	14	13	12	11	10	9	8
RESERVED							err_clear
R/W-X							R/W-0h
7	6	5	4	3	2	1	0
RESERVED						enable	
R/W-X						R/W-7h	

Copyright © 2025 Texas Instruments Incorporated

Table 6-726. DSS_TPTC_A1_WR_BUS_SAFETY_CTRL Register Field Descriptions

Bit	Field	Type	Reset	Description
31-24	RESERVED	R/W	X	
23-16	type	R	7h	
15-9	RESERVED	R/W	X	
8	err_clear	R/W	0h	
7-3	RESERVED	R/W	X	
2-0	enable	R/W	7h	

6.2.6.201 DSS_TPTC_A1_WR_BUS_SAFETY_FI Register (Offset = 9F0h) [reset = X]

DSS_TPTC_A1_WR_BUS_SAFETY_FI is shown in Figure 6-721 and described in Table 6-727.

Return to the Summary Table.

Figure 6-721. DSS_TPTC_A1_WR_BUS_SAFETY_FI Register

31	30	29	28	27	26	25	24
safe							
R/W-0h							
23	22	21	20	19	18	17	16
main							
R/W-0h							
15	14	13	12	11	10	9	8
data							
R/W-0h							
7	6	5	4	3	2	1	0
RESERVED		ded	sec	global_safe_req	global_main_req	global_safe	global_main
R/W-X		R/W-0h	R/W-0h	R/W-0h	R/W-0h	R/W-0h	R/W-0h

Table 6-727. DSS_TPTC_A1_WR_BUS_SAFETY_FI Register Field Descriptions

Bit	Field	Type	Reset	Description
31-24	safe	R/W	0h	
23-16	main	R/W	0h	
15-8	data	R/W	0h	
7-6	RESERVED	R/W	X	
5	ded	R/W	0h	
4	sec	R/W	0h	
3	global_safe_req	R/W	0h	
2	global_main_req	R/W	0h	
1	global_safe	R/W	0h	
0	global_main	R/W	0h	

6.2.6.202 DSS_TPTC_A1_WR_BUS_SAFETY_ERR Register (Offset = 9F4h) [reset = 0h]

DSS_TPTC_A1_WR_BUS_SAFETY_ERR is shown in Figure 6-722 and described in Table 6-728.

Return to the Summary Table.

Copyright © 2025 Texas Instruments Incorporated

Figure 6-722. DSS_TPTC_A1_WR_BUS_SAFETY_ERR Register

31	30	29	28	27	26	25	24	23	22	21	20	19	18	17	16
ded								sec							
R-0h								R-0h							
15	14	13	12	11	10	9	8	7	6	5	4	3	2	1	0
comp_check								comp_err							
R-0h								R-0h							

Table 6-728. DSS_TPTC_A1_WR_BUS_SAFETY_ERR Register Field Descriptions

Bit	Field	Type	Reset	Description
31-24	ded	R	0h	
23-16	sec	R	0h	
15-8	comp_check	R	0h	
7-0	comp_err	R	0h	

6.2.6.203 DSS_TPTC_A1_WR_BUS_SAFETY_ERR_STAT_DATA0 Register (Offset = 9F8h) [reset = 0h]

DSS_TPTC_A1_WR_BUS_SAFETY_ERR_STAT_DATA0 is shown in Figure 6-723 and described in Table 6-729.

Return to the Summary Table.

Figure 6-723. DSS_TPTC_A1_WR_BUS_SAFETY_ERR_STAT_DATA0 Register

31	30	29	28	27	26	25	24	23	22	21	20	19	18	17	16	15	14	13	12	11	10	9	8	7	6	5	4	3	2	1	0
d3								d2								d1								d0							
R-0h								R-0h								R-0h								R-0h							

Table 6-729. DSS_TPTC_A1_WR_BUS_SAFETY_ERR_STAT_DATA0 Register Field Descriptions

Bit	Field	Type	Reset	Description
31-24	d3	R	0h	
23-16	d2	R	0h	
15-8	d1	R	0h	
7-0	d0	R	0h	

6.2.6.204 DSS_TPTC_A1_WR_BUS_SAFETY_ERR_STAT_CMD Register (Offset = 9FCh) [reset = 0h]

DSS_TPTC_A1_WR_BUS_SAFETY_ERR_STAT_CMD is shown in Figure 6-724 and described in Table 6-730.

Return to the Summary Table.

Figure 6-724. DSS_TPTC_A1_WR_BUS_SAFETY_ERR_STAT_CMD Register

31	30	29	28	27	26	25	24	23	22	21	20	19	18	17	16	15	14	13	12	11	10	9	8	7	6	5	4	3	2	1	0
stat																															
R-0h																															

Table 6-730. DSS_TPTC_A1_WR_BUS_SAFETY_ERR_STAT_CMD Register Field Descriptions

Bit	Field	Type	Reset	Description
31-0	stat	R	0h	

Copyright © 2025 Texas Instruments Incorporated

6.2.6.205 DSS_TPTC_A1_WR_BUS_SAFETY_ERR_STAT_WRITE Register (Offset = A00h) [reset = 0h]

DSS_TPTC_A1_WR_BUS_SAFETY_ERR_STAT_WRITE is shown in Figure 6-725 and described in Table 6-731.

Return to the Summary Table.

Figure 6-725. DSS_TPTC_A1_WR_BUS_SAFETY_ERR_STAT_WRITE Register

31	30	29	28	27	26	25	24	23	22	21	20	19	18	17	16	15	14	13	12	11	10	9	8	7	6	5	4	3	2	1	0
stat																															
R-0h																															

Table 6-731. DSS_TPTC_A1_WR_BUS_SAFETY_ERR_STAT_WRITE Register Field Descriptions

Bit	Field	Type	Reset	Description
31-0	stat	R	0h	

6.2.6.206 DSS_TPTC_A1_WR_BUS_SAFETY_ERR_STAT_WRITERESP Register (Offset = A04h) [reset = 0h]

DSS_TPTC_A1_WR_BUS_SAFETY_ERR_STAT_WRITERESP is shown in Figure 6-726 and described in Table 6-732.

Return to the Summary Table.

Figure 6-726. DSS_TPTC_A1_WR_BUS_SAFETY_ERR_STAT_WRITERESP Register

31	30	29	28	27	26	25	24	23	22	21	20	19	18	17	16	15	14	13	12	11	10	9	8	7	6	5	4	3	2	1	0
stat																															
R-0h																															

Table 6-732. DSS_TPTC_A1_WR_BUS_SAFETY_ERR_STAT_WRITERESP Register Field Descriptions

Bit	Field	Type	Reset	Description
31-0	stat	R	0h	

6.2.6.207 DSS_TPTC_B0_WR_BUS_SAFETY_CTRL Register (Offset = A08h) [reset = X]

DSS_TPTC_B0_WR_BUS_SAFETY_CTRL is shown in Figure 6-727 and described in Table 6-733.

Return to the Summary Table.

Figure 6-727. DSS_TPTC_B0_WR_BUS_SAFETY_CTRL Register

31	30	29	28	27	26	25	24
RESERVED							
R/W-X							
23	22	21	20	19	18	17	16
type							
R-7h							
15	14	13	12	11	10	9	8
RESERVED							err_clear
R/W-X							R/W-0h
7	6	5	4	3	2	1	0
RESERVED						enable	
R/W-X						R/W-7h	

Copyright © 2025 Texas Instruments Incorporated

Figure 6-727. DSS_TPTC_B0_WR_BUS_SAFETY_CTRL Register (continued)

Table 6-733. DSS_TPTC_B0_WR_BUS_SAFETY_CTRL Register Field Descriptions

Bit	Field	Type	Reset	Description
31-24	RESERVED	R/W	X	
23-16	type	R	7h	
15-9	RESERVED	R/W	X	
8	err_clear	R/W	0h	
7-3	RESERVED	R/W	X	
2-0	enable	R/W	7h	

6.2.6.208 DSS_TPTC_B0_WR_BUS_SAFETY_FI Register (Offset = A0Ch) [reset = X]

DSS_TPTC_B0_WR_BUS_SAFETY_FI is shown in Figure 6-728 and described in Table 6-734.

Return to the Summary Table.

Figure 6-728. DSS_TPTC_B0_WR_BUS_SAFETY_FI Register

31	30	29	28	27	26	25	24
safe							
R/W-0h							
23	22	21	20	19	18	17	16
main							
R/W-0h							
15	14	13	12	11	10	9	8
data							
R/W-0h							
7	6	5	4	3	2	1	0
RESERVED		ded	sec	global_safe_req	global_main_req	global_safe	global_main
R/W-X		R/W-0h	R/W-0h	R/W-0h	R/W-0h	R/W-0h	R/W-0h

Table 6-734. DSS_TPTC_B0_WR_BUS_SAFETY_FI Register Field Descriptions

Bit	Field	Type	Reset	Description
31-24	safe	R/W	0h	
23-16	main	R/W	0h	
15-8	data	R/W	0h	
7-6	RESERVED	R/W	X	
5	ded	R/W	0h	
4	sec	R/W	0h	
3	global_safe_req	R/W	0h	
2	global_main_req	R/W	0h	
1	global_safe	R/W	0h	
0	global_main	R/W	0h	

6.2.6.209 DSS_TPTC_B0_WR_BUS_SAFETY_ERR Register (Offset = A10h) [reset = 0h]

DSS_TPTC_B0_WR_BUS_SAFETY_ERR is shown in Figure 6-729 and described in Table 6-735.

Copyright © 2025 Texas Instruments Incorporated

Return to the Summary Table.

Figure 6-729. DSS_TPTC_B0_WR_BUS_SAFETY_ERR Register

31	30	29	28	27	26	25	24	23	22	21	20	19	18	17	16
ded								sec							
R-0h								R-0h							
15	14	13	12	11	10	9	8	7	6	5	4	3	2	1	0
comp_check								comp_err							
R-0h								R-0h							

Table 6-735. DSS_TPTC_B0_WR_BUS_SAFETY_ERR Register Field Descriptions

Bit	Field	Type	Reset	Description
31-24	ded	R	0h	
23-16	sec	R	0h	
15-8	comp_check	R	0h	
7-0	comp_err	R	0h	

6.2.6.210 DSS_TPTC_B0_WR_BUS_SAFETY_ERR_STAT_DATA0 Register (Offset = A14h) [reset = 0h]

DSS_TPTC_B0_WR_BUS_SAFETY_ERR_STAT_DATA0 is shown in Figure 6-730 and described in Table 6-736.

Return to the Summary Table.

Figure 6-730. DSS_TPTC_B0_WR_BUS_SAFETY_ERR_STAT_DATA0 Register

31	30	29	28	27	26	25	24	23	22	21	20	19	18	17	16	15	14	13	12	11	10	9	8	7	6	5	4	3	2	1	0
d3								d2								d1								d0							
R-0h								R-0h								R-0h								R-0h							

Table 6-736. DSS_TPTC_B0_WR_BUS_SAFETY_ERR_STAT_DATA0 Register Field Descriptions

Bit	Field	Type	Reset	Description
31-24	d3	R	0h	
23-16	d2	R	0h	
15-8	d1	R	0h	
7-0	d0	R	0h	

6.2.6.211 DSS_TPTC_B0_WR_BUS_SAFETY_ERR_STAT_CMD Register (Offset = A18h) [reset = 0h]

DSS_TPTC_B0_WR_BUS_SAFETY_ERR_STAT_CMD is shown in Figure 6-731 and described in Table 6-737.

Return to the Summary Table.

Figure 6-731. DSS_TPTC_B0_WR_BUS_SAFETY_ERR_STAT_CMD Register

31	30	29	28	27	26	25	24	23	22	21	20	19	18	17	16	15	14	13	12	11	10	9	8	7	6	5	4	3	2	1	0
stat																															
R-0h																															

Table 6-737. DSS_TPTC_B0_WR_BUS_SAFETY_ERR_STAT_CMD Register Field Descriptions

Bit	Field	Type	Reset	Description
31-0	stat	R	0h	

Copyright © 2025 Texas Instruments Incorporated

6.2.6.212 DSS_TPTC_B0_WR_BUS_SAFETY_ERR_STAT_WRITE Register (Offset = A1Ch) [reset = 0h]

DSS_TPTC_B0_WR_BUS_SAFETY_ERR_STAT_WRITE is shown in Figure 6-732 and described in Table 6-738.

Return to the Summary Table.

Figure 6-732. DSS_TPTC_B0_WR_BUS_SAFETY_ERR_STAT_WRITE Register

31	30	29	28	27	26	25	24	23	22	21	20	19	18	17	16	15	14	13	12	11	10	9	8	7	6	5	4	3	2	1	0
stat																															
R-0h																															

Table 6-738. DSS_TPTC_B0_WR_BUS_SAFETY_ERR_STAT_WRITE Register Field Descriptions

Bit	Field	Type	Reset	Description
31-0	stat	R	0h	

6.2.6.213 DSS_TPTC_B0_WR_BUS_SAFETY_ERR_STAT_WRITERESP Register (Offset = A20h) [reset = 0h]

DSS_TPTC_B0_WR_BUS_SAFETY_ERR_STAT_WRITERESP is shown in Figure 6-733 and described in Table 6-739.

Return to the Summary Table.

Figure 6-733. DSS_TPTC_B0_WR_BUS_SAFETY_ERR_STAT_WRITERESP Register

31	30	29	28	27	26	25	24	23	22	21	20	19	18	17	16	15	14	13	12	11	10	9	8	7	6	5	4	3	2	1	0
stat																															
R-0h																															

Table 6-739. DSS_TPTC_B0_WR_BUS_SAFETY_ERR_STAT_WRITERESP Register Field Descriptions

Bit	Field	Type	Reset	Description
31-0	stat	R	0h	

6.2.6.214 DSS_TPTC_B1_WR_BUS_SAFETY_CTRL Register (Offset = A24h) [reset = X]

DSS_TPTC_B1_WR_BUS_SAFETY_CTRL is shown in Figure 6-734 and described in Table 6-740.

Return to the Summary Table.

Figure 6-734. DSS_TPTC_B1_WR_BUS_SAFETY_CTRL Register

31	30	29	28	27	26	25	24
RESERVED							
R/W-X							
23	22	21	20	19	18	17	16
type							
R-7h							
15	14	13	12	11	10	9	8
RESERVED							err_clear
R/W-X							R/W-0h
7	6	5	4	3	2	1	0
RESERVED						enable	
R/W-X						R/W-7h	

Copyright © 2025 Texas Instruments Incorporated

Figure 6-734. DSS_TPTC_B1_WR_BUS_SAFETY_CTRL Register (continued)

Table 6-740. DSS_TPTC_B1_WR_BUS_SAFETY_CTRL Register Field Descriptions

Bit	Field	Type	Reset	Description
31-24	RESERVED	R/W	X	
23-16	type	R	7h	
15-9	RESERVED	R/W	X	
8	err_clear	R/W	0h	
7-3	RESERVED	R/W	X	
2-0	enable	R/W	7h	

6.2.6.215 DSS_TPTC_B1_WR_BUS_SAFETY_FI Register (Offset = A28h) [reset = X]

DSS_TPTC_B1_WR_BUS_SAFETY_FI is shown in Figure 6-735 and described in Table 6-741.

Return to the Summary Table.

Figure 6-735. DSS_TPTC_B1_WR_BUS_SAFETY_FI Register

31	30	29	28	27	26	25	24
safe							
R/W-0h							
23	22	21	20	19	18	17	16
main							
R/W-0h							
15	14	13	12	11	10	9	8
data							
R/W-0h							
7	6	5	4	3	2	1	0
RESERVED		ded	sec	global_safe_req	global_main_req	global_safe	global_main
R/W-X		R/W-0h	R/W-0h	R/W-0h	R/W-0h	R/W-0h	R/W-0h

Table 6-741. DSS_TPTC_B1_WR_BUS_SAFETY_FI Register Field Descriptions

Bit	Field	Type	Reset	Description
31-24	safe	R/W	0h	
23-16	main	R/W	0h	
15-8	data	R/W	0h	
7-6	RESERVED	R/W	X	
5	ded	R/W	0h	
4	sec	R/W	0h	
3	global_safe_req	R/W	0h	
2	global_main_req	R/W	0h	
1	global_safe	R/W	0h	
0	global_main	R/W	0h	

6.2.6.216 DSS_TPTC_B1_WR_BUS_SAFETY_ERR Register (Offset = A2Ch) [reset = 0h]

DSS_TPTC_B1_WR_BUS_SAFETY_ERR is shown in Figure 6-736 and described in Table 6-742.

Copyright © 2025 Texas Instruments Incorporated

Return to the Summary Table.

Figure 6-736. DSS_TPTC_B1_WR_BUS_SAFETY_ERR Register

31	30	29	28	27	26	25	24	23	22	21	20	19	18	17	16
ded								sec							
R-0h								R-0h							
15	14	13	12	11	10	9	8	7	6	5	4	3	2	1	0
comp_check								comp_err							
R-0h								R-0h							

Table 6-742. DSS_TPTC_B1_WR_BUS_SAFETY_ERR Register Field Descriptions

Bit	Field	Type	Reset	Description
31-24	ded	R	0h	
23-16	sec	R	0h	
15-8	comp_check	R	0h	
7-0	comp_err	R	0h	

6.2.6.217 DSS_TPTC_B1_WR_BUS_SAFETY_ERR_STAT_DATA0 Register (Offset = A30h) [reset = 0h]

DSS_TPTC_B1_WR_BUS_SAFETY_ERR_STAT_DATA0 is shown in Figure 6-737 and described in Table 6-743.

Return to the Summary Table.

Figure 6-737. DSS_TPTC_B1_WR_BUS_SAFETY_ERR_STAT_DATA0 Register

31	30	29	28	27	26	25	24	23	22	21	20	19	18	17	16	15	14	13	12	11	10	9	8	7	6	5	4	3	2	1	0
d3								d2								d1								d0							
R-0h								R-0h								R-0h								R-0h							

Table 6-743. DSS_TPTC_B1_WR_BUS_SAFETY_ERR_STAT_DATA0 Register Field Descriptions

Bit	Field	Type	Reset	Description
31-24	d3	R	0h	
23-16	d2	R	0h	
15-8	d1	R	0h	
7-0	d0	R	0h	

6.2.6.218 DSS_TPTC_B1_WR_BUS_SAFETY_ERR_STAT_CMD Register (Offset = A34h) [reset = 0h]

DSS_TPTC_B1_WR_BUS_SAFETY_ERR_STAT_CMD is shown in Figure 6-738 and described in Table 6-744.

Return to the Summary Table.

Figure 6-738. DSS_TPTC_B1_WR_BUS_SAFETY_ERR_STAT_CMD Register

31	30	29	28	27	26	25	24	23	22	21	20	19	18	17	16	15	14	13	12	11	10	9	8	7	6	5	4	3	2	1	0
stat																															
R-0h																															

Table 6-744. DSS_TPTC_B1_WR_BUS_SAFETY_ERR_STAT_CMD Register Field Descriptions

Bit	Field	Type	Reset	Description
31-0	stat	R	0h	

Copyright © 2025 Texas Instruments Incorporated

6.2.6.219 DSS_TPTC_B1_WR_BUS_SAFETY_ERR_STAT_WRITE Register (Offset = A38h) [reset = 0h]

DSS_TPTC_B1_WR_BUS_SAFETY_ERR_STAT_WRITE is shown in Figure 6-739 and described in Table 6-745.

Return to the Summary Table.

Figure 6-739. DSS_TPTC_B1_WR_BUS_SAFETY_ERR_STAT_WRITE Register

31	30	29	28	27	26	25	24	23	22	21	20	19	18	17	16	15	14	13	12	11	10	9	8	7	6	5	4	3	2	1	0
stat																															
R-0h																															

Table 6-745. DSS_TPTC_B1_WR_BUS_SAFETY_ERR_STAT_WRITE Register Field Descriptions

Bit	Field	Type	Reset	Description
31-0	stat	R	0h	

6.2.6.220 DSS_TPTC_B1_WR_BUS_SAFETY_ERR_STAT_WRITERESP Register (Offset = A3Ch) [reset = 0h]

DSS_TPTC_B1_WR_BUS_SAFETY_ERR_STAT_WRITERESP is shown in Figure 6-740 and described in Table 6-746.

Return to the Summary Table.

Figure 6-740. DSS_TPTC_B1_WR_BUS_SAFETY_ERR_STAT_WRITERESP Register

31	30	29	28	27	26	25	24	23	22	21	20	19	18	17	16	15	14	13	12	11	10	9	8	7	6	5	4	3	2	1	0
stat																															
R-0h																															

Table 6-746. DSS_TPTC_B1_WR_BUS_SAFETY_ERR_STAT_WRITERESP Register Field Descriptions

Bit	Field	Type	Reset	Description
31-0	stat	R	0h	

6.2.6.221 DSS_TPTC_C0_WR_BUS_SAFETY_CTRL Register (Offset = A40h) [reset = X]

DSS_TPTC_C0_WR_BUS_SAFETY_CTRL is shown in Figure 6-741 and described in Table 6-747.

Return to the Summary Table.

Figure 6-741. DSS_TPTC_C0_WR_BUS_SAFETY_CTRL Register

31	30	29	28	27	26	25	24
RESERVED							
R/W-X							
23	22	21	20	19	18	17	16
type							
R-7h							
15	14	13	12	11	10	9	8
RESERVED							err_clear
R/W-X							R/W-0h
7	6	5	4	3	2	1	0
RESERVED						enable	
R/W-X						R/W-7h	

Copyright © 2025 Texas Instruments Incorporated

Figure 6-741. DSS_TPTC_C0_WR_BUS_SAFETY_CTRL Register (continued)

Table 6-747. DSS_TPTC_C0_WR_BUS_SAFETY_CTRL Register Field Descriptions

Bit	Field	Type	Reset	Description
31-24	RESERVED	R/W	X	
23-16	type	R	7h	
15-9	RESERVED	R/W	X	
8	err_clear	R/W	0h	
7-3	RESERVED	R/W	X	
2-0	enable	R/W	7h	

6.2.6.222 DSS_TPTC_C0_WR_BUS_SAFETY_FI Register (Offset = A44h) [reset = X]

DSS_TPTC_C0_WR_BUS_SAFETY_FI is shown in Figure 6-742 and described in Table 6-748.

Return to the Summary Table.

Figure 6-742. DSS_TPTC_C0_WR_BUS_SAFETY_FI Register

31	30	29	28	27	26	25	24
safe							
R/W-0h							
23	22	21	20	19	18	17	16
main							
R/W-0h							
15	14	13	12	11	10	9	8
data							
R/W-0h							
7	6	5	4	3	2	1	0
RESERVED		ded	sec	global_safe_req	global_main_req	global_safe	global_main
R/W-X		R/W-0h	R/W-0h	R/W-0h	R/W-0h	R/W-0h	R/W-0h

Table 6-748. DSS_TPTC_C0_WR_BUS_SAFETY_FI Register Field Descriptions

Bit	Field	Type	Reset	Description
31-24	safe	R/W	0h	
23-16	main	R/W	0h	
15-8	data	R/W	0h	
7-6	RESERVED	R/W	X	
5	ded	R/W	0h	
4	sec	R/W	0h	
3	global_safe_req	R/W	0h	
2	global_main_req	R/W	0h	
1	global_safe	R/W	0h	
0	global_main	R/W	0h	

6.2.6.223 DSS_TPTC_C0_WR_BUS_SAFETY_ERR Register (Offset = A48h) [reset = 0h]

DSS_TPTC_C0_WR_BUS_SAFETY_ERR is shown in Figure 6-743 and described in Table 6-749.

Copyright © 2025 Texas Instruments Incorporated

Return to the Summary Table.

Figure 6-743. DSS_TPTC_C0_WR_BUS_SAFETY_ERR Register

31	30	29	28	27	26	25	24	23	22	21	20	19	18	17	16
ded								sec							
R-0h								R-0h							
15	14	13	12	11	10	9	8	7	6	5	4	3	2	1	0
comp_check								comp_err							
R-0h								R-0h							

Table 6-749. DSS_TPTC_C0_WR_BUS_SAFETY_ERR Register Field Descriptions

Bit	Field	Type	Reset	Description
31-24	ded	R	0h	
23-16	sec	R	0h	
15-8	comp_check	R	0h	
7-0	comp_err	R	0h	

6.2.6.224 DSS_TPTC_C0_WR_BUS_SAFETY_ERR_STAT_DATA0 Register (Offset = A4Ch) [reset = 0h]

DSS_TPTC_C0_WR_BUS_SAFETY_ERR_STAT_DATA0 is shown in Figure 6-744 and described in Table 6-750.

Return to the Summary Table.

Figure 6-744. DSS_TPTC_C0_WR_BUS_SAFETY_ERR_STAT_DATA0 Register

31	30	29	28	27	26	25	24	23	22	21	20	19	18	17	16	15	14	13	12	11	10	9	8	7	6	5	4	3	2	1	0
d3								d2								d1								d0							
R-0h								R-0h								R-0h								R-0h							

Table 6-750. DSS_TPTC_C0_WR_BUS_SAFETY_ERR_STAT_DATA0 Register Field Descriptions

Bit	Field	Type	Reset	Description
31-24	d3	R	0h	
23-16	d2	R	0h	
15-8	d1	R	0h	
7-0	d0	R	0h	

6.2.6.225 DSS_TPTC_C0_WR_BUS_SAFETY_ERR_STAT_CMD Register (Offset = A50h) [reset = 0h]

DSS_TPTC_C0_WR_BUS_SAFETY_ERR_STAT_CMD is shown in Figure 6-745 and described in Table 6-751.

Return to the Summary Table.

Figure 6-745. DSS_TPTC_C0_WR_BUS_SAFETY_ERR_STAT_CMD Register

31	30	29	28	27	26	25	24	23	22	21	20	19	18	17	16	15	14	13	12	11	10	9	8	7	6	5	4	3	2	1	0
stat																															
R-0h																															

Table 6-751. DSS_TPTC_C0_WR_BUS_SAFETY_ERR_STAT_CMD Register Field Descriptions

Bit	Field	Type	Reset	Description
31-0	stat	R	0h	

Copyright © 2025 Texas Instruments Incorporated

6.2.6.226 DSS_TPTC_C0_WR_BUS_SAFETY_ERR_STAT_WRITE Register (Offset = A54h) [reset = 0h]

DSS_TPTC_C0_WR_BUS_SAFETY_ERR_STAT_WRITE is shown in Figure 6-746 and described in Table 6-752.

Return to the Summary Table.

Figure 6-746. DSS_TPTC_C0_WR_BUS_SAFETY_ERR_STAT_WRITE Register

31	30	29	28	27	26	25	24	23	22	21	20	19	18	17	16	15	14	13	12	11	10	9	8	7	6	5	4	3	2	1	0
stat																															
R-0h																															

Table 6-752. DSS_TPTC_C0_WR_BUS_SAFETY_ERR_STAT_WRITE Register Field Descriptions

Bit	Field	Type	Reset	Description
31-0	stat	R	0h	

6.2.6.227 DSS_TPTC_C0_WR_BUS_SAFETY_ERR_STAT_WRITERESP Register (Offset = A58h) [reset = 0h]

DSS_TPTC_C0_WR_BUS_SAFETY_ERR_STAT_WRITERESP is shown in Figure 6-747 and described in Table 6-753.

Return to the Summary Table.

Figure 6-747. DSS_TPTC_C0_WR_BUS_SAFETY_ERR_STAT_WRITERESP Register

31	30	29	28	27	26	25	24	23	22	21	20	19	18	17	16	15	14	13	12	11	10	9	8	7	6	5	4	3	2	1	0
stat																															
R-0h																															

Table 6-753. DSS_TPTC_C0_WR_BUS_SAFETY_ERR_STAT_WRITERESP Register Field Descriptions

Bit	Field	Type	Reset	Description
31-0	stat	R	0h	

6.2.6.228 DSS_TPTC_C1_WR_BUS_SAFETY_CTRL Register (Offset = A5Ch) [reset = X]

DSS_TPTC_C1_WR_BUS_SAFETY_CTRL is shown in Figure 6-748 and described in Table 6-754.

Return to the Summary Table.

Figure 6-748. DSS_TPTC_C1_WR_BUS_SAFETY_CTRL Register

31	30	29	28	27	26	25	24
RESERVED							
R/W-X							
23	22	21	20	19	18	17	16
type							
R-7h							
15	14	13	12	11	10	9	8
RESERVED							err_clear
R/W-X							R/W-0h
7	6	5	4	3	2	1	0
RESERVED						enable	
R/W-X						R/W-7h	

Copyright © 2025 Texas Instruments Incorporated

Figure 6-748. DSS_TPTC_C1_WR_BUS_SAFETY_CTRL Register (continued)

Table 6-754. DSS_TPTC_C1_WR_BUS_SAFETY_CTRL Register Field Descriptions

Bit	Field	Type	Reset	Description
31-24	RESERVED	R/W	X	
23-16	type	R	7h	
15-9	RESERVED	R/W	X	
8	err_clear	R/W	0h	
7-3	RESERVED	R/W	X	
2-0	enable	R/W	7h	

6.2.6.229 DSS_TPTC_C1_WR_BUS_SAFETY_FI Register (Offset = A60h) [reset = X]

DSS_TPTC_C1_WR_BUS_SAFETY_FI is shown in Figure 6-749 and described in Table 6-755.

Return to the Summary Table.

Figure 6-749. DSS_TPTC_C1_WR_BUS_SAFETY_FI Register

31	30	29	28	27	26	25	24
safe							
R/W-0h							
23	22	21	20	19	18	17	16
main							
R/W-0h							
15	14	13	12	11	10	9	8
data							
R/W-0h							
7	6	5	4	3	2	1	0
RESERVED		ded	sec	global_safe_req	global_main_req	global_safe	global_main
R/W-X		R/W-0h	R/W-0h	R/W-0h	R/W-0h	R/W-0h	R/W-0h

Table 6-755. DSS_TPTC_C1_WR_BUS_SAFETY_FI Register Field Descriptions

Bit	Field	Type	Reset	Description
31-24	safe	R/W	0h	
23-16	main	R/W	0h	
15-8	data	R/W	0h	
7-6	RESERVED	R/W	X	
5	ded	R/W	0h	
4	sec	R/W	0h	
3	global_safe_req	R/W	0h	
2	global_main_req	R/W	0h	
1	global_safe	R/W	0h	
0	global_main	R/W	0h	

6.2.6.230 DSS_TPTC_C1_WR_BUS_SAFETY_ERR Register (Offset = A64h) [reset = 0h]

DSS_TPTC_C1_WR_BUS_SAFETY_ERR is shown in Figure 6-750 and described in Table 6-756.

Copyright © 2025 Texas Instruments Incorporated

Return to the Summary Table.

Figure 6-750. DSS_TPTC_C1_WR_BUS_SAFETY_ERR Register

31	30	29	28	27	26	25	24	23	22	21	20	19	18	17	16
ded								sec							
R-0h								R-0h							
15	14	13	12	11	10	9	8	7	6	5	4	3	2	1	0
comp_check								comp_err							
R-0h								R-0h							

Table 6-756. DSS_TPTC_C1_WR_BUS_SAFETY_ERR Register Field Descriptions

Bit	Field	Type	Reset	Description
31-24	ded	R	0h	
23-16	sec	R	0h	
15-8	comp_check	R	0h	
7-0	comp_err	R	0h	

6.2.6.231 DSS_TPTC_C1_WR_BUS_SAFETY_ERR_STAT_DATA0 Register (Offset = A68h) [reset = 0h]

DSS_TPTC_C1_WR_BUS_SAFETY_ERR_STAT_DATA0 is shown in Figure 6-751 and described in Table 6-757.

Return to the Summary Table.

Figure 6-751. DSS_TPTC_C1_WR_BUS_SAFETY_ERR_STAT_DATA0 Register

31	30	29	28	27	26	25	24	23	22	21	20	19	18	17	16	15	14	13	12	11	10	9	8	7	6	5	4	3	2	1	0
d3								d2								d1								d0							
R-0h								R-0h								R-0h								R-0h							

Table 6-757. DSS_TPTC_C1_WR_BUS_SAFETY_ERR_STAT_DATA0 Register Field Descriptions

Bit	Field	Type	Reset	Description
31-24	d3	R	0h	
23-16	d2	R	0h	
15-8	d1	R	0h	
7-0	d0	R	0h	

6.2.6.232 DSS_TPTC_C1_WR_BUS_SAFETY_ERR_STAT_CMD Register (Offset = A6Ch) [reset = 0h]

DSS_TPTC_C1_WR_BUS_SAFETY_ERR_STAT_CMD is shown in Figure 6-752 and described in Table 6-758.

Return to the Summary Table.

Figure 6-752. DSS_TPTC_C1_WR_BUS_SAFETY_ERR_STAT_CMD Register

31	30	29	28	27	26	25	24	23	22	21	20	19	18	17	16	15	14	13	12	11	10	9	8	7	6	5	4	3	2	1	0
stat																															
R-0h																															

Table 6-758. DSS_TPTC_C1_WR_BUS_SAFETY_ERR_STAT_CMD Register Field Descriptions

Bit	Field	Type	Reset	Description
31-0	stat	R	0h	

Copyright © 2025 Texas Instruments Incorporated

6.2.6.233 DSS_TPTC_C1_WR_BUS_SAFETY_ERR_STAT_WRITE Register (Offset = A70h) [reset = 0h]

DSS_TPTC_C1_WR_BUS_SAFETY_ERR_STAT_WRITE is shown in Figure 6-753 and described in Table 6-759.

Return to the Summary Table.

Figure 6-753. DSS_TPTC_C1_WR_BUS_SAFETY_ERR_STAT_WRITE Register

31	30	29	28	27	26	25	24	23	22	21	20	19	18	17	16	15	14	13	12	11	10	9	8	7	6	5	4	3	2	1	0
stat																															
R-0h																															

Table 6-759. DSS_TPTC_C1_WR_BUS_SAFETY_ERR_STAT_WRITE Register Field Descriptions

Bit	Field	Type	Reset	Description
31-0	stat	R	0h	

6.2.6.234 DSS_TPTC_C1_WR_BUS_SAFETY_ERR_STAT_WRITERESP Register (Offset = A74h) [reset = 0h]

DSS_TPTC_C1_WR_BUS_SAFETY_ERR_STAT_WRITERESP is shown in Figure 6-754 and described in Table 6-760.

Return to the Summary Table.

Figure 6-754. DSS_TPTC_C1_WR_BUS_SAFETY_ERR_STAT_WRITERESP Register

31	30	29	28	27	26	25	24	23	22	21	20	19	18	17	16	15	14	13	12	11	10	9	8	7	6	5	4	3	2	1	0
stat																															
R-0h																															

Table 6-760. DSS_TPTC_C1_WR_BUS_SAFETY_ERR_STAT_WRITERESP Register Field Descriptions

Bit	Field	Type	Reset	Description
31-0	stat	R	0h	

6.2.6.235 DSS_TPTC_C2_WR_BUS_SAFETY_CTRL Register (Offset = A78h) [reset = X]

DSS_TPTC_C2_WR_BUS_SAFETY_CTRL is shown in Figure 6-755 and described in Table 6-761.

Return to the Summary Table.

Figure 6-755. DSS_TPTC_C2_WR_BUS_SAFETY_CTRL Register

31	30	29	28	27	26	25	24
RESERVED							
R/W-X							
23	22	21	20	19	18	17	16
type							
R-7h							
15	14	13	12	11	10	9	8
RESERVED							err_clear
R/W-X							R/W-0h
7	6	5	4	3	2	1	0
RESERVED						enable	
R/W-X						R/W-7h	

Copyright © 2025 Texas Instruments Incorporated

Figure 6-755. DSS_TPTC_C2_WR_BUS_SAFETY_CTRL Register (continued)

Table 6-761. DSS_TPTC_C2_WR_BUS_SAFETY_CTRL Register Field Descriptions

Bit	Field	Type	Reset	Description
31-24	RESERVED	R/W	X	
23-16	type	R	7h	
15-9	RESERVED	R/W	X	
8	err_clear	R/W	0h	
7-3	RESERVED	R/W	X	
2-0	enable	R/W	7h	

6.2.6.236 DSS_TPTC_C2_WR_BUS_SAFETY_FI Register (Offset = A7Ch) [reset = X]

DSS_TPTC_C2_WR_BUS_SAFETY_FI is shown in Figure 6-756 and described in Table 6-762.

Return to the Summary Table.

Figure 6-756. DSS_TPTC_C2_WR_BUS_SAFETY_FI Register

31	30	29	28	27	26	25	24
safe							
R/W-0h							
23	22	21	20	19	18	17	16
main							
R/W-0h							
15	14	13	12	11	10	9	8
data							
R/W-0h							
7	6	5	4	3	2	1	0
RESERVED		ded	sec	global_safe_req	global_main_req	global_safe	global_main
R/W-X		R/W-0h	R/W-0h	R/W-0h	R/W-0h	R/W-0h	R/W-0h

Table 6-762. DSS_TPTC_C2_WR_BUS_SAFETY_FI Register Field Descriptions

Bit	Field	Type	Reset	Description
31-24	safe	R/W	0h	
23-16	main	R/W	0h	
15-8	data	R/W	0h	
7-6	RESERVED	R/W	X	
5	ded	R/W	0h	
4	sec	R/W	0h	
3	global_safe_req	R/W	0h	
2	global_main_req	R/W	0h	
1	global_safe	R/W	0h	
0	global_main	R/W	0h	

6.2.6.237 DSS_TPTC_C2_WR_BUS_SAFETY_ERR Register (Offset = A80h) [reset = 0h]

DSS_TPTC_C2_WR_BUS_SAFETY_ERR is shown in Figure 6-757 and described in Table 6-763.

Copyright © 2025 Texas Instruments Incorporated

Return to the Summary Table.

Figure 6-757. DSS_TPTC_C2_WR_BUS_SAFETY_ERR Register

31	30	29	28	27	26	25	24	23	22	21	20	19	18	17	16
ded								sec							
R-0h								R-0h							
15	14	13	12	11	10	9	8	7	6	5	4	3	2	1	0
comp_check								comp_err							
R-0h								R-0h							

Table 6-763. DSS_TPTC_C2_WR_BUS_SAFETY_ERR Register Field Descriptions

Bit	Field	Type	Reset	Description
31-24	ded	R	0h	
23-16	sec	R	0h	
15-8	comp_check	R	0h	
7-0	comp_err	R	0h	

6.2.6.238 DSS_TPTC_C2_WR_BUS_SAFETY_ERR_STAT_DATA0 Register (Offset = A84h) [reset = 0h]

DSS_TPTC_C2_WR_BUS_SAFETY_ERR_STAT_DATA0 is shown in Figure 6-758 and described in Table 6-764.

Return to the Summary Table.

Figure 6-758. DSS_TPTC_C2_WR_BUS_SAFETY_ERR_STAT_DATA0 Register

31	30	29	28	27	26	25	24	23	22	21	20	19	18	17	16	15	14	13	12	11	10	9	8	7	6	5	4	3	2	1	0
d3								d2								d1								d0							
R-0h								R-0h								R-0h								R-0h							

Table 6-764. DSS_TPTC_C2_WR_BUS_SAFETY_ERR_STAT_DATA0 Register Field Descriptions

Bit	Field	Type	Reset	Description
31-24	d3	R	0h	
23-16	d2	R	0h	
15-8	d1	R	0h	
7-0	d0	R	0h	

6.2.6.239 DSS_TPTC_C2_WR_BUS_SAFETY_ERR_STAT_CMD Register (Offset = A88h) [reset = 0h]

DSS_TPTC_C2_WR_BUS_SAFETY_ERR_STAT_CMD is shown in Figure 6-759 and described in Table 6-765.

Return to the Summary Table.

Figure 6-759. DSS_TPTC_C2_WR_BUS_SAFETY_ERR_STAT_CMD Register

31	30	29	28	27	26	25	24	23	22	21	20	19	18	17	16	15	14	13	12	11	10	9	8	7	6	5	4	3	2	1	0
stat																															
R-0h																															

Table 6-765. DSS_TPTC_C2_WR_BUS_SAFETY_ERR_STAT_CMD Register Field Descriptions

Bit	Field	Type	Reset	Description
31-0	stat	R	0h	

Copyright © 2025 Texas Instruments Incorporated

6.2.6.240 DSS_TPTC_C2_WR_BUS_SAFETY_ERR_STAT_WRITE Register (Offset = A8Ch) [reset = 0h]

DSS_TPTC_C2_WR_BUS_SAFETY_ERR_STAT_WRITE is shown in Figure 6-760 and described in Table 6-766.

Return to the Summary Table.

Figure 6-760. DSS_TPTC_C2_WR_BUS_SAFETY_ERR_STAT_WRITE Register

31	30	29	28	27	26	25	24	23	22	21	20	19	18	17	16	15	14	13	12	11	10	9	8	7	6	5	4	3	2	1	0
stat																															
R-0h																															

Table 6-766. DSS_TPTC_C2_WR_BUS_SAFETY_ERR_STAT_WRITE Register Field Descriptions

Bit	Field	Type	Reset	Description
31-0	stat	R	0h	

6.2.6.241 DSS_TPTC_C2_WR_BUS_SAFETY_ERR_STAT_WRITERESP Register (Offset = A90h) [reset = 0h]

DSS_TPTC_C2_WR_BUS_SAFETY_ERR_STAT_WRITERESP is shown in Figure 6-761 and described in Table 6-767.

Return to the Summary Table.

Figure 6-761. DSS_TPTC_C2_WR_BUS_SAFETY_ERR_STAT_WRITERESP Register

31	30	29	28	27	26	25	24	23	22	21	20	19	18	17	16	15	14	13	12	11	10	9	8	7	6	5	4	3	2	1	0
stat																															
R-0h																															

Table 6-767. DSS_TPTC_C2_WR_BUS_SAFETY_ERR_STAT_WRITERESP Register Field Descriptions

Bit	Field	Type	Reset	Description
31-0	stat	R	0h	

6.2.6.242 DSS_TPTC_C3_WR_BUS_SAFETY_CTRL Register (Offset = A94h) [reset = X]

DSS_TPTC_C3_WR_BUS_SAFETY_CTRL is shown in Figure 6-762 and described in Table 6-768.

Return to the Summary Table.

Figure 6-762. DSS_TPTC_C3_WR_BUS_SAFETY_CTRL Register

31	30	29	28	27	26	25	24
RESERVED							
R/W-X							
23	22	21	20	19	18	17	16
type							
R-7h							
15	14	13	12	11	10	9	8
RESERVED							err_clear
R/W-X							R/W-0h
7	6	5	4	3	2	1	0
RESERVED						enable	
R/W-X						R/W-7h	

Copyright © 2025 Texas Instruments Incorporated

Figure 6-762. DSS_TPTC_C3_WR_BUS_SAFETY_CTRL Register (continued)

Table 6-768. DSS_TPTC_C3_WR_BUS_SAFETY_CTRL Register Field Descriptions

Bit	Field	Type	Reset	Description
31-24	RESERVED	R/W	X	
23-16	type	R	7h	
15-9	RESERVED	R/W	X	
8	err_clear	R/W	0h	
7-3	RESERVED	R/W	X	
2-0	enable	R/W	7h	

6.2.6.243 DSS_TPTC_C3_WR_BUS_SAFETY_FI Register (Offset = A98h) [reset = X]

DSS_TPTC_C3_WR_BUS_SAFETY_FI is shown in Figure 6-763 and described in Table 6-769.

Return to the Summary Table.

Figure 6-763. DSS_TPTC_C3_WR_BUS_SAFETY_FI Register

31	30	29	28	27	26	25	24
safe							
R/W-0h							
23	22	21	20	19	18	17	16
main							
R/W-0h							
15	14	13	12	11	10	9	8
data							
R/W-0h							
7	6	5	4	3	2	1	0
RESERVED		ded	sec	global_safe_req	global_main_req	global_safe	global_main
R/W-X		R/W-0h	R/W-0h	R/W-0h	R/W-0h	R/W-0h	R/W-0h

Table 6-769. DSS_TPTC_C3_WR_BUS_SAFETY_FI Register Field Descriptions

Bit	Field	Type	Reset	Description
31-24	safe	R/W	0h	
23-16	main	R/W	0h	
15-8	data	R/W	0h	
7-6	RESERVED	R/W	X	
5	ded	R/W	0h	
4	sec	R/W	0h	
3	global_safe_req	R/W	0h	
2	global_main_req	R/W	0h	
1	global_safe	R/W	0h	
0	global_main	R/W	0h	

6.2.6.244 DSS_TPTC_C3_WR_BUS_SAFETY_ERR Register (Offset = A9Ch) [reset = 0h]

DSS_TPTC_C3_WR_BUS_SAFETY_ERR is shown in Figure 6-764 and described in Table 6-770.

Copyright © 2025 Texas Instruments Incorporated

Return to the Summary Table.

Figure 6-764. DSS_TPTC_C3_WR_BUS_SAFETY_ERR Register

31	30	29	28	27	26	25	24	23	22	21	20	19	18	17	16
ded								sec							
R-0h								R-0h							
15	14	13	12	11	10	9	8	7	6	5	4	3	2	1	0
comp_check								comp_err							
R-0h								R-0h							

Table 6-770. DSS_TPTC_C3_WR_BUS_SAFETY_ERR Register Field Descriptions

Bit	Field	Type	Reset	Description
31-24	ded	R	0h	
23-16	sec	R	0h	
15-8	comp_check	R	0h	
7-0	comp_err	R	0h	

6.2.6.245 DSS_TPTC_C3_WR_BUS_SAFETY_ERR_STAT_DATA0 Register (Offset = AA0h) [reset = 0h]

DSS_TPTC_C3_WR_BUS_SAFETY_ERR_STAT_DATA0 is shown in Figure 6-765 and described in Table 6-771.

Return to the Summary Table.

Figure 6-765. DSS_TPTC_C3_WR_BUS_SAFETY_ERR_STAT_DATA0 Register

31	30	29	28	27	26	25	24	23	22	21	20	19	18	17	16	15	14	13	12	11	10	9	8	7	6	5	4	3	2	1	0
d3								d2								d1								d0							
R-0h								R-0h								R-0h								R-0h							

Table 6-771. DSS_TPTC_C3_WR_BUS_SAFETY_ERR_STAT_DATA0 Register Field Descriptions

Bit	Field	Type	Reset	Description
31-24	d3	R	0h	
23-16	d2	R	0h	
15-8	d1	R	0h	
7-0	d0	R	0h	

6.2.6.246 DSS_TPTC_C3_WR_BUS_SAFETY_ERR_STAT_CMD Register (Offset = AA4h) [reset = 0h]

DSS_TPTC_C3_WR_BUS_SAFETY_ERR_STAT_CMD is shown in Figure 6-766 and described in Table 6-772.

Return to the Summary Table.

Figure 6-766. DSS_TPTC_C3_WR_BUS_SAFETY_ERR_STAT_CMD Register

31	30	29	28	27	26	25	24	23	22	21	20	19	18	17	16	15	14	13	12	11	10	9	8	7	6	5	4	3	2	1	0
stat																															
R-0h																															

Table 6-772. DSS_TPTC_C3_WR_BUS_SAFETY_ERR_STAT_CMD Register Field Descriptions

Bit	Field	Type	Reset	Description
31-0	stat	R	0h	

Copyright © 2025 Texas Instruments Incorporated

6.2.6.247 DSS_TPTC_C3_WR_BUS_SAFETY_ERR_STAT_WRITE Register (Offset = AA8h) [reset = 0h]

DSS_TPTC_C3_WR_BUS_SAFETY_ERR_STAT_WRITE is shown in Figure 6-767 and described in Table 6-773.

Return to the Summary Table.

Figure 6-767. DSS_TPTC_C3_WR_BUS_SAFETY_ERR_STAT_WRITE Register

31	30	29	28	27	26	25	24	23	22	21	20	19	18	17	16	15	14	13	12	11	10	9	8	7	6	5	4	3	2	1	0
stat																															
R-0h																															

Table 6-773. DSS_TPTC_C3_WR_BUS_SAFETY_ERR_STAT_WRITE Register Field Descriptions

Bit	Field	Type	Reset	Description
31-0	stat	R	0h	

6.2.6.248 DSS_TPTC_C3_WR_BUS_SAFETY_ERR_STAT_WRITERESP Register (Offset = AACh) [reset = 0h]

DSS_TPTC_C3_WR_BUS_SAFETY_ERR_STAT_WRITERESP is shown in Figure 6-768 and described in Table 6-774.

Return to the Summary Table.

Figure 6-768. DSS_TPTC_C3_WR_BUS_SAFETY_ERR_STAT_WRITERESP Register

31	30	29	28	27	26	25	24	23	22	21	20	19	18	17	16	15	14	13	12	11	10	9	8	7	6	5	4	3	2	1	0
stat																															
R-0h																															

Table 6-774. DSS_TPTC_C3_WR_BUS_SAFETY_ERR_STAT_WRITERESP Register Field Descriptions

Bit	Field	Type	Reset	Description
31-0	stat	R	0h	

6.2.6.249 DSS_TPTC_C4_WR_BUS_SAFETY_CTRL Register (Offset = AB0h) [reset = X]

DSS_TPTC_C4_WR_BUS_SAFETY_CTRL is shown in Figure 6-769 and described in Table 6-775.

Return to the Summary Table.

Figure 6-769. DSS_TPTC_C4_WR_BUS_SAFETY_CTRL Register

31	30	29	28	27	26	25	24
RESERVED							
R/W-X							
23	22	21	20	19	18	17	16
type							
R-7h							
15	14	13	12	11	10	9	8
RESERVED							err_clear
R/W-X							R/W-0h
7	6	5	4	3	2	1	0
RESERVED						enable	
R/W-X						R/W-7h	

Copyright © 2025 Texas Instruments Incorporated

Figure 6-769. DSS_TPTC_C4_WR_BUS_SAFETY_CTRL Register (continued)

Table 6-775. DSS_TPTC_C4_WR_BUS_SAFETY_CTRL Register Field Descriptions

Bit	Field	Type	Reset	Description
31-24	RESERVED	R/W	X	
23-16	type	R	7h	
15-9	RESERVED	R/W	X	
8	err_clear	R/W	0h	
7-3	RESERVED	R/W	X	
2-0	enable	R/W	7h	

6.2.6.250 DSS_TPTC_C4_WR_BUS_SAFETY_FI Register (Offset = AB4h) [reset = X]

DSS_TPTC_C4_WR_BUS_SAFETY_FI is shown in Figure 6-770 and described in Table 6-776.

Return to the Summary Table.

Figure 6-770. DSS_TPTC_C4_WR_BUS_SAFETY_FI Register

31	30	29	28	27	26	25	24
safe							
R/W-0h							
23	22	21	20	19	18	17	16
main							
R/W-0h							
15	14	13	12	11	10	9	8
data							
R/W-0h							
7	6	5	4	3	2	1	0
RESERVED		ded	sec	global_safe_req	global_main_req	global_safe	global_main
R/W-X		R/W-0h	R/W-0h	R/W-0h	R/W-0h	R/W-0h	R/W-0h

Table 6-776. DSS_TPTC_C4_WR_BUS_SAFETY_FI Register Field Descriptions

Bit	Field	Type	Reset	Description
31-24	safe	R/W	0h	
23-16	main	R/W	0h	
15-8	data	R/W	0h	
7-6	RESERVED	R/W	X	
5	ded	R/W	0h	
4	sec	R/W	0h	
3	global_safe_req	R/W	0h	
2	global_main_req	R/W	0h	
1	global_safe	R/W	0h	
0	global_main	R/W	0h	

6.2.6.251 DSS_TPTC_C4_WR_BUS_SAFETY_ERR Register (Offset = AB8h) [reset = 0h]

DSS_TPTC_C4_WR_BUS_SAFETY_ERR is shown in Figure 6-771 and described in Table 6-777.

Copyright © 2025 Texas Instruments Incorporated

Return to the Summary Table.

Figure 6-771. DSS_TPTC_C4_WR_BUS_SAFETY_ERR Register

31	30	29	28	27	26	25	24	23	22	21	20	19	18	17	16
ded								sec							
R-0h								R-0h							
15	14	13	12	11	10	9	8	7	6	5	4	3	2	1	0
comp_check								comp_err							
R-0h								R-0h							

Table 6-777. DSS_TPTC_C4_WR_BUS_SAFETY_ERR Register Field Descriptions

Bit	Field	Type	Reset	Description
31-24	ded	R	0h	
23-16	sec	R	0h	
15-8	comp_check	R	0h	
7-0	comp_err	R	0h	

6.2.6.252 DSS_TPTC_C4_WR_BUS_SAFETY_ERR_STAT_DATA0 Register (Offset = ABCh) [reset = 0h]

DSS_TPTC_C4_WR_BUS_SAFETY_ERR_STAT_DATA0 is shown in Figure 6-772 and described in Table 6-778.

Return to the Summary Table.

Figure 6-772. DSS_TPTC_C4_WR_BUS_SAFETY_ERR_STAT_DATA0 Register

31	30	29	28	27	26	25	24	23	22	21	20	19	18	17	16	15	14	13	12	11	10	9	8	7	6	5	4	3	2	1	0
d3								d2								d1								d0							
R-0h								R-0h								R-0h								R-0h							

Table 6-778. DSS_TPTC_C4_WR_BUS_SAFETY_ERR_STAT_DATA0 Register Field Descriptions

Bit	Field	Type	Reset	Description
31-24	d3	R	0h	
23-16	d2	R	0h	
15-8	d1	R	0h	
7-0	d0	R	0h	

6.2.6.253 DSS_TPTC_C4_WR_BUS_SAFETY_ERR_STAT_CMD Register (Offset = AC0h) [reset = 0h]

DSS_TPTC_C4_WR_BUS_SAFETY_ERR_STAT_CMD is shown in Figure 6-773 and described in Table 6-779.

Return to the Summary Table.

Figure 6-773. DSS_TPTC_C4_WR_BUS_SAFETY_ERR_STAT_CMD Register

31	30	29	28	27	26	25	24	23	22	21	20	19	18	17	16	15	14	13	12	11	10	9	8	7	6	5	4	3	2	1	0
stat																															
R-0h																															

Table 6-779. DSS_TPTC_C4_WR_BUS_SAFETY_ERR_STAT_CMD Register Field Descriptions

Bit	Field	Type	Reset	Description
31-0	stat	R	0h	

Copyright © 2025 Texas Instruments Incorporated

6.2.6.254 DSS_TPTC_C4_WR_BUS_SAFETY_ERR_STAT_WRITE Register (Offset = AC4h) [reset = 0h]

DSS_TPTC_C4_WR_BUS_SAFETY_ERR_STAT_WRITE is shown in Figure 6-774 and described in Table 6-780.

Return to the Summary Table.

Figure 6-774. DSS_TPTC_C4_WR_BUS_SAFETY_ERR_STAT_WRITE Register

31	30	29	28	27	26	25	24	23	22	21	20	19	18	17	16	15	14	13	12	11	10	9	8	7	6	5	4	3	2	1	0
stat																															
R-0h																															

Table 6-780. DSS_TPTC_C4_WR_BUS_SAFETY_ERR_STAT_WRITE Register Field Descriptions

Bit	Field	Type	Reset	Description
31-0	stat	R	0h	

6.2.6.255 DSS_TPTC_C4_WR_BUS_SAFETY_ERR_STAT_WRITERESP Register (Offset = AC8h) [reset = 0h]

DSS_TPTC_C4_WR_BUS_SAFETY_ERR_STAT_WRITERESP is shown in Figure 6-775 and described in Table 6-781.

Return to the Summary Table.

Figure 6-775. DSS_TPTC_C4_WR_BUS_SAFETY_ERR_STAT_WRITERESP Register

31	30	29	28	27	26	25	24	23	22	21	20	19	18	17	16	15	14	13	12	11	10	9	8	7	6	5	4	3	2	1	0
stat																															
R-0h																															

Table 6-781. DSS_TPTC_C4_WR_BUS_SAFETY_ERR_STAT_WRITERESP Register Field Descriptions

Bit	Field	Type	Reset	Description
31-0	stat	R	0h	

6.2.6.256 DSS_TPTC_C5_WR_BUS_SAFETY_CTRL Register (Offset = ACCh) [reset = X]

DSS_TPTC_C5_WR_BUS_SAFETY_CTRL is shown in Figure 6-776 and described in Table 6-782.

Return to the Summary Table.

Figure 6-776. DSS_TPTC_C5_WR_BUS_SAFETY_CTRL Register

31	30	29	28	27	26	25	24
RESERVED							
R/W-X							
23	22	21	20	19	18	17	16
type							
R-7h							
15	14	13	12	11	10	9	8
RESERVED							err_clear
R/W-X							R/W-0h
7	6	5	4	3	2	1	0
RESERVED						enable	
R/W-X						R/W-7h	

Copyright © 2025 Texas Instruments Incorporated

Figure 6-776. DSS_TPTC_C5_WR_BUS_SAFETY_CTRL Register (continued)

Table 6-782. DSS_TPTC_C5_WR_BUS_SAFETY_CTRL Register Field Descriptions

Bit	Field	Type	Reset	Description
31-24	RESERVED	R/W	X	
23-16	type	R	7h	
15-9	RESERVED	R/W	X	
8	err_clear	R/W	0h	
7-3	RESERVED	R/W	X	
2-0	enable	R/W	7h	

6.2.6.257 DSS_TPTC_C5_WR_BUS_SAFETY_FI Register (Offset = AD0h) [reset = X]

DSS_TPTC_C5_WR_BUS_SAFETY_FI is shown in Figure 6-777 and described in Table 6-783.

Return to the Summary Table.

Figure 6-777. DSS_TPTC_C5_WR_BUS_SAFETY_FI Register

31	30	29	28	27	26	25	24
safe							
R/W-0h							
23	22	21	20	19	18	17	16
main							
R/W-0h							
15	14	13	12	11	10	9	8
data							
R/W-0h							
7	6	5	4	3	2	1	0
RESERVED		ded	sec	global_safe_req	global_main_req	global_safe	global_main
R/W-X		R/W-0h	R/W-0h	R/W-0h	R/W-0h	R/W-0h	R/W-0h

Table 6-783. DSS_TPTC_C5_WR_BUS_SAFETY_FI Register Field Descriptions

Bit	Field	Type	Reset	Description
31-24	safe	R/W	0h	
23-16	main	R/W	0h	
15-8	data	R/W	0h	
7-6	RESERVED	R/W	X	
5	ded	R/W	0h	
4	sec	R/W	0h	
3	global_safe_req	R/W	0h	
2	global_main_req	R/W	0h	
1	global_safe	R/W	0h	
0	global_main	R/W	0h	

6.2.6.258 DSS_TPTC_C5_WR_BUS_SAFETY_ERR Register (Offset = AD4h) [reset = 0h]

DSS_TPTC_C5_WR_BUS_SAFETY_ERR is shown in Figure 6-778 and described in Table 6-784.

Copyright © 2025 Texas Instruments Incorporated

Return to the Summary Table.

Figure 6-778. DSS_TPTC_C5_WR_BUS_SAFETY_ERR Register

31	30	29	28	27	26	25	24	23	22	21	20	19	18	17	16
ded								sec							
R-0h								R-0h							
15	14	13	12	11	10	9	8	7	6	5	4	3	2	1	0
comp_check								comp_err							
R-0h								R-0h							

Table 6-784. DSS_TPTC_C5_WR_BUS_SAFETY_ERR Register Field Descriptions

Bit	Field	Type	Reset	Description
31-24	ded	R	0h	
23-16	sec	R	0h	
15-8	comp_check	R	0h	
7-0	comp_err	R	0h	

6.2.6.259 DSS_TPTC_C5_WR_BUS_SAFETY_ERR_STAT_DATA0 Register (Offset = AD8h) [reset = 0h]

DSS_TPTC_C5_WR_BUS_SAFETY_ERR_STAT_DATA0 is shown in Figure 6-779 and described in Table 6-785.

Return to the Summary Table.

Figure 6-779. DSS_TPTC_C5_WR_BUS_SAFETY_ERR_STAT_DATA0 Register

31	30	29	28	27	26	25	24	23	22	21	20	19	18	17	16	15	14	13	12	11	10	9	8	7	6	5	4	3	2	1	0
d3								d2								d1								d0							
R-0h								R-0h								R-0h								R-0h							

Table 6-785. DSS_TPTC_C5_WR_BUS_SAFETY_ERR_STAT_DATA0 Register Field Descriptions

Bit	Field	Type	Reset	Description
31-24	d3	R	0h	
23-16	d2	R	0h	
15-8	d1	R	0h	
7-0	d0	R	0h	

6.2.6.260 DSS_TPTC_C5_WR_BUS_SAFETY_ERR_STAT_CMD Register (Offset = ADCh) [reset = 0h]

DSS_TPTC_C5_WR_BUS_SAFETY_ERR_STAT_CMD is shown in Figure 6-780 and described in Table 6-786.

Return to the Summary Table.

Figure 6-780. DSS_TPTC_C5_WR_BUS_SAFETY_ERR_STAT_CMD Register

31	30	29	28	27	26	25	24	23	22	21	20	19	18	17	16	15	14	13	12	11	10	9	8	7	6	5	4	3	2	1	0
stat																															
R-0h																															

Table 6-786. DSS_TPTC_C5_WR_BUS_SAFETY_ERR_STAT_CMD Register Field Descriptions

Bit	Field	Type	Reset	Description
31-0	stat	R	0h	

Copyright © 2025 Texas Instruments Incorporated

6.2.6.261 DSS_TPTC_C5_WR_BUS_SAFETY_ERR_STAT_WRITE Register (Offset = AE0h) [reset = 0h]

DSS_TPTC_C5_WR_BUS_SAFETY_ERR_STAT_WRITE is shown in Figure 6-781 and described in Table 6-787.

Return to the Summary Table.

Figure 6-781. DSS_TPTC_C5_WR_BUS_SAFETY_ERR_STAT_WRITE Register

31	30	29	28	27	26	25	24	23	22	21	20	19	18	17	16	15	14	13	12	11	10	9	8	7	6	5	4	3	2	1	0
stat																															
R-0h																															

Table 6-787. DSS_TPTC_C5_WR_BUS_SAFETY_ERR_STAT_WRITE Register Field Descriptions

Bit	Field	Type	Reset	Description
31-0	stat	R	0h	

6.2.6.262 DSS_TPTC_C5_WR_BUS_SAFETY_ERR_STAT_WRITERESP Register (Offset = AE4h) [reset = 0h]

DSS_TPTC_C5_WR_BUS_SAFETY_ERR_STAT_WRITERESP is shown in Figure 6-782 and described in Table 6-788.

Return to the Summary Table.

Figure 6-782. DSS_TPTC_C5_WR_BUS_SAFETY_ERR_STAT_WRITERESP Register

31	30	29	28	27	26	25	24	23	22	21	20	19	18	17	16	15	14	13	12	11	10	9	8	7	6	5	4	3	2	1	0
stat																															
R-0h																															

Table 6-788. DSS_TPTC_C5_WR_BUS_SAFETY_ERR_STAT_WRITERESP Register Field Descriptions

Bit	Field	Type	Reset	Description
31-0	stat	R	0h	

6.2.6.263 DSS_MDO_FIFO_BUS_SAFETY_CTRL Register (Offset = AE8h) [reset = X]

DSS_MDO_FIFO_BUS_SAFETY_CTRL is shown in Figure 6-783 and described in Table 6-789.

Return to the Summary Table.

Figure 6-783. DSS_MDO_FIFO_BUS_SAFETY_CTRL Register

31	30	29	28	27	26	25	24
RESERVED							
R/W-X							
23	22	21	20	19	18	17	16
type							
R-7h							
15	14	13	12	11	10	9	8
RESERVED							err_clear
R/W-X							R/W-0h
7	6	5	4	3	2	1	0
RESERVED						enable	
R/W-X						R/W-7h	

Copyright © 2025 Texas Instruments Incorporated

Figure 6-783. DSS_MDO_FIFO_BUS_SAFETY_CTRL Register (continued)

Table 6-789. DSS_MDO_FIFO_BUS_SAFETY_CTRL Register Field Descriptions

Bit	Field	Type	Reset	Description
31-24	RESERVED	R/W	X	
23-16	type	R	7h	
15-9	RESERVED	R/W	X	
8	err_clear	R/W	0h	
7-3	RESERVED	R/W	X	
2-0	enable	R/W	7h	

6.2.6.264 DSS_MDO_FIFO_BUS_SAFETY_FI Register (Offset = AECh) [reset = X]

DSS_MDO_FIFO_BUS_SAFETY_FI is shown in Figure 6-784 and described in Table 6-790.

Return to the Summary Table.

Figure 6-784. DSS_MDO_FIFO_BUS_SAFETY_FI Register

31	30	29	28	27	26	25	24
safe							
R/W-0h							
23	22	21	20	19	18	17	16
main							
R/W-0h							
15	14	13	12	11	10	9	8
data							
R/W-0h							
7	6	5	4	3	2	1	0
RESERVED		ded	sec	global_safe_req	global_main_req	global_safe	global_main
R/W-X		R/W-0h	R/W-0h	R/W-0h	R/W-0h	R/W-0h	R/W-0h

Table 6-790. DSS_MDO_FIFO_BUS_SAFETY_FI Register Field Descriptions

Bit	Field	Type	Reset	Description
31-24	safe	R/W	0h	
23-16	main	R/W	0h	
15-8	data	R/W	0h	
7-6	RESERVED	R/W	X	
5	ded	R/W	0h	
4	sec	R/W	0h	
3	global_safe_req	R/W	0h	
2	global_main_req	R/W	0h	
1	global_safe	R/W	0h	
0	global_main	R/W	0h	

6.2.6.265 DSS_MDO_FIFO_BUS_SAFETY_ERR Register (Offset = AF0h) [reset = 0h]

DSS_MDO_FIFO_BUS_SAFETY_ERR is shown in Figure 6-785 and described in Table 6-791.

Copyright © 2025 Texas Instruments Incorporated

Return to the Summary Table.

Figure 6-785. DSS_MDO_FIFO_BUS_SAFETY_ERR Register

31	30	29	28	27	26	25	24	23	22	21	20	19	18	17	16
ded								sec							
R-0h								R-0h							
15	14	13	12	11	10	9	8	7	6	5	4	3	2	1	0
comp_check								comp_err							
R-0h								R-0h							

Table 6-791. DSS_MDO_FIFO_BUS_SAFETY_ERR Register Field Descriptions

Bit	Field	Type	Reset	Description
31-24	ded	R	0h	
23-16	sec	R	0h	
15-8	comp_check	R	0h	
7-0	comp_err	R	0h	

6.2.6.266 DSS_MDO_FIFO_BUS_SAFETY_ERR_STAT_DATA0 Register (Offset = AF4h) [reset = 0h]

DSS_MDO_FIFO_BUS_SAFETY_ERR_STAT_DATA0 is shown in Figure 6-786 and described in Table 6-792.

Return to the Summary Table.

Figure 6-786. DSS_MDO_FIFO_BUS_SAFETY_ERR_STAT_DATA0 Register

31	30	29	28	27	26	25	24	23	22	21	20	19	18	17	16	15	14	13	12	11	10	9	8	7	6	5	4	3	2	1	0
d3								d2								d1								d0							
R-0h								R-0h								R-0h								R-0h							

Table 6-792. DSS_MDO_FIFO_BUS_SAFETY_ERR_STAT_DATA0 Register Field Descriptions

Bit	Field	Type	Reset	Description
31-24	d3	R	0h	
23-16	d2	R	0h	
15-8	d1	R	0h	
7-0	d0	R	0h	

6.2.6.267 DSS_MDO_FIFO_BUS_SAFETY_ERR_STAT_CMD Register (Offset = AF8h) [reset = 0h]

DSS_MDO_FIFO_BUS_SAFETY_ERR_STAT_CMD is shown in Figure 6-787 and described in Table 6-793.

Return to the Summary Table.

Figure 6-787. DSS_MDO_FIFO_BUS_SAFETY_ERR_STAT_CMD Register

31	30	29	28	27	26	25	24	23	22	21	20	19	18	17	16	15	14	13	12	11	10	9	8	7	6	5	4	3	2	1	0
stat																															
R-0h																															

Table 6-793. DSS_MDO_FIFO_BUS_SAFETY_ERR_STAT_CMD Register Field Descriptions

Bit	Field	Type	Reset	Description
31-0	stat	R	0h	

Copyright © 2025 Texas Instruments Incorporated

6.2.6.268 DSS_MDO_FIFO_BUS_SAFETY_ERR_STAT_WRITE Register (Offset = AFCh) [reset = 0h]

DSS_MDO_FIFO_BUS_SAFETY_ERR_STAT_WRITE is shown in Figure 6-788 and described in Table 6-794.

Return to the Summary Table.

Figure 6-788. DSS_MDO_FIFO_BUS_SAFETY_ERR_STAT_WRITE Register

31	30	29	28	27	26	25	24	23	22	21	20	19	18	17	16	15	14	13	12	11	10	9	8	7	6	5	4	3	2	1	0
stat																															
R-0h																															

Table 6-794. DSS_MDO_FIFO_BUS_SAFETY_ERR_STAT_WRITE Register Field Descriptions

Bit	Field	Type	Reset	Description
31-0	stat	R	0h	

6.2.6.269 DSS_MDO_FIFO_BUS_SAFETY_ERR_STAT_READ Register (Offset = B00h) [reset = 0h]

DSS_MDO_FIFO_BUS_SAFETY_ERR_STAT_READ is shown in Figure 6-789 and described in Table 6-795.

Return to the Summary Table.

Figure 6-789. DSS_MDO_FIFO_BUS_SAFETY_ERR_STAT_READ Register

31	30	29	28	27	26	25	24	23	22	21	20	19	18	17	16	15	14	13	12	11	10	9	8	7	6	5	4	3	2	1	0
stat																															
R-0h																															

Table 6-795. DSS_MDO_FIFO_BUS_SAFETY_ERR_STAT_READ Register Field Descriptions

Bit	Field	Type	Reset	Description
31-0	stat	R	0h	

6.2.6.270 DSS_MDO_FIFO_BUS_SAFETY_ERR_STAT_WRITERESP Register (Offset = B04h) [reset = 0h]

DSS_MDO_FIFO_BUS_SAFETY_ERR_STAT_WRITERESP is shown in Figure 6-790 and described in Table 6-796.

Return to the Summary Table.

Figure 6-790. DSS_MDO_FIFO_BUS_SAFETY_ERR_STAT_WRITERESP Register

31	30	29	28	27	26	25	24	23	22	21	20	19	18	17	16	15	14	13	12	11	10	9	8	7	6	5	4	3	2	1	0
stat																															
R-0h																															

Table 6-796. DSS_MDO_FIFO_BUS_SAFETY_ERR_STAT_WRITERESP Register Field Descriptions

Bit	Field	Type	Reset	Description
31-0	stat	R	0h	

6.2.6.271 DSS_CBUFF_FIFO_BUS_SAFETY_CTRL Register (Offset = B08h) [reset = X]

DSS_CBUFF_FIFO_BUS_SAFETY_CTRL is shown in Figure 6-791 and described in Table 6-797.

Return to the Summary Table.

Figure 6-791. DSS_CBUFF_FIFO_BUS_SAFETY_CTRL Register

31	30	29	28	27	26	25	24

Copyright © 2025 Texas Instruments Incorporated

Figure 6-791. DSS_CBUFF_FIFO_BUS_SAFETY_CTRL Register (continued)

RESERVED							
R/W-X							
23	22	21	20	19	18	17	16
type							
R-7h							
15	14	13	12	11	10	9	8
RESERVED							err_clear
R/W-X							R/W-0h
7	6	5	4	3	2	1	0
RESERVED						enable	
R/W-X						R/W-7h	

Table 6-797. DSS_CBUFF_FIFO_BUS_SAFETY_CTRL Register Field Descriptions

Bit	Field	Type	Reset	Description
31-24	RESERVED	R/W	X	
23-16	type	R	7h	
15-9	RESERVED	R/W	X	
8	err_clear	R/W	0h	
7-3	RESERVED	R/W	X	
2-0	enable	R/W	7h	

6.2.6.272 DSS_CBUFF_FIFO_BUS_SAFETY_FI Register (Offset = B0Ch) [reset = X]

DSS_CBUFF_FIFO_BUS_SAFETY_FI is shown in Figure 6-792 and described in Table 6-798.

Return to the Summary Table.

Figure 6-792. DSS_CBUFF_FIFO_BUS_SAFETY_FI Register

31	30	29	28	27	26	25	24
safe							
R/W-0h							
23	22	21	20	19	18	17	16
main							
R/W-0h							
15	14	13	12	11	10	9	8
data							
R/W-0h							
7	6	5	4	3	2	1	0
RESERVED		ded	sec	global_safe_req	global_main_req	global_safe	global_main
R/W-X		R/W-0h	R/W-0h	R/W-0h	R/W-0h	R/W-0h	R/W-0h

Table 6-798. DSS_CBUFF_FIFO_BUS_SAFETY_FI Register Field Descriptions

Bit	Field	Type	Reset	Description
31-24	safe	R/W	0h	
23-16	main	R/W	0h	

Copyright © 2025 Texas Instruments Incorporated

Table 6-798. DSS_CBUFF_FIFO_BUS_SAFETY_FI Register Field Descriptions (continued)

Bit	Field	Type	Reset	Description
15-8	data	R/W	0h	
7-6	RESERVED	R/W	X	
5	ded	R/W	0h	
4	sec	R/W	0h	
3	global_safe_req	R/W	0h	
2	global_main_req	R/W	0h	
1	global_safe	R/W	0h	
0	global_main	R/W	0h	

6.2.6.273 DSS_CBUFF_FIFO_BUS_SAFETY_ERR Register (Offset = B10h) [reset = 0h]

DSS_CBUFF_FIFO_BUS_SAFETY_ERR is shown in Figure 6-793 and described in Table 6-799.

Return to the Summary Table.

Figure 6-793. DSS_CBUFF_FIFO_BUS_SAFETY_ERR Register

31	30	29	28	27	26	25	24	23	22	21	20	19	18	17	16
ded								sec							
R-0h								R-0h							
15	14	13	12	11	10	9	8	7	6	5	4	3	2	1	0
comp_check								comp_err							
R-0h								R-0h							

Table 6-799. DSS_CBUFF_FIFO_BUS_SAFETY_ERR Register Field Descriptions

Bit	Field	Type	Reset	Description
31-24	ded	R	0h	
23-16	sec	R	0h	
15-8	comp_check	R	0h	
7-0	comp_err	R	0h	

6.2.6.274 DSS_CBUFF_FIFO_BUS_SAFETY_ERR_STAT_DATA0 Register (Offset = B14h) [reset = 0h]

DSS_CBUFF_FIFO_BUS_SAFETY_ERR_STAT_DATA0 is shown in Figure 6-794 and described in Table 6-800.

Return to the Summary Table.

Figure 6-794. DSS_CBUFF_FIFO_BUS_SAFETY_ERR_STAT_DATA0 Register

31	30	29	28	27	26	25	24	23	22	21	20	19	18	17	16	15	14	13	12	11	10	9	8	7	6	5	4	3	2	1	0
d3								d2								d1								d0							
R-0h								R-0h								R-0h								R-0h							

Table 6-800. DSS_CBUFF_FIFO_BUS_SAFETY_ERR_STAT_DATA0 Register Field Descriptions

Bit	Field	Type	Reset	Description
31-24	d3	R	0h	
23-16	d2	R	0h	
15-8	d1	R	0h	
7-0	d0	R	0h	

Copyright © 2025 Texas Instruments Incorporated

6.2.6.275 DSS_CBUFF_FIFO_BUS_SAFETY_ERR_STAT_CMD Register (Offset = B18h) [reset = 0h]

DSS_CBUFF_FIFO_BUS_SAFETY_ERR_STAT_CMD is shown in Figure 6-795 and described in Table 6-801.

Return to the Summary Table.

Figure 6-795. DSS_CBUFF_FIFO_BUS_SAFETY_ERR_STAT_CMD Register

31	30	29	28	27	26	25	24	23	22	21	20	19	18	17	16	15	14	13	12	11	10	9	8	7	6	5	4	3	2	1	0
stat																															
R-0h																															

Table 6-801. DSS_CBUFF_FIFO_BUS_SAFETY_ERR_STAT_CMD Register Field Descriptions

Bit	Field	Type	Reset	Description
31-0	stat	R	0h	

6.2.6.276 DSS_CBUFF_FIFO_BUS_SAFETY_ERR_STAT_WRITE Register (Offset = B1Ch) [reset = 0h]

DSS_CBUFF_FIFO_BUS_SAFETY_ERR_STAT_WRITE is shown in Figure 6-796 and described in Table 6-802.

Return to the Summary Table.

Figure 6-796. DSS_CBUFF_FIFO_BUS_SAFETY_ERR_STAT_WRITE Register

31	30	29	28	27	26	25	24	23	22	21	20	19	18	17	16	15	14	13	12	11	10	9	8	7	6	5	4	3	2	1	0
stat																															
R-0h																															

Table 6-802. DSS_CBUFF_FIFO_BUS_SAFETY_ERR_STAT_WRITE Register Field Descriptions

Bit	Field	Type	Reset	Description
31-0	stat	R	0h	

6.2.6.277 DSS_CBUFF_FIFO_BUS_SAFETY_ERR_STAT_READ Register (Offset = B20h) [reset = 0h]

DSS_CBUFF_FIFO_BUS_SAFETY_ERR_STAT_READ is shown in Figure 6-797 and described in Table 6-803.

Return to the Summary Table.

Figure 6-797. DSS_CBUFF_FIFO_BUS_SAFETY_ERR_STAT_READ Register

31	30	29	28	27	26	25	24	23	22	21	20	19	18	17	16	15	14	13	12	11	10	9	8	7	6	5	4	3	2	1	0
stat																															
R-0h																															

Table 6-803. DSS_CBUFF_FIFO_BUS_SAFETY_ERR_STAT_READ Register Field Descriptions

Bit	Field	Type	Reset	Description
31-0	stat	R	0h	

6.2.6.278 DSS_CBUFF_FIFO_BUS_SAFETY_ERR_STAT_WRITERESP Register (Offset = B24h) [reset = 0h]

DSS_CBUFF_FIFO_BUS_SAFETY_ERR_STAT_WRITERESP is shown in Figure 6-798 and described in Table 6-804.

Return to the Summary Table.

Figure 6-798. DSS_CBUFF_FIFO_BUS_SAFETY_ERR_STAT_WRITERESP Register

31	30	29	28	27	26	25	24	23	22	21	20	19	18	17	16	15	14	13	12	11	10	9	8	7	6	5	4	3	2	1	0

Copyright © 2025 Texas Instruments Incorporated

Figure 6-798. DSS_CBUFF_FIFO_BUS_SAFETY_ERR_STAT_WRITERESP Register (continued)

stat
R-0h

Table 6-804. DSS_CBUFF_FIFO_BUS_SAFETY_ERR_STAT_WRITERESP Register Field Descriptions

Bit	Field	Type	Reset	Description
31-0	stat	R	0h	

6.2.6.279 DSS_CMC_UCOMP0_BUS_SAFETY_CTRL Register (Offset = B28h) [reset = X]

DSS_CMC_UCOMP0_BUS_SAFETY_CTRL is shown in Figure 6-799 and described in Table 6-805.

Return to the Summary Table.

Figure 6-799. DSS_CMC_UCOMP0_BUS_SAFETY_CTRL Register

31	30	29	28	27	26	25	24
RESERVED							
R/W-X							
23	22	21	20	19	18	17	16
type							
R-Fh							
15	14	13	12	11	10	9	8
RESERVED							err_clear
R/W-X							R/W-0h
7	6	5	4	3	2	1	0
RESERVED						enable	
R/W-X						R/W-7h	

Table 6-805. DSS_CMC_UCOMP0_BUS_SAFETY_CTRL Register Field Descriptions

Bit	Field	Type	Reset	Description
31-24	RESERVED	R/W	X	
23-16	type	R	Fh	
15-9	RESERVED	R/W	X	
8	err_clear	R/W	0h	
7-3	RESERVED	R/W	X	
2-0	enable	R/W	7h	

6.2.6.280 DSS_CMC_UCOMP0_BUS_SAFETY_FI Register (Offset = B2Ch) [reset = X]

DSS_CMC_UCOMP0_BUS_SAFETY_FI is shown in Figure 6-800 and described in Table 6-806.

Return to the Summary Table.

Figure 6-800. DSS_CMC_UCOMP0_BUS_SAFETY_FI Register

31	30	29	28	27	26	25	24
safe							
R/W-0h							
23	22	21	20	19	18	17	16
main							

Copyright © 2025 Texas Instruments Incorporated

Figure 6-800. DSS_CMC_UCOMP0_BUS_SAFETY_FI Register (continued)

R/W-0h							
15	14	13	12	11	10	9	8
data							
R/W-0h							
7	6	5	4	3	2	1	0
RESERVED		ded	sec	global_safe_req	global_main_req	global_safe	global_main
R/W-X		R/W-0h	R/W-0h	R/W-0h	R/W-0h	R/W-0h	R/W-0h

Table 6-806. DSS_CMC_UCOMP0_BUS_SAFETY_FI Register Field Descriptions

Bit	Field	Type	Reset	Description
31-24	safe	R/W	0h	
23-16	main	R/W	0h	
15-8	data	R/W	0h	
7-6	RESERVED	R/W	X	
5	ded	R/W	0h	
4	sec	R/W	0h	
3	global_safe_req	R/W	0h	
2	global_main_req	R/W	0h	
1	global_safe	R/W	0h	
0	global_main	R/W	0h	

6.2.6.281 DSS_CMC_UCOMP0_BUS_SAFETY_ERR Register (Offset = B30h) [reset = 0h]

DSS_CMC_UCOMP0_BUS_SAFETY_ERR is shown in Figure 6-801 and described in Table 6-807.

Return to the Summary Table.

Figure 6-801. DSS_CMC_UCOMP0_BUS_SAFETY_ERR Register

31	30	29	28	27	26	25	24	23	22	21	20	19	18	17	16
ded								sec							
R-0h								R-0h							
15	14	13	12	11	10	9	8	7	6	5	4	3	2	1	0
comp_check								comp_err							
R-0h								R-0h							

Table 6-807. DSS_CMC_UCOMP0_BUS_SAFETY_ERR Register Field Descriptions

Bit	Field	Type	Reset	Description
31-24	ded	R	0h	
23-16	sec	R	0h	
15-8	comp_check	R	0h	
7-0	comp_err	R	0h	

6.2.6.282 DSS_CMC_UCOMP0_BUS_SAFETY_ERR_STAT_DATA0 Register (Offset = B34h) [reset = 0h]

DSS_CMC_UCOMP0_BUS_SAFETY_ERR_STAT_DATA0 is shown in Figure 6-802 and described in Table 6-808.

Copyright © 2025 Texas Instruments Incorporated

Return to the Summary Table.

Figure 6-802. DSS_CMC_UCOMP0_BUS_SAFETY_ERR_STAT_DATA0 Register

31	30	29	28	27	26	25	24	23	22	21	20	19	18	17	16	15	14	13	12	11	10	9	8	7	6	5	4	3	2	1	0
d3								d2								d1								d0							
R-0h								R-0h								R-0h								R-0h							

Table 6-808. DSS_CMC_UCOMP0_BUS_SAFETY_ERR_STAT_DATA0 Register Field Descriptions

Bit	Field	Type	Reset	Description
31-24	d3	R	0h	
23-16	d2	R	0h	
15-8	d1	R	0h	
7-0	d0	R	0h	

6.2.6.283 DSS_CMC_UCOMP0_BUS_SAFETY_ERR_STAT_CMD Register (Offset = B38h) [reset = 0h]

DSS_CMC_UCOMP0_BUS_SAFETY_ERR_STAT_CMD is shown in Figure 6-803 and described in Table 6-809.

Return to the Summary Table.

Figure 6-803. DSS_CMC_UCOMP0_BUS_SAFETY_ERR_STAT_CMD Register

31	30	29	28	27	26	25	24	23	22	21	20	19	18	17	16	15	14	13	12	11	10	9	8	7	6	5	4	3	2	1	0
stat																															
R-0h																															

Table 6-809. DSS_CMC_UCOMP0_BUS_SAFETY_ERR_STAT_CMD Register Field Descriptions

Bit	Field	Type	Reset	Description
31-0	stat	R	0h	

6.2.6.284 DSS_CMC_UCOMP0_BUS_SAFETY_ERR_STAT_WRITE Register (Offset = B3Ch) [reset = 0h]

DSS_CMC_UCOMP0_BUS_SAFETY_ERR_STAT_WRITE is shown in Figure 6-804 and described in Table 6-810.

Return to the Summary Table.

Figure 6-804. DSS_CMC_UCOMP0_BUS_SAFETY_ERR_STAT_WRITE Register

31	30	29	28	27	26	25	24	23	22	21	20	19	18	17	16	15	14	13	12	11	10	9	8	7	6	5	4	3	2	1	0
stat																															
R-0h																															

Table 6-810. DSS_CMC_UCOMP0_BUS_SAFETY_ERR_STAT_WRITE Register Field Descriptions

Bit	Field	Type	Reset	Description
31-0	stat	R	0h	

6.2.6.285 DSS_CMC_UCOMP0_BUS_SAFETY_ERR_STAT_READ Register (Offset = B40h) [reset = 0h]

DSS_CMC_UCOMP0_BUS_SAFETY_ERR_STAT_READ is shown in Figure 6-805 and described in Table 6-811.

Return to the Summary Table.

Copyright © 2025 Texas Instruments Incorporated

Figure 6-805. DSS_CMC_UCOMP0_BUS_SAFETY_ERR_STAT_READ Register

31	30	29	28	27	26	25	24	23	22	21	20	19	18	17	16	15	14	13	12	11	10	9	8	7	6	5	4	3	2	1	0
stat																															
R-0h																															

Table 6-811. DSS_CMC_UCOMP0_BUS_SAFETY_ERR_STAT_READ Register Field Descriptions

Bit	Field	Type	Reset	Description
31-0	stat	R	0h	

6.2.6.286 DSS_CMC_UCOMP0_BUS_SAFETY_ERR_STAT_WRITERESP Register (Offset = B44h) [reset = 0h]

DSS_CMC_UCOMP0_BUS_SAFETY_ERR_STAT_WRITERESP is shown in Figure 6-806 and described in Table 6-812.

Return to the Summary Table.

Figure 6-806. DSS_CMC_UCOMP0_BUS_SAFETY_ERR_STAT_WRITERESP Register

31	30	29	28	27	26	25	24	23	22	21	20	19	18	17	16	15	14	13	12	11	10	9	8	7	6	5	4	3	2	1	0
stat																															
R-0h																															

Table 6-812. DSS_CMC_UCOMP0_BUS_SAFETY_ERR_STAT_WRITERESP Register Field Descriptions

Bit	Field	Type	Reset	Description
31-0	stat	R	0h	

6.2.6.287 DSS_CMC_UCOMP1_BUS_SAFETY_CTRL Register (Offset = B48h) [reset = X]

DSS_CMC_UCOMP1_BUS_SAFETY_CTRL is shown in Figure 6-807 and described in Table 6-813.

Return to the Summary Table.

Figure 6-807. DSS_CMC_UCOMP1_BUS_SAFETY_CTRL Register

31	30	29	28	27	26	25	24
RESERVED							
R/W-X							
23	22	21	20	19	18	17	16
type							
R-Fh							
15	14	13	12	11	10	9	8
RESERVED							err_clear
R/W-X							R/W-0h
7	6	5	4	3	2	1	0
RESERVED						enable	
R/W-X						R/W-7h	

Table 6-813. DSS_CMC_UCOMP1_BUS_SAFETY_CTRL Register Field Descriptions

Bit	Field	Type	Reset	Description
31-24	RESERVED	R/W	X	
23-16	type	R	Fh	

Copyright © 2025 Texas Instruments Incorporated

Table 6-813. DSS_CMC_UCOMP1_BUS_SAFETY_CTRL Register Field Descriptions (continued)

Bit	Field	Type	Reset	Description
15-9	RESERVED	R/W	X	
8	err_clear	R/W	0h	
7-3	RESERVED	R/W	X	
2-0	enable	R/W	7h	

6.2.6.288 DSS_CMC_UCOMP1_BUS_SAFETY_FI Register (Offset = B4Ch) [reset = X]

DSS_CMC_UCOMP1_BUS_SAFETY_FI is shown in Figure 6-808 and described in Table 6-814.

Return to the Summary Table.

Figure 6-808. DSS_CMC_UCOMP1_BUS_SAFETY_FI Register

31	30	29	28	27	26	25	24
safe							
R/W-0h							
23	22	21	20	19	18	17	16
main							
R/W-0h							
15	14	13	12	11	10	9	8
data							
R/W-0h							
7	6	5	4	3	2	1	0
RESERVED		ded	sec	global_safe_req	global_main_req	global_safe	global_main
R/W-X		R/W-0h	R/W-0h	R/W-0h	R/W-0h	R/W-0h	R/W-0h

Table 6-814. DSS_CMC_UCOMP1_BUS_SAFETY_FI Register Field Descriptions

Bit	Field	Type	Reset	Description
31-24	safe	R/W	0h	
23-16	main	R/W	0h	
15-8	data	R/W	0h	
7-6	RESERVED	R/W	X	
5	ded	R/W	0h	
4	sec	R/W	0h	
3	global_safe_req	R/W	0h	
2	global_main_req	R/W	0h	
1	global_safe	R/W	0h	
0	global_main	R/W	0h	

6.2.6.289 DSS_CMC_UCOMP1_BUS_SAFETY_ERR Register (Offset = B50h) [reset = 0h]

DSS_CMC_UCOMP1_BUS_SAFETY_ERR is shown in Figure 6-809 and described in Table 6-815.

Return to the Summary Table.

Figure 6-809. DSS_CMC_UCOMP1_BUS_SAFETY_ERR Register

31	30	29	28	27	26	25	24	23	22	21	20	19	18	17	16
ded								sec							

Copyright © 2025 Texas Instruments Incorporated

Figure 6-809. DSS_CMC_UCOMP1_BUS_SAFETY_ERR Register (continued)

R-0h															R-0h
15	14	13	12	11	10	9	8	7	6	5	4	3	2	1	0
comp_check								comp_err							
R-0h								R-0h							

Table 6-815. DSS_CMC_UCOMP1_BUS_SAFETY_ERR Register Field Descriptions

Bit	Field	Type	Reset	Description
31-24	ded	R	0h	
23-16	sec	R	0h	
15-8	comp_check	R	0h	
7-0	comp_err	R	0h	

6.2.6.290 DSS_CMC_UCOMP1_BUS_SAFETY_ERR_STAT_DATA0 Register (Offset = B54h) [reset = 0h]

DSS_CMC_UCOMP1_BUS_SAFETY_ERR_STAT_DATA0 is shown in Figure 6-810 and described in Table 6-816.

Return to the Summary Table.

Figure 6-810. DSS_CMC_UCOMP1_BUS_SAFETY_ERR_STAT_DATA0 Register

31	30	29	28	27	26	25	24	23	22	21	20	19	18	17	16	15	14	13	12	11	10	9	8	7	6	5	4	3	2	1	0
d3								d2								d1								d0							
R-0h								R-0h								R-0h								R-0h							

Table 6-816. DSS_CMC_UCOMP1_BUS_SAFETY_ERR_STAT_DATA0 Register Field Descriptions

Bit	Field	Type	Reset	Description
31-24	d3	R	0h	
23-16	d2	R	0h	
15-8	d1	R	0h	
7-0	d0	R	0h	

6.2.6.291 DSS_CMC_UCOMP1_BUS_SAFETY_ERR_STAT_CMD Register (Offset = B58h) [reset = 0h]

DSS_CMC_UCOMP1_BUS_SAFETY_ERR_STAT_CMD is shown in Figure 6-811 and described in Table 6-817.

Return to the Summary Table.

Figure 6-811. DSS_CMC_UCOMP1_BUS_SAFETY_ERR_STAT_CMD Register

31	30	29	28	27	26	25	24	23	22	21	20	19	18	17	16	15	14	13	12	11	10	9	8	7	6	5	4	3	2	1	0
stat																															
R-0h																															

Table 6-817. DSS_CMC_UCOMP1_BUS_SAFETY_ERR_STAT_CMD Register Field Descriptions

Bit	Field	Type	Reset	Description
31-0	stat	R	0h	

Copyright © 2025 Texas Instruments Incorporated

6.2.6.292 DSS_CMC_UCOMP1_BUS_SAFETY_ERR_STAT_WRITE Register (Offset = B5Ch) [reset = 0h]

DSS_CMC_UCOMP1_BUS_SAFETY_ERR_STAT_WRITE is shown in Figure 6-812 and described in Table 6-818.

Return to the Summary Table.

Figure 6-812. DSS_CMC_UCOMP1_BUS_SAFETY_ERR_STAT_WRITE Register

31	30	29	28	27	26	25	24	23	22	21	20	19	18	17	16	15	14	13	12	11	10	9	8	7	6	5	4	3	2	1	0
stat																															
R-0h																															

Table 6-818. DSS_CMC_UCOMP1_BUS_SAFETY_ERR_STAT_WRITE Register Field Descriptions

Bit	Field	Type	Reset	Description
31-0	stat	R	0h	

6.2.6.293 DSS_CMC_UCOMP1_BUS_SAFETY_ERR_STAT_READ Register (Offset = B60h) [reset = 0h]

DSS_CMC_UCOMP1_BUS_SAFETY_ERR_STAT_READ is shown in Figure 6-813 and described in Table 6-819.

Return to the Summary Table.

Figure 6-813. DSS_CMC_UCOMP1_BUS_SAFETY_ERR_STAT_READ Register

31	30	29	28	27	26	25	24	23	22	21	20	19	18	17	16	15	14	13	12	11	10	9	8	7	6	5	4	3	2	1	0
stat																															
R-0h																															

Table 6-819. DSS_CMC_UCOMP1_BUS_SAFETY_ERR_STAT_READ Register Field Descriptions

Bit	Field	Type	Reset	Description
31-0	stat	R	0h	

6.2.6.294 DSS_CMC_UCOMP1_BUS_SAFETY_ERR_STAT_WRITERESP Register (Offset = B64h) [reset = 0h]

DSS_CMC_UCOMP1_BUS_SAFETY_ERR_STAT_WRITERESP is shown in Figure 6-814 and described in Table 6-820.

Return to the Summary Table.

Figure 6-814. DSS_CMC_UCOMP1_BUS_SAFETY_ERR_STAT_WRITERESP Register

31	30	29	28	27	26	25	24	23	22	21	20	19	18	17	16	15	14	13	12	11	10	9	8	7	6	5	4	3	2	1	0
stat																															
R-0h																															

Table 6-820. DSS_CMC_UCOMP1_BUS_SAFETY_ERR_STAT_WRITERESP Register Field Descriptions

Bit	Field	Type	Reset	Description
31-0	stat	R	0h	

6.2.6.295 DSS_CMC_UCOMP2_BUS_SAFETY_CTRL Register (Offset = B68h) [reset = X]

DSS_CMC_UCOMP2_BUS_SAFETY_CTRL is shown in Figure 6-815 and described in Table 6-821.

Return to the Summary Table.

Copyright © 2025 Texas Instruments Incorporated

Figure 6-815. DSS_CMC_UCOMP2_BUS_SAFETY_CTRL Register

31	30	29	28	27	26	25	24
RESERVED							
R/W-X							
23	22	21	20	19	18	17	16
type							
R-Fh							
15	14	13	12	11	10	9	8
RESERVED							err_clear
R/W-X							R/W-0h
7	6	5	4	3	2	1	0
RESERVED						enable	
R/W-X						R/W-7h	

Table 6-821. DSS_CMC_UCOMP2_BUS_SAFETY_CTRL Register Field Descriptions

Bit	Field	Type	Reset	Description
31-24	RESERVED	R/W	X	
23-16	type	R	Fh	
15-9	RESERVED	R/W	X	
8	err_clear	R/W	0h	
7-3	RESERVED	R/W	X	
2-0	enable	R/W	7h	

6.2.6.296 DSS_CMC_UCOMP2_BUS_SAFETY_FI Register (Offset = B6Ch) [reset = X]

DSS_CMC_UCOMP2_BUS_SAFETY_FI is shown in Figure 6-816 and described in Table 6-822.

Return to the Summary Table.

Figure 6-816. DSS_CMC_UCOMP2_BUS_SAFETY_FI Register

31	30	29	28	27	26	25	24
safe							
R/W-0h							
23	22	21	20	19	18	17	16
main							
R/W-0h							
15	14	13	12	11	10	9	8
data							
R/W-0h							
7	6	5	4	3	2	1	0
RESERVED		ded	sec	global_safe_req	global_main_req	global_safe	global_main
R/W-X		R/W-0h	R/W-0h	R/W-0h	R/W-0h	R/W-0h	R/W-0h

Table 6-822. DSS_CMC_UCOMP2_BUS_SAFETY_FI Register Field Descriptions

Bit	Field	Type	Reset	Description
31-24	safe	R/W	0h	

Copyright © 2025 Texas Instruments Incorporated

Table 6-822. DSS_CMC_UCOMP2_BUS_SAFETY_FI Register Field Descriptions (continued)

Bit	Field	Type	Reset	Description
23-16	main	R/W	0h	
15-8	data	R/W	0h	
7-6	RESERVED	R/W	X	
5	ded	R/W	0h	
4	sec	R/W	0h	
3	global_safe_req	R/W	0h	
2	global_main_req	R/W	0h	
1	global_safe	R/W	0h	
0	global_main	R/W	0h	

6.2.6.297 DSS_CMC_UCOMP2_BUS_SAFETY_ERR Register (Offset = B70h) [reset = 0h]

DSS_CMC_UCOMP2_BUS_SAFETY_ERR is shown in Figure 6-817 and described in Table 6-823.

Return to the Summary Table.

Figure 6-817. DSS_CMC_UCOMP2_BUS_SAFETY_ERR Register

31	30	29	28	27	26	25	24	23	22	21	20	19	18	17	16
ded								sec							
R-0h								R-0h							
15	14	13	12	11	10	9	8	7	6	5	4	3	2	1	0
comp_check								comp_err							
R-0h								R-0h							

Table 6-823. DSS_CMC_UCOMP2_BUS_SAFETY_ERR Register Field Descriptions

Bit	Field	Type	Reset	Description
31-24	ded	R	0h	
23-16	sec	R	0h	
15-8	comp_check	R	0h	
7-0	comp_err	R	0h	

6.2.6.298 DSS_CMC_UCOMP2_BUS_SAFETY_ERR_STAT_DATA0 Register (Offset = B74h) [reset = 0h]

DSS_CMC_UCOMP2_BUS_SAFETY_ERR_STAT_DATA0 is shown in Figure 6-818 and described in Table 6-824.

Return to the Summary Table.

Figure 6-818. DSS_CMC_UCOMP2_BUS_SAFETY_ERR_STAT_DATA0 Register

31	30	29	28	27	26	25	24	23	22	21	20	19	18	17	16	15	14	13	12	11	10	9	8	7	6	5	4	3	2	1	0
d3								d2								d1								d0							
R-0h								R-0h								R-0h								R-0h							

Table 6-824. DSS_CMC_UCOMP2_BUS_SAFETY_ERR_STAT_DATA0 Register Field Descriptions

Bit	Field	Type	Reset	Description
31-24	d3	R	0h	
23-16	d2	R	0h	
15-8	d1	R	0h	

Copyright © 2025 Texas Instruments Incorporated

Table 6-824. DSS_CMC_UCOMP2_BUS_SAFETY_ERR_STAT_DATA0 Register Field Descriptions (continued)

Bit	Field	Type	Reset	Description
7-0	d0	R	0h	

6.2.6.299 DSS_CMC_UCOMP2_BUS_SAFETY_ERR_STAT_CMD Register (Offset = B78h) [reset = 0h]

DSS_CMC_UCOMP2_BUS_SAFETY_ERR_STAT_CMD is shown in Figure 6-819 and described in Table 6-825.

Return to the Summary Table.

Figure 6-819. DSS_CMC_UCOMP2_BUS_SAFETY_ERR_STAT_CMD Register

31	30	29	28	27	26	25	24	23	22	21	20	19	18	17	16	15	14	13	12	11	10	9	8	7	6	5	4	3	2	1	0
stat																															
R-0h																															

Table 6-825. DSS_CMC_UCOMP2_BUS_SAFETY_ERR_STAT_CMD Register Field Descriptions

Bit	Field	Type	Reset	Description
31-0	stat	R	0h	

6.2.6.300 DSS_CMC_UCOMP2_BUS_SAFETY_ERR_STAT_WRITE Register (Offset = B7Ch) [reset = 0h]

DSS_CMC_UCOMP2_BUS_SAFETY_ERR_STAT_WRITE is shown in Figure 6-820 and described in Table 6-826.

Return to the Summary Table.

Figure 6-820. DSS_CMC_UCOMP2_BUS_SAFETY_ERR_STAT_WRITE Register

31	30	29	28	27	26	25	24	23	22	21	20	19	18	17	16	15	14	13	12	11	10	9	8	7	6	5	4	3	2	1	0
stat																															
R-0h																															

Table 6-826. DSS_CMC_UCOMP2_BUS_SAFETY_ERR_STAT_WRITE Register Field Descriptions

Bit	Field	Type	Reset	Description
31-0	stat	R	0h	

6.2.6.301 DSS_CMC_UCOMP2_BUS_SAFETY_ERR_STAT_READ Register (Offset = B80h) [reset = 0h]

DSS_CMC_UCOMP2_BUS_SAFETY_ERR_STAT_READ is shown in Figure 6-821 and described in Table 6-827.

Return to the Summary Table.

Figure 6-821. DSS_CMC_UCOMP2_BUS_SAFETY_ERR_STAT_READ Register

31	30	29	28	27	26	25	24	23	22	21	20	19	18	17	16	15	14	13	12	11	10	9	8	7	6	5	4	3	2	1	0
stat																															
R-0h																															

Table 6-827. DSS_CMC_UCOMP2_BUS_SAFETY_ERR_STAT_READ Register Field Descriptions

Bit	Field	Type	Reset	Description
31-0	stat	R	0h	

Copyright © 2025 Texas Instruments Incorporated

6.2.6.302 DSS_CMC_UCOMP2_BUS_SAFETY_ERR_STAT_WRITERESP Register (Offset = B84h) [reset = 0h]

DSS_CMC_UCOMP2_BUS_SAFETY_ERR_STAT_WRITERESP is shown in Figure 6-822 and described in Table 6-828.

Return to the Summary Table.

Figure 6-822. DSS_CMC_UCOMP2_BUS_SAFETY_ERR_STAT_WRITERESP Register

31	30	29	28	27	26	25	24	23	22	21	20	19	18	17	16	15	14	13	12	11	10	9	8	7	6	5	4	3	2	1	0
stat																															
R-0h																															

Table 6-828. DSS_CMC_UCOMP2_BUS_SAFETY_ERR_STAT_WRITERESP Register Field Descriptions

Bit	Field	Type	Reset	Description
31-0	stat	R	0h	

6.2.6.303 DSS_CMC_UCOMP3_BUS_SAFETY_CTRL Register (Offset = B88h) [reset = X]

DSS_CMC_UCOMP3_BUS_SAFETY_CTRL is shown in Figure 6-823 and described in Table 6-829.

Return to the Summary Table.

Figure 6-823. DSS_CMC_UCOMP3_BUS_SAFETY_CTRL Register

31	30	29	28	27	26	25	24
RESERVED							
R/W-X							
23	22	21	20	19	18	17	16
type							
R-Fh							
15	14	13	12	11	10	9	8
RESERVED							err_clear
R/W-X							R/W-0h
7	6	5	4	3	2	1	0
RESERVED						enable	
R/W-X						R/W-7h	

Table 6-829. DSS_CMC_UCOMP3_BUS_SAFETY_CTRL Register Field Descriptions

Bit	Field	Type	Reset	Description
31-24	RESERVED	R/W	X	
23-16	type	R	Fh	
15-9	RESERVED	R/W	X	
8	err_clear	R/W	0h	
7-3	RESERVED	R/W	X	
2-0	enable	R/W	7h	

6.2.6.304 DSS_CMC_UCOMP3_BUS_SAFETY_FI Register (Offset = B8Ch) [reset = X]

DSS_CMC_UCOMP3_BUS_SAFETY_FI is shown in Figure 6-824 and described in Table 6-830.

Return to the Summary Table.

Copyright © 2025 Texas Instruments Incorporated

Figure 6-824. DSS_CMC_UCOMP3_BUS_SAFETY_FI Register

31	30	29	28	27	26	25	24
safe							
R/W-0h							
23	22	21	20	19	18	17	16
main							
R/W-0h							
15	14	13	12	11	10	9	8
data							
R/W-0h							
7	6	5	4	3	2	1	0
RESERVED		ded	sec	global_safe_req	global_main_req	global_safe	global_main
R/W-X		R/W-0h	R/W-0h	R/W-0h	R/W-0h	R/W-0h	R/W-0h

Table 6-830. DSS_CMC_UCOMP3_BUS_SAFETY_FI Register Field Descriptions

Bit	Field	Type	Reset	Description
31-24	safe	R/W	0h	
23-16	main	R/W	0h	
15-8	data	R/W	0h	
7-6	RESERVED	R/W	X	
5	ded	R/W	0h	
4	sec	R/W	0h	
3	global_safe_req	R/W	0h	
2	global_main_req	R/W	0h	
1	global_safe	R/W	0h	
0	global_main	R/W	0h	

6.2.6.305 DSS_CMC_UCOMP3_BUS_SAFETY_ERR Register (Offset = B90h) [reset = 0h]

DSS_CMC_UCOMP3_BUS_SAFETY_ERR is shown in Figure 6-825 and described in Table 6-831.

Return to the Summary Table.

Figure 6-825. DSS_CMC_UCOMP3_BUS_SAFETY_ERR Register

31	30	29	28	27	26	25	24	23	22	21	20	19	18	17	16
ded								sec							
R-0h								R-0h							
15	14	13	12	11	10	9	8	7	6	5	4	3	2	1	0
comp_check								comp_err							
R-0h								R-0h							

Table 6-831. DSS_CMC_UCOMP3_BUS_SAFETY_ERR Register Field Descriptions

Bit	Field	Type	Reset	Description
31-24	ded	R	0h	
23-16	sec	R	0h	
15-8	comp_check	R	0h	

Copyright © 2025 Texas Instruments Incorporated

Table 6-831. DSS_CMC_UCOMP3_BUS_SAFETY_ERR Register Field Descriptions (continued)

Bit	Field	Type	Reset	Description
7-0	comp_err	R	0h	

6.2.6.306 DSS_CMC_UCOMP3_BUS_SAFETY_ERR_STAT_DATA0 Register (Offset = B94h) [reset = 0h]

DSS_CMC_UCOMP3_BUS_SAFETY_ERR_STAT_DATA0 is shown in Figure 6-826 and described in Table 6-832.

Return to the Summary Table.

Figure 6-826. DSS_CMC_UCOMP3_BUS_SAFETY_ERR_STAT_DATA0 Register

31	30	29	28	27	26	25	24	23	22	21	20	19	18	17	16	15	14	13	12	11	10	9	8	7	6	5	4	3	2	1	0
d3								d2								d1								d0							
R-0h								R-0h								R-0h								R-0h							

Table 6-832. DSS_CMC_UCOMP3_BUS_SAFETY_ERR_STAT_DATA0 Register Field Descriptions

Bit	Field	Type	Reset	Description
31-24	d3	R	0h	
23-16	d2	R	0h	
15-8	d1	R	0h	
7-0	d0	R	0h	

6.2.6.307 DSS_CMC_UCOMP3_BUS_SAFETY_ERR_STAT_CMD Register (Offset = B98h) [reset = 0h]

DSS_CMC_UCOMP3_BUS_SAFETY_ERR_STAT_CMD is shown in Figure 6-827 and described in Table 6-833.

Return to the Summary Table.

Figure 6-827. DSS_CMC_UCOMP3_BUS_SAFETY_ERR_STAT_CMD Register

31	30	29	28	27	26	25	24	23	22	21	20	19	18	17	16	15	14	13	12	11	10	9	8	7	6	5	4	3	2	1	0
stat																															
R-0h																															

Table 6-833. DSS_CMC_UCOMP3_BUS_SAFETY_ERR_STAT_CMD Register Field Descriptions

Bit	Field	Type	Reset	Description
31-0	stat	R	0h	

6.2.6.308 DSS_CMC_UCOMP3_BUS_SAFETY_ERR_STAT_WRITE Register (Offset = B9Ch) [reset = 0h]

DSS_CMC_UCOMP3_BUS_SAFETY_ERR_STAT_WRITE is shown in Figure 6-828 and described in Table 6-834.

Return to the Summary Table.

Figure 6-828. DSS_CMC_UCOMP3_BUS_SAFETY_ERR_STAT_WRITE Register

31	30	29	28	27	26	25	24	23	22	21	20	19	18	17	16	15	14	13	12	11	10	9	8	7	6	5	4	3	2	1	0
stat																															
R-0h																															

Copyright © 2025 Texas Instruments Incorporated

Table 6-834. DSS_CMC_UCOMP3_BUS_SAFETY_ERR_STAT_WRITE Register Field Descriptions

Bit	Field	Type	Reset	Description
31-0	stat	R	0h	

6.2.6.309 DSS_CMC_UCOMP3_BUS_SAFETY_ERR_STAT_READ Register (Offset = BA0h) [reset = 0h]

DSS_CMC_UCOMP3_BUS_SAFETY_ERR_STAT_READ is shown in Figure 6-829 and described in Table 6-835.

Return to the Summary Table.

Figure 6-829. DSS_CMC_UCOMP3_BUS_SAFETY_ERR_STAT_READ Register

31	30	29	28	27	26	25	24	23	22	21	20	19	18	17	16	15	14	13	12	11	10	9	8	7	6	5	4	3	2	1	0
stat																															
R-0h																															

Table 6-835. DSS_CMC_UCOMP3_BUS_SAFETY_ERR_STAT_READ Register Field Descriptions

Bit	Field	Type	Reset	Description
31-0	stat	R	0h	

6.2.6.310 DSS_CMC_UCOMP3_BUS_SAFETY_ERR_STAT_WRITERESP Register (Offset = BA4h) [reset = 0h]

DSS_CMC_UCOMP3_BUS_SAFETY_ERR_STAT_WRITERESP is shown in Figure 6-830 and described in Table 6-836.

Return to the Summary Table.

Figure 6-830. DSS_CMC_UCOMP3_BUS_SAFETY_ERR_STAT_WRITERESP Register

31	30	29	28	27	26	25	24	23	22	21	20	19	18	17	16	15	14	13	12	11	10	9	8	7	6	5	4	3	2	1	0
stat																															
R-0h																															

Table 6-836. DSS_CMC_UCOMP3_BUS_SAFETY_ERR_STAT_WRITERESP Register Field Descriptions

Bit	Field	Type	Reset	Description
31-0	stat	R	0h	

6.2.6.311 DSS_CMC_COMP_BUS_SAFETY_CTRL Register (Offset = BA8h) [reset = X]

DSS_CMC_COMP_BUS_SAFETY_CTRL is shown in Figure 6-831 and described in Table 6-837.

Return to the Summary Table.

Figure 6-831. DSS_CMC_COMP_BUS_SAFETY_CTRL Register

31	30	29	28	27	26	25	24
RESERVED							
R/W-X							
23	22	21	20	19	18	17	16
type							
R-Fh							
15	14	13	12	11	10	9	8
RESERVED							err_clear

Copyright © 2025 Texas Instruments Incorporated

Figure 6-831. DSS_CMC_COMP_BUS_SAFETY_CTRL Register (continued)

R/W-X							R/W-0h
7	6	5	4	3	2	1	0
RESERVED						enable	
R/W-X						R/W-7h	

Table 6-837. DSS_CMC_COMP_BUS_SAFETY_CTRL Register Field Descriptions

Bit	Field	Type	Reset	Description
31-24	RESERVED	R/W	X	
23-16	type	R	Fh	
15-9	RESERVED	R/W	X	
8	err_clear	R/W	0h	
7-3	RESERVED	R/W	X	
2-0	enable	R/W	7h	

6.2.6.312 DSS_CMC_COMP_BUS_SAFETY_FI Register (Offset = BACh) [reset = X]

DSS_CMC_COMP_BUS_SAFETY_FI is shown in Figure 6-832 and described in Table 6-838.

Return to the Summary Table.

Figure 6-832. DSS_CMC_COMP_BUS_SAFETY_FI Register

31	30	29	28	27	26	25	24
safe							
R/W-0h							
23	22	21	20	19	18	17	16
main							
R/W-0h							
15	14	13	12	11	10	9	8
data							
R/W-0h							
7	6	5	4	3	2	1	0
RESERVED		ded	sec	global_safe_req	global_main_req	global_safe	global_main
R/W-X		R/W-0h	R/W-0h	R/W-0h	R/W-0h	R/W-0h	R/W-0h

Table 6-838. DSS_CMC_COMP_BUS_SAFETY_FI Register Field Descriptions

Bit	Field	Type	Reset	Description
31-24	safe	R/W	0h	
23-16	main	R/W	0h	
15-8	data	R/W	0h	
7-6	RESERVED	R/W	X	
5	ded	R/W	0h	
4	sec	R/W	0h	
3	global_safe_req	R/W	0h	
2	global_main_req	R/W	0h	
1	global_safe	R/W	0h	

Copyright © 2025 Texas Instruments Incorporated

Table 6-838. DSS_CMC_COMP_BUS_SAFETY_FI Register Field Descriptions (continued)

Bit	Field	Type	Reset	Description
0	global_main	R/W	0h	

6.2.6.313 DSS_CMC_COMP_BUS_SAFETY_ERR Register (Offset = BB0h) [reset = 0h]

DSS_CMC_COMP_BUS_SAFETY_ERR is shown in Figure 6-833 and described in Table 6-839.

Return to the Summary Table.

Figure 6-833. DSS_CMC_COMP_BUS_SAFETY_ERR Register

31	30	29	28	27	26	25	24	23	22	21	20	19	18	17	16
ded								sec							
R-0h								R-0h							
15	14	13	12	11	10	9	8	7	6	5	4	3	2	1	0
comp_check								comp_err							
R-0h								R-0h							

Table 6-839. DSS_CMC_COMP_BUS_SAFETY_ERR Register Field Descriptions

Bit	Field	Type	Reset	Description
31-24	ded	R	0h	
23-16	sec	R	0h	
15-8	comp_check	R	0h	
7-0	comp_err	R	0h	

6.2.6.314 DSS_CMC_COMP_BUS_SAFETY_ERR_STAT_DATA0 Register (Offset = BB4h) [reset = 0h]

DSS_CMC_COMP_BUS_SAFETY_ERR_STAT_DATA0 is shown in Figure 6-834 and described in Table 6-840.

Return to the Summary Table.

Figure 6-834. DSS_CMC_COMP_BUS_SAFETY_ERR_STAT_DATA0 Register

31	30	29	28	27	26	25	24	23	22	21	20	19	18	17	16	15	14	13	12	11	10	9	8	7	6	5	4	3	2	1	0
d3								d2								d1								d0							
R-0h								R-0h								R-0h								R-0h							

Table 6-840. DSS_CMC_COMP_BUS_SAFETY_ERR_STAT_DATA0 Register Field Descriptions

Bit	Field	Type	Reset	Description
31-24	d3	R	0h	
23-16	d2	R	0h	
15-8	d1	R	0h	
7-0	d0	R	0h	

6.2.6.315 DSS_CMC_COMP_BUS_SAFETY_ERR_STAT_CMD Register (Offset = BB8h) [reset = 0h]

DSS_CMC_COMP_BUS_SAFETY_ERR_STAT_CMD is shown in Figure 6-835 and described in Table 6-841.

Return to the Summary Table.

Figure 6-835. DSS_CMC_COMP_BUS_SAFETY_ERR_STAT_CMD Register

31	30	29	28	27	26	25	24	23	22	21	20	19	18	17	16	15	14	13	12	11	10	9	8	7	6	5	4	3	2	1	0
stat																															

Copyright © 2025 Texas Instruments Incorporated

Figure 6-835. DSS_CMC_COMP_BUS_SAFETY_ERR_STAT_CMD Register (continued)

R-0h

Table 6-841. DSS_CMC_COMP_BUS_SAFETY_ERR_STAT_CMD Register Field Descriptions

Bit	Field	Type	Reset	Description
31-0	stat	R	0h	

6.2.6.316 DSS_CMC_COMP_BUS_SAFETY_ERR_STAT_WRITE Register (Offset = BBCh) [reset = 0h]

DSS_CMC_COMP_BUS_SAFETY_ERR_STAT_WRITE is shown in Figure 6-836 and described in Table 6-842.

Return to the Summary Table.

Figure 6-836. DSS_CMC_COMP_BUS_SAFETY_ERR_STAT_WRITE Register

31	30	29	28	27	26	25	24	23	22	21	20	19	18	17	16	15	14	13	12	11	10	9	8	7	6	5	4	3	2	1	0
stat																															
R-0h																															

Table 6-842. DSS_CMC_COMP_BUS_SAFETY_ERR_STAT_WRITE Register Field Descriptions

Bit	Field	Type	Reset	Description
31-0	stat	R	0h	

6.2.6.317 DSS_CMC_COMP_BUS_SAFETY_ERR_STAT_READ Register (Offset = BC0h) [reset = 0h]

DSS_CMC_COMP_BUS_SAFETY_ERR_STAT_READ is shown in Figure 6-837 and described in Table 6-843.

Return to the Summary Table.

Figure 6-837. DSS_CMC_COMP_BUS_SAFETY_ERR_STAT_READ Register

31	30	29	28	27	26	25	24	23	22	21	20	19	18	17	16	15	14	13	12	11	10	9	8	7	6	5	4	3	2	1	0
stat																															
R-0h																															

Table 6-843. DSS_CMC_COMP_BUS_SAFETY_ERR_STAT_READ Register Field Descriptions

Bit	Field	Type	Reset	Description
31-0	stat	R	0h	

6.2.6.318 DSS_CMC_COMP_BUS_SAFETY_ERR_STAT_WRITERESP Register (Offset = BC4h) [reset = 0h]

DSS_CMC_COMP_BUS_SAFETY_ERR_STAT_WRITERESP is shown in Figure 6-838 and described in Table 6-844.

Return to the Summary Table.

Figure 6-838. DSS_CMC_COMP_BUS_SAFETY_ERR_STAT_WRITERESP Register

31	30	29	28	27	26	25	24	23	22	21	20	19	18	17	16	15	14	13	12	11	10	9	8	7	6	5	4	3	2	1	0
stat																															
R-0h																															

Table 6-844. DSS_CMC_COMP_BUS_SAFETY_ERR_STAT_WRITERESP Register Field Descriptions

Bit	Field	Type	Reset	Description
31-0	stat	R	0h	

Copyright © 2025 Texas Instruments Incorporated

6.2.6.319 DSS_MCRC_BUS_SAFETY_CTRL Register (Offset = BC8h) [reset = X]

DSS_MCRC_BUS_SAFETY_CTRL is shown in Figure 6-839 and described in Table 6-845.

Return to the Summary Table.

Figure 6-839. DSS_MCRC_BUS_SAFETY_CTRL Register

31	30	29	28	27	26	25	24
RESERVED							
R/W-X							
23	22	21	20	19	18	17	16
type							
R-Fh							
15	14	13	12	11	10	9	8
RESERVED							err_clear
R/W-X							R/W-0h
7	6	5	4	3	2	1	0
RESERVED						enable	
R/W-X						R/W-7h	

Table 6-845. DSS_MCRC_BUS_SAFETY_CTRL Register Field Descriptions

Bit	Field	Type	Reset	Description
31-24	RESERVED	R/W	X	
23-16	type	R	Fh	
15-9	RESERVED	R/W	X	
8	err_clear	R/W	0h	
7-3	RESERVED	R/W	X	
2-0	enable	R/W	7h	

6.2.6.320 DSS_MCRC_BUS_SAFETY_FI Register (Offset = BCCh) [reset = X]

DSS_MCRC_BUS_SAFETY_FI is shown in Figure 6-840 and described in Table 6-846.

Return to the Summary Table.

Figure 6-840. DSS_MCRC_BUS_SAFETY_FI Register

31	30	29	28	27	26	25	24
safe							
R/W-0h							
23	22	21	20	19	18	17	16
main							
R/W-0h							
15	14	13	12	11	10	9	8
data							
R/W-0h							
7	6	5	4	3	2	1	0
RESERVED		ded	sec	global_safe_req	global_main_req	global_safe	global_main
R/W-X		R/W-0h	R/W-0h	R/W-0h	R/W-0h	R/W-0h	R/W-0h

Copyright © 2025 Texas Instruments Incorporated

Figure 6-840. DSS_MCRC_BUS_SAFETY_FI Register (continued)

Table 6-846. DSS_MCRC_BUS_SAFETY_FI Register Field Descriptions

Bit	Field	Type	Reset	Description
31-24	safe	R/W	0h	
23-16	main	R/W	0h	
15-8	data	R/W	0h	
7-6	RESERVED	R/W	X	
5	ded	R/W	0h	
4	sec	R/W	0h	
3	global_safe_req	R/W	0h	
2	global_main_req	R/W	0h	
1	global_safe	R/W	0h	
0	global_main	R/W	0h	

6.2.6.321 DSS_MCRC_BUS_SAFETY_ERR Register (Offset = BD0h) [reset = 0h]

DSS_MCRC_BUS_SAFETY_ERR is shown in Figure 6-841 and described in Table 6-847.

Return to the Summary Table.

Figure 6-841. DSS_MCRC_BUS_SAFETY_ERR Register

31	30	29	28	27	26	25	24	23	22	21	20	19	18	17	16
ded								sec							
R-0h								R-0h							
15	14	13	12	11	10	9	8	7	6	5	4	3	2	1	0
comp_check								comp_err							
R-0h								R-0h							

Table 6-847. DSS_MCRC_BUS_SAFETY_ERR Register Field Descriptions

Bit	Field	Type	Reset	Description
31-24	ded	R	0h	
23-16	sec	R	0h	
15-8	comp_check	R	0h	
7-0	comp_err	R	0h	

6.2.6.322 DSS_MCRC_BUS_SAFETY_ERR_STAT_DATA0 Register (Offset = BD4h) [reset = 0h]

DSS_MCRC_BUS_SAFETY_ERR_STAT_DATA0 is shown in Figure 6-842 and described in Table 6-848.

Return to the Summary Table.

Figure 6-842. DSS_MCRC_BUS_SAFETY_ERR_STAT_DATA0 Register

31	30	29	28	27	26	25	24	23	22	21	20	19	18	17	16	15	14	13	12	11	10	9	8	7	6	5	4	3	2	1	0
d3								d2								d1								d0							
R-0h								R-0h								R-0h								R-0h							

Table 6-848. DSS_MCRC_BUS_SAFETY_ERR_STAT_DATA0 Register Field Descriptions

Bit	Field	Type	Reset	Description
31-24	d3	R	0h	

Copyright © 2025 Texas Instruments Incorporated

Table 6-848. DSS_MCRC_BUS_SAFETY_ERR_STAT_DATA0 Register Field Descriptions (continued)

Bit	Field	Type	Reset	Description
23-16	d2	R	0h	
15-8	d1	R	0h	
7-0	d0	R	0h	

6.2.6.323 DSS_MCRC_BUS_SAFETY_ERR_STAT_CMD Register (Offset = BD8h) [reset = 0h]

DSS_MCRC_BUS_SAFETY_ERR_STAT_CMD is shown in Figure 6-843 and described in Table 6-849.

Return to the Summary Table.

Figure 6-843. DSS_MCRC_BUS_SAFETY_ERR_STAT_CMD Register

31	30	29	28	27	26	25	24	23	22	21	20	19	18	17	16	15	14	13	12	11	10	9	8	7	6	5	4	3	2	1	0
stat																															
R-0h																															

Table 6-849. DSS_MCRC_BUS_SAFETY_ERR_STAT_CMD Register Field Descriptions

Bit	Field	Type	Reset	Description
31-0	stat	R	0h	

6.2.6.324 DSS_MCRC_BUS_SAFETY_ERR_STAT_WRITE Register (Offset = BDCh) [reset = 0h]

DSS_MCRC_BUS_SAFETY_ERR_STAT_WRITE is shown in Figure 6-844 and described in Table 6-850.

Return to the Summary Table.

Figure 6-844. DSS_MCRC_BUS_SAFETY_ERR_STAT_WRITE Register

31	30	29	28	27	26	25	24	23	22	21	20	19	18	17	16	15	14	13	12	11	10	9	8	7	6	5	4	3	2	1	0
stat																															
R-0h																															

Table 6-850. DSS_MCRC_BUS_SAFETY_ERR_STAT_WRITE Register Field Descriptions

Bit	Field	Type	Reset	Description
31-0	stat	R	0h	

6.2.6.325 DSS_MCRC_BUS_SAFETY_ERR_STAT_READ Register (Offset = BE0h) [reset = 0h]

DSS_MCRC_BUS_SAFETY_ERR_STAT_READ is shown in Figure 6-845 and described in Table 6-851.

Return to the Summary Table.

Figure 6-845. DSS_MCRC_BUS_SAFETY_ERR_STAT_READ Register

31	30	29	28	27	26	25	24	23	22	21	20	19	18	17	16	15	14	13	12	11	10	9	8	7	6	5	4	3	2	1	0
stat																															
R-0h																															

Table 6-851. DSS_MCRC_BUS_SAFETY_ERR_STAT_READ Register Field Descriptions

Bit	Field	Type	Reset	Description
31-0	stat	R	0h	

Copyright © 2025 Texas Instruments Incorporated

6.2.6.326 DSS_MCRC_BUS_SAFETY_ERR_STAT_WRITERESP Register (Offset = BE4h) [reset = 0h]

DSS_MCRC_BUS_SAFETY_ERR_STAT_WRITERESP is shown in Figure 6-846 and described in Table 6-852.

Return to the Summary Table.

Figure 6-846. DSS_MCRC_BUS_SAFETY_ERR_STAT_WRITERESP Register

31	30	29	28	27	26	25	24	23	22	21	20	19	18	17	16	15	14	13	12	11	10	9	8	7	6	5	4	3	2	1	0
stat																															
R-0h																															

Table 6-852. DSS_MCRC_BUS_SAFETY_ERR_STAT_WRITERESP Register Field Descriptions

Bit	Field	Type	Reset	Description
31-0	stat	R	0h	

6.2.6.327 DSS_PCR_BUS_SAFETY_CTRL Register (Offset = BE8h) [reset = X]

DSS_PCR_BUS_SAFETY_CTRL is shown in Figure 6-847 and described in Table 6-853.

Return to the Summary Table.

Figure 6-847. DSS_PCR_BUS_SAFETY_CTRL Register

31	30	29	28	27	26	25	24
RESERVED							
R/W-X							
23	22	21	20	19	18	17	16
type							
R-Fh							
15	14	13	12	11	10	9	8
RESERVED							err_clear
R/W-X							R/W-0h
7	6	5	4	3	2	1	0
RESERVED					enable		
R/W-X					R/W-7h		

Table 6-853. DSS_PCR_BUS_SAFETY_CTRL Register Field Descriptions

Bit	Field	Type	Reset	Description
31-24	RESERVED	R/W	X	
23-16	type	R	Fh	
15-9	RESERVED	R/W	X	
8	err_clear	R/W	0h	
7-3	RESERVED	R/W	X	
2-0	enable	R/W	7h	

6.2.6.328 DSS_PCR_BUS_SAFETY_FI Register (Offset = BECh) [reset = X]

DSS_PCR_BUS_SAFETY_FI is shown in Figure 6-848 and described in Table 6-854.

Return to the Summary Table.

Figure 6-848. DSS_PCR_BUS_SAFETY_FI Register

31	30	29	28	27	26	25	24

Copyright © 2025 Texas Instruments Incorporated

Figure 6-848. DSS_PCR_BUS_SAFETY_FI Register (continued)

safe							
R/W-0h							
23	22	21	20	19	18	17	16
main							
R/W-0h							
15	14	13	12	11	10	9	8
data							
R/W-0h							
7	6	5	4	3	2	1	0
RESERVED		ded	sec	global_safe_req	global_main_req	global_safe	global_main
R/W-X		R/W-0h	R/W-0h	R/W-0h	R/W-0h	R/W-0h	R/W-0h

Table 6-854. DSS_PCR_BUS_SAFETY_FI Register Field Descriptions

Bit	Field	Type	Reset	Description
31-24	safe	R/W	0h	
23-16	main	R/W	0h	
15-8	data	R/W	0h	
7-6	RESERVED	R/W	X	
5	ded	R/W	0h	
4	sec	R/W	0h	
3	global_safe_req	R/W	0h	
2	global_main_req	R/W	0h	
1	global_safe	R/W	0h	
0	global_main	R/W	0h	

6.2.6.329 DSS_PCR_BUS_SAFETY_ERR Register (Offset = BF0h) [reset = 0h]

DSS_PCR_BUS_SAFETY_ERR is shown in Figure 6-849 and described in Table 6-855.

Return to the Summary Table.

Figure 6-849. DSS_PCR_BUS_SAFETY_ERR Register

31	30	29	28	27	26	25	24	23	22	21	20	19	18	17	16
ded								sec							
R-0h								R-0h							
15	14	13	12	11	10	9	8	7	6	5	4	3	2	1	0
comp_check								comp_err							
R-0h								R-0h							

Table 6-855. DSS_PCR_BUS_SAFETY_ERR Register Field Descriptions

Bit	Field	Type	Reset	Description
31-24	ded	R	0h	
23-16	sec	R	0h	
15-8	comp_check	R	0h	
7-0	comp_err	R	0h	

Copyright © 2025 Texas Instruments Incorporated

6.2.6.330 DSS_PCR_BUS_SAFETY_ERR_STAT_DATA0 Register (Offset = BF4h) [reset = 0h]

DSS_PCR_BUS_SAFETY_ERR_STAT_DATA0 is shown in Figure 6-850 and described in Table 6-856.

Return to the Summary Table.

Figure 6-850. DSS_PCR_BUS_SAFETY_ERR_STAT_DATA0 Register

31	30	29	28	27	26	25	24	23	22	21	20	19	18	17	16	15	14	13	12	11	10	9	8	7	6	5	4	3	2	1	0
d3								d2								d1								d0							
R-0h								R-0h								R-0h								R-0h							

Table 6-856. DSS_PCR_BUS_SAFETY_ERR_STAT_DATA0 Register Field Descriptions

Bit	Field	Type	Reset	Description
31-24	d3	R	0h	
23-16	d2	R	0h	
15-8	d1	R	0h	
7-0	d0	R	0h	

6.2.6.331 DSS_PCR_BUS_SAFETY_ERR_STAT_CMD Register (Offset = BF8h) [reset = 0h]

DSS_PCR_BUS_SAFETY_ERR_STAT_CMD is shown in Figure 6-851 and described in Table 6-857.

Return to the Summary Table.

Figure 6-851. DSS_PCR_BUS_SAFETY_ERR_STAT_CMD Register

31	30	29	28	27	26	25	24	23	22	21	20	19	18	17	16	15	14	13	12	11	10	9	8	7	6	5	4	3	2	1	0
stat																															
R-0h																															

Table 6-857. DSS_PCR_BUS_SAFETY_ERR_STAT_CMD Register Field Descriptions

Bit	Field	Type	Reset	Description
31-0	stat	R	0h	

6.2.6.332 DSS_PCR_BUS_SAFETY_ERR_STAT_WRITE Register (Offset = BFCh) [reset = 0h]

DSS_PCR_BUS_SAFETY_ERR_STAT_WRITE is shown in Figure 6-852 and described in Table 6-858.

Return to the Summary Table.

Figure 6-852. DSS_PCR_BUS_SAFETY_ERR_STAT_WRITE Register

31	30	29	28	27	26	25	24	23	22	21	20	19	18	17	16	15	14	13	12	11	10	9	8	7	6	5	4	3	2	1	0
stat																															
R-0h																															

Table 6-858. DSS_PCR_BUS_SAFETY_ERR_STAT_WRITE Register Field Descriptions

Bit	Field	Type	Reset	Description
31-0	stat	R	0h	

6.2.6.333 DSS_PCR_BUS_SAFETY_ERR_STAT_READ Register (Offset = C00h) [reset = 0h]

DSS_PCR_BUS_SAFETY_ERR_STAT_READ is shown in Figure 6-853 and described in Table 6-859.

Return to the Summary Table.

Copyright © 2025 Texas Instruments Incorporated

Figure 6-853. DSS_PCR_BUS_SAFETY_ERR_STAT_READ Register

31	30	29	28	27	26	25	24	23	22	21	20	19	18	17	16	15	14	13	12	11	10	9	8	7	6	5	4	3	2	1	0
stat																															
R-0h																															

Table 6-859. DSS_PCR_BUS_SAFETY_ERR_STAT_READ Register Field Descriptions

Bit	Field	Type	Reset	Description
31-0	stat	R	0h	

6.2.6.334 DSS_PCR_BUS_SAFETY_ERR_STAT_WRITERESP Register (Offset = C04h) [reset = 0h]

DSS_PCR_BUS_SAFETY_ERR_STAT_WRITERESP is shown in Figure 6-854 and described in Table 6-860.

Return to the Summary Table.

Figure 6-854. DSS_PCR_BUS_SAFETY_ERR_STAT_WRITERESP Register

31	30	29	28	27	26	25	24	23	22	21	20	19	18	17	16	15	14	13	12	11	10	9	8	7	6	5	4	3	2	1	0
stat																															
R-0h																															

Table 6-860. DSS_PCR_BUS_SAFETY_ERR_STAT_WRITERESP Register Field Descriptions

Bit	Field	Type	Reset	Description
31-0	stat	R	0h	

6.2.6.335 DSS_HWA_DMA0_BUS_SAFETY_CTRL Register (Offset = C08h) [reset = X]

DSS_HWA_DMA0_BUS_SAFETY_CTRL is shown in Figure 6-855 and described in Table 6-861.

Return to the Summary Table.

Figure 6-855. DSS_HWA_DMA0_BUS_SAFETY_CTRL Register

31	30	29	28	27	26	25	24
RESERVED							
R/W-X							
23	22	21	20	19	18	17	16
type							
R-1Fh							
15	14	13	12	11	10	9	8
RESERVED							err_clear
R/W-X							R/W-0h
7	6	5	4	3	2	1	0
RESERVED						enable	
R/W-X						R/W-7h	

Table 6-861. DSS_HWA_DMA0_BUS_SAFETY_CTRL Register Field Descriptions

Bit	Field	Type	Reset	Description
31-24	RESERVED	R/W	X	
23-16	type	R	1Fh	
15-9	RESERVED	R/W	X	
8	err_clear	R/W	0h	

Copyright © 2025 Texas Instruments Incorporated

Table 6-861. DSS_HWA_DMA0_BUS_SAFETY_CTRL Register Field Descriptions (continued)

Bit	Field	Type	Reset	Description
7-3	RESERVED	R/W	X	
2-0	enable	R/W	7h	

6.2.6.336 DSS_HWA_DMA0_BUS_SAFETY_FI Register (Offset = C0Ch) [reset = X]

DSS_HWA_DMA0_BUS_SAFETY_FI is shown in Figure 6-856 and described in Table 6-862.

Return to the Summary Table.

Figure 6-856. DSS_HWA_DMA0_BUS_SAFETY_FI Register

31	30	29	28	27	26	25	24
safe							
R/W-0h							
23	22	21	20	19	18	17	16
main							
R/W-0h							
15	14	13	12	11	10	9	8
data							
R/W-0h							
7	6	5	4	3	2	1	0
RESERVED		ded	sec	global_safe_req	global_main_req	global_safe	global_main
R/W-X		R/W-0h	R/W-0h	R/W-0h	R/W-0h	R/W-0h	R/W-0h

Table 6-862. DSS_HWA_DMA0_BUS_SAFETY_FI Register Field Descriptions

Bit	Field	Type	Reset	Description
31-24	safe	R/W	0h	
23-16	main	R/W	0h	
15-8	data	R/W	0h	
7-6	RESERVED	R/W	X	
5	ded	R/W	0h	
4	sec	R/W	0h	
3	global_safe_req	R/W	0h	
2	global_main_req	R/W	0h	
1	global_safe	R/W	0h	
0	global_main	R/W	0h	

6.2.6.337 DSS_HWA_DMA0_BUS_SAFETY_ERR Register (Offset = C10h) [reset = 0h]

DSS_HWA_DMA0_BUS_SAFETY_ERR is shown in Figure 6-857 and described in Table 6-863.

Return to the Summary Table.

Figure 6-857. DSS_HWA_DMA0_BUS_SAFETY_ERR Register

31	30	29	28	27	26	25	24	23	22	21	20	19	18	17	16
ded								sec							
R-0h								R-0h							

Copyright © 2025 Texas Instruments Incorporated

Figure 6-857. DSS_HWA_DMA0_BUS_SAFETY_ERR Register (continued)

15	14	13	12	11	10	9	8	7	6	5	4	3	2	1	0
comp_check								comp_err							
R-0h								R-0h							

Table 6-863. DSS_HWA_DMA0_BUS_SAFETY_ERR Register Field Descriptions

Bit	Field	Type	Reset	Description
31-24	ded	R	0h	
23-16	sec	R	0h	
15-8	comp_check	R	0h	
7-0	comp_err	R	0h	

6.2.6.338 DSS_HWA_DMA0_BUS_SAFETY_ERR_STAT_DATA0 Register (Offset = C14h) [reset = 0h]

DSS_HWA_DMA0_BUS_SAFETY_ERR_STAT_DATA0 is shown in Figure 6-858 and described in Table 6-864.

Return to the Summary Table.

Figure 6-858. DSS_HWA_DMA0_BUS_SAFETY_ERR_STAT_DATA0 Register

31	30	29	28	27	26	25	24	23	22	21	20	19	18	17	16	15	14	13	12	11	10	9	8	7	6	5	4	3	2	1	0
d3								d2								d1								d0							
R-0h								R-0h								R-0h								R-0h							

Table 6-864. DSS_HWA_DMA0_BUS_SAFETY_ERR_STAT_DATA0 Register Field Descriptions

Bit	Field	Type	Reset	Description
31-24	d3	R	0h	
23-16	d2	R	0h	
15-8	d1	R	0h	
7-0	d0	R	0h	

6.2.6.339 DSS_HWA_DMA0_BUS_SAFETY_ERR_STAT_CMD Register (Offset = C18h) [reset = 0h]

DSS_HWA_DMA0_BUS_SAFETY_ERR_STAT_CMD is shown in Figure 6-859 and described in Table 6-865.

Return to the Summary Table.

Figure 6-859. DSS_HWA_DMA0_BUS_SAFETY_ERR_STAT_CMD Register

31	30	29	28	27	26	25	24	23	22	21	20	19	18	17	16	15	14	13	12	11	10	9	8	7	6	5	4	3	2	1	0
stat																															
R-0h																															

Table 6-865. DSS_HWA_DMA0_BUS_SAFETY_ERR_STAT_CMD Register Field Descriptions

Bit	Field	Type	Reset	Description
31-0	stat	R	0h	

6.2.6.340 DSS_HWA_DMA0_BUS_SAFETY_ERR_STAT_WRITE Register (Offset = C1Ch) [reset = 0h]

DSS_HWA_DMA0_BUS_SAFETY_ERR_STAT_WRITE is shown in Figure 6-860 and described in Table 6-866.

Return to the Summary Table.

Copyright © 2025 Texas Instruments Incorporated

Figure 6-860. DSS_HWA_DMA0_BUS_SAFETY_ERR_STAT_WRITE Register

31	30	29	28	27	26	25	24	23	22	21	20	19	18	17	16	15	14	13	12	11	10	9	8	7	6	5	4	3	2	1	0
stat																															
R-0h																															

Table 6-866. DSS_HWA_DMA0_BUS_SAFETY_ERR_STAT_WRITE Register Field Descriptions

Bit	Field	Type	Reset	Description
31-0	stat	R	0h	

6.2.6.341 DSS_HWA_DMA0_BUS_SAFETY_ERR_STAT_READ Register (Offset = C20h) [reset = 0h]

DSS_HWA_DMA0_BUS_SAFETY_ERR_STAT_READ is shown in Figure 6-861 and described in Table 6-867.

Return to the Summary Table.

Figure 6-861. DSS_HWA_DMA0_BUS_SAFETY_ERR_STAT_READ Register

31	30	29	28	27	26	25	24	23	22	21	20	19	18	17	16	15	14	13	12	11	10	9	8	7	6	5	4	3	2	1	0
stat																															
R-0h																															

Table 6-867. DSS_HWA_DMA0_BUS_SAFETY_ERR_STAT_READ Register Field Descriptions

Bit	Field	Type	Reset	Description
31-0	stat	R	0h	

6.2.6.342 DSS_HWA_DMA0_BUS_SAFETY_ERR_STAT_WRITERESP Register (Offset = C24h) [reset = 0h]

DSS_HWA_DMA0_BUS_SAFETY_ERR_STAT_WRITERESP is shown in Figure 6-862 and described in Table 6-868.

Return to the Summary Table.

Figure 6-862. DSS_HWA_DMA0_BUS_SAFETY_ERR_STAT_WRITERESP Register

31	30	29	28	27	26	25	24	23	22	21	20	19	18	17	16	15	14	13	12	11	10	9	8	7	6	5	4	3	2	1	0
stat																															
R-0h																															

Table 6-868. DSS_HWA_DMA0_BUS_SAFETY_ERR_STAT_WRITERESP Register Field Descriptions

Bit	Field	Type	Reset	Description
31-0	stat	R	0h	

6.2.6.343 DSS_HWA_DMA1_BUS_SAFETY_CTRL Register (Offset = C28h) [reset = X]

DSS_HWA_DMA1_BUS_SAFETY_CTRL is shown in Figure 6-863 and described in Table 6-869.

Return to the Summary Table.

Figure 6-863. DSS_HWA_DMA1_BUS_SAFETY_CTRL Register

31	30	29	28	27	26	25	24
RESERVED							
R/W-X							
23	22	21	20	19	18	17	16
type							

Copyright © 2025 Texas Instruments Incorporated

Figure 6-863. DSS_HWA_DMA1_BUS_SAFETY_CTRL Register (continued)

R-1Fh							
15	14	13	12	11	10	9	8
RESERVED							err_clear
R/W-X							R/W-0h
7	6	5	4	3	2	1	0
RESERVED						enable	
R/W-X						R/W-7h	

Table 6-869. DSS_HWA_DMA1_BUS_SAFETY_CTRL Register Field Descriptions

Bit	Field	Type	Reset	Description
31-24	RESERVED	R/W	X	
23-16	type	R	1Fh	
15-9	RESERVED	R/W	X	
8	err_clear	R/W	0h	
7-3	RESERVED	R/W	X	
2-0	enable	R/W	7h	

6.2.6.344 DSS_HWA_DMA1_BUS_SAFETY_FI Register (Offset = C2Ch) [reset = X]

DSS_HWA_DMA1_BUS_SAFETY_FI is shown in Figure 6-864 and described in Table 6-870.

Return to the Summary Table.

Figure 6-864. DSS_HWA_DMA1_BUS_SAFETY_FI Register

31	30	29	28	27	26	25	24
safe							
R/W-0h							
23	22	21	20	19	18	17	16
main							
R/W-0h							
15	14	13	12	11	10	9	8
data							
R/W-0h							
7	6	5	4	3	2	1	0
RESERVED		ded	sec	global_safe_req	global_main_req	global_safe	global_main
R/W-X		R/W-0h	R/W-0h	R/W-0h	R/W-0h	R/W-0h	R/W-0h

Table 6-870. DSS_HWA_DMA1_BUS_SAFETY_FI Register Field Descriptions

Bit	Field	Type	Reset	Description
31-24	safe	R/W	0h	
23-16	main	R/W	0h	
15-8	data	R/W	0h	
7-6	RESERVED	R/W	X	
5	ded	R/W	0h	
4	sec	R/W	0h	
3	global_safe_req	R/W	0h	

Copyright © 2025 Texas Instruments Incorporated

Table 6-870. DSS_HWA_DMA1_BUS_SAFETY_FI Register Field Descriptions (continued)

Bit	Field	Type	Reset	Description
2	global_main_req	R/W	0h	
1	global_safe	R/W	0h	
0	global_main	R/W	0h	

6.2.6.345 DSS_HWA_DMA1_BUS_SAFETY_ERR Register (Offset = C30h) [reset = 0h]

DSS_HWA_DMA1_BUS_SAFETY_ERR is shown in Figure 6-865 and described in Table 6-871.

Return to the Summary Table.

Figure 6-865. DSS_HWA_DMA1_BUS_SAFETY_ERR Register

31	30	29	28	27	26	25	24	23	22	21	20	19	18	17	16
ded								sec							
R-0h								R-0h							
15	14	13	12	11	10	9	8	7	6	5	4	3	2	1	0
comp_check								comp_err							
R-0h								R-0h							

Table 6-871. DSS_HWA_DMA1_BUS_SAFETY_ERR Register Field Descriptions

Bit	Field	Type	Reset	Description
31-24	ded	R	0h	
23-16	sec	R	0h	
15-8	comp_check	R	0h	
7-0	comp_err	R	0h	

6.2.6.346 DSS_HWA_DMA1_BUS_SAFETY_ERR_STAT_DATA0 Register (Offset = C34h) [reset = 0h]

DSS_HWA_DMA1_BUS_SAFETY_ERR_STAT_DATA0 is shown in Figure 6-866 and described in Table 6-872.

Return to the Summary Table.

Figure 6-866. DSS_HWA_DMA1_BUS_SAFETY_ERR_STAT_DATA0 Register

31	30	29	28	27	26	25	24	23	22	21	20	19	18	17	16	15	14	13	12	11	10	9	8	7	6	5	4	3	2	1	0
d3								d2								d1								d0							
R-0h								R-0h								R-0h								R-0h							

Table 6-872. DSS_HWA_DMA1_BUS_SAFETY_ERR_STAT_DATA0 Register Field Descriptions

Bit	Field	Type	Reset	Description
31-24	d3	R	0h	
23-16	d2	R	0h	
15-8	d1	R	0h	
7-0	d0	R	0h	

6.2.6.347 DSS_HWA_DMA1_BUS_SAFETY_ERR_STAT_CMD Register (Offset = C38h) [reset = 0h]

DSS_HWA_DMA1_BUS_SAFETY_ERR_STAT_CMD is shown in Figure 6-867 and described in Table 6-873.

Return to the Summary Table.

Copyright © 2025 Texas Instruments Incorporated

Figure 6-867. DSS_HWA_DMA1_BUS_SAFETY_ERR_STAT_CMD Register

31	30	29	28	27	26	25	24	23	22	21	20	19	18	17	16	15	14	13	12	11	10	9	8	7	6	5	4	3	2	1	0
stat																															
R-0h																															

Table 6-873. DSS_HWA_DMA1_BUS_SAFETY_ERR_STAT_CMD Register Field Descriptions

Bit	Field	Type	Reset	Description
31-0	stat	R	0h	

6.2.6.348 DSS_HWA_DMA1_BUS_SAFETY_ERR_STAT_WRITE Register (Offset = C3Ch) [reset = 0h]

DSS_HWA_DMA1_BUS_SAFETY_ERR_STAT_WRITE is shown in Figure 6-868 and described in Table 6-874.

Return to the Summary Table.

Figure 6-868. DSS_HWA_DMA1_BUS_SAFETY_ERR_STAT_WRITE Register

31	30	29	28	27	26	25	24	23	22	21	20	19	18	17	16	15	14	13	12	11	10	9	8	7	6	5	4	3	2	1	0
stat																															
R-0h																															

Table 6-874. DSS_HWA_DMA1_BUS_SAFETY_ERR_STAT_WRITE Register Field Descriptions

Bit	Field	Type	Reset	Description
31-0	stat	R	0h	

6.2.6.349 DSS_HWA_DMA1_BUS_SAFETY_ERR_STAT_READ Register (Offset = C40h) [reset = 0h]

DSS_HWA_DMA1_BUS_SAFETY_ERR_STAT_READ is shown in Figure 6-869 and described in Table 6-875.

Return to the Summary Table.

Figure 6-869. DSS_HWA_DMA1_BUS_SAFETY_ERR_STAT_READ Register

31	30	29	28	27	26	25	24	23	22	21	20	19	18	17	16	15	14	13	12	11	10	9	8	7	6	5	4	3	2	1	0
stat																															
R-0h																															

Table 6-875. DSS_HWA_DMA1_BUS_SAFETY_ERR_STAT_READ Register Field Descriptions

Bit	Field	Type	Reset	Description
31-0	stat	R	0h	

6.2.6.350 DSS_HWA_DMA1_BUS_SAFETY_ERR_STAT_WRITERESP Register (Offset = C44h) [reset = 7h]

DSS_HWA_DMA1_BUS_SAFETY_ERR_STAT_WRITERESP is shown in Figure 6-870 and described in Table 6-876.

Return to the Summary Table.

Figure 6-870. DSS_HWA_DMA1_BUS_SAFETY_ERR_STAT_WRITERESP Register

31	30	29	28	27	26	25	24	23	22	21	20	19	18	17	16	15	14	13	12	11	10	9	8	7	6	5	4	3	2	1	0
stat																															
R-7h																															

Copyright © 2025 Texas Instruments Incorporated

Table 6-876. DSS_HWA_DMA1_BUS_SAFETY_ERR_STAT_WRITERESP Register Field Descriptions

Bit	Field	Type	Reset	Description
31-0	stat	R	7h	

6.2.6.351 DSS_CM4_M_BUS_SAFETY_CTRL Register (Offset = C48h) [reset = X]

DSS_CM4_M_BUS_SAFETY_CTRL is shown in Figure 6-871 and described in Table 6-877.

Return to the Summary Table.

Figure 6-871. DSS_CM4_M_BUS_SAFETY_CTRL Register

31	30	29	28	27	26	25	24
RESERVED							
R/W-X							
23	22	21	20	19	18	17	16
type							
R-0h							
15	14	13	12	11	10	9	8
RESERVED							err_clear
R/W-X							R/W-1h
7	6	5	4	3	2	1	0
RESERVED						enable	
R/W-X						R/W-7h	

Table 6-877. DSS_CM4_M_BUS_SAFETY_CTRL Register Field Descriptions

Bit	Field	Type	Reset	Description
31-24	RESERVED	R/W	X	
23-16	type	R	0h	
15-9	RESERVED	R/W	X	
8	err_clear	R/W	1h	
7-3	RESERVED	R/W	X	
2-0	enable	R/W	7h	

6.2.6.352 DSS_CM4_M_BUS_SAFETY_FI Register (Offset = C4Ch) [reset = X]

DSS_CM4_M_BUS_SAFETY_FI is shown in Figure 6-872 and described in Table 6-878.

Return to the Summary Table.

Figure 6-872. DSS_CM4_M_BUS_SAFETY_FI Register

31	30	29	28	27	26	25	24
safe							
R/W-0h							
23	22	21	20	19	18	17	16
main							
R/W-0h							
15	14	13	12	11	10	9	8
data							
R/W-0h							

Copyright © 2025 Texas Instruments Incorporated

Figure 6-872. DSS_CM4_M_BUS_SAFETY_FI Register (continued)

7	6	5	4	3	2	1	0
RESERVED		ded	sec	global_safe_req	global_main_req	global_safe	global_main
R/W-X		R/W-0h	R/W-0h	R/W-0h	R/W-0h	R/W-0h	R/W-0h

Table 6-878. DSS_CM4_M_BUS_SAFETY_FI Register Field Descriptions

Bit	Field	Type	Reset	Description
31-24	safe	R/W	0h	
23-16	main	R/W	0h	
15-8	data	R/W	0h	
7-6	RESERVED	R/W	X	
5	ded	R/W	0h	
4	sec	R/W	0h	
3	global_safe_req	R/W	0h	
2	global_main_req	R/W	0h	
1	global_safe	R/W	0h	
0	global_main	R/W	0h	

6.2.6.353 DSS_CM4_M_BUS_SAFETY_ERR Register (Offset = C50h) [reset = 0h]

DSS_CM4_M_BUS_SAFETY_ERR is shown in Figure 6-873 and described in Table 6-879.

Return to the Summary Table.

Figure 6-873. DSS_CM4_M_BUS_SAFETY_ERR Register

31	30	29	28	27	26	25	24	23	22	21	20	19	18	17	16
ded								sec							
R-0h								R-0h							
15	14	13	12	11	10	9	8	7	6	5	4	3	2	1	0
comp_check								comp_err							
R-0h								R-0h							

Table 6-879. DSS_CM4_M_BUS_SAFETY_ERR Register Field Descriptions

Bit	Field	Type	Reset	Description
31-24	ded	R	0h	
23-16	sec	R	0h	
15-8	comp_check	R	0h	
7-0	comp_err	R	0h	

6.2.6.354 DSS_CM4_M_BUS_SAFETY_ERR_STAT_DATA0 Register (Offset = C54h) [reset = 0h]

DSS_CM4_M_BUS_SAFETY_ERR_STAT_DATA0 is shown in Figure 6-874 and described in Table 6-880.

Return to the Summary Table.

Figure 6-874. DSS_CM4_M_BUS_SAFETY_ERR_STAT_DATA0 Register

31	30	29	28	27	26	25	24	23	22	21	20	19	18	17	16	15	14	13	12	11	10	9	8	7	6	5	4	3	2	1	0
d3								d2								d1								d0							
R-0h								R-0h								R-0h								R-0h							

Copyright © 2025 Texas Instruments Incorporated

Table 6-880. DSS_CM4_M_BUS_SAFETY_ERR_STAT_DATA0 Register Field Descriptions

Bit	Field	Type	Reset	Description
31-24	d3	R	0h	
23-16	d2	R	0h	
15-8	d1	R	0h	
7-0	d0	R	0h	

6.2.6.355 DSS_CM4_M_BUS_SAFETY_ERR_STAT_CMD Register (Offset = C58h) [reset = 0h]

DSS_CM4_M_BUS_SAFETY_ERR_STAT_CMD is shown in Figure 6-875 and described in Table 6-881.

Return to the Summary Table.

Figure 6-875. DSS_CM4_M_BUS_SAFETY_ERR_STAT_CMD Register

31	30	29	28	27	26	25	24	23	22	21	20	19	18	17	16	15	14	13	12	11	10	9	8	7	6	5	4	3	2	1	0
stat																															
R-0h																															

Table 6-881. DSS_CM4_M_BUS_SAFETY_ERR_STAT_CMD Register Field Descriptions

Bit	Field	Type	Reset	Description
31-0	stat	R	0h	

6.2.6.356 DSS_CM4_M_BUS_SAFETY_ERR_STAT_WRITE Register (Offset = C5Ch) [reset = 0h]

DSS_CM4_M_BUS_SAFETY_ERR_STAT_WRITE is shown in Figure 6-876 and described in Table 6-882.

Return to the Summary Table.

Figure 6-876. DSS_CM4_M_BUS_SAFETY_ERR_STAT_WRITE Register

31	30	29	28	27	26	25	24	23	22	21	20	19	18	17	16	15	14	13	12	11	10	9	8	7	6	5	4	3	2	1	0
stat																															
R-0h																															

Table 6-882. DSS_CM4_M_BUS_SAFETY_ERR_STAT_WRITE Register Field Descriptions

Bit	Field	Type	Reset	Description
31-0	stat	R	0h	

6.2.6.357 DSS_CM4_M_BUS_SAFETY_ERR_STAT_READ Register (Offset = C60h) [reset = 0h]

DSS_CM4_M_BUS_SAFETY_ERR_STAT_READ is shown in Figure 6-877 and described in Table 6-883.

Return to the Summary Table.

Figure 6-877. DSS_CM4_M_BUS_SAFETY_ERR_STAT_READ Register

31	30	29	28	27	26	25	24	23	22	21	20	19	18	17	16	15	14	13	12	11	10	9	8	7	6	5	4	3	2	1	0
stat																															
R-0h																															

Table 6-883. DSS_CM4_M_BUS_SAFETY_ERR_STAT_READ Register Field Descriptions

Bit	Field	Type	Reset	Description
31-0	stat	R	0h	

Copyright © 2025 Texas Instruments Incorporated

6.2.6.358 DSS_CM4_M_BUS_SAFETY_ERR_STAT_WRITERESP Register (Offset = C64h) [reset = 0h]

DSS_CM4_M_BUS_SAFETY_ERR_STAT_WRITERESP is shown in Figure 6-878 and described in Table 6-884.

Return to the Summary Table.

Figure 6-878. DSS_CM4_M_BUS_SAFETY_ERR_STAT_WRITERESP Register

31	30	29	28	27	26	25	24	23	22	21	20	19	18	17	16	15	14	13	12	11	10	9	8	7	6	5	4	3	2	1	0
stat																															
R-0h																															

Table 6-884. DSS_CM4_M_BUS_SAFETY_ERR_STAT_WRITERESP Register Field Descriptions

Bit	Field	Type	Reset	Description
31-0	stat	R	0h	

6.2.6.359 DSS_CM4_S_BUS_SAFETY_CTRL Register (Offset = C68h) [reset = X]

DSS_CM4_S_BUS_SAFETY_CTRL is shown in Figure 6-879 and described in Table 6-885.

Return to the Summary Table.

Figure 6-879. DSS_CM4_S_BUS_SAFETY_CTRL Register

31	30	29	28	27	26	25	24
RESERVED							
R/W-X							
23	22	21	20	19	18	17	16
type							
R-Fh							
15	14	13	12	11	10	9	8
RESERVED							err_clear
R/W-X							R/W-0h
7	6	5	4	3	2	1	0
RESERVED						enable	
R/W-X						R/W-7h	

Table 6-885. DSS_CM4_S_BUS_SAFETY_CTRL Register Field Descriptions

Bit	Field	Type	Reset	Description
31-24	RESERVED	R/W	X	
23-16	type	R	Fh	
15-9	RESERVED	R/W	X	
8	err_clear	R/W	0h	
7-3	RESERVED	R/W	X	
2-0	enable	R/W	7h	

6.2.6.360 DSS_CM4_S_BUS_SAFETY_FI Register (Offset = C6Ch) [reset = X]

DSS_CM4_S_BUS_SAFETY_FI is shown in Figure 6-880 and described in Table 6-886.

Return to the Summary Table.

Copyright © 2025 Texas Instruments Incorporated

Figure 6-880. DSS_CM4_S_BUS_SAFETY_FI Register

31	30	29	28	27	26	25	24
safe							
R/W-0h							
23	22	21	20	19	18	17	16
main							
R/W-0h							
15	14	13	12	11	10	9	8
data							
R/W-0h							
7	6	5	4	3	2	1	0
RESERVED		ded	sec	global_safe_req	global_main_req	global_safe	global_main
R/W-X		R/W-0h	R/W-0h	R/W-0h	R/W-0h	R/W-0h	R/W-0h

Table 6-886. DSS_CM4_S_BUS_SAFETY_FI Register Field Descriptions

Bit	Field	Type	Reset	Description
31-24	safe	R/W	0h	
23-16	main	R/W	0h	
15-8	data	R/W	0h	
7-6	RESERVED	R/W	X	
5	ded	R/W	0h	
4	sec	R/W	0h	
3	global_safe_req	R/W	0h	
2	global_main_req	R/W	0h	
1	global_safe	R/W	0h	
0	global_main	R/W	0h	

6.2.6.361 DSS_CM4_S_BUS_SAFETY_ERR Register (Offset = C70h) [reset = 0h]

DSS_CM4_S_BUS_SAFETY_ERR is shown in Figure 6-881 and described in Table 6-887.

Return to the Summary Table.

Figure 6-881. DSS_CM4_S_BUS_SAFETY_ERR Register

31	30	29	28	27	26	25	24	23	22	21	20	19	18	17	16
ded								sec							
R-0h								R-0h							
15	14	13	12	11	10	9	8	7	6	5	4	3	2	1	0
comp_check								comp_err							
R-0h								R-0h							

Table 6-887. DSS_CM4_S_BUS_SAFETY_ERR Register Field Descriptions

Bit	Field	Type	Reset	Description
31-24	ded	R	0h	
23-16	sec	R	0h	
15-8	comp_check	R	0h	

Copyright © 2025 Texas Instruments Incorporated

Table 6-887. DSS_CM4_S_BUS_SAFETY_ERR Register Field Descriptions (continued)

Bit	Field	Type	Reset	Description
7-0	comp_err	R	0h	

6.2.6.362 DSS_CM4_S_BUS_SAFETY_ERR_STAT_DATA0 Register (Offset = C74h) [reset = 0h]

DSS_CM4_S_BUS_SAFETY_ERR_STAT_DATA0 is shown in Figure 6-882 and described in Table 6-888.

Return to the Summary Table.

Figure 6-882. DSS_CM4_S_BUS_SAFETY_ERR_STAT_DATA0 Register

31	30	29	28	27	26	25	24	23	22	21	20	19	18	17	16	15	14	13	12	11	10	9	8	7	6	5	4	3	2	1	0
d3								d2								d1								d0							
R-0h								R-0h								R-0h								R-0h							

Table 6-888. DSS_CM4_S_BUS_SAFETY_ERR_STAT_DATA0 Register Field Descriptions

Bit	Field	Type	Reset	Description
31-24	d3	R	0h	
23-16	d2	R	0h	
15-8	d1	R	0h	
7-0	d0	R	0h	

6.2.6.363 DSS_CM4_S_BUS_SAFETY_ERR_STAT_CMD Register (Offset = C78h) [reset = 0h]

DSS_CM4_S_BUS_SAFETY_ERR_STAT_CMD is shown in Figure 6-883 and described in Table 6-889.

Return to the Summary Table.

Figure 6-883. DSS_CM4_S_BUS_SAFETY_ERR_STAT_CMD Register

31	30	29	28	27	26	25	24	23	22	21	20	19	18	17	16	15	14	13	12	11	10	9	8	7	6	5	4	3	2	1	0
stat																															
R-0h																															

Table 6-889. DSS_CM4_S_BUS_SAFETY_ERR_STAT_CMD Register Field Descriptions

Bit	Field	Type	Reset	Description
31-0	stat	R	0h	

6.2.6.364 DSS_CM4_S_BUS_SAFETY_ERR_STAT_WRITE Register (Offset = C7Ch) [reset = 0h]

DSS_CM4_S_BUS_SAFETY_ERR_STAT_WRITE is shown in Figure 6-884 and described in Table 6-890.

Return to the Summary Table.

Figure 6-884. DSS_CM4_S_BUS_SAFETY_ERR_STAT_WRITE Register

31	30	29	28	27	26	25	24	23	22	21	20	19	18	17	16	15	14	13	12	11	10	9	8	7	6	5	4	3	2	1	0
stat																															
R-0h																															

Table 6-890. DSS_CM4_S_BUS_SAFETY_ERR_STAT_WRITE Register Field Descriptions

Bit	Field	Type	Reset	Description
31-0	stat	R	0h	

Copyright © 2025 Texas Instruments Incorporated

6.2.6.365 DSS_CM4_S_BUS_SAFETY_ERR_STAT_READ Register (Offset = C80h) [reset = 0h]

DSS_CM4_S_BUS_SAFETY_ERR_STAT_READ is shown in Figure 6-885 and described in Table 6-891.

Return to the Summary Table.

Figure 6-885. DSS_CM4_S_BUS_SAFETY_ERR_STAT_READ Register

31	30	29	28	27	26	25	24	23	22	21	20	19	18	17	16	15	14	13	12	11	10	9	8	7	6	5	4	3	2	1	0
stat																															
R-0h																															

Table 6-891. DSS_CM4_S_BUS_SAFETY_ERR_STAT_READ Register Field Descriptions

Bit	Field	Type	Reset	Description
31-0	stat	R	0h	

6.2.6.366 DSS_CM4_S_BUS_SAFETY_ERR_STAT_WRITERESP Register (Offset = C84h) [reset = 0h]

DSS_CM4_S_BUS_SAFETY_ERR_STAT_WRITERESP is shown in Figure 6-886 and described in Table 6-892.

Return to the Summary Table.

Figure 6-886. DSS_CM4_S_BUS_SAFETY_ERR_STAT_WRITERESP Register

31	30	29	28	27	26	25	24	23	22	21	20	19	18	17	16	15	14	13	12	11	10	9	8	7	6	5	4	3	2	1	0
stat																															
R-0h																															

Table 6-892. DSS_CM4_S_BUS_SAFETY_ERR_STAT_WRITERESP Register Field Descriptions

Bit	Field	Type	Reset	Description
31-0	stat	R	0h	

6.2.6.367 DSS_MBOX_BUS_SAFETY_CTRL Register (Offset = C88h) [reset = X]

DSS_MBOX_BUS_SAFETY_CTRL is shown in Figure 6-887 and described in Table 6-893.

Return to the Summary Table.

Figure 6-887. DSS_MBOX_BUS_SAFETY_CTRL Register

31	30	29	28	27	26	25	24
RESERVED							
R/W-X							
23	22	21	20	19	18	17	16
type							
R-1Fh							
15	14	13	12	11	10	9	8
RESERVED							err_clear
R/W-X							R/W-0h
7	6	5	4	3	2	1	0
RESERVED						enable	
R/W-X						R/W-7h	

Copyright © 2025 Texas Instruments Incorporated

Table 6-893. DSS_MBOX_BUS_SAFETY_CTRL Register Field Descriptions

Bit	Field	Type	Reset	Description
31-24	RESERVED	R/W	X	
23-16	type	R	1Fh	
15-9	RESERVED	R/W	X	
8	err_clear	R/W	0h	
7-3	RESERVED	R/W	X	
2-0	enable	R/W	7h	

6.2.6.368 DSS_MBOX_BUS_SAFETY_FI Register (Offset = C8Ch) [reset = X]

DSS_MBOX_BUS_SAFETY_FI is shown in Figure 6-888 and described in Table 6-894.

Return to the Summary Table.

Figure 6-888. DSS_MBOX_BUS_SAFETY_FI Register

31	30	29	28	27	26	25	24
safe							
R/W-0h							
23	22	21	20	19	18	17	16
main							
R/W-0h							
15	14	13	12	11	10	9	8
data							
R/W-0h							
7	6	5	4	3	2	1	0
RESERVED		ded	sec	global_safe_req	global_main_req	global_safe	global_main
R/W-X		R/W-0h	R/W-0h	R/W-0h	R/W-0h	R/W-0h	R/W-0h

Table 6-894. DSS_MBOX_BUS_SAFETY_FI Register Field Descriptions

Bit	Field	Type	Reset	Description
31-24	safe	R/W	0h	
23-16	main	R/W	0h	
15-8	data	R/W	0h	
7-6	RESERVED	R/W	X	
5	ded	R/W	0h	
4	sec	R/W	0h	
3	global_safe_req	R/W	0h	
2	global_main_req	R/W	0h	
1	global_safe	R/W	0h	
0	global_main	R/W	0h	

6.2.6.369 DSS_MBOX_BUS_SAFETY_ERR Register (Offset = C90h) [reset = 0h]

DSS_MBOX_BUS_SAFETY_ERR is shown in Figure 6-889 and described in Table 6-895.

Return to the Summary Table.

Copyright © 2025 Texas Instruments Incorporated

Figure 6-889. DSS_MBOX_BUS_SAFETY_ERR Register

31	30	29	28	27	26	25	24	23	22	21	20	19	18	17	16
ded								sec							
R-0h								R-0h							
15	14	13	12	11	10	9	8	7	6	5	4	3	2	1	0
comp_check								comp_err							
R-0h								R-0h							

Table 6-895. DSS_MBOX_BUS_SAFETY_ERR Register Field Descriptions

Bit	Field	Type	Reset	Description
31-24	ded	R	0h	
23-16	sec	R	0h	
15-8	comp_check	R	0h	
7-0	comp_err	R	0h	

6.2.6.370 DSS_MBOX_BUS_SAFETY_ERR_STAT_DATA0 Register (Offset = C94h) [reset = 0h]

DSS_MBOX_BUS_SAFETY_ERR_STAT_DATA0 is shown in Figure 6-890 and described in Table 6-896.

Return to the Summary Table.

Figure 6-890. DSS_MBOX_BUS_SAFETY_ERR_STAT_DATA0 Register

31	30	29	28	27	26	25	24	23	22	21	20	19	18	17	16	15	14	13	12	11	10	9	8	7	6	5	4	3	2	1	0
d3								d2								d1								d0							
R-0h								R-0h								R-0h								R-0h							

Table 6-896. DSS_MBOX_BUS_SAFETY_ERR_STAT_DATA0 Register Field Descriptions

Bit	Field	Type	Reset	Description
31-24	d3	R	0h	
23-16	d2	R	0h	
15-8	d1	R	0h	
7-0	d0	R	0h	

6.2.6.371 DSS_MBOX_BUS_SAFETY_ERR_STAT_CMD Register (Offset = C98h) [reset = 0h]

DSS_MBOX_BUS_SAFETY_ERR_STAT_CMD is shown in Figure 6-891 and described in Table 6-897.

Return to the Summary Table.

Figure 6-891. DSS_MBOX_BUS_SAFETY_ERR_STAT_CMD Register

31	30	29	28	27	26	25	24	23	22	21	20	19	18	17	16	15	14	13	12	11	10	9	8	7	6	5	4	3	2	1	0
stat																															
R-0h																															

Table 6-897. DSS_MBOX_BUS_SAFETY_ERR_STAT_CMD Register Field Descriptions

Bit	Field	Type	Reset	Description
31-0	stat	R	0h	

Copyright © 2025 Texas Instruments Incorporated

6.2.6.372 DSS_MBOX_BUS_SAFETY_ERR_STAT_WRITE Register (Offset = C9Ch) [reset = 0h]

DSS_MBOX_BUS_SAFETY_ERR_STAT_WRITE is shown in Figure 6-892 and described in Table 6-898.

Return to the Summary Table.

Figure 6-892. DSS_MBOX_BUS_SAFETY_ERR_STAT_WRITE Register

31	30	29	28	27	26	25	24	23	22	21	20	19	18	17	16	15	14	13	12	11	10	9	8	7	6	5	4	3	2	1	0
stat																															
R-0h																															

Table 6-898. DSS_MBOX_BUS_SAFETY_ERR_STAT_WRITE Register Field Descriptions

Bit	Field	Type	Reset	Description
31-0	stat	R	0h	

6.2.6.373 DSS_MBOX_BUS_SAFETY_ERR_STAT_READ Register (Offset = CA0h) [reset = 0h]

DSS_MBOX_BUS_SAFETY_ERR_STAT_READ is shown in Figure 6-893 and described in Table 6-899.

Return to the Summary Table.

Figure 6-893. DSS_MBOX_BUS_SAFETY_ERR_STAT_READ Register

31	30	29	28	27	26	25	24	23	22	21	20	19	18	17	16	15	14	13	12	11	10	9	8	7	6	5	4	3	2	1	0
stat																															
R-0h																															

Table 6-899. DSS_MBOX_BUS_SAFETY_ERR_STAT_READ Register Field Descriptions

Bit	Field	Type	Reset	Description
31-0	stat	R	0h	

6.2.6.374 DSS_MBOX_BUS_SAFETY_ERR_STAT_WRITERESP Register (Offset = CA4h) [reset = 0h]

DSS_MBOX_BUS_SAFETY_ERR_STAT_WRITERESP is shown in Figure 6-894 and described in Table 6-900.

Return to the Summary Table.

Figure 6-894. DSS_MBOX_BUS_SAFETY_ERR_STAT_WRITERESP Register

31	30	29	28	27	26	25	24	23	22	21	20	19	18	17	16	15	14	13	12	11	10	9	8	7	6	5	4	3	2	1	0
stat																															
R-0h																															

Table 6-900. DSS_MBOX_BUS_SAFETY_ERR_STAT_WRITERESP Register Field Descriptions

Bit	Field	Type	Reset	Description
31-0	stat	R	0h	

6.2.6.375 HW_SPARE_RW0 Register (Offset = FD0h) [reset = 0h]

HW_SPARE_RW0 is shown in Figure 6-895 and described in Table 6-901.

Return to the Summary Table.

Figure 6-895. HW_SPARE_RW0 Register

31	30	29	28	27	26	25	24	23	22	21	20	19	18	17	16	15	14	13	12	11	10	9	8	7	6	5	4	3	2	1	0
hw_spare_rw0																															

Copyright © 2025 Texas Instruments Incorporated

Figure 6-895. HW_SPARE_RW0 Register (continued)

R/W-0h

Table 6-901. HW_SPARE_RW0 Register Field Descriptions

Bit	Field	Type	Reset	Description
31-0	hw_spare_rw0	R/W	0h	Reserved for HW R&D

6.2.6.376 HW_SPARE_RW1 Register (Offset = FD4h) [reset = 0h]

HW_SPARE_RW1 is shown in Figure 6-896 and described in Table 6-902.

Return to the Summary Table.

Figure 6-896. HW_SPARE_RW1 Register

31	30	29	28	27	26	25	24	23	22	21	20	19	18	17	16	15	14	13	12	11	10	9	8	7	6	5	4	3	2	1	0
hw_spare_rw1																															
R/W-0h																															

Table 6-902. HW_SPARE_RW1 Register Field Descriptions

Bit	Field	Type	Reset	Description
31-0	hw_spare_rw1	R/W	0h	Reserved for HW R&D

6.2.6.377 HW_SPARE_RW2 Register (Offset = FD8h) [reset = 0h]

HW_SPARE_RW2 is shown in Figure 6-897 and described in Table 6-903.

Return to the Summary Table.

Figure 6-897. HW_SPARE_RW2 Register

31	30	29	28	27	26	25	24	23	22	21	20	19	18	17	16	15	14	13	12	11	10	9	8	7	6	5	4	3	2	1	0
hw_spare_rw2																															
R/W-0h																															

Table 6-903. HW_SPARE_RW2 Register Field Descriptions

Bit	Field	Type	Reset	Description
31-0	hw_spare_rw2	R/W	0h	Reserved for HW R&D

6.2.6.378 HW_SPARE_RW3 Register (Offset = FDCh) [reset = 0h]

HW_SPARE_RW3 is shown in Figure 6-898 and described in Table 6-904.

Return to the Summary Table.

Figure 6-898. HW_SPARE_RW3 Register

31	30	29	28	27	26	25	24	23	22	21	20	19	18	17	16	15	14	13	12	11	10	9	8	7	6	5	4	3	2	1	0
hw_spare_rw3																															
R/W-0h																															

Table 6-904. HW_SPARE_RW3 Register Field Descriptions

Bit	Field	Type	Reset	Description
31-0	hw_spare_rw3	R/W	0h	Reserved for HW R&D

Copyright © 2025 Texas Instruments Incorporated

6.2.6.379 HW_SPARE_RO0 Register (Offset = FE0h) [reset = 0h]

HW_SPARE_RO0 is shown in Figure 6-899 and described in Table 6-905.

Return to the Summary Table.

Figure 6-899. HW_SPARE_RO0 Register

31	30	29	28	27	26	25	24	23	22	21	20	19	18	17	16	15	14	13	12	11	10	9	8	7	6	5	4	3	2	1	0
hw_spare_ro0																															
R-0h																															

Table 6-905. HW_SPARE_RO0 Register Field Descriptions

Bit	Field	Type	Reset	Description
31-0	hw_spare_ro0	R	0h	Reserved for HW R&D

6.2.6.380 HW_SPARE_RO1 Register (Offset = FE4h) [reset = 0h]

HW_SPARE_RO1 is shown in Figure 6-900 and described in Table 6-906.

Return to the Summary Table.

Figure 6-900. HW_SPARE_RO1 Register

31	30	29	28	27	26	25	24	23	22	21	20	19	18	17	16	15	14	13	12	11	10	9	8	7	6	5	4	3	2	1	0
hw_spare_ro1																															
R-0h																															

Table 6-906. HW_SPARE_RO1 Register Field Descriptions

Bit	Field	Type	Reset	Description
31-0	hw_spare_ro1	R	0h	Reserved for HW R&D

6.2.6.381 HW_SPARE_RO2 Register (Offset = FE8h) [reset = 0h]

HW_SPARE_RO2 is shown in Figure 6-901 and described in Table 6-907.

Return to the Summary Table.

Figure 6-901. HW_SPARE_RO2 Register

31	30	29	28	27	26	25	24	23	22	21	20	19	18	17	16	15	14	13	12	11	10	9	8	7	6	5	4	3	2	1	0
hw_spare_ro2																															
R-0h																															

Table 6-907. HW_SPARE_RO2 Register Field Descriptions

Bit	Field	Type	Reset	Description
31-0	hw_spare_ro2	R	0h	Reserved for HW R&D

6.2.6.382 HW_SPARE_RO3 Register (Offset = FECh) [reset = 0h]

HW_SPARE_RO3 is shown in Figure 6-902 and described in Table 6-908.

Return to the Summary Table.

Figure 6-902. HW_SPARE_RO3 Register

31	30	29	28	27	26	25	24	23	22	21	20	19	18	17	16	15	14	13	12	11	10	9	8	7	6	5	4	3	2	1	0
hw_spare_ro3																															

Copyright © 2025 Texas Instruments Incorporated

Figure 6-902. HW_SPARE_RO3 Register (continued)

R-0h

Table 6-908. HW_SPARE_RO3 Register Field Descriptions

Bit	Field	Type	Reset	Description
31-0	hw_spare_ro3	R	0h	Reserved for HW R&D

6.2.6.383 HW_SPARE_WPH Register (Offset = FF0h) [reset = 0h]

HW_SPARE_WPH is shown in Figure 6-903 and described in Table 6-909.

Return to the Summary Table.

Figure 6-903. HW_SPARE_WPH Register

31	30	29	28	27	26	25	24	23	22	21	20	19	18	17	16	15	14	13	12	11	10	9	8	7	6	5	4	3	2	1	0
proc																															
R/W-0h																															

Table 6-909. HW_SPARE_WPH Register Field Descriptions

Bit	Field	Type	Reset	Description
31-0	proc	R/W	0h	Write pulse bit field: For bits 0 to 7: Wrting 1'b1 : Generates pulse interrupt to corresponding proc from DSP.

6.2.6.384 HW_SPARE_REC Register (Offset = FF4h) [reset = 0h]

HW_SPARE_REC is shown in Figure 6-904 and described in Table 6-910.

Return to the Summary Table.

Figure 6-904. HW_SPARE_REC Register

31	30	29	28	27	26	25	24
hw_spare_rec31	hw_spare_rec30	hw_spare_rec29	hw_spare_rec28	hw_spare_rec27	hw_spare_rec26	hw_spare_rec25	hw_spare_rec24
R/W-0h	R/W-0h	R/W-0h	R/W-0h	R/W-0h	R/W-0h	R/W-0h	R/W-0h
23	22	21	20	19	18	17	16
hw_spare_rec23	hw_spare_rec22	hw_spare_rec21	hw_spare_rec20	hw_spare_rec19	hw_spare_rec18	hw_spare_rec17	hw_spare_rec16
R/W-0h	R/W-0h	R/W-0h	R/W-0h	R/W-0h	R/W-0h	R/W-0h	R/W-0h
15	14	13	12	11	10	9	8
hw_spare_rec15	hw_spare_rec14	hw_spare_rec13	hw_spare_rec12	hw_spare_rec11	hw_spare_rec10	hw_spare_rec9	hw_spare_rec8
R/W-0h	R/W-0h	R/W-0h	R/W-0h	R/W-0h	R/W-0h	R/W-0h	R/W-0h
7	6	5	4	3	2	1	0
hw_spare_rec7	hw_spare_rec6	hw_spare_rec5	hw_spare_rec4	hw_spare_rec3	hw_spare_rec2	hw_spare_rec1	hw_spare_rec0
R/W-0h	R/W-0h	R/W-0h	R/W-0h	R/W-0h	R/W-0h	R/W-0h	R/W-0h

Table 6-910. HW_SPARE_REC Register Field Descriptions

Bit	Field	Type	Reset	Description
31	hw_spare_rec31	R/W	0h	Reserved for HW R&D
30	hw_spare_rec30	R/W	0h	Reserved for HW R&D
29	hw_spare_rec29	R/W	0h	Reserved for HW R&D

Copyright © 2025 Texas Instruments Incorporated

Table 6-910. HW_SPARE_REC Register Field Descriptions (continued)

Bit	Field	Type	Reset	Description
28	hw_spare_rec28	R/W	0h	Reserved for HW R&D
27	hw_spare_rec27	R/W	0h	Reserved for HW R&D
26	hw_spare_rec26	R/W	0h	Reserved for HW R&D
25	hw_spare_rec25	R/W	0h	Reserved for HW R&D
24	hw_spare_rec24	R/W	0h	Reserved for HW R&D
23	hw_spare_rec23	R/W	0h	Reserved for HW R&D
22	hw_spare_rec22	R/W	0h	Reserved for HW R&D
21	hw_spare_rec21	R/W	0h	Reserved for HW R&D
20	hw_spare_rec20	R/W	0h	Reserved for HW R&D
19	hw_spare_rec19	R/W	0h	Reserved for HW R&D
18	hw_spare_rec18	R/W	0h	Reserved for HW R&D
17	hw_spare_rec17	R/W	0h	Reserved for HW R&D
16	hw_spare_rec16	R/W	0h	Reserved for HW R&D
15	hw_spare_rec15	R/W	0h	Reserved for HW R&D
14	hw_spare_rec14	R/W	0h	Reserved for HW R&D
13	hw_spare_rec13	R/W	0h	Reserved for HW R&D
12	hw_spare_rec12	R/W	0h	Reserved for HW R&D
11	hw_spare_rec11	R/W	0h	Reserved for HW R&D
10	hw_spare_rec10	R/W	0h	Reserved for HW R&D
9	hw_spare_rec9	R/W	0h	Reserved for HW R&D
8	hw_spare_rec8	R/W	0h	Reserved for HW R&D
7	hw_spare_rec7	R/W	0h	Reserved for HW R&D
6	hw_spare_rec6	R/W	0h	Reserved for HW R&D
5	hw_spare_rec5	R/W	0h	Reserved for HW R&D
4	hw_spare_rec4	R/W	0h	Reserved for HW R&D
3	hw_spare_rec3	R/W	0h	Reserved for HW R&D
2	hw_spare_rec2	R/W	0h	Reserved for HW R&D
1	hw_spare_rec1	R/W	0h	Reserved for HW R&D
0	hw_spare_rec0	R/W	0h	Reserved for HW R&D

6.2.6.385 LOCK0_KICK0 Register (Offset = 1008h) [reset = 0h]

LOCK0_KICK0 is shown in Figure 6-905 and described in Table 6-911.

Return to the Summary Table.

- KICK0 component

Figure 6-905. LOCK0_KICK0 Register

31	30	29	28	27	26	25	24	23	22	21	20	19	18	17	16	15	14	13	12	11	10	9	8	7	6	5	4	3	2	1	0
LOCK0_kick0																															
R/W-0h																															

Table 6-911. LOCK0_KICK0 Register Field Descriptions

Bit	Field	Type	Reset	Description
31-0	LOCK0_kick0	R/W	0h	- KICK0 component

Copyright © 2025 Texas Instruments Incorporated

6.2.6.386 LOCK0_KICK1 Register (Offset = 100Ch) [reset = 0h]

LOCK0_KICK1 is shown in Figure 6-906 and described in Table 6-912.

Return to the Summary Table.

- KICK1 component

Figure 6-906. LOCK0_KICK1 Register

31	30	29	28	27	26	25	24	23	22	21	20	19	18	17	16	15	14	13	12	11	10	9	8	7	6	5	4	3	2	1	0
LOCK0_kick1																															
R/W-0h																															

Table 6-912. LOCK0_KICK1 Register Field Descriptions

Bit	Field	Type	Reset	Description
31-0	LOCK0_kick1	R/W	0h	- KICK1 component

6.2.6.387 intr_raw_status Register (Offset = 1010h) [reset = X]

intr_raw_status is shown in Figure 6-907 and described in Table 6-913.

Return to the Summary Table.

Interrupt Raw Status/Set Register

Figure 6-907. intr_raw_status Register

31	30	29	28	27	26	25	24
RESERVED							
R/W-X							
23	22	21	20	19	18	17	16
RESERVED							
R/W-X							
15	14	13	12	11	10	9	8
RESERVED							
R/W-X							
7	6	5	4	3	2	1	0
RESERVED				proxy_err	kick_err	addr_err	prot_err
R/W-X				R/W1S-0h	R/W1S-0h	R/W1S-0h	R/W1S-0h

Table 6-913. intr_raw_status Register Field Descriptions

Bit	Field	Type	Reset	Description
31-4	RESERVED	R/W	X	
3	proxy_err	R/W1S	0h	Proxy0 access violation error. Raw status is read. Write a 1 to set the status. Writing a 0 has no effect.
2	kick_err	R/W1S	0h	Kick access violation error. Raw status is read. Write a 1 to set the status. Writing a 0 has no effect.
1	addr_err	R/W1S	0h	Addressing violation error. Raw status is read. Write a 1 to set the status. Writing a 0 has no effect.
0	prot_err	R/W1S	0h	Protection violation error. Raw status is read. Write a 1 to set the status. Writing a 0 has no effect.

Copyright © 2025 Texas Instruments Incorporated

6.2.6.388 intr_enabled_status_clear Register (Offset = 1014h) [reset = X]

intr_enabled_status_clear is shown in Figure 6-908 and described in Table 6-914.

Return to the Summary Table.

Interrupt Enabled Status/Clear register

Figure 6-908. intr_enabled_status_clear Register

31	30	29	28	27	26	25	24
RESERVED							
R/W-X							
23	22	21	20	19	18	17	16
RESERVED							
R/W-X							
15	14	13	12	11	10	9	8
RESERVED							
R/W-X							
7	6	5	4	3	2	1	0
RESERVED				enabled_proxy_err	enabled_kick_err	enabled_addr_err	enabled_prot_err
R/W-X				R/W1C-0h	R/W1C-0h	R/W1C-0h	R/W1C-0h

Table 6-914. intr_enabled_status_clear Register Field Descriptions

Bit	Field	Type	Reset	Description
31-4	RESERVED	R/W	X	
3	enabled_proxy_err	R/W1C	0h	Proxy0 access violation error. Enabled status is read. Write a 1 to clear the status. Writing a 0 has no effect.
2	enabled_kick_err	R/W1C	0h	Kick access violation error. Enabled status is read. Write a 1 to clear the status. Writing a 0 has no effect.
1	enabled_addr_err	R/W1C	0h	Addressing violation error. Enabled status is read. Write a 1 to clear the status. Writing a 0 has no effect.
0	enabled_prot_err	R/W1C	0h	Protection violation error. Enabled status is read. Write a 1 to clear the status. Writing a 0 has no effect.

6.2.6.389 intr_enable Register (Offset = 1018h) [reset = X]

intr_enable is shown in Figure 6-909 and described in Table 6-915.

Return to the Summary Table.

Interrupt Enable register

Figure 6-909. intr_enable Register

31	30	29	28	27	26	25	24
RESERVED							
R/W-X							
23	22	21	20	19	18	17	16
RESERVED							
R/W-X							
15	14	13	12	11	10	9	8
RESERVED							

Copyright © 2025 Texas Instruments Incorporated

Figure 6-909. intr_enable Register (continued)

R/W-X							
7	6	5	4	3	2	1	0
RESERVED				proxy_err_en	kick_err_en	addr_err_en	prot_err_en
R/W-X				R/W1S-0h	R/W1S-0h	R/W1S-0h	R/W1S-0h

Table 6-915. intr_enable Register Field Descriptions

Bit	Field	Type	Reset	Description
31-4	RESERVED	R/W	X	
3	proxy_err_en	R/W1S	0h	Proxy0 access violation error enable. Write a 1 to set the enable. Writing a 0 has no effect.
2	kick_err_en	R/W1S	0h	Kick access violation error enable. Write a 1 to set the enable. Writing a 0 has no effect.
1	addr_err_en	R/W1S	0h	Addressing violation error enable. Write a 1 to set the enable. Writing a 0 has no effect.
0	prot_err_en	R/W1S	0h	Protection violation error enable. Write a 1 to set the enable. Writing a 0 has no effect.

6.2.6.390 intr_enable_clear Register (Offset = 101Ch) [reset = X]

intr_enable_clear is shown in Figure 6-910 and described in Table 6-916.

Return to the Summary Table.

Interrupt Enable Clear register

Figure 6-910. intr_enable_clear Register

31	30	29	28	27	26	25	24
RESERVED							
R/W-X							
23	22	21	20	19	18	17	16
RESERVED							
R/W-X							
15	14	13	12	11	10	9	8
RESERVED							
R/W-X							
7	6	5	4	3	2	1	0
RESERVED				proxy_err_en_clr	kick_err_en_clr	addr_err_en_clr	prot_err_en_clr
R/W-X				R/W1C-0h	R/W1C-0h	R/W1C-0h	R/W1C-0h

Table 6-916. intr_enable_clear Register Field Descriptions

Bit	Field	Type	Reset	Description
31-4	RESERVED	R/W	X	
3	proxy_err_en_clr	R/W1C	0h	Proxy0 access violation error enable clear. Write a 1 to clear the enable. Writing a 0 has no effect.
2	kick_err_en_clr	R/W1C	0h	Kick access violation error enable clear. Write a 1 to clear the enable. Writing a 0 has no effect.
1	addr_err_en_clr	R/W1C	0h	Addressing violation error enable clear. Write a 1 to clear the enable. Writing a 0 has no effect.

Copyright © 2025 Texas Instruments Incorporated

Table 6-916. intr_enable_clear Register Field Descriptions (continued)

Bit	Field	Type	Reset	Description
0	prot_err_en_clr	R/W1C	0h	Protection violation error enable clear. Write a 1 to clear the enable. Writing a 0 has no effect.

6.2.6.391 eoi Register (Offset = 1020h) [reset = X]

eoi is shown in Figure 6-911 and described in Table 6-917.

Return to the Summary Table.

EOI register

Figure 6-911. eoi Register

31	30	29	28	27	26	25	24	23	22	21	20	19	18	17	16
RESERVED															
R/W-X															
15	14	13	12	11	10	9	8	7	6	5	4	3	2	1	0
RESERVED								eoi_vector							
R/W-X								R/W-0h							

Table 6-917. eoi Register Field Descriptions

Bit	Field	Type	Reset	Description
31-8	RESERVED	R/W	X	
7-0	eoi_vector	R/W	0h	EOI vector value. Write this with interrupt distribution value in the chip.

6.2.6.392 fault_address Register (Offset = 1024h) [reset = 0h]

fault_address is shown in Figure 6-912 and described in Table 6-918.

Return to the Summary Table.

Fault Address register

Figure 6-912. fault_address Register

31	30	29	28	27	26	25	24	23	22	21	20	19	18	17	16	15	14	13	12	11	10	9	8	7	6	5	4	3	2	1	0
fault_addr																															
R-0h																															

Table 6-918. fault_address Register Field Descriptions

Bit	Field	Type	Reset	Description
31-0	fault_addr	R	0h	Fault Address.

6.2.6.393 fault_type_status Register (Offset = 1028h) [reset = X]

fault_type_status is shown in Figure 6-913 and described in Table 6-919.

Return to the Summary Table.

Fault Type Status register

Figure 6-913. fault_type_status Register

31	30	29	28	27	26	25	24

Copyright © 2025 Texas Instruments Incorporated

Figure 6-913. fault_type_status Register (continued)

RESERVED							
R-X							
23	22	21	20	19	18	17	16
RESERVED							
R-X							
15	14	13	12	11	10	9	8
RESERVED							
R-X							
7	6	5	4	3	2	1	0
RESERVED	fault_ns	fault_type					
R-X	R-0h	R-0h					

Table 6-919. fault_type_status Register Field Descriptions

Bit	Field	Type	Reset	Description
31-7	RESERVED	R	X	
6	fault_ns	R	0h	Non-secure access.
5-0	fault_type	R	0h	Fault Type 10_0000 = Supervisor read fault - priv = 1 dir = 1 dtype ! = 1 01_0000 = Supervisor write fault - priv = 1 dir = 0 00_1000 = Supervisor execute fault - priv = 1 dir = 1 dtype = 1 00_0100 = User read fault - priv = 0 dir = 1 dtype = 1 00_0010 = User write fault - priv = 0 dir = 0 00_0001 = User execute fault - priv = 0 dir = 1 dtype = 1 00_0000 = No fault

6.2.6.394 fault_attr_status Register (Offset = 102Ch) [reset = 0h]

fault_attr_status is shown in Figure 6-914 and described in Table 6-920.

Return to the Summary Table.

Fault Attribute Status register

Figure 6-914. fault_attr_status Register

31	30	29	28	27	26	25	24	23	22	21	20	19	18	17	16
fault_xid												fault_routeid			
R-0h												R-0h			
15	14	13	12	11	10	9	8	7	6	5	4	3	2	1	0
fault_routeid								fault_privid							
R-0h								R-0h							

Table 6-920. fault_attr_status Register Field Descriptions

Bit	Field	Type	Reset	Description
31-20	fault_xid	R	0h	XID.
19-8	fault_routeid	R	0h	Route ID.
7-0	fault_privid	R	0h	Privilege ID.

6.2.6.395 fault_clear Register (Offset = 1030h) [reset = X]

fault_clear is shown in Figure 6-915 and described in Table 6-921.

Copyright © 2025 Texas Instruments Incorporated

Return to the Summary Table.

Fault Clear register

Figure 6-915. fault_clear Register

31	30	29	28	27	26	25	24
RESERVED							
W-X							
23	22	21	20	19	18	17	16
RESERVED							
W-X							
15	14	13	12	11	10	9	8
RESERVED							
W-X							
7	6	5	4	3	2	1	0
RESERVED							fault_clr
W-X							W-0h

Table 6-921. fault_clear Register Field Descriptions

Bit	Field	Type	Reset	Description
31-1	RESERVED	W	X	
0	fault_clr	W	0h	Fault clear. Writing a 1 clears the current fault. Writing a 0 has no effect.

Copyright © 2025 Texas Instruments Incorporated

6.2.7 MSS_CTRL_memory_map Registers

Table 6-922 lists the MSS_CTRL_memory_map registers. All register offset addresses not listed in Table 6-922 should be considered as reserved locations and the register contents should not be modified.

Table 6-922. MSS_CTRL_MEMORY_MAP Registers

Offset	Acronym	Register Name	Section
0h	PID	PID register	PID Register (Offset = 0h) [reset = 61800213h]
4h	MSS_SW_INT		MSS_SW_INT Register (Offset = 4h) [reset = X]
8h	MSS_CAPEVNT_SEL		MSS_CAPEVNT_SEL Register (Offset = 8h) [reset = X]
Ch	MSS_DMA_REQ_SEL		MSS_DMA_REQ_SEL Register (Offset = Ch) [reset = 0h]
10h	MSS_DMA1_REQ_SEL		MSS_DMA1_REQ_SEL Register (Offset = 10h) [reset = 0h]
14h	MSS_IRQ_REQ_SEL		MSS_IRQ_REQ_SEL Register (Offset = 14h) [reset = 0h]
18h	MSS_SPI_TRIG_SRC		MSS_SPI_TRIG_SRC Register (Offset = 18h) [reset = X]
1Ch	MSS_ATCM_MEM_INIT		MSS_ATCM_MEM_INIT Register (Offset = 1Ch) [reset = X]
20h	MSS_ATCM_MEM_INIT_DONE		MSS_ATCM_MEM_INIT_DONE Register (Offset = 20h) [reset = X]
24h	MSS_ATCM_MEM_INIT_STATUS		MSS_ATCM_MEM_INIT_STATUS Register (Offset = 24h) [reset = X]
28h	MSS_BTCM_MEM_INIT		MSS_BTCM_MEM_INIT Register (Offset = 28h) [reset = X]
2Ch	MSS_BTCM_MEM_INIT_DONE		MSS_BTCM_MEM_INIT_DONE Register (Offset = 2Ch) [reset = X]
30h	MSS_BTCM_MEM_INIT_STATUS		MSS_BTCM_MEM_INIT_STATUS Register (Offset = 30h) [reset = X]
34h	MSS_L2_MEM_INIT		MSS_L2_MEM_INIT Register (Offset = 34h) [reset = X]
38h	MSS_L2_MEM_INIT_DONE		MSS_L2_MEM_INIT_DONE Register (Offset = 38h) [reset = X]

Copyright © 2025 Texas Instruments Incorporated

Table 6-922. MSS_CTRL_MEMORY_MAP Registers (continued)

Offset	Acronym	Register Name	Section
3Ch	MSS_L2_MEM_INIT_STATUS		MSS_L2_MEM_INIT_STATUS Register (Offset = 3Ch) [reset = X]
40h	MSS_MAILBOX_MEM_INIT		MSS_MAILBOX_MEM_INIT Register (Offset = 40h) [reset = X]
44h	MSS_MAIlBOX_MEM_INIT_DONE		MSS_MAIlBOX_MEM_INIT_DONE Register (Offset = 44h) [reset = X]
48h	MSS_MAILBOX_MEM_INIT_STATUS		MSS_MAILBOX_MEM_INIT_STATUS Register (Offset = 48h) [reset = X]
4Ch	MSS_RETRAM_MEM_INIT		MSS_RETRAM_MEM_INIT Register (Offset = 4Ch) [reset = X]
50h	MSS_RETRAM_MEM_INIT_DONE		MSS_RETRAM_MEM_INIT_DONE Register (Offset = 50h) [reset = X]
54h	MSS_RETRAM_MEM_INIT_STATUS		MSS_RETRAM_MEM_INIT_STATUS Register (Offset = 54h) [reset = X]
58h	MSS_SPIA_MEM_INIT		MSS_SPIA_MEM_INIT Register (Offset = 58h) [reset = X]
5Ch	MSS_SPIA_MEM_INIT_DONE		MSS_SPIA_MEM_INIT_DONE Register (Offset = 5Ch) [reset = X]
60h	MSS_SPIA_MEM_INIT_STATUS		MSS_SPIA_MEM_INIT_STATUS Register (Offset = 60h) [reset = X]
64h	MSS_SPIB_MEM_INIT		MSS_SPIB_MEM_INIT Register (Offset = 64h) [reset = X]
68h	MSS_SPIB_MEM_INIT_DONE		MSS_SPIB_MEM_INIT_DONE Register (Offset = 68h) [reset = X]
6Ch	MSS_SPIB_MEM_INIT_STATUS		MSS_SPIB_MEM_INIT_STATUS Register (Offset = 6Ch) [reset = X]
70h	MSS_TPCC_MEMINIT_START		MSS_TPCC_MEMINIT_START Register (Offset = 70h) [reset = X]
74h	MSS_TPCC_MEMINIT_DONE		MSS_TPCC_MEMINIT_DONE Register (Offset = 74h) [reset = X]

Copyright © 2025 Texas Instruments Incorporated

Table 6-922. MSS_CTRL_MEMORY_MAP Registers (continued)

Offset	Acronym	Register Name	Section
78h	MSS_TPCC_MEMINIT_STATUS		MSS_TPCC_MEMINIT_STATUS Register (Offset = 78h) [reset = X]
7Ch	MSS_GPADC_MEM_INIT		MSS_GPADC_MEM_INIT Register (Offset = 7Ch) [reset = X]
80h	MSS_GPADC_MEM_INIT_DONE		MSS_GPADC_MEM_INIT_DONE Register (Offset = 80h) [reset = X]
84h	MSS_GPADC_MEM_INIT_STATUS		MSS_GPADC_MEM_INIT_STATUS Register (Offset = 84h) [reset = X]
88h	MSS_SPIA_CFG		MSS_SPIA_CFG Register (Offset = 88h) [reset = X]
8Ch	MSS_SPIB_CFG		MSS_SPIB_CFG Register (Offset = 8Ch) [reset = X]
90h	MSS_EPWM_CFG		MSS_EPWM_CFG Register (Offset = 90h) [reset = 0F000000h]
94h	MSS_GIO_CFG		MSS_GIO_CFG Register (Offset = 94h) [reset = 0h]
98h	MSS_MCAN_FE_SELECT		MSS_MCAN_FE_SELECT Register (Offset = 98h) [reset = X]
9Ch	HW_SPARE_REG1		HW_SPARE_REG1 Register (Offset = 9Ch) [reset = 0h]
A0h	MSS_MCANA_INT_CLR		MSS_MCANA_INT_CLR Register (Offset = A0h) [reset = 0h]
A4h	MSS_MCANA_INT_MASK		MSS_MCANA_INT_MASK Register (Offset = A4h) [reset = 0h]
A8h	MSS_MCANA_INT_STAT		MSS_MCANA_INT_STAT Register (Offset = A8h) [reset = 0h]
ACh	HW_SPARE_REG2		HW_SPARE_REG2 Register (Offset = ACh) [reset = 0h]
B0h	CCC_ERR_STATUS		CCC_ERR_STATUS Register (Offset = B0h) [reset = X]
B4h	CCCA_CFG0		CCCA_CFG0 Register (Offset = B4h) [reset = 0h]

Copyright © 2025 Texas Instruments Incorporated

Table 6-922. MSS_CTRL_MEMORY_MAP Registers (continued)

Offset	Acronym	Register Name	Section
B8h	CCCA_CFG1		CCCA_CFG1 Register (Offset = B8h) [reset = 0h]
BCh	CCCA_CFG2		CCCA_CFG2 Register (Offset = BCh) [reset = 0h]
C0h	CCCA_CFG3		CCCA_CFG3 Register (Offset = C0h) [reset = 0h]
C4h	CCCA_CNTVAL		CCCA_CNTVAL Register (Offset = C4h) [reset = 0h]
C8h	CCCB_CFG0		CCCB_CFG0 Register (Offset = C8h) [reset = 0h]
CCh	CCCB_CFG1		CCCB_CFG1 Register (Offset = CCh) [reset = 0h]
D0h	CCCB_CFG2		CCCB_CFG2 Register (Offset = D0h) [reset = 0h]
D4h	CCCB_CFG3		CCCB_CFG3 Register (Offset = D4h) [reset = 0h]
D8h	CCCB_CNTVAL		CCCB_CNTVAL Register (Offset = D8h) [reset = 0h]
DCh	CCC_DCC_COMMON		CCC_DCC_COMMON Register (Offset = DCh) [reset = X]
E0h	R5_GLOBAL_CONFIG		R5_GLOBAL_CONFIG Register (Offset = E0h) [reset = X]
E4h	R5_AHB_EN		R5_AHB_EN Register (Offset = E4h) [reset = X]
E8h	R5A_AHB_BASE		R5A_AHB_BASE Register (Offset = E8h) [reset = X]
ECh	R5A_AHB_SIZE		R5A_AHB_SIZE Register (Offset = ECh) [reset = X]
F0h	R5B_AHB_BASE		R5B_AHB_BASE Register (Offset = F0h) [reset = X]
F4h	R5B_AHB_SIZE		R5B_AHB_SIZE Register (Offset = F4h) [reset = X]
F8h	R5_TCM_EXT_ERR_EN		R5_TCM_EXT_ERR_EN Register (Offset = F8h) [reset = X]
FCh	R5_TCM_ERR_EN		R5_TCM_ERR_EN Register (Offset = FCh) [reset = X]
100h	R5_INIT_TCM		R5_INIT_TCM Register (Offset = 100h) [reset = X]

Copyright © 2025 Texas Instruments Incorporated

Table 6-922. MSS_CTRL_MEMORY_MAP Registers (continued)

Offset	Acronym	Register Name	Section
104h	R5_TCM_ECC_WRENZ_EN		R5_TCM_ECC_WRENZ_EN Register (Offset = 104h) [reset = X]
108h	ESM_GATING0		ESM_GATING0 Register (Offset = 108h) [reset = FFFFFFFFh]
10Ch	ESM_GATING1		ESM_GATING1 Register (Offset = 10Ch) [reset = FFFFFFFFh]
110h	ESM_GATING2		ESM_GATING2 Register (Offset = 110h) [reset = FFFFFFFFh]
114h	ESM_GATING3		ESM_GATING3 Register (Offset = 114h) [reset = FFFFFFFFh]
118h	ESM_GATING4		ESM_GATING4 Register (Offset = 118h) [reset = FFFFFFFFh]
11Ch	ESM_GATING5		ESM_GATING5 Register (Offset = 11Ch) [reset = FFFFFFFFh]
120h	ESM_GATING6		ESM_GATING6 Register (Offset = 120h) [reset = FFFFFFFFh]
124h	ESM_GATING7		ESM_GATING7 Register (Offset = 124h) [reset = FFFFFFFFh]
128h	ERR_PARITY_ATCM0		ERR_PARITY_ATCM0 Register (Offset = 128h) [reset = X]
12Ch	ERR_PARITY_ATCM1		ERR_PARITY_ATCM1 Register (Offset = 12Ch) [reset = X]
130h	ERR_PARITY_B0TCM0		ERR_PARITY_B0TCM0 Register (Offset = 130h) [reset = X]
134h	ERR_PARITY_B0TCM1		ERR_PARITY_B0TCM1 Register (Offset = 134h) [reset = X]
138h	ERR_PARITY_B1TCM0		ERR_PARITY_B1TCM0 Register (Offset = 138h) [reset = X]
13Ch	ERR_PARITY_B1TCM1		ERR_PARITY_B1TCM1 Register (Offset = 13Ch) [reset = X]
140h	TCM_PARITY_CTRL		TCM_PARITY_CTRL Register (Offset = 140h) [reset = X]

Copyright © 2025 Texas Instruments Incorporated

Table 6-922. MSS_CTRL_MEMORY_MAP Registers (continued)

Offset	Acronym	Register Name	Section
144h	TCM_PARITY_ERRFRC		TCM_PARITY_ERRFRC Register (Offset = 144h) [reset = X]
148h	HW_SPARE_REG3		HW_SPARE_REG3 Register (Offset = 148h) [reset = 0h]
14Ch	SPIA_IO_CFG		SPIA_IO_CFG Register (Offset = 14Ch) [reset = X]
150h	SPIB_IO_CFG		SPIB_IO_CFG Register (Offset = 150h) [reset = X]
154h	SPI_HOST_IRQ		SPI_HOST_IRQ Register (Offset = 154h) [reset = X]
158h	TPTC_DBS_CONFIG		TPTC_DBS_CONFIG Register (Offset = 158h) [reset = X]
15Ch	TPCC_PARITY_CTRL		TPCC_PARITY_CTRL Register (Offset = 15Ch) [reset = X]
160h	TPCC_PARITY_STATUS		TPCC_PARITY_STATUS Register (Offset = 160h) [reset = X]
164h	MSS_DBG_ACK_CTL0		MSS_DBG_ACK_CTL0 Register (Offset = 164h) [reset = X]
168h	MSS_DBG_ACK_CTL1		MSS_DBG_ACK_CTL1 Register (Offset = 168h) [reset = X]
16Ch	CPSW_CONTROL		CPSW_CONTROL Register (Offset = 16Ch) [reset = X]
170h	MSS_TPCC_A_ERRAGG_MASK		MSS_TPCC_A_ERRAGG_MASK Register (Offset = 170h) [reset = X]
174h	MSS_TPCC_A_ERRAGG_STATUS		MSS_TPCC_A_ERRAGG_STATUS Register (Offset = 174h) [reset = X]
178h	MSS_TPCC_A_ERRAGG_STATUS_RAW		MSS_TPCC_A_ERRAGG_STATUS_RAW Register (Offset = 178h) [reset = X]
17Ch	MSS_TPCC_A_INTAGG_MASK		MSS_TPCC_A_INTAGG_MASK Register (Offset = 17Ch) [reset = X]
180h	MSS_TPCC_A_INTAGG_STATUS		MSS_TPCC_A_INTAGG_STATUS Register (Offset = 180h) [reset = X]
184h	MSS_TPCC_A_INTAGG_STATUS_RAW		MSS_TPCC_A_INTAGG_STATUS_RAW Register (Offset = 184h) [reset = X]

Copyright © 2025 Texas Instruments Incorporated

Table 6-922. MSS_CTRL_MEMORY_MAP Registers (continued)

Offset	Acronym	Register Name	Section
188h	MSS_TPCC_B_ERRAGG_MASK		MSS_TPCC_B_ERRAGG_MASK Register (Offset = 188h) [reset = X]
18Ch	MSS_TPCC_B_ERRAGG_STATUS		MSS_TPCC_B_ERRAGG_STATUS Register (Offset = 18Ch) [reset = X]
190h	MSS_TPCC_B_ERRAGG_STATUS_RAW		MSS_TPCC_B_ERRAGG_STATUS_RAW Register (Offset = 190h) [reset = X]
194h	MSS_TPCC_B_INTAGG_MASK		MSS_TPCC_B_INTAGG_MASK Register (Offset = 194h) [reset = X]
198h	MSS_TPCC_B_INTAGG_STATUS		MSS_TPCC_B_INTAGG_STATUS Register (Offset = 198h) [reset = X]
19Ch	MSS_TPCC_B_INTAGG_STATUS_RAW		MSS_TPCC_B_INTAGG_STATUS_RAW Register (Offset = 19Ch) [reset = X]
1A0h	MSS_BUS_SAFETY_CTRL		MSS_BUS_SAFETY_CTRL Register (Offset = 1A0h) [reset = X]
1A4h	MSS_CR5A_AXI_RD_BUS_SAFETY_CTRL		MSS_CR5A_AXI_RD_BUS_SAFETY_CTRL Register (Offset = 1A4h) [reset = X]
1A8h	MSS_CR5A_AXI_RD_BUS_SAFETY_FI		MSS_CR5A_AXI_RD_BUS_SAFETY_FI Register (Offset = 1A8h) [reset = X]
1ACh	MSS_CR5A_AXI_RD_BUS_SAFETY_ERR		MSS_CR5A_AXI_RD_BUS_SAFETY_ERR Register (Offset = 1ACh) [reset = 0h]
1B0h	MSS_CR5A_AXI_RD_BUS_SAFETY_ERR_STAT_DATA0		MSS_CR5A_AXI_RD_BUS_SAFETY_ERR_STAT_DATA0 Register (Offset = 1B0h) [reset = X]
1B4h	MSS_CR5A_AXI_RD_BUS_SAFETY_ERR_STAT_CMD		MSS_CR5A_AXI_RD_BUS_SAFETY_ERR_STAT_CMD Register (Offset = 1B4h) [reset = 0h]
1B8h	MSS_CR5A_AXI_RD_BUS_SAFETY_ERR_STAT_READ		MSS_CR5A_AXI_RD_BUS_SAFETY_ERR_STAT_READ Register (Offset = 1B8h) [reset = 0h]
1BCh	MSS_CR5B_AXI_RD_BUS_SAFETY_CTRL		MSS_CR5B_AXI_RD_BUS_SAFETY_CTRL Register (Offset = 1BCh) [reset = X]

Copyright © 2025 Texas Instruments Incorporated

Table 6-922. MSS_CTRL_MEMORY_MAP Registers (continued)

Offset	Acronym	Register Name	Section
1C0h	MSS_CR5B_AXI_RD_BUS_SAFETY_FI		MSS_CR5B_AXI_RD_BUS_SAFETY_FI Register (Offset = 1C0h) [reset = X]
1C4h	MSS_CR5B_AXI_RD_BUS_SAFETY_ERR		MSS_CR5B_AXI_RD_BUS_SAFETY_ERR Register (Offset = 1C4h) [reset = 0h]
1C8h	MSS_CR5B_AXI_RD_BUS_SAFETY_ERR_STAT_DATA0		MSS_CR5B_AXI_RD_BUS_SAFETY_ERR_STAT_DATA0 Register (Offset = 1C8h) [reset = X]
1CCh	MSS_CR5B_AXI_RD_BUS_SAFETY_ERR_STAT_CMD		MSS_CR5B_AXI_RD_BUS_SAFETY_ERR_STAT_CMD Register (Offset = 1CCh) [reset = 0h]
1D0h	MSS_CR5B_AXI_RD_BUS_SAFETY_ERR_STAT_READ		MSS_CR5B_AXI_RD_BUS_SAFETY_ERR_STAT_READ Register (Offset = 1D0h) [reset = 0h]
1D4h	MSS_CR5A_AXI_WR_BUS_SAFETY_CTRL		MSS_CR5A_AXI_WR_BUS_SAFETY_CTRL Register (Offset = 1D4h) [reset = X]
1D8h	MSS_CR5A_AXI_WR_BUS_SAFETY_FI		MSS_CR5A_AXI_WR_BUS_SAFETY_FI Register (Offset = 1D8h) [reset = X]
1DCh	MSS_CR5A_AXI_WR_BUS_SAFETY_ERR		MSS_CR5A_AXI_WR_BUS_SAFETY_ERR Register (Offset = 1DCh) [reset = 0h]
1E0h	MSS_CR5A_AXI_WR_BUS_SAFETY_ERR_STAT_DATA0		MSS_CR5A_AXI_WR_BUS_SAFETY_ERR_STAT_DATA0 Register (Offset = 1E0h) [reset = X]
1E4h	MSS_CR5A_AXI_WR_BUS_SAFETY_ERR_STAT_CMD		MSS_CR5A_AXI_WR_BUS_SAFETY_ERR_STAT_CMD Register (Offset = 1E4h) [reset = 0h]
1E8h	MSS_CR5A_AXI_WR_BUS_SAFETY_ERR_STAT_WRITE		MSS_CR5A_AXI_WR_BUS_SAFETY_ERR_STAT_WRITE Register (Offset = 1E8h) [reset = 0h]
1ECh	MSS_CR5A_AXI_WR_BUS_SAFETY_ERR_STAT_WRITERESP		MSS_CR5A_AXI_WR_BUS_SAFETY_ERR_STAT_WRITERESP Register (Offset = 1ECh) [reset = 0h]
1F0h	MSS_CR5B_AXI_WR_BUS_SAFETY_CTRL		MSS_CR5B_AXI_WR_BUS_SAFETY_CTRL Register (Offset = 1F0h) [reset = X]

Copyright © 2025 Texas Instruments Incorporated

Table 6-922. MSS_CTRL_MEMORY_MAP Registers (continued)

Offset	Acronym	Register Name	Section
1F4h	MSS_CR5B_AXI_WR_BUS_SAFETY_FI		MSS_CR5B_AXI_WR_BUS_SAFETY_FI Register (Offset = 1F4h) [reset = X]
1F8h	MSS_CR5B_AXI_WR_BUS_SAFETY_ERR		MSS_CR5B_AXI_WR_BUS_SAFETY_ERR Register (Offset = 1F8h) [reset = 0h]
1FCh	MSS_CR5B_AXI_WR_BUS_SAFETY_ERR_STAT_DATA0		MSS_CR5B_AXI_WR_BUS_SAFETY_ERR_STAT_DATA0 Register (Offset = 1FCh) [reset = X]
200h	MSS_CR5B_AXI_WR_BUS_SAFETY_ERR_STAT_CMD		MSS_CR5B_AXI_WR_BUS_SAFETY_ERR_STAT_CMD Register (Offset = 200h) [reset = 0h]
204h	MSS_CR5B_AXI_WR_BUS_SAFETY_ERR_STAT_WRITE		MSS_CR5B_AXI_WR_BUS_SAFETY_ERR_STAT_WRITE Register (Offset = 204h) [reset = 0h]
208h	MSS_CR5B_AXI_WR_BUS_SAFETY_ERR_STAT_WRITERESP		MSS_CR5B_AXI_WR_BUS_SAFETY_ERR_STAT_WRITERESP Register (Offset = 208h) [reset = 0h]
20Ch	MSS_CR5A_AXI_S_BUS_SAFETY_CTRL		MSS_CR5A_AXI_S_BUS_SAFETY_CTRL Register (Offset = 20Ch) [reset = X]
210h	MSS_CR5A_AXI_S_BUS_SAFETY_FI		MSS_CR5A_AXI_S_BUS_SAFETY_FI Register (Offset = 210h) [reset = X]
214h	MSS_CR5A_AXI_S_BUS_SAFETY_ERR		MSS_CR5A_AXI_S_BUS_SAFETY_ERR Register (Offset = 214h) [reset = 0h]
218h	MSS_CR5A_AXI_S_BUS_SAFETY_ERR_STAT_DATA0		MSS_CR5A_AXI_S_BUS_SAFETY_ERR_STAT_DATA0 Register (Offset = 218h) [reset = X]
21Ch	MSS_CR5A_AXI_S_BUS_SAFETY_ERR_STAT_CMD		MSS_CR5A_AXI_S_BUS_SAFETY_ERR_STAT_CMD Register (Offset = 21Ch) [reset = 0h]
220h	MSS_CR5A_AXI_S_BUS_SAFETY_ERR_STAT_WRITE		MSS_CR5A_AXI_S_BUS_SAFETY_ERR_STAT_WRITE Register (Offset = 220h) [reset = 0h]
224h	MSS_CR5A_AXI_S_BUS_SAFETY_ERR_STAT_READ		MSS_CR5A_AXI_S_BUS_SAFETY_ERR_STAT_READ Register (Offset = 224h) [reset = 0h]

Copyright © 2025 Texas Instruments Incorporated

Table 6-922. MSS_CTRL_MEMORY_MAP Registers (continued)

Offset	Acronym	Register Name	Section
228h	MSS_CR5A_AXI_S_BUS_SAFETY_ERR_STAT_WRITERESP		MSS_CR5A_AXI_S_BUS_SAFETY_ERR_STAT_WRITERESP Register (Offset = 228h) [reset = 0h]
22Ch	MSS_CR5B_AXI_S_BUS_SAFETY_CTRL		MSS_CR5B_AXI_S_BUS_SAFETY_CTRL Register (Offset = 22Ch) [reset = X]
230h	MSS_CR5B_AXI_S_BUS_SAFETY_FI		MSS_CR5B_AXI_S_BUS_SAFETY_FI Register (Offset = 230h) [reset = X]
234h	MSS_CR5B_AXI_S_BUS_SAFETY_ERR		MSS_CR5B_AXI_S_BUS_SAFETY_ERR Register (Offset = 234h) [reset = 0h]
238h	MSS_CR5B_AXI_S_BUS_SAFETY_ERR_STAT_DATA0		MSS_CR5B_AXI_S_BUS_SAFETY_ERR_STAT_DATA0 Register (Offset = 238h) [reset = X]
23Ch	MSS_CR5B_AXI_S_BUS_SAFETY_ERR_STAT_CMD		MSS_CR5B_AXI_S_BUS_SAFETY_ERR_STAT_CMD Register (Offset = 23Ch) [reset = 0h]
240h	MSS_CR5B_AXI_S_BUS_SAFETY_ERR_STAT_WRITE		MSS_CR5B_AXI_S_BUS_SAFETY_ERR_STAT_WRITE Register (Offset = 240h) [reset = 0h]
244h	MSS_CR5B_AXI_S_BUS_SAFETY_ERR_STAT_READ		MSS_CR5B_AXI_S_BUS_SAFETY_ERR_STAT_READ Register (Offset = 244h) [reset = 0h]
248h	MSS_CR5B_AXI_S_BUS_SAFETY_ERR_STAT_WRITERESP		MSS_CR5B_AXI_S_BUS_SAFETY_ERR_STAT_WRITERESP Register (Offset = 248h) [reset = 0h]
24Ch	MSS_TPTC_A0_RD_BUS_SAFETY_CTRL		MSS_TPTC_A0_RD_BUS_SAFETY_CTRL Register (Offset = 24Ch) [reset = X]
250h	MSS_TPTC_A0_RD_BUS_SAFETY_FI		MSS_TPTC_A0_RD_BUS_SAFETY_FI Register (Offset = 250h) [reset = X]
254h	MSS_TPTC_A0_RD_BUS_SAFETY_ERR		MSS_TPTC_A0_RD_BUS_SAFETY_ERR Register (Offset = 254h) [reset = 0h]
258h	MSS_TPTC_A0_RD_BUS_SAFETY_ERR_STAT_DATA0		MSS_TPTC_A0_RD_BUS_SAFETY_ERR_STAT_DATA0 Register (Offset = 258h) [reset = X]

Copyright © 2025 Texas Instruments Incorporated

Table 6-922. MSS_CTRL_MEMORY_MAP Registers (continued)

Offset	Acronym	Register Name	Section
25Ch	MSS_TPTC_A0_RD_BUS_SAFETY_ERR_STAT_CMD		MSS_TPTC_A0_RD_BUS_SAFETY_ERR_STAT_CMD Register (Offset = 25Ch) [reset = 0h]
260h	MSS_TPTC_A0_RD_BUS_SAFETY_ERR_STAT_READ		MSS_TPTC_A0_RD_BUS_SAFETY_ERR_STAT_READ Register (Offset = 260h) [reset = 0h]
264h	MSS_TPTC_A1_RD_BUS_SAFETY_CTRL		MSS_TPTC_A1_RD_BUS_SAFETY_CTRL Register (Offset = 264h) [reset = X]
268h	MSS_TPTC_A1_RD_BUS_SAFETY_FI		MSS_TPTC_A1_RD_BUS_SAFETY_FI Register (Offset = 268h) [reset = X]
26Ch	MSS_TPTC_A1_RD_BUS_SAFETY_ERR		MSS_TPTC_A1_RD_BUS_SAFETY_ERR Register (Offset = 26Ch) [reset = 0h]
270h	MSS_TPTC_A1_RD_BUS_SAFETY_ERR_STAT_DATA0		MSS_TPTC_A1_RD_BUS_SAFETY_ERR_STAT_DATA0 Register (Offset = 270h) [reset = X]
274h	MSS_TPTC_A1_RD_BUS_SAFETY_ERR_STAT_CMD		MSS_TPTC_A1_RD_BUS_SAFETY_ERR_STAT_CMD Register (Offset = 274h) [reset = 0h]
278h	MSS_TPTC_A1_RD_BUS_SAFETY_ERR_STAT_READ		MSS_TPTC_A1_RD_BUS_SAFETY_ERR_STAT_READ Register (Offset = 278h) [reset = 0h]
27Ch	MSS_TPTC_B0_RD_BUS_SAFETY_CTRL		MSS_TPTC_B0_RD_BUS_SAFETY_CTRL Register (Offset = 27Ch) [reset = X]
280h	MSS_TPTC_B0_RD_BUS_SAFETY_FI		MSS_TPTC_B0_RD_BUS_SAFETY_FI Register (Offset = 280h) [reset = X]
284h	MSS_TPTC_B0_RD_BUS_SAFETY_ERR		MSS_TPTC_B0_RD_BUS_SAFETY_ERR Register (Offset = 284h) [reset = 0h]
288h	MSS_TPTC_B0_RD_BUS_SAFETY_ERR_STAT_DATA0		MSS_TPTC_B0_RD_BUS_SAFETY_ERR_STAT_DATA0 Register (Offset = 288h) [reset = X]
28Ch	MSS_TPTC_B0_RD_BUS_SAFETY_ERR_STAT_CMD		MSS_TPTC_B0_RD_BUS_SAFETY_ERR_STAT_CMD Register (Offset = 28Ch) [reset = 0h]

Copyright © 2025 Texas Instruments Incorporated

Table 6-922. MSS_CTRL_MEMORY_MAP Registers (continued)

Offset	Acronym	Register Name	Section
290h	MSS_TPTC_B0_RD_BUS_SAFETY_ERR_STAT_READ		MSS_TPTC_B0_RD_BUS_SAFETY_ERR_STAT_READ Register (Offset = 290h) [reset = 0h]
294h	MSS_TPTC_A0_WR_BUS_SAFETY_CTRL		MSS_TPTC_A0_WR_BUS_SAFETY_CTRL Register (Offset = 294h) [reset = X]
298h	MSS_TPTC_A0_WR_BUS_SAFETY_FI		MSS_TPTC_A0_WR_BUS_SAFETY_FI Register (Offset = 298h) [reset = X]
29Ch	MSS_TPTC_A0_WR_BUS_SAFETY_ERR		MSS_TPTC_A0_WR_BUS_SAFETY_ERR Register (Offset = 29Ch) [reset = 0h]
2A0h	MSS_TPTC_A0_WR_BUS_SAFETY_ERR_STAT_DATA0		MSS_TPTC_A0_WR_BUS_SAFETY_ERR_STAT_DATA0 Register (Offset = 2A0h) [reset = X]
2A4h	MSS_TPTC_A0_WR_BUS_SAFETY_ERR_STAT_CMD		MSS_TPTC_A0_WR_BUS_SAFETY_ERR_STAT_CMD Register (Offset = 2A4h) [reset = 0h]
2A8h	MSS_TPTC_A0_WR_BUS_SAFETY_ERR_STAT_WRITE		MSS_TPTC_A0_WR_BUS_SAFETY_ERR_STAT_WRITE Register (Offset = 2A8h) [reset = 0h]
2ACh	MSS_TPTC_A0_WR_BUS_SAFETY_ERR_STAT_WRITERESP		MSS_TPTC_A0_WR_BUS_SAFETY_ERR_STAT_WRITERESP Register (Offset = 2ACh) [reset = 0h]
2B0h	MSS_TPTC_A1_WR_BUS_SAFETY_CTRL		MSS_TPTC_A1_WR_BUS_SAFETY_CTRL Register (Offset = 2B0h) [reset = X]
2B4h	MSS_TPTC_A1_WR_BUS_SAFETY_FI		MSS_TPTC_A1_WR_BUS_SAFETY_FI Register (Offset = 2B4h) [reset = X]
2B8h	MSS_TPTC_A1_WR_BUS_SAFETY_ERR		MSS_TPTC_A1_WR_BUS_SAFETY_ERR Register (Offset = 2B8h) [reset = 0h]
2BCh	MSS_TPTC_A1_WR_BUS_SAFETY_ERR_STAT_DATA0		MSS_TPTC_A1_WR_BUS_SAFETY_ERR_STAT_DATA0 Register (Offset = 2BCh) [reset = X]
2C0h	MSS_TPTC_A1_WR_BUS_SAFETY_ERR_STAT_CMD		MSS_TPTC_A1_WR_BUS_SAFETY_ERR_STAT_CMD Register (Offset = 2C0h) [reset = 0h]

Copyright © 2025 Texas Instruments Incorporated

Table 6-922. MSS_CTRL_MEMORY_MAP Registers (continued)

Offset	Acronym	Register Name	Section
2C4h	MSS_TPTC_A1_WR_BUS_SAFETY_ERR_STAT_WRITE		MSS_TPTC_A1_WR_BUS_SAFETY_ERR_STAT_WRITE Register (Offset = 2C4h) [reset = 0h]
2C8h	MSS_TPTC_A1_WR_BUS_SAFETY_ERR_STAT_WRITERESP		MSS_TPTC_A1_WR_BUS_SAFETY_ERR_STAT_WRITERESP Register (Offset = 2C8h) [reset = 0h]
2CCh	MSS_TPTC_B0_WR_BUS_SAFETY_CTRL		MSS_TPTC_B0_WR_BUS_SAFETY_CTRL Register (Offset = 2CCh) [reset = X]
2D0h	MSS_TPTC_B0_WR_BUS_SAFETY_FI		MSS_TPTC_B0_WR_BUS_SAFETY_FI Register (Offset = 2D0h) [reset = X]
2D4h	MSS_TPTC_B0_WR_BUS_SAFETY_ERR		MSS_TPTC_B0_WR_BUS_SAFETY_ERR Register (Offset = 2D4h) [reset = 0h]
2D8h	MSS_TPTC_B0_WR_BUS_SAFETY_ERR_STAT_DATA0		MSS_TPTC_B0_WR_BUS_SAFETY_ERR_STAT_DATA0 Register (Offset = 2D8h) [reset = X]
2DCh	MSS_TPTC_B0_WR_BUS_SAFETY_ERR_STAT_CMD		MSS_TPTC_B0_WR_BUS_SAFETY_ERR_STAT_CMD Register (Offset = 2DCh) [reset = 0h]
2E0h	MSS_TPTC_B0_WR_BUS_SAFETY_ERR_STAT_WRITE		MSS_TPTC_B0_WR_BUS_SAFETY_ERR_STAT_WRITE Register (Offset = 2E0h) [reset = 0h]
2E4h	MSS_TPTC_B0_WR_BUS_SAFETY_ERR_STAT_WRITERESP		MSS_TPTC_B0_WR_BUS_SAFETY_ERR_STAT_WRITERESP Register (Offset = 2E4h) [reset = 0h]
2E8h	HSM_TPTC_A0_RD_BUS_SAFETY_CTRL		HSM_TPTC_A0_RD_BUS_SAFETY_CTRL Register (Offset = 2E8h) [reset = X]
2ECh	HSM_TPTC_A0_RD_BUS_SAFETY_FI		HSM_TPTC_A0_RD_BUS_SAFETY_FI Register (Offset = 2ECh) [reset = X]
2F0h	HSM_TPTC_A0_RD_BUS_SAFETY_ERR		HSM_TPTC_A0_RD_BUS_SAFETY_ERR Register (Offset = 2F0h) [reset = 0h]
2F4h	HSM_TPTC_A0_RD_BUS_SAFETY_ERR_STAT_DATA0		HSM_TPTC_A0_RD_BUS_SAFETY_ERR_STAT_DATA0 Register (Offset = 2F4h) [reset = X]

Copyright © 2025 Texas Instruments Incorporated

Table 6-922. MSS_CTRL_MEMORY_MAP Registers (continued)

Offset	Acronym	Register Name	Section
2F8h	HSM_TPTC_A0_RD_BUS_SAFETY_ERR_STAT_CMD		HSM_TPTC_A0_RD_BUS_SAFETY_ERR_STAT_CMD Register (Offset = 2F8h) [reset = 0h]
2FCh	HSM_TPTC_A0_RD_BUS_SAFETY_ERR_STAT_READ		HSM_TPTC_A0_RD_BUS_SAFETY_ERR_STAT_READ Register (Offset = 2FCh) [reset = 0h]
300h	HSM_TPTC_A1_RD_BUS_SAFETY_CTRL		HSM_TPTC_A1_RD_BUS_SAFETY_CTRL Register (Offset = 300h) [reset = X]
304h	HSM_TPTC_A1_RD_BUS_SAFETY_FI		HSM_TPTC_A1_RD_BUS_SAFETY_FI Register (Offset = 304h) [reset = X]
308h	HSM_TPTC_A1_RD_BUS_SAFETY_ERR		HSM_TPTC_A1_RD_BUS_SAFETY_ERR Register (Offset = 308h) [reset = 0h]
30Ch	HSM_TPTC_A1_RD_BUS_SAFETY_ERR_STAT_DATA0		HSM_TPTC_A1_RD_BUS_SAFETY_ERR_STAT_DATA0 Register (Offset = 30Ch) [reset = X]
310h	HSM_TPTC_A1_RD_BUS_SAFETY_ERR_STAT_CMD		HSM_TPTC_A1_RD_BUS_SAFETY_ERR_STAT_CMD Register (Offset = 310h) [reset = 0h]
314h	HSM_TPTC_A1_RD_BUS_SAFETY_ERR_STAT_READ		HSM_TPTC_A1_RD_BUS_SAFETY_ERR_STAT_READ Register (Offset = 314h) [reset = 0h]
318h	HSM_TPTC_A0_WR_BUS_SAFETY_CTRL		HSM_TPTC_A0_WR_BUS_SAFETY_CTRL Register (Offset = 318h) [reset = X]
31Ch	HSM_TPTC_A0_WR_BUS_SAFETY_FI		HSM_TPTC_A0_WR_BUS_SAFETY_FI Register (Offset = 31Ch) [reset = X]
320h	HSM_TPTC_A0_WR_BUS_SAFETY_ERR		HSM_TPTC_A0_WR_BUS_SAFETY_ERR Register (Offset = 320h) [reset = 0h]
324h	HSM_TPTC_A0_WR_BUS_SAFETY_ERR_STAT_DATA0		HSM_TPTC_A0_WR_BUS_SAFETY_ERR_STAT_DATA0 Register (Offset = 324h) [reset = X]
328h	HSM_TPTC_A0_WR_BUS_SAFETY_ERR_STAT_CMD		HSM_TPTC_A0_WR_BUS_SAFETY_ERR_STAT_CMD Register (Offset = 328h) [reset = 0h]

Copyright © 2025 Texas Instruments Incorporated

Table 6-922. MSS_CTRL_MEMORY_MAP Registers (continued)

Offset	Acronym	Register Name	Section
32Ch	HSM_TPTC_A0_WR_BUS_SAFETY_ERR_STAT_WRITE		HSM_TPTC_A0_WR_BUS_SAFETY_ERR_STAT_WRITE Register (Offset = 32Ch) [reset = 0h]
330h	HSM_TPTC_A0_WR_BUS_SAFETY_ERR_STAT_WRITERESP		HSM_TPTC_A0_WR_BUS_SAFETY_ERR_STAT_WRITERESP Register (Offset = 330h) [reset = 0h]
334h	HSM_TPTC_A1_WR_BUS_SAFETY_CTRL		HSM_TPTC_A1_WR_BUS_SAFETY_CTRL Register (Offset = 334h) [reset = X]
338h	HSM_TPTC_A1_WR_BUS_SAFETY_FI		HSM_TPTC_A1_WR_BUS_SAFETY_FI Register (Offset = 338h) [reset = X]
33Ch	HSM_TPTC_A1_WR_BUS_SAFETY_ERR		HSM_TPTC_A1_WR_BUS_SAFETY_ERR Register (Offset = 33Ch) [reset = 0h]
340h	HSM_TPTC_A1_WR_BUS_SAFETY_ERR_STAT_DATA0		HSM_TPTC_A1_WR_BUS_SAFETY_ERR_STAT_DATA0 Register (Offset = 340h) [reset = X]
344h	HSM_TPTC_A1_WR_BUS_SAFETY_ERR_STAT_CMD		HSM_TPTC_A1_WR_BUS_SAFETY_ERR_STAT_CMD Register (Offset = 344h) [reset = 0h]
348h	HSM_TPTC_A1_WR_BUS_SAFETY_ERR_STAT_WRITE		HSM_TPTC_A1_WR_BUS_SAFETY_ERR_STAT_WRITE Register (Offset = 348h) [reset = 0h]
34Ch	HSM_TPTC_A1_WR_BUS_SAFETY_ERR_STAT_WRITERESP		HSM_TPTC_A1_WR_BUS_SAFETY_ERR_STAT_WRITERESP Register (Offset = 34Ch) [reset = 0h]
350h	MSS_QSPI_BUS_SAFETY_CTRL		MSS_QSPI_BUS_SAFETY_CTRL Register (Offset = 350h) [reset = X]
354h	MSS_QSPI_BUS_SAFETY_FI		MSS_QSPI_BUS_SAFETY_FI Register (Offset = 354h) [reset = X]
358h	MSS_QSPI_BUS_SAFETY_ERR		MSS_QSPI_BUS_SAFETY_ERR Register (Offset = 358h) [reset = 0h]
35Ch	MSS_QSPI_BUS_SAFETY_ERR_STAT_DATA0		MSS_QSPI_BUS_SAFETY_ERR_STAT_DATA0 Register (Offset = 35Ch) [reset = X]

Copyright © 2025 Texas Instruments Incorporated

Table 6-922. MSS_CTRL_MEMORY_MAP Registers (continued)

Offset	Acronym	Register Name	Section
360h	MSS_QSPI_BUS_SAFETY_ERR_STAT_CMD		MSS_QSPI_BUS_SAFETY_ERR_STAT_CMD Register (Offset = 360h) [reset = 0h]
364h	MSS_QSPI_BUS_SAFETY_ERR_STAT_WRITE		MSS_QSPI_BUS_SAFETY_ERR_STAT_WRITE Register (Offset = 364h) [reset = 0h]
368h	MSS_QSPI_BUS_SAFETY_ERR_STAT_READ		MSS_QSPI_BUS_SAFETY_ERR_STAT_READ Register (Offset = 368h) [reset = 0h]
36Ch	MSS_QSPI_BUS_SAFETY_ERR_STAT_WRITERESP		MSS_QSPI_BUS_SAFETY_ERR_STAT_WRITERESP Register (Offset = 36Ch) [reset = 0h]
370h	HSM_DTHE_BUS_SAFETY_CTRL		HSM_DTHE_BUS_SAFETY_CTRL Register (Offset = 370h) [reset = X]
374h	HSM_DTHE_BUS_SAFETY_FI		HSM_DTHE_BUS_SAFETY_FI Register (Offset = 374h) [reset = X]
378h	HSM_DTHE_BUS_SAFETY_ERR		HSM_DTHE_BUS_SAFETY_ERR Register (Offset = 378h) [reset = 0h]
37Ch	HSM_DTHE_BUS_SAFETY_ERR_STAT_DATA0		HSM_DTHE_BUS_SAFETY_ERR_STAT_DATA0 Register (Offset = 37Ch) [reset = X]
380h	HSM_DTHE_BUS_SAFETY_ERR_STAT_CMD		HSM_DTHE_BUS_SAFETY_ERR_STAT_CMD Register (Offset = 380h) [reset = 0h]
384h	HSM_DTHE_BUS_SAFETY_ERR_STAT_WRITE		HSM_DTHE_BUS_SAFETY_ERR_STAT_WRITE Register (Offset = 384h) [reset = 0h]
388h	HSM_DTHE_BUS_SAFETY_ERR_STAT_READ		HSM_DTHE_BUS_SAFETY_ERR_STAT_READ Register (Offset = 388h) [reset = 0h]
38Ch	HSM_DTHE_BUS_SAFETY_ERR_STAT_WRITERESP		HSM_DTHE_BUS_SAFETY_ERR_STAT_WRITERESP Register (Offset = 38Ch) [reset = 0h]

Copyright © 2025 Texas Instruments Incorporated

Table 6-922. MSS_CTRL_MEMORY_MAP Registers (continued)

Offset	Acronym	Register Name	Section
390h	MSS_CPSW_BUS_SAFETY_CTRL		MSS_CPSW_BUS_SAFETY_CTRL Register (Offset = 390h) [reset = X]
394h	MSS_CPSW_BUS_SAFETY_FI		MSS_CPSW_BUS_SAFETY_FI Register (Offset = 394h) [reset = X]
398h	MSS_CPSW_BUS_SAFETY_ERR		MSS_CPSW_BUS_SAFETY_ERR Register (Offset = 398h) [reset = 0h]
39Ch	MSS_CPSW_BUS_SAFETY_ERR_STAT_DATA0		MSS_CPSW_BUS_SAFETY_ERR_STAT_DATA0 Register (Offset = 39Ch) [reset = X]
3A0h	MSS_CPSW_BUS_SAFETY_ERR_STAT_CMD		MSS_CPSW_BUS_SAFETY_ERR_STAT_CMD Register (Offset = 3A0h) [reset = 0h]
3A4h	MSS_CPSW_BUS_SAFETY_ERR_STAT_WRITE		MSS_CPSW_BUS_SAFETY_ERR_STAT_WRITE Register (Offset = 3A4h) [reset = 0h]
3A8h	MSS_CPSW_BUS_SAFETY_ERR_STAT_READ		MSS_CPSW_BUS_SAFETY_ERR_STAT_READ Register (Offset = 3A8h) [reset = 0h]
3ACh	MSS_CPSW_BUS_SAFETY_ERR_STAT_WRITERESP		MSS_CPSW_BUS_SAFETY_ERR_STAT_WRITERESP Register (Offset = 3ACh) [reset = 0h]
3B0h	MSS_MCRC_BUS_SAFETY_CTRL		MSS_MCRC_BUS_SAFETY_CTRL Register (Offset = 3B0h) [reset = X]
3B4h	MSS_MCRC_BUS_SAFETY_FI		MSS_MCRC_BUS_SAFETY_FI Register (Offset = 3B4h) [reset = X]
3B8h	MSS_MCRC_BUS_SAFETY_ERR		MSS_MCRC_BUS_SAFETY_ERR Register (Offset = 3B8h) [reset = 0h]
3BCh	MSS_MCRC_BUS_SAFETY_ERR_STAT_DATA0		MSS_MCRC_BUS_SAFETY_ERR_STAT_DATA0 Register (Offset = 3BCh) [reset = X]
3C0h	MSS_MCRC_BUS_SAFETY_ERR_STAT_CMD		MSS_MCRC_BUS_SAFETY_ERR_STAT_CMD Register (Offset = 3C0h) [reset = 0h]

Copyright © 2025 Texas Instruments Incorporated

Table 6-922. MSS_CTRL_MEMORY_MAP Registers (continued)

Offset	Acronym	Register Name	Section
3C4h	MSS_MCRC_BUS_SAFETY_ERR_STAT_WRITE		MSS_MCRC_BUS_SAFETY_ERR_STAT_WRITE Register (Offset = 3C4h) [reset = 0h]
3C8h	MSS_MCRC_BUS_SAFETY_ERR_STAT_READ		MSS_MCRC_BUS_SAFETY_ERR_STAT_READ Register (Offset = 3C8h) [reset = 0h]
3CCh	MSS_MCRC_BUS_SAFETY_ERR_STAT_WRITERESP		MSS_MCRC_BUS_SAFETY_ERR_STAT_WRITERESP Register (Offset = 3CCh) [reset = 0h]
3D0h	MSS_PCR_BUS_SAFETY_CTRL		MSS_PCR_BUS_SAFETY_CTRL Register (Offset = 3D0h) [reset = X]
3D4h	MSS_PCR_BUS_SAFETY_FI		MSS_PCR_BUS_SAFETY_FI Register (Offset = 3D4h) [reset = X]
3D8h	MSS_PCR_BUS_SAFETY_ERR		MSS_PCR_BUS_SAFETY_ERR Register (Offset = 3D8h) [reset = 0h]
3DCh	MSS_PCR_BUS_SAFETY_ERR_STAT_DATA0		MSS_PCR_BUS_SAFETY_ERR_STAT_DATA0 Register (Offset = 3DCh) [reset = X]
3E0h	MSS_PCR_BUS_SAFETY_ERR_STAT_CMD		MSS_PCR_BUS_SAFETY_ERR_STAT_CMD Register (Offset = 3E0h) [reset = 0h]
3E4h	MSS_PCR_BUS_SAFETY_ERR_STAT_WRITE		MSS_PCR_BUS_SAFETY_ERR_STAT_WRITE Register (Offset = 3E4h) [reset = 0h]
3E8h	MSS_PCR_BUS_SAFETY_ERR_STAT_READ		MSS_PCR_BUS_SAFETY_ERR_STAT_READ Register (Offset = 3E8h) [reset = 0h]
3ECh	MSS_PCR_BUS_SAFETY_ERR_STAT_WRITERESP		MSS_PCR_BUS_SAFETY_ERR_STAT_WRITERESP Register (Offset = 3ECh) [reset = 0h]
3F0h	MSS_PCR2_BUS_SAFETY_CTRL		MSS_PCR2_BUS_SAFETY_CTRL Register (Offset = 3F0h) [reset = X]
3F4h	MSS_PCR2_BUS_SAFETY_FI		MSS_PCR2_BUS_SAFETY_FI Register (Offset = 3F4h) [reset = X]

Copyright © 2025 Texas Instruments Incorporated

Table 6-922. MSS_CTRL_MEMORY_MAP Registers (continued)

Offset	Acronym	Register Name	Section
3F8h	MSS_PCR2_BUS_SAFETY_ERR		MSS_PCR2_BUS_SAFETY_ERR Register (Offset = 3F8h) [reset = 0h]
3FCh	MSS_PCR2_BUS_SAFETY_ERR_STAT_DATA0		MSS_PCR2_BUS_SAFETY_ERR_STAT_DATA0 Register (Offset = 3FCh) [reset = X]
400h	MSS_PCR2_BUS_SAFETY_ERR_STAT_CMD		MSS_PCR2_BUS_SAFETY_ERR_STAT_CMD Register (Offset = 400h) [reset = 0h]
404h	MSS_PCR2_BUS_SAFETY_ERR_STAT_WRITE		MSS_PCR2_BUS_SAFETY_ERR_STAT_WRITE Register (Offset = 404h) [reset = 0h]
408h	MSS_PCR2_BUS_SAFETY_ERR_STAT_READ		MSS_PCR2_BUS_SAFETY_ERR_STAT_READ Register (Offset = 408h) [reset = 0h]
40Ch	MSS_PCR2_BUS_SAFETY_ERR_STAT_WRITERESP		MSS_PCR2_BUS_SAFETY_ERR_STAT_WRITERESP Register (Offset = 40Ch) [reset = 0h]
410h	HSM_M_BUS_SAFETY_CTRL		HSM_M_BUS_SAFETY_CTRL Register (Offset = 410h) [reset = X]
414h	HSM_M_BUS_SAFETY_FI		HSM_M_BUS_SAFETY_FI Register (Offset = 414h) [reset = X]
418h	HSM_M_BUS_SAFETY_ERR		HSM_M_BUS_SAFETY_ERR Register (Offset = 418h) [reset = 0h]
41Ch	HSM_M_BUS_SAFETY_ERR_STAT_DATA0		HSM_M_BUS_SAFETY_ERR_STAT_DATA0 Register (Offset = 41Ch) [reset = X]
420h	HSM_M_BUS_SAFETY_ERR_STAT_CMD		HSM_M_BUS_SAFETY_ERR_STAT_CMD Register (Offset = 420h) [reset = 0h]
424h	HSM_M_BUS_SAFETY_ERR_STAT_WRITE		HSM_M_BUS_SAFETY_ERR_STAT_WRITE Register (Offset = 424h) [reset = 0h]
428h	HSM_M_BUS_SAFETY_ERR_STAT_READ		HSM_M_BUS_SAFETY_ERR_STAT_READ Register (Offset = 428h) [reset = 0h]

Copyright © 2025 Texas Instruments Incorporated

Table 6-922. MSS_CTRL_MEMORY_MAP Registers (continued)

Offset	Acronym	Register Name	Section
42Ch	HSM_M_BUS_SAFETY_ERR_STAT_WRITERESP		HSM_M_BUS_SAFETY_ERR_STAT_WRITERESP Register (Offset = 42Ch) [reset = 0h]
430h	HSM_S_BUS_SAFETY_CTRL		HSM_S_BUS_SAFETY_CTRL Register (Offset = 430h) [reset = X]
434h	HSM_S_BUS_SAFETY_FI		HSM_S_BUS_SAFETY_FI Register (Offset = 434h) [reset = X]
438h	HSM_S_BUS_SAFETY_ERR		HSM_S_BUS_SAFETY_ERR Register (Offset = 438h) [reset = 0h]
43Ch	HSM_S_BUS_SAFETY_ERR_STAT_DATA0		HSM_S_BUS_SAFETY_ERR_STAT_DATA0 Register (Offset = 43Ch) [reset = X]
440h	HSM_S_BUS_SAFETY_ERR_STAT_CMD		HSM_S_BUS_SAFETY_ERR_STAT_CMD Register (Offset = 440h) [reset = 0h]
444h	HSM_S_BUS_SAFETY_ERR_STAT_WRITE		HSM_S_BUS_SAFETY_ERR_STAT_WRITE Register (Offset = 444h) [reset = 0h]
448h	HSM_S_BUS_SAFETY_ERR_STAT_READ		HSM_S_BUS_SAFETY_ERR_STAT_READ Register (Offset = 448h) [reset = 0h]
44Ch	HSM_S_BUS_SAFETY_ERR_STAT_WRITERESP		HSM_S_BUS_SAFETY_ERR_STAT_WRITERESP Register (Offset = 44Ch) [reset = 0h]
450h	DAP_R232_BUS_SAFETY_CTRL		DAP_R232_BUS_SAFETY_CTRL Register (Offset = 450h) [reset = X]
454h	DAP_R232_BUS_SAFETY_FI		DAP_R232_BUS_SAFETY_FI Register (Offset = 454h) [reset = X]
458h	DAP_R232_BUS_SAFETY_ERR		DAP_R232_BUS_SAFETY_ERR Register (Offset = 458h) [reset = 0h]
45Ch	DAP_R232_BUS_SAFETY_ERR_STAT_DATA0		DAP_R232_BUS_SAFETY_ERR_STAT_DATA0 Register (Offset = 45Ch) [reset = X]

Copyright © 2025 Texas Instruments Incorporated

Table 6-922. MSS_CTRL_MEMORY_MAP Registers (continued)

Offset	Acronym	Register Name	Section
460h	DAP_R232_BUS_SAFETY_ERR_STAT_CMD		DAP_R232_BUS_SAFETY_ERR_STAT_CMD Register (Offset = 460h) [reset = 0h]
464h	DAP_R232_BUS_SAFETY_ERR_STAT_WRITE		DAP_R232_BUS_SAFETY_ERR_STAT_WRITE Register (Offset = 464h) [reset = 0h]
468h	DAP_R232_BUS_SAFETY_ERR_STAT_READ		DAP_R232_BUS_SAFETY_ERR_STAT_READ Register (Offset = 468h) [reset = 0h]
46Ch	DAP_R232_BUS_SAFETY_ERR_STAT_WRITERESP		DAP_R232_BUS_SAFETY_ERR_STAT_WRITERESP Register (Offset = 46Ch) [reset = 0h]
470h	MSS_L2_A_BUS_SAFETY_CTRL		MSS_L2_A_BUS_SAFETY_CTRL Register (Offset = 470h) [reset = X]
474h	MSS_L2_A_BUS_SAFETY_FI		MSS_L2_A_BUS_SAFETY_FI Register (Offset = 474h) [reset = X]
478h	MSS_L2_A_BUS_SAFETY_ERR		MSS_L2_A_BUS_SAFETY_ERR Register (Offset = 478h) [reset = 0h]
47Ch	MSS_L2_A_BUS_SAFETY_ERR_STAT_DATA0		MSS_L2_A_BUS_SAFETY_ERR_STAT_DATA0 Register (Offset = 47Ch) [reset = X]
480h	MSS_L2_A_BUS_SAFETY_ERR_STAT_CMD		MSS_L2_A_BUS_SAFETY_ERR_STAT_CMD Register (Offset = 480h) [reset = 0h]
484h	MSS_L2_A_BUS_SAFETY_ERR_STAT_WRITE		MSS_L2_A_BUS_SAFETY_ERR_STAT_WRITE Register (Offset = 484h) [reset = 0h]
488h	MSS_L2_A_BUS_SAFETY_ERR_STAT_READ		MSS_L2_A_BUS_SAFETY_ERR_STAT_READ Register (Offset = 488h) [reset = 0h]
48Ch	MSS_L2_A_BUS_SAFETY_ERR_STAT_WRITERESP		MSS_L2_A_BUS_SAFETY_ERR_STAT_WRITERESP Register (Offset = 48Ch) [reset = 0h]

Copyright © 2025 Texas Instruments Incorporated

Table 6-922. MSS_CTRL_MEMORY_MAP Registers (continued)

Offset	Acronym	Register Name	Section
490h	MSS_L2_B_BUS_SAFETY_CTRL		MSS_L2_B_BUS_SAFETY_CTRL Register (Offset = 490h) [reset = X]
494h	MSS_L2_B_BUS_SAFETY_FI		MSS_L2_B_BUS_SAFETY_FI Register (Offset = 494h) [reset = X]
498h	MSS_L2_B_BUS_SAFETY_ERR		MSS_L2_B_BUS_SAFETY_ERR Register (Offset = 498h) [reset = 0h]
49Ch	MSS_L2_B_BUS_SAFETY_ERR_STAT_DATA0		MSS_L2_B_BUS_SAFETY_ERR_STAT_DATA0 Register (Offset = 49Ch) [reset = X]
4A0h	MSS_L2_B_BUS_SAFETY_ERR_STAT_CMD		MSS_L2_B_BUS_SAFETY_ERR_STAT_CMD Register (Offset = 4A0h) [reset = 0h]
4A4h	MSS_L2_B_BUS_SAFETY_ERR_STAT_WRITE		MSS_L2_B_BUS_SAFETY_ERR_STAT_WRITE Register (Offset = 4A4h) [reset = 0h]
4A8h	MSS_L2_B_BUS_SAFETY_ERR_STAT_READ		MSS_L2_B_BUS_SAFETY_ERR_STAT_READ Register (Offset = 4A8h) [reset = 0h]
4ACh	MSS_L2_B_BUS_SAFETY_ERR_STAT_WRITERESP		MSS_L2_B_BUS_SAFETY_ERR_STAT_WRITERESP Register (Offset = 4ACh) [reset = 0h]
4B0h	MSS_MBOX_BUS_SAFETY_CTRL		MSS_MBOX_BUS_SAFETY_CTRL Register (Offset = 4B0h) [reset = X]
4B4h	MSS_MBOX_BUS_SAFETY_FI		MSS_MBOX_BUS_SAFETY_FI Register (Offset = 4B4h) [reset = X]
4B8h	MSS_MBOX_BUS_SAFETY_ERR		MSS_MBOX_BUS_SAFETY_ERR Register (Offset = 4B8h) [reset = 0h]
4BCh	MSS_MBOX_BUS_SAFETY_ERR_STAT_DATA0		MSS_MBOX_BUS_SAFETY_ERR_STAT_DATA0 Register (Offset = 4BCh) [reset = X]
4C0h	MSS_MBOX_BUS_SAFETY_ERR_STAT_CMD		MSS_MBOX_BUS_SAFETY_ERR_STAT_CMD Register (Offset = 4C0h) [reset = 0h]

Copyright © 2025 Texas Instruments Incorporated

Table 6-922. MSS_CTRL_MEMORY_MAP Registers (continued)

Offset	Acronym	Register Name	Section
4C4h	MSS_MBOX_BUS_SAFETY_ERR_STAT_WRITE		MSS_MBOX_BUS_SAFETY_ERR_STAT_WRITE Register (Offset = 4C4h) [reset = 0h]
4C8h	MSS_MBOX_BUS_SAFETY_ERR_STAT_READ		MSS_MBOX_BUS_SAFETY_ERR_STAT_READ Register (Offset = 4C8h) [reset = 0h]
4CCh	MSS_MBOX_BUS_SAFETY_ERR_STAT_WRITERESP		MSS_MBOX_BUS_SAFETY_ERR_STAT_WRITERESP Register (Offset = 4CCh) [reset = 0h]
4D0h	MSS_SWBUF_BUS_SAFETY_CTRL		MSS_SWBUF_BUS_SAFETY_CTRL Register (Offset = 4D0h) [reset = X]
4D4h	MSS_SWBUF_BUS_SAFETY_FI		MSS_SWBUF_BUS_SAFETY_FI Register (Offset = 4D4h) [reset = X]
4D8h	MSS_SWBUF_BUS_SAFETY_ERR		MSS_SWBUF_BUS_SAFETY_ERR Register (Offset = 4D8h) [reset = 0h]
4DCh	MSS_SWBUF_BUS_SAFETY_ERR_STAT_DATA0		MSS_SWBUF_BUS_SAFETY_ERR_STAT_DATA0 Register (Offset = 4DCh) [reset = X]
4E0h	MSS_SWBUF_BUS_SAFETY_ERR_STAT_CMD		MSS_SWBUF_BUS_SAFETY_ERR_STAT_CMD Register (Offset = 4E0h) [reset = 0h]
4E4h	MSS_SWBUF_BUS_SAFETY_ERR_STAT_WRITE		MSS_SWBUF_BUS_SAFETY_ERR_STAT_WRITE Register (Offset = 4E4h) [reset = 0h]
4E8h	MSS_SWBUF_BUS_SAFETY_ERR_STAT_READ		MSS_SWBUF_BUS_SAFETY_ERR_STAT_READ Register (Offset = 4E8h) [reset = 0h]
4ECh	MSS_SWBUF_BUS_SAFETY_ERR_STAT_WRITERESP		MSS_SWBUF_BUS_SAFETY_ERR_STAT_WRITERESP Register (Offset = 4ECh) [reset = 0h]
4F0h	MSS_GPADC_BUS_SAFETY_CTRL		MSS_GPADC_BUS_SAFETY_CTRL Register (Offset = 4F0h) [reset = X]
4F4h	MSS_GPADC_BUS_SAFETY_FI		MSS_GPADC_BUS_SAFETY_FI Register (Offset = 4F4h) [reset = X]

Copyright © 2025 Texas Instruments Incorporated

Table 6-922. MSS_CTRL_MEMORY_MAP Registers (continued)

Offset	Acronym	Register Name	Section
4F8h	MSS_GPADC_BUS_SAFETY_ERR		MSS_GPADC_BUS_SAFETY_ERR Register (Offset = 4F8h) [reset = 0h]
4FCh	MSS_GPADC_BUS_SAFETY_ERR_STAT_DATA0		MSS_GPADC_BUS_SAFETY_ERR_STAT_DATA0 Register (Offset = 4FCh) [reset = X]
500h	MSS_GPADC_BUS_SAFETY_ERR_STAT_CMD		MSS_GPADC_BUS_SAFETY_ERR_STAT_CMD Register (Offset = 500h) [reset = 0h]
504h	MSS_GPADC_BUS_SAFETY_ERR_STAT_WRITE		MSS_GPADC_BUS_SAFETY_ERR_STAT_WRITE Register (Offset = 504h) [reset = 0h]
508h	MSS_GPADC_BUS_SAFETY_ERR_STAT_READ		MSS_GPADC_BUS_SAFETY_ERR_STAT_READ Register (Offset = 508h) [reset = 0h]
50Ch	MSS_GPADC_BUS_SAFETY_ERR_STAT_WRITERESP		MSS_GPADC_BUS_SAFETY_ERR_STAT_WRITERESP Register (Offset = 50Ch) [reset = 0h]
510h	MSS_BUS_SAFETY_SEC_ERR_STAT0		MSS_BUS_SAFETY_SEC_ERR_STAT0 Register (Offset = 510h) [reset = 0h]
514h	MSS_BUS_SAFETY_SEC_ERR_STAT1		MSS_BUS_SAFETY_SEC_ERR_STAT1 Register (Offset = 514h) [reset = X]
538h	MSS_DMM_BUS_SAFETY_CTRL		MSS_DMM_BUS_SAFETY_CTRL Register (Offset = 538h) [reset = X]
53Ch	MSS_DMM_BUS_SAFETY_FI		MSS_DMM_BUS_SAFETY_FI Register (Offset = 53Ch) [reset = X]
540h	MSS_DMM_BUS_SAFETY_ERR		MSS_DMM_BUS_SAFETY_ERR Register (Offset = 540h) [reset = 0h]
544h	MSS_DMM_BUS_SAFETY_ERR_STAT_DATA0		MSS_DMM_BUS_SAFETY_ERR_STAT_DATA0 Register (Offset = 544h) [reset = X]
548h	MSS_DMM_BUS_SAFETY_ERR_STAT_CMD		MSS_DMM_BUS_SAFETY_ERR_STAT_CMD Register (Offset = 548h) [reset = 0h]

Copyright © 2025 Texas Instruments Incorporated

Table 6-922. MSS_CTRL_MEMORY_MAP Registers (continued)

Offset	Acronym	Register Name	Section
54Ch	MSS_DMM_BUS_SAFETY_ERR_STAT_WRITE		MSS_DMM_BUS_SAFETY_ERR_STAT_WRITE Register (Offset = 54Ch) [reset = 0h]
550h	MSS_DMM_BUS_SAFETY_ERR_STAT_READ		MSS_DMM_BUS_SAFETY_ERR_STAT_READ Register (Offset = 550h) [reset = 0h]
554h	MSS_DMM_BUS_SAFETY_ERR_STAT_WRITERESP		MSS_DMM_BUS_SAFETY_ERR_STAT_WRITERESP Register (Offset = 554h) [reset = 0h]
558h	MSS_DMM_SLV_BUS_SAFETY_CTRL		MSS_DMM_SLV_BUS_SAFETY_CTRL Register (Offset = 558h) [reset = X]
55Ch	MSS_DMM_SLV_BUS_SAFETY_FI		MSS_DMM_SLV_BUS_SAFETY_FI Register (Offset = 55Ch) [reset = X]
560h	MSS_DMM_SLV_BUS_SAFETY_ERR		MSS_DMM_SLV_BUS_SAFETY_ERR Register (Offset = 560h) [reset = 0h]
564h	MSS_DMM_SLV_BUS_SAFETY_ERR_STAT_DATA0		MSS_DMM_SLV_BUS_SAFETY_ERR_STAT_DATA0 Register (Offset = 564h) [reset = X]
568h	MSS_DMM_SLV_BUS_SAFETY_ERR_STAT_CMD		MSS_DMM_SLV_BUS_SAFETY_ERR_STAT_CMD Register (Offset = 568h) [reset = 0h]
56Ch	MSS_DMM_SLV_BUS_SAFETY_ERR_STAT_WRITE		MSS_DMM_SLV_BUS_SAFETY_ERR_STAT_WRITE Register (Offset = 56Ch) [reset = 0h]
570h	MSS_DMM_SLV_BUS_SAFETY_ERR_STAT_READ		MSS_DMM_SLV_BUS_SAFETY_ERR_STAT_READ Register (Offset = 570h) [reset = 0h]
574h	MSS_DMM_SLV_BUS_SAFETY_ERR_STAT_WRITERESP		MSS_DMM_SLV_BUS_SAFETY_ERR_STAT_WRITERESP Register (Offset = 574h) [reset = 0h]
578h	MSS_TO_MDO_BUS_SAFETY_CTRL		MSS_TO_MDO_BUS_SAFETY_CTRL Register (Offset = 578h) [reset = X]
57Ch	MSS_TO_MDO_BUS_SAFETY_FI		MSS_TO_MDO_BUS_SAFETY_FI Register (Offset = 57Ch) [reset = X]

Copyright © 2025 Texas Instruments Incorporated

Table 6-922. MSS_CTRL_MEMORY_MAP Registers (continued)

Offset	Acronym	Register Name	Section
580h	MSS_TO_MDO_BUS_SAFETY_ERR		MSS_TO_MDO_BUS_SAFETY_ERR Register (Offset = 580h) [reset = 0h]
584h	MSS_TO_MDO_BUS_SAFETY_ERR_STAT_DATA0		MSS_TO_MDO_BUS_SAFETY_ERR_STAT_DATA0 Register (Offset = 584h) [reset = X]
588h	MSS_TO_MDO_BUS_SAFETY_ERR_STAT_CMD		MSS_TO_MDO_BUS_SAFETY_ERR_STAT_CMD Register (Offset = 588h) [reset = 0h]
58Ch	MSS_TO_MDO_BUS_SAFETY_ERR_STAT_WRITE		MSS_TO_MDO_BUS_SAFETY_ERR_STAT_WRITE Register (Offset = 58Ch) [reset = 0h]
590h	MSS_TO_MDO_BUS_SAFETY_ERR_STAT_READ		MSS_TO_MDO_BUS_SAFETY_ERR_STAT_READ Register (Offset = 590h) [reset = 0h]
594h	MSS_TO_MDO_BUS_SAFETY_ERR_STAT_WRITERESP		MSS_TO_MDO_BUS_SAFETY_ERR_STAT_WRITERESP Register (Offset = 594h) [reset = 0h]
598h	MSS_SCRP_BUS_SAFETY_CTRL		MSS_SCRP_BUS_SAFETY_CTRL Register (Offset = 598h) [reset = X]
59Ch	MSS_SCRP_BUS_SAFETY_FI		MSS_SCRP_BUS_SAFETY_FI Register (Offset = 59Ch) [reset = X]
5A0h	MSS_SCRP_BUS_SAFETY_ERR		MSS_SCRP_BUS_SAFETY_ERR Register (Offset = 5A0h) [reset = 0h]
5A4h	MSS_SCRP_BUS_SAFETY_ERR_STAT_DATA0		MSS_SCRP_BUS_SAFETY_ERR_STAT_DATA0 Register (Offset = 5A4h) [reset = X]
5A8h	MSS_SCRP_BUS_SAFETY_ERR_STAT_CMD		MSS_SCRP_BUS_SAFETY_ERR_STAT_CMD Register (Offset = 5A8h) [reset = 0h]
5ACh	MSS_SCRP_BUS_SAFETY_ERR_STAT_WRITE		MSS_SCRP_BUS_SAFETY_ERR_STAT_WRITE Register (Offset = 5ACh) [reset = 0h]

Copyright © 2025 Texas Instruments Incorporated

Table 6-922. MSS_CTRL_MEMORY_MAP Registers (continued)

Offset	Acronym	Register Name	Section
5B0h	MSS_SCRP_BUS_SAFETY_ERR_STAT_READ		MSS_SCRP_BUS_SAFETY_ERR_STAT_READ Register (Offset = 5B0h) [reset = 0h]
5B4h	MSS_SCRP_BUS_SAFETY_ERR_STAT_WRITERESP		MSS_SCRP_BUS_SAFETY_ERR_STAT_WRITERESP Register (Offset = 5B4h) [reset = 0h]
5B8h	MSS_CR5A_AHB_BUS_SAFETY_CTRL		MSS_CR5A_AHB_BUS_SAFETY_CTRL Register (Offset = 5B8h) [reset = X]
5BCh	MSS_CR5A_AHB_BUS_SAFETY_FI		MSS_CR5A_AHB_BUS_SAFETY_FI Register (Offset = 5BCh) [reset = X]
5C0h	MSS_CR5A_AHB_BUS_SAFETY_ERR		MSS_CR5A_AHB_BUS_SAFETY_ERR Register (Offset = 5C0h) [reset = 0h]
5C4h	MSS_CR5A_AHB_BUS_SAFETY_ERR_STAT_DATA0		MSS_CR5A_AHB_BUS_SAFETY_ERR_STAT_DATA0 Register (Offset = 5C4h) [reset = X]
5C8h	MSS_CR5A_AHB_BUS_SAFETY_ERR_STAT_CMD		MSS_CR5A_AHB_BUS_SAFETY_ERR_STAT_CMD Register (Offset = 5C8h) [reset = 0h]
5CCh	MSS_CR5A_AHB_BUS_SAFETY_ERR_STAT_WRITE		MSS_CR5A_AHB_BUS_SAFETY_ERR_STAT_WRITE Register (Offset = 5CCh) [reset = 0h]
5D0h	MSS_CR5A_AHB_BUS_SAFETY_ERR_STAT_READ		MSS_CR5A_AHB_BUS_SAFETY_ERR_STAT_READ Register (Offset = 5D0h) [reset = 0h]
5D4h	MSS_CR5A_AHB_BUS_SAFETY_ERR_STAT_WRITERESP		MSS_CR5A_AHB_BUS_SAFETY_ERR_STAT_WRITERESP Register (Offset = 5D4h) [reset = 0h]
5D8h	MSS_CR5B_AHB_BUS_SAFETY_CTRL		MSS_CR5B_AHB_BUS_SAFETY_CTRL Register (Offset = 5D8h) [reset = X]
5DCh	MSS_CR5B_AHB_BUS_SAFETY_FI		MSS_CR5B_AHB_BUS_SAFETY_FI Register (Offset = 5DCh) [reset = X]
5E0h	MSS_CR5B_AHB_BUS_SAFETY_ERR		MSS_CR5B_AHB_BUS_SAFETY_ERR Register (Offset = 5E0h) [reset = 0h]

Copyright © 2025 Texas Instruments Incorporated

Table 6-922. MSS_CTRL_MEMORY_MAP Registers (continued)

Offset	Acronym	Register Name	Section
5E4h	MSS_CR5B_AHB_BUS_SAFETY_ERR_STAT_DATA0		MSS_CR5B_AHB_BUS_SAFETY_ERR_STAT_DATA0 Register (Offset = 5E4h) [reset = X]
5E8h	MSS_CR5B_AHB_BUS_SAFETY_ERR_STAT_CMD		MSS_CR5B_AHB_BUS_SAFETY_ERR_STAT_CMD Register (Offset = 5E8h) [reset = 0h]
5ECh	MSS_CR5B_AHB_BUS_SAFETY_ERR_STAT_WRITE		MSS_CR5B_AHB_BUS_SAFETY_ERR_STAT_WRITE Register (Offset = 5ECh) [reset = 0h]
5F0h	MSS_CR5B_AHB_BUS_SAFETY_ERR_STAT_READ		MSS_CR5B_AHB_BUS_SAFETY_ERR_STAT_READ Register (Offset = 5F0h) [reset = 0h]
5F4h	MSS_CR5B_AHB_BUS_SAFETY_ERR_STAT_WRITERESP		MSS_CR5B_AHB_BUS_SAFETY_ERR_STAT_WRITERESP Register (Offset = 5F4h) [reset = 0h]
5F8h	DMM_CTRL_REG		DMM_CTRL_REG Register (Offset = 5F8h) [reset = X]
5FCh	MSS_CR5A_MBOX_WRITE_DONE		MSS_CR5A_MBOX_WRITE_DONE Register (Offset = 5FCh) [reset = X]
600h	MSS_CR5A_MBOX_READ_REQ		MSS_CR5A_MBOX_READ_REQ Register (Offset = 600h) [reset = X]
604h	MSS_CR5A_MBOX_READ_DONE		MSS_CR5A_MBOX_READ_DONE Register (Offset = 604h) [reset = X]
608h	MSS_CR5B_MBOX_WRITE_DONE		MSS_CR5B_MBOX_WRITE_DONE Register (Offset = 608h) [reset = X]
60Ch	MSS_CR5B_MBOX_READ_REQ		MSS_CR5B_MBOX_READ_REQ Register (Offset = 60Ch) [reset = X]
610h	MSS_CR5B_MBOX_READ_DONE		MSS_CR5B_MBOX_READ_DONE Register (Offset = 610h) [reset = X]
614h	MSS_PBIST_KEY_RST		MSS_PBIST_KEY_RST Register (Offset = 614h) [reset = X]
618h	MSS_PBIST_REG0		MSS_PBIST_REG0 Register (Offset = 618h) [reset = 0h]

Copyright © 2025 Texas Instruments Incorporated

Table 6-922. MSS_CTRL_MEMORY_MAP Registers (continued)

Offset	Acronym	Register Name	Section
61Ch	MSS_PBIST_REG1		MSS_PBIST_REG1 Register (Offset = 61Ch) [reset = 0h]
620h	MSS_PBIST_REG2		MSS_PBIST_REG2 Register (Offset = 620h) [reset = 0h]
624h	MSS_QSPI_CONFIG		MSS_QSPI_CONFIG Register (Offset = 624h) [reset = X]
628h	MSS_STC_CONTROL		MSS_STC_CONTROL Register (Offset = 628h) [reset = X]
62Ch	MSS_CTI_TRIG_SEL		MSS_CTI_TRIG_SEL Register (Offset = 62Ch) [reset = X]
630h	MSS_DBGSS_CTI_TRIG_SEL		MSS_DBGSS_CTI_TRIG_SEL Register (Offset = 630h) [reset = X]
634h	MSS_BOOT_INFO_REG0		MSS_BOOT_INFO_REG0 Register (Offset = 634h) [reset = 0h]
638h	MSS_BOOT_INFO_REG1		MSS_BOOT_INFO_REG1 Register (Offset = 638h) [reset = 0h]
63Ch	MSS_BOOT_INFO_REG2		MSS_BOOT_INFO_REG2 Register (Offset = 63Ch) [reset = 0h]
640h	MSS_BOOT_INFO_REG3		MSS_BOOT_INFO_REG3 Register (Offset = 640h) [reset = 0h]
644h	MSS_BOOT_INFO_REG4		MSS_BOOT_INFO_REG4 Register (Offset = 644h) [reset = 0h]
648h	MSS_BOOT_INFO_REG5		MSS_BOOT_INFO_REG5 Register (Offset = 648h) [reset = 0h]
64Ch	MSS_BOOT_INFO_REG6		MSS_BOOT_INFO_REG6 Register (Offset = 64Ch) [reset = 0h]
650h	MSS_BOOT_INFO_REG7		MSS_BOOT_INFO_REG7 Register (Offset = 650h) [reset = 0h]
654h	MSS_TPTC_ECCAGGR_CLK_CNTRL		MSS_TPTC_ECCAGGR_CLK_CNTRL Register (Offset = 654h) [reset = X]

Copyright © 2025 Texas Instruments Incorporated

Table 6-922. MSS_CTRL_MEMORY_MAP Registers (continued)

Offset	Acronym	Register Name	Section
658h	MSS_PERIPH_ERRAGG_MASK0		MSS_PERIPH_ERRAGG_MASK0 Register (Offset = 658h) [reset = X]
65Ch	MSS_PERIPH_ERRAGG_STATUS0		MSS_PERIPH_ERRAGG_STATUS0 Register (Offset = 65Ch) [reset = X]
660h	MSS_PERIPH_ERRAGG_STATUS_RAW0		MSS_PERIPH_ERRAGG_STATUS_RAW0 Register (Offset = 660h) [reset = X]
664h	MSS_PERIPH_ERRAGG_MASK1		MSS_PERIPH_ERRAGG_MASK1 Register (Offset = 664h) [reset = X]
668h	MSS_PERIPH_ERRAGG_STATUS1		MSS_PERIPH_ERRAGG_STATUS1 Register (Offset = 668h) [reset = X]
66Ch	MSS_PERIPH_ERRAGG_STATUS_RAW1		MSS_PERIPH_ERRAGG_STATUS_RAW1 Register (Offset = 66Ch) [reset = X]
670h	MSS_DMM_EVENT0_REG		MSS_DMM_EVENT0_REG Register (Offset = 670h) [reset = X]
674h	MSS_DMM_EVENT1_REG		MSS_DMM_EVENT1_REG Register (Offset = 674h) [reset = X]
678h	MSS_DMM_EVENT2_REG		MSS_DMM_EVENT2_REG Register (Offset = 678h) [reset = X]
67Ch	MSS_DMM_EVENT3_REG		MSS_DMM_EVENT3_REG Register (Offset = 67Ch) [reset = X]
680h	MSS_DMM_EVENT4_REG		MSS_DMM_EVENT4_REG Register (Offset = 680h) [reset = X]
684h	MSS_DMM_EVENT5_REG		MSS_DMM_EVENT5_REG Register (Offset = 684h) [reset = X]
688h	MSS_DMM_EVENT6_REG		MSS_DMM_EVENT6_REG Register (Offset = 688h) [reset = X]
68Ch	MSS_DMM_EVENT7_REG		MSS_DMM_EVENT7_REG Register (Offset = 68Ch) [reset = X]

Copyright © 2025 Texas Instruments Incorporated

Table 6-922. MSS_CTRL_MEMORY_MAP Registers (continued)

Offset	Acronym	Register Name	Section
690h	MSS_DMM_EVENT8_REG		MSS_DMM_EVENT 8_REG Register (Offset = 690h) [reset = X]
694h	MSS_DMM_EVENT9_REG		MSS_DMM_EVENT 9_REG Register (Offset = 694h) [reset = X]
698h	MSS_DMM_EVENT10_REG		MSS_DMM_EVENT 10_REG Register (Offset = 698h) [reset = X]
69Ch	MSS_DMM_EVENT11_REG		MSS_DMM_EVENT 11_REG Register (Offset = 69Ch) [reset = X]
6A0h	MSS_DMM_EVENT12_REG		MSS_DMM_EVENT 12_REG Register (Offset = 6A0h) [reset = X]
6A4h	MSS_DMM_EVENT13_REG		MSS_DMM_EVENT 13_REG Register (Offset = 6A4h) [reset = X]
6A8h	MSS_DMM_EVENT14_REG		MSS_DMM_EVENT 14_REG Register (Offset = 6A8h) [reset = X]
6ACh	MSS_DMM_EVENT15_REG		MSS_DMM_EVENT 15_REG Register (Offset = 6ACh) [reset = X]
6B0h	MSS_TPTC_BOUNDARY_CFG		MSS_TPTC_BOUN DARY_CFG Register (Offset = 6B0h) [reset = X]
6B4h	MSS_TPTC_XID_REORDER_CFG		MSS_TPTC_XID_R EORDER_CFG Register (Offset = 6B4h) [reset = X]
6B8h	GPADC_CTRL		GPADC_CTRL Register (Offset = 6B8h) [reset = X]
6BCh	HW_Sync_FE_CTRL		HW_Sync_FE_CTR L Register (Offset = 6BCh) [reset = X]
6C0h	DEBUGSS_CSETB_FLUSH		DEBUGSS_CSETB _FLUSH Register (Offset = 6C0h) [reset = X]
6C4h	ANALOG_WU_STATUS_REG_POLARITY _INV		ANALOG_WU_STA TUS_REG_POLARI TY_INV Register (Offset = 6C4h) [reset = 3D5Ch]

Copyright © 2025 Texas Instruments Incorporated

Table 6-922. MSS_CTRL_MEMORY_MAP Registers (continued)

Offset	Acronym	Register Name	Section
6C8h	ANALOG_CLK_STATUS_REG_POLARITY_INV		ANALOG_CLK_STATUS_REG_POLARITY_INV Register (Offset = 6C8h) [reset = 0h]
6CCh	ANALOG_WU_STATUS_REG_GRP1_MASK		ANALOG_WU_STATUS_REG_GRP1_MASK Register (Offset = 6CCh) [reset = FFFFFFFFh]
6D0h	ANALOG_CLK_STATUS_REG_GRP1_MASK		ANALOG_CLK_STATUS_REG_GRP1_MASK Register (Offset = 6D0h) [reset = FFFFFFFFh]
6D4h	ANALOG_WU_STATUS_REG_GRP2_MASK		ANALOG_WU_STATUS_REG_GRP2_MASK Register (Offset = 6D4h) [reset = FFFFFFFFh]
6D8h	ANALOG_CLK_STATUS_REG_GRP2_MASK		ANALOG_CLK_STATUS_REG_GRP2_MASK Register (Offset = 6D8h) [reset = FFFFFFFFh]
6DCh	NERROR_MASK		NERROR_MASK Register (Offset = 6DCh) [reset = X]
800h	R5_CONTROL		R5_CONTROL Register (Offset = 800h) [reset = X]
804h	R5_ROM_ECLIPSE		R5_ROM_ECLIPSE Register (Offset = 804h) [reset = X]
808h	R5_COREA_HALT		R5_COREA_HALT Register (Offset = 808h) [reset = X]
80Ch	R5_COREB_HALT		R5_COREB_HALT Register (Offset = 80Ch) [reset = X]
810h	R5_STATUS_REG		R5_STATUS_REG Register (Offset = 810h) [reset = X]
FD0h	HW_SPARE_RW0		HW_SPARE_RW0 Register (Offset = FD0h) [reset = 0h]
FD4h	HW_SPARE_RW1		HW_SPARE_RW1 Register (Offset = FD4h) [reset = 0h]
FD8h	HW_SPARE_RW2		HW_SPARE_RW2 Register (Offset = FD8h) [reset = 0h]
FDCh	HW_SPARE_RW3		HW_SPARE_RW3 Register (Offset = FDCh) [reset = 0h]

Copyright © 2025 Texas Instruments Incorporated

Table 6-922. MSS_CTRL_MEMORY_MAP Registers (continued)

Offset	Acronym	Register Name	Section
FE0h	HW_SPARE_RO0		HW_SPARE_RO0 Register (Offset = FE0h) [reset = 0h]
FE4h	HW_SPARE_RO1		HW_SPARE_RO1 Register (Offset = FE4h) [reset = 0h]
FE8h	HW_SPARE_RO2		HW_SPARE_RO2 Register (Offset = FE8h) [reset = 0h]
FECh	HW_SPARE_RO3		HW_SPARE_RO3 Register (Offset = FECh) [reset = 0h]
FF0h	HW_SPARE_WPH		HW_SPARE_WPH Register (Offset = FF0h) [reset = 0h]
FF4h	HW_SPARE_REC		HW_SPARE_REC Register (Offset = FF4h) [reset = 0h]
1008h	LOCK0_KICK0	- KICK0 component	LOCK0_KICK0 Register (Offset = 1008h) [reset = 0h]
100Ch	LOCK0_KICK1	- KICK1 component	LOCK0_KICK1 Register (Offset = 100Ch) [reset = 0h]
1010h	intr_raw_status	Interrupt Raw Status/Set Register	intr_raw_status Register (Offset = 1010h) [reset = X]
1014h	intr_enabled_status_clear	Interrupt Enabled Status/Clear register	intr_enabled_status_clear Register (Offset = 1014h) [reset = X]
1018h	intr_enable	Interrupt Enable register	intr_enable Register (Offset = 1018h) [reset = X]
101Ch	intr_enable_clear	Interrupt Enable Clear register	intr_enable_clear Register (Offset = 101Ch) [reset = X]
1020h	eoi	EOI register	eoi Register (Offset = 1020h) [reset = X]
1024h	fault_address	Fault Address register	fault_address Register (Offset = 1024h) [reset = 0h]
1028h	fault_type_status	Fault Type Status register	fault_type_status Register (Offset = 1028h) [reset = X]
102Ch	fault_attr_status	Fault Attribute Status register	fault_attr_status Register (Offset = 102Ch) [reset = 0h]
1030h	fault_clear	Fault Clear register	fault_clear Register (Offset = 1030h) [reset = X]

6.2.7.1 PID Register (Offset = 0h) [reset = 61800213h]

PID is shown in Figure 6-916 and described in Table 6-923.

Copyright © 2025 Texas Instruments Incorporated

Return to the Summary Table.

PID register

Figure 6-916. PID Register

31	30	29	28	27	26	25	24
PID_msb16							
R-6180h							
23	22	21	20	19	18	17	16
PID_msb16							
R-6180h							
15	14	13	12	11	10	9	8
PID_misc					PID_major		
R-0h					R-2h		
7	6	5	4	3	2	1	0
PID_custom		PID_minor					
R-0h		R-13h					

Table 6-923. PID Register Field Descriptions

Bit	Field	Type	Reset	Description
31-16	PID_msb16	R	6180h	
15-11	PID_misc	R	0h	
10-8	PID_major	R	2h	
7-6	PID_custom	R	0h	
5-0	PID_minor	R	13h	

6.2.7.2 MSS_SW_INT Register (Offset = 4h) [reset = X]

MSS_SW_INT is shown in Figure 6-917 and described in Table 6-924.

Return to the Summary Table.

Figure 6-917. MSS_SW_INT Register

31	30	29	28	27	26	25	24	23	22	21	20	19	18	17	16	15	14	13	12	11	10	9	8	7	6	5	4	3	2	1	0
RESERVED																											pulse				
R/W-X																											R/W-0h				

Table 6-924. MSS_SW_INT Register Field Descriptions

Bit	Field	Type	Reset	Description
31-5	RESERVED	R/W	X	
4-0	pulse	R/W	0h	Write_pulse bit field: writing 1'b1 to each bit will trigger MSS_SW_INT<0-4> respectively to CR5A/B.

6.2.7.3 MSS_CAPEVNT_SEL Register (Offset = 8h) [reset = X]

MSS_CAPEVNT_SEL is shown in Figure 6-918 and described in Table 6-925.

Return to the Summary Table.

Figure 6-918. MSS_CAPEVNT_SEL Register

31	30	29	28	27	26	25	24	23	22	21	20	19	18	17	16	15	14	13	12	11	10	9	8	7	6	5	4	3	2	1	0

Copyright © 2025 Texas Instruments Incorporated

Figure 6-918. MSS_CAPEVNT_SEL Register (continued)

RESERVED	src1	src0
R/W-X	R/W-0h	R/W-0h

Table 6-925. MSS_CAPEVNT_SEL Register Field Descriptions

Bit	Field	Type	Reset	Description
31-16	RESERVED	R/W	X	
15-8	src1	R/W	0h	Writing a value 'N' will select Nth interrupt from CR5A/B interrupt mapping to trigger CAP-EVENT1 to all MSS_RTIs. Example: writing 8'h0A will select 10th interrupt to trigger CAP-EVENT1 to all MSS_RTIs. (which is MSS_RTIB_INT1)
7-0	src0	R/W	0h	Writing a value 'N' will select Nth interrupt from CR5A/B interrupt mapping to trigger CAP-EVENT0 to all MSS_RTIs. Example: writing 8'h0A will select 10th interrupt to trigger CAP-EVENT0 to all MSS_RTIs. (which is MSS_RTIB_INT1)

6.2.7.4 MSS_DMA_REQ_SEL Register (Offset = Ch) [reset = 0h]

MSS_DMA_REQ_SEL is shown in Figure 6-919 and described in Table 6-926.

Return to the Summary Table.

Figure 6-919. MSS_DMA_REQ_SEL Register

31	30	29	28	27	26	25	24	23	22	21	20	19	18	17	16	15	14	13	12	11	10	9	8	7	6	5	4	3	2	1	0
select																															
R/W-0h																															

Table 6-926. MSS_DMA_REQ_SEL Register Field Descriptions

Bit	Field	Type	Reset	Description
31-0	select	R/W	0h	Reserved for R&D. Do not touch

6.2.7.5 MSS_DMA1_REQ_SEL Register (Offset = 10h) [reset = 0h]

MSS_DMA1_REQ_SEL is shown in Figure 6-920 and described in Table 6-927.

Return to the Summary Table.

Figure 6-920. MSS_DMA1_REQ_SEL Register

31	30	29	28	27	26	25	24	23	22	21	20	19	18	17	16	15	14	13	12	11	10	9	8	7	6	5	4	3	2	1	0
select																															
R/W-0h																															

Table 6-927. MSS_DMA1_REQ_SEL Register Field Descriptions

Bit	Field	Type	Reset	Description
31-0	select	R/W	0h	Reserved for R&D. Do not touch

6.2.7.6 MSS_IRQ_REQ_SEL Register (Offset = 14h) [reset = 0h]

MSS_IRQ_REQ_SEL is shown in Figure 6-921 and described in Table 6-928.

Return to the Summary Table.

Figure 6-921. MSS_IRQ_REQ_SEL Register

31	30	29	28	27	26	25	24	23	22	21	20	19	18	17	16	15	14	13	12	11	10	9	8	7	6	5	4	3	2	1	0

Copyright © 2025 Texas Instruments Incorporated

Figure 6-921. MSS_IRQ_REQ_SEL Register (continued)

select
R/W-0h

Table 6-928. MSS_IRQ_REQ_SEL Register Field Descriptions

Bit	Field	Type	Reset	Description
31-0	select	R/W	0h	Reserved for R&D. Do not touch

6.2.7.7 MSS_SPI_TRIG_SRC Register (Offset = 18h) [reset = X]

MSS_SPI_TRIG_SRC is shown in Figure 6-922 and described in Table 6-929.

Return to the Summary Table.

Figure 6-922. MSS_SPI_TRIG_SRC Register

31	30	29	28	27	26	25	24
RESERVED						trig_spib	
R/W-X						R/W-0h	
23	22	21	20	19	18	17	16
trig_spib							
R/W-0h							
15	14	13	12	11	10	9	8
RESERVED							
R/W-X							
7	6	5	4	3	2	1	0
RESERVED						trig_spia	
R/W-X						R/W-0h	

Table 6-929. MSS_SPI_TRIG_SRC Register Field Descriptions

Bit	Field	Type	Reset	Description
31-27	RESERVED	R/W	X	
26-16	trig_spib	R/W	0h	Writing 1'b1 to each bit will trigger MSS_SPIB Trigger<0-10> respectively
15-2	RESERVED	R/W	X	
1-0	trig_spia	R/W	0h	Writing 1'b1 to each bit will trigger MSS_SPIA Trigger<0-1> respectively

6.2.7.8 MSS_ATCM_MEM_INIT Register (Offset = 1Ch) [reset = X]

MSS_ATCM_MEM_INIT is shown in Figure 6-923 and described in Table 6-930.

Return to the Summary Table.

Figure 6-923. MSS_ATCM_MEM_INIT Register

31	30	29	28	27	26	25	24
RESERVED							
R/W-X							
23	22	21	20	19	18	17	16
RESERVED							
R/W-X							

Copyright © 2025 Texas Instruments Incorporated

Figure 6-923. MSS_ATCM_MEM_INIT Register (continued)

15	14	13	12	11	10	9	8
RESERVED							
R/W-X							
7	6	5	4	3	2	1	0
RESERVED							mem_init
R/W-X							R/W-0h

Table 6-930. MSS_ATCM_MEM_INIT Register Field Descriptions

Bit	Field	Type	Reset	Description
31-1	RESERVED	R/W	X	
0	mem_init	R/W	0h	Write_pulse bit field: Writing 1'b1 will start initializing the ATCM banks of CR5A/B. Value in each row is initialized to 0x0C_0000_0000

6.2.7.9 MSS_ATCM_MEM_INIT_DONE Register (Offset = 20h) [reset = X]

MSS_ATCM_MEM_INIT_DONE is shown in Figure 6-924 and described in Table 6-931.

Return to the Summary Table.

Figure 6-924. MSS_ATCM_MEM_INIT_DONE Register

31	30	29	28	27	26	25	24
RESERVED							
R/W-X							
23	22	21	20	19	18	17	16
RESERVED							
R/W-X							
15	14	13	12	11	10	9	8
RESERVED							
R/W-X							
7	6	5	4	3	2	1	0
RESERVED							mem_init_done
R/W-X							R/W-0h

Table 6-931. MSS_ATCM_MEM_INIT_DONE Register Field Descriptions

Bit	Field	Type	Reset	Description
31-1	RESERVED	R/W	X	
0	mem_init_done	R/W	0h	This field will be high once initialization of ATCM banks is finished. Writing '1' would clear the bit.

6.2.7.10 MSS_ATCM_MEM_INIT_STATUS Register (Offset = 24h) [reset = X]

MSS_ATCM_MEM_INIT_STATUS is shown in Figure 6-925 and described in Table 6-932.

Return to the Summary Table.

Figure 6-925. MSS_ATCM_MEM_INIT_STATUS Register

31	30	29	28	27	26	25	24
RESERVED							

Copyright © 2025 Texas Instruments Incorporated

Figure 6-925. MSS_ATCM_MEM_INIT_STATUS Register (continued)

R-X							
23	22	21	20	19	18	17	16
RESERVED							
R-X							
15	14	13	12	11	10	9	8
RESERVED							
R-X							
7	6	5	4	3	2	1	0
RESERVED							mem_status
R-X							R-0h

Table 6-932. MSS_ATCM_MEM_INIT_STATUS Register Field Descriptions

Bit	Field	Type	Reset	Description
31-1	RESERVED	R	X	
0	mem_status	R	0h	1'b0: No initialization is happening for ATCM banks of CR5A/B 1'b1: Initialization is in progress for ATCM banks of CR5A/B

6.2.7.11 MSS_BTCM_MEM_INIT Register (Offset = 28h) [reset = X]

MSS_BTCM_MEM_INIT is shown in Figure 6-926 and described in Table 6-933.

Return to the Summary Table.

Figure 6-926. MSS_BTCM_MEM_INIT Register

31	30	29	28	27	26	25	24
RESERVED							
R/W-X							
23	22	21	20	19	18	17	16
RESERVED							
R/W-X							
15	14	13	12	11	10	9	8
RESERVED							
R/W-X							
7	6	5	4	3	2	1	0
RESERVED							mem_init
R/W-X							R/W-0h

Table 6-933. MSS_BTCM_MEM_INIT Register Field Descriptions

Bit	Field	Type	Reset	Description
31-1	RESERVED	R/W	X	
0	mem_init	R/W	0h	Write_pulse bit field: Writing 1'b1 will start initializing the B0/1TCM banks of CR5A/B

6.2.7.12 MSS_BTCM_MEM_INIT_DONE Register (Offset = 2Ch) [reset = X]

MSS_BTCM_MEM_INIT_DONE is shown in Figure 6-927 and described in Table 6-934.

Copyright © 2025 Texas Instruments Incorporated

Return to the Summary Table.

Figure 6-927. MSS_BTCM_MEM_INIT_DONE Register

31	30	29	28	27	26	25	24
RESERVED							
R/W-X							
23	22	21	20	19	18	17	16
RESERVED							
R/W-X							
15	14	13	12	11	10	9	8
RESERVED							
R/W-X							
7	6	5	4	3	2	1	0
RESERVED							mem_init_done
R/W-X							R/W-0h

Table 6-934. MSS_BTCM_MEM_INIT_DONE Register Field Descriptions

Bit	Field	Type	Reset	Description
31-1	RESERVED	R/W	X	
0	mem_init_done	R/W	0h	This field will be high once initialization of B0/1TCM banks is finished. Writing '1' would clear the bit.

6.2.7.13 MSS_BTCM_MEM_INIT_STATUS Register (Offset = 30h) [reset = X]

MSS_BTCM_MEM_INIT_STATUS is shown in Figure 6-928 and described in Table 6-935.

Return to the Summary Table.

Figure 6-928. MSS_BTCM_MEM_INIT_STATUS Register

31	30	29	28	27	26	25	24
RESERVED							
R-X							
23	22	21	20	19	18	17	16
RESERVED							
R-X							
15	14	13	12	11	10	9	8
RESERVED							
R-X							
7	6	5	4	3	2	1	0
RESERVED							mem_status
R-X							R-0h

Table 6-935. MSS_BTCM_MEM_INIT_STATUS Register Field Descriptions

Bit	Field	Type	Reset	Description
31-1	RESERVED	R	X	
0	mem_status	R	0h	1'b0: No initialization is happening for B0/1TCM banks of CR5A/B 1'b1: Initialization is in progress for B0/1TCM banks of CR5A/B

Copyright © 2025 Texas Instruments Incorporated

6.2.7.14 MSS_L2_MEM_INIT Register (Offset = 34h) [reset = X]

MSS_L2_MEM_INIT is shown in Figure 6-929 and described in Table 6-936.

Return to the Summary Table.

Figure 6-929. MSS_L2_MEM_INIT Register

31	30	29	28	27	26	25	24
RESERVED							
R/W-X							
23	22	21	20	19	18	17	16
RESERVED							
R/W-X							
15	14	13	12	11	10	9	8
RESERVED							
R/W-X							
7	6	5	4	3	2	1	0
RESERVED						partition1	partition0
R/W-X						R/W-0h	R/W-0h

Table 6-936. MSS_L2_MEM_INIT Register Field Descriptions

Bit	Field	Type	Reset	Description
31-2	RESERVED	R/W	X	
1	partition1	R/W	0h	Write_pulse bit field: Writing 1'b1 will start initializing the L2 Bank1. Value in each row is initialized to 0x0
0	partition0	R/W	0h	Write_pulse bit field: Writing 1'b1 will start initializing the L2 Bank0. Value in each row is initialized to 0x0

6.2.7.15 MSS_L2_MEM_INIT_DONE Register (Offset = 38h) [reset = X]

MSS_L2_MEM_INIT_DONE is shown in Figure 6-930 and described in Table 6-937.

Return to the Summary Table.

Figure 6-930. MSS_L2_MEM_INIT_DONE Register

31	30	29	28	27	26	25	24
RESERVED							
R/W-X							
23	22	21	20	19	18	17	16
RESERVED							
R/W-X							
15	14	13	12	11	10	9	8
RESERVED							
R/W-X							
7	6	5	4	3	2	1	0
RESERVED						partition1	partition0
R/W-X						R/W-0h	R/W-0h

Copyright © 2025 Texas Instruments Incorporated

Table 6-937. MSS_L2_MEM_INIT_DONE Register Field Descriptions

Bit	Field	Type	Reset	Description
31-2	RESERVED	R/W	X	
1	partition1	R/W	0h	This field will be high once intialization of L2 bank1 is finished. Writing '1' would clear the bit
0	partition0	R/W	0h	This field will be high once intialization of L2 bank0 is finished. Writing '1' would clear the bit

6.2.7.16 MSS_L2_MEM_INIT_STATUS Register (Offset = 3Ch) [reset = X]

MSS_L2_MEM_INIT_STATUS is shown in Figure 6-931 and described in Table 6-938.

Return to the Summary Table.

Figure 6-931. MSS_L2_MEM_INIT_STATUS Register

31	30	29	28	27	26	25	24
RESERVED							
R-X							
23	22	21	20	19	18	17	16
RESERVED							
R-X							
15	14	13	12	11	10	9	8
RESERVED							
R-X							
7	6	5	4	3	2	1	0
RESERVED						partition1	partition0
R-X						R-0h	R-0h

Table 6-938. MSS_L2_MEM_INIT_STATUS Register Field Descriptions

Bit	Field	Type	Reset	Description
31-2	RESERVED	R	X	
1	partition1	R	0h	1'b0: No initialization is happening for L2 bank1 1'b1: Initialization is in progress for L2 bank1
0	partition0	R	0h	1'b0: No initialization is happening for L2 bank0 1'b1: Initialization is in progress for L2 bank0

6.2.7.17 MSS_MAILBOX_MEM_INIT Register (Offset = 40h) [reset = X]

MSS_MAILBOX_MEM_INIT is shown in Figure 6-932 and described in Table 6-939.

Return to the Summary Table.

Figure 6-932. MSS_MAILBOX_MEM_INIT Register

31	30	29	28	27	26	25	24
RESERVED							
R/W-X							
23	22	21	20	19	18	17	16
RESERVED							
R/W-X							
15	14	13	12	11	10	9	8

Copyright © 2025 Texas Instruments Incorporated

Figure 6-932. MSS_MAILBOX_MEM_INIT Register (continued)

RESERVED							
R/W-X							
7	6	5	4	3	2	1	0
RESERVED							mem0_init
R/W-X							R/W-0h

Table 6-939. MSS_MAILBOX_MEM_INIT Register Field Descriptions

Bit	Field	Type	Reset	Description
31-1	RESERVED	R/W	X	
0	mem0_init	R/W	0h	Write_pulse bit field: Writing 1'b1 will start initializing the MSS_MBOX. Value in each row is initialized to 0x0

6.2.7.18 MSS_MAIlBOX_MEM_INIT_DONE Register (Offset = 44h) [reset = X]

MSS_MAIlBOX_MEM_INIT_DONE is shown in Figure 6-933 and described in Table 6-940.

Return to the Summary Table.

Figure 6-933. MSS_MAIlBOX_MEM_INIT_DONE Register

31	30	29	28	27	26	25	24
RESERVED							
R/W-X							
23	22	21	20	19	18	17	16
RESERVED							
R/W-X							
15	14	13	12	11	10	9	8
RESERVED							
R/W-X							
7	6	5	4	3	2	1	0
RESERVED							mem0_done
R/W-X							R/W-0h

Table 6-940. MSS_MAIlBOX_MEM_INIT_DONE Register Field Descriptions

Bit	Field	Type	Reset	Description
31-1	RESERVED	R/W	X	
0	mem0_done	R/W	0h	This field will be high once intialization of MSS_MBOX is finished. Writing '1' would clear the bit

6.2.7.19 MSS_MAILBOX_MEM_INIT_STATUS Register (Offset = 48h) [reset = X]

MSS_MAILBOX_MEM_INIT_STATUS is shown in Figure 6-934 and described in Table 6-941.

Return to the Summary Table.

Figure 6-934. MSS_MAILBOX_MEM_INIT_STATUS Register

31	30	29	28	27	26	25	24
RESERVED							
R-X							
23	22	21	20	19	18	17	16

Copyright © 2025 Texas Instruments Incorporated

Figure 6-934. MSS_MAILBOX_MEM_INIT_STATUS Register (continued)

RESERVED							
R-X							
15	14	13	12	11	10	9	8
RESERVED							
R-X							
7	6	5	4	3	2	1	0
RESERVED							mem0_status
R-X							R-0h

Table 6-941. MSS_MAILBOX_MEM_INIT_STATUS Register Field Descriptions

Bit	Field	Type	Reset	Description
31-1	RESERVED	R	X	
0	mem0_status	R	0h	1'b0: No initialization is happening for MSS_MBOX 1'b1: Initialization is in progress for MSS_MBOX

6.2.7.20 MSS_RETRAM_MEM_INIT Register (Offset = 4Ch) [reset = X]

MSS_RETRAM_MEM_INIT is shown in Figure 6-935 and described in Table 6-942.

Return to the Summary Table.

Figure 6-935. MSS_RETRAM_MEM_INIT Register

31	30	29	28	27	26	25	24
RESERVED							
R/W-X							
23	22	21	20	19	18	17	16
RESERVED							
R/W-X							
15	14	13	12	11	10	9	8
RESERVED							
R/W-X							
7	6	5	4	3	2	1	0
RESERVED							mem0_init
R/W-X							R/W-0h

Table 6-942. MSS_RETRAM_MEM_INIT Register Field Descriptions

Bit	Field	Type	Reset	Description
31-1	RESERVED	R/W	X	
0	mem0_init	R/W	0h	Write_pulse bit field: Writing 1'b1 will start initializing the MSS_RETRAM. Value in each row is initialized to 0x0

6.2.7.21 MSS_RETRAM_MEM_INIT_DONE Register (Offset = 50h) [reset = X]

MSS_RETRAM_MEM_INIT_DONE is shown in Figure 6-936 and described in Table 6-943.

Return to the Summary Table.

Figure 6-936. MSS_RETRAM_MEM_INIT_DONE Register

31	30	29	28	27	26	25	24

Copyright © 2025 Texas Instruments Incorporated

Figure 6-936. MSS_RETRAM_MEM_INIT_DONE Register (continued)

RESERVED							
R/W-X							
23	22	21	20	19	18	17	16
RESERVED							
R/W-X							
15	14	13	12	11	10	9	8
RESERVED							
R/W-X							
7	6	5	4	3	2	1	0
RESERVED							mem0_done
R/W-X							R/W-0h

Table 6-943. MSS_RETRAM_MEM_INIT_DONE Register Field Descriptions

Bit	Field	Type	Reset	Description
31-1	RESERVED	R/W	X	
0	mem0_done	R/W	0h	This field will be high once intialization of MSS_RETRAM is finished. Writing '1' would clear the bit

6.2.7.22 MSS_RETRAM_MEM_INIT_STATUS Register (Offset = 54h) [reset = X]

MSS_RETRAM_MEM_INIT_STATUS is shown in Figure 6-937 and described in Table 6-944.

Return to the Summary Table.

Figure 6-937. MSS_RETRAM_MEM_INIT_STATUS Register

31	30	29	28	27	26	25	24
RESERVED							
R-X							
23	22	21	20	19	18	17	16
RESERVED							
R-X							
15	14	13	12	11	10	9	8
RESERVED							
R-X							
7	6	5	4	3	2	1	0
RESERVED							mem0_status
R-X							R-0h

Table 6-944. MSS_RETRAM_MEM_INIT_STATUS Register Field Descriptions

Bit	Field	Type	Reset	Description
31-1	RESERVED	R	X	
0	mem0_status	R	0h	1'b0: No initialization is happening for MSS_RETRAM 1'b1: Initialization is in progress for MSS_RETRAM

6.2.7.23 MSS_SPIA_MEM_INIT Register (Offset = 58h) [reset = X]

MSS_SPIA_MEM_INIT is shown in Figure 6-938 and described in Table 6-945.

Copyright © 2025 Texas Instruments Incorporated

Return to the Summary Table.

Figure 6-938. MSS_SPIA_MEM_INIT Register

31	30	29	28	27	26	25	24
RESERVED							
R/W-X							
23	22	21	20	19	18	17	16
RESERVED							
R/W-X							
15	14	13	12	11	10	9	8
RESERVED							
R/W-X							
7	6	5	4	3	2	1	0
RESERVED							mem0_init
R/W-X							R/W-0h

Table 6-945. MSS_SPIA_MEM_INIT Register Field Descriptions

Bit	Field	Type	Reset	Description
31-1	RESERVED	R/W	X	
0	mem0_init	R/W	0h	Write_pulse bit field: Writing 1'b1 will start initializing the MSS_SPIA. Value in each row is initialized to 0x0

6.2.7.24 MSS_SPIA_MEM_INIT_DONE Register (Offset = 5Ch) [reset = X]

MSS_SPIA_MEM_INIT_DONE is shown in Figure 6-939 and described in Table 6-946.

Return to the Summary Table.

Figure 6-939. MSS_SPIA_MEM_INIT_DONE Register

31	30	29	28	27	26	25	24
RESERVED							
R/W-X							
23	22	21	20	19	18	17	16
RESERVED							
R/W-X							
15	14	13	12	11	10	9	8
RESERVED							
R/W-X							
7	6	5	4	3	2	1	0
RESERVED							mem0_done
R/W-X							R/W-0h

Table 6-946. MSS_SPIA_MEM_INIT_DONE Register Field Descriptions

Bit	Field	Type	Reset	Description
31-1	RESERVED	R/W	X	
0	mem0_done	R/W	0h	This field will be high once intialization of MSS_SPIA is finished. Writing '1' would clear the bit

Copyright © 2025 Texas Instruments Incorporated

6.2.7.25 MSS_SPIA_MEM_INIT_STATUS Register (Offset = 60h) [reset = X]

MSS_SPIA_MEM_INIT_STATUS is shown in Figure 6-940 and described in Table 6-947.

Return to the Summary Table.

Figure 6-940. MSS_SPIA_MEM_INIT_STATUS Register

31	30	29	28	27	26	25	24
RESERVED							
R-X							
23	22	21	20	19	18	17	16
RESERVED							
R-X							
15	14	13	12	11	10	9	8
RESERVED							
R-X							
7	6	5	4	3	2	1	0
RESERVED							mem0_status
R-X							R-0h

Table 6-947. MSS_SPIA_MEM_INIT_STATUS Register Field Descriptions

Bit	Field	Type	Reset	Description
31-1	RESERVED	R	X	
0	mem0_status	R	0h	1'b0: No initialization is happening for MSS_SPIA 1'b1: Initialization is in progress for MSS_SPIA

6.2.7.26 MSS_SPIB_MEM_INIT Register (Offset = 64h) [reset = X]

MSS_SPIB_MEM_INIT is shown in Figure 6-941 and described in Table 6-948.

Return to the Summary Table.

Figure 6-941. MSS_SPIB_MEM_INIT Register

31	30	29	28	27	26	25	24
RESERVED							
R/W-X							
23	22	21	20	19	18	17	16
RESERVED							
R/W-X							
15	14	13	12	11	10	9	8
RESERVED							
R/W-X							
7	6	5	4	3	2	1	0
RESERVED							mem0_init
R/W-X							R/W-0h

Table 6-948. MSS_SPIB_MEM_INIT Register Field Descriptions

Bit	Field	Type	Reset	Description
31-1	RESERVED	R/W	X	

Copyright © 2025 Texas Instruments Incorporated

Table 6-948. MSS_SPIB_MEM_INIT Register Field Descriptions (continued)

Bit	Field	Type	Reset	Description
0	mem0_init	R/W	0h	Write_pulse bit field: Writing 1'b1 will start initializing the MSS_SPIB. Value in each row is initialized to 0x0

6.2.7.27 MSS_SPIB_MEM_INIT_DONE Register (Offset = 68h) [reset = X]

MSS_SPIB_MEM_INIT_DONE is shown in Figure 6-942 and described in Table 6-949.

Return to the Summary Table.

Figure 6-942. MSS_SPIB_MEM_INIT_DONE Register

31	30	29	28	27	26	25	24
RESERVED							
R/W-X							
23	22	21	20	19	18	17	16
RESERVED							
R/W-X							
15	14	13	12	11	10	9	8
RESERVED							
R/W-X							
7	6	5	4	3	2	1	0
RESERVED							mem0_done
R/W-X							R/W-0h

Table 6-949. MSS_SPIB_MEM_INIT_DONE Register Field Descriptions

Bit	Field	Type	Reset	Description
31-1	RESERVED	R/W	X	
0	mem0_done	R/W	0h	This field will be high once intialization of MSS_SPIB is finished. Writing '1' would clear the bit

6.2.7.28 MSS_SPIB_MEM_INIT_STATUS Register (Offset = 6Ch) [reset = X]

MSS_SPIB_MEM_INIT_STATUS is shown in Figure 6-943 and described in Table 6-950.

Return to the Summary Table.

Figure 6-943. MSS_SPIB_MEM_INIT_STATUS Register

31	30	29	28	27	26	25	24
RESERVED							
R-X							
23	22	21	20	19	18	17	16
RESERVED							
R-X							
15	14	13	12	11	10	9	8
RESERVED							
R-X							
7	6	5	4	3	2	1	0
RESERVED							mem0_status

Copyright © 2025 Texas Instruments Incorporated

Figure 6-943. MSS_SPIB_MEM_INIT_STATUS Register (continued)

R-X	R-0h

Table 6-950. MSS_SPIB_MEM_INIT_STATUS Register Field Descriptions

Bit	Field	Type	Reset	Description
31-1	RESERVED	R	X	
0	mem0_status	R	0h	1'b0: No initialization is happening for MSS_SPIB 1'b1: Initialization is in progress for MSS_SPIB

6.2.7.29 MSS_TPCC_MEMINIT_START Register (Offset = 70h) [reset = X]

MSS_TPCC_MEMINIT_START is shown in Figure 6-944 and described in Table 6-951.

Return to the Summary Table.

Figure 6-944. MSS_TPCC_MEMINIT_START Register

31	30	29	28	27	26	25	24
RESERVED							
R/W-X							
23	22	21	20	19	18	17	16
RESERVED							tpcc_b_meminit_start
R/W-X							R/W-0h
15	14	13	12	11	10	9	8
RESERVED							
R/W-X							
7	6	5	4	3	2	1	0
RESERVED							tpcc_a_meminit_start
R/W-X							R/W-0h

Table 6-951. MSS_TPCC_MEMINIT_START Register Field Descriptions

Bit	Field	Type	Reset	Description
31-17	RESERVED	R/W	X	
16	tpcc_b_meminit_start	R/W	0h	Write_pulse bit field: Writing 1'b1 will start initializing the MSS_TPCCB
15-1	RESERVED	R/W	X	
0	tpcc_a_meminit_start	R/W	0h	Write_pulse bit field: Writing 1'b1 will start initializing the MSS_TPCCA

6.2.7.30 MSS_TPCC_MEMINIT_DONE Register (Offset = 74h) [reset = X]

MSS_TPCC_MEMINIT_DONE is shown in Figure 6-945 and described in Table 6-952.

Return to the Summary Table.

Figure 6-945. MSS_TPCC_MEMINIT_DONE Register

31	30	29	28	27	26	25	24
RESERVED							
R/W-X							
23	22	21	20	19	18	17	16

Copyright © 2025 Texas Instruments Incorporated

Figure 6-945. MSS_TPCC_MEMINIT_DONE Register (continued)

RESERVED							tpcc_b_meminit_done
R/W-X							R/W-0h
15	14	13	12	11	10	9	8
RESERVED							
R/W-X							
7	6	5	4	3	2	1	0
RESERVED							tpcc_a_meminit_done
R/W-X							R/W-0h

Table 6-952. MSS_TPCC_MEMINIT_DONE Register Field Descriptions

Bit	Field	Type	Reset	Description
31-17	RESERVED	R/W	X	
16	tpcc_b_meminit_done	R/W	0h	This field will be high once intialization of MSS_TPCCB is finished. Writing '1' would clear the bit
15-1	RESERVED	R/W	X	
0	tpcc_a_meminit_done	R/W	0h	This field will be high once intialization of MSS_TPCCA is finished. Writing '1' would clear the bit

6.2.7.31 MSS_TPCC_MEMINIT_STATUS Register (Offset = 78h) [reset = X]

MSS_TPCC_MEMINIT_STATUS is shown in Figure 6-946 and described in Table 6-953.

Return to the Summary Table.

Figure 6-946. MSS_TPCC_MEMINIT_STATUS Register

31	30	29	28	27	26	25	24
RESERVED							
R-X							
23	22	21	20	19	18	17	16
RESERVED							tpcc_b_meminit_status
R-X							R-0h
15	14	13	12	11	10	9	8
RESERVED							
R-X							
7	6	5	4	3	2	1	0
RESERVED							tpcc_a_meminit_status
R-X							R-0h

Table 6-953. MSS_TPCC_MEMINIT_STATUS Register Field Descriptions

Bit	Field	Type	Reset	Description
31-17	RESERVED	R	X	
16	tpcc_b_meminit_status	R	0h	1'b0: No initialization is happening for MSS_TPCCA 1'b1: Initialization is in progress for MSS_TPCCB
15-1	RESERVED	R	X	

Copyright © 2025 Texas Instruments Incorporated

Table 6-953. MSS_TPCC_MEMINIT_STATUS Register Field Descriptions (continued)

Bit	Field	Type	Reset	Description
0	tpcc_a_meminit_status	R	0h	1'b0: No initialization is happening for MSS_TPCCA 1'b1: Initialization is in progress for MSS_TPCCB

6.2.7.32 MSS_GPADC_MEM_INIT Register (Offset = 7Ch) [reset = X]

MSS_GPADC_MEM_INIT is shown in Figure 6-947 and described in Table 6-954.

Return to the Summary Table.

Figure 6-947. MSS_GPADC_MEM_INIT Register

31	30	29	28	27	26	25	24
RESERVED							
R/W-X							
23	22	21	20	19	18	17	16
RESERVED							
R/W-X							
15	14	13	12	11	10	9	8
RESERVED							
R/W-X							
7	6	5	4	3	2	1	0
RESERVED							mem0_init
R/W-X							R/W-0h

Table 6-954. MSS_GPADC_MEM_INIT Register Field Descriptions

Bit	Field	Type	Reset	Description
31-1	RESERVED	R/W	X	
0	mem0_init	R/W	0h	Write_pulse bit field: Writing 1'b1 will start initializing the MSS_GPADC_DATA_MEM. Value in each row is initialized to 0x00_0000_03FF

6.2.7.33 MSS_GPADC_MEM_INIT_DONE Register (Offset = 80h) [reset = X]

MSS_GPADC_MEM_INIT_DONE is shown in Figure 6-948 and described in Table 6-955.

Return to the Summary Table.

Figure 6-948. MSS_GPADC_MEM_INIT_DONE Register

31	30	29	28	27	26	25	24
RESERVED							
R/W-X							
23	22	21	20	19	18	17	16
RESERVED							
R/W-X							
15	14	13	12	11	10	9	8
RESERVED							
R/W-X							
7	6	5	4	3	2	1	0

Copyright © 2025 Texas Instruments Incorporated

Figure 6-948. MSS_GPADC_MEM_INIT_DONE Register (continued)

RESERVED	mem0_done
R/W-X	R/W-0h

Table 6-955. MSS_GPADC_MEM_INIT_DONE Register Field Descriptions

Bit	Field	Type	Reset	Description
31-1	RESERVED	R/W	X	
0	mem0_done	R/W	0h	This field will be high once intialization of MSS_GPADC_DATA_MEM is finished. Writing '1' would clear the bit

6.2.7.34 MSS_GPADC_MEM_INIT_STATUS Register (Offset = 84h) [reset = X]

MSS_GPADC_MEM_INIT_STATUS is shown in Figure 6-949 and described in Table 6-956.

Return to the Summary Table.

Figure 6-949. MSS_GPADC_MEM_INIT_STATUS Register

31	30	29	28	27	26	25	24
RESERVED							
R-X							
23	22	21	20	19	18	17	16
RESERVED							
R-X							
15	14	13	12	11	10	9	8
RESERVED							
R-X							
7	6	5	4	3	2	1	0
RESERVED							mem0_status
R-X							R-0h

Table 6-956. MSS_GPADC_MEM_INIT_STATUS Register Field Descriptions

Bit	Field	Type	Reset	Description
31-1	RESERVED	R	X	
0	mem0_status	R	0h	1'b0: No initialization is happening for MSS_GPADC_DATA_MEM 1'b1: Initialization is in progress for MSS_GPADC_DATA_MEM

6.2.7.35 MSS_SPIA_CFG Register (Offset = 88h) [reset = X]

MSS_SPIA_CFG is shown in Figure 6-950 and described in Table 6-957.

Return to the Summary Table.

Figure 6-950. MSS_SPIA_CFG Register

31	30	29	28	27	26	25	24
RESERVED							spia_int_trig_polarity
R/W-X							R/W-0h
23	22	21	20	19	18	17	16
RESERVED							spia_trig_gate_en
R/W-X							R/W-0h

Copyright © 2025 Texas Instruments Incorporated

Figure 6-950. MSS_SPIA_CFG Register (continued)

15	14	13	12	11	10	9	8
RESERVED							spia_cs_trigsrc_en
R/W-X							R/W-0h
7	6	5	4	3	2	1	0
RESERVED						spiasync2sen	
R/W-X						R/W-0h	

Table 6-957. MSS_SPIA_CFG Register Field Descriptions

Bit	Field	Type	Reset	Description
31-25	RESERVED	R/W	X	
24	spia_int_trig_polarity	R/W	0h	SPIA trigger source polarity select. 0 - Polarity 0, 1 -Polarity 1
23-17	RESERVED	R/W	X	
16	spia_trig_gate_en	R/W	0h	When set the TRIGGER s are un-gated only when chip-select is active
15-9	RESERVED	R/W	X	
8	spia_cs_trigsrc_en	R/W	0h	MIBSPIB CS Trigger SRC enable 1 : Use CS as trigger source
7-3	RESERVED	R/W	X	
2-0	spiasync2sen	R/W	0h	Donot touch the field. Used as Tie-off for IP-config.

6.2.7.36 MSS_SPIB_CFG Register (Offset = 8Ch) [reset = X]

MSS_SPIB_CFG is shown in Figure 6-951 and described in Table 6-958.

Return to the Summary Table.

Figure 6-951. MSS_SPIB_CFG Register

31	30	29	28	27	26	25	24
RESERVED							spib_int_trig_polarity
R/W-X							R/W-0h
23	22	21	20	19	18	17	16
RESERVED							spib_trig_gate_en
R/W-X							R/W-0h
15	14	13	12	11	10	9	8
RESERVED							spib_cs_trigsrc_en
R/W-X							R/W-0h
7	6	5	4	3	2	1	0
RESERVED						spibsync2sen	
R/W-X						R/W-0h	

Table 6-958. MSS_SPIB_CFG Register Field Descriptions

Bit	Field	Type	Reset	Description
31-25	RESERVED	R/W	X	
24	spib_int_trig_polarity	R/W	0h	SPIB trigger source polarity select. 0 - Polarity 0, 1 -Polarity 1
23-17	RESERVED	R/W	X	

Copyright © 2025 Texas Instruments Incorporated

Table 6-958. MSS_SPIB_CFG Register Field Descriptions (continued)

Bit	Field	Type	Reset	Description
16	spib_trig_gate_en	R/W	0h	When set the TRIGGER s are un-gated only when chip-select is active
15-9	RESERVED	R/W	X	
8	spib_cs_trigsrc_en	R/W	0h	MIBSPIB CS Trigger SRC enable 1 : Use CS as trigger source
7-3	RESERVED	R/W	X	
2-0	spibsync2sen	R/W	0h	Donot touch the field. Used as Tie-off for IP-config.

6.2.7.37 MSS_EPWM_CFG Register (Offset = 90h) [reset = 0F000000h]

MSS_EPWM_CFG is shown in Figure 6-952 and described in Table 6-959.

Return to the Summary Table.

Figure 6-952. MSS_EPWM_CFG Register

31	30	29	28	27	26	25	24	23	22	21	20	19	18	17	16	15	14	13	12	11	10	9	8	7	6	5	4	3	2	1	0
epwm_config																															
R/W-0F000000h																															

Table 6-959. MSS_EPWM_CFG Register Field Descriptions

Bit	Field	Type	Reset	Description
31-0	epwm_config	R/W	0F000000h	bit0: SW syncin for EPWM1 bit1: SW syncin for EPWM2 bit2: SW syncin for EPWM3 bit8:9 : select bits for EPWM1 '0' : external syncin '1' : reserved '2' : sw syncin '3' : reserved bit10:11 : select bits for EPWM2 '0' : external syncin '1' : chained from EPWM1 '2' : sw syncin '3' : reserved bit12:13 : select bits for EPWM3 '0' : external syncin '1' : chained from EPWM2 '2' : sw syncin '3' : reserved bit24:TBCLKEN for EPWM1 bit25:TBCLKEN for EPWM2 bit26:TBCLKEN for EPWM3

6.2.7.38 MSS_GIO_CFG Register (Offset = 94h) [reset = 0h]

MSS_GIO_CFG is shown in Figure 6-953 and described in Table 6-960.

Return to the Summary Table.

Figure 6-953. MSS_GIO_CFG Register

31	30	29	28	27	26	25	24	23	22	21	20	19	18	17	16	15	14	13	12	11	10	9	8	7	6	5	4	3	2	1	0
gio_config																															
R/W-0h																															

Table 6-960. MSS_GIO_CFG Register Field Descriptions

Bit	Field	Type	Reset	Description
31-0	gio_config	R/W	0h	bit0 : writing '1' will slect negedge for pulse generation of GIO_PAD_INT0 to IRQ bit1 : writing '1' will slect negedge for pulse generation of GIO_PAD_INT1to IRQ bit2: writing '1' will slect negedge for pulse generation of GIO_PAD_INT2 to IRQ bit3 : writing '1' will slect negedge for pulse generation of GIO_PAD_INT3 to IRQ bit4 : writing '1' will slect negedge for pulse generation of GIO_PAD_INT4 to IRQ bit5 : writing '1' will slect negedge for pulse generation of GIO_PAD_INT5 to IRQ bit6 : writing '1' will slect negedge for pulse generation of GIO_PAD_INT6 to IRQ bit7 : writing '1' will slect negedge for pulse generation of GIO_PAD_INT7 to IRQ

Copyright © 2025 Texas Instruments Incorporated

6.2.7.39 MSS_MCAN_FE_SELECT Register (Offset = 98h) [reset = X]

MSS_MCAN_FE_SELECT is shown in Figure 6-954 and described in Table 6-961.

Return to the Summary Table.

Figure 6-954. MSS_MCAN_FE_SELECT Register

31	30	29	28	27	26	25	24
RESERVED							
R/W-X							
23	22	21	20	19	18	17	16
RESERVED					mcanb_fe_select		
R/W-X					R/W-0h		
15	14	13	12	11	10	9	8
RESERVED							
R/W-X							
7	6	5	4	3	2	1	0
RESERVED					mcana_fe_select		
R/W-X					R/W-0h		

Table 6-961. MSS_MCAN_FE_SELECT Register Field Descriptions

Bit	Field	Type	Reset	Description
31-19	RESERVED	R/W	X	
18-16	mcanb_fe_select	R/W	0h	writing a value'N' would select Nth filter interrupt combination for hwa_cm4 interrupt and also HW_SYNC_IN Example: writing 3'd<1-7> selects MSS_MCANB_FE_INT<1-7> respectively
15-3	RESERVED	R/W	X	
2-0	mcana_fe_select	R/W	0h	writing a value'N' would select Nth filter interrupt combination for hwa_cm4 interrupt and also HW_SYNC_IN Example: writing 3'd<1-7> would select MSS_MCANA_FE_INT<1-7> respectively

6.2.7.40 HW_SPARE_REG1 Register (Offset = 9Ch) [reset = 0h]

HW_SPARE_REG1 is shown in Figure 6-955 and described in Table 6-962.

Return to the Summary Table.

Figure 6-955. HW_SPARE_REG1 Register

31	30	29	28	27	26	25	24	23	22	21	20	19	18	17	16	15	14	13	12	11	10	9	8	7	6	5	4	3	2	1	0
NU																															
R/W-0h																															

Table 6-962. HW_SPARE_REG1 Register Field Descriptions

Bit	Field	Type	Reset	Description
31-0	NU	R/W	0h	Resereved for R&D

6.2.7.41 MSS_MCANA_INT_CLR Register (Offset = A0h) [reset = 0h]

MSS_MCANA_INT_CLR is shown in Figure 6-956 and described in Table 6-963.

Return to the Summary Table.

Copyright © 2025 Texas Instruments Incorporated

Figure 6-956. MSS_MCANA_INT_CLR Register

31	30	29	28	27	26	25	24	23	22	21	20	19	18	17	16	15	14	13	12	11	10	9	8	7	6	5	4	3	2	1	0
mcan_int_clr																															
R/W-0h																															

Table 6-963. MSS_MCANA_INT_CLR Register Field Descriptions

Bit	Field	Type	Reset	Description
31-0	mcan_int_clr	R/W	0h	Interrupt Clear for 32 MCANSS TX DMA interrupts. Writing 1'b1 to bit<0-31> clears interrupt source <0-31> respectively in MCANA

6.2.7.42 MSS_MCANA_INT_MASK Register (Offset = A4h) [reset = 0h]

MSS_MCANA_INT_MASK is shown in Figure 6-957 and described in Table 6-964.

Return to the Summary Table.

Figure 6-957. MSS_MCANA_INT_MASK Register

31	30	29	28	27	26	25	24	23	22	21	20	19	18	17	16	15	14	13	12	11	10	9	8	7	6	5	4	3	2	1	0
mcan_int_mask																															
R/W-0h																															

Table 6-964. MSS_MCANA_INT_MASK Register Field Descriptions

Bit	Field	Type	Reset	Description
31-0	mcan_int_mask	R/W	0h	Interrupt Mask for 32 MCANSS TX DMA interrupts. Writing 1'b1 to bit<0-31> masks interrupt source <0-31> respectively in MCANA

6.2.7.43 MSS_MCANA_INT_STAT Register (Offset = A8h) [reset = 0h]

MSS_MCANA_INT_STAT is shown in Figure 6-958 and described in Table 6-965.

Return to the Summary Table.

Figure 6-958. MSS_MCANA_INT_STAT Register

31	30	29	28	27	26	25	24	23	22	21	20	19	18	17	16	15	14	13	12	11	10	9	8	7	6	5	4	3	2	1	0
mcan_int_status																															
R-0h																															

Table 6-965. MSS_MCANA_INT_STAT Register Field Descriptions

Bit	Field	Type	Reset	Description
31-0	mcan_int_status	R	0h	Interrupt status for 32 MCANSS TX DMA interrupts. 1'b1 in bit<0-31> gives pending status for interrupt <0-31> respectively in MCANA

6.2.7.44 HW_SPARE_REG2 Register (Offset = ACh) [reset = 0h]

HW_SPARE_REG2 is shown in Figure 6-959 and described in Table 6-966.

Return to the Summary Table.

Figure 6-959. HW_SPARE_REG2 Register

31	30	29	28	27	26	25	24	23	22	21	20	19	18	17	16	15	14	13	12	11	10	9	8	7	6	5	4	3	2	1	0
NU																															
R/W-0h																															

Copyright © 2025 Texas Instruments Incorporated

Table 6-966. HW_SPARE_REG2 Register Field Descriptions

Bit	Field	Type	Reset	Description
31-0	NU	R/W	0h	Resereved for R&D

6.2.7.45 CCC_ERR_STATUS Register (Offset = B0h) [reset = X]

CCC_ERR_STATUS is shown in Figure 6-960 and described in Table 6-967.

Return to the Summary Table.

Figure 6-960. CCC_ERR_STATUS Register

31	30	29	28	27	26	25	24	23	22	21	20	19	18	17	16
RESERVED								cccb_errot_status							
R-X								R-0h							
15	14	13	12	11	10	9	8	7	6	5	4	3	2	1	0
RESERVED								ccca_errot_status							
R-X								R-0h							

Table 6-967. CCC_ERR_STATUS Register Field Descriptions

Bit	Field	Type	Reset	Description
31-24	RESERVED	R	X	
23-16	cccb_errot_status	R	0h	CCCB Error Status (for Debug) {3'd0, counter_error, counter_done, timeout_error, counter_error, counter_done}
15-8	RESERVED	R	X	
7-0	ccca_errot_status	R	0h	CCCA Error Status (for Debug) {3'd0, counter_error, counter_done, timeout_error, counter_error, counter_done}

6.2.7.46 CCCA_CFG0 Register (Offset = B4h) [reset = 0h]

CCCA_CFG0 is shown in Figure 6-961 and described in Table 6-968.

Return to the Summary Table.

Figure 6-961. CCCA_CFG0 Register

31	30	29	28	27	26	25	24
ccca_margin_count							
R/W-0h							
23	22	21	20	19	18	17	16
ccca_margin_count							
R/W-0h							
15	14	13	12	11	10	9	8
RESERVED							ccca_single_shot_mode
R/W-0h							R/W-0h
7	6	5	4	3	2	1	0
ccca_enable_module	ccca_disable_clocks	ccca_clk1_sel			ccca_clk0_sel		
R/W-0h	R/W-0h	R/W-0h			R/W-0h		

Copyright © 2025 Texas Instruments Incorporated

Table 6-968. CCCA_CFG0 Register Field Descriptions

Bit	Field	Type	Reset	Description
31-16	ccca_margin_count	R/W	0h	Margin value for clock comparison in terms of counter1 clock.CCC error will not be generated if counter1 counter value is within count1_expected_val +/- MARGIN_COUNT
15-9	RESERVED	R/W	0h	Not used
8	ccca_single_shot_mode	R/W	0h	1: Single shot mode 0: Continuous mode
7	ccca_enable_module	R/W	0h	1'b1: Enables CCCA 1'b0: Disables CCCA
6	ccca_disable_clocks	R/W	0h	1: Clock gated to counter0 and counter1 0: Normal mode
5-3	ccca_clk1_sel	R/W	0h	Selection for Clock 1 0: Select clock0_src0 as source for counter1 1: Select clock0_src1 as source for counter1 2: Select clock0_src2 as source for counter1 ... 7: Select clock0_src7 as source for counter1
2-0	ccca_clk0_sel	R/W	0h	Selection for Clock 0 0: Select clock0_src0 as source for counter0 1: Select clock0_src1 as source for counter0 2: Select clock0_src2 as source for counter0 ... 7: Select clock0_src7 as source for counter0

6.2.7.47 CCCA_CFG1 Register (Offset = B8h) [reset = 0h]

CCCA_CFG1 is shown in Figure 6-962 and described in Table 6-969.

Return to the Summary Table.

Figure 6-962. CCCA_CFG1 Register

31	30	29	28	27	26	25	24	23	22	21	20	19	18	17	16	15	14	13	12	11	10	9	8	7	6	5	4	3	2	1	0
ccca_cfg																															
R/W-0h																															

Table 6-969. CCCA_CFG1 Register Field Descriptions

Bit	Field	Type	Reset	Description
31-0	ccca_cfg	R/W	0h	count0_expiry_val Counter 1 is compared for count1_expected_val +/- MARGIN_COUNT when counter0 expires after counting down from count0_expiry_val to 0

6.2.7.48 CCCA_CFG2 Register (Offset = BCh) [reset = 0h]

CCCA_CFG2 is shown in Figure 6-963 and described in Table 6-970.

Return to the Summary Table.

Figure 6-963. CCCA_CFG2 Register

31	30	29	28	27	26	25	24	23	22	21	20	19	18	17	16	15	14	13	12	11	10	9	8	7	6	5	4	3	2	1	0
ccca_cfg																															
R/W-0h																															

Table 6-970. CCCA_CFG2 Register Field Descriptions

Bit	Field	Type	Reset	Description
31-0	ccca_cfg	R/W	0h	count1_expected_val Expected value of counter 1 when counter 0 expires after counting down from count0_expiry value

6.2.7.49 CCCA_CFG3 Register (Offset = C0h) [reset = 0h]

CCCA_CFG3 is shown in Figure 6-964 and described in Table 6-971.

Return to the Summary Table.

Copyright © 2025 Texas Instruments Incorporated

Figure 6-964. CCCA_CFG3 Register

31	30	29	28	27	26	25	24	23	22	21	20	19	18	17	16	15	14	13	12	11	10	9	8	7	6	5	4	3	2	1	0
ccca_cfg																															
R/W-0h																															

Table 6-971. CCCA_CFG3 Register Field Descriptions

Bit	Field	Type	Reset	Description
31-0	ccca_cfg	R/W	0h	Timeout Error Counter value in counter1 clock

6.2.7.50 CCCA_CNTVAL Register (Offset = C4h) [reset = 0h]

CCCA_CNTVAL is shown in Figure 6-965 and described in Table 6-972.

Return to the Summary Table.

Figure 6-965. CCCA_CNTVAL Register

31	30	29	28	27	26	25	24	23	22	21	20	19	18	17	16	15	14	13	12	11	10	9	8	7	6	5	4	3	2	1	0
ccca_cfg																															
R-0h																															

Table 6-972. CCCA_CNTVAL Register Field Descriptions

Bit	Field	Type	Reset	Description
31-0	ccca_cfg	R	0h	count1_val_out Real time value of counter1

6.2.7.51 CCCB_CFG0 Register (Offset = C8h) [reset = 0h]

CCCB_CFG0 is shown in Figure 6-966 and described in Table 6-973.

Return to the Summary Table.

Figure 6-966. CCCB_CFG0 Register

31	30	29	28	27	26	25	24
cccb_margin_count							
R/W-0h							
23	22	21	20	19	18	17	16
cccb_margin_count							
R/W-0h							
15	14	13	12	11	10	9	8
RESERVED							cccb_single_shot_mode
R/W-0h							R/W-0h
7	6	5	4	3	2	1	0
cccb_enable_module	cccb_disable_clocks	CCCB_clk1_sel			CCCB_clk0_sel		
R/W-0h	R/W-0h	R/W-0h			R/W-0h		

Table 6-973. CCCB_CFG0 Register Field Descriptions

Bit	Field	Type	Reset	Description
31-16	cccb_margin_count	R/W	0h	Margin value for clock comparison in terms of counter1 clock.CCC error will not be generated if counter1 counter value is within count1_expected_val +/- MARGIN_COUNT

Copyright © 2025 Texas Instruments Incorporated

Table 6-973. CCCB_CFG0 Register Field Descriptions (continued)

Bit	Field	Type	Reset	Description
15-9	RESERVED	R/W	0h	Not used
8	cccb_single_shot_mode	R/W	0h	1: Single shot mode 0: Continuous mode
7	cccb_enable_module	R/W	0h	1'b1: Enables CCCB 1'b0: Disables CCCB
6	cccb_disable_clocks	R/W	0h	1: Clock gated to counter0 and counter1 0: Normal mode
5-3	CCCB_clk1_sel	R/W	0h	Selection for Clock 1 0: Select clock0_src0 as source for counter1 1: Select clock0_src1 as source for counter1 2: Select clock0_src2 as source for counter1 ... 7: Select clock0_src7 as source for counter1
2-0	CCCB_clk0_sel	R/W	0h	Selection for Clock 0 0: Select clock0_src0 as source for counter0 1: Select clock0_src1 as source for counter0 2: Select clock0_src2 as source for counter0 ... 7: Select clock0_src7 as source for counter0

6.2.7.52 CCCB_CFG1 Register (Offset = CCh) [reset = 0h]

CCCB_CFG1 is shown in Figure 6-967 and described in Table 6-974.

Return to the Summary Table.

Figure 6-967. CCCB_CFG1 Register

31	30	29	28	27	26	25	24	23	22	21	20	19	18	17	16	15	14	13	12	11	10	9	8	7	6	5	4	3	2	1	0
cccb_cfg																															
R/W-0h																															

Table 6-974. CCCB_CFG1 Register Field Descriptions

Bit	Field	Type	Reset	Description
31-0	cccb_cfg	R/W	0h	count0_expiry_val Counter 1 is compared for count1_expected_val +/- MARGIN_COUNT when counter0 expires after counting down from count0_expiry_val to 0

6.2.7.53 CCCB_CFG2 Register (Offset = D0h) [reset = 0h]

CCCB_CFG2 is shown in Figure 6-968 and described in Table 6-975.

Return to the Summary Table.

Figure 6-968. CCCB_CFG2 Register

31	30	29	28	27	26	25	24	23	22	21	20	19	18	17	16	15	14	13	12	11	10	9	8	7	6	5	4	3	2	1	0
cccb_cfg																															
R/W-0h																															

Table 6-975. CCCB_CFG2 Register Field Descriptions

Bit	Field	Type	Reset	Description
31-0	cccb_cfg	R/W	0h	count1_expected_val Expected value of counter 1 when counter 0 expires after counting down from count0_expiry value

6.2.7.54 CCCB_CFG3 Register (Offset = D4h) [reset = 0h]

CCCB_CFG3 is shown in Figure 6-969 and described in Table 6-976.

Return to the Summary Table.

Figure 6-969. CCCB_CFG3 Register

31	30	29	28	27	26	25	24	23	22	21	20	19	18	17	16	15	14	13	12	11	10	9	8	7	6	5	4	3	2	1	0

Copyright © 2025 Texas Instruments Incorporated

Figure 6-969. CCCB_CFG3 Register (continued)

cccb_cfg
R/W-0h

Table 6-976. CCCB_CFG3 Register Field Descriptions

Bit	Field	Type	Reset	Description
31-0	cccb_cfg	R/W	0h	Timeout Error Counter value in counter1 clock

6.2.7.55 CCCB_CNTVAL Register (Offset = D8h) [reset = 0h]

CCCB_CNTVAL is shown in Figure 6-970 and described in Table 6-977.

Return to the Summary Table.

Figure 6-970. CCCB_CNTVAL Register

31	30	29	28	27	26	25	24	23	22	21	20	19	18	17	16	15	14	13	12	11	10	9	8	7	6	5	4	3	2	1	0
cccb_cfg																															
R-0h																															

Table 6-977. CCCB_CNTVAL Register Field Descriptions

Bit	Field	Type	Reset	Description
31-0	cccb_cfg	R	0h	count1_val_out Real time value of counter1

6.2.7.56 CCC_DCC_COMMON Register (Offset = DCh) [reset = X]

CCC_DCC_COMMON is shown in Figure 6-971 and described in Table 6-978.

Return to the Summary Table.

Figure 6-971. CCC_DCC_COMMON Register

31	30	29	28	27	26	25	24
RESERVED							
R/W-X							
23	22	21	20	19	18	17	16
RESERVED							
R/W-X							
15	14	13	12	11	10	9	8
RESERVED			enable_cccb_err_nmi	RESERVED			enable_cccb_err_rstn
R/W-X			R/W-0h	R/W-X			R/W-0h
7	6	5	4	3	2	1	0
RESERVED							
R/W-X							

Table 6-978. CCC_DCC_COMMON Register Field Descriptions

Bit	Field	Type	Reset	Description
31-13	RESERVED	R/W	X	
12	enable_cccb_err_nmi	R/W	0h	1'b0:Enable CCCB error to generate NMI. 1'b1:disables CCCB error to generate NMI.
11-9	RESERVED	R/W	X	

Copyright © 2025 Texas Instruments Incorporated

Table 6-978. CCC_DCC_COMMON Register Field Descriptions (continued)

Bit	Field	Type	Reset	Description
8	enable_cccb_err_rstn	R/W	0h	1'b0: Enable CCCB error to generate WD restn. 1'b1: disables CCCB error to generate WD restn.
7-0	RESERVED	R/W	X	

6.2.7.57 R5_GLOBAL_CONFIG Register (Offset = E0h) [reset = X]

R5_GLOBAL_CONFIG is shown in Figure 6-972 and described in Table 6-979.

Return to the Summary Table.

Figure 6-972. R5_GLOBAL_CONFIG Register

31	30	29	28	27	26	25	24
RESERVED							
R/W-X							
23	22	21	20	19	18	17	16
RESERVED							
R/W-X							
15	14	13	12	11	10	9	8
RESERVED							
R/W-X							
7	6	5	4	3	2	1	0
RESERVED							teinit
R/W-X							R/W-0h

Table 6-979. R5_GLOBAL_CONFIG Register Field Descriptions

Bit	Field	Type	Reset	Description
31-1	RESERVED	R/W	X	
0	teinit	R/W	0h	Exception handling state at reset. 0-ARM 1-Thumb

6.2.7.58 R5_AHB_EN Register (Offset = E4h) [reset = X]

R5_AHB_EN is shown in Figure 6-973 and described in Table 6-980.

Return to the Summary Table.

Figure 6-973. R5_AHB_EN Register

31	30	29	28	27	26	25	24
RESERVED							
R/W-X							
23	22	21	20	19	18	17	16
RESERVED						cpu1_ahb_init	
R/W-X						R/W-7h	
15	14	13	12	11	10	9	8
RESERVED							
R/W-X							
7	6	5	4	3	2	1	0
RESERVED						cpu0_ahb_init	

Copyright © 2025 Texas Instruments Incorporated

Figure 6-973. R5_AHB_EN Register (continued)

R/W-X	R/W-7h

Table 6-980. R5_AHB_EN Register Field Descriptions

Bit	Field	Type	Reset	Description
31-19	RESERVED	R/W	X	
18-16	cpu1_ahb_init	R/W	7h	Ti internal Register. Modifying this register is not recommended Signal decides whehter ahb interface is enabled or not.
15-3	RESERVED	R/W	X	
2-0	cpu0_ahb_init	R/W	7h	Ti internal Register. Modifying this register is not recommended Signal decides whehter ahb interface is enabled or not.

6.2.7.59 R5A_AHB_BASE Register (Offset = E8h) [reset = X]

R5A_AHB_BASE is shown in Figure 6-974 and described in Table 6-981.

Return to the Summary Table.

Figure 6-974. R5A_AHB_BASE Register

31	30	29	28	27	26	25	24	23	22	21	20	19	18	17	16	15	14	13	12	11	10	9	8	7	6	5	4	3	2	1	0
RESERVED												ahb_base																			
R/W-X												R/W-0h																			

Table 6-981. R5A_AHB_BASE Register Field Descriptions

Bit	Field	Type	Reset	Description
31-20	RESERVED	R/W	X	
19-0	ahb_base	R/W	0h	Ti internal Register. Modifying this register is not recommended Decides the base address of ahb region

6.2.7.60 R5A_AHB_SIZE Register (Offset = ECh) [reset = X]

R5A_AHB_SIZE is shown in Figure 6-975 and described in Table 6-982.

Return to the Summary Table.

Figure 6-975. R5A_AHB_SIZE Register

31	30	29	28	27	26	25	24	23	22	21	20	19	18	17	16
RESERVED															
R/W-X															
15	14	13	12	11	10	9	8	7	6	5	4	3	2	1	0
RESERVED											ahb_size				
R/W-X											R/W-12h				

Table 6-982. R5A_AHB_SIZE Register Field Descriptions

Bit	Field	Type	Reset	Description
31-5	RESERVED	R/W	X	
4-0	ahb_size	R/W	12h	Ti internal Register. Modifying this register is not recommended Code for selecting size for ahb. b00011 4KB b00100 8KB b00101 16KB b00110 32KB b00111 64KB b01000 128KB b01001 256KB b01010 512KB b01011 1MB b01100 2MB b01101 4MB b01110 8MB b01111 16MB b10000 32MB b10001 64MB b10010 128MB b10011 256MB b10100 512MB b10101 1GB b10110 2GB b10111 4GB

Copyright © 2025 Texas Instruments Incorporated

6.2.7.61 R5B_AHB_BASE Register (Offset = F0h) [reset = X]

R5B_AHB_BASE is shown in Figure 6-976 and described in Table 6-983.

Return to the Summary Table.

Figure 6-976. R5B_AHB_BASE Register

31	30	29	28	27	26	25	24	23	22	21	20	19	18	17	16	15	14	13	12	11	10	9	8	7	6	5	4	3	2	1	0
RESERVED												ahb_base																			
R/W-X												R/W-0h																			

Table 6-983. R5B_AHB_BASE Register Field Descriptions

Bit	Field	Type	Reset	Description
31-20	RESERVED	R/W	X	
19-0	ahb_base	R/W	0h	Ti internal Register. Modifying this register is not recommended Decides the base address of ahb region

6.2.7.62 R5B_AHB_SIZE Register (Offset = F4h) [reset = X]

R5B_AHB_SIZE is shown in Figure 6-977 and described in Table 6-984.

Return to the Summary Table.

Figure 6-977. R5B_AHB_SIZE Register

31	30	29	28	27	26	25	24	23	22	21	20	19	18	17	16
RESERVED															
R/W-X															
15	14	13	12	11	10	9	8	7	6	5	4	3	2	1	0
RESERVED											ahb_size				
R/W-X											R/W-12h				

Table 6-984. R5B_AHB_SIZE Register Field Descriptions

Bit	Field	Type	Reset	Description
31-5	RESERVED	R/W	X	
4-0	ahb_size	R/W	12h	Ti internal Register. Modifying this register is not recommended Code for selecting size for ahb. b00011 4KB b00100 8KB b00101 16KB b00110 32KB b00111 64KB b01000 128KB b01001 256KB b01010 512KB b01011 1MB b01100 2MB b01101 4MB b01110 8MB b01111 16MB b10000 32MB b10001 64MB b10010 128MB b10011 256MB b10100 512MB b10101 1GB b10110 2GB b10111 4GB

6.2.7.63 R5_TCM_EXT_ERR_EN Register (Offset = F8h) [reset = X]

R5_TCM_EXT_ERR_EN is shown in Figure 6-978 and described in Table 6-985.

Return to the Summary Table.

Figure 6-978. R5_TCM_EXT_ERR_EN Register

31	30	29	28	27	26	25	24	23	22	21	20	19	18	17	16
RESERVED													cpu1_tcm		
R/W-X													R/W-7h		
15	14	13	12	11	10	9	8	7	6	5	4	3	2	1	0
RESERVED													cpu0_tcm		
R/W-X													R/W-7h		

Copyright © 2025 Texas Instruments Incorporated

Figure 6-978. R5_TCM_EXT_ERR_EN Register (continued)

Table 6-985. R5_TCM_EXT_ERR_EN Register Field Descriptions

Bit	Field	Type	Reset	Description
31-19	RESERVED	R/W	X	
18-16	cpu1_tcm	R/W	7h	Ti internal Register. Modifying this register is not recommended TCMs external error enable. Tie each bit high to enable the external error signal for each TCM at reset
15-3	RESERVED	R/W	X	
2-0	cpu0_tcm	R/W	7h	Ti internal Register. Modifying this register is not recommended TCMs external error enable. Tie each bit high to enable the external error signal for each TCM at reset

6.2.7.64 R5_TCM_ERR_EN Register (Offset = FCh) [reset = X]

R5_TCM_ERR_EN is shown in Figure 6-979 and described in Table 6-986.

Return to the Summary Table.

Figure 6-979. R5_TCM_ERR_EN Register

31	30	29	28	27	26	25	24	23	22	21	20	19	18	17	16
RESERVED													cpu1_tcm		
R/W-X													R/W-0h		
15	14	13	12	11	10	9	8	7	6	5	4	3	2	1	0
RESERVED													cpu0_tcm		
R/W-X													R/W-0h		

Table 6-986. R5_TCM_ERR_EN Register Field Descriptions

Bit	Field	Type	Reset	Description
31-19	RESERVED	R/W	X	
18-16	cpu1_tcm	R/W	0h	Ti internal Register. Modifying this register is not recommended TCMs ECC check enable. Tie each bit high to enable ECC checking on appropraite TCM
15-3	RESERVED	R/W	X	
2-0	cpu0_tcm	R/W	0h	Ti internal Register. Modifying this register is not recommended TCMs ECC check enable. Tie each bit high to enable ECC checking on appropraite TCM

6.2.7.65 R5_INIT_TCM Register (Offset = 100h) [reset = X]

R5_INIT_TCM is shown in Figure 6-980 and described in Table 6-987.

Return to the Summary Table.

Figure 6-980. R5_INIT_TCM Register

31	30	29	28	27	26	25	24
RESERVED							
R/W-X							
23	22	21	20	19	18	17	16
RESERVED	lockzram_cpu1			RESERVED	tcmb_cpu1		
R/W-X	R/W-7h			R/W-X	R/W-7h		
15	14	13	12	11	10	9	8

Copyright © 2025 Texas Instruments Incorporated

Figure 6-980. R5_INIT_TCM Register (continued)

RESERVED	tcma_cpu1	RESERVED	lockzram_cpu0
R/W-X	R/W-7h	R/W-X	R/W-7h

7	6	5	4	3	2	1	0
RESERVED	tcmb_cpu0			RESERVED	tcma_cpu0		
R/W-X	R/W-7h			R/W-X	R/W-7h		

Table 6-987. R5_INIT_TCM Register Field Descriptions

Bit	Field	Type	Reset	Description
31-23	RESERVED	R/W	X	
22-20	lockzram_cpu1	R/W	7h	Ti internal Register. Modifying this register is not recommended When HIGH ATCM base address at reset is 0x0 when LOW BTCM base address at reset is 0x0
19	RESERVED	R/W	X	
18-16	tcmb_cpu1	R/W	7h	Ti internal Register. Modifying this register is not recommended When HIGH enables BTCM interface out of reset
15	RESERVED	R/W	X	
14-12	tcma_cpu1	R/W	7h	Ti internal Register. Modifying this register is not recommended When HIGH enables ATCM interface out of reset
11	RESERVED	R/W	X	
10-8	lockzram_cpu0	R/W	7h	Ti internal Register. Modifying this register is not recommended When HIGH ATCM base address at reset is 0x0 when LOW BTCM base address at reset is 0x0
7	RESERVED	R/W	X	
6-4	tcmb_cpu0	R/W	7h	Ti internal Register. Modifying this register is not recommended When HIGH enables BTCM interface out of reset
3	RESERVED	R/W	X	
2-0	tcma_cpu0	R/W	7h	Ti internal Register. Modifying this register is not recommended When HIGH enables ATCM interface out of reset

6.2.7.66 R5_TCM_ECC_WRENZ_EN Register (Offset = 104h) [reset = X]

R5_TCM_ECC_WRENZ_EN is shown in Figure 6-981 and described in Table 6-988.

Return to the Summary Table.

Figure 6-981. R5_TCM_ECC_WRENZ_EN Register

31	30	29	28	27	26	25	24
RESERVED							
R/W-X							

23	22	21	20	19	18	17	16
RESERVED	cpu1_tcmb1_wrenz_en			RESERVED	cpu1_tcmb0_wrenz_en		
R/W-X	R/W-7h			R/W-X	R/W-7h		

15	14	13	12	11	10	9	8
RESERVED	cpu1_tcma_wrenz_en			RESERVED	cpu0_tcmb1_wrenz_en		
R/W-X	R/W-7h			R/W-X	R/W-7h		

7	6	5	4	3	2	1	0
RESERVED	cpu0_tcmb0_wrenz_en			RESERVED	cpu0_tcma_wrenz_en		
R/W-X	R/W-7h			R/W-X	R/W-7h		

Copyright © 2025 Texas Instruments Incorporated

Table 6-988. R5_TCM_ECC_WRENZ_EN Register Field Descriptions

Bit	Field	Type	Reset	Description
31-23	RESERVED	R/W	X	
22-20	cpu1_tcmb1_wrenz_en	R/W	7h	writing '000' blocks the writes to ECC-bits of TCMB0-RAM of CR5B. Writing '111' unblocks the writes to ECC-bits of TCMB1-RAM of CR5B
19	RESERVED	R/W	X	
18-16	cpu1_tcmb0_wrenz_en	R/W	7h	writing '000' blocks the writes to ECC-bits of TCMB0-RAM of CR5B. Writing '111' unblocks the writes to ECC-bits of TCMB0-RAM of CR5B
15	RESERVED	R/W	X	
14-12	cpu1_tcma_wrenz_en	R/W	7h	writing '000' blocks the writes to ECC-bits of TCMA-RAM of CR5B. Writing '111' unblocks the writes to ECC-bits of TCMA-RAM of CR5B
11	RESERVED	R/W	X	
10-8	cpu0_tcmb1_wrenz_en	R/W	7h	writing '000' blocks the writes to ECC-bits of TCMB0-RAM of CR5A. Writing '111' unblocks the writes to ECC-bits of TCMB1-RAM of CR5A
7	RESERVED	R/W	X	
6-4	cpu0_tcmb0_wrenz_en	R/W	7h	writing '000' blocks the writes to ECC-bits of TCMB0-RAM of CR5A. Writing '111' unblocks the writes to ECC-bits of TCMB0-RAM of CR5A
3	RESERVED	R/W	X	
2-0	cpu0_tcma_wrenz_en	R/W	7h	writing '000' blocks the writes to ECC-bits of TCMA-RAM of CR5A. Writing '111' unblocks the writes to ECC-bits of TCMA-RAM of CR5A

6.2.7.67 ESM_GATING0 Register (Offset = 108h) [reset = FFFFFFFFh]

ESM_GATING0 is shown in Figure 6-982 and described in Table 6-989.

Return to the Summary Table.

Figure 6-982. ESM_GATING0 Register

31	30	29	28	27	26	25	24	23	22	21	20	19	18	17	16	15	14	13	12	11	10	9	8	7	6	5	4	3	2	1	0
esm_gating																															
R/W-FFFFFFFFh																															

Table 6-989. ESM_GATING0 Register Field Descriptions

Bit	Field	Type	Reset	Description
31-0	esm_gating	R/W	FFFFFFFFh	bit3:0 : writing '000' will ungate the ESM_GRP2_ERROR_0 bit7:4 : writing '000' will ungate the ESM_GRP2_ERROR_1 bit31:28 : writing '000' will ungate the ESM_GRP2_ERROR_7

6.2.7.68 ESM_GATING1 Register (Offset = 10Ch) [reset = FFFFFFFFh]

ESM_GATING1 is shown in Figure 6-983 and described in Table 6-990.

Return to the Summary Table.

Figure 6-983. ESM_GATING1 Register

31	30	29	28	27	26	25	24	23	22	21	20	19	18	17	16	15	14	13	12	11	10	9	8	7	6	5	4	3	2	1	0
esm_gating																															
R/W-FFFFFFFFh																															

Copyright © 2025 Texas Instruments Incorporated

Table 6-990. ESM_GATING1 Register Field Descriptions

Bit	Field	Type	Reset	Description
31-0	esm_gating	R/W	FFFFFFFFh	bit3:0 : writing '000' will ungate the ESM_GRP2_ERROR_8 bit7:4 : writing '000' will ungate the ESM_GRP2_ERROR_9 bit31:28 : writing '000' will ungate the ESM_GRP2_ERROR_15

6.2.7.69 ESM_GATING2 Register (Offset = 110h) [reset = FFFFFFFFh]

ESM_GATING2 is shown in Figure 6-984 and described in Table 6-991.

Return to the Summary Table.

Figure 6-984. ESM_GATING2 Register

31	30	29	28	27	26	25	24	23	22	21	20	19	18	17	16	15	14	13	12	11	10	9	8	7	6	5	4	3	2	1	0
esm_gating																															
R/W-FFFFFFFFh																															

Table 6-991. ESM_GATING2 Register Field Descriptions

Bit	Field	Type	Reset	Description
31-0	esm_gating	R/W	FFFFFFFFh	bit3:0 : writing '000' will ungate the ESM_GRP2_ERROR_16 bit7:4 : writing '000' will ungate the ESM_GRP2_ERROR_17 bit31:28 : writing '000' will ungate the ESM_GRP2_ERROR_23

6.2.7.70 ESM_GATING3 Register (Offset = 114h) [reset = FFFFFFFFh]

ESM_GATING3 is shown in Figure 6-985 and described in Table 6-992.

Return to the Summary Table.

Figure 6-985. ESM_GATING3 Register

31	30	29	28	27	26	25	24	23	22	21	20	19	18	17	16	15	14	13	12	11	10	9	8	7	6	5	4	3	2	1	0
esm_gating																															
R/W-FFFFFFFFh																															

Table 6-992. ESM_GATING3 Register Field Descriptions

Bit	Field	Type	Reset	Description
31-0	esm_gating	R/W	FFFFFFFFh	bit3:0 : writing '000' will ungate the ESM_GRP2_ERROR_24 bit7:4 : writing '000' will ungate the ESM_GRP2_ERROR_25 bit31:28 : writing '000' will ungate the ESM_GRP2_ERROR_31

6.2.7.71 ESM_GATING4 Register (Offset = 118h) [reset = FFFFFFFFh]

ESM_GATING4 is shown in Figure 6-986 and described in Table 6-993.

Return to the Summary Table.

Figure 6-986. ESM_GATING4 Register

31	30	29	28	27	26	25	24	23	22	21	20	19	18	17	16	15	14	13	12	11	10	9	8	7	6	5	4	3	2	1	0
esm_gating																															
R/W-FFFFFFFFh																															

Copyright © 2025 Texas Instruments Incorporated

Table 6-993. ESM_GATING4 Register Field Descriptions

Bit	Field	Type	Reset	Description
31-0	esm_gating	R/W	FFFFFFFFh	bit3:0 : writing '000' will ungate the ESM_GRP3_ERROR_0 bit7:4 : writing '000' will ungate the ESM_GRP3_ERROR_1 bit31:28 : writing '000' will ungate the ESM_GRP3_ERROR_7

6.2.7.72 ESM_GATING5 Register (Offset = 11Ch) [reset = FFFFFFFFh]

ESM_GATING5 is shown in Figure 6-987 and described in Table 6-994.

Return to the Summary Table.

Figure 6-987. ESM_GATING5 Register

31	30	29	28	27	26	25	24	23	22	21	20	19	18	17	16	15	14	13	12	11	10	9	8	7	6	5	4	3	2	1	0
esm_gating																															
R/W-FFFFFFFFh																															

Table 6-994. ESM_GATING5 Register Field Descriptions

Bit	Field	Type	Reset	Description
31-0	esm_gating	R/W	FFFFFFFFh	bit3:0 : writing '000' will ungate the ESM_GRP3_ERROR_8 bit7:4 : writing '000' will ungate the ESM_GRP3_ERROR_9 bit31:28 : writing '000' will ungate the ESM_GRP3_ERROR_15

6.2.7.73 ESM_GATING6 Register (Offset = 120h) [reset = FFFFFFFFh]

ESM_GATING6 is shown in Figure 6-988 and described in Table 6-995.

Return to the Summary Table.

Figure 6-988. ESM_GATING6 Register

31	30	29	28	27	26	25	24	23	22	21	20	19	18	17	16	15	14	13	12	11	10	9	8	7	6	5	4	3	2	1	0
esm_gating																															
R/W-FFFFFFFFh																															

Table 6-995. ESM_GATING6 Register Field Descriptions

Bit	Field	Type	Reset	Description
31-0	esm_gating	R/W	FFFFFFFFh	bit3:0 : writing '000' will ungate the ESM_GRP3_ERROR_16 bit7:4 : writing '000' will ungate the ESM_GRP3_ERROR_17 bit31:28 : writing '000' will ungate the ESM_GRP3_ERROR_23

6.2.7.74 ESM_GATING7 Register (Offset = 124h) [reset = FFFFFFFFh]

ESM_GATING7 is shown in Figure 6-989 and described in Table 6-996.

Return to the Summary Table.

Figure 6-989. ESM_GATING7 Register

31	30	29	28	27	26	25	24	23	22	21	20	19	18	17	16	15	14	13	12	11	10	9	8	7	6	5	4	3	2	1	0
esm_gating																															
R/W-FFFFFFFFh																															

Copyright © 2025 Texas Instruments Incorporated

Table 6-996. ESM_GATING7 Register Field Descriptions

Bit	Field	Type	Reset	Description
31-0	esm_gating	R/W	FFFFFFFFh	bit3:0 : writing '000' will ungate the ESM_GRP3_ERROR_24 bit7:4 : writing '000' will ungate the ESM_GRP3_ERROR_25 bit31:28 : writing '000' will ungate the ESM_GRP3_ERROR_31

6.2.7.75 ERR_PARITY_ATCM0 Register (Offset = 128h) [reset = X]

ERR_PARITY_ATCM0 is shown in Figure 6-990 and described in Table 6-997.

Return to the Summary Table.

Figure 6-990. ERR_PARITY_ATCM0 Register

31	30	29	28	27	26	25	24	23	22	21	20	19	18	17	16	15	14	13	12	11	10	9	8	7	6	5	4	3	2	1	0
RESERVED												addr																			
R-X												R-0h																			

Table 6-997. ERR_PARITY_ATCM0 Register Field Descriptions

Bit	Field	Type	Reset	Description
31-20	RESERVED	R	X	
19-0	addr	R	0h	Address lathched when parity error is occurred for ATCM of CR5A

6.2.7.76 ERR_PARITY_ATCM1 Register (Offset = 12Ch) [reset = X]

ERR_PARITY_ATCM1 is shown in Figure 6-991 and described in Table 6-998.

Return to the Summary Table.

Figure 6-991. ERR_PARITY_ATCM1 Register

31	30	29	28	27	26	25	24	23	22	21	20	19	18	17	16	15	14	13	12	11	10	9	8	7	6	5	4	3	2	1	0
RESERVED												addr																			
R-X												R-0h																			

Table 6-998. ERR_PARITY_ATCM1 Register Field Descriptions

Bit	Field	Type	Reset	Description
31-20	RESERVED	R	X	
19-0	addr	R	0h	Address lathched when parity error is occurred for ATCM of CR5B

6.2.7.77 ERR_PARITY_B0TCM0 Register (Offset = 130h) [reset = X]

ERR_PARITY_B0TCM0 is shown in Figure 6-992 and described in Table 6-999.

Return to the Summary Table.

Figure 6-992. ERR_PARITY_B0TCM0 Register

31	30	29	28	27	26	25	24	23	22	21	20	19	18	17	16	15	14	13	12	11	10	9	8	7	6	5	4	3	2	1	0
RESERVED												addr																			
R-X												R-0h																			

Table 6-999. ERR_PARITY_B0TCM0 Register Field Descriptions

Bit	Field	Type	Reset	Description
31-20	RESERVED	R	X	

Copyright © 2025 Texas Instruments Incorporated

Table 6-999. ERR_PARITY_B0TCM0 Register Field Descriptions (continued)

Bit	Field	Type	Reset	Description
19-0	addr	R	0h	Address lathched when parity error is occurred for B0TCM of CR5A

6.2.7.78 ERR_PARITY_B0TCM1 Register (Offset = 134h) [reset = X]

ERR_PARITY_B0TCM1 is shown in Figure 6-993 and described in Table 6-1000.

Return to the Summary Table.

Figure 6-993. ERR_PARITY_B0TCM1 Register

31	30	29	28	27	26	25	24	23	22	21	20	19	18	17	16	15	14	13	12	11	10	9	8	7	6	5	4	3	2	1	0
RESERVED												addr																			
R-X												R-0h																			

Table 6-1000. ERR_PARITY_B0TCM1 Register Field Descriptions

Bit	Field	Type	Reset	Description
31-20	RESERVED	R	X	
19-0	addr	R	0h	Address lathched when parity error is occurred for B0TCM of CR5B

6.2.7.79 ERR_PARITY_B1TCM0 Register (Offset = 138h) [reset = X]

ERR_PARITY_B1TCM0 is shown in Figure 6-994 and described in Table 6-1001.

Return to the Summary Table.

Figure 6-994. ERR_PARITY_B1TCM0 Register

31	30	29	28	27	26	25	24	23	22	21	20	19	18	17	16	15	14	13	12	11	10	9	8	7	6	5	4	3	2	1	0
RESERVED												addr																			
R-X												R-0h																			

Table 6-1001. ERR_PARITY_B1TCM0 Register Field Descriptions

Bit	Field	Type	Reset	Description
31-20	RESERVED	R	X	
19-0	addr	R	0h	Address lathched when parity error is occurred for B1TCM of CR5A

6.2.7.80 ERR_PARITY_B1TCM1 Register (Offset = 13Ch) [reset = X]

ERR_PARITY_B1TCM1 is shown in Figure 6-995 and described in Table 6-1002.

Return to the Summary Table.

Figure 6-995. ERR_PARITY_B1TCM1 Register

31	30	29	28	27	26	25	24	23	22	21	20	19	18	17	16	15	14	13	12	11	10	9	8	7	6	5	4	3	2	1	0
RESERVED												addr																			
R-X												R-0h																			

Table 6-1002. ERR_PARITY_B1TCM1 Register Field Descriptions

Bit	Field	Type	Reset	Description
31-20	RESERVED	R	X	
19-0	addr	R	0h	Address lathched when parity error is occurred for B1TCM of CR5B

Copyright © 2025 Texas Instruments Incorporated

6.2.7.81 TCM_PARITY_CTRL Register (Offset = 140h) [reset = X]

TCM_PARITY_CTRL is shown in Figure 6-996 and described in Table 6-1003.

Return to the Summary Table.

Figure 6-996. TCM_PARITY_CTRL Register

31	30	29	28	27	26	25	24
RESERVED							
R/W-X							
23	22	21	20	19	18	17	16
RESERVED	b1tcm1_erraddr_clr			RESERVED	b1tcm0_erraddr_clr		
R/W-X	R/W-0h			R/W-X	R/W-0h		
15	14	13	12	11	10	9	8
RESERVED	b0cm1_erraddr_clr			RESERVED	b0tcm0_erraddr_clr		
R/W-X	R/W-0h			R/W-X	R/W-0h		
7	6	5	4	3	2	1	0
RESERVED	atcm1_erraddr_clr			RESERVED	atcm0_erraddr_clr		
R/W-X	R/W-0h			R/W-X	R/W-0h		

Table 6-1003. TCM_PARITY_CTRL Register Field Descriptions

Bit	Field	Type	Reset	Description
31-23	RESERVED	R/W	X	
22-20	b1tcm1_erraddr_clr	R/W	0h	Write pulse bit field: writing 3'b111 clears the Address latched after parity error for B1TCM of CR5B
19	RESERVED	R/W	X	
18-16	b1tcm0_erraddr_clr	R/W	0h	Write pulse bit field: writing 3'b111 clears the Address latched after parity error for B1TCM of CR5A
15	RESERVED	R/W	X	
14-12	b0cm1_erraddr_clr	R/W	0h	Write pulse bit field: writing 3'b111 clears the Address latched after parity error for B0TCM of CR5B
11	RESERVED	R/W	X	
10-8	b0tcm0_erraddr_clr	R/W	0h	Write pulse bit field: writing 3'b111 clears the Address latched after parity error for B0TCM of CR5A
7	RESERVED	R/W	X	
6-4	atcm1_erraddr_clr	R/W	0h	Write pulse bit field: writing 3'b111 clears the Address latched after parity error for ATCM of CR5B
3	RESERVED	R/W	X	
2-0	atcm0_erraddr_clr	R/W	0h	Pulse bit-field writing 3'b111 clears the Address latched after parity error for ATCM of CR5A

6.2.7.82 TCM_PARITY_ERRFRC Register (Offset = 144h) [reset = X]

TCM_PARITY_ERRFRC is shown in Figure 6-997 and described in Table 6-1004.

Return to the Summary Table.

Figure 6-997. TCM_PARITY_ERRFRC Register

31	30	29	28	27	26	25	24
RESERVED							
R/W-X							
23	22	21	20	19	18	17	16

Copyright © 2025 Texas Instruments Incorporated

Figure 6-997. TCM_PARITY_ERRFRC Register (continued)

RESERVED	b1tcm1	RESERVED	b1tcm0
R/W-X	R/W-0h	R/W-X	R/W-0h

15	14	13	12	11	10	9	8
RESERVED	b0tcm1			RESERVED	b0tcm0		
R/W-X	R/W-0h			R/W-X	R/W-0h		

7	6	5	4	3	2	1	0
RESERVED	atcm1			RESERVED	atcm0		
R/W-X	R/W-0h			R/W-X	R/W-0h		

Table 6-1004. TCM_PARITY_ERRFRC Register Field Descriptions

Bit	Field	Type	Reset	Description
31-23	RESERVED	R/W	X	
22-20	b1tcm1	R/W	0h	Write pulse bit field: writing 3'b111 forces a parity error for B1TCM of CR5B
19	RESERVED	R/W	X	
18-16	b1tcm0	R/W	0h	Write pulse bit field: writing 3'b111 forces a parity error for B1TCM of CR5A
15	RESERVED	R/W	X	
14-12	b0tcm1	R/W	0h	Write pulse bit field: writing 3'b111 forces a parity error for B0TCM of CR5B
11	RESERVED	R/W	X	
10-8	b0tcm0	R/W	0h	Write pulse bit field: writing 3'b111 forces a parity error for B0TCM of CR5A
7	RESERVED	R/W	X	
6-4	atcm1	R/W	0h	Write pulse bit field: writing 3'b111 forces a parity error for ATCM of CR5B
3	RESERVED	R/W	X	
2-0	atcm0	R/W	0h	Write pulse bit field: writing 3'b111 forces a parity error for ATCM of CR5A

6.2.7.83 HW_SPARE_REG3 Register (Offset = 148h) [reset = 0h]

HW_SPARE_REG3 is shown in Figure 6-998 and described in Table 6-1005.

Return to the Summary Table.

Figure 6-998. HW_SPARE_REG3 Register

31	30	29	28	27	26	25	24	23	22	21	20	19	18	17	16	15	14	13	12	11	10	9	8	7	6	5	4	3	2	1	0
NU																															
R/W-0h																															

Table 6-1005. HW_SPARE_REG3 Register Field Descriptions

Bit	Field	Type	Reset	Description
31-0	NU	R/W	0h	Resereved for R&D

6.2.7.84 SPIA_IO_CFG Register (Offset = 14Ch) [reset = X]

SPIA_IO_CFG is shown in Figure 6-999 and described in Table 6-1006.

Return to the Summary Table.

Copyright © 2025 Texas Instruments Incorporated

Figure 6-999. SPIA_IO_CFG Register

31	30	29	28	27	26	25	24
RESERVED							
R/W-X							
23	22	21	20	19	18	17	16
RESERVED						miso_oen_by_cs	
R/W-X						R/W-0h	
15	14	13	12	11	10	9	8
RESERVED						cs_pol	
R/W-X						R/W-0h	
7	6	5	4	3	2	1	0
RESERVED						cs_deact	
R/W-X						R/W-0h	

Table 6-1006. SPIA_IO_CFG Register Field Descriptions

Bit	Field	Type	Reset	Description
31-19	RESERVED	R/W	X	
18-16	miso_oen_by_cs	R/W	0h	MIBSPIA MISO OE_N Control based on Chip selectCS-applicable in slave mode 1:MISO OEN controlled based on CS.When CS is inactive OE_N=1 0:MISO OEN controlled by IP
15-11	RESERVED	R/W	X	
10-8	cs_pol	R/W	0h	MIBSPIA CS polarity-slave mode 1: Active high 0:Active low
7-3	RESERVED	R/W	X	
2-0	cs_deact	R/W	0h	1 : MIBSPIA External chip select is overridden with the value of MIBSPIA CS polarity-slave mode

6.2.7.85 SPIB_IO_CFG Register (Offset = 150h) [reset = X]

SPIB_IO_CFG is shown in Figure 6-1000 and described in Table 6-1007.

Return to the Summary Table.

Figure 6-1000. SPIB_IO_CFG Register

31	30	29	28	27	26	25	24
RESERVED							
R/W-X							
23	22	21	20	19	18	17	16
RESERVED						miso_oen_by_cs	
R/W-X						R/W-0h	
15	14	13	12	11	10	9	8
RESERVED						cs_pol	
R/W-X						R/W-0h	
7	6	5	4	3	2	1	0
RESERVED						cs_deact	
R/W-X						R/W-0h	

Copyright © 2025 Texas Instruments Incorporated

Table 6-1007. SPIB_IO_CFG Register Field Descriptions

Bit	Field	Type	Reset	Description
31-19	RESERVED	R/W	X	
18-16	miso_oen_by_cs	R/W	0h	MIBSPIB MISO OE_N Control based on Chip selectCS-applicable in slave mode 1:MISO OEN controlled based on CS.When CS is inactive OE_N=1 0:MISO OEN controlled by IP
15-11	RESERVED	R/W	X	
10-8	cs_pol	R/W	0h	MIBSPIB CS polarity-slave mode 1: Active high 0:Active low
7-3	RESERVED	R/W	X	
2-0	cs_deact	R/W	0h	1 : MIBSPIB External chip select is overridden with the value of MIBSPIB CS polarity-slave mode

6.2.7.86 SPI_HOST_IRQ Register (Offset = 154h) [reset = X]

SPI_HOST_IRQ is shown in Figure 6-1001 and described in Table 6-1008.

Return to the Summary Table.

Figure 6-1001. SPI_HOST_IRQ Register

31	30	29	28	27	26	25	24	23	22	21	20	19	18	17	16
RESERVED															
R/W-X															
15	14	13	12	11	10	9	8	7	6	5	4	3	2	1	0
RESERVED														host_irq	
R/W-X														R/W-0h	

Table 6-1008. SPI_HOST_IRQ Register Field Descriptions

Bit	Field	Type	Reset	Description
31-3	RESERVED	R/W	X	
2-0	host_irq	R/W	0h	HOST IRQ

6.2.7.87 TPTC_DBS_CONFIG Register (Offset = 158h) [reset = X]

TPTC_DBS_CONFIG is shown in Figure 6-1002 and described in Table 6-1009.

Return to the Summary Table.

Figure 6-1002. TPTC_DBS_CONFIG Register

31	30	29	28	27	26	25	24
RESERVED							
R/W-X							
23	22	21	20	19	18	17	16
RESERVED							
R/W-X							
15	14	13	12	11	10	9	8
RESERVED						tptc_b0	
R/W-X						R/W-1h	
7	6	5	4	3	2	1	0
RESERVED		tptc_a1		RESERVED		tptc_a0	
R/W-X		R/W-1h		R/W-X		R/W-1h	

Copyright © 2025 Texas Instruments Incorporated

Figure 6-1002. TPTC_DBS_CONFIG Register (continued)

Table 6-1009. TPTC_DBS_CONFIG Register Field Descriptions

Bit	Field	Type	Reset	Description
31-10	RESERVED	R/W	X	
9-8	tptc_b0	R/W	1h	Default burst size tieoff value for TPTC_B0
7-6	RESERVED	R/W	X	
5-4	tptc_a1	R/W	1h	Default burst size tieoff value for TPTC_A1
3-2	RESERVED	R/W	X	
1-0	tptc_a0	R/W	1h	Default burst size tieoff value for TPTC_A0

6.2.7.88 TPCC_PARITY_CTRL Register (Offset = 15Ch) [reset = X]

TPCC_PARITY_CTRL is shown in Figure 6-1003 and described in Table 6-1010.

Return to the Summary Table.

Figure 6-1003. TPCC_PARITY_CTRL Register

31	30	29	28	27	26	25	24
RESERVED							
R/W-X							
23	22	21	20	19	18	17	16
RESERVED			tpcc_b_parity_err_clr	RESERVED			tpcc_a_parity_err_clr
R/W-X			R/W-0h	R/W-X			R/W-0h
15	14	13	12	11	10	9	8
RESERVED			tpcc_b_parity_testen	RESERVED			tpcc_b_parity_en
R/W-X			R/W-0h	R/W-X			R/W-0h
7	6	5	4	3	2	1	0
RESERVED			tpcc_a_parity_testen	RESERVED			tpcc_a_parity_en
R/W-X			R/W-0h	R/W-X			R/W-0h

Table 6-1010. TPCC_PARITY_CTRL Register Field Descriptions

Bit	Field	Type	Reset	Description
31-21	RESERVED	R/W	X	
20	tpcc_b_parity_err_clr	R/W	0h	Write pulse bit field: parity clear bit. Writing 1'b1 will clear the tpcc_b_parity_addr
19-17	RESERVED	R/W	X	
16	tpcc_a_parity_err_clr	R/W	0h	Write pulse bit field: parity clear bit. Writing 1'b1 will clear the tpcc_a_parity_addr
15-13	RESERVED	R/W	X	
12	tpcc_b_parity_testen	R/W	0h	parity test enable for tpcc b
11-9	RESERVED	R/W	X	
8	tpcc_b_parity_en	R/W	0h	parity en for tpcc b
7-5	RESERVED	R/W	X	
4	tpcc_a_parity_testen	R/W	0h	parity test enable for tpcc a
3-1	RESERVED	R/W	X	

Copyright © 2025 Texas Instruments Incorporated

Table 6-1010. TPCC_PARITY_CTRL Register Field Descriptions (continued)

Bit	Field	Type	Reset	Description
0	tpcc_a_parity_en	R/W	0h	writing 1'b1 enables parity for TPCC_A

6.2.7.89 TPCC_PARITY_STATUS Register (Offset = 160h) [reset = X]

TPCC_PARITY_STATUS is shown in Figure 6-1004 and described in Table 6-1011.

Return to the Summary Table.

Figure 6-1004. TPCC_PARITY_STATUS Register

31	30	29	28	27	26	25	24	23	22	21	20	19	18	17	16
RESERVED								tpcc_b_parity_addr							
R-X								R-0h							
15	14	13	12	11	10	9	8	7	6	5	4	3	2	1	0
RESERVED								tpcc_a_parity_addr							
R-X								R-0h							

Table 6-1011. TPCC_PARITY_STATUS Register Field Descriptions

Bit	Field	Type	Reset	Description
31-24	RESERVED	R	X	
23-16	tpcc_b_parity_addr	R	0h	address where parity error happened for tpccb
15-8	RESERVED	R	X	
7-0	tpcc_a_parity_addr	R	0h	address where parity error happened for tpcca

6.2.7.90 MSS_DBG_ACK_CTL0 Register (Offset = 164h) [reset = X]

MSS_DBG_ACK_CTL0 is shown in Figure 6-1005 and described in Table 6-1012.

Return to the Summary Table.

Figure 6-1005. MSS_DBG_ACK_CTL0 Register

31	30	29	28	27	26	25	24
RESERVED					cpsw		
R/W-X					R/W-0h		
23	22	21	20	19	18	17	16
RESERVED	dccd			RESERVED	dccc		
R/W-X	R/W-0h			R/W-X	R/W-0h		
15	14	13	12	11	10	9	8
RESERVED	dccb			RESERVED	dcca		
R/W-X	R/W-0h			R/W-X	R/W-0h		
7	6	5	4	3	2	1	0
RESERVED	cccb			RESERVED	ccca		
R/W-X	R/W-0h			R/W-X	R/W-0h		

Table 6-1012. MSS_DBG_ACK_CTL0 Register Field Descriptions

Bit	Field	Type	Reset	Description
31-27	RESERVED	R/W	X	

Copyright © 2025 Texas Instruments Incorporated

Table 6-1012. MSS_DBG_ACK_CTL0 Register Field Descriptions (continued)

Bit	Field	Type	Reset	Description
26-24	cpsw	R/W	0h	Enable Suspend control for the peripheral. 0 :Peripheral not suspended along with processor 1: Peripehal Suspended along with procesor
23	RESERVED	R/W	X	
22-20	dccd	R/W	0h	Enable Suspend control for the peripheral. 0 :Peripheral not suspended along with processor 1: Peripehal Suspended along with procesor
19	RESERVED	R/W	X	
18-16	dccc	R/W	0h	Enable Suspend control for the peripheral. 0 :Peripheral not suspended along with processor 1: Peripehal Suspended along with procesor
15	RESERVED	R/W	X	
14-12	dccb	R/W	0h	Enable Suspend control for the peripheral. 0 :Peripheral not suspended along with processor 1: Peripehal Suspended along with procesor
11	RESERVED	R/W	X	
10-8	dcca	R/W	0h	Enable Suspend control for the peripheral. 0 :Peripheral not suspended along with processor 1: Peripehal Suspended along with procesor
7	RESERVED	R/W	X	
6-4	cccb	R/W	0h	Enable Suspend control for the peripheral. 0 :Peripheral not suspended along with processor 1: Peripehal Suspended along with procesor
3	RESERVED	R/W	X	
2-0	ccca	R/W	0h	Enable Suspend control for the peripheral. 0 :Peripheral not suspended along with processor 1: Peripehal Suspended along with procesor

6.2.7.91 MSS_DBG_ACK_CTL1 Register (Offset = 168h) [reset = X]

MSS_DBG_ACK_CTL1 is shown in Figure 6-1006 and described in Table 6-1013.

Return to the Summary Table.

Figure 6-1006. MSS_DBG_ACK_CTL1 Register

31	30	29	28	27	26	25	24
RESERVED						scib	
R/W-X						R/W-0h	
23	22	21	20	19	18	17	16
RESERVED	scia			RESERVED		i2c	
R/W-X	R/W-0h			R/W-X		R/W-0h	
15	14	13	12	11	10	9	8
RESERVED	mcrc			RESERVED		wdt	
R/W-X	R/W-0h			R/W-X		R/W-0h	
7	6	5	4	3	2	1	0
RESERVED	rti			RESERVED		dcan	
R/W-X	R/W-0h			R/W-X		R/W-0h	

Copyright © 2025 Texas Instruments Incorporated

Table 6-1013. MSS_DBG_ACK_CTL1 Register Field Descriptions

Bit	Field	Type	Reset	Description
31-27	RESERVED	R/W	X	
26-24	scib	R/W	0h	Enable Suspend control for the peripheral. 0 :Peripheral not suspended along with processor 1: Peripehal Suspended along with procesor
23	RESERVED	R/W	X	
22-20	scia	R/W	0h	Enable Suspend control for the peripheral. 0 :Peripheral not suspended along with processor 1: Peripehal Suspended along with procesor
19	RESERVED	R/W	X	
18-16	i2c	R/W	0h	Enable Suspend control for the peripheral. 0 :Peripheral not suspended along with processor 1: Peripehal Suspended along with procesor
15	RESERVED	R/W	X	
14-12	mcrc	R/W	0h	Enable Suspend control for the peripheral. 0 :Peripheral not suspended along with processor 1: Peripehal Suspended along with procesor
11	RESERVED	R/W	X	
10-8	wdt	R/W	0h	Enable Suspend control for the peripheral. 0 :Peripheral not suspended along with processor 1: Peripehal Suspended along with procesor
7	RESERVED	R/W	X	
6-4	rti	R/W	0h	Enable Suspend control for the peripheral. 0 :Peripheral not suspended along with processor 1: Peripehal Suspended along with procesor
3	RESERVED	R/W	X	
2-0	dcan	R/W	0h	Enable Suspend control for the peripheral. 0 :Peripheral not suspended along with processor 1: Peripehal Suspended along with procesor

6.2.7.92 CPSW_CONTROL Register (Offset = 16Ch) [reset = X]

CPSW_CONTROL is shown in Figure 6-1007 and described in Table 6-1014.

Return to the Summary Table.

Figure 6-1007. CPSW_CONTROL Register

31	30	29	28	27	26	25	24
RESERVED							
R/W-X							
23	22	21	20	19	18	17	16
RESERVED							rgmii1_id_mode
R/W-X							R/W-0h
15	14	13	12	11	10	9	8
RESERVED							rmii_ref_clk_oe_n
R/W-X							R/W-0h
7	6	5	4	3	2	1	0
RESERVED					port1_mode_sel		
R/W-X					R/W-0h		

Copyright © 2025 Texas Instruments Incorporated

Table 6-1014. CPSW_CONTROL Register Field Descriptions

Bit	Field	Type	Reset	Description
31-17	RESERVED	R/W	X	
16	rgmii1_id_mode	R/W	0h	writing 1'b1 would disable the internal clock delays. And those delays need to be handled on board.
15-9	RESERVED	R/W	X	
8	rmii_ref_clk_oe_n	R/W	0h	To select the rmii_ref_clk from PAD or from MSS_RCM. 0: clock will be from mss_rcm through IO internal loopback 1: will be from IP pad (pad loopback)
7-3	RESERVED	R/W	X	
2-0	port1_mode_sel	R/W	0h	Port 1 Interface 00 = GMII/MII 01 = RMII 10 = RGMII 11 = Not Supported

6.2.7.93 MSS_TPCC_A_ERRAGG_MASK Register (Offset = 170h) [reset = X]

MSS_TPCC_A_ERRAGG_MASK is shown in Figure 6-1008 and described in Table 6-1015.

Return to the Summary Table.

Figure 6-1008. MSS_TPCC_A_ERRAGG_MASK Register

31	30	29	28	27	26	25	24
RESERVED					tptc_a1_read_access_error	tptc_a0_read_access_error	tpcc_a_read_access_error
R/W-X					R/W-0h	R/W-0h	R/W-0h
23	22	21	20	19	18	17	16
RESERVED					tptc_a1_write_access_error	tptc_a0_write_access_error	tpcc_a_write_access_error
R/W-X					R/W-0h	R/W-0h	R/W-0h
15	14	13	12	11	10	9	8
RESERVED							
R/W-X							
7	6	5	4	3	2	1	0
RESERVED			tpcc_a_par_err	tptc_a1_err	tptc_a0_err	tpcc_a_mpint	tpcc_a_errint
R/W-X			R/W-0h	R/W-0h	R/W-0h	R/W-0h	R/W-0h

Table 6-1015. MSS_TPCC_A_ERRAGG_MASK Register Field Descriptions

Bit	Field	Type	Reset	Description
31-27	RESERVED	R/W	X	
26	tptc_a1_read_access_error	R/W	0h	Mask Error from MSS_TPTC_A1 to aggregated Error MSS_TPCC_A_ERRAGG 1 : Error is Masked 0 : Error is Unmasked
25	tptc_a0_read_access_error	R/W	0h	Mask Error from MSS_TPTC_A0 to aggregated Error MSS_TPCC_A_ERRAGG 1 : Error is Masked 0 : Error is Unmasked
24	tpcc_a_read_access_error	R/W	0h	Mask Error from MSS_TPCC_A to aggregated Error MSS_TPCC_A_ERRAGG 1 : Error is Masked 0 : Error is Unmasked
23-19	RESERVED	R/W	X	
18	tptc_a1_write_access_error	R/W	0h	Mask Error from MSS_TPTC_A1 to aggregated Error MSS_TPCC_A_ERRAGG 1 : Error is Masked 0 : Error is Unmasked
17	tptc_a0_write_access_error	R/W	0h	Mask Error from MSS_TPTC_A0 to aggregated Error MSS_TPCC_A_ERRAGG 1 : Error is Masked 0 : Error is Unmasked
16	tpcc_a_write_access_error	R/W	0h	Mask Error from MSS_TPCC_A to aggregated Error MSS_TPCC_A_ERRAGG 1 : Error is Masked 0 : Error is Unmasked
15-5	RESERVED	R/W	X	

Copyright © 2025 Texas Instruments Incorporated

Table 6-1015. MSS_TPCC_A_ERRAGG_MASK Register Field Descriptions (continued)

Bit	Field	Type	Reset	Description
4	tpcc_a_par_err	R/W	0h	Mask Error from MSS_TPCC_A to aggregated Error MSS_TPCC_A_ERRAGG 1 : Error is Masked 0 : Error is Unmasked
3	tptc_a1_err	R/W	0h	Mask Error from MSS_TPTC_A1 to aggregated Error MSS_TPCC_A_ERRAGG 1 : Error is Masked 0 : Error is Unmasked
2	tptc_a0_err	R/W	0h	Mask Error from MSS_TPTC_A0 to aggregated Error MSS_TPCC_A_ERRAGG 1 : Error is Masked 0 : Error is Unmasked
1	tpcc_a_mpint	R/W	0h	Mask Error from MSS_TPCC_A to aggregated Error MSS_TPCC_A_ERRAGG 1 : Error is Masked 0 : Error is Unmasked
0	tpcc_a_errint	R/W	0h	Mask Error from MSS_TPCC_A to aggregated Error MSS_TPCC_A_ERRAGG 1 : Error is Masked 0 : Error is Unmasked

6.2.7.94 MSS_TPCC_A_ERRAGG_STATUS Register (Offset = 174h) [reset = X]

MSS_TPCC_A_ERRAGG_STATUS is shown in Figure 6-1009 and described in Table 6-1016.

Return to the Summary Table.

Figure 6-1009. MSS_TPCC_A_ERRAGG_STATUS Register

31	30	29	28	27	26	25	24
RESERVED					tptc_a1_read_access_error	tptc_a0_read_access_error	tpcc_a_read_access_error
R/W-X					R/W-0h	R/W-0h	R/W-0h
23	22	21	20	19	18	17	16
RESERVED					tptc_a1_write_access_error	tptc_a0_write_access_error	tpcc_a_write_access_error
R/W-X					R/W-0h	R/W-0h	R/W-0h
15	14	13	12	11	10	9	8
RESERVED							
R/W-X							
7	6	5	4	3	2	1	0
RESERVED			tpcc_a_par_err	tptc_a1_err	tptc_a0_err	tpcc_a_mpint	tpcc_a_errint
R/W-X			R/W-0h	R/W-0h	R/W-0h	R/W-0h	R/W-0h

Table 6-1016. MSS_TPCC_A_ERRAGG_STATUS Register Field Descriptions

Bit	Field	Type	Reset	Description
31-27	RESERVED	R/W	X	
26	tptc_a1_read_access_error	R/W	0h	Status of Error from MSS_TPTC_A1. Set only if Interupt is unmasked in MSS_TPCC_A_ERRAGG_MASK Wrie 0x1 to clear this Error.
25	tptc_a0_read_access_error	R/W	0h	Status of Error from MSS_TPTC_A0. Set only if Interupt is unmasked in MSS_TPCC_A_ERRAGG_MASK Wrie 0x1 to clear this Error.
24	tpcc_a_read_access_error	R/W	0h	Status of Error from MSS_TPCC_A. Set only if Interupt is unmasked in MSS_TPCC_A_ERRAGG_MASK Wrie 0x1 to clear this Error.
23-19	RESERVED	R/W	X	
18	tptc_a1_write_access_error	R/W	0h	Status of Error from MSS_TPTC_A1. Set only if Interupt is unmasked in MSS_TPCC_A_ERRAGG_MASK Wrie 0x1 to clear this Error.
17	tptc_a0_write_access_error	R/W	0h	Status of Error from MSS_TPTC_A0. Set only if Interupt is unmasked in MSS_TPCC_A_ERRAGG_MASK Wrie 0x1 to clear this Error.
16	tpcc_a_write_access_error	R/W	0h	Status of Error from MSS_TPCC_A. Set only if Interupt is unmasked in MSS_TPCC_A_ERRAGG_MASK Wrie 0x1 to clear this Error.
15-5	RESERVED	R/W	X	

Copyright © 2025 Texas Instruments Incorporated

Table 6-1016. MSS_TPCC_A_ERRAGG_STATUS Register Field Descriptions (continued)

Bit	Field	Type	Reset	Description
4	tpcc_a_par_err	R/W	0h	Status of Error from MSS_TPCC_A. Set only if Interupt is unmasked in MSS_TPCC_A_ERRAGG_MASK Wrie 0x1 to clear this Error.
3	tptc_a1_err	R/W	0h	Status of Error from MSS_TPTC_A1. Set only if Interupt is unmasked in MSS_TPCC_A_ERRAGG_MASK Wrie 0x1 to clear this Error.
2	tptc_a0_err	R/W	0h	Status of Error from MSS_TPTC_A0. Set only if Interupt is unmasked in MSS_TPCC_A_ERRAGG_MASK Wrie 0x1 to clear this Error.
1	tpcc_a_mpint	R/W	0h	Status of Error from MSS_TPCC_A. Set only if Interupt is unmasked in MSS_TPCC_A_ERRAGG_MASK Wrie 0x1 to clear this Error.
0	tpcc_a_errint	R/W	0h	Status of Error from MSS_TPCC_A. Set only if Interupt is unmasked in MSS_TPCC_A_ERRAGG_MASK Wrie 0x1 to clear this Error.

6.2.7.95 MSS_TPCC_A_ERRAGG_STATUS_RAW Register (Offset = 178h) [reset = X]

MSS_TPCC_A_ERRAGG_STATUS_RAW is shown in Figure 6-1010 and described in Table 6-1017.

Return to the Summary Table.

Figure 6-1010. MSS_TPCC_A_ERRAGG_STATUS_RAW Register

31	30	29	28	27	26	25	24
RESERVED					tptc_a1_read_access_error	tptc_a0_read_access_error	tpcc_a_read_access_error
R/W-X					R/W-0h	R/W-0h	R/W-0h
23	22	21	20	19	18	17	16
RESERVED					tptc_a1_write_access_error	tptc_a0_write_access_error	tpcc_a_write_access_error
R/W-X					R/W-0h	R/W-0h	R/W-0h
15	14	13	12	11	10	9	8
RESERVED							
R/W-X							
7	6	5	4	3	2	1	0
RESERVED			tpcc_a_par_err	tptc_a1_err	tptc_a0_err	tpcc_a_mpint	tpcc_a_errint
R/W-X			R/W-0h	R/W-0h	R/W-0h	R/W-0h	R/W-0h

Table 6-1017. MSS_TPCC_A_ERRAGG_STATUS_RAW Register Field Descriptions

Bit	Field	Type	Reset	Description
31-27	RESERVED	R/W	X	
26	tptc_a1_read_access_error	R/W	0h	Raw Status of Error from MSS_TPTC_A1. Set irrespective if the Interupt is masked or unmasked in MSS_TPCC_A_ERRAGG_MASK
25	tptc_a0_read_access_error	R/W	0h	Raw Status of Error from MSS_TPTC_A0. Set irrespective if the Interupt is masked or unmasked in MSS_TPCC_A_ERRAGG_MASK
24	tpcc_a_read_access_error	R/W	0h	Raw Status of Error from MSS_TPCC_A. Set irrespective if the Interupt is masked or unmasked in MSS_TPCC_A_ERRAGG_MASK
23-19	RESERVED	R/W	X	
18	tptc_a1_write_access_error	R/W	0h	Raw Status of Error from MSS_TPTC_A1. Set irrespective if the Interupt is masked or unmasked in MSS_TPCC_A_ERRAGG_MASK
17	tptc_a0_write_access_error	R/W	0h	Raw Status of Error from MSS_TPTC_A0. Set irrespective if the Interupt is masked or unmasked in MSS_TPCC_A_ERRAGG_MASK
16	tpcc_a_write_access_error	R/W	0h	Raw Status of Error from MSS_TPCC_A. Set irrespective if the Interupt is masked or unmasked in MSS_TPCC_A_ERRAGG_MASK
15-5	RESERVED	R/W	X	

Copyright © 2025 Texas Instruments Incorporated

Table 6-1017. MSS_TPCC_A_ERRAGG_STATUS_RAW Register Field Descriptions (continued)

Bit	Field	Type	Reset	Description
4	tpcc_a_par_err	R/W	0h	Raw Status of Error from MSS_TPCC_A. Set irrespective if the Interupt is masked or unmasked in MSS_TPCC_A_ERRAGG_MASK
3	tptc_a1_err	R/W	0h	Raw Status of Error from MSS_TPTC_A1. Set irrespective if the Interupt is masked or unmasked in MSS_TPCC_A_ERRAGG_MASK
2	tptc_a0_err	R/W	0h	Raw Status of Error from MSS_TPTC_A0. Set irrespective if the Interupt is masked or unmasked in MSS_TPCC_A_ERRAGG_MASK
1	tpcc_a_mpint	R/W	0h	Raw Status of Error from MSS_TPCC_A. Set irrespective if the Interupt is masked or unmasked in MSS_TPCC_A_ERRAGG_MASK
0	tpcc_a_errint	R/W	0h	Raw Status of Error from MSS_TPCC_A. Set irrespective if the Interupt is masked or unmasked in MSS_TPCC_A_ERRAGG_MASK

6.2.7.96 MSS_TPCC_A_INTAGG_MASK Register (Offset = 17Ch) [reset = X]

MSS_TPCC_A_INTAGG_MASK is shown in Figure 6-1011 and described in Table 6-1018.

Return to the Summary Table.

Figure 6-1011. MSS_TPCC_A_INTAGG_MASK Register

31	30	29	28	27	26	25	24
RESERVED							
R/W-X							
23	22	21	20	19	18	17	16
RESERVED						tptc_a1	tptc_a0
R/W-X						R/W-0h	R/W-0h
15	14	13	12	11	10	9	8
RESERVED							tpcc_a_int7
R/W-X							R/W-0h
7	6	5	4	3	2	1	0
tpcc_a_int6	tpcc_a_int5	tpcc_a_int4	tpcc_a_int3	tpcc_a_int2	tpcc_a_int1	tpcc_a_int0	tpcc_a_intg
R/W-0h	R/W-0h	R/W-0h	R/W-0h	R/W-0h	R/W-0h	R/W-0h	R/W-0h

Table 6-1018. MSS_TPCC_A_INTAGG_MASK Register Field Descriptions

Bit	Field	Type	Reset	Description
31-18	RESERVED	R/W	X	
17	tptc_a1	R/W	0h	Mask Interrupt from TPTC A1 to aggregated Interrupt MSS_TPCC_A_INTAGG 1 : Interrupt is Masked 0 : Interrupt is Unmasked
16	tptc_a0	R/W	0h	Mask Interrupt from TPTC A0 to aggregated Interrupt MSS_TPCC_A_INTAGG 1 : Interrupt is Masked 0 : Interrupt is Unmasked
15-9	RESERVED	R/W	X	
8	tpcc_a_int7	R/W	0h	Mask Interrupt from MSS_TPCC_A to aggregated Interrupt MSS_TPCC_A_INTAGG 1 : Interrupt is Masked 0 : Interrupt is Unmasked
7	tpcc_a_int6	R/W	0h	Mask Interrupt from MSS_TPCC_A to aggregated Interrupt MSS_TPCC_A_INTAGG 1 : Interrupt is Masked 0 : Interrupt is Unmasked
6	tpcc_a_int5	R/W	0h	Mask Interrupt from MSS_TPCC_A to aggregated Interrupt MSS_TPCC_A_INTAGG 1 : Interrupt is Masked 0 : Interrupt is Unmasked

Copyright © 2025 Texas Instruments Incorporated

Table 6-1018. MSS_TPCC_A_INTAGG_MASK Register Field Descriptions (continued)

Bit	Field	Type	Reset	Description
5	tpcc_a_int4	R/W	0h	Mask Interrupt from MSS_TPCC_A to aggregated Interrupt MSS_TPCC_A_INTAGG 1 : Interrupt is Masked 0 : Interrupt is Unmasked
4	tpcc_a_int3	R/W	0h	Mask Interrupt from MSS_TPCC_A to aggregated Interrupt MSS_TPCC_A_INTAGG 1 : Interrupt is Masked 0 : Interrupt is Unmasked
3	tpcc_a_int2	R/W	0h	Mask Interrupt from MSS_TPCC_A to aggregated Interrupt MSS_TPCC_A_INTAGG 1 : Interrupt is Masked 0 : Interrupt is Unmasked
2	tpcc_a_int1	R/W	0h	Mask Interrupt from MSS_TPCC_A to aggregated Interrupt MSS_TPCC_A_INTAGG 1 : Interrupt is Masked 0 : Interrupt is Unmasked
1	tpcc_a_int0	R/W	0h	Mask Interrupt from TPCC A to aggregated Interrupt MSS_TPCC_A_INTAGG 1 : Interrupt is Masked 0 : Interrupt is Unmasked
0	tpcc_a_intg	R/W	0h	Mask Interrupt from MSS_TPCC_A to aggregated Interrupt MSS_TPCC_A_INTAGG 1 : Interrupt is Masked 0 : Interrupt is Unmasked

6.2.7.97 MSS_TPCC_A_INTAGG_STATUS Register (Offset = 180h) [reset = X]

MSS_TPCC_A_INTAGG_STATUS is shown in Figure 6-1012 and described in Table 6-1019.

Return to the Summary Table.

Figure 6-1012. MSS_TPCC_A_INTAGG_STATUS Register

31	30	29	28	27	26	25	24
RESERVED							
R/W-X							
23	22	21	20	19	18	17	16
RESERVED						tptc_a1	tptc_a0
R/W-X						R/W-0h	R/W-0h
15	14	13	12	11	10	9	8
RESERVED							tpcc_a_int7
R/W-X							R/W-0h
7	6	5	4	3	2	1	0
tpcc_a_int6	tpcc_a_int5	tpcc_a_int4	tpcc_a_int3	tpcc_a_int2	tpcc_a_int1	tpcc_a_int0	tpcc_a_intg
R/W-0h	R/W-0h	R/W-0h	R/W-0h	R/W-0h	R/W-0h	R/W-0h	R/W-0h

Table 6-1019. MSS_TPCC_A_INTAGG_STATUS Register Field Descriptions

Bit	Field	Type	Reset	Description
31-18	RESERVED	R/W	X	
17	tptc_a1	R/W	0h	Status of Interrupt from TPTC A1. Set only if Interupt is unmasked in MSS_TPCC_A_INTAGG_MASK Wrie 0x1 to clear this interrupt.
16	tptc_a0	R/W	0h	Status of Interrupt from TPTC A0. Set only if Interupt is unmasked in MSS_TPCC_A_INTAGG_MASK Wrie 0x1 to clear this interrupt.
15-9	RESERVED	R/W	X	
8	tpcc_a_int7	R/W	0h	Status of Interrupt from MSS_TPCC_A. Set only if Interupt is unmasked in MSS_TPCC_A_INTAGG_MASK Wrie 0x1 to clear this interrupt.

Copyright © 2025 Texas Instruments Incorporated

Table 6-1019. MSS_TPCC_A_INTAGG_STATUS Register Field Descriptions (continued)

Bit	Field	Type	Reset	Description
7	tpcc_a_int6	R/W	0h	Status of Interrupt from MSS_TPCC_A. Set only if Interupt is unmasked in MSS_TPCC_A_INTAGG_MASK Wrie 0x1 to clear this interrupt.
6	tpcc_a_int5	R/W	0h	Status of Interrupt from MSS_TPCC_A. Set only if Interupt is unmasked in MSS_TPCC_A_INTAGG_MASK Wrie 0x1 to clear this interrupt.
5	tpcc_a_int4	R/W	0h	Status of Interrupt from MSS_TPCC_A. Set only if Interupt is unmasked in MSS_TPCC_A_INTAGG_MASK Wrie 0x1 to clear this interrupt.
4	tpcc_a_int3	R/W	0h	Status of Interrupt from MSS_TPCC_A. Set only if Interupt is unmasked in MSS_TPCC_A_INTAGG_MASK Wrie 0x1 to clear this interrupt.
3	tpcc_a_int2	R/W	0h	Status of Interrupt from MSS_TPCC_A. Set only if Interupt is unmasked in MSS_TPCC_A_INTAGG_MASK Wrie 0x1 to clear this interrupt.
2	tpcc_a_int1	R/W	0h	Status of Interrupt from MSS_TPCC_A. Set only if Interupt is unmasked in MSS_TPCC_A_INTAGG_MASK Wrie 0x1 to clear this interrupt.
1	tpcc_a_int0	R/W	0h	Status of Interrupt from TPCC A Set only if Interupt is unmasked in MSS_TPCC_A_INTAGG_MASK Wrie 0x1 to clear this interrupt.
0	tpcc_a_intg	R/W	0h	Status of Interrupt from MSS_TPCC_A. Set only if Interupt is unmasked in MSS_TPCC_A_INTAGG_MASK Wrie 0x1 to clear this interrupt.

6.2.7.98 MSS_TPCC_A_INTAGG_STATUS_RAW Register (Offset = 184h) [reset = X]

MSS_TPCC_A_INTAGG_STATUS_RAW is shown in Figure 6-1013 and described in Table 6-1020.

Return to the Summary Table.

Figure 6-1013. MSS_TPCC_A_INTAGG_STATUS_RAW Register

31	30	29	28	27	26	25	24
RESERVED							
R/W-X							
23	22	21	20	19	18	17	16
RESERVED						tptc_a1	tptc_a0
R/W-X						R/W-0h	R/W-0h
15	14	13	12	11	10	9	8
RESERVED							tpcc_a_int7
R/W-X							R/W-0h
7	6	5	4	3	2	1	0
tpcc_a_int6	tpcc_a_int5	tpcc_a_int4	tpcc_a_int3	tpcc_a_int2	tpcc_a_int1	tpcc_a_int0	tpcc_a_intg
R/W-0h	R/W-0h	R/W-0h	R/W-0h	R/W-0h	R/W-0h	R/W-0h	R/W-0h

Table 6-1020. MSS_TPCC_A_INTAGG_STATUS_RAW Register Field Descriptions

Bit	Field	Type	Reset	Description
31-18	RESERVED	R/W	X	
17	tptc_a1	R/W	0h	Raw Status of Interrupt from TPTC A1. Set irrespective if the Interupt is masked or unmasked in MSS_TPCC_A_INTAGG_MASK
16	tptc_a0	R/W	0h	Raw Status of Interrupt from TPTC A0. Set irrespective if the Interupt is masked or unmasked in MSS_TPCC_A_INTAGG_MASK

Copyright © 2025 Texas Instruments Incorporated

Table 6-1020. MSS_TPCC_A_INTAGG_STATUS_RAW Register Field Descriptions (continued)

Bit	Field	Type	Reset	Description
15-9	RESERVED	R/W	X	
8	tpcc_a_int7	R/W	0h	Raw Status of Interrupt from MSS_TPCC_A. Set irrespective if the Interupt is masked or unmasked in MSS_TPCC_C_INTAGG_MASK
7	tpcc_a_int6	R/W	0h	Raw Status of Interrupt from MSS_TPCC_A. Set irrespective if the Interupt is masked or unmasked in MSS_TPCC_C_INTAGG_MASK
6	tpcc_a_int5	R/W	0h	Raw Status of Interrupt from MSS_TPCC_A. Set irrespective if the Interupt is masked or unmasked in MSS_TPCC_C_INTAGG_MASK
5	tpcc_a_int4	R/W	0h	Raw Status of Interrupt from MSS_TPCC_A. Set irrespective if the Interupt is masked or unmasked in MSS_TPCC_C_INTAGG_MASK
4	tpcc_a_int3	R/W	0h	Raw Status of Interrupt from MSS_TPCC_A. Set irrespective if the Interupt is masked or unmasked in MSS_TPCC_C_INTAGG_MASK
3	tpcc_a_int2	R/W	0h	Raw Status of Interrupt from MSS_TPCC_A. Set irrespective if the Interupt is masked or unmasked in MSS_TPCC_C_INTAGG_MASK
2	tpcc_a_int1	R/W	0h	Raw Status of Interrupt from MSS_TPCC_A. Set irrespective if the Interupt is masked or unmasked in MSS_TPCC_C_INTAGG_MASK
1	tpcc_a_int0	R/W	0h	Raw Status of Interrupt from TPCC A. Set irrespective if the Interupt is masked or unmasked in MSS_TPCC_A_INTAGG_MASK
0	tpcc_a_intg	R/W	0h	Raw Status of Interrupt from MSS_TPCC_A. Set irrespective if the Interupt is masked or unmasked in MSS_TPCC_C_INTAGG_MASK

6.2.7.99 MSS_TPCC_B_ERRAGG_MASK Register (Offset = 188h) [reset = X]

MSS_TPCC_B_ERRAGG_MASK is shown in Figure 6-1014 and described in Table 6-1021.

Return to the Summary Table.

Figure 6-1014. MSS_TPCC_B_ERRAGG_MASK Register

31	30	29	28	27	26	25	24
RESERVED						tptc_b0_read_access_error	tpcc_b_read_access_error
R/W-X						R/W-0h	R/W-0h
23	22	21	20	19	18	17	16
RESERVED						tptc_b0_write_access_error	tpcc_b_write_access_error
R/W-X						R/W-0h	R/W-0h
15	14	13	12	11	10	9	8
RESERVED							
R/W-X							
7	6	5	4	3	2	1	0
RESERVED			tpcc_b_par_err	RESERVED	tptc_b0_err	tpcc_b_mpint	tpcc_b_errint
R/W-X			R/W-0h	R/W-X	R/W-0h	R/W-0h	R/W-0h

Table 6-1021. MSS_TPCC_B_ERRAGG_MASK Register Field Descriptions

Bit	Field	Type	Reset	Description
31-26	RESERVED	R/W	X	
25	tptc_b0_read_access_error	R/W	0h	Mask Error from MSS_TPTC_B0 to aggregated Error MSS_TPCC_B_ERRAGG 1 : Error is Masked 0 : Error is Unmasked
24	tpcc_b_read_access_error	R/W	0h	Mask Error from MSS_TPCC_B to aggregated Error MSS_TPCC_B_ERRAGG 1 : Error is Masked 0 : Error is Unmasked
23-18	RESERVED	R/W	X	

Copyright © 2025 Texas Instruments Incorporated

Table 6-1021. MSS_TPCC_B_ERRAGG_MASK Register Field Descriptions (continued)

Bit	Field	Type	Reset	Description
17	tptc_b0_write_access_error	R/W	0h	Mask Error from MSS_TPTC_B0 to aggregated Error MSS_TPCC_B_ERRAGG 1 : Error is Masked 0 : Error is Unmasked
16	tpcc_b_write_access_error	R/W	0h	Mask Error from MSS_TPCC_B to aggregated Error MSS_TPCC_B_ERRAGG 1 : Error is Masked 0 : Error is Unmasked
15-5	RESERVED	R/W	X	
4	tpcc_b_par_err	R/W	0h	Mask Error from MSS_TPCC_B to aggregated Error MSS_TPCC_B_ERRAGG 1 : Error is Masked 0 : Error is Unmasked
3	RESERVED	R/W	X	
2	tptc_b0_err	R/W	0h	Mask Error from MSS_TPTC_B0 to aggregated Error MSS_TPCC_B_ERRAGG 1 : Error is Masked 0 : Error is Unmasked
1	tpcc_b_mpint	R/W	0h	Mask Error from MSS_TPCC_B to aggregated Error MSS_TPCC_B_ERRAGG 1 : Error is Masked 0 : Error is Unmasked
0	tpcc_b_errint	R/W	0h	Mask Error from MSS_TPCC_B to aggregated Error MSS_TPCC_B_ERRAGG 1 : Error is Masked 0 : Error is Unmasked

6.2.7.100 MSS_TPCC_B_ERRAGG_STATUS Register (Offset = 18Ch) [reset = X]

MSS_TPCC_B_ERRAGG_STATUS is shown in Figure 6-1015 and described in Table 6-1022.

Return to the Summary Table.

Figure 6-1015. MSS_TPCC_B_ERRAGG_STATUS Register

31	30	29	28	27	26	25	24
RESERVED						tptc_b0_read_access_error	tpcc_b_read_access_error
R/W-X						R/W-0h	R/W-0h
23	22	21	20	19	18	17	16
RESERVED						tptc_b0_write_access_error	tpcc_b_write_access_error
R/W-X						R/W-0h	R/W-0h
15	14	13	12	11	10	9	8
RESERVED							
R/W-X							
7	6	5	4	3	2	1	0
RESERVED			tpcc_b_par_err	RESERVED	tptc_b0_err	tpcc_b_mpint	tpcc_b_errint
R/W-X			R/W-0h	R/W-X	R/W-0h	R/W-0h	R/W-0h

Table 6-1022. MSS_TPCC_B_ERRAGG_STATUS Register Field Descriptions

Bit	Field	Type	Reset	Description
31-26	RESERVED	R/W	X	
25	tptc_b0_read_access_error	R/W	0h	Status of Error from MSS_TPTC_B0. Set only if Interupt is unmasked in MSS_TPCC_B_ERRAGG_MASK Wrie 0x1 to clear this Error.
24	tpcc_b_read_access_error	R/W	0h	Status of Error from MSS_TPCC_B. Set only if Interupt is unmasked in MSS_TPCC_B_ERRAGG_MASK Wrie 0x1 to clear this Error.
23-18	RESERVED	R/W	X	
17	tptc_b0_write_access_error	R/W	0h	Status of Error from MSS_TPTC_B0. Set only if Interupt is unmasked in MSS_TPCC_B_ERRAGG_MASK Wrie 0x1 to clear this Error.
16	tpcc_b_write_access_error	R/W	0h	Status of Error from MSS_TPCC_B. Set only if Interupt is unmasked in MSS_TPCC_B_ERRAGG_MASK Wrie 0x1 to clear this Error.
15-5	RESERVED	R/W	X	

Copyright © 2025 Texas Instruments Incorporated

Table 6-1022. MSS_TPCC_B_ERRAGG_STATUS Register Field Descriptions (continued)

Bit	Field	Type	Reset	Description
4	tpcc_b_par_err	R/W	0h	Status of Error from MSS_TPCC_B. Set only if Interupt is unmasked in MSS_TPCC_B_ERRAGG_MASK Wrie 0x1 to clear this Error.
3	RESERVED	R/W	X	
2	tptc_b0_err	R/W	0h	Status of Error from MSS_TPTC_B0. Set only if Interupt is unmasked in MSS_TPCC_B_ERRAGG_MASK Wrie 0x1 to clear this Error.
1	tpcc_b_mpint	R/W	0h	Status of Error from MSS_TPCC_B. Set only if Interupt is unmasked in MSS_TPCC_B_ERRAGG_MASK Wrie 0x1 to clear this Error.
0	tpcc_b_errint	R/W	0h	Status of Error from MSS_TPCC_B. Set only if Interupt is unmasked in MSS_TPCC_B_ERRAGG_MASK Wrie 0x1 to clear this Error.

6.2.7.101 MSS_TPCC_B_ERRAGG_STATUS_RAW Register (Offset = 190h) [reset = X]

MSS_TPCC_B_ERRAGG_STATUS_RAW is shown in Figure 6-1016 and described in Table 6-1023.

Return to the Summary Table.

Figure 6-1016. MSS_TPCC_B_ERRAGG_STATUS_RAW Register

31	30	29	28	27	26	25	24
RESERVED						tptc_b0_read_access_error	tpcc_b_read_access_error
R/W-X						R/W-0h	R/W-0h
23	22	21	20	19	18	17	16
RESERVED						tptc_b0_write_access_error	tpcc_b_write_access_error
R/W-X						R/W-0h	R/W-0h
15	14	13	12	11	10	9	8
RESERVED							
R/W-X							
7	6	5	4	3	2	1	0
RESERVED			tpcc_b_par_err	RESERVED	tptc_b0_err	tpcc_b_mpint	tpcc_b_errint
R/W-X			R/W-0h	R/W-X	R/W-0h	R/W-0h	R/W-0h

Table 6-1023. MSS_TPCC_B_ERRAGG_STATUS_RAW Register Field Descriptions

Bit	Field	Type	Reset	Description
31-26	RESERVED	R/W	X	
25	tptc_b0_read_access_error	R/W	0h	Raw Status of Error from MSS_TPTC_B0. Set irrespective if the Interupt is masked or unmasked in MSS_TPCC_B_ERRAGG_MASK
24	tpcc_b_read_access_error	R/W	0h	Raw Status of Error from MSS_TPCC_B. Set irrespective if the Interupt is masked or unmasked in MSS_TPCC_B_ERRAGG_MASK
23-18	RESERVED	R/W	X	
17	tptc_b0_write_access_error	R/W	0h	Raw Status of Error from MSS_TPTC_B0. Set irrespective if the Interupt is masked or unmasked in MSS_TPCC_B_ERRAGG_MASK
16	tpcc_b_write_access_error	R/W	0h	Raw Status of Error from MSS_TPCC_B. Set irrespective if the Interupt is masked or unmasked in MSS_TPCC_B_ERRAGG_MASK
15-5	RESERVED	R/W	X	
4	tpcc_b_par_err	R/W	0h	Raw Status of Error from MSS_TPCC_B. Set irrespective if the Interupt is masked or unmasked in MSS_TPCC_B_ERRAGG_MASK
3	RESERVED	R/W	X	
2	tptc_b0_err	R/W	0h	Raw Status of Error from MSS_TPTC_B0. Set irrespective if the Interupt is masked or unmasked in MSS_TPCC_B_ERRAGG_MASK

Copyright © 2025 Texas Instruments Incorporated

Table 6-1023. MSS_TPCC_B_ERRAGG_STATUS_RAW Register Field Descriptions (continued)

Bit	Field	Type	Reset	Description
1	tpcc_b_mpint	R/W	0h	Raw Status of Error from MSS_TPCC_B. Set irrespective if the Interupt is masked or unmasked in MSS_TPCC_B_ERRAGG_MASK
0	tpcc_b_errint	R/W	0h	Raw Status of Error from MSS_TPCC_B. Set irrespective if the Interupt is masked or unmasked in MSS_TPCC_B_ERRAGG_MASK

6.2.7.102 MSS_TPCC_B_INTAGG_MASK Register (Offset = 194h) [reset = X]

MSS_TPCC_B_INTAGG_MASK is shown in Figure 6-1017 and described in Table 6-1024.

Return to the Summary Table.

Figure 6-1017. MSS_TPCC_B_INTAGG_MASK Register

31	30	29	28	27	26	25	24
RESERVED							
R/W-X							
23	22	21	20	19	18	17	16
RESERVED							tptc_b0
R/W-X							R/W-0h
15	14	13	12	11	10	9	8
RESERVED							tpcc_b_int7
R/W-X							R/W-0h
7	6	5	4	3	2	1	0
tpcc_b_int6	tpcc_b_int5	tpcc_b_int4	tpcc_b_int3	tpcc_b_int2	tpcc_b_int1	tpcc_b_int0	tpcc_b_intg
R/W-0h	R/W-0h	R/W-0h	R/W-0h	R/W-0h	R/W-0h	R/W-0h	R/W-0h

Table 6-1024. MSS_TPCC_B_INTAGG_MASK Register Field Descriptions

Bit	Field	Type	Reset	Description
31-17	RESERVED	R/W	X	
16	tptc_b0	R/W	0h	Mask Interrupt from TPTC A0 to aggregated Interrupt MSS_TPCC_A_INTAGG 1 : Interrupt is Masked 0 : Interrupt is Unmasked
15-9	RESERVED	R/W	X	
8	tpcc_b_int7	R/W	0h	Mask Interrupt from MSS_TPCC_B to aggregated Interrupt MSS_TPCC_B_INTAGG 1 : Interrupt is Masked 0 : Interrupt is Unmasked
7	tpcc_b_int6	R/W	0h	Mask Interrupt from MSS_TPCC_B to aggregated Interrupt MSS_TPCC_B_INTAGG 1 : Interrupt is Masked 0 : Interrupt is Unmasked
6	tpcc_b_int5	R/W	0h	Mask Interrupt from MSS_TPCC_B to aggregated Interrupt MSS_TPCC_B_INTAGG 1 : Interrupt is Masked 0 : Interrupt is Unmasked
5	tpcc_b_int4	R/W	0h	Mask Interrupt from MSS_TPCC_B to aggregated Interrupt MSS_TPCC_B_INTAGG 1 : Interrupt is Masked 0 : Interrupt is Unmasked
4	tpcc_b_int3	R/W	0h	Mask Interrupt from MSS_TPCC_B to aggregated Interrupt MSS_TPCC_B_INTAGG 1 : Interrupt is Masked 0 : Interrupt is Unmasked
3	tpcc_b_int2	R/W	0h	Mask Interrupt from MSS_TPCC_B to aggregated Interrupt MSS_TPCC_B_INTAGG 1 : Interrupt is Masked 0 : Interrupt is Unmasked

Copyright © 2025 Texas Instruments Incorporated

Table 6-1024. MSS_TPCC_B_INTAGG_MASK Register Field Descriptions (continued)

Bit	Field	Type	Reset	Description
2	tpcc_b_int1	R/W	0h	Mask Interrupt from MSS_TPCC_B to aggregated Interrupt MSS_TPCC_B_INTAGG 1 : Interrupt is Masked 0 : Interrupt is Unmasked
1	tpcc_b_int0	R/W	0h	Mask Interrupt from MSS_TPCC_B to aggregated Interrupt MSS_TPCC_B_INTAGG 1 : Interrupt is Masked 0 : Interrupt is Unmasked
0	tpcc_b_intg	R/W	0h	Mask Interrupt from MSS_TPCC_B to aggregated Interrupt MSS_TPCC_B_INTAGG 1 : Interrupt is Masked 0 : Interrupt is Unmasked

6.2.7.103 MSS_TPCC_B_INTAGG_STATUS Register (Offset = 198h) [reset = X]

MSS_TPCC_B_INTAGG_STATUS is shown in Figure 6-1018 and described in Table 6-1025.

Return to the Summary Table.

Figure 6-1018. MSS_TPCC_B_INTAGG_STATUS Register

31	30	29	28	27	26	25	24
RESERVED							
R/W-X							
23	22	21	20	19	18	17	16
RESERVED							tptc_b0
R/W-X							R/W-0h
15	14	13	12	11	10	9	8
RESERVED							tpcc_b_int7
R/W-X							R/W-0h
7	6	5	4	3	2	1	0
tpcc_b_int6	tpcc_b_int5	tpcc_b_int4	tpcc_b_int3	tpcc_b_int2	tpcc_b_int1	tpcc_b_int0	tpcc_b_intg
R/W-0h	R/W-0h	R/W-0h	R/W-0h	R/W-0h	R/W-0h	R/W-0h	R/W-0h

Table 6-1025. MSS_TPCC_B_INTAGG_STATUS Register Field Descriptions

Bit	Field	Type	Reset	Description
31-17	RESERVED	R/W	X	
16	tptc_b0	R/W	0h	Status of Interrupt from TPTC A0. Set only if Interupt is unmasked in MSS_TPCC_A_INTAGG_MASK Wrie 0x1 to clear this interrupt.
15-9	RESERVED	R/W	X	
8	tpcc_b_int7	R/W	0h	Status of Interrupt from MSS_TPCC_B. Set only if Interupt is unmasked in MSS_TPCC_B_INTAGG_MASK Wrie 0x1 to clear this interrupt.
7	tpcc_b_int6	R/W	0h	Status of Interrupt from MSS_TPCC_B. Set only if Interupt is unmasked in MSS_TPCC_B_INTAGG_MASK Wrie 0x1 to clear this interrupt.
6	tpcc_b_int5	R/W	0h	Status of Interrupt from MSS_TPCC_B. Set only if Interupt is unmasked in MSS_TPCC_B_INTAGG_MASK Wrie 0x1 to clear this interrupt.
5	tpcc_b_int4	R/W	0h	Status of Interrupt from MSS_TPCC_B. Set only if Interupt is unmasked in MSS_TPCC_B_INTAGG_MASK Wrie 0x1 to clear this interrupt.
4	tpcc_b_int3	R/W	0h	Status of Interrupt from MSS_TPCC_B. Set only if Interupt is unmasked in MSS_TPCC_B_INTAGG_MASK Wrie 0x1 to clear this interrupt.

Copyright © 2025 Texas Instruments Incorporated

Table 6-1025. MSS_TPCC_B_INTAGG_STATUS Register Field Descriptions (continued)

Bit	Field	Type	Reset	Description
3	tpcc_b_int2	R/W	0h	Status of Interrupt from MSS_TPCC_B. Set only if Interupt is unmasked in MSS_TPCC_B_INTAGG_MASK Wrie 0x1 to clear this interrupt.
2	tpcc_b_int1	R/W	0h	Status of Interrupt from MSS_TPCC_B. Set only if Interupt is unmasked in MSS_TPCC_B_INTAGG_MASK Wrie 0x1 to clear this interrupt.
1	tpcc_b_int0	R/W	0h	Status of Interrupt from MSS_TPCC_B. Set only if Interupt is unmasked in MSS_TPCC_B_INTAGG_MASK Wrie 0x1 to clear this interrupt.
0	tpcc_b_intg	R/W	0h	Status of Interrupt from MSS_TPCC_B. Set only if Interupt is unmasked in MSS_TPCC_B_INTAGG_MASK Wrie 0x1 to clear this interrupt.

6.2.7.104 MSS_TPCC_B_INTAGG_STATUS_RAW Register (Offset = 19Ch) [reset = X]

MSS_TPCC_B_INTAGG_STATUS_RAW is shown in Figure 6-1019 and described in Table 6-1026.

Return to the Summary Table.

Figure 6-1019. MSS_TPCC_B_INTAGG_STATUS_RAW Register

31	30	29	28	27	26	25	24
RESERVED							
R/W-X							
23	22	21	20	19	18	17	16
RESERVED							tptc_b0
R/W-X							R/W-0h
15	14	13	12	11	10	9	8
RESERVED							tpcc_b_int7
R/W-X							R/W-0h
7	6	5	4	3	2	1	0
tpcc_b_int6	tpcc_b_int5	tpcc_b_int4	tpcc_b_int3	tpcc_b_int2	tpcc_b_int1	tpcc_b_int0	tpcc_b_intg
R/W-0h	R/W-0h	R/W-0h	R/W-0h	R/W-0h	R/W-0h	R/W-0h	R/W-0h

Table 6-1026. MSS_TPCC_B_INTAGG_STATUS_RAW Register Field Descriptions

Bit	Field	Type	Reset	Description
31-17	RESERVED	R/W	X	
16	tptc_b0	R/W	0h	Raw Status of Interrupt from TPTC A0. Set irrespective if the Interupt is masked or unmasked in MSS_TPCC_A_INTAGG_MASK
15-9	RESERVED	R/W	X	
8	tpcc_b_int7	R/W	0h	Raw Status of Interrupt from MSS_TPCC_B. Set irrespective if the Interupt is masked or unmasked in MSS_TPCC_C_INTAGG_MASK
7	tpcc_b_int6	R/W	0h	Raw Status of Interrupt from MSS_TPCC_B. Set irrespective if the Interupt is masked or unmasked in MSS_TPCC_C_INTAGG_MASK
6	tpcc_b_int5	R/W	0h	Raw Status of Interrupt from MSS_TPCC_B. Set irrespective if the Interupt is masked or unmasked in MSS_TPCC_C_INTAGG_MASK
5	tpcc_b_int4	R/W	0h	Raw Status of Interrupt from MSS_TPCC_B. Set irrespective if the Interupt is masked or unmasked in MSS_TPCC_C_INTAGG_MASK
4	tpcc_b_int3	R/W	0h	Raw Status of Interrupt from MSS_TPCC_B. Set irrespective if the Interupt is masked or unmasked in MSS_TPCC_C_INTAGG_MASK
3	tpcc_b_int2	R/W	0h	Raw Status of Interrupt from MSS_TPCC_B. Set irrespective if the Interupt is masked or unmasked in MSS_TPCC_C_INTAGG_MASK

Copyright © 2025 Texas Instruments Incorporated

Table 6-1026. MSS_TPCC_B_INTAGG_STATUS_RAW Register Field Descriptions (continued)

Bit	Field	Type	Reset	Description
2	tpcc_b_int1	R/W	0h	Raw Status of Interrupt from MSS_TPCC_B. Set irrespective if the Interupt is masked or unmasked in MSS_TPCC_C_INTAGG_MASK
1	tpcc_b_int0	R/W	0h	Raw Status of Interrupt from MSS_TPCC_B. Set irrespective if the Interupt is masked or unmasked in MSS_TPCC_C_INTAGG_MASK
0	tpcc_b_intg	R/W	0h	Raw Status of Interrupt from MSS_TPCC_B. Set irrespective if the Interupt is masked or unmasked in MSS_TPCC_C_INTAGG_MASK

6.2.7.105 MSS_BUS_SAFETY_CTRL Register (Offset = 1A0h) [reset = X]

MSS_BUS_SAFETY_CTRL is shown in Figure 6-1020 and described in Table 6-1027.

Return to the Summary Table.

Figure 6-1020. MSS_BUS_SAFETY_CTRL Register

31	30	29	28	27	26	25	24	23	22	21	20	19	18	17	16
RESERVED															
R/W-X															
15	14	13	12	11	10	9	8	7	6	5	4	3	2	1	0
RESERVED														enable	
R/W-X														R/W-0h	

Table 6-1027. MSS_BUS_SAFETY_CTRL Register Field Descriptions

Bit	Field	Type	Reset	Description
31-3	RESERVED	R/W	X	
2-0	enable	R/W	0h	

6.2.7.106 MSS_CR5A_AXI_RD_BUS_SAFETY_CTRL Register (Offset = 1A4h) [reset = X]

MSS_CR5A_AXI_RD_BUS_SAFETY_CTRL is shown in Figure 6-1021 and described in Table 6-1028.

Return to the Summary Table.

Figure 6-1021. MSS_CR5A_AXI_RD_BUS_SAFETY_CTRL Register

31	30	29	28	27	26	25	24
RESERVED							
R/W-X							
23	22	21	20	19	18	17	16
type							
R-0h							
15	14	13	12	11	10	9	8
RESERVED							err_clear
R/W-X							R/W-0h
7	6	5	4	3	2	1	0
RESERVED						enable	
R/W-X						R/W-7h	

Copyright © 2025 Texas Instruments Incorporated

Table 6-1028. MSS_CR5A_AXI_RD_BUS_SAFETY_CTRL Register Field Descriptions

Bit	Field	Type	Reset	Description
31-24	RESERVED	R/W	X	
23-16	type	R	0h	
15-9	RESERVED	R/W	X	
8	err_clear	R/W	0h	
7-3	RESERVED	R/W	X	
2-0	enable	R/W	7h	

6.2.7.107 MSS_CR5A_AXI_RD_BUS_SAFETY_FI Register (Offset = 1A8h) [reset = X]

MSS_CR5A_AXI_RD_BUS_SAFETY_FI is shown in Figure 6-1022 and described in Table 6-1029.

Return to the Summary Table.

Figure 6-1022. MSS_CR5A_AXI_RD_BUS_SAFETY_FI Register

31	30	29	28	27	26	25	24
safe							
R/W-0h							
23	22	21	20	19	18	17	16
main							
R/W-0h							
15	14	13	12	11	10	9	8
data							
R/W-0h							
7	6	5	4	3	2	1	0
RESERVED		ded	sec	global_safe_req	global_main_req	global_safe	global_main
R/W-X		R/W-0h	R/W-0h	R/W-0h	R/W-0h	R/W-0h	R/W-0h

Table 6-1029. MSS_CR5A_AXI_RD_BUS_SAFETY_FI Register Field Descriptions

Bit	Field	Type	Reset	Description
31-24	safe	R/W	0h	
23-16	main	R/W	0h	
15-8	data	R/W	0h	
7-6	RESERVED	R/W	X	
5	ded	R/W	0h	
4	sec	R/W	0h	
3	global_safe_req	R/W	0h	
2	global_main_req	R/W	0h	
1	global_safe	R/W	0h	
0	global_main	R/W	0h	

6.2.7.108 MSS_CR5A_AXI_RD_BUS_SAFETY_ERR Register (Offset = 1ACh) [reset = 0h]

MSS_CR5A_AXI_RD_BUS_SAFETY_ERR is shown in Figure 6-1023 and described in Table 6-1030.

Return to the Summary Table.

Copyright © 2025 Texas Instruments Incorporated

Figure 6-1023. MSS_CR5A_AXI_RD_BUS_SAFETY_ERR Register

31	30	29	28	27	26	25	24	23	22	21	20	19	18	17	16
ded								sec							
R-0h								R-0h							
15	14	13	12	11	10	9	8	7	6	5	4	3	2	1	0
comp_check								comp_err							
R-0h								R-0h							

Table 6-1030. MSS_CR5A_AXI_RD_BUS_SAFETY_ERR Register Field Descriptions

Bit	Field	Type	Reset	Description
31-24	ded	R	0h	
23-16	sec	R	0h	
15-8	comp_check	R	0h	
7-0	comp_err	R	0h	

6.2.7.109 MSS_CR5A_AXI_RD_BUS_SAFETY_ERR_STAT_DATA0 Register (Offset = 1B0h) [reset = X]

MSS_CR5A_AXI_RD_BUS_SAFETY_ERR_STAT_DATA0 is shown in Figure 6-1024 and described in Table 6-1031.

Return to the Summary Table.

Figure 6-1024. MSS_CR5A_AXI_RD_BUS_SAFETY_ERR_STAT_DATA0 Register

31	30	29	28	27	26	25	24	23	22	21	20	19	18	17	16	15	14	13	12	11	10	9	8	7	6	5	4	3	2	1	0
RESERVED																d1								d0							
R-X																R-0h								R-0h							

Table 6-1031. MSS_CR5A_AXI_RD_BUS_SAFETY_ERR_STAT_DATA0 Register Field Descriptions

Bit	Field	Type	Reset	Description
31-16	RESERVED	R	X	
15-8	d1	R	0h	
7-0	d0	R	0h	

6.2.7.110 MSS_CR5A_AXI_RD_BUS_SAFETY_ERR_STAT_CMD Register (Offset = 1B4h) [reset = 0h]

MSS_CR5A_AXI_RD_BUS_SAFETY_ERR_STAT_CMD is shown in Figure 6-1025 and described in Table 6-1032.

Return to the Summary Table.

Figure 6-1025. MSS_CR5A_AXI_RD_BUS_SAFETY_ERR_STAT_CMD Register

31	30	29	28	27	26	25	24	23	22	21	20	19	18	17	16	15	14	13	12	11	10	9	8	7	6	5	4	3	2	1	0
stat																															
R-0h																															

Table 6-1032. MSS_CR5A_AXI_RD_BUS_SAFETY_ERR_STAT_CMD Register Field Descriptions

Bit	Field	Type	Reset	Description
31-0	stat	R	0h	

Copyright © 2025 Texas Instruments Incorporated

6.2.7.111 MSS_CR5A_AXI_RD_BUS_SAFETY_ERR_STAT_READ Register (Offset = 1B8h) [reset = 0h]

MSS_CR5A_AXI_RD_BUS_SAFETY_ERR_STAT_READ is shown in Figure 6-1026 and described in Table 6-1033.

Return to the Summary Table.

Figure 6-1026. MSS_CR5A_AXI_RD_BUS_SAFETY_ERR_STAT_READ Register

31	30	29	28	27	26	25	24	23	22	21	20	19	18	17	16	15	14	13	12	11	10	9	8	7	6	5	4	3	2	1	0
stat																															
R-0h																															

Table 6-1033. MSS_CR5A_AXI_RD_BUS_SAFETY_ERR_STAT_READ Register Field Descriptions

Bit	Field	Type	Reset	Description
31-0	stat	R	0h	

6.2.7.112 MSS_CR5B_AXI_RD_BUS_SAFETY_CTRL Register (Offset = 1BCh) [reset = X]

MSS_CR5B_AXI_RD_BUS_SAFETY_CTRL is shown in Figure 6-1027 and described in Table 6-1034.

Return to the Summary Table.

Figure 6-1027. MSS_CR5B_AXI_RD_BUS_SAFETY_CTRL Register

31	30	29	28	27	26	25	24
RESERVED							
R/W-X							
23	22	21	20	19	18	17	16
type							
R-0h							
15	14	13	12	11	10	9	8
RESERVED							err_clear
R/W-X							R/W-0h
7	6	5	4	3	2	1	0
RESERVED						enable	
R/W-X						R/W-7h	

Table 6-1034. MSS_CR5B_AXI_RD_BUS_SAFETY_CTRL Register Field Descriptions

Bit	Field	Type	Reset	Description
31-24	RESERVED	R/W	X	
23-16	type	R	0h	
15-9	RESERVED	R/W	X	
8	err_clear	R/W	0h	
7-3	RESERVED	R/W	X	
2-0	enable	R/W	7h	

6.2.7.113 MSS_CR5B_AXI_RD_BUS_SAFETY_FI Register (Offset = 1C0h) [reset = X]

MSS_CR5B_AXI_RD_BUS_SAFETY_FI is shown in Figure 6-1028 and described in Table 6-1035.

Return to the Summary Table.

Copyright © 2025 Texas Instruments Incorporated

Figure 6-1028. MSS_CR5B_AXI_RD_BUS_SAFETY_FI Register

31	30	29	28	27	26	25	24
safe							
R/W-0h							
23	22	21	20	19	18	17	16
main							
R/W-0h							
15	14	13	12	11	10	9	8
data							
R/W-0h							
7	6	5	4	3	2	1	0
RESERVED		ded	sec	global_safe_req	global_main_req	global_safe	global_main
R/W-X		R/W-0h	R/W-0h	R/W-0h	R/W-0h	R/W-0h	R/W-0h

Table 6-1035. MSS_CR5B_AXI_RD_BUS_SAFETY_FI Register Field Descriptions

Bit	Field	Type	Reset	Description
31-24	safe	R/W	0h	
23-16	main	R/W	0h	
15-8	data	R/W	0h	
7-6	RESERVED	R/W	X	
5	ded	R/W	0h	
4	sec	R/W	0h	
3	global_safe_req	R/W	0h	
2	global_main_req	R/W	0h	
1	global_safe	R/W	0h	
0	global_main	R/W	0h	

6.2.7.114 MSS_CR5B_AXI_RD_BUS_SAFETY_ERR Register (Offset = 1C4h) [reset = 0h]

MSS_CR5B_AXI_RD_BUS_SAFETY_ERR is shown in Figure 6-1029 and described in Table 6-1036.

Return to the Summary Table.

Figure 6-1029. MSS_CR5B_AXI_RD_BUS_SAFETY_ERR Register

31	30	29	28	27	26	25	24	23	22	21	20	19	18	17	16
ded								sec							
R-0h								R-0h							
15	14	13	12	11	10	9	8	7	6	5	4	3	2	1	0
comp_check								comp_err							
R-0h								R-0h							

Table 6-1036. MSS_CR5B_AXI_RD_BUS_SAFETY_ERR Register Field Descriptions

Bit	Field	Type	Reset	Description
31-24	ded	R	0h	
23-16	sec	R	0h	
15-8	comp_check	R	0h	

Copyright © 2025 Texas Instruments Incorporated

Table 6-1036. MSS_CR5B_AXI_RD_BUS_SAFETY_ERR Register Field Descriptions (continued)

Bit	Field	Type	Reset	Description
7-0	comp_err	R	0h	

6.2.7.115 MSS_CR5B_AXI_RD_BUS_SAFETY_ERR_STAT_DATA0 Register (Offset = 1C8h) [reset = X]

MSS_CR5B_AXI_RD_BUS_SAFETY_ERR_STAT_DATA0 is shown in Figure 6-1030 and described in Table 6-1037.

Return to the Summary Table.

Figure 6-1030. MSS_CR5B_AXI_RD_BUS_SAFETY_ERR_STAT_DATA0 Register

31	30	29	28	27	26	25	24	23	22	21	20	19	18	17	16	15	14	13	12	11	10	9	8	7	6	5	4	3	2	1	0
RESERVED																d1								d0							
R-X																R-0h								R-0h							

Table 6-1037. MSS_CR5B_AXI_RD_BUS_SAFETY_ERR_STAT_DATA0 Register Field Descriptions

Bit	Field	Type	Reset	Description
31-16	RESERVED	R	X	
15-8	d1	R	0h	
7-0	d0	R	0h	

6.2.7.116 MSS_CR5B_AXI_RD_BUS_SAFETY_ERR_STAT_CMD Register (Offset = 1CCh) [reset = 0h]

MSS_CR5B_AXI_RD_BUS_SAFETY_ERR_STAT_CMD is shown in Figure 6-1031 and described in Table 6-1038.

Return to the Summary Table.

Figure 6-1031. MSS_CR5B_AXI_RD_BUS_SAFETY_ERR_STAT_CMD Register

31	30	29	28	27	26	25	24	23	22	21	20	19	18	17	16	15	14	13	12	11	10	9	8	7	6	5	4	3	2	1	0
stat																															
R-0h																															

Table 6-1038. MSS_CR5B_AXI_RD_BUS_SAFETY_ERR_STAT_CMD Register Field Descriptions

Bit	Field	Type	Reset	Description
31-0	stat	R	0h	

6.2.7.117 MSS_CR5B_AXI_RD_BUS_SAFETY_ERR_STAT_READ Register (Offset = 1D0h) [reset = 0h]

MSS_CR5B_AXI_RD_BUS_SAFETY_ERR_STAT_READ is shown in Figure 6-1032 and described in Table 6-1039.

Return to the Summary Table.

Figure 6-1032. MSS_CR5B_AXI_RD_BUS_SAFETY_ERR_STAT_READ Register

31	30	29	28	27	26	25	24	23	22	21	20	19	18	17	16	15	14	13	12	11	10	9	8	7	6	5	4	3	2	1	0
stat																															
R-0h																															

Copyright © 2025 Texas Instruments Incorporated

Table 6-1039. MSS_CR5B_AXI_RD_BUS_SAFETY_ERR_STAT_READ Register Field Descriptions

Bit	Field	Type	Reset	Description
31-0	stat	R	0h	

6.2.7.118 MSS_CR5A_AXI_WR_BUS_SAFETY_CTRL Register (Offset = 1D4h) [reset = X]

MSS_CR5A_AXI_WR_BUS_SAFETY_CTRL is shown in Figure 6-1033 and described in Table 6-1040.

Return to the Summary Table.

Figure 6-1033. MSS_CR5A_AXI_WR_BUS_SAFETY_CTRL Register

31	30	29	28	27	26	25	24
RESERVED							
R/W-X							
23	22	21	20	19	18	17	16
type							
R-0h							
15	14	13	12	11	10	9	8
RESERVED							err_clear
R/W-X							R/W-0h
7	6	5	4	3	2	1	0
RESERVED						enable	
R/W-X						R/W-7h	

Table 6-1040. MSS_CR5A_AXI_WR_BUS_SAFETY_CTRL Register Field Descriptions

Bit	Field	Type	Reset	Description
31-24	RESERVED	R/W	X	
23-16	type	R	0h	
15-9	RESERVED	R/W	X	
8	err_clear	R/W	0h	
7-3	RESERVED	R/W	X	
2-0	enable	R/W	7h	

6.2.7.119 MSS_CR5A_AXI_WR_BUS_SAFETY_FI Register (Offset = 1D8h) [reset = X]

MSS_CR5A_AXI_WR_BUS_SAFETY_FI is shown in Figure 6-1034 and described in Table 6-1041.

Return to the Summary Table.

Figure 6-1034. MSS_CR5A_AXI_WR_BUS_SAFETY_FI Register

31	30	29	28	27	26	25	24
safe							
R/W-0h							
23	22	21	20	19	18	17	16
main							
R/W-0h							
15	14	13	12	11	10	9	8
data							
R/W-0h							

Copyright © 2025 Texas Instruments Incorporated

Figure 6-1034. MSS_CR5A_AXI_WR_BUS_SAFETY_FI Register (continued)

7	6	5	4	3	2	1	0
RESERVED		ded	sec	global_safe_req	global_main_req	global_safe	global_main
R/W-X		R/W-0h	R/W-0h	R/W-0h	R/W-0h	R/W-0h	R/W-0h

Table 6-1041. MSS_CR5A_AXI_WR_BUS_SAFETY_FI Register Field Descriptions

Bit	Field	Type	Reset	Description
31-24	safe	R/W	0h	
23-16	main	R/W	0h	
15-8	data	R/W	0h	
7-6	RESERVED	R/W	X	
5	ded	R/W	0h	
4	sec	R/W	0h	
3	global_safe_req	R/W	0h	
2	global_main_req	R/W	0h	
1	global_safe	R/W	0h	
0	global_main	R/W	0h	

6.2.7.120 MSS_CR5A_AXI_WR_BUS_SAFETY_ERR Register (Offset = 1DCh) [reset = 0h]

MSS_CR5A_AXI_WR_BUS_SAFETY_ERR is shown in Figure 6-1035 and described in Table 6-1042.

Return to the Summary Table.

Figure 6-1035. MSS_CR5A_AXI_WR_BUS_SAFETY_ERR Register

31	30	29	28	27	26	25	24	23	22	21	20	19	18	17	16
ded								sec							
R-0h								R-0h							
15	14	13	12	11	10	9	8	7	6	5	4	3	2	1	0
comp_check								comp_err							
R-0h								R-0h							

Table 6-1042. MSS_CR5A_AXI_WR_BUS_SAFETY_ERR Register Field Descriptions

Bit	Field	Type	Reset	Description
31-24	ded	R	0h	
23-16	sec	R	0h	
15-8	comp_check	R	0h	
7-0	comp_err	R	0h	

6.2.7.121 MSS_CR5A_AXI_WR_BUS_SAFETY_ERR_STAT_DATA0 Register (Offset = 1E0h) [reset = X]

MSS_CR5A_AXI_WR_BUS_SAFETY_ERR_STAT_DATA0 is shown in Figure 6-1036 and described in Table 6-1043.

Return to the Summary Table.

Figure 6-1036. MSS_CR5A_AXI_WR_BUS_SAFETY_ERR_STAT_DATA0 Register

31	30	29	28	27	26	25	24	23	22	21	20	19	18	17	16	15	14	13	12	11	10	9	8	7	6	5	4	3	2	1	0
RESERVED																d1								d0							
R-X																R-0h								R-0h							

Copyright © 2025 Texas Instruments Incorporated

Figure 6-1036. MSS_CR5A_AXI_WR_BUS_SAFETY_ERR_STAT_DATA0 Register (continued)

Table 6-1043. MSS_CR5A_AXI_WR_BUS_SAFETY_ERR_STAT_DATA0 Register Field Descriptions

Bit	Field	Type	Reset	Description
31-16	RESERVED	R	X	
15-8	d1	R	0h	
7-0	d0	R	0h	

6.2.7.122 MSS_CR5A_AXI_WR_BUS_SAFETY_ERR_STAT_CMD Register (Offset = 1E4h) [reset = 0h]

MSS_CR5A_AXI_WR_BUS_SAFETY_ERR_STAT_CMD is shown in Figure 6-1037 and described in Table 6-1044.

Return to the Summary Table.

Figure 6-1037. MSS_CR5A_AXI_WR_BUS_SAFETY_ERR_STAT_CMD Register

31	30	29	28	27	26	25	24	23	22	21	20	19	18	17	16	15	14	13	12	11	10	9	8	7	6	5	4	3	2	1	0
stat																															
R-0h																															

Table 6-1044. MSS_CR5A_AXI_WR_BUS_SAFETY_ERR_STAT_CMD Register Field Descriptions

Bit	Field	Type	Reset	Description
31-0	stat	R	0h	

6.2.7.123 MSS_CR5A_AXI_WR_BUS_SAFETY_ERR_STAT_WRITE Register (Offset = 1E8h) [reset = 0h]

MSS_CR5A_AXI_WR_BUS_SAFETY_ERR_STAT_WRITE is shown in Figure 6-1038 and described in Table 6-1045.

Return to the Summary Table.

Figure 6-1038. MSS_CR5A_AXI_WR_BUS_SAFETY_ERR_STAT_WRITE Register

31	30	29	28	27	26	25	24	23	22	21	20	19	18	17	16	15	14	13	12	11	10	9	8	7	6	5	4	3	2	1	0
stat																															
R-0h																															

Table 6-1045. MSS_CR5A_AXI_WR_BUS_SAFETY_ERR_STAT_WRITE Register Field Descriptions

Bit	Field	Type	Reset	Description
31-0	stat	R	0h	

6.2.7.124 MSS_CR5A_AXI_WR_BUS_SAFETY_ERR_STAT_WRITERESP Register (Offset = 1ECh) [reset = 0h]

MSS_CR5A_AXI_WR_BUS_SAFETY_ERR_STAT_WRITERESP is shown in Figure 6-1039 and described in Table 6-1046.

Return to the Summary Table.

Figure 6-1039. MSS_CR5A_AXI_WR_BUS_SAFETY_ERR_STAT_WRITERESP Register

31	30	29	28	27	26	25	24	23	22	21	20	19	18	17	16	15	14	13	12	11	10	9	8	7	6	5	4	3	2	1	0
stat																															
R-0h																															

Copyright © 2025 Texas Instruments Incorporated

Table 6-1046. MSS_CR5A_AXI_WR_BUS_SAFETY_ERR_STAT_WRITERESP Register Field Descriptions

Bit	Field	Type	Reset	Description
31-0	stat	R	0h	

6.2.7.125 MSS_CR5B_AXI_WR_BUS_SAFETY_CTRL Register (Offset = 1F0h) [reset = X]

MSS_CR5B_AXI_WR_BUS_SAFETY_CTRL is shown in Figure 6-1040 and described in Table 6-1047.

Return to the Summary Table.

Figure 6-1040. MSS_CR5B_AXI_WR_BUS_SAFETY_CTRL Register

31	30	29	28	27	26	25	24
RESERVED							
R/W-X							
23	22	21	20	19	18	17	16
type							
R-0h							
15	14	13	12	11	10	9	8
RESERVED							err_clear
R/W-X							R/W-0h
7	6	5	4	3	2	1	0
RESERVED						enable	
R/W-X						R/W-7h	

Table 6-1047. MSS_CR5B_AXI_WR_BUS_SAFETY_CTRL Register Field Descriptions

Bit	Field	Type	Reset	Description
31-24	RESERVED	R/W	X	
23-16	type	R	0h	
15-9	RESERVED	R/W	X	
8	err_clear	R/W	0h	
7-3	RESERVED	R/W	X	
2-0	enable	R/W	7h	

6.2.7.126 MSS_CR5B_AXI_WR_BUS_SAFETY_FI Register (Offset = 1F4h) [reset = X]

MSS_CR5B_AXI_WR_BUS_SAFETY_FI is shown in Figure 6-1041 and described in Table 6-1048.

Return to the Summary Table.

Figure 6-1041. MSS_CR5B_AXI_WR_BUS_SAFETY_FI Register

31	30	29	28	27	26	25	24
safe							
R/W-0h							
23	22	21	20	19	18	17	16
main							
R/W-0h							
15	14	13	12	11	10	9	8
data							
R/W-0h							

Copyright © 2025 Texas Instruments Incorporated

Figure 6-1041. MSS_CR5B_AXI_WR_BUS_SAFETY_FI Register (continued)

7	6	5	4	3	2	1	0
RESERVED		ded	sec	global_safe_req	global_main_req	global_safe	global_main
R/W-X		R/W-0h	R/W-0h	R/W-0h	R/W-0h	R/W-0h	R/W-0h

Table 6-1048. MSS_CR5B_AXI_WR_BUS_SAFETY_FI Register Field Descriptions

Bit	Field	Type	Reset	Description
31-24	safe	R/W	0h	
23-16	main	R/W	0h	
15-8	data	R/W	0h	
7-6	RESERVED	R/W	X	
5	ded	R/W	0h	
4	sec	R/W	0h	
3	global_safe_req	R/W	0h	
2	global_main_req	R/W	0h	
1	global_safe	R/W	0h	
0	global_main	R/W	0h	

6.2.7.127 MSS_CR5B_AXI_WR_BUS_SAFETY_ERR Register (Offset = 1F8h) [reset = 0h]

MSS_CR5B_AXI_WR_BUS_SAFETY_ERR is shown in Figure 6-1042 and described in Table 6-1049.

Return to the Summary Table.

Figure 6-1042. MSS_CR5B_AXI_WR_BUS_SAFETY_ERR Register

31	30	29	28	27	26	25	24	23	22	21	20	19	18	17	16
ded								sec							
R-0h								R-0h							
15	14	13	12	11	10	9	8	7	6	5	4	3	2	1	0
comp_check								comp_err							
R-0h								R-0h							

Table 6-1049. MSS_CR5B_AXI_WR_BUS_SAFETY_ERR Register Field Descriptions

Bit	Field	Type	Reset	Description
31-24	ded	R	0h	
23-16	sec	R	0h	
15-8	comp_check	R	0h	
7-0	comp_err	R	0h	

6.2.7.128 MSS_CR5B_AXI_WR_BUS_SAFETY_ERR_STAT_DATA0 Register (Offset = 1FCh) [reset = X]

MSS_CR5B_AXI_WR_BUS_SAFETY_ERR_STAT_DATA0 is shown in Figure 6-1043 and described in Table 6-1050.

Return to the Summary Table.

Figure 6-1043. MSS_CR5B_AXI_WR_BUS_SAFETY_ERR_STAT_DATA0 Register

31	30	29	28	27	26	25	24	23	22	21	20	19	18	17	16	15	14	13	12	11	10	9	8	7	6	5	4	3	2	1	0
RESERVED																d1								d0							
R-X																R-0h								R-0h							

Copyright © 2025 Texas Instruments Incorporated

Figure 6-1043. MSS_CR5B_AXI_WR_BUS_SAFETY_ERR_STAT_DATA0 Register (continued)

Table 6-1050. MSS_CR5B_AXI_WR_BUS_SAFETY_ERR_STAT_DATA0 Register Field Descriptions

Bit	Field	Type	Reset	Description
31-16	RESERVED	R	X	
15-8	d1	R	0h	
7-0	d0	R	0h	

6.2.7.129 MSS_CR5B_AXI_WR_BUS_SAFETY_ERR_STAT_CMD Register (Offset = 200h) [reset = 0h]

MSS_CR5B_AXI_WR_BUS_SAFETY_ERR_STAT_CMD is shown in Figure 6-1044 and described in Table 6-1051.

Return to the Summary Table.

Figure 6-1044. MSS_CR5B_AXI_WR_BUS_SAFETY_ERR_STAT_CMD Register

31	30	29	28	27	26	25	24	23	22	21	20	19	18	17	16	15	14	13	12	11	10	9	8	7	6	5	4	3	2	1	0
stat																															
R-0h																															

Table 6-1051. MSS_CR5B_AXI_WR_BUS_SAFETY_ERR_STAT_CMD Register Field Descriptions

Bit	Field	Type	Reset	Description
31-0	stat	R	0h	

6.2.7.130 MSS_CR5B_AXI_WR_BUS_SAFETY_ERR_STAT_WRITE Register (Offset = 204h) [reset = 0h]

MSS_CR5B_AXI_WR_BUS_SAFETY_ERR_STAT_WRITE is shown in Figure 6-1045 and described in Table 6-1052.

Return to the Summary Table.

Figure 6-1045. MSS_CR5B_AXI_WR_BUS_SAFETY_ERR_STAT_WRITE Register

31	30	29	28	27	26	25	24	23	22	21	20	19	18	17	16	15	14	13	12	11	10	9	8	7	6	5	4	3	2	1	0
stat																															
R-0h																															

Table 6-1052. MSS_CR5B_AXI_WR_BUS_SAFETY_ERR_STAT_WRITE Register Field Descriptions

Bit	Field	Type	Reset	Description
31-0	stat	R	0h	

6.2.7.131 MSS_CR5B_AXI_WR_BUS_SAFETY_ERR_STAT_WRITERESP Register (Offset = 208h) [reset = 0h]

MSS_CR5B_AXI_WR_BUS_SAFETY_ERR_STAT_WRITERESP is shown in Figure 6-1046 and described in Table 6-1053.

Return to the Summary Table.

Figure 6-1046. MSS_CR5B_AXI_WR_BUS_SAFETY_ERR_STAT_WRITERESP Register

31	30	29	28	27	26	25	24	23	22	21	20	19	18	17	16	15	14	13	12	11	10	9	8	7	6	5	4	3	2	1	0
stat																															
R-0h																															

Copyright © 2025 Texas Instruments Incorporated

Table 6-1053. MSS_CR5B_AXI_WR_BUS_SAFETY_ERR_STAT_WRITERESP Register Field Descriptions

Bit	Field	Type	Reset	Description
31-0	stat	R	0h	

6.2.7.132 MSS_CR5A_AXI_S_BUS_SAFETY_CTRL Register (Offset = 20Ch) [reset = X]

MSS_CR5A_AXI_S_BUS_SAFETY_CTRL is shown in Figure 6-1047 and described in Table 6-1054.

Return to the Summary Table.

Figure 6-1047. MSS_CR5A_AXI_S_BUS_SAFETY_CTRL Register

31	30	29	28	27	26	25	24
RESERVED							
R/W-X							
23	22	21	20	19	18	17	16
type							
R-0h							
15	14	13	12	11	10	9	8
RESERVED							err_clear
R/W-X							R/W-0h
7	6	5	4	3	2	1	0
RESERVED						enable	
R/W-X						R/W-7h	

Table 6-1054. MSS_CR5A_AXI_S_BUS_SAFETY_CTRL Register Field Descriptions

Bit	Field	Type	Reset	Description
31-24	RESERVED	R/W	X	
23-16	type	R	0h	
15-9	RESERVED	R/W	X	
8	err_clear	R/W	0h	
7-3	RESERVED	R/W	X	
2-0	enable	R/W	7h	

6.2.7.133 MSS_CR5A_AXI_S_BUS_SAFETY_FI Register (Offset = 210h) [reset = X]

MSS_CR5A_AXI_S_BUS_SAFETY_FI is shown in Figure 6-1048 and described in Table 6-1055.

Return to the Summary Table.

Figure 6-1048. MSS_CR5A_AXI_S_BUS_SAFETY_FI Register

31	30	29	28	27	26	25	24
safe							
R/W-0h							
23	22	21	20	19	18	17	16
main							
R/W-0h							
15	14	13	12	11	10	9	8
data							
R/W-0h							

Copyright © 2025 Texas Instruments Incorporated

Figure 6-1048. MSS_CR5A_AXI_S_BUS_SAFETY_FI Register (continued)

7	6	5	4	3	2	1	0
RESERVED		ded	sec	global_safe_req	global_main_req	global_safe	global_main
R/W-X		R/W-0h	R/W-0h	R/W-0h	R/W-0h	R/W-0h	R/W-0h

Table 6-1055. MSS_CR5A_AXI_S_BUS_SAFETY_FI Register Field Descriptions

Bit	Field	Type	Reset	Description
31-24	safe	R/W	0h	
23-16	main	R/W	0h	
15-8	data	R/W	0h	
7-6	RESERVED	R/W	X	
5	ded	R/W	0h	
4	sec	R/W	0h	
3	global_safe_req	R/W	0h	
2	global_main_req	R/W	0h	
1	global_safe	R/W	0h	
0	global_main	R/W	0h	

6.2.7.134 MSS_CR5A_AXI_S_BUS_SAFETY_ERR Register (Offset = 214h) [reset = 0h]

MSS_CR5A_AXI_S_BUS_SAFETY_ERR is shown in Figure 6-1049 and described in Table 6-1056.

Return to the Summary Table.

Figure 6-1049. MSS_CR5A_AXI_S_BUS_SAFETY_ERR Register

31	30	29	28	27	26	25	24	23	22	21	20	19	18	17	16
ded								sec							
R-0h								R-0h							
15	14	13	12	11	10	9	8	7	6	5	4	3	2	1	0
comp_check								comp_err							
R-0h								R-0h							

Table 6-1056. MSS_CR5A_AXI_S_BUS_SAFETY_ERR Register Field Descriptions

Bit	Field	Type	Reset	Description
31-24	ded	R	0h	
23-16	sec	R	0h	
15-8	comp_check	R	0h	
7-0	comp_err	R	0h	

6.2.7.135 MSS_CR5A_AXI_S_BUS_SAFETY_ERR_STAT_DATA0 Register (Offset = 218h) [reset = X]

MSS_CR5A_AXI_S_BUS_SAFETY_ERR_STAT_DATA0 is shown in Figure 6-1050 and described in Table 6-1057.

Return to the Summary Table.

Figure 6-1050. MSS_CR5A_AXI_S_BUS_SAFETY_ERR_STAT_DATA0 Register

31	30	29	28	27	26	25	24	23	22	21	20	19	18	17	16	15	14	13	12	11	10	9	8	7	6	5	4	3	2	1	0
RESERVED																d1								d0							
R-X																R-0h								R-0h							

Copyright © 2025 Texas Instruments Incorporated

Figure 6-1050. MSS_CR5A_AXI_S_BUS_SAFETY_ERR_STAT_DATA0 Register (continued)

Table 6-1057. MSS_CR5A_AXI_S_BUS_SAFETY_ERR_STAT_DATA0 Register Field Descriptions

Bit	Field	Type	Reset	Description
31-16	RESERVED	R	X	
15-8	d1	R	0h	
7-0	d0	R	0h	

6.2.7.136 MSS_CR5A_AXI_S_BUS_SAFETY_ERR_STAT_CMD Register (Offset = 21Ch) [reset = 0h]

MSS_CR5A_AXI_S_BUS_SAFETY_ERR_STAT_CMD is shown in Figure 6-1051 and described in Table 6-1058.

Return to the Summary Table.

Figure 6-1051. MSS_CR5A_AXI_S_BUS_SAFETY_ERR_STAT_CMD Register

31	30	29	28	27	26	25	24	23	22	21	20	19	18	17	16	15	14	13	12	11	10	9	8	7	6	5	4	3	2	1	0
stat																															
R-0h																															

Table 6-1058. MSS_CR5A_AXI_S_BUS_SAFETY_ERR_STAT_CMD Register Field Descriptions

Bit	Field	Type	Reset	Description
31-0	stat	R	0h	

6.2.7.137 MSS_CR5A_AXI_S_BUS_SAFETY_ERR_STAT_WRITE Register (Offset = 220h) [reset = 0h]

MSS_CR5A_AXI_S_BUS_SAFETY_ERR_STAT_WRITE is shown in Figure 6-1052 and described in Table 6-1059.

Return to the Summary Table.

Figure 6-1052. MSS_CR5A_AXI_S_BUS_SAFETY_ERR_STAT_WRITE Register

31	30	29	28	27	26	25	24	23	22	21	20	19	18	17	16	15	14	13	12	11	10	9	8	7	6	5	4	3	2	1	0
stat																															
R-0h																															

Table 6-1059. MSS_CR5A_AXI_S_BUS_SAFETY_ERR_STAT_WRITE Register Field Descriptions

Bit	Field	Type	Reset	Description
31-0	stat	R	0h	

6.2.7.138 MSS_CR5A_AXI_S_BUS_SAFETY_ERR_STAT_READ Register (Offset = 224h) [reset = 0h]

MSS_CR5A_AXI_S_BUS_SAFETY_ERR_STAT_READ is shown in Figure 6-1053 and described in Table 6-1060.

Return to the Summary Table.

Figure 6-1053. MSS_CR5A_AXI_S_BUS_SAFETY_ERR_STAT_READ Register

31	30	29	28	27	26	25	24	23	22	21	20	19	18	17	16	15	14	13	12	11	10	9	8	7	6	5	4	3	2	1	0
stat																															
R-0h																															

Copyright © 2025 Texas Instruments Incorporated

Table 6-1060. MSS_CR5A_AXI_S_BUS_SAFETY_ERR_STAT_READ Register Field Descriptions

Bit	Field	Type	Reset	Description
31-0	stat	R	0h	

6.2.7.139 MSS_CR5A_AXI_S_BUS_SAFETY_ERR_STAT_WRITERESP Register (Offset = 228h) [reset = 0h]

MSS_CR5A_AXI_S_BUS_SAFETY_ERR_STAT_WRITERESP is shown in Figure 6-1054 and described in Table 6-1061.

Return to the Summary Table.

Figure 6-1054. MSS_CR5A_AXI_S_BUS_SAFETY_ERR_STAT_WRITERESP Register

31	30	29	28	27	26	25	24	23	22	21	20	19	18	17	16	15	14	13	12	11	10	9	8	7	6	5	4	3	2	1	0
stat																															
R-0h																															

Table 6-1061. MSS_CR5A_AXI_S_BUS_SAFETY_ERR_STAT_WRITERESP Register Field Descriptions

Bit	Field	Type	Reset	Description
31-0	stat	R	0h	

6.2.7.140 MSS_CR5B_AXI_S_BUS_SAFETY_CTRL Register (Offset = 22Ch) [reset = X]

MSS_CR5B_AXI_S_BUS_SAFETY_CTRL is shown in Figure 6-1055 and described in Table 6-1062.

Return to the Summary Table.

Figure 6-1055. MSS_CR5B_AXI_S_BUS_SAFETY_CTRL Register

31	30	29	28	27	26	25	24
RESERVED							
R/W-X							
23	22	21	20	19	18	17	16
type							
R-0h							
15	14	13	12	11	10	9	8
RESERVED							err_clear
R/W-X							R/W-0h
7	6	5	4	3	2	1	0
RESERVED						enable	
R/W-X						R/W-7h	

Table 6-1062. MSS_CR5B_AXI_S_BUS_SAFETY_CTRL Register Field Descriptions

Bit	Field	Type	Reset	Description
31-24	RESERVED	R/W	X	
23-16	type	R	0h	
15-9	RESERVED	R/W	X	
8	err_clear	R/W	0h	
7-3	RESERVED	R/W	X	
2-0	enable	R/W	7h	

Copyright © 2025 Texas Instruments Incorporated

6.2.7.141 MSS_CR5B_AXI_S_BUS_SAFETY_FI Register (Offset = 230h) [reset = X]

MSS_CR5B_AXI_S_BUS_SAFETY_FI is shown in Figure 6-1056 and described in Table 6-1063.

Return to the Summary Table.

Figure 6-1056. MSS_CR5B_AXI_S_BUS_SAFETY_FI Register

31	30	29	28	27	26	25	24
safe							
R/W-0h							
23	22	21	20	19	18	17	16
main							
R/W-0h							
15	14	13	12	11	10	9	8
data							
R/W-0h							
7	6	5	4	3	2	1	0
RESERVED		ded	sec	global_safe_req	global_main_req	global_safe	global_main
R/W-X		R/W-0h	R/W-0h	R/W-0h	R/W-0h	R/W-0h	R/W-0h

Table 6-1063. MSS_CR5B_AXI_S_BUS_SAFETY_FI Register Field Descriptions

Bit	Field	Type	Reset	Description
31-24	safe	R/W	0h	
23-16	main	R/W	0h	
15-8	data	R/W	0h	
7-6	RESERVED	R/W	X	
5	ded	R/W	0h	
4	sec	R/W	0h	
3	global_safe_req	R/W	0h	
2	global_main_req	R/W	0h	
1	global_safe	R/W	0h	
0	global_main	R/W	0h	

6.2.7.142 MSS_CR5B_AXI_S_BUS_SAFETY_ERR Register (Offset = 234h) [reset = 0h]

MSS_CR5B_AXI_S_BUS_SAFETY_ERR is shown in Figure 6-1057 and described in Table 6-1064.

Return to the Summary Table.

Figure 6-1057. MSS_CR5B_AXI_S_BUS_SAFETY_ERR Register

31	30	29	28	27	26	25	24	23	22	21	20	19	18	17	16
ded								sec							
R-0h								R-0h							
15	14	13	12	11	10	9	8	7	6	5	4	3	2	1	0
comp_check								comp_err							
R-0h								R-0h							

Copyright © 2025 Texas Instruments Incorporated

Table 6-1064. MSS_CR5B_AXI_S_BUS_SAFETY_ERR Register Field Descriptions

Bit	Field	Type	Reset	Description
31-24	ded	R	0h	
23-16	sec	R	0h	
15-8	comp_check	R	0h	
7-0	comp_err	R	0h	

6.2.7.143 MSS_CR5B_AXI_S_BUS_SAFETY_ERR_STAT_DATA0 Register (Offset = 238h) [reset = X]

MSS_CR5B_AXI_S_BUS_SAFETY_ERR_STAT_DATA0 is shown in Figure 6-1058 and described in Table 6-1065.

Return to the Summary Table.

Figure 6-1058. MSS_CR5B_AXI_S_BUS_SAFETY_ERR_STAT_DATA0 Register

31	30	29	28	27	26	25	24	23	22	21	20	19	18	17	16	15	14	13	12	11	10	9	8	7	6	5	4	3	2	1	0
RESERVED																d1								d0							
R-X																R-0h								R-0h							

Table 6-1065. MSS_CR5B_AXI_S_BUS_SAFETY_ERR_STAT_DATA0 Register Field Descriptions

Bit	Field	Type	Reset	Description
31-16	RESERVED	R	X	
15-8	d1	R	0h	
7-0	d0	R	0h	

6.2.7.144 MSS_CR5B_AXI_S_BUS_SAFETY_ERR_STAT_CMD Register (Offset = 23Ch) [reset = 0h]

MSS_CR5B_AXI_S_BUS_SAFETY_ERR_STAT_CMD is shown in Figure 6-1059 and described in Table 6-1066.

Return to the Summary Table.

Figure 6-1059. MSS_CR5B_AXI_S_BUS_SAFETY_ERR_STAT_CMD Register

31	30	29	28	27	26	25	24	23	22	21	20	19	18	17	16	15	14	13	12	11	10	9	8	7	6	5	4	3	2	1	0
stat																															
R-0h																															

Table 6-1066. MSS_CR5B_AXI_S_BUS_SAFETY_ERR_STAT_CMD Register Field Descriptions

Bit	Field	Type	Reset	Description
31-0	stat	R	0h	

6.2.7.145 MSS_CR5B_AXI_S_BUS_SAFETY_ERR_STAT_WRITE Register (Offset = 240h) [reset = 0h]

MSS_CR5B_AXI_S_BUS_SAFETY_ERR_STAT_WRITE is shown in Figure 6-1060 and described in Table 6-1067.

Return to the Summary Table.

Figure 6-1060. MSS_CR5B_AXI_S_BUS_SAFETY_ERR_STAT_WRITE Register

31	30	29	28	27	26	25	24	23	22	21	20	19	18	17	16	15	14	13	12	11	10	9	8	7	6	5	4	3	2	1	0
stat																															
R-0h																															

Copyright © 2025 Texas Instruments Incorporated

Figure 6-1060. MSS_CR5B_AXI_S_BUS_SAFETY_ERR_STAT_WRITE Register (continued)

Table 6-1067. MSS_CR5B_AXI_S_BUS_SAFETY_ERR_STAT_WRITE Register Field Descriptions

Bit	Field	Type	Reset	Description
31-0	stat	R	0h	

6.2.7.146 MSS_CR5B_AXI_S_BUS_SAFETY_ERR_STAT_READ Register (Offset = 244h) [reset = 0h]

MSS_CR5B_AXI_S_BUS_SAFETY_ERR_STAT_READ is shown in Figure 6-1061 and described in Table 6-1068.

Return to the Summary Table.

Figure 6-1061. MSS_CR5B_AXI_S_BUS_SAFETY_ERR_STAT_READ Register

31	30	29	28	27	26	25	24	23	22	21	20	19	18	17	16	15	14	13	12	11	10	9	8	7	6	5	4	3	2	1	0
stat																															
R-0h																															

Table 6-1068. MSS_CR5B_AXI_S_BUS_SAFETY_ERR_STAT_READ Register Field Descriptions

Bit	Field	Type	Reset	Description
31-0	stat	R	0h	

6.2.7.147 MSS_CR5B_AXI_S_BUS_SAFETY_ERR_STAT_WRITERESP Register (Offset = 248h) [reset = 0h]

MSS_CR5B_AXI_S_BUS_SAFETY_ERR_STAT_WRITERESP is shown in Figure 6-1062 and described in Table 6-1069.

Return to the Summary Table.

Figure 6-1062. MSS_CR5B_AXI_S_BUS_SAFETY_ERR_STAT_WRITERESP Register

31	30	29	28	27	26	25	24	23	22	21	20	19	18	17	16	15	14	13	12	11	10	9	8	7	6	5	4	3	2	1	0
stat																															
R-0h																															

Table 6-1069. MSS_CR5B_AXI_S_BUS_SAFETY_ERR_STAT_WRITERESP Register Field Descriptions

Bit	Field	Type	Reset	Description
31-0	stat	R	0h	

6.2.7.148 MSS_TPTC_A0_RD_BUS_SAFETY_CTRL Register (Offset = 24Ch) [reset = X]

MSS_TPTC_A0_RD_BUS_SAFETY_CTRL is shown in Figure 6-1063 and described in Table 6-1070.

Return to the Summary Table.

Figure 6-1063. MSS_TPTC_A0_RD_BUS_SAFETY_CTRL Register

31	30	29	28	27	26	25	24
RESERVED							
R/W-X							
23	22	21	20	19	18	17	16
type							
R-0h							

Copyright © 2025 Texas Instruments Incorporated

Figure 6-1063. MSS_TPTC_A0_RD_BUS_SAFETY_CTRL Register (continued)

15	14	13	12	11	10	9	8
RESERVED							err_clear
R/W-X							R/W-0h
7	6	5	4	3	2	1	0
RESERVED						enable	
R/W-X						R/W-7h	

Table 6-1070. MSS_TPTC_A0_RD_BUS_SAFETY_CTRL Register Field Descriptions

Bit	Field	Type	Reset	Description
31-24	RESERVED	R/W	X	
23-16	type	R	0h	
15-9	RESERVED	R/W	X	
8	err_clear	R/W	0h	
7-3	RESERVED	R/W	X	
2-0	enable	R/W	7h	

6.2.7.149 MSS_TPTC_A0_RD_BUS_SAFETY_FI Register (Offset = 250h) [reset = X]

MSS_TPTC_A0_RD_BUS_SAFETY_FI is shown in Figure 6-1064 and described in Table 6-1071.

Return to the Summary Table.

Figure 6-1064. MSS_TPTC_A0_RD_BUS_SAFETY_FI Register

31	30	29	28	27	26	25	24
safe							
R/W-0h							
23	22	21	20	19	18	17	16
main							
R/W-0h							
15	14	13	12	11	10	9	8
data							
R/W-0h							
7	6	5	4	3	2	1	0
RESERVED		ded	sec	global_safe_req	global_main_req	global_safe	global_main
R/W-X		R/W-0h	R/W-0h	R/W-0h	R/W-0h	R/W-0h	R/W-0h

Table 6-1071. MSS_TPTC_A0_RD_BUS_SAFETY_FI Register Field Descriptions

Bit	Field	Type	Reset	Description
31-24	safe	R/W	0h	
23-16	main	R/W	0h	
15-8	data	R/W	0h	
7-6	RESERVED	R/W	X	
5	ded	R/W	0h	
4	sec	R/W	0h	
3	global_safe_req	R/W	0h	
2	global_main_req	R/W	0h	

Copyright © 2025 Texas Instruments Incorporated

Table 6-1071. MSS_TPTC_A0_RD_BUS_SAFETY_FI Register Field Descriptions (continued)

Bit	Field	Type	Reset	Description
1	global_safe	R/W	0h	
0	global_main	R/W	0h	

6.2.7.150 MSS_TPTC_A0_RD_BUS_SAFETY_ERR Register (Offset = 254h) [reset = 0h]

MSS_TPTC_A0_RD_BUS_SAFETY_ERR is shown in Figure 6-1065 and described in Table 6-1072.

Return to the Summary Table.

Figure 6-1065. MSS_TPTC_A0_RD_BUS_SAFETY_ERR Register

31	30	29	28	27	26	25	24	23	22	21	20	19	18	17	16
ded								sec							
R-0h								R-0h							
15	14	13	12	11	10	9	8	7	6	5	4	3	2	1	0
comp_check								comp_err							
R-0h								R-0h							

Table 6-1072. MSS_TPTC_A0_RD_BUS_SAFETY_ERR Register Field Descriptions

Bit	Field	Type	Reset	Description
31-24	ded	R	0h	
23-16	sec	R	0h	
15-8	comp_check	R	0h	
7-0	comp_err	R	0h	

6.2.7.151 MSS_TPTC_A0_RD_BUS_SAFETY_ERR_STAT_DATA0 Register (Offset = 258h) [reset = X]

MSS_TPTC_A0_RD_BUS_SAFETY_ERR_STAT_DATA0 is shown in Figure 6-1066 and described in Table 6-1073.

Return to the Summary Table.

Figure 6-1066. MSS_TPTC_A0_RD_BUS_SAFETY_ERR_STAT_DATA0 Register

31	30	29	28	27	26	25	24	23	22	21	20	19	18	17	16	15	14	13	12	11	10	9	8	7	6	5	4	3	2	1	0
RESERVED																d1								d0							
R-X																R-0h								R-0h							

Table 6-1073. MSS_TPTC_A0_RD_BUS_SAFETY_ERR_STAT_DATA0 Register Field Descriptions

Bit	Field	Type	Reset	Description
31-16	RESERVED	R	X	
15-8	d1	R	0h	
7-0	d0	R	0h	

6.2.7.152 MSS_TPTC_A0_RD_BUS_SAFETY_ERR_STAT_CMD Register (Offset = 25Ch) [reset = 0h]

MSS_TPTC_A0_RD_BUS_SAFETY_ERR_STAT_CMD is shown in Figure 6-1067 and described in Table 6-1074.

Return to the Summary Table.

Copyright © 2025 Texas Instruments Incorporated

Figure 6-1067. MSS_TPTC_A0_RD_BUS_SAFETY_ERR_STAT_CMD Register

31	30	29	28	27	26	25	24	23	22	21	20	19	18	17	16	15	14	13	12	11	10	9	8	7	6	5	4	3	2	1	0
stat																															
R-0h																															

Table 6-1074. MSS_TPTC_A0_RD_BUS_SAFETY_ERR_STAT_CMD Register Field Descriptions

Bit	Field	Type	Reset	Description
31-0	stat	R	0h	

6.2.7.153 MSS_TPTC_A0_RD_BUS_SAFETY_ERR_STAT_READ Register (Offset = 260h) [reset = 0h]

MSS_TPTC_A0_RD_BUS_SAFETY_ERR_STAT_READ is shown in Figure 6-1068 and described in Table 6-1075.

Return to the Summary Table.

Figure 6-1068. MSS_TPTC_A0_RD_BUS_SAFETY_ERR_STAT_READ Register

31	30	29	28	27	26	25	24	23	22	21	20	19	18	17	16	15	14	13	12	11	10	9	8	7	6	5	4	3	2	1	0
stat																															
R-0h																															

Table 6-1075. MSS_TPTC_A0_RD_BUS_SAFETY_ERR_STAT_READ Register Field Descriptions

Bit	Field	Type	Reset	Description
31-0	stat	R	0h	

6.2.7.154 MSS_TPTC_A1_RD_BUS_SAFETY_CTRL Register (Offset = 264h) [reset = X]

MSS_TPTC_A1_RD_BUS_SAFETY_CTRL is shown in Figure 6-1069 and described in Table 6-1076.

Return to the Summary Table.

Figure 6-1069. MSS_TPTC_A1_RD_BUS_SAFETY_CTRL Register

31	30	29	28	27	26	25	24
RESERVED							
R/W-X							
23	22	21	20	19	18	17	16
type							
R-0h							
15	14	13	12	11	10	9	8
RESERVED							err_clear
R/W-X							R/W-0h
7	6	5	4	3	2	1	0
RESERVED						enable	
R/W-X						R/W-7h	

Table 6-1076. MSS_TPTC_A1_RD_BUS_SAFETY_CTRL Register Field Descriptions

Bit	Field	Type	Reset	Description
31-24	RESERVED	R/W	X	
23-16	type	R	0h	
15-9	RESERVED	R/W	X	

Copyright © 2025 Texas Instruments Incorporated

Table 6-1076. MSS_TPTC_A1_RD_BUS_SAFETY_CTRL Register Field Descriptions (continued)

Bit	Field	Type	Reset	Description
8	err_clear	R/W	0h	
7-3	RESERVED	R/W	X	
2-0	enable	R/W	7h	

6.2.7.155 MSS_TPTC_A1_RD_BUS_SAFETY_FI Register (Offset = 268h) [reset = X]

MSS_TPTC_A1_RD_BUS_SAFETY_FI is shown in Figure 6-1070 and described in Table 6-1077.

Return to the Summary Table.

Figure 6-1070. MSS_TPTC_A1_RD_BUS_SAFETY_FI Register

31	30	29	28	27	26	25	24
safe							
R/W-0h							
23	22	21	20	19	18	17	16
main							
R/W-0h							
15	14	13	12	11	10	9	8
data							
R/W-0h							
7	6	5	4	3	2	1	0
RESERVED		ded	sec	global_safe_req	global_main_req	global_safe	global_main
R/W-X		R/W-0h	R/W-0h	R/W-0h	R/W-0h	R/W-0h	R/W-0h

Table 6-1077. MSS_TPTC_A1_RD_BUS_SAFETY_FI Register Field Descriptions

Bit	Field	Type	Reset	Description
31-24	safe	R/W	0h	
23-16	main	R/W	0h	
15-8	data	R/W	0h	
7-6	RESERVED	R/W	X	
5	ded	R/W	0h	
4	sec	R/W	0h	
3	global_safe_req	R/W	0h	
2	global_main_req	R/W	0h	
1	global_safe	R/W	0h	
0	global_main	R/W	0h	

6.2.7.156 MSS_TPTC_A1_RD_BUS_SAFETY_ERR Register (Offset = 26Ch) [reset = 0h]

MSS_TPTC_A1_RD_BUS_SAFETY_ERR is shown in Figure 6-1071 and described in Table 6-1078.

Return to the Summary Table.

Figure 6-1071. MSS_TPTC_A1_RD_BUS_SAFETY_ERR Register

31	30	29	28	27	26	25	24	23	22	21	20	19	18	17	16
ded								sec							
R-0h								R-0h							

Copyright © 2025 Texas Instruments Incorporated

Figure 6-1071. MSS_TPTC_A1_RD_BUS_SAFETY_ERR Register (continued)

15	14	13	12	11	10	9	8	7	6	5	4	3	2	1	0
comp_check								comp_err							
R-0h								R-0h							

Table 6-1078. MSS_TPTC_A1_RD_BUS_SAFETY_ERR Register Field Descriptions

Bit	Field	Type	Reset	Description
31-24	ded	R	0h	
23-16	sec	R	0h	
15-8	comp_check	R	0h	
7-0	comp_err	R	0h	

6.2.7.157 MSS_TPTC_A1_RD_BUS_SAFETY_ERR_STAT_DATA0 Register (Offset = 270h) [reset = X]

MSS_TPTC_A1_RD_BUS_SAFETY_ERR_STAT_DATA0 is shown in Figure 6-1072 and described in Table 6-1079.

Return to the Summary Table.

Figure 6-1072. MSS_TPTC_A1_RD_BUS_SAFETY_ERR_STAT_DATA0 Register

31	30	29	28	27	26	25	24	23	22	21	20	19	18	17	16	15	14	13	12	11	10	9	8	7	6	5	4	3	2	1	0
RESERVED																d1								d0							
R-X																R-0h								R-0h							

Table 6-1079. MSS_TPTC_A1_RD_BUS_SAFETY_ERR_STAT_DATA0 Register Field Descriptions

Bit	Field	Type	Reset	Description
31-16	RESERVED	R	X	
15-8	d1	R	0h	
7-0	d0	R	0h	

6.2.7.158 MSS_TPTC_A1_RD_BUS_SAFETY_ERR_STAT_CMD Register (Offset = 274h) [reset = 0h]

MSS_TPTC_A1_RD_BUS_SAFETY_ERR_STAT_CMD is shown in Figure 6-1073 and described in Table 6-1080.

Return to the Summary Table.

Figure 6-1073. MSS_TPTC_A1_RD_BUS_SAFETY_ERR_STAT_CMD Register

31	30	29	28	27	26	25	24	23	22	21	20	19	18	17	16	15	14	13	12	11	10	9	8	7	6	5	4	3	2	1	0
stat																															
R-0h																															

Table 6-1080. MSS_TPTC_A1_RD_BUS_SAFETY_ERR_STAT_CMD Register Field Descriptions

Bit	Field	Type	Reset	Description
31-0	stat	R	0h	

6.2.7.159 MSS_TPTC_A1_RD_BUS_SAFETY_ERR_STAT_READ Register (Offset = 278h) [reset = 0h]

MSS_TPTC_A1_RD_BUS_SAFETY_ERR_STAT_READ is shown in Figure 6-1074 and described in Table 6-1081.

Copyright © 2025 Texas Instruments Incorporated

Return to the Summary Table.

Figure 6-1074. MSS_TPTC_A1_RD_BUS_SAFETY_ERR_STAT_READ Register

31	30	29	28	27	26	25	24	23	22	21	20	19	18	17	16	15	14	13	12	11	10	9	8	7	6	5	4	3	2	1	0
stat																															
R-0h																															

Table 6-1081. MSS_TPTC_A1_RD_BUS_SAFETY_ERR_STAT_READ Register Field Descriptions

Bit	Field	Type	Reset	Description
31-0	stat	R	0h	

6.2.7.160 MSS_TPTC_B0_RD_BUS_SAFETY_CTRL Register (Offset = 27Ch) [reset = X]

MSS_TPTC_B0_RD_BUS_SAFETY_CTRL is shown in Figure 6-1075 and described in Table 6-1082.

Return to the Summary Table.

Figure 6-1075. MSS_TPTC_B0_RD_BUS_SAFETY_CTRL Register

31	30	29	28	27	26	25	24
RESERVED							
R/W-X							
23	22	21	20	19	18	17	16
type							
R-0h							
15	14	13	12	11	10	9	8
RESERVED							err_clear
R/W-X							R/W-0h
7	6	5	4	3	2	1	0
RESERVED						enable	
R/W-X						R/W-7h	

Table 6-1082. MSS_TPTC_B0_RD_BUS_SAFETY_CTRL Register Field Descriptions

Bit	Field	Type	Reset	Description
31-24	RESERVED	R/W	X	
23-16	type	R	0h	
15-9	RESERVED	R/W	X	
8	err_clear	R/W	0h	
7-3	RESERVED	R/W	X	
2-0	enable	R/W	7h	

6.2.7.161 MSS_TPTC_B0_RD_BUS_SAFETY_FI Register (Offset = 280h) [reset = X]

MSS_TPTC_B0_RD_BUS_SAFETY_FI is shown in Figure 6-1076 and described in Table 6-1083.

Return to the Summary Table.

Figure 6-1076. MSS_TPTC_B0_RD_BUS_SAFETY_FI Register

31	30	29	28	27	26	25	24
safe							
R/W-0h							

Copyright © 2025 Texas Instruments Incorporated

Figure 6-1076. MSS_TPTC_B0_RD_BUS_SAFETY_FI Register (continued)

23	22	21	20	19	18	17	16
main							
R/W-0h							
15	14	13	12	11	10	9	8
data							
R/W-0h							
7	6	5	4	3	2	1	0
RESERVED		ded	sec	global_safe_req	global_main_req	global_safe	global_main
R/W-X		R/W-0h	R/W-0h	R/W-0h	R/W-0h	R/W-0h	R/W-0h

Table 6-1083. MSS_TPTC_B0_RD_BUS_SAFETY_FI Register Field Descriptions

Bit	Field	Type	Reset	Description
31-24	safe	R/W	0h	
23-16	main	R/W	0h	
15-8	data	R/W	0h	
7-6	RESERVED	R/W	X	
5	ded	R/W	0h	
4	sec	R/W	0h	
3	global_safe_req	R/W	0h	
2	global_main_req	R/W	0h	
1	global_safe	R/W	0h	
0	global_main	R/W	0h	

6.2.7.162 MSS_TPTC_B0_RD_BUS_SAFETY_ERR Register (Offset = 284h) [reset = 0h]

MSS_TPTC_B0_RD_BUS_SAFETY_ERR is shown in Figure 6-1077 and described in Table 6-1084.

Return to the Summary Table.

Figure 6-1077. MSS_TPTC_B0_RD_BUS_SAFETY_ERR Register

31	30	29	28	27	26	25	24	23	22	21	20	19	18	17	16
ded								sec							
R-0h								R-0h							
15	14	13	12	11	10	9	8	7	6	5	4	3	2	1	0
comp_check								comp_err							
R-0h								R-0h							

Table 6-1084. MSS_TPTC_B0_RD_BUS_SAFETY_ERR Register Field Descriptions

Bit	Field	Type	Reset	Description
31-24	ded	R	0h	
23-16	sec	R	0h	
15-8	comp_check	R	0h	
7-0	comp_err	R	0h	

Copyright © 2025 Texas Instruments Incorporated

6.2.7.163 MSS_TPTC_B0_RD_BUS_SAFETY_ERR_STAT_DATA0 Register (Offset = 288h) [reset = X]

MSS_TPTC_B0_RD_BUS_SAFETY_ERR_STAT_DATA0 is shown in Figure 6-1078 and described in Table 6-1085.

Return to the Summary Table.

Figure 6-1078. MSS_TPTC_B0_RD_BUS_SAFETY_ERR_STAT_DATA0 Register

31	30	29	28	27	26	25	24	23	22	21	20	19	18	17	16	15	14	13	12	11	10	9	8	7	6	5	4	3	2	1	0
RESERVED																d1								d0							
R-X																R-0h								R-0h							

Table 6-1085. MSS_TPTC_B0_RD_BUS_SAFETY_ERR_STAT_DATA0 Register Field Descriptions

Bit	Field	Type	Reset	Description
31-16	RESERVED	R	X	
15-8	d1	R	0h	
7-0	d0	R	0h	

6.2.7.164 MSS_TPTC_B0_RD_BUS_SAFETY_ERR_STAT_CMD Register (Offset = 28Ch) [reset = 0h]

MSS_TPTC_B0_RD_BUS_SAFETY_ERR_STAT_CMD is shown in Figure 6-1079 and described in Table 6-1086.

Return to the Summary Table.

Figure 6-1079. MSS_TPTC_B0_RD_BUS_SAFETY_ERR_STAT_CMD Register

31	30	29	28	27	26	25	24	23	22	21	20	19	18	17	16	15	14	13	12	11	10	9	8	7	6	5	4	3	2	1	0
stat																															
R-0h																															

Table 6-1086. MSS_TPTC_B0_RD_BUS_SAFETY_ERR_STAT_CMD Register Field Descriptions

Bit	Field	Type	Reset	Description
31-0	stat	R	0h	

6.2.7.165 MSS_TPTC_B0_RD_BUS_SAFETY_ERR_STAT_READ Register (Offset = 290h) [reset = 0h]

MSS_TPTC_B0_RD_BUS_SAFETY_ERR_STAT_READ is shown in Figure 6-1080 and described in Table 6-1087.

Return to the Summary Table.

Figure 6-1080. MSS_TPTC_B0_RD_BUS_SAFETY_ERR_STAT_READ Register

31	30	29	28	27	26	25	24	23	22	21	20	19	18	17	16	15	14	13	12	11	10	9	8	7	6	5	4	3	2	1	0
stat																															
R-0h																															

Table 6-1087. MSS_TPTC_B0_RD_BUS_SAFETY_ERR_STAT_READ Register Field Descriptions

Bit	Field	Type	Reset	Description
31-0	stat	R	0h	

6.2.7.166 MSS_TPTC_A0_WR_BUS_SAFETY_CTRL Register (Offset = 294h) [reset = X]

MSS_TPTC_A0_WR_BUS_SAFETY_CTRL is shown in Figure 6-1081 and described in Table 6-1088.

Copyright © 2025 Texas Instruments Incorporated

Return to the Summary Table.

Figure 6-1081. MSS_TPTC_A0_WR_BUS_SAFETY_CTRL Register

31	30	29	28	27	26	25	24
RESERVED							
R/W-X							
23	22	21	20	19	18	17	16
type							
R-0h							
15	14	13	12	11	10	9	8
RESERVED							err_clear
R/W-X							R/W-0h
7	6	5	4	3	2	1	0
RESERVED						enable	
R/W-X						R/W-7h	

Table 6-1088. MSS_TPTC_A0_WR_BUS_SAFETY_CTRL Register Field Descriptions

Bit	Field	Type	Reset	Description
31-24	RESERVED	R/W	X	
23-16	type	R	0h	
15-9	RESERVED	R/W	X	
8	err_clear	R/W	0h	
7-3	RESERVED	R/W	X	
2-0	enable	R/W	7h	

6.2.7.167 MSS_TPTC_A0_WR_BUS_SAFETY_FI Register (Offset = 298h) [reset = X]

MSS_TPTC_A0_WR_BUS_SAFETY_FI is shown in Figure 6-1082 and described in Table 6-1089.

Return to the Summary Table.

Figure 6-1082. MSS_TPTC_A0_WR_BUS_SAFETY_FI Register

31	30	29	28	27	26	25	24
safe							
R/W-0h							
23	22	21	20	19	18	17	16
main							
R/W-0h							
15	14	13	12	11	10	9	8
data							
R/W-0h							
7	6	5	4	3	2	1	0
RESERVED		ded	sec	global_safe_req	global_main_req	global_safe	global_main
R/W-X		R/W-0h	R/W-0h	R/W-0h	R/W-0h	R/W-0h	R/W-0h

Copyright © 2025 Texas Instruments Incorporated

Table 6-1089. MSS_TPTC_A0_WR_BUS_SAFETY_FI Register Field Descriptions

Bit	Field	Type	Reset	Description
31-24	safe	R/W	0h	
23-16	main	R/W	0h	
15-8	data	R/W	0h	
7-6	RESERVED	R/W	X	
5	ded	R/W	0h	
4	sec	R/W	0h	
3	global_safe_req	R/W	0h	
2	global_main_req	R/W	0h	
1	global_safe	R/W	0h	
0	global_main	R/W	0h	

6.2.7.168 MSS_TPTC_A0_WR_BUS_SAFETY_ERR Register (Offset = 29Ch) [reset = 0h]

MSS_TPTC_A0_WR_BUS_SAFETY_ERR is shown in Figure 6-1083 and described in Table 6-1090.

Return to the Summary Table.

Figure 6-1083. MSS_TPTC_A0_WR_BUS_SAFETY_ERR Register

31	30	29	28	27	26	25	24	23	22	21	20	19	18	17	16
ded								sec							
R-0h								R-0h							
15	14	13	12	11	10	9	8	7	6	5	4	3	2	1	0
comp_check								comp_err							
R-0h								R-0h							

Table 6-1090. MSS_TPTC_A0_WR_BUS_SAFETY_ERR Register Field Descriptions

Bit	Field	Type	Reset	Description
31-24	ded	R	0h	
23-16	sec	R	0h	
15-8	comp_check	R	0h	
7-0	comp_err	R	0h	

6.2.7.169 MSS_TPTC_A0_WR_BUS_SAFETY_ERR_STAT_DATA0 Register (Offset = 2A0h) [reset = X]

MSS_TPTC_A0_WR_BUS_SAFETY_ERR_STAT_DATA0 is shown in Figure 6-1084 and described in Table 6-1091.

Return to the Summary Table.

Figure 6-1084. MSS_TPTC_A0_WR_BUS_SAFETY_ERR_STAT_DATA0 Register

31	30	29	28	27	26	25	24	23	22	21	20	19	18	17	16	15	14	13	12	11	10	9	8	7	6	5	4	3	2	1	0
RESERVED																d1								d0							
R-X																R-0h								R-0h							

Table 6-1091. MSS_TPTC_A0_WR_BUS_SAFETY_ERR_STAT_DATA0 Register Field Descriptions

Bit	Field	Type	Reset	Description
31-16	RESERVED	R	X	
15-8	d1	R	0h	

Copyright © 2025 Texas Instruments Incorporated

Table 6-1091. MSS_TPTC_A0_WR_BUS_SAFETY_ERR_STAT_DATA0 Register Field Descriptions (continued)

Bit	Field	Type	Reset	Description
7-0	d0	R	0h	

6.2.7.170 MSS_TPTC_A0_WR_BUS_SAFETY_ERR_STAT_CMD Register (Offset = 2A4h) [reset = 0h]

MSS_TPTC_A0_WR_BUS_SAFETY_ERR_STAT_CMD is shown in Figure 6-1085 and described in Table 6-1092.

Return to the Summary Table.

Figure 6-1085. MSS_TPTC_A0_WR_BUS_SAFETY_ERR_STAT_CMD Register

31	30	29	28	27	26	25	24	23	22	21	20	19	18	17	16	15	14	13	12	11	10	9	8	7	6	5	4	3	2	1	0
stat																															
R-0h																															

Table 6-1092. MSS_TPTC_A0_WR_BUS_SAFETY_ERR_STAT_CMD Register Field Descriptions

Bit	Field	Type	Reset	Description
31-0	stat	R	0h	

6.2.7.171 MSS_TPTC_A0_WR_BUS_SAFETY_ERR_STAT_WRITE Register (Offset = 2A8h) [reset = 0h]

MSS_TPTC_A0_WR_BUS_SAFETY_ERR_STAT_WRITE is shown in Figure 6-1086 and described in Table 6-1093.

Return to the Summary Table.

Figure 6-1086. MSS_TPTC_A0_WR_BUS_SAFETY_ERR_STAT_WRITE Register

31	30	29	28	27	26	25	24	23	22	21	20	19	18	17	16	15	14	13	12	11	10	9	8	7	6	5	4	3	2	1	0
stat																															
R-0h																															

Table 6-1093. MSS_TPTC_A0_WR_BUS_SAFETY_ERR_STAT_WRITE Register Field Descriptions

Bit	Field	Type	Reset	Description
31-0	stat	R	0h	

6.2.7.172 MSS_TPTC_A0_WR_BUS_SAFETY_ERR_STAT_WRITERESP Register (Offset = 2ACh) [reset = 0h]

MSS_TPTC_A0_WR_BUS_SAFETY_ERR_STAT_WRITERESP is shown in Figure 6-1087 and described in Table 6-1094.

Return to the Summary Table.

Figure 6-1087. MSS_TPTC_A0_WR_BUS_SAFETY_ERR_STAT_WRITERESP Register

31	30	29	28	27	26	25	24	23	22	21	20	19	18	17	16	15	14	13	12	11	10	9	8	7	6	5	4	3	2	1	0
stat																															
R-0h																															

Copyright © 2025 Texas Instruments Incorporated

Table 6-1094. MSS_TPTC_A0_WR_BUS_SAFETY_ERR_STAT_WRITERESP Register Field Descriptions

Bit	Field	Type	Reset	Description
31-0	stat	R	0h	

6.2.7.173 MSS_TPTC_A1_WR_BUS_SAFETY_CTRL Register (Offset = 2B0h) [reset = X]

MSS_TPTC_A1_WR_BUS_SAFETY_CTRL is shown in Figure 6-1088 and described in Table 6-1095.

Return to the Summary Table.

Figure 6-1088. MSS_TPTC_A1_WR_BUS_SAFETY_CTRL Register

31	30	29	28	27	26	25	24
RESERVED							
R/W-X							
23	22	21	20	19	18	17	16
type							
R-0h							
15	14	13	12	11	10	9	8
RESERVED							err_clear
R/W-X							R/W-0h
7	6	5	4	3	2	1	0
RESERVED						enable	
R/W-X						R/W-7h	

Table 6-1095. MSS_TPTC_A1_WR_BUS_SAFETY_CTRL Register Field Descriptions

Bit	Field	Type	Reset	Description
31-24	RESERVED	R/W	X	
23-16	type	R	0h	
15-9	RESERVED	R/W	X	
8	err_clear	R/W	0h	
7-3	RESERVED	R/W	X	
2-0	enable	R/W	7h	

6.2.7.174 MSS_TPTC_A1_WR_BUS_SAFETY_FI Register (Offset = 2B4h) [reset = X]

MSS_TPTC_A1_WR_BUS_SAFETY_FI is shown in Figure 6-1089 and described in Table 6-1096.

Return to the Summary Table.

Figure 6-1089. MSS_TPTC_A1_WR_BUS_SAFETY_FI Register

31	30	29	28	27	26	25	24
safe							
R/W-0h							
23	22	21	20	19	18	17	16
main							
R/W-0h							
15	14	13	12	11	10	9	8
data							
R/W-0h							

Copyright © 2025 Texas Instruments Incorporated

Figure 6-1089. MSS_TPTC_A1_WR_BUS_SAFETY_FI Register (continued)

7	6	5	4	3	2	1	0
RESERVED		ded	sec	global_safe_req	global_main_req	global_safe	global_main
R/W-X		R/W-0h	R/W-0h	R/W-0h	R/W-0h	R/W-0h	R/W-0h

Table 6-1096. MSS_TPTC_A1_WR_BUS_SAFETY_FI Register Field Descriptions

Bit	Field	Type	Reset	Description
31-24	safe	R/W	0h	
23-16	main	R/W	0h	
15-8	data	R/W	0h	
7-6	RESERVED	R/W	X	
5	ded	R/W	0h	
4	sec	R/W	0h	
3	global_safe_req	R/W	0h	
2	global_main_req	R/W	0h	
1	global_safe	R/W	0h	
0	global_main	R/W	0h	

6.2.7.175 MSS_TPTC_A1_WR_BUS_SAFETY_ERR Register (Offset = 2B8h) [reset = 0h]

MSS_TPTC_A1_WR_BUS_SAFETY_ERR is shown in Figure 6-1090 and described in Table 6-1097.

Return to the Summary Table.

Figure 6-1090. MSS_TPTC_A1_WR_BUS_SAFETY_ERR Register

31	30	29	28	27	26	25	24	23	22	21	20	19	18	17	16
ded								sec							
R-0h								R-0h							
15	14	13	12	11	10	9	8	7	6	5	4	3	2	1	0
comp_check								comp_err							
R-0h								R-0h							

Table 6-1097. MSS_TPTC_A1_WR_BUS_SAFETY_ERR Register Field Descriptions

Bit	Field	Type	Reset	Description
31-24	ded	R	0h	
23-16	sec	R	0h	
15-8	comp_check	R	0h	
7-0	comp_err	R	0h	

6.2.7.176 MSS_TPTC_A1_WR_BUS_SAFETY_ERR_STAT_DATA0 Register (Offset = 2BCh) [reset = X]

MSS_TPTC_A1_WR_BUS_SAFETY_ERR_STAT_DATA0 is shown in Figure 6-1091 and described in Table 6-1098.

Return to the Summary Table.

Figure 6-1091. MSS_TPTC_A1_WR_BUS_SAFETY_ERR_STAT_DATA0 Register

31	30	29	28	27	26	25	24	23	22	21	20	19	18	17	16	15	14	13	12	11	10	9	8	7	6	5	4	3	2	1	0
RESERVED																d1								d0							
R-X																R-0h								R-0h							

Copyright © 2025 Texas Instruments Incorporated

Figure 6-1091. MSS_TPTC_A1_WR_BUS_SAFETY_ERR_STAT_DATA0 Register (continued)

Table 6-1098. MSS_TPTC_A1_WR_BUS_SAFETY_ERR_STAT_DATA0 Register Field Descriptions

Bit	Field	Type	Reset	Description
31-16	RESERVED	R	X	
15-8	d1	R	0h	
7-0	d0	R	0h	

6.2.7.177 MSS_TPTC_A1_WR_BUS_SAFETY_ERR_STAT_CMD Register (Offset = 2C0h) [reset = 0h]

MSS_TPTC_A1_WR_BUS_SAFETY_ERR_STAT_CMD is shown in Figure 6-1092 and described in Table 6-1099.

Return to the Summary Table.

Figure 6-1092. MSS_TPTC_A1_WR_BUS_SAFETY_ERR_STAT_CMD Register

31	30	29	28	27	26	25	24	23	22	21	20	19	18	17	16	15	14	13	12	11	10	9	8	7	6	5	4	3	2	1	0
stat																															
R-0h																															

Table 6-1099. MSS_TPTC_A1_WR_BUS_SAFETY_ERR_STAT_CMD Register Field Descriptions

Bit	Field	Type	Reset	Description
31-0	stat	R	0h	

6.2.7.178 MSS_TPTC_A1_WR_BUS_SAFETY_ERR_STAT_WRITE Register (Offset = 2C4h) [reset = 0h]

MSS_TPTC_A1_WR_BUS_SAFETY_ERR_STAT_WRITE is shown in Figure 6-1093 and described in Table 6-1100.

Return to the Summary Table.

Figure 6-1093. MSS_TPTC_A1_WR_BUS_SAFETY_ERR_STAT_WRITE Register

31	30	29	28	27	26	25	24	23	22	21	20	19	18	17	16	15	14	13	12	11	10	9	8	7	6	5	4	3	2	1	0
stat																															
R-0h																															

Table 6-1100. MSS_TPTC_A1_WR_BUS_SAFETY_ERR_STAT_WRITE Register Field Descriptions

Bit	Field	Type	Reset	Description
31-0	stat	R	0h	

6.2.7.179 MSS_TPTC_A1_WR_BUS_SAFETY_ERR_STAT_WRITERESP Register (Offset = 2C8h) [reset = 0h]

MSS_TPTC_A1_WR_BUS_SAFETY_ERR_STAT_WRITERESP is shown in Figure 6-1094 and described in Table 6-1101.

Return to the Summary Table.

Figure 6-1094. MSS_TPTC_A1_WR_BUS_SAFETY_ERR_STAT_WRITERESP Register

31	30	29	28	27	26	25	24	23	22	21	20	19	18	17	16	15	14	13	12	11	10	9	8	7	6	5	4	3	2	1	0
stat																															
R-0h																															

Copyright © 2025 Texas Instruments Incorporated

Table 6-1101. MSS_TPTC_A1_WR_BUS_SAFETY_ERR_STAT_WRITERESP Register Field Descriptions

Bit	Field	Type	Reset	Description
31-0	stat	R	0h	

6.2.7.180 MSS_TPTC_B0_WR_BUS_SAFETY_CTRL Register (Offset = 2CCh) [reset = X]

MSS_TPTC_B0_WR_BUS_SAFETY_CTRL is shown in Figure 6-1095 and described in Table 6-1102.

Return to the Summary Table.

Figure 6-1095. MSS_TPTC_B0_WR_BUS_SAFETY_CTRL Register

31	30	29	28	27	26	25	24
RESERVED							
R/W-X							
23	22	21	20	19	18	17	16
type							
R-0h							
15	14	13	12	11	10	9	8
RESERVED							err_clear
R/W-X							R/W-0h
7	6	5	4	3	2	1	0
RESERVED						enable	
R/W-X						R/W-7h	

Table 6-1102. MSS_TPTC_B0_WR_BUS_SAFETY_CTRL Register Field Descriptions

Bit	Field	Type	Reset	Description
31-24	RESERVED	R/W	X	
23-16	type	R	0h	
15-9	RESERVED	R/W	X	
8	err_clear	R/W	0h	
7-3	RESERVED	R/W	X	
2-0	enable	R/W	7h	

6.2.7.181 MSS_TPTC_B0_WR_BUS_SAFETY_FI Register (Offset = 2D0h) [reset = X]

MSS_TPTC_B0_WR_BUS_SAFETY_FI is shown in Figure 6-1096 and described in Table 6-1103.

Return to the Summary Table.

Figure 6-1096. MSS_TPTC_B0_WR_BUS_SAFETY_FI Register

31	30	29	28	27	26	25	24
safe							
R/W-0h							
23	22	21	20	19	18	17	16
main							
R/W-0h							
15	14	13	12	11	10	9	8
data							
R/W-0h							

Copyright © 2025 Texas Instruments Incorporated

Figure 6-1096. MSS_TPTC_B0_WR_BUS_SAFETY_FI Register (continued)

7	6	5	4	3	2	1	0
RESERVED		ded	sec	global_safe_req	global_main_req	global_safe	global_main
R/W-X		R/W-0h	R/W-0h	R/W-0h	R/W-0h	R/W-0h	R/W-0h

Table 6-1103. MSS_TPTC_B0_WR_BUS_SAFETY_FI Register Field Descriptions

Bit	Field	Type	Reset	Description
31-24	safe	R/W	0h	
23-16	main	R/W	0h	
15-8	data	R/W	0h	
7-6	RESERVED	R/W	X	
5	ded	R/W	0h	
4	sec	R/W	0h	
3	global_safe_req	R/W	0h	
2	global_main_req	R/W	0h	
1	global_safe	R/W	0h	
0	global_main	R/W	0h	

6.2.7.182 MSS_TPTC_B0_WR_BUS_SAFETY_ERR Register (Offset = 2D4h) [reset = 0h]

MSS_TPTC_B0_WR_BUS_SAFETY_ERR is shown in Figure 6-1097 and described in Table 6-1104.

Return to the Summary Table.

Figure 6-1097. MSS_TPTC_B0_WR_BUS_SAFETY_ERR Register

31	30	29	28	27	26	25	24	23	22	21	20	19	18	17	16
ded								sec							
R-0h								R-0h							
15	14	13	12	11	10	9	8	7	6	5	4	3	2	1	0
comp_check								comp_err							
R-0h								R-0h							

Table 6-1104. MSS_TPTC_B0_WR_BUS_SAFETY_ERR Register Field Descriptions

Bit	Field	Type	Reset	Description
31-24	ded	R	0h	
23-16	sec	R	0h	
15-8	comp_check	R	0h	
7-0	comp_err	R	0h	

6.2.7.183 MSS_TPTC_B0_WR_BUS_SAFETY_ERR_STAT_DATA0 Register (Offset = 2D8h) [reset = X]

MSS_TPTC_B0_WR_BUS_SAFETY_ERR_STAT_DATA0 is shown in Figure 6-1098 and described in Table 6-1105.

Return to the Summary Table.

Figure 6-1098. MSS_TPTC_B0_WR_BUS_SAFETY_ERR_STAT_DATA0 Register

31	30	29	28	27	26	25	24	23	22	21	20	19	18	17	16	15	14	13	12	11	10	9	8	7	6	5	4	3	2	1	0
RESERVED																d1								d0							
R-X																R-0h								R-0h							

Copyright © 2025 Texas Instruments Incorporated

Figure 6-1098. MSS_TPTC_B0_WR_BUS_SAFETY_ERR_STAT_DATA0 Register (continued)

Table 6-1105. MSS_TPTC_B0_WR_BUS_SAFETY_ERR_STAT_DATA0 Register Field Descriptions

Bit	Field	Type	Reset	Description
31-16	RESERVED	R	X	
15-8	d1	R	0h	
7-0	d0	R	0h	

6.2.7.184 MSS_TPTC_B0_WR_BUS_SAFETY_ERR_STAT_CMD Register (Offset = 2DCh) [reset = 0h]

MSS_TPTC_B0_WR_BUS_SAFETY_ERR_STAT_CMD is shown in Figure 6-1099 and described in Table 6-1106.

Return to the Summary Table.

Figure 6-1099. MSS_TPTC_B0_WR_BUS_SAFETY_ERR_STAT_CMD Register

31	30	29	28	27	26	25	24	23	22	21	20	19	18	17	16	15	14	13	12	11	10	9	8	7	6	5	4	3	2	1	0
stat																															
R-0h																															

Table 6-1106. MSS_TPTC_B0_WR_BUS_SAFETY_ERR_STAT_CMD Register Field Descriptions

Bit	Field	Type	Reset	Description
31-0	stat	R	0h	

6.2.7.185 MSS_TPTC_B0_WR_BUS_SAFETY_ERR_STAT_WRITE Register (Offset = 2E0h) [reset = 0h]

MSS_TPTC_B0_WR_BUS_SAFETY_ERR_STAT_WRITE is shown in Figure 6-1100 and described in Table 6-1107.

Return to the Summary Table.

Figure 6-1100. MSS_TPTC_B0_WR_BUS_SAFETY_ERR_STAT_WRITE Register

31	30	29	28	27	26	25	24	23	22	21	20	19	18	17	16	15	14	13	12	11	10	9	8	7	6	5	4	3	2	1	0
stat																															
R-0h																															

Table 6-1107. MSS_TPTC_B0_WR_BUS_SAFETY_ERR_STAT_WRITE Register Field Descriptions

Bit	Field	Type	Reset	Description
31-0	stat	R	0h	

6.2.7.186 MSS_TPTC_B0_WR_BUS_SAFETY_ERR_STAT_WRITERESP Register (Offset = 2E4h) [reset = 0h]

MSS_TPTC_B0_WR_BUS_SAFETY_ERR_STAT_WRITERESP is shown in Figure 6-1101 and described in Table 6-1108.

Return to the Summary Table.

Figure 6-1101. MSS_TPTC_B0_WR_BUS_SAFETY_ERR_STAT_WRITERESP Register

31	30	29	28	27	26	25	24	23	22	21	20	19	18	17	16	15	14	13	12	11	10	9	8	7	6	5	4	3	2	1	0
stat																															
R-0h																															

Copyright © 2025 Texas Instruments Incorporated

Table 6-1108. MSS_TPTC_B0_WR_BUS_SAFETY_ERR_STAT_WRITERESP Register Field Descriptions

Bit	Field	Type	Reset	Description
31-0	stat	R	0h	

6.2.7.187 HSM_TPTC_A0_RD_BUS_SAFETY_CTRL Register (Offset = 2E8h) [reset = X]

HSM_TPTC_A0_RD_BUS_SAFETY_CTRL is shown in Figure 6-1102 and described in Table 6-1109.

Return to the Summary Table.

Figure 6-1102. HSM_TPTC_A0_RD_BUS_SAFETY_CTRL Register

31	30	29	28	27	26	25	24
RESERVED							
R/W-X							
23	22	21	20	19	18	17	16
type							
R-0h							
15	14	13	12	11	10	9	8
RESERVED							err_clear
R/W-X							R/W-0h
7	6	5	4	3	2	1	0
RESERVED						enable	
R/W-X						R/W-7h	

Table 6-1109. HSM_TPTC_A0_RD_BUS_SAFETY_CTRL Register Field Descriptions

Bit	Field	Type	Reset	Description
31-24	RESERVED	R/W	X	
23-16	type	R	0h	
15-9	RESERVED	R/W	X	
8	err_clear	R/W	0h	
7-3	RESERVED	R/W	X	
2-0	enable	R/W	7h	

6.2.7.188 HSM_TPTC_A0_RD_BUS_SAFETY_FI Register (Offset = 2ECh) [reset = X]

HSM_TPTC_A0_RD_BUS_SAFETY_FI is shown in Figure 6-1103 and described in Table 6-1110.

Return to the Summary Table.

Figure 6-1103. HSM_TPTC_A0_RD_BUS_SAFETY_FI Register

31	30	29	28	27	26	25	24
safe							
R/W-0h							
23	22	21	20	19	18	17	16
main							
R/W-0h							
15	14	13	12	11	10	9	8
data							
R/W-0h							

Copyright © 2025 Texas Instruments Incorporated

Figure 6-1103. HSM_TPTC_A0_RD_BUS_SAFETY_FI Register (continued)

7	6	5	4	3	2	1	0
RESERVED		ded	sec	global_safe_req	global_main_req	global_safe	global_main
R/W-X		R/W-0h	R/W-0h	R/W-0h	R/W-0h	R/W-0h	R/W-0h

Table 6-1110. HSM_TPTC_A0_RD_BUS_SAFETY_FI Register Field Descriptions

Bit	Field	Type	Reset	Description
31-24	safe	R/W	0h	
23-16	main	R/W	0h	
15-8	data	R/W	0h	
7-6	RESERVED	R/W	X	
5	ded	R/W	0h	
4	sec	R/W	0h	
3	global_safe_req	R/W	0h	
2	global_main_req	R/W	0h	
1	global_safe	R/W	0h	
0	global_main	R/W	0h	

6.2.7.189 HSM_TPTC_A0_RD_BUS_SAFETY_ERR Register (Offset = 2F0h) [reset = 0h]

HSM_TPTC_A0_RD_BUS_SAFETY_ERR is shown in Figure 6-1104 and described in Table 6-1111.

Return to the Summary Table.

Figure 6-1104. HSM_TPTC_A0_RD_BUS_SAFETY_ERR Register

31	30	29	28	27	26	25	24	23	22	21	20	19	18	17	16
ded								sec							
R-0h								R-0h							
15	14	13	12	11	10	9	8	7	6	5	4	3	2	1	0
comp_check								comp_err							
R-0h								R-0h							

Table 6-1111. HSM_TPTC_A0_RD_BUS_SAFETY_ERR Register Field Descriptions

Bit	Field	Type	Reset	Description
31-24	ded	R	0h	
23-16	sec	R	0h	
15-8	comp_check	R	0h	
7-0	comp_err	R	0h	

6.2.7.190 HSM_TPTC_A0_RD_BUS_SAFETY_ERR_STAT_DATA0 Register (Offset = 2F4h) [reset = X]

HSM_TPTC_A0_RD_BUS_SAFETY_ERR_STAT_DATA0 is shown in Figure 6-1105 and described in Table 6-1112.

Return to the Summary Table.

Figure 6-1105. HSM_TPTC_A0_RD_BUS_SAFETY_ERR_STAT_DATA0 Register

31	30	29	28	27	26	25	24	23	22	21	20	19	18	17	16	15	14	13	12	11	10	9	8	7	6	5	4	3	2	1	0
RESERVED																d1								d0							
R-X																R-0h								R-0h							

Copyright © 2025 Texas Instruments Incorporated

Figure 6-1105. HSM_TPTC_A0_RD_BUS_SAFETY_ERR_STAT_DATA0 Register (continued)

Table 6-1112. HSM_TPTC_A0_RD_BUS_SAFETY_ERR_STAT_DATA0 Register Field Descriptions

Bit	Field	Type	Reset	Description
31-16	RESERVED	R	X	
15-8	d1	R	0h	
7-0	d0	R	0h	

6.2.7.191 HSM_TPTC_A0_RD_BUS_SAFETY_ERR_STAT_CMD Register (Offset = 2F8h) [reset = 0h]

HSM_TPTC_A0_RD_BUS_SAFETY_ERR_STAT_CMD is shown in Figure 6-1106 and described in Table 6-1113.

Return to the Summary Table.

Figure 6-1106. HSM_TPTC_A0_RD_BUS_SAFETY_ERR_STAT_CMD Register

31	30	29	28	27	26	25	24	23	22	21	20	19	18	17	16	15	14	13	12	11	10	9	8	7	6	5	4	3	2	1	0
stat																															
R-0h																															

Table 6-1113. HSM_TPTC_A0_RD_BUS_SAFETY_ERR_STAT_CMD Register Field Descriptions

Bit	Field	Type	Reset	Description
31-0	stat	R	0h	

6.2.7.192 HSM_TPTC_A0_RD_BUS_SAFETY_ERR_STAT_READ Register (Offset = 2FCh) [reset = 0h]

HSM_TPTC_A0_RD_BUS_SAFETY_ERR_STAT_READ is shown in Figure 6-1107 and described in Table 6-1114.

Return to the Summary Table.

Figure 6-1107. HSM_TPTC_A0_RD_BUS_SAFETY_ERR_STAT_READ Register

31	30	29	28	27	26	25	24	23	22	21	20	19	18	17	16	15	14	13	12	11	10	9	8	7	6	5	4	3	2	1	0
stat																															
R-0h																															

Table 6-1114. HSM_TPTC_A0_RD_BUS_SAFETY_ERR_STAT_READ Register Field Descriptions

Bit	Field	Type	Reset	Description
31-0	stat	R	0h	

6.2.7.193 HSM_TPTC_A1_RD_BUS_SAFETY_CTRL Register (Offset = 300h) [reset = X]

HSM_TPTC_A1_RD_BUS_SAFETY_CTRL is shown in Figure 6-1108 and described in Table 6-1115.

Return to the Summary Table.

Figure 6-1108. HSM_TPTC_A1_RD_BUS_SAFETY_CTRL Register

31	30	29	28	27	26	25	24
RESERVED							
R/W-X							
23	22	21	20	19	18	17	16
type							

Copyright © 2025 Texas Instruments Incorporated

Figure 6-1108. HSM_TPTC_A1_RD_BUS_SAFETY_CTRL Register (continued)

R-0h							
15	14	13	12	11	10	9	8
RESERVED							err_clear
R/W-X							R/W-0h
7	6	5	4	3	2	1	0
RESERVED						enable	
R/W-X						R/W-7h	

Table 6-1115. HSM_TPTC_A1_RD_BUS_SAFETY_CTRL Register Field Descriptions

Bit	Field	Type	Reset	Description
31-24	RESERVED	R/W	X	
23-16	type	R	0h	
15-9	RESERVED	R/W	X	
8	err_clear	R/W	0h	
7-3	RESERVED	R/W	X	
2-0	enable	R/W	7h	

6.2.7.194 HSM_TPTC_A1_RD_BUS_SAFETY_FI Register (Offset = 304h) [reset = X]

HSM_TPTC_A1_RD_BUS_SAFETY_FI is shown in Figure 6-1109 and described in Table 6-1116.

Return to the Summary Table.

Figure 6-1109. HSM_TPTC_A1_RD_BUS_SAFETY_FI Register

31	30	29	28	27	26	25	24
safe							
R/W-0h							
23	22	21	20	19	18	17	16
main							
R/W-0h							
15	14	13	12	11	10	9	8
data							
R/W-0h							
7	6	5	4	3	2	1	0
RESERVED		ded	sec	global_safe_req	global_main_req	global_safe	global_main
R/W-X		R/W-0h	R/W-0h	R/W-0h	R/W-0h	R/W-0h	R/W-0h

Table 6-1116. HSM_TPTC_A1_RD_BUS_SAFETY_FI Register Field Descriptions

Bit	Field	Type	Reset	Description
31-24	safe	R/W	0h	
23-16	main	R/W	0h	
15-8	data	R/W	0h	
7-6	RESERVED	R/W	X	
5	ded	R/W	0h	
4	sec	R/W	0h	
3	global_safe_req	R/W	0h	

Copyright © 2025 Texas Instruments Incorporated

Table 6-1116. HSM_TPTC_A1_RD_BUS_SAFETY_FI Register Field Descriptions (continued)

Bit	Field	Type	Reset	Description
2	global_main_req	R/W	0h	
1	global_safe	R/W	0h	
0	global_main	R/W	0h	

6.2.7.195 HSM_TPTC_A1_RD_BUS_SAFETY_ERR Register (Offset = 308h) [reset = 0h]

HSM_TPTC_A1_RD_BUS_SAFETY_ERR is shown in Figure 6-1110 and described in Table 6-1117.

Return to the Summary Table.

Figure 6-1110. HSM_TPTC_A1_RD_BUS_SAFETY_ERR Register

31	30	29	28	27	26	25	24	23	22	21	20	19	18	17	16
ded								sec							
R-0h								R-0h							
15	14	13	12	11	10	9	8	7	6	5	4	3	2	1	0
comp_check								comp_err							
R-0h								R-0h							

Table 6-1117. HSM_TPTC_A1_RD_BUS_SAFETY_ERR Register Field Descriptions

Bit	Field	Type	Reset	Description
31-24	ded	R	0h	
23-16	sec	R	0h	
15-8	comp_check	R	0h	
7-0	comp_err	R	0h	

6.2.7.196 HSM_TPTC_A1_RD_BUS_SAFETY_ERR_STAT_DATA0 Register (Offset = 30Ch) [reset = X]

HSM_TPTC_A1_RD_BUS_SAFETY_ERR_STAT_DATA0 is shown in Figure 6-1111 and described in Table 6-1118.

Return to the Summary Table.

Figure 6-1111. HSM_TPTC_A1_RD_BUS_SAFETY_ERR_STAT_DATA0 Register

31	30	29	28	27	26	25	24	23	22	21	20	19	18	17	16	15	14	13	12	11	10	9	8	7	6	5	4	3	2	1	0
RESERVED																d1								d0							
R-X																R-0h								R-0h							

Table 6-1118. HSM_TPTC_A1_RD_BUS_SAFETY_ERR_STAT_DATA0 Register Field Descriptions

Bit	Field	Type	Reset	Description
31-16	RESERVED	R	X	
15-8	d1	R	0h	
7-0	d0	R	0h	

6.2.7.197 HSM_TPTC_A1_RD_BUS_SAFETY_ERR_STAT_CMD Register (Offset = 310h) [reset = 0h]

HSM_TPTC_A1_RD_BUS_SAFETY_ERR_STAT_CMD is shown in Figure 6-1112 and described in Table 6-1119.

Return to the Summary Table.

Copyright © 2025 Texas Instruments Incorporated

Figure 6-1112. HSM_TPTC_A1_RD_BUS_SAFETY_ERR_STAT_CMD Register

31	30	29	28	27	26	25	24	23	22	21	20	19	18	17	16	15	14	13	12	11	10	9	8	7	6	5	4	3	2	1	0
stat																															
R-0h																															

Table 6-1119. HSM_TPTC_A1_RD_BUS_SAFETY_ERR_STAT_CMD Register Field Descriptions

Bit	Field	Type	Reset	Description
31-0	stat	R	0h	

6.2.7.198 HSM_TPTC_A1_RD_BUS_SAFETY_ERR_STAT_READ Register (Offset = 314h) [reset = 0h]

HSM_TPTC_A1_RD_BUS_SAFETY_ERR_STAT_READ is shown in Figure 6-1113 and described in Table 6-1120.

Return to the Summary Table.

Figure 6-1113. HSM_TPTC_A1_RD_BUS_SAFETY_ERR_STAT_READ Register

31	30	29	28	27	26	25	24	23	22	21	20	19	18	17	16	15	14	13	12	11	10	9	8	7	6	5	4	3	2	1	0
stat																															
R-0h																															

Table 6-1120. HSM_TPTC_A1_RD_BUS_SAFETY_ERR_STAT_READ Register Field Descriptions

Bit	Field	Type	Reset	Description
31-0	stat	R	0h	

6.2.7.199 HSM_TPTC_A0_WR_BUS_SAFETY_CTRL Register (Offset = 318h) [reset = X]

HSM_TPTC_A0_WR_BUS_SAFETY_CTRL is shown in Figure 6-1114 and described in Table 6-1121.

Return to the Summary Table.

Figure 6-1114. HSM_TPTC_A0_WR_BUS_SAFETY_CTRL Register

31	30	29	28	27	26	25	24
RESERVED							
R/W-X							
23	22	21	20	19	18	17	16
type							
R-0h							
15	14	13	12	11	10	9	8
RESERVED							err_clear
R/W-X							R/W-0h
7	6	5	4	3	2	1	0
RESERVED						enable	
R/W-X						R/W-7h	

Table 6-1121. HSM_TPTC_A0_WR_BUS_SAFETY_CTRL Register Field Descriptions

Bit	Field	Type	Reset	Description
31-24	RESERVED	R/W	X	
23-16	type	R	0h	
15-9	RESERVED	R/W	X	

Copyright © 2025 Texas Instruments Incorporated

Table 6-1121. HSM_TPTC_A0_WR_BUS_SAFETY_CTRL Register Field Descriptions (continued)

Bit	Field	Type	Reset	Description
8	err_clear	R/W	0h	
7-3	RESERVED	R/W	X	
2-0	enable	R/W	7h	

6.2.7.200 HSM_TPTC_A0_WR_BUS_SAFETY_FI Register (Offset = 31Ch) [reset = X]

HSM_TPTC_A0_WR_BUS_SAFETY_FI is shown in Figure 6-1115 and described in Table 6-1122.

Return to the Summary Table.

Figure 6-1115. HSM_TPTC_A0_WR_BUS_SAFETY_FI Register

31	30	29	28	27	26	25	24
safe							
R/W-0h							
23	22	21	20	19	18	17	16
main							
R/W-0h							
15	14	13	12	11	10	9	8
data							
R/W-0h							
7	6	5	4	3	2	1	0
RESERVED		ded	sec	global_safe_req	global_main_req	global_safe	global_main
R/W-X		R/W-0h	R/W-0h	R/W-0h	R/W-0h	R/W-0h	R/W-0h

Table 6-1122. HSM_TPTC_A0_WR_BUS_SAFETY_FI Register Field Descriptions

Bit	Field	Type	Reset	Description
31-24	safe	R/W	0h	
23-16	main	R/W	0h	
15-8	data	R/W	0h	
7-6	RESERVED	R/W	X	
5	ded	R/W	0h	
4	sec	R/W	0h	
3	global_safe_req	R/W	0h	
2	global_main_req	R/W	0h	
1	global_safe	R/W	0h	
0	global_main	R/W	0h	

6.2.7.201 HSM_TPTC_A0_WR_BUS_SAFETY_ERR Register (Offset = 320h) [reset = 0h]

HSM_TPTC_A0_WR_BUS_SAFETY_ERR is shown in Figure 6-1116 and described in Table 6-1123.

Return to the Summary Table.

Figure 6-1116. HSM_TPTC_A0_WR_BUS_SAFETY_ERR Register

31	30	29	28	27	26	25	24	23	22	21	20	19	18	17	16
ded								sec							
R-0h								R-0h							

Copyright © 2025 Texas Instruments Incorporated

Figure 6-1116. HSM_TPTC_A0_WR_BUS_SAFETY_ERR Register (continued)

15	14	13	12	11	10	9	8	7	6	5	4	3	2	1	0
comp_check								comp_err							
R-0h								R-0h							

Table 6-1123. HSM_TPTC_A0_WR_BUS_SAFETY_ERR Register Field Descriptions

Bit	Field	Type	Reset	Description
31-24	ded	R	0h	
23-16	sec	R	0h	
15-8	comp_check	R	0h	
7-0	comp_err	R	0h	

6.2.7.202 HSM_TPTC_A0_WR_BUS_SAFETY_ERR_STAT_DATA0 Register (Offset = 324h) [reset = X]

HSM_TPTC_A0_WR_BUS_SAFETY_ERR_STAT_DATA0 is shown in Figure 6-1117 and described in Table 6-1124.

Return to the Summary Table.

Figure 6-1117. HSM_TPTC_A0_WR_BUS_SAFETY_ERR_STAT_DATA0 Register

31	30	29	28	27	26	25	24	23	22	21	20	19	18	17	16	15	14	13	12	11	10	9	8	7	6	5	4	3	2	1	0
RESERVED																d1								d0							
R-X																R-0h								R-0h							

Table 6-1124. HSM_TPTC_A0_WR_BUS_SAFETY_ERR_STAT_DATA0 Register Field Descriptions

Bit	Field	Type	Reset	Description
31-16	RESERVED	R	X	
15-8	d1	R	0h	
7-0	d0	R	0h	

6.2.7.203 HSM_TPTC_A0_WR_BUS_SAFETY_ERR_STAT_CMD Register (Offset = 328h) [reset = 0h]

HSM_TPTC_A0_WR_BUS_SAFETY_ERR_STAT_CMD is shown in Figure 6-1118 and described in Table 6-1125.

Return to the Summary Table.

Figure 6-1118. HSM_TPTC_A0_WR_BUS_SAFETY_ERR_STAT_CMD Register

31	30	29	28	27	26	25	24	23	22	21	20	19	18	17	16	15	14	13	12	11	10	9	8	7	6	5	4	3	2	1	0
stat																															
R-0h																															

Table 6-1125. HSM_TPTC_A0_WR_BUS_SAFETY_ERR_STAT_CMD Register Field Descriptions

Bit	Field	Type	Reset	Description
31-0	stat	R	0h	

6.2.7.204 HSM_TPTC_A0_WR_BUS_SAFETY_ERR_STAT_WRITE Register (Offset = 32Ch) [reset = 0h]

HSM_TPTC_A0_WR_BUS_SAFETY_ERR_STAT_WRITE is shown in Figure 6-1119 and described in Table 6-1126.

Copyright © 2025 Texas Instruments Incorporated

Return to the Summary Table.

Figure 6-1119. HSM_TPTC_A0_WR_BUS_SAFETY_ERR_STAT_WRITE Register

31	30	29	28	27	26	25	24	23	22	21	20	19	18	17	16	15	14	13	12	11	10	9	8	7	6	5	4	3	2	1	0
stat																															
R-0h																															

Table 6-1126. HSM_TPTC_A0_WR_BUS_SAFETY_ERR_STAT_WRITE Register Field Descriptions

Bit	Field	Type	Reset	Description
31-0	stat	R	0h	

6.2.7.205 HSM_TPTC_A0_WR_BUS_SAFETY_ERR_STAT_WRITERESP Register (Offset = 330h) [reset = 0h]

HSM_TPTC_A0_WR_BUS_SAFETY_ERR_STAT_WRITERESP is shown in Figure 6-1120 and described in Table 6-1127.

Return to the Summary Table.

Figure 6-1120. HSM_TPTC_A0_WR_BUS_SAFETY_ERR_STAT_WRITERESP Register

31	30	29	28	27	26	25	24	23	22	21	20	19	18	17	16	15	14	13	12	11	10	9	8	7	6	5	4	3	2	1	0
stat																															
R-0h																															

Table 6-1127. HSM_TPTC_A0_WR_BUS_SAFETY_ERR_STAT_WRITERESP Register Field Descriptions

Bit	Field	Type	Reset	Description
31-0	stat	R	0h	

6.2.7.206 HSM_TPTC_A1_WR_BUS_SAFETY_CTRL Register (Offset = 334h) [reset = X]

HSM_TPTC_A1_WR_BUS_SAFETY_CTRL is shown in Figure 6-1121 and described in Table 6-1128.

Return to the Summary Table.

Figure 6-1121. HSM_TPTC_A1_WR_BUS_SAFETY_CTRL Register

31	30	29	28	27	26	25	24
RESERVED							
R/W-X							
23	22	21	20	19	18	17	16
type							
R-0h							
15	14	13	12	11	10	9	8
RESERVED							err_clear
R/W-X							R/W-0h
7	6	5	4	3	2	1	0
RESERVED						enable	
R/W-X						R/W-7h	

Copyright © 2025 Texas Instruments Incorporated

Table 6-1128. HSM_TPTC_A1_WR_BUS_SAFETY_CTRL Register Field Descriptions

Bit	Field	Type	Reset	Description
31-24	RESERVED	R/W	X	
23-16	type	R	0h	
15-9	RESERVED	R/W	X	
8	err_clear	R/W	0h	
7-3	RESERVED	R/W	X	
2-0	enable	R/W	7h	

6.2.7.207 HSM_TPTC_A1_WR_BUS_SAFETY_FI Register (Offset = 338h) [reset = X]

HSM_TPTC_A1_WR_BUS_SAFETY_FI is shown in Figure 6-1122 and described in Table 6-1129.

Return to the Summary Table.

Figure 6-1122. HSM_TPTC_A1_WR_BUS_SAFETY_FI Register

31	30	29	28	27	26	25	24
safe							
R/W-0h							
23	22	21	20	19	18	17	16
main							
R/W-0h							
15	14	13	12	11	10	9	8
data							
R/W-0h							
7	6	5	4	3	2	1	0
RESERVED		ded	sec	global_safe_req	global_main_req	global_safe	global_main
R/W-X		R/W-0h	R/W-0h	R/W-0h	R/W-0h	R/W-0h	R/W-0h

Table 6-1129. HSM_TPTC_A1_WR_BUS_SAFETY_FI Register Field Descriptions

Bit	Field	Type	Reset	Description
31-24	safe	R/W	0h	
23-16	main	R/W	0h	
15-8	data	R/W	0h	
7-6	RESERVED	R/W	X	
5	ded	R/W	0h	
4	sec	R/W	0h	
3	global_safe_req	R/W	0h	
2	global_main_req	R/W	0h	
1	global_safe	R/W	0h	
0	global_main	R/W	0h	

6.2.7.208 HSM_TPTC_A1_WR_BUS_SAFETY_ERR Register (Offset = 33Ch) [reset = 0h]

HSM_TPTC_A1_WR_BUS_SAFETY_ERR is shown in Figure 6-1123 and described in Table 6-1130.

Return to the Summary Table.

Copyright © 2025 Texas Instruments Incorporated

Figure 6-1123. HSM_TPTC_A1_WR_BUS_SAFETY_ERR Register

31	30	29	28	27	26	25	24	23	22	21	20	19	18	17	16
ded								sec							
R-0h								R-0h							
15	14	13	12	11	10	9	8	7	6	5	4	3	2	1	0
comp_check								comp_err							
R-0h								R-0h							

Table 6-1130. HSM_TPTC_A1_WR_BUS_SAFETY_ERR Register Field Descriptions

Bit	Field	Type	Reset	Description
31-24	ded	R	0h	
23-16	sec	R	0h	
15-8	comp_check	R	0h	
7-0	comp_err	R	0h	

6.2.7.209 HSM_TPTC_A1_WR_BUS_SAFETY_ERR_STAT_DATA0 Register (Offset = 340h) [reset = X]

HSM_TPTC_A1_WR_BUS_SAFETY_ERR_STAT_DATA0 is shown in Figure 6-1124 and described in Table 6-1131.

Return to the Summary Table.

Figure 6-1124. HSM_TPTC_A1_WR_BUS_SAFETY_ERR_STAT_DATA0 Register

31	30	29	28	27	26	25	24	23	22	21	20	19	18	17	16	15	14	13	12	11	10	9	8	7	6	5	4	3	2	1	0
RESERVED																d1								d0							
R-X																R-0h								R-0h							

Table 6-1131. HSM_TPTC_A1_WR_BUS_SAFETY_ERR_STAT_DATA0 Register Field Descriptions

Bit	Field	Type	Reset	Description
31-16	RESERVED	R	X	
15-8	d1	R	0h	
7-0	d0	R	0h	

6.2.7.210 HSM_TPTC_A1_WR_BUS_SAFETY_ERR_STAT_CMD Register (Offset = 344h) [reset = 0h]

HSM_TPTC_A1_WR_BUS_SAFETY_ERR_STAT_CMD is shown in Figure 6-1125 and described in Table 6-1132.

Return to the Summary Table.

Figure 6-1125. HSM_TPTC_A1_WR_BUS_SAFETY_ERR_STAT_CMD Register

31	30	29	28	27	26	25	24	23	22	21	20	19	18	17	16	15	14	13	12	11	10	9	8	7	6	5	4	3	2	1	0
stat																															
R-0h																															

Table 6-1132. HSM_TPTC_A1_WR_BUS_SAFETY_ERR_STAT_CMD Register Field Descriptions

Bit	Field	Type	Reset	Description
31-0	stat	R	0h	

Copyright © 2025 Texas Instruments Incorporated

6.2.7.211 HSM_TPTC_A1_WR_BUS_SAFETY_ERR_STAT_WRITE Register (Offset = 348h) [reset = 0h]

HSM_TPTC_A1_WR_BUS_SAFETY_ERR_STAT_WRITE is shown in Figure 6-1126 and described in Table 6-1133.

Return to the Summary Table.

Figure 6-1126. HSM_TPTC_A1_WR_BUS_SAFETY_ERR_STAT_WRITE Register

31	30	29	28	27	26	25	24	23	22	21	20	19	18	17	16	15	14	13	12	11	10	9	8	7	6	5	4	3	2	1	0
stat																															
R-0h																															

Table 6-1133. HSM_TPTC_A1_WR_BUS_SAFETY_ERR_STAT_WRITE Register Field Descriptions

Bit	Field	Type	Reset	Description
31-0	stat	R	0h	

6.2.7.212 HSM_TPTC_A1_WR_BUS_SAFETY_ERR_STAT_WRITERESP Register (Offset = 34Ch) [reset = 0h]

HSM_TPTC_A1_WR_BUS_SAFETY_ERR_STAT_WRITERESP is shown in Figure 6-1127 and described in Table 6-1134.

Return to the Summary Table.

Figure 6-1127. HSM_TPTC_A1_WR_BUS_SAFETY_ERR_STAT_WRITERESP Register

31	30	29	28	27	26	25	24	23	22	21	20	19	18	17	16	15	14	13	12	11	10	9	8	7	6	5	4	3	2	1	0
stat																															
R-0h																															

Table 6-1134. HSM_TPTC_A1_WR_BUS_SAFETY_ERR_STAT_WRITERESP Register Field Descriptions

Bit	Field	Type	Reset	Description
31-0	stat	R	0h	

6.2.7.213 MSS_QSPI_BUS_SAFETY_CTRL Register (Offset = 350h) [reset = X]

MSS_QSPI_BUS_SAFETY_CTRL is shown in Figure 6-1128 and described in Table 6-1135.

Return to the Summary Table.

Figure 6-1128. MSS_QSPI_BUS_SAFETY_CTRL Register

31	30	29	28	27	26	25	24
RESERVED							
R/W-X							
23	22	21	20	19	18	17	16
type							
R-0h							
15	14	13	12	11	10	9	8
RESERVED							err_clear
R/W-X							R/W-0h
7	6	5	4	3	2	1	0
RESERVED						enable	
R/W-X						R/W-7h	

Copyright © 2025 Texas Instruments Incorporated

Figure 6-1128. MSS_QSPI_BUS_SAFETY_CTRL Register (continued)

Table 6-1135. MSS_QSPI_BUS_SAFETY_CTRL Register Field Descriptions

Bit	Field	Type	Reset	Description
31-24	RESERVED	R/W	X	
23-16	type	R	0h	
15-9	RESERVED	R/W	X	
8	err_clear	R/W	0h	
7-3	RESERVED	R/W	X	
2-0	enable	R/W	7h	

6.2.7.214 MSS_QSPI_BUS_SAFETY_FI Register (Offset = 354h) [reset = X]

MSS_QSPI_BUS_SAFETY_FI is shown in Figure 6-1129 and described in Table 6-1136.

Return to the Summary Table.

Figure 6-1129. MSS_QSPI_BUS_SAFETY_FI Register

31	30	29	28	27	26	25	24
safe							
R/W-0h							
23	22	21	20	19	18	17	16
main							
R/W-0h							
15	14	13	12	11	10	9	8
data							
R/W-0h							
7	6	5	4	3	2	1	0
RESERVED		ded	sec	global_safe_req	global_main_req	global_safe	global_main
R/W-X		R/W-0h	R/W-0h	R/W-0h	R/W-0h	R/W-0h	R/W-0h

Table 6-1136. MSS_QSPI_BUS_SAFETY_FI Register Field Descriptions

Bit	Field	Type	Reset	Description
31-24	safe	R/W	0h	
23-16	main	R/W	0h	
15-8	data	R/W	0h	
7-6	RESERVED	R/W	X	
5	ded	R/W	0h	
4	sec	R/W	0h	
3	global_safe_req	R/W	0h	
2	global_main_req	R/W	0h	
1	global_safe	R/W	0h	
0	global_main	R/W	0h	

6.2.7.215 MSS_QSPI_BUS_SAFETY_ERR Register (Offset = 358h) [reset = 0h]

MSS_QSPI_BUS_SAFETY_ERR is shown in Figure 6-1130 and described in Table 6-1137.

Copyright © 2025 Texas Instruments Incorporated

Return to the Summary Table.

Figure 6-1130. MSS_QSPI_BUS_SAFETY_ERR Register

31	30	29	28	27	26	25	24	23	22	21	20	19	18	17	16
ded								sec							
R-0h								R-0h							
15	14	13	12	11	10	9	8	7	6	5	4	3	2	1	0
comp_check								comp_err							
R-0h								R-0h							

Table 6-1137. MSS_QSPI_BUS_SAFETY_ERR Register Field Descriptions

Bit	Field	Type	Reset	Description
31-24	ded	R	0h	
23-16	sec	R	0h	
15-8	comp_check	R	0h	
7-0	comp_err	R	0h	

6.2.7.216 MSS_QSPI_BUS_SAFETY_ERR_STAT_DATA0 Register (Offset = 35Ch) [reset = X]

MSS_QSPI_BUS_SAFETY_ERR_STAT_DATA0 is shown in Figure 6-1131 and described in Table 6-1138.

Return to the Summary Table.

Figure 6-1131. MSS_QSPI_BUS_SAFETY_ERR_STAT_DATA0 Register

31	30	29	28	27	26	25	24	23	22	21	20	19	18	17	16	15	14	13	12	11	10	9	8	7	6	5	4	3	2	1	0
RESERVED																d1								d0							
R-X																R-0h								R-0h							

Table 6-1138. MSS_QSPI_BUS_SAFETY_ERR_STAT_DATA0 Register Field Descriptions

Bit	Field	Type	Reset	Description
31-16	RESERVED	R	X	
15-8	d1	R	0h	
7-0	d0	R	0h	

6.2.7.217 MSS_QSPI_BUS_SAFETY_ERR_STAT_CMD Register (Offset = 360h) [reset = 0h]

MSS_QSPI_BUS_SAFETY_ERR_STAT_CMD is shown in Figure 6-1132 and described in Table 6-1139.

Return to the Summary Table.

Figure 6-1132. MSS_QSPI_BUS_SAFETY_ERR_STAT_CMD Register

31	30	29	28	27	26	25	24	23	22	21	20	19	18	17	16	15	14	13	12	11	10	9	8	7	6	5	4	3	2	1	0
stat																															
R-0h																															

Table 6-1139. MSS_QSPI_BUS_SAFETY_ERR_STAT_CMD Register Field Descriptions

Bit	Field	Type	Reset	Description
31-0	stat	R	0h	

Copyright © 2025 Texas Instruments Incorporated

6.2.7.218 MSS_QSPI_BUS_SAFETY_ERR_STAT_WRITE Register (Offset = 364h) [reset = 0h]

MSS_QSPI_BUS_SAFETY_ERR_STAT_WRITE is shown in Figure 6-1133 and described in Table 6-1140.

Return to the Summary Table.

Figure 6-1133. MSS_QSPI_BUS_SAFETY_ERR_STAT_WRITE Register

31	30	29	28	27	26	25	24	23	22	21	20	19	18	17	16	15	14	13	12	11	10	9	8	7	6	5	4	3	2	1	0
stat																															
R-0h																															

Table 6-1140. MSS_QSPI_BUS_SAFETY_ERR_STAT_WRITE Register Field Descriptions

Bit	Field	Type	Reset	Description
31-0	stat	R	0h	

6.2.7.219 MSS_QSPI_BUS_SAFETY_ERR_STAT_READ Register (Offset = 368h) [reset = 0h]

MSS_QSPI_BUS_SAFETY_ERR_STAT_READ is shown in Figure 6-1134 and described in Table 6-1141.

Return to the Summary Table.

Figure 6-1134. MSS_QSPI_BUS_SAFETY_ERR_STAT_READ Register

31	30	29	28	27	26	25	24	23	22	21	20	19	18	17	16	15	14	13	12	11	10	9	8	7	6	5	4	3	2	1	0
stat																															
R-0h																															

Table 6-1141. MSS_QSPI_BUS_SAFETY_ERR_STAT_READ Register Field Descriptions

Bit	Field	Type	Reset	Description
31-0	stat	R	0h	

6.2.7.220 MSS_QSPI_BUS_SAFETY_ERR_STAT_WRITERESP Register (Offset = 36Ch) [reset = 0h]

MSS_QSPI_BUS_SAFETY_ERR_STAT_WRITERESP is shown in Figure 6-1135 and described in Table 6-1142.

Return to the Summary Table.

Figure 6-1135. MSS_QSPI_BUS_SAFETY_ERR_STAT_WRITERESP Register

31	30	29	28	27	26	25	24	23	22	21	20	19	18	17	16	15	14	13	12	11	10	9	8	7	6	5	4	3	2	1	0
stat																															
R-0h																															

Table 6-1142. MSS_QSPI_BUS_SAFETY_ERR_STAT_WRITERESP Register Field Descriptions

Bit	Field	Type	Reset	Description
31-0	stat	R	0h	

6.2.7.221 HSM_DTHE_BUS_SAFETY_CTRL Register (Offset = 370h) [reset = X]

HSM_DTHE_BUS_SAFETY_CTRL is shown in Figure 6-1136 and described in Table 6-1143.

Return to the Summary Table.

Figure 6-1136. HSM_DTHE_BUS_SAFETY_CTRL Register

31	30	29	28	27	26	25	24
RESERVED							

Copyright © 2025 Texas Instruments Incorporated

Figure 6-1136. HSM_DTHE_BUS_SAFETY_CTRL Register (continued)

R/W-X							
23	22	21	20	19	18	17	16
type							
R-0h							
15	14	13	12	11	10	9	8
RESERVED							err_clear
R/W-X							R/W-0h
7	6	5	4	3	2	1	0
RESERVED						enable	
R/W-X						R/W-7h	

Table 6-1143. HSM_DTHE_BUS_SAFETY_CTRL Register Field Descriptions

Bit	Field	Type	Reset	Description
31-24	RESERVED	R/W	X	
23-16	type	R	0h	
15-9	RESERVED	R/W	X	
8	err_clear	R/W	0h	
7-3	RESERVED	R/W	X	
2-0	enable	R/W	7h	

6.2.7.222 HSM_DTHE_BUS_SAFETY_FI Register (Offset = 374h) [reset = X]

HSM_DTHE_BUS_SAFETY_FI is shown in Figure 6-1137 and described in Table 6-1144.

Return to the Summary Table.

Figure 6-1137. HSM_DTHE_BUS_SAFETY_FI Register

31	30	29	28	27	26	25	24
safe							
R/W-0h							
23	22	21	20	19	18	17	16
main							
R/W-0h							
15	14	13	12	11	10	9	8
data							
R/W-0h							
7	6	5	4	3	2	1	0
RESERVED		ded	sec	global_safe_req	global_main_req	global_safe	global_main
R/W-X		R/W-0h	R/W-0h	R/W-0h	R/W-0h	R/W-0h	R/W-0h

Table 6-1144. HSM_DTHE_BUS_SAFETY_FI Register Field Descriptions

Bit	Field	Type	Reset	Description
31-24	safe	R/W	0h	
23-16	main	R/W	0h	
15-8	data	R/W	0h	

Copyright © 2025 Texas Instruments Incorporated

Table 6-1144. HSM_DTHE_BUS_SAFETY_FI Register Field Descriptions (continued)

Bit	Field	Type	Reset	Description
7-6	RESERVED	R/W	X	
5	ded	R/W	0h	
4	sec	R/W	0h	
3	global_safe_req	R/W	0h	
2	global_main_req	R/W	0h	
1	global_safe	R/W	0h	
0	global_main	R/W	0h	

6.2.7.223 HSM_DTHE_BUS_SAFETY_ERR Register (Offset = 378h) [reset = 0h]

HSM_DTHE_BUS_SAFETY_ERR is shown in Figure 6-1138 and described in Table 6-1145.

Return to the Summary Table.

Figure 6-1138. HSM_DTHE_BUS_SAFETY_ERR Register

31	30	29	28	27	26	25	24	23	22	21	20	19	18	17	16
ded								sec							
R-0h								R-0h							
15	14	13	12	11	10	9	8	7	6	5	4	3	2	1	0
comp_check								comp_err							
R-0h								R-0h							

Table 6-1145. HSM_DTHE_BUS_SAFETY_ERR Register Field Descriptions

Bit	Field	Type	Reset	Description
31-24	ded	R	0h	
23-16	sec	R	0h	
15-8	comp_check	R	0h	
7-0	comp_err	R	0h	

6.2.7.224 HSM_DTHE_BUS_SAFETY_ERR_STAT_DATA0 Register (Offset = 37Ch) [reset = X]

HSM_DTHE_BUS_SAFETY_ERR_STAT_DATA0 is shown in Figure 6-1139 and described in Table 6-1146.

Return to the Summary Table.

Figure 6-1139. HSM_DTHE_BUS_SAFETY_ERR_STAT_DATA0 Register

31	30	29	28	27	26	25	24	23	22	21	20	19	18	17	16	15	14	13	12	11	10	9	8	7	6	5	4	3	2	1	0
RESERVED																d1								d0							
R-X																R-0h								R-0h							

Table 6-1146. HSM_DTHE_BUS_SAFETY_ERR_STAT_DATA0 Register Field Descriptions

Bit	Field	Type	Reset	Description
31-16	RESERVED	R	X	
15-8	d1	R	0h	
7-0	d0	R	0h	

Copyright © 2025 Texas Instruments Incorporated

6.2.7.225 HSM_DTHE_BUS_SAFETY_ERR_STAT_CMD Register (Offset = 380h) [reset = 0h]

HSM_DTHE_BUS_SAFETY_ERR_STAT_CMD is shown in Figure 6-1140 and described in Table 6-1147.

Return to the Summary Table.

Figure 6-1140. HSM_DTHE_BUS_SAFETY_ERR_STAT_CMD Register

31	30	29	28	27	26	25	24	23	22	21	20	19	18	17	16	15	14	13	12	11	10	9	8	7	6	5	4	3	2	1	0
stat																															
R-0h																															

Table 6-1147. HSM_DTHE_BUS_SAFETY_ERR_STAT_CMD Register Field Descriptions

Bit	Field	Type	Reset	Description
31-0	stat	R	0h	

6.2.7.226 HSM_DTHE_BUS_SAFETY_ERR_STAT_WRITE Register (Offset = 384h) [reset = 0h]

HSM_DTHE_BUS_SAFETY_ERR_STAT_WRITE is shown in Figure 6-1141 and described in Table 6-1148.

Return to the Summary Table.

Figure 6-1141. HSM_DTHE_BUS_SAFETY_ERR_STAT_WRITE Register

31	30	29	28	27	26	25	24	23	22	21	20	19	18	17	16	15	14	13	12	11	10	9	8	7	6	5	4	3	2	1	0
stat																															
R-0h																															

Table 6-1148. HSM_DTHE_BUS_SAFETY_ERR_STAT_WRITE Register Field Descriptions

Bit	Field	Type	Reset	Description
31-0	stat	R	0h	

6.2.7.227 HSM_DTHE_BUS_SAFETY_ERR_STAT_READ Register (Offset = 388h) [reset = 0h]

HSM_DTHE_BUS_SAFETY_ERR_STAT_READ is shown in Figure 6-1142 and described in Table 6-1149.

Return to the Summary Table.

Figure 6-1142. HSM_DTHE_BUS_SAFETY_ERR_STAT_READ Register

31	30	29	28	27	26	25	24	23	22	21	20	19	18	17	16	15	14	13	12	11	10	9	8	7	6	5	4	3	2	1	0
stat																															
R-0h																															

Table 6-1149. HSM_DTHE_BUS_SAFETY_ERR_STAT_READ Register Field Descriptions

Bit	Field	Type	Reset	Description
31-0	stat	R	0h	

6.2.7.228 HSM_DTHE_BUS_SAFETY_ERR_STAT_WRITERESP Register (Offset = 38Ch) [reset = 0h]

HSM_DTHE_BUS_SAFETY_ERR_STAT_WRITERESP is shown in Figure 6-1143 and described in Table 6-1150.

Return to the Summary Table.

Figure 6-1143. HSM_DTHE_BUS_SAFETY_ERR_STAT_WRITERESP Register

31	30	29	28	27	26	25	24	23	22	21	20	19	18	17	16	15	14	13	12	11	10	9	8	7	6	5	4	3	2	1	0

Copyright © 2025 Texas Instruments Incorporated

Figure 6-1143. HSM_DTHE_BUS_SAFETY_ERR_STAT_WRITERESP Register (continued)

stat
R-0h

Table 6-1150. HSM_DTHE_BUS_SAFETY_ERR_STAT_WRITERESP Register Field Descriptions

Bit	Field	Type	Reset	Description
31-0	stat	R	0h	

6.2.7.229 MSS_CPSW_BUS_SAFETY_CTRL Register (Offset = 390h) [reset = X]

MSS_CPSW_BUS_SAFETY_CTRL is shown in Figure 6-1144 and described in Table 6-1151.

Return to the Summary Table.

Figure 6-1144. MSS_CPSW_BUS_SAFETY_CTRL Register

31	30	29	28	27	26	25	24
RESERVED							
R/W-X							
23	22	21	20	19	18	17	16
type							
R-0h							
15	14	13	12	11	10	9	8
RESERVED							err_clear
R/W-X							R/W-0h
7	6	5	4	3	2	1	0
RESERVED						enable	
R/W-X						R/W-7h	

Table 6-1151. MSS_CPSW_BUS_SAFETY_CTRL Register Field Descriptions

Bit	Field	Type	Reset	Description
31-24	RESERVED	R/W	X	
23-16	type	R	0h	
15-9	RESERVED	R/W	X	
8	err_clear	R/W	0h	
7-3	RESERVED	R/W	X	
2-0	enable	R/W	7h	

6.2.7.230 MSS_CPSW_BUS_SAFETY_FI Register (Offset = 394h) [reset = X]

MSS_CPSW_BUS_SAFETY_FI is shown in Figure 6-1145 and described in Table 6-1152.

Return to the Summary Table.

Figure 6-1145. MSS_CPSW_BUS_SAFETY_FI Register

31	30	29	28	27	26	25	24
safe							
R/W-0h							
23	22	21	20	19	18	17	16
main							

Copyright © 2025 Texas Instruments Incorporated

Figure 6-1145. MSS_CPSW_BUS_SAFETY_FI Register (continued)

R/W-0h							
15	14	13	12	11	10	9	8
data							
R/W-0h							
7	6	5	4	3	2	1	0
RESERVED		ded	sec	global_safe_req	global_main_req	global_safe	global_main
R/W-X		R/W-0h	R/W-0h	R/W-0h	R/W-0h	R/W-0h	R/W-0h

Table 6-1152. MSS_CPSW_BUS_SAFETY_FI Register Field Descriptions

Bit	Field	Type	Reset	Description
31-24	safe	R/W	0h	
23-16	main	R/W	0h	
15-8	data	R/W	0h	
7-6	RESERVED	R/W	X	
5	ded	R/W	0h	
4	sec	R/W	0h	
3	global_safe_req	R/W	0h	
2	global_main_req	R/W	0h	
1	global_safe	R/W	0h	
0	global_main	R/W	0h	

6.2.7.231 MSS_CPSW_BUS_SAFETY_ERR Register (Offset = 398h) [reset = 0h]

MSS_CPSW_BUS_SAFETY_ERR is shown in Figure 6-1146 and described in Table 6-1153.

Return to the Summary Table.

Figure 6-1146. MSS_CPSW_BUS_SAFETY_ERR Register

31	30	29	28	27	26	25	24	23	22	21	20	19	18	17	16
ded								sec							
R-0h								R-0h							
15	14	13	12	11	10	9	8	7	6	5	4	3	2	1	0
comp_check								comp_err							
R-0h								R-0h							

Table 6-1153. MSS_CPSW_BUS_SAFETY_ERR Register Field Descriptions

Bit	Field	Type	Reset	Description
31-24	ded	R	0h	
23-16	sec	R	0h	
15-8	comp_check	R	0h	
7-0	comp_err	R	0h	

6.2.7.232 MSS_CPSW_BUS_SAFETY_ERR_STAT_DATA0 Register (Offset = 39Ch) [reset = X]

MSS_CPSW_BUS_SAFETY_ERR_STAT_DATA0 is shown in Figure 6-1147 and described in Table 6-1154.

Return to the Summary Table.

Copyright © 2025 Texas Instruments Incorporated

Figure 6-1147. MSS_CPSW_BUS_SAFETY_ERR_STAT_DATA0 Register

31	30	29	28	27	26	25	24	23	22	21	20	19	18	17	16	15	14	13	12	11	10	9	8	7	6	5	4	3	2	1	0
RESERVED																d1								d0							
R-X																R-0h								R-0h							

Table 6-1154. MSS_CPSW_BUS_SAFETY_ERR_STAT_DATA0 Register Field Descriptions

Bit	Field	Type	Reset	Description
31-16	RESERVED	R	X	
15-8	d1	R	0h	
7-0	d0	R	0h	

6.2.7.233 MSS_CPSW_BUS_SAFETY_ERR_STAT_CMD Register (Offset = 3A0h) [reset = 0h]

MSS_CPSW_BUS_SAFETY_ERR_STAT_CMD is shown in Figure 6-1148 and described in Table 6-1155.

Return to the Summary Table.

Figure 6-1148. MSS_CPSW_BUS_SAFETY_ERR_STAT_CMD Register

31	30	29	28	27	26	25	24	23	22	21	20	19	18	17	16	15	14	13	12	11	10	9	8	7	6	5	4	3	2	1	0
stat																															
R-0h																															

Table 6-1155. MSS_CPSW_BUS_SAFETY_ERR_STAT_CMD Register Field Descriptions

Bit	Field	Type	Reset	Description
31-0	stat	R	0h	

6.2.7.234 MSS_CPSW_BUS_SAFETY_ERR_STAT_WRITE Register (Offset = 3A4h) [reset = 0h]

MSS_CPSW_BUS_SAFETY_ERR_STAT_WRITE is shown in Figure 6-1149 and described in Table 6-1156.

Return to the Summary Table.

Figure 6-1149. MSS_CPSW_BUS_SAFETY_ERR_STAT_WRITE Register

31	30	29	28	27	26	25	24	23	22	21	20	19	18	17	16	15	14	13	12	11	10	9	8	7	6	5	4	3	2	1	0
stat																															
R-0h																															

Table 6-1156. MSS_CPSW_BUS_SAFETY_ERR_STAT_WRITE Register Field Descriptions

Bit	Field	Type	Reset	Description
31-0	stat	R	0h	

6.2.7.235 MSS_CPSW_BUS_SAFETY_ERR_STAT_READ Register (Offset = 3A8h) [reset = 0h]

MSS_CPSW_BUS_SAFETY_ERR_STAT_READ is shown in Figure 6-1150 and described in Table 6-1157.

Return to the Summary Table.

Figure 6-1150. MSS_CPSW_BUS_SAFETY_ERR_STAT_READ Register

31	30	29	28	27	26	25	24	23	22	21	20	19	18	17	16	15	14	13	12	11	10	9	8	7	6	5	4	3	2	1	0
stat																															
R-0h																															

Copyright © 2025 Texas Instruments Incorporated

Table 6-1157. MSS_CPSW_BUS_SAFETY_ERR_STAT_READ Register Field Descriptions

Bit	Field	Type	Reset	Description
31-0	stat	R	0h	

6.2.7.236 MSS_CPSW_BUS_SAFETY_ERR_STAT_WRITERESP Register (Offset = 3ACh) [reset = 0h]

MSS_CPSW_BUS_SAFETY_ERR_STAT_WRITERESP is shown in Figure 6-1151 and described in Table 6-1158.

Return to the Summary Table.

Figure 6-1151. MSS_CPSW_BUS_SAFETY_ERR_STAT_WRITERESP Register

31	30	29	28	27	26	25	24	23	22	21	20	19	18	17	16	15	14	13	12	11	10	9	8	7	6	5	4	3	2	1	0
stat																															
R-0h																															

Table 6-1158. MSS_CPSW_BUS_SAFETY_ERR_STAT_WRITERESP Register Field Descriptions

Bit	Field	Type	Reset	Description
31-0	stat	R	0h	

6.2.7.237 MSS_MCRC_BUS_SAFETY_CTRL Register (Offset = 3B0h) [reset = X]

MSS_MCRC_BUS_SAFETY_CTRL is shown in Figure 6-1152 and described in Table 6-1159.

Return to the Summary Table.

Figure 6-1152. MSS_MCRC_BUS_SAFETY_CTRL Register

31	30	29	28	27	26	25	24
RESERVED							
R/W-X							
23	22	21	20	19	18	17	16
type							
R-0h							
15	14	13	12	11	10	9	8
RESERVED							err_clear
R/W-X							R/W-0h
7	6	5	4	3	2	1	0
RESERVED						enable	
R/W-X						R/W-7h	

Table 6-1159. MSS_MCRC_BUS_SAFETY_CTRL Register Field Descriptions

Bit	Field	Type	Reset	Description
31-24	RESERVED	R/W	X	
23-16	type	R	0h	
15-9	RESERVED	R/W	X	
8	err_clear	R/W	0h	
7-3	RESERVED	R/W	X	
2-0	enable	R/W	7h	

Copyright © 2025 Texas Instruments Incorporated

6.2.7.238 MSS_MCRC_BUS_SAFETY_FI Register (Offset = 3B4h) [reset = X]

MSS_MCRC_BUS_SAFETY_FI is shown in Figure 6-1153 and described in Table 6-1160.

Return to the Summary Table.

Figure 6-1153. MSS_MCRC_BUS_SAFETY_FI Register

31	30	29	28	27	26	25	24
safe							
R/W-0h							
23	22	21	20	19	18	17	16
main							
R/W-0h							
15	14	13	12	11	10	9	8
data							
R/W-0h							
7	6	5	4	3	2	1	0
RESERVED		ded	sec	global_safe_req	global_main_req	global_safe	global_main
R/W-X		R/W-0h	R/W-0h	R/W-0h	R/W-0h	R/W-0h	R/W-0h

Table 6-1160. MSS_MCRC_BUS_SAFETY_FI Register Field Descriptions

Bit	Field	Type	Reset	Description
31-24	safe	R/W	0h	
23-16	main	R/W	0h	
15-8	data	R/W	0h	
7-6	RESERVED	R/W	X	
5	ded	R/W	0h	
4	sec	R/W	0h	
3	global_safe_req	R/W	0h	
2	global_main_req	R/W	0h	
1	global_safe	R/W	0h	
0	global_main	R/W	0h	

6.2.7.239 MSS_MCRC_BUS_SAFETY_ERR Register (Offset = 3B8h) [reset = 0h]

MSS_MCRC_BUS_SAFETY_ERR is shown in Figure 6-1154 and described in Table 6-1161.

Return to the Summary Table.

Figure 6-1154. MSS_MCRC_BUS_SAFETY_ERR Register

31	30	29	28	27	26	25	24	23	22	21	20	19	18	17	16
ded								sec							
R-0h								R-0h							
15	14	13	12	11	10	9	8	7	6	5	4	3	2	1	0
comp_check								comp_err							
R-0h								R-0h							

Copyright © 2025 Texas Instruments Incorporated

Table 6-1161. MSS_MCRC_BUS_SAFETY_ERR Register Field Descriptions

Bit	Field	Type	Reset	Description
31-24	ded	R	0h	
23-16	sec	R	0h	
15-8	comp_check	R	0h	
7-0	comp_err	R	0h	

6.2.7.240 MSS_MCRC_BUS_SAFETY_ERR_STAT_DATA0 Register (Offset = 3BCh) [reset = X]

MSS_MCRC_BUS_SAFETY_ERR_STAT_DATA0 is shown in Figure 6-1155 and described in Table 6-1162.

Return to the Summary Table.

Figure 6-1155. MSS_MCRC_BUS_SAFETY_ERR_STAT_DATA0 Register

31	30	29	28	27	26	25	24	23	22	21	20	19	18	17	16	15	14	13	12	11	10	9	8	7	6	5	4	3	2	1	0
RESERVED																d1								d0							
R-X																R-0h								R-0h							

Table 6-1162. MSS_MCRC_BUS_SAFETY_ERR_STAT_DATA0 Register Field Descriptions

Bit	Field	Type	Reset	Description
31-16	RESERVED	R	X	
15-8	d1	R	0h	
7-0	d0	R	0h	

6.2.7.241 MSS_MCRC_BUS_SAFETY_ERR_STAT_CMD Register (Offset = 3C0h) [reset = 0h]

MSS_MCRC_BUS_SAFETY_ERR_STAT_CMD is shown in Figure 6-1156 and described in Table 6-1163.

Return to the Summary Table.

Figure 6-1156. MSS_MCRC_BUS_SAFETY_ERR_STAT_CMD Register

31	30	29	28	27	26	25	24	23	22	21	20	19	18	17	16	15	14	13	12	11	10	9	8	7	6	5	4	3	2	1	0
stat																															
R-0h																															

Table 6-1163. MSS_MCRC_BUS_SAFETY_ERR_STAT_CMD Register Field Descriptions

Bit	Field	Type	Reset	Description
31-0	stat	R	0h	

6.2.7.242 MSS_MCRC_BUS_SAFETY_ERR_STAT_WRITE Register (Offset = 3C4h) [reset = 0h]

MSS_MCRC_BUS_SAFETY_ERR_STAT_WRITE is shown in Figure 6-1157 and described in Table 6-1164.

Return to the Summary Table.

Figure 6-1157. MSS_MCRC_BUS_SAFETY_ERR_STAT_WRITE Register

31	30	29	28	27	26	25	24	23	22	21	20	19	18	17	16	15	14	13	12	11	10	9	8	7	6	5	4	3	2	1	0
stat																															
R-0h																															

Copyright © 2025 Texas Instruments Incorporated

Table 6-1164. MSS_MCRC_BUS_SAFETY_ERR_STAT_WRITE Register Field Descriptions

Bit	Field	Type	Reset	Description
31-0	stat	R	0h	

6.2.7.243 MSS_MCRC_BUS_SAFETY_ERR_STAT_READ Register (Offset = 3C8h) [reset = 0h]

MSS_MCRC_BUS_SAFETY_ERR_STAT_READ is shown in Figure 6-1158 and described in Table 6-1165.

Return to the Summary Table.

Figure 6-1158. MSS_MCRC_BUS_SAFETY_ERR_STAT_READ Register

31	30	29	28	27	26	25	24	23	22	21	20	19	18	17	16	15	14	13	12	11	10	9	8	7	6	5	4	3	2	1	0
stat																															
R-0h																															

Table 6-1165. MSS_MCRC_BUS_SAFETY_ERR_STAT_READ Register Field Descriptions

Bit	Field	Type	Reset	Description
31-0	stat	R	0h	

6.2.7.244 MSS_MCRC_BUS_SAFETY_ERR_STAT_WRITERESP Register (Offset = 3CCh) [reset = 0h]

MSS_MCRC_BUS_SAFETY_ERR_STAT_WRITERESP is shown in Figure 6-1159 and described in Table 6-1166.

Return to the Summary Table.

Figure 6-1159. MSS_MCRC_BUS_SAFETY_ERR_STAT_WRITERESP Register

31	30	29	28	27	26	25	24	23	22	21	20	19	18	17	16	15	14	13	12	11	10	9	8	7	6	5	4	3	2	1	0
stat																															
R-0h																															

Table 6-1166. MSS_MCRC_BUS_SAFETY_ERR_STAT_WRITERESP Register Field Descriptions

Bit	Field	Type	Reset	Description
31-0	stat	R	0h	

6.2.7.245 MSS_PCR_BUS_SAFETY_CTRL Register (Offset = 3D0h) [reset = X]

MSS_PCR_BUS_SAFETY_CTRL is shown in Figure 6-1160 and described in Table 6-1167.

Return to the Summary Table.

Figure 6-1160. MSS_PCR_BUS_SAFETY_CTRL Register

31	30	29	28	27	26	25	24
RESERVED							
R/W-X							
23	22	21	20	19	18	17	16
type							
R-0h							
15	14	13	12	11	10	9	8
RESERVED							err_clear
R/W-X							R/W-0h

Copyright © 2025 Texas Instruments Incorporated

Figure 6-1160. MSS_PCR_BUS_SAFETY_CTRL Register (continued)

7	6	5	4	3	2	1	0
RESERVED						enable	
R/W-X						R/W-7h	

Table 6-1167. MSS_PCR_BUS_SAFETY_CTRL Register Field Descriptions

Bit	Field	Type	Reset	Description
31-24	RESERVED	R/W	X	
23-16	type	R	0h	
15-9	RESERVED	R/W	X	
8	err_clear	R/W	0h	
7-3	RESERVED	R/W	X	
2-0	enable	R/W	7h	

6.2.7.246 MSS_PCR_BUS_SAFETY_FI Register (Offset = 3D4h) [reset = X]

MSS_PCR_BUS_SAFETY_FI is shown in Figure 6-1161 and described in Table 6-1168.

Return to the Summary Table.

Figure 6-1161. MSS_PCR_BUS_SAFETY_FI Register

31	30	29	28	27	26	25	24
safe							
R/W-0h							
23	22	21	20	19	18	17	16
main							
R/W-0h							
15	14	13	12	11	10	9	8
data							
R/W-0h							
7	6	5	4	3	2	1	0
RESERVED		ded	sec	global_safe_req	global_main_req	global_safe	global_main
R/W-X		R/W-0h	R/W-0h	R/W-0h	R/W-0h	R/W-0h	R/W-0h

Table 6-1168. MSS_PCR_BUS_SAFETY_FI Register Field Descriptions

Bit	Field	Type	Reset	Description
31-24	safe	R/W	0h	
23-16	main	R/W	0h	
15-8	data	R/W	0h	
7-6	RESERVED	R/W	X	
5	ded	R/W	0h	
4	sec	R/W	0h	
3	global_safe_req	R/W	0h	
2	global_main_req	R/W	0h	
1	global_safe	R/W	0h	
0	global_main	R/W	0h	

Copyright © 2025 Texas Instruments Incorporated

6.2.7.247 MSS_PCR_BUS_SAFETY_ERR Register (Offset = 3D8h) [reset = 0h]

MSS_PCR_BUS_SAFETY_ERR is shown in Figure 6-1162 and described in Table 6-1169.

Return to the Summary Table.

Figure 6-1162. MSS_PCR_BUS_SAFETY_ERR Register

31	30	29	28	27	26	25	24	23	22	21	20	19	18	17	16
ded								sec							
R-0h								R-0h							
15	14	13	12	11	10	9	8	7	6	5	4	3	2	1	0
comp_check								comp_err							
R-0h								R-0h							

Table 6-1169. MSS_PCR_BUS_SAFETY_ERR Register Field Descriptions

Bit	Field	Type	Reset	Description
31-24	ded	R	0h	
23-16	sec	R	0h	
15-8	comp_check	R	0h	
7-0	comp_err	R	0h	

6.2.7.248 MSS_PCR_BUS_SAFETY_ERR_STAT_DATA0 Register (Offset = 3DCh) [reset = X]

MSS_PCR_BUS_SAFETY_ERR_STAT_DATA0 is shown in Figure 6-1163 and described in Table 6-1170.

Return to the Summary Table.

Figure 6-1163. MSS_PCR_BUS_SAFETY_ERR_STAT_DATA0 Register

31	30	29	28	27	26	25	24	23	22	21	20	19	18	17	16	15	14	13	12	11	10	9	8	7	6	5	4	3	2	1	0
RESERVED																d1								d0							
R-X																R-0h								R-0h							

Table 6-1170. MSS_PCR_BUS_SAFETY_ERR_STAT_DATA0 Register Field Descriptions

Bit	Field	Type	Reset	Description
31-16	RESERVED	R	X	
15-8	d1	R	0h	
7-0	d0	R	0h	

6.2.7.249 MSS_PCR_BUS_SAFETY_ERR_STAT_CMD Register (Offset = 3E0h) [reset = 0h]

MSS_PCR_BUS_SAFETY_ERR_STAT_CMD is shown in Figure 6-1164 and described in Table 6-1171.

Return to the Summary Table.

Figure 6-1164. MSS_PCR_BUS_SAFETY_ERR_STAT_CMD Register

31	30	29	28	27	26	25	24	23	22	21	20	19	18	17	16	15	14	13	12	11	10	9	8	7	6	5	4	3	2	1	0
stat																															
R-0h																															

Table 6-1171. MSS_PCR_BUS_SAFETY_ERR_STAT_CMD Register Field Descriptions

Bit	Field	Type	Reset	Description
31-0	stat	R	0h	

Copyright © 2025 Texas Instruments Incorporated

6.2.7.250 MSS_PCR_BUS_SAFETY_ERR_STAT_WRITE Register (Offset = 3E4h) [reset = 0h]

MSS_PCR_BUS_SAFETY_ERR_STAT_WRITE is shown in Figure 6-1165 and described in Table 6-1172.

Return to the Summary Table.

Figure 6-1165. MSS_PCR_BUS_SAFETY_ERR_STAT_WRITE Register

31	30	29	28	27	26	25	24	23	22	21	20	19	18	17	16	15	14	13	12	11	10	9	8	7	6	5	4	3	2	1	0
stat																															
R-0h																															

Table 6-1172. MSS_PCR_BUS_SAFETY_ERR_STAT_WRITE Register Field Descriptions

Bit	Field	Type	Reset	Description
31-0	stat	R	0h	

6.2.7.251 MSS_PCR_BUS_SAFETY_ERR_STAT_READ Register (Offset = 3E8h) [reset = 0h]

MSS_PCR_BUS_SAFETY_ERR_STAT_READ is shown in Figure 6-1166 and described in Table 6-1173.

Return to the Summary Table.

Figure 6-1166. MSS_PCR_BUS_SAFETY_ERR_STAT_READ Register

31	30	29	28	27	26	25	24	23	22	21	20	19	18	17	16	15	14	13	12	11	10	9	8	7	6	5	4	3	2	1	0
stat																															
R-0h																															

Table 6-1173. MSS_PCR_BUS_SAFETY_ERR_STAT_READ Register Field Descriptions

Bit	Field	Type	Reset	Description
31-0	stat	R	0h	

6.2.7.252 MSS_PCR_BUS_SAFETY_ERR_STAT_WRITERESP Register (Offset = 3ECh) [reset = 0h]

MSS_PCR_BUS_SAFETY_ERR_STAT_WRITERESP is shown in Figure 6-1167 and described in Table 6-1174.

Return to the Summary Table.

Figure 6-1167. MSS_PCR_BUS_SAFETY_ERR_STAT_WRITERESP Register

31	30	29	28	27	26	25	24	23	22	21	20	19	18	17	16	15	14	13	12	11	10	9	8	7	6	5	4	3	2	1	0
stat																															
R-0h																															

Table 6-1174. MSS_PCR_BUS_SAFETY_ERR_STAT_WRITERESP Register Field Descriptions

Bit	Field	Type	Reset	Description
31-0	stat	R	0h	

6.2.7.253 MSS_PCR2_BUS_SAFETY_CTRL Register (Offset = 3F0h) [reset = X]

MSS_PCR2_BUS_SAFETY_CTRL is shown in Figure 6-1168 and described in Table 6-1175.

Return to the Summary Table.

Figure 6-1168. MSS_PCR2_BUS_SAFETY_CTRL Register

31	30	29	28	27	26	25	24
RESERVED							

Copyright © 2025 Texas Instruments Incorporated

Figure 6-1168. MSS_PCR2_BUS_SAFETY_CTRL Register (continued)

R/W-X							
23	22	21	20	19	18	17	16
type							
R-0h							
15	14	13	12	11	10	9	8
RESERVED							err_clear
R/W-X							R/W-0h
7	6	5	4	3	2	1	0
RESERVED						enable	
R/W-X						R/W-7h	

Table 6-1175. MSS_PCR2_BUS_SAFETY_CTRL Register Field Descriptions

Bit	Field	Type	Reset	Description
31-24	RESERVED	R/W	X	
23-16	type	R	0h	
15-9	RESERVED	R/W	X	
8	err_clear	R/W	0h	
7-3	RESERVED	R/W	X	
2-0	enable	R/W	7h	

6.2.7.254 MSS_PCR2_BUS_SAFETY_FI Register (Offset = 3F4h) [reset = X]

MSS_PCR2_BUS_SAFETY_FI is shown in Figure 6-1169 and described in Table 6-1176.

Return to the Summary Table.

Figure 6-1169. MSS_PCR2_BUS_SAFETY_FI Register

31	30	29	28	27	26	25	24
safe							
R/W-0h							
23	22	21	20	19	18	17	16
main							
R/W-0h							
15	14	13	12	11	10	9	8
data							
R/W-0h							
7	6	5	4	3	2	1	0
RESERVED		ded	sec	global_safe_req	global_main_req	global_safe	global_main
R/W-X		R/W-0h	R/W-0h	R/W-0h	R/W-0h	R/W-0h	R/W-0h

Table 6-1176. MSS_PCR2_BUS_SAFETY_FI Register Field Descriptions

Bit	Field	Type	Reset	Description
31-24	safe	R/W	0h	
23-16	main	R/W	0h	
15-8	data	R/W	0h	

Copyright © 2025 Texas Instruments Incorporated

Table 6-1176. MSS_PCR2_BUS_SAFETY_FI Register Field Descriptions (continued)

Bit	Field	Type	Reset	Description
7-6	RESERVED	R/W	X	
5	ded	R/W	0h	
4	sec	R/W	0h	
3	global_safe_req	R/W	0h	
2	global_main_req	R/W	0h	
1	global_safe	R/W	0h	
0	global_main	R/W	0h	

6.2.7.255 MSS_PCR2_BUS_SAFETY_ERR Register (Offset = 3F8h) [reset = 0h]

MSS_PCR2_BUS_SAFETY_ERR is shown in Figure 6-1170 and described in Table 6-1177.

Return to the Summary Table.

Figure 6-1170. MSS_PCR2_BUS_SAFETY_ERR Register

31	30	29	28	27	26	25	24	23	22	21	20	19	18	17	16
ded								sec							
R-0h								R-0h							
15	14	13	12	11	10	9	8	7	6	5	4	3	2	1	0
comp_check								comp_err							
R-0h								R-0h							

Table 6-1177. MSS_PCR2_BUS_SAFETY_ERR Register Field Descriptions

Bit	Field	Type	Reset	Description
31-24	ded	R	0h	
23-16	sec	R	0h	
15-8	comp_check	R	0h	
7-0	comp_err	R	0h	

6.2.7.256 MSS_PCR2_BUS_SAFETY_ERR_STAT_DATA0 Register (Offset = 3FCh) [reset = X]

MSS_PCR2_BUS_SAFETY_ERR_STAT_DATA0 is shown in Figure 6-1171 and described in Table 6-1178.

Return to the Summary Table.

Figure 6-1171. MSS_PCR2_BUS_SAFETY_ERR_STAT_DATA0 Register

31	30	29	28	27	26	25	24	23	22	21	20	19	18	17	16	15	14	13	12	11	10	9	8	7	6	5	4	3	2	1	0
RESERVED																d1								d0							
R-X																R-0h								R-0h							

Table 6-1178. MSS_PCR2_BUS_SAFETY_ERR_STAT_DATA0 Register Field Descriptions

Bit	Field	Type	Reset	Description
31-16	RESERVED	R	X	
15-8	d1	R	0h	
7-0	d0	R	0h	

Copyright © 2025 Texas Instruments Incorporated

6.2.7.257 MSS_PCR2_BUS_SAFETY_ERR_STAT_CMD Register (Offset = 400h) [reset = 0h]

MSS_PCR2_BUS_SAFETY_ERR_STAT_CMD is shown in Figure 6-1172 and described in Table 6-1179.

Return to the Summary Table.

Figure 6-1172. MSS_PCR2_BUS_SAFETY_ERR_STAT_CMD Register

31	30	29	28	27	26	25	24	23	22	21	20	19	18	17	16	15	14	13	12	11	10	9	8	7	6	5	4	3	2	1	0
stat																															
R-0h																															

Table 6-1179. MSS_PCR2_BUS_SAFETY_ERR_STAT_CMD Register Field Descriptions

Bit	Field	Type	Reset	Description
31-0	stat	R	0h	

6.2.7.258 MSS_PCR2_BUS_SAFETY_ERR_STAT_WRITE Register (Offset = 404h) [reset = 0h]

MSS_PCR2_BUS_SAFETY_ERR_STAT_WRITE is shown in Figure 6-1173 and described in Table 6-1180.

Return to the Summary Table.

Figure 6-1173. MSS_PCR2_BUS_SAFETY_ERR_STAT_WRITE Register

31	30	29	28	27	26	25	24	23	22	21	20	19	18	17	16	15	14	13	12	11	10	9	8	7	6	5	4	3	2	1	0
stat																															
R-0h																															

Table 6-1180. MSS_PCR2_BUS_SAFETY_ERR_STAT_WRITE Register Field Descriptions

Bit	Field	Type	Reset	Description
31-0	stat	R	0h	

6.2.7.259 MSS_PCR2_BUS_SAFETY_ERR_STAT_READ Register (Offset = 408h) [reset = 0h]

MSS_PCR2_BUS_SAFETY_ERR_STAT_READ is shown in Figure 6-1174 and described in Table 6-1181.

Return to the Summary Table.

Figure 6-1174. MSS_PCR2_BUS_SAFETY_ERR_STAT_READ Register

31	30	29	28	27	26	25	24	23	22	21	20	19	18	17	16	15	14	13	12	11	10	9	8	7	6	5	4	3	2	1	0
stat																															
R-0h																															

Table 6-1181. MSS_PCR2_BUS_SAFETY_ERR_STAT_READ Register Field Descriptions

Bit	Field	Type	Reset	Description
31-0	stat	R	0h	

6.2.7.260 MSS_PCR2_BUS_SAFETY_ERR_STAT_WRITERESP Register (Offset = 40Ch) [reset = 0h]

MSS_PCR2_BUS_SAFETY_ERR_STAT_WRITERESP is shown in Figure 6-1175 and described in Table 6-1182.

Return to the Summary Table.

Figure 6-1175. MSS_PCR2_BUS_SAFETY_ERR_STAT_WRITERESP Register

31	30	29	28	27	26	25	24	23	22	21	20	19	18	17	16	15	14	13	12	11	10	9	8	7	6	5	4	3	2	1	0

Copyright © 2025 Texas Instruments Incorporated

Figure 6-1175. MSS_PCR2_BUS_SAFETY_ERR_STAT_WRITERESP Register (continued)

stat
R-0h

Table 6-1182. MSS_PCR2_BUS_SAFETY_ERR_STAT_WRITERESP Register Field Descriptions

Bit	Field	Type	Reset	Description
31-0	stat	R	0h	

6.2.7.261 HSM_M_BUS_SAFETY_CTRL Register (Offset = 410h) [reset = X]

HSM_M_BUS_SAFETY_CTRL is shown in Figure 6-1176 and described in Table 6-1183.

Return to the Summary Table.

Figure 6-1176. HSM_M_BUS_SAFETY_CTRL Register

31	30	29	28	27	26	25	24
RESERVED							
R/W-X							
23	22	21	20	19	18	17	16
type							
R-0h							
15	14	13	12	11	10	9	8
RESERVED							err_clear
R/W-X							R/W-0h
7	6	5	4	3	2	1	0
RESERVED						enable	
R/W-X						R/W-7h	

Table 6-1183. HSM_M_BUS_SAFETY_CTRL Register Field Descriptions

Bit	Field	Type	Reset	Description
31-24	RESERVED	R/W	X	
23-16	type	R	0h	
15-9	RESERVED	R/W	X	
8	err_clear	R/W	0h	
7-3	RESERVED	R/W	X	
2-0	enable	R/W	7h	

6.2.7.262 HSM_M_BUS_SAFETY_FI Register (Offset = 414h) [reset = X]

HSM_M_BUS_SAFETY_FI is shown in Figure 6-1177 and described in Table 6-1184.

Return to the Summary Table.

Figure 6-1177. HSM_M_BUS_SAFETY_FI Register

31	30	29	28	27	26	25	24
safe							
R/W-0h							
23	22	21	20	19	18	17	16
main							

Copyright © 2025 Texas Instruments Incorporated

Figure 6-1177. HSM_M_BUS_SAFETY_FI Register (continued)

R/W-0h							
15	14	13	12	11	10	9	8
data							
R/W-0h							
7	6	5	4	3	2	1	0
RESERVED		ded	sec	global_safe_req	global_main_req	global_safe	global_main
R/W-X		R/W-0h	R/W-0h	R/W-0h	R/W-0h	R/W-0h	R/W-0h

Table 6-1184. HSM_M_BUS_SAFETY_FI Register Field Descriptions

Bit	Field	Type	Reset	Description
31-24	safe	R/W	0h	
23-16	main	R/W	0h	
15-8	data	R/W	0h	
7-6	RESERVED	R/W	X	
5	ded	R/W	0h	
4	sec	R/W	0h	
3	global_safe_req	R/W	0h	
2	global_main_req	R/W	0h	
1	global_safe	R/W	0h	
0	global_main	R/W	0h	

6.2.7.263 HSM_M_BUS_SAFETY_ERR Register (Offset = 418h) [reset = 0h]

HSM_M_BUS_SAFETY_ERR is shown in Figure 6-1178 and described in Table 6-1185.

Return to the Summary Table.

Figure 6-1178. HSM_M_BUS_SAFETY_ERR Register

31	30	29	28	27	26	25	24	23	22	21	20	19	18	17	16
ded								sec							
R-0h								R-0h							
15	14	13	12	11	10	9	8	7	6	5	4	3	2	1	0
comp_check								comp_err							
R-0h								R-0h							

Table 6-1185. HSM_M_BUS_SAFETY_ERR Register Field Descriptions

Bit	Field	Type	Reset	Description
31-24	ded	R	0h	
23-16	sec	R	0h	
15-8	comp_check	R	0h	
7-0	comp_err	R	0h	

6.2.7.264 HSM_M_BUS_SAFETY_ERR_STAT_DATA0 Register (Offset = 41Ch) [reset = X]

HSM_M_BUS_SAFETY_ERR_STAT_DATA0 is shown in Figure 6-1179 and described in Table 6-1186.

Return to the Summary Table.

Copyright © 2025 Texas Instruments Incorporated

Figure 6-1179. HSM_M_BUS_SAFETY_ERR_STAT_DATA0 Register

31	30	29	28	27	26	25	24	23	22	21	20	19	18	17	16	15	14	13	12	11	10	9	8	7	6	5	4	3	2	1	0
RESERVED																d1								d0							
R-X																R-0h								R-0h							

Table 6-1186. HSM_M_BUS_SAFETY_ERR_STAT_DATA0 Register Field Descriptions

Bit	Field	Type	Reset	Description
31-16	RESERVED	R	X	
15-8	d1	R	0h	
7-0	d0	R	0h	

6.2.7.265 HSM_M_BUS_SAFETY_ERR_STAT_CMD Register (Offset = 420h) [reset = 0h]

HSM_M_BUS_SAFETY_ERR_STAT_CMD is shown in Figure 6-1180 and described in Table 6-1187.

Return to the Summary Table.

Figure 6-1180. HSM_M_BUS_SAFETY_ERR_STAT_CMD Register

31	30	29	28	27	26	25	24	23	22	21	20	19	18	17	16	15	14	13	12	11	10	9	8	7	6	5	4	3	2	1	0
stat																															
R-0h																															

Table 6-1187. HSM_M_BUS_SAFETY_ERR_STAT_CMD Register Field Descriptions

Bit	Field	Type	Reset	Description
31-0	stat	R	0h	

6.2.7.266 HSM_M_BUS_SAFETY_ERR_STAT_WRITE Register (Offset = 424h) [reset = 0h]

HSM_M_BUS_SAFETY_ERR_STAT_WRITE is shown in Figure 6-1181 and described in Table 6-1188.

Return to the Summary Table.

Figure 6-1181. HSM_M_BUS_SAFETY_ERR_STAT_WRITE Register

31	30	29	28	27	26	25	24	23	22	21	20	19	18	17	16	15	14	13	12	11	10	9	8	7	6	5	4	3	2	1	0
stat																															
R-0h																															

Table 6-1188. HSM_M_BUS_SAFETY_ERR_STAT_WRITE Register Field Descriptions

Bit	Field	Type	Reset	Description
31-0	stat	R	0h	

6.2.7.267 HSM_M_BUS_SAFETY_ERR_STAT_READ Register (Offset = 428h) [reset = 0h]

HSM_M_BUS_SAFETY_ERR_STAT_READ is shown in Figure 6-1182 and described in Table 6-1189.

Return to the Summary Table.

Figure 6-1182. HSM_M_BUS_SAFETY_ERR_STAT_READ Register

31	30	29	28	27	26	25	24	23	22	21	20	19	18	17	16	15	14	13	12	11	10	9	8	7	6	5	4	3	2	1	0
stat																															
R-0h																															

Copyright © 2025 Texas Instruments Incorporated

Table 6-1189. HSM_M_BUS_SAFETY_ERR_STAT_READ Register Field Descriptions

Bit	Field	Type	Reset	Description
31-0	stat	R	0h	

6.2.7.268 HSM_M_BUS_SAFETY_ERR_STAT_WRITERESP Register (Offset = 42Ch) [reset = 0h]

HSM_M_BUS_SAFETY_ERR_STAT_WRITERESP is shown in Figure 6-1183 and described in Table 6-1190.

Return to the Summary Table.

Figure 6-1183. HSM_M_BUS_SAFETY_ERR_STAT_WRITERESP Register

31	30	29	28	27	26	25	24	23	22	21	20	19	18	17	16	15	14	13	12	11	10	9	8	7	6	5	4	3	2	1	0
stat																															
R-0h																															

Table 6-1190. HSM_M_BUS_SAFETY_ERR_STAT_WRITERESP Register Field Descriptions

Bit	Field	Type	Reset	Description
31-0	stat	R	0h	

6.2.7.269 HSM_S_BUS_SAFETY_CTRL Register (Offset = 430h) [reset = X]

HSM_S_BUS_SAFETY_CTRL is shown in Figure 6-1184 and described in Table 6-1191.

Return to the Summary Table.

Figure 6-1184. HSM_S_BUS_SAFETY_CTRL Register

31	30	29	28	27	26	25	24
RESERVED							
R/W-X							
23	22	21	20	19	18	17	16
type							
R-0h							
15	14	13	12	11	10	9	8
RESERVED							err_clear
R/W-X							R/W-0h
7	6	5	4	3	2	1	0
RESERVED						enable	
R/W-X						R/W-7h	

Table 6-1191. HSM_S_BUS_SAFETY_CTRL Register Field Descriptions

Bit	Field	Type	Reset	Description
31-24	RESERVED	R/W	X	
23-16	type	R	0h	
15-9	RESERVED	R/W	X	
8	err_clear	R/W	0h	
7-3	RESERVED	R/W	X	
2-0	enable	R/W	7h	

Copyright © 2025 Texas Instruments Incorporated

6.2.7.270 HSM_S_BUS_SAFETY_FI Register (Offset = 434h) [reset = X]

HSM_S_BUS_SAFETY_FI is shown in Figure 6-1185 and described in Table 6-1192.

Return to the Summary Table.

Figure 6-1185. HSM_S_BUS_SAFETY_FI Register

31	30	29	28	27	26	25	24
safe							
R/W-0h							
23	22	21	20	19	18	17	16
main							
R/W-0h							
15	14	13	12	11	10	9	8
data							
R/W-0h							
7	6	5	4	3	2	1	0
RESERVED		ded	sec	global_safe_req	global_main_req	global_safe	global_main
R/W-X		R/W-0h	R/W-0h	R/W-0h	R/W-0h	R/W-0h	R/W-0h

Table 6-1192. HSM_S_BUS_SAFETY_FI Register Field Descriptions

Bit	Field	Type	Reset	Description
31-24	safe	R/W	0h	
23-16	main	R/W	0h	
15-8	data	R/W	0h	
7-6	RESERVED	R/W	X	
5	ded	R/W	0h	
4	sec	R/W	0h	
3	global_safe_req	R/W	0h	
2	global_main_req	R/W	0h	
1	global_safe	R/W	0h	
0	global_main	R/W	0h	

6.2.7.271 HSM_S_BUS_SAFETY_ERR Register (Offset = 438h) [reset = 0h]

HSM_S_BUS_SAFETY_ERR is shown in Figure 6-1186 and described in Table 6-1193.

Return to the Summary Table.

Figure 6-1186. HSM_S_BUS_SAFETY_ERR Register

31	30	29	28	27	26	25	24	23	22	21	20	19	18	17	16
ded								sec							
R-0h								R-0h							
15	14	13	12	11	10	9	8	7	6	5	4	3	2	1	0
comp_check								comp_err							
R-0h								R-0h							

Copyright © 2025 Texas Instruments Incorporated

Table 6-1193. HSM_S_BUS_SAFETY_ERR Register Field Descriptions

Bit	Field	Type	Reset	Description
31-24	ded	R	0h	
23-16	sec	R	0h	
15-8	comp_check	R	0h	
7-0	comp_err	R	0h	

6.2.7.272 HSM_S_BUS_SAFETY_ERR_STAT_DATA0 Register (Offset = 43Ch) [reset = X]

HSM_S_BUS_SAFETY_ERR_STAT_DATA0 is shown in Figure 6-1187 and described in Table 6-1194.

Return to the Summary Table.

Figure 6-1187. HSM_S_BUS_SAFETY_ERR_STAT_DATA0 Register

31	30	29	28	27	26	25	24	23	22	21	20	19	18	17	16	15	14	13	12	11	10	9	8	7	6	5	4	3	2	1	0
RESERVED																d1								d0							
R-X																R-0h								R-0h							

Table 6-1194. HSM_S_BUS_SAFETY_ERR_STAT_DATA0 Register Field Descriptions

Bit	Field	Type	Reset	Description
31-16	RESERVED	R	X	
15-8	d1	R	0h	
7-0	d0	R	0h	

6.2.7.273 HSM_S_BUS_SAFETY_ERR_STAT_CMD Register (Offset = 440h) [reset = 0h]

HSM_S_BUS_SAFETY_ERR_STAT_CMD is shown in Figure 6-1188 and described in Table 6-1195.

Return to the Summary Table.

Figure 6-1188. HSM_S_BUS_SAFETY_ERR_STAT_CMD Register

31	30	29	28	27	26	25	24	23	22	21	20	19	18	17	16	15	14	13	12	11	10	9	8	7	6	5	4	3	2	1	0
stat																															
R-0h																															

Table 6-1195. HSM_S_BUS_SAFETY_ERR_STAT_CMD Register Field Descriptions

Bit	Field	Type	Reset	Description
31-0	stat	R	0h	

6.2.7.274 HSM_S_BUS_SAFETY_ERR_STAT_WRITE Register (Offset = 444h) [reset = 0h]

HSM_S_BUS_SAFETY_ERR_STAT_WRITE is shown in Figure 6-1189 and described in Table 6-1196.

Return to the Summary Table.

Figure 6-1189. HSM_S_BUS_SAFETY_ERR_STAT_WRITE Register

31	30	29	28	27	26	25	24	23	22	21	20	19	18	17	16	15	14	13	12	11	10	9	8	7	6	5	4	3	2	1	0
stat																															
R-0h																															

Copyright © 2025 Texas Instruments Incorporated

Table 6-1196. HSM_S_BUS_SAFETY_ERR_STAT_WRITE Register Field Descriptions

Bit	Field	Type	Reset	Description
31-0	stat	R	0h	

6.2.7.275 HSM_S_BUS_SAFETY_ERR_STAT_READ Register (Offset = 448h) [reset = 0h]

HSM_S_BUS_SAFETY_ERR_STAT_READ is shown in Figure 6-1190 and described in Table 6-1197.

Return to the Summary Table.

Figure 6-1190. HSM_S_BUS_SAFETY_ERR_STAT_READ Register

31	30	29	28	27	26	25	24	23	22	21	20	19	18	17	16	15	14	13	12	11	10	9	8	7	6	5	4	3	2	1	0
stat																															
R-0h																															

Table 6-1197. HSM_S_BUS_SAFETY_ERR_STAT_READ Register Field Descriptions

Bit	Field	Type	Reset	Description
31-0	stat	R	0h	

6.2.7.276 HSM_S_BUS_SAFETY_ERR_STAT_WRITERESP Register (Offset = 44Ch) [reset = 0h]

HSM_S_BUS_SAFETY_ERR_STAT_WRITERESP is shown in Figure 6-1191 and described in Table 6-1198.

Return to the Summary Table.

Figure 6-1191. HSM_S_BUS_SAFETY_ERR_STAT_WRITERESP Register

31	30	29	28	27	26	25	24	23	22	21	20	19	18	17	16	15	14	13	12	11	10	9	8	7	6	5	4	3	2	1	0
stat																															
R-0h																															

Table 6-1198. HSM_S_BUS_SAFETY_ERR_STAT_WRITERESP Register Field Descriptions

Bit	Field	Type	Reset	Description
31-0	stat	R	0h	

6.2.7.277 DAP_R232_BUS_SAFETY_CTRL Register (Offset = 450h) [reset = X]

DAP_R232_BUS_SAFETY_CTRL is shown in Figure 6-1192 and described in Table 6-1199.

Return to the Summary Table.

Figure 6-1192. DAP_R232_BUS_SAFETY_CTRL Register

31	30	29	28	27	26	25	24
RESERVED							
R/W-X							
23	22	21	20	19	18	17	16
type							
R-0h							
15	14	13	12	11	10	9	8
RESERVED							err_clear
R/W-X							R/W-0h
7	6	5	4	3	2	1	0

Copyright © 2025 Texas Instruments Incorporated

Figure 6-1192. DAP_R232_BUS_SAFETY_CTRL Register (continued)

RESERVED	enable
R/W-X	R/W-7h

Table 6-1199. DAP_R232_BUS_SAFETY_CTRL Register Field Descriptions

Bit	Field	Type	Reset	Description
31-24	RESERVED	R/W	X	
23-16	type	R	0h	
15-9	RESERVED	R/W	X	
8	err_clear	R/W	0h	
7-3	RESERVED	R/W	X	
2-0	enable	R/W	7h	

6.2.7.278 DAP_R232_BUS_SAFETY_FI Register (Offset = 454h) [reset = X]

DAP_R232_BUS_SAFETY_FI is shown in Figure 6-1193 and described in Table 6-1200.

Return to the Summary Table.

Figure 6-1193. DAP_R232_BUS_SAFETY_FI Register

31	30	29	28	27	26	25	24
safe							
R/W-0h							
23	22	21	20	19	18	17	16
main							
R/W-0h							
15	14	13	12	11	10	9	8
data							
R/W-0h							
7	6	5	4	3	2	1	0
RESERVED		ded	sec	global_safe_req	global_main_req	global_safe	global_main
R/W-X		R/W-0h	R/W-0h	R/W-0h	R/W-0h	R/W-0h	R/W-0h

Table 6-1200. DAP_R232_BUS_SAFETY_FI Register Field Descriptions

Bit	Field	Type	Reset	Description
31-24	safe	R/W	0h	
23-16	main	R/W	0h	
15-8	data	R/W	0h	
7-6	RESERVED	R/W	X	
5	ded	R/W	0h	
4	sec	R/W	0h	
3	global_safe_req	R/W	0h	
2	global_main_req	R/W	0h	
1	global_safe	R/W	0h	
0	global_main	R/W	0h	

Copyright © 2025 Texas Instruments Incorporated

6.2.7.279 DAP_R232_BUS_SAFETY_ERR Register (Offset = 458h) [reset = 0h]

DAP_R232_BUS_SAFETY_ERR is shown in Figure 6-1194 and described in Table 6-1201.

Return to the Summary Table.

Figure 6-1194. DAP_R232_BUS_SAFETY_ERR Register

31	30	29	28	27	26	25	24	23	22	21	20	19	18	17	16
ded								sec							
R-0h								R-0h							
15	14	13	12	11	10	9	8	7	6	5	4	3	2	1	0
comp_check								comp_err							
R-0h								R-0h							

Table 6-1201. DAP_R232_BUS_SAFETY_ERR Register Field Descriptions

Bit	Field	Type	Reset	Description
31-24	ded	R	0h	
23-16	sec	R	0h	
15-8	comp_check	R	0h	
7-0	comp_err	R	0h	

6.2.7.280 DAP_R232_BUS_SAFETY_ERR_STAT_DATA0 Register (Offset = 45Ch) [reset = X]

DAP_R232_BUS_SAFETY_ERR_STAT_DATA0 is shown in Figure 6-1195 and described in Table 6-1202.

Return to the Summary Table.

Figure 6-1195. DAP_R232_BUS_SAFETY_ERR_STAT_DATA0 Register

31	30	29	28	27	26	25	24	23	22	21	20	19	18	17	16	15	14	13	12	11	10	9	8	7	6	5	4	3	2	1	0
RESERVED																d1								d0							
R-X																R-0h								R-0h							

Table 6-1202. DAP_R232_BUS_SAFETY_ERR_STAT_DATA0 Register Field Descriptions

Bit	Field	Type	Reset	Description
31-16	RESERVED	R	X	
15-8	d1	R	0h	
7-0	d0	R	0h	

6.2.7.281 DAP_R232_BUS_SAFETY_ERR_STAT_CMD Register (Offset = 460h) [reset = 0h]

DAP_R232_BUS_SAFETY_ERR_STAT_CMD is shown in Figure 6-1196 and described in Table 6-1203.

Return to the Summary Table.

Figure 6-1196. DAP_R232_BUS_SAFETY_ERR_STAT_CMD Register

31	30	29	28	27	26	25	24	23	22	21	20	19	18	17	16	15	14	13	12	11	10	9	8	7	6	5	4	3	2	1	0
stat																															
R-0h																															

Table 6-1203. DAP_R232_BUS_SAFETY_ERR_STAT_CMD Register Field Descriptions

Bit	Field	Type	Reset	Description
31-0	stat	R	0h	

Copyright © 2025 Texas Instruments Incorporated

6.2.7.282 DAP_R232_BUS_SAFETY_ERR_STAT_WRITE Register (Offset = 464h) [reset = 0h]

DAP_R232_BUS_SAFETY_ERR_STAT_WRITE is shown in Figure 6-1197 and described in Table 6-1204.

Return to the Summary Table.

Figure 6-1197. DAP_R232_BUS_SAFETY_ERR_STAT_WRITE Register

31	30	29	28	27	26	25	24	23	22	21	20	19	18	17	16	15	14	13	12	11	10	9	8	7	6	5	4	3	2	1	0
stat																															
R-0h																															

Table 6-1204. DAP_R232_BUS_SAFETY_ERR_STAT_WRITE Register Field Descriptions

Bit	Field	Type	Reset	Description
31-0	stat	R	0h	

6.2.7.283 DAP_R232_BUS_SAFETY_ERR_STAT_READ Register (Offset = 468h) [reset = 0h]

DAP_R232_BUS_SAFETY_ERR_STAT_READ is shown in Figure 6-1198 and described in Table 6-1205.

Return to the Summary Table.

Figure 6-1198. DAP_R232_BUS_SAFETY_ERR_STAT_READ Register

31	30	29	28	27	26	25	24	23	22	21	20	19	18	17	16	15	14	13	12	11	10	9	8	7	6	5	4	3	2	1	0
stat																															
R-0h																															

Table 6-1205. DAP_R232_BUS_SAFETY_ERR_STAT_READ Register Field Descriptions

Bit	Field	Type	Reset	Description
31-0	stat	R	0h	

6.2.7.284 DAP_R232_BUS_SAFETY_ERR_STAT_WRITERESP Register (Offset = 46Ch) [reset = 0h]

DAP_R232_BUS_SAFETY_ERR_STAT_WRITERESP is shown in Figure 6-1199 and described in Table 6-1206.

Return to the Summary Table.

Figure 6-1199. DAP_R232_BUS_SAFETY_ERR_STAT_WRITERESP Register

31	30	29	28	27	26	25	24	23	22	21	20	19	18	17	16	15	14	13	12	11	10	9	8	7	6	5	4	3	2	1	0
stat																															
R-0h																															

Table 6-1206. DAP_R232_BUS_SAFETY_ERR_STAT_WRITERESP Register Field Descriptions

Bit	Field	Type	Reset	Description
31-0	stat	R	0h	

6.2.7.285 MSS_L2_A_BUS_SAFETY_CTRL Register (Offset = 470h) [reset = X]

MSS_L2_A_BUS_SAFETY_CTRL is shown in Figure 6-1200 and described in Table 6-1207.

Return to the Summary Table.

Figure 6-1200. MSS_L2_A_BUS_SAFETY_CTRL Register

31	30	29	28	27	26	25	24
RESERVED							

Copyright © 2025 Texas Instruments Incorporated

Figure 6-1200. MSS_L2_A_BUS_SAFETY_CTRL Register (continued)

R/W-X							
23	22	21	20	19	18	17	16
type							
R-0h							
15	14	13	12	11	10	9	8
RESERVED							err_clear
R/W-X							R/W-0h
7	6	5	4	3	2	1	0
RESERVED						enable	
R/W-X						R/W-7h	

Table 6-1207. MSS_L2_A_BUS_SAFETY_CTRL Register Field Descriptions

Bit	Field	Type	Reset	Description
31-24	RESERVED	R/W	X	
23-16	type	R	0h	
15-9	RESERVED	R/W	X	
8	err_clear	R/W	0h	
7-3	RESERVED	R/W	X	
2-0	enable	R/W	7h	

6.2.7.286 MSS_L2_A_BUS_SAFETY_FI Register (Offset = 474h) [reset = X]

MSS_L2_A_BUS_SAFETY_FI is shown in Figure 6-1201 and described in Table 6-1208.

Return to the Summary Table.

Figure 6-1201. MSS_L2_A_BUS_SAFETY_FI Register

31	30	29	28	27	26	25	24
safe							
R/W-0h							
23	22	21	20	19	18	17	16
main							
R/W-0h							
15	14	13	12	11	10	9	8
data							
R/W-0h							
7	6	5	4	3	2	1	0
RESERVED		ded	sec	global_safe_req	global_main_req	global_safe	global_main
R/W-X		R/W-0h	R/W-0h	R/W-0h	R/W-0h	R/W-0h	R/W-0h

Table 6-1208. MSS_L2_A_BUS_SAFETY_FI Register Field Descriptions

Bit	Field	Type	Reset	Description
31-24	safe	R/W	0h	
23-16	main	R/W	0h	
15-8	data	R/W	0h	

Copyright © 2025 Texas Instruments Incorporated

Table 6-1208. MSS_L2_A_BUS_SAFETY_FI Register Field Descriptions (continued)

Bit	Field	Type	Reset	Description
7-6	RESERVED	R/W	X	
5	ded	R/W	0h	
4	sec	R/W	0h	
3	global_safe_req	R/W	0h	
2	global_main_req	R/W	0h	
1	global_safe	R/W	0h	
0	global_main	R/W	0h	

6.2.7.287 MSS_L2_A_BUS_SAFETY_ERR Register (Offset = 478h) [reset = 0h]

MSS_L2_A_BUS_SAFETY_ERR is shown in Figure 6-1202 and described in Table 6-1209.

Return to the Summary Table.

Figure 6-1202. MSS_L2_A_BUS_SAFETY_ERR Register

31	30	29	28	27	26	25	24	23	22	21	20	19	18	17	16
ded								sec							
R-0h								R-0h							
15	14	13	12	11	10	9	8	7	6	5	4	3	2	1	0
comp_check								comp_err							
R-0h								R-0h							

Table 6-1209. MSS_L2_A_BUS_SAFETY_ERR Register Field Descriptions

Bit	Field	Type	Reset	Description
31-24	ded	R	0h	
23-16	sec	R	0h	
15-8	comp_check	R	0h	
7-0	comp_err	R	0h	

6.2.7.288 MSS_L2_A_BUS_SAFETY_ERR_STAT_DATA0 Register (Offset = 47Ch) [reset = X]

MSS_L2_A_BUS_SAFETY_ERR_STAT_DATA0 is shown in Figure 6-1203 and described in Table 6-1210.

Return to the Summary Table.

Figure 6-1203. MSS_L2_A_BUS_SAFETY_ERR_STAT_DATA0 Register

31	30	29	28	27	26	25	24	23	22	21	20	19	18	17	16	15	14	13	12	11	10	9	8	7	6	5	4	3	2	1	0
RESERVED																d1								d0							
R-X																R-0h								R-0h							

Table 6-1210. MSS_L2_A_BUS_SAFETY_ERR_STAT_DATA0 Register Field Descriptions

Bit	Field	Type	Reset	Description
31-16	RESERVED	R	X	
15-8	d1	R	0h	
7-0	d0	R	0h	

Copyright © 2025 Texas Instruments Incorporated

6.2.7.289 MSS_L2_A_BUS_SAFETY_ERR_STAT_CMD Register (Offset = 480h) [reset = 0h]

MSS_L2_A_BUS_SAFETY_ERR_STAT_CMD is shown in Figure 6-1204 and described in Table 6-1211.

Return to the Summary Table.

Figure 6-1204. MSS_L2_A_BUS_SAFETY_ERR_STAT_CMD Register

31	30	29	28	27	26	25	24	23	22	21	20	19	18	17	16	15	14	13	12	11	10	9	8	7	6	5	4	3	2	1	0
stat																															
R-0h																															

Table 6-1211. MSS_L2_A_BUS_SAFETY_ERR_STAT_CMD Register Field Descriptions

Bit	Field	Type	Reset	Description
31-0	stat	R	0h	

6.2.7.290 MSS_L2_A_BUS_SAFETY_ERR_STAT_WRITE Register (Offset = 484h) [reset = 0h]

MSS_L2_A_BUS_SAFETY_ERR_STAT_WRITE is shown in Figure 6-1205 and described in Table 6-1212.

Return to the Summary Table.

Figure 6-1205. MSS_L2_A_BUS_SAFETY_ERR_STAT_WRITE Register

31	30	29	28	27	26	25	24	23	22	21	20	19	18	17	16	15	14	13	12	11	10	9	8	7	6	5	4	3	2	1	0
stat																															
R-0h																															

Table 6-1212. MSS_L2_A_BUS_SAFETY_ERR_STAT_WRITE Register Field Descriptions

Bit	Field	Type	Reset	Description
31-0	stat	R	0h	

6.2.7.291 MSS_L2_A_BUS_SAFETY_ERR_STAT_READ Register (Offset = 488h) [reset = 0h]

MSS_L2_A_BUS_SAFETY_ERR_STAT_READ is shown in Figure 6-1206 and described in Table 6-1213.

Return to the Summary Table.

Figure 6-1206. MSS_L2_A_BUS_SAFETY_ERR_STAT_READ Register

31	30	29	28	27	26	25	24	23	22	21	20	19	18	17	16	15	14	13	12	11	10	9	8	7	6	5	4	3	2	1	0
stat																															
R-0h																															

Table 6-1213. MSS_L2_A_BUS_SAFETY_ERR_STAT_READ Register Field Descriptions

Bit	Field	Type	Reset	Description
31-0	stat	R	0h	

6.2.7.292 MSS_L2_A_BUS_SAFETY_ERR_STAT_WRITERESP Register (Offset = 48Ch) [reset = 0h]

MSS_L2_A_BUS_SAFETY_ERR_STAT_WRITERESP is shown in Figure 6-1207 and described in Table 6-1214.

Return to the Summary Table.

Figure 6-1207. MSS_L2_A_BUS_SAFETY_ERR_STAT_WRITERESP Register

31	30	29	28	27	26	25	24	23	22	21	20	19	18	17	16	15	14	13	12	11	10	9	8	7	6	5	4	3	2	1	0

Copyright © 2025 Texas Instruments Incorporated

Figure 6-1207. MSS_L2_A_BUS_SAFETY_ERR_STAT_WRITERESP Register (continued)

stat
R-0h

Table 6-1214. MSS_L2_A_BUS_SAFETY_ERR_STAT_WRITERESP Register Field Descriptions

Bit	Field	Type	Reset	Description
31-0	stat	R	0h	

6.2.7.293 MSS_L2_B_BUS_SAFETY_CTRL Register (Offset = 490h) [reset = X]

MSS_L2_B_BUS_SAFETY_CTRL is shown in Figure 6-1208 and described in Table 6-1215.

Return to the Summary Table.

Figure 6-1208. MSS_L2_B_BUS_SAFETY_CTRL Register

31	30	29	28	27	26	25	24
RESERVED							
R/W-X							
23	22	21	20	19	18	17	16
type							
R-0h							
15	14	13	12	11	10	9	8
RESERVED							err_clear
R/W-X							R/W-0h
7	6	5	4	3	2	1	0
RESERVED						enable	
R/W-X						R/W-7h	

Table 6-1215. MSS_L2_B_BUS_SAFETY_CTRL Register Field Descriptions

Bit	Field	Type	Reset	Description
31-24	RESERVED	R/W	X	
23-16	type	R	0h	
15-9	RESERVED	R/W	X	
8	err_clear	R/W	0h	
7-3	RESERVED	R/W	X	
2-0	enable	R/W	7h	

6.2.7.294 MSS_L2_B_BUS_SAFETY_FI Register (Offset = 494h) [reset = X]

MSS_L2_B_BUS_SAFETY_FI is shown in Figure 6-1209 and described in Table 6-1216.

Return to the Summary Table.

Figure 6-1209. MSS_L2_B_BUS_SAFETY_FI Register

31	30	29	28	27	26	25	24
safe							
R/W-0h							
23	22	21	20	19	18	17	16
main							

Copyright © 2025 Texas Instruments Incorporated

Figure 6-1209. MSS_L2_B_BUS_SAFETY_FI Register (continued)

R/W-0h							
15	14	13	12	11	10	9	8
data							
R/W-0h							
7	6	5	4	3	2	1	0
RESERVED		ded	sec	global_safe_req	global_main_req	global_safe	global_main
R/W-X		R/W-0h	R/W-0h	R/W-0h	R/W-0h	R/W-0h	R/W-0h

Table 6-1216. MSS_L2_B_BUS_SAFETY_FI Register Field Descriptions

Bit	Field	Type	Reset	Description
31-24	safe	R/W	0h	
23-16	main	R/W	0h	
15-8	data	R/W	0h	
7-6	RESERVED	R/W	X	
5	ded	R/W	0h	
4	sec	R/W	0h	
3	global_safe_req	R/W	0h	
2	global_main_req	R/W	0h	
1	global_safe	R/W	0h	
0	global_main	R/W	0h	

6.2.7.295 MSS_L2_B_BUS_SAFETY_ERR Register (Offset = 498h) [reset = 0h]

MSS_L2_B_BUS_SAFETY_ERR is shown in Figure 6-1210 and described in Table 6-1217.

Return to the Summary Table.

Figure 6-1210. MSS_L2_B_BUS_SAFETY_ERR Register

31	30	29	28	27	26	25	24	23	22	21	20	19	18	17	16
ded								sec							
R-0h								R-0h							
15	14	13	12	11	10	9	8	7	6	5	4	3	2	1	0
comp_check								comp_err							
R-0h								R-0h							

Table 6-1217. MSS_L2_B_BUS_SAFETY_ERR Register Field Descriptions

Bit	Field	Type	Reset	Description
31-24	ded	R	0h	
23-16	sec	R	0h	
15-8	comp_check	R	0h	
7-0	comp_err	R	0h	

6.2.7.296 MSS_L2_B_BUS_SAFETY_ERR_STAT_DATA0 Register (Offset = 49Ch) [reset = X]

MSS_L2_B_BUS_SAFETY_ERR_STAT_DATA0 is shown in Figure 6-1211 and described in Table 6-1218.

Return to the Summary Table.

Copyright © 2025 Texas Instruments Incorporated

Figure 6-1211. MSS_L2_B_BUS_SAFETY_ERR_STAT_DATA0 Register

31	30	29	28	27	26	25	24	23	22	21	20	19	18	17	16	15	14	13	12	11	10	9	8	7	6	5	4	3	2	1	0
RESERVED																d1								d0							
R-X																R-0h								R-0h							

Table 6-1218. MSS_L2_B_BUS_SAFETY_ERR_STAT_DATA0 Register Field Descriptions

Bit	Field	Type	Reset	Description
31-16	RESERVED	R	X	
15-8	d1	R	0h	
7-0	d0	R	0h	

6.2.7.297 MSS_L2_B_BUS_SAFETY_ERR_STAT_CMD Register (Offset = 4A0h) [reset = 0h]

MSS_L2_B_BUS_SAFETY_ERR_STAT_CMD is shown in Figure 6-1212 and described in Table 6-1219.

Return to the Summary Table.

Figure 6-1212. MSS_L2_B_BUS_SAFETY_ERR_STAT_CMD Register

31	30	29	28	27	26	25	24	23	22	21	20	19	18	17	16	15	14	13	12	11	10	9	8	7	6	5	4	3	2	1	0
stat																															
R-0h																															

Table 6-1219. MSS_L2_B_BUS_SAFETY_ERR_STAT_CMD Register Field Descriptions

Bit	Field	Type	Reset	Description
31-0	stat	R	0h	

6.2.7.298 MSS_L2_B_BUS_SAFETY_ERR_STAT_WRITE Register (Offset = 4A4h) [reset = 0h]

MSS_L2_B_BUS_SAFETY_ERR_STAT_WRITE is shown in Figure 6-1213 and described in Table 6-1220.

Return to the Summary Table.

Figure 6-1213. MSS_L2_B_BUS_SAFETY_ERR_STAT_WRITE Register

31	30	29	28	27	26	25	24	23	22	21	20	19	18	17	16	15	14	13	12	11	10	9	8	7	6	5	4	3	2	1	0
stat																															
R-0h																															

Table 6-1220. MSS_L2_B_BUS_SAFETY_ERR_STAT_WRITE Register Field Descriptions

Bit	Field	Type	Reset	Description
31-0	stat	R	0h	

6.2.7.299 MSS_L2_B_BUS_SAFETY_ERR_STAT_READ Register (Offset = 4A8h) [reset = 0h]

MSS_L2_B_BUS_SAFETY_ERR_STAT_READ is shown in Figure 6-1214 and described in Table 6-1221.

Return to the Summary Table.

Figure 6-1214. MSS_L2_B_BUS_SAFETY_ERR_STAT_READ Register

31	30	29	28	27	26	25	24	23	22	21	20	19	18	17	16	15	14	13	12	11	10	9	8	7	6	5	4	3	2	1	0
stat																															
R-0h																															

Copyright © 2025 Texas Instruments Incorporated

Table 6-1221. MSS_L2_B_BUS_SAFETY_ERR_STAT_READ Register Field Descriptions

Bit	Field	Type	Reset	Description
31-0	stat	R	0h	

6.2.7.300 MSS_L2_B_BUS_SAFETY_ERR_STAT_WRITERESP Register (Offset = 4ACh) [reset = 0h]

MSS_L2_B_BUS_SAFETY_ERR_STAT_WRITERESP is shown in Figure 6-1215 and described in Table 6-1222.

Return to the Summary Table.

Figure 6-1215. MSS_L2_B_BUS_SAFETY_ERR_STAT_WRITERESP Register

31	30	29	28	27	26	25	24	23	22	21	20	19	18	17	16	15	14	13	12	11	10	9	8	7	6	5	4	3	2	1	0
stat																															
R-0h																															

Table 6-1222. MSS_L2_B_BUS_SAFETY_ERR_STAT_WRITERESP Register Field Descriptions

Bit	Field	Type	Reset	Description
31-0	stat	R	0h	

6.2.7.301 MSS_MBOX_BUS_SAFETY_CTRL Register (Offset = 4B0h) [reset = X]

MSS_MBOX_BUS_SAFETY_CTRL is shown in Figure 6-1216 and described in Table 6-1223.

Return to the Summary Table.

Figure 6-1216. MSS_MBOX_BUS_SAFETY_CTRL Register

31	30	29	28	27	26	25	24
RESERVED							
R/W-X							
23	22	21	20	19	18	17	16
type							
R-0h							
15	14	13	12	11	10	9	8
RESERVED							err_clear
R/W-X							R/W-0h
7	6	5	4	3	2	1	0
RESERVED						enable	
R/W-X						R/W-7h	

Table 6-1223. MSS_MBOX_BUS_SAFETY_CTRL Register Field Descriptions

Bit	Field	Type	Reset	Description
31-24	RESERVED	R/W	X	
23-16	type	R	0h	
15-9	RESERVED	R/W	X	
8	err_clear	R/W	0h	
7-3	RESERVED	R/W	X	
2-0	enable	R/W	7h	

Copyright © 2025 Texas Instruments Incorporated

6.2.7.302 MSS_MBOX_BUS_SAFETY_FI Register (Offset = 4B4h) [reset = X]

MSS_MBOX_BUS_SAFETY_FI is shown in Figure 6-1217 and described in Table 6-1224.

Return to the Summary Table.

Figure 6-1217. MSS_MBOX_BUS_SAFETY_FI Register

31	30	29	28	27	26	25	24
safe							
R/W-0h							
23	22	21	20	19	18	17	16
main							
R/W-0h							
15	14	13	12	11	10	9	8
data							
R/W-0h							
7	6	5	4	3	2	1	0
RESERVED		ded	sec	global_safe_req	global_main_req	global_safe	global_main
R/W-X		R/W-0h	R/W-0h	R/W-0h	R/W-0h	R/W-0h	R/W-0h

Table 6-1224. MSS_MBOX_BUS_SAFETY_FI Register Field Descriptions

Bit	Field	Type	Reset	Description
31-24	safe	R/W	0h	
23-16	main	R/W	0h	
15-8	data	R/W	0h	
7-6	RESERVED	R/W	X	
5	ded	R/W	0h	
4	sec	R/W	0h	
3	global_safe_req	R/W	0h	
2	global_main_req	R/W	0h	
1	global_safe	R/W	0h	
0	global_main	R/W	0h	

6.2.7.303 MSS_MBOX_BUS_SAFETY_ERR Register (Offset = 4B8h) [reset = 0h]

MSS_MBOX_BUS_SAFETY_ERR is shown in Figure 6-1218 and described in Table 6-1225.

Return to the Summary Table.

Figure 6-1218. MSS_MBOX_BUS_SAFETY_ERR Register

31	30	29	28	27	26	25	24	23	22	21	20	19	18	17	16
ded								sec							
R-0h								R-0h							
15	14	13	12	11	10	9	8	7	6	5	4	3	2	1	0
comp_check								comp_err							
R-0h								R-0h							

Copyright © 2025 Texas Instruments Incorporated

Table 6-1225. MSS_MBOX_BUS_SAFETY_ERR Register Field Descriptions

Bit	Field	Type	Reset	Description
31-24	ded	R	0h	
23-16	sec	R	0h	
15-8	comp_check	R	0h	
7-0	comp_err	R	0h	

6.2.7.304 MSS_MBOX_BUS_SAFETY_ERR_STAT_DATA0 Register (Offset = 4BCh) [reset = X]

MSS_MBOX_BUS_SAFETY_ERR_STAT_DATA0 is shown in Figure 6-1219 and described in Table 6-1226.

Return to the Summary Table.

Figure 6-1219. MSS_MBOX_BUS_SAFETY_ERR_STAT_DATA0 Register

31	30	29	28	27	26	25	24	23	22	21	20	19	18	17	16	15	14	13	12	11	10	9	8	7	6	5	4	3	2	1	0
RESERVED																d1								d0							
R-X																R-0h								R-0h							

Table 6-1226. MSS_MBOX_BUS_SAFETY_ERR_STAT_DATA0 Register Field Descriptions

Bit	Field	Type	Reset	Description
31-16	RESERVED	R	X	
15-8	d1	R	0h	
7-0	d0	R	0h	

6.2.7.305 MSS_MBOX_BUS_SAFETY_ERR_STAT_CMD Register (Offset = 4C0h) [reset = 0h]

MSS_MBOX_BUS_SAFETY_ERR_STAT_CMD is shown in Figure 6-1220 and described in Table 6-1227.

Return to the Summary Table.

Figure 6-1220. MSS_MBOX_BUS_SAFETY_ERR_STAT_CMD Register

31	30	29	28	27	26	25	24	23	22	21	20	19	18	17	16	15	14	13	12	11	10	9	8	7	6	5	4	3	2	1	0
stat																															
R-0h																															

Table 6-1227. MSS_MBOX_BUS_SAFETY_ERR_STAT_CMD Register Field Descriptions

Bit	Field	Type	Reset	Description
31-0	stat	R	0h	

6.2.7.306 MSS_MBOX_BUS_SAFETY_ERR_STAT_WRITE Register (Offset = 4C4h) [reset = 0h]

MSS_MBOX_BUS_SAFETY_ERR_STAT_WRITE is shown in Figure 6-1221 and described in Table 6-1228.

Return to the Summary Table.

Figure 6-1221. MSS_MBOX_BUS_SAFETY_ERR_STAT_WRITE Register

31	30	29	28	27	26	25	24	23	22	21	20	19	18	17	16	15	14	13	12	11	10	9	8	7	6	5	4	3	2	1	0
stat																															
R-0h																															

Copyright © 2025 Texas Instruments Incorporated

Table 6-1228. MSS_MBOX_BUS_SAFETY_ERR_STAT_WRITE Register Field Descriptions

Bit	Field	Type	Reset	Description
31-0	stat	R	0h	

6.2.7.307 MSS_MBOX_BUS_SAFETY_ERR_STAT_READ Register (Offset = 4C8h) [reset = 0h]

MSS_MBOX_BUS_SAFETY_ERR_STAT_READ is shown in Figure 6-1222 and described in Table 6-1229.

Return to the Summary Table.

Figure 6-1222. MSS_MBOX_BUS_SAFETY_ERR_STAT_READ Register

31	30	29	28	27	26	25	24	23	22	21	20	19	18	17	16	15	14	13	12	11	10	9	8	7	6	5	4	3	2	1	0
stat																															
R-0h																															

Table 6-1229. MSS_MBOX_BUS_SAFETY_ERR_STAT_READ Register Field Descriptions

Bit	Field	Type	Reset	Description
31-0	stat	R	0h	

6.2.7.308 MSS_MBOX_BUS_SAFETY_ERR_STAT_WRITERESP Register (Offset = 4CCh) [reset = 0h]

MSS_MBOX_BUS_SAFETY_ERR_STAT_WRITERESP is shown in Figure 6-1223 and described in Table 6-1230.

Return to the Summary Table.

Figure 6-1223. MSS_MBOX_BUS_SAFETY_ERR_STAT_WRITERESP Register

31	30	29	28	27	26	25	24	23	22	21	20	19	18	17	16	15	14	13	12	11	10	9	8	7	6	5	4	3	2	1	0
stat																															
R-0h																															

Table 6-1230. MSS_MBOX_BUS_SAFETY_ERR_STAT_WRITERESP Register Field Descriptions

Bit	Field	Type	Reset	Description
31-0	stat	R	0h	

6.2.7.309 MSS_SWBUF_BUS_SAFETY_CTRL Register (Offset = 4D0h) [reset = X]

MSS_SWBUF_BUS_SAFETY_CTRL is shown in Figure 6-1224 and described in Table 6-1231.

Return to the Summary Table.

Figure 6-1224. MSS_SWBUF_BUS_SAFETY_CTRL Register

31	30	29	28	27	26	25	24
RESERVED							
R/W-X							
23	22	21	20	19	18	17	16
type							
R-0h							
15	14	13	12	11	10	9	8
RESERVED							err_clear
R/W-X							R/W-0h

Copyright © 2025 Texas Instruments Incorporated

Figure 6-1224. MSS_SWBUF_BUS_SAFETY_CTRL Register (continued)

7	6	5	4	3	2	1	0
RESERVED						enable	
R/W-X						R/W-7h	

Table 6-1231. MSS_SWBUF_BUS_SAFETY_CTRL Register Field Descriptions

Bit	Field	Type	Reset	Description
31-24	RESERVED	R/W	X	
23-16	type	R	0h	
15-9	RESERVED	R/W	X	
8	err_clear	R/W	0h	
7-3	RESERVED	R/W	X	
2-0	enable	R/W	7h	

6.2.7.310 MSS_SWBUF_BUS_SAFETY_FI Register (Offset = 4D4h) [reset = X]

MSS_SWBUF_BUS_SAFETY_FI is shown in Figure 6-1225 and described in Table 6-1232.

Return to the Summary Table.

Figure 6-1225. MSS_SWBUF_BUS_SAFETY_FI Register

31	30	29	28	27	26	25	24
safe							
R/W-0h							
23	22	21	20	19	18	17	16
main							
R/W-0h							
15	14	13	12	11	10	9	8
data							
R/W-0h							
7	6	5	4	3	2	1	0
RESERVED		ded	sec	global_safe_req	global_main_req	global_safe	global_main
R/W-X		R/W-0h	R/W-0h	R/W-0h	R/W-0h	R/W-0h	R/W-0h

Table 6-1232. MSS_SWBUF_BUS_SAFETY_FI Register Field Descriptions

Bit	Field	Type	Reset	Description
31-24	safe	R/W	0h	
23-16	main	R/W	0h	
15-8	data	R/W	0h	
7-6	RESERVED	R/W	X	
5	ded	R/W	0h	
4	sec	R/W	0h	
3	global_safe_req	R/W	0h	
2	global_main_req	R/W	0h	
1	global_safe	R/W	0h	
0	global_main	R/W	0h	

Copyright © 2025 Texas Instruments Incorporated

6.2.7.311 MSS_SWBUF_BUS_SAFETY_ERR Register (Offset = 4D8h) [reset = 0h]

MSS_SWBUF_BUS_SAFETY_ERR is shown in Figure 6-1226 and described in Table 6-1233.

Return to the Summary Table.

Figure 6-1226. MSS_SWBUF_BUS_SAFETY_ERR Register

31	30	29	28	27	26	25	24	23	22	21	20	19	18	17	16
ded								sec							
R-0h								R-0h							
15	14	13	12	11	10	9	8	7	6	5	4	3	2	1	0
comp_check								comp_err							
R-0h								R-0h							

Table 6-1233. MSS_SWBUF_BUS_SAFETY_ERR Register Field Descriptions

Bit	Field	Type	Reset	Description
31-24	ded	R	0h	
23-16	sec	R	0h	
15-8	comp_check	R	0h	
7-0	comp_err	R	0h	

6.2.7.312 MSS_SWBUF_BUS_SAFETY_ERR_STAT_DATA0 Register (Offset = 4DCh) [reset = X]

MSS_SWBUF_BUS_SAFETY_ERR_STAT_DATA0 is shown in Figure 6-1227 and described in Table 6-1234.

Return to the Summary Table.

Figure 6-1227. MSS_SWBUF_BUS_SAFETY_ERR_STAT_DATA0 Register

31	30	29	28	27	26	25	24	23	22	21	20	19	18	17	16	15	14	13	12	11	10	9	8	7	6	5	4	3	2	1	0
RESERVED																d1								d0							
R-X																R-0h								R-0h							

Table 6-1234. MSS_SWBUF_BUS_SAFETY_ERR_STAT_DATA0 Register Field Descriptions

Bit	Field	Type	Reset	Description
31-16	RESERVED	R	X	
15-8	d1	R	0h	
7-0	d0	R	0h	

6.2.7.313 MSS_SWBUF_BUS_SAFETY_ERR_STAT_CMD Register (Offset = 4E0h) [reset = 0h]

MSS_SWBUF_BUS_SAFETY_ERR_STAT_CMD is shown in Figure 6-1228 and described in Table 6-1235.

Return to the Summary Table.

Figure 6-1228. MSS_SWBUF_BUS_SAFETY_ERR_STAT_CMD Register

31	30	29	28	27	26	25	24	23	22	21	20	19	18	17	16	15	14	13	12	11	10	9	8	7	6	5	4	3	2	1	0
stat																															
R-0h																															

Table 6-1235. MSS_SWBUF_BUS_SAFETY_ERR_STAT_CMD Register Field Descriptions

Bit	Field	Type	Reset	Description
31-0	stat	R	0h	

Copyright © 2025 Texas Instruments Incorporated

6.2.7.314 MSS_SWBUF_BUS_SAFETY_ERR_STAT_WRITE Register (Offset = 4E4h) [reset = 0h]

MSS_SWBUF_BUS_SAFETY_ERR_STAT_WRITE is shown in Figure 6-1229 and described in Table 6-1236.

Return to the Summary Table.

Figure 6-1229. MSS_SWBUF_BUS_SAFETY_ERR_STAT_WRITE Register

31	30	29	28	27	26	25	24	23	22	21	20	19	18	17	16	15	14	13	12	11	10	9	8	7	6	5	4	3	2	1	0
stat																															
R-0h																															

Table 6-1236. MSS_SWBUF_BUS_SAFETY_ERR_STAT_WRITE Register Field Descriptions

Bit	Field	Type	Reset	Description
31-0	stat	R	0h	

6.2.7.315 MSS_SWBUF_BUS_SAFETY_ERR_STAT_READ Register (Offset = 4E8h) [reset = 0h]

MSS_SWBUF_BUS_SAFETY_ERR_STAT_READ is shown in Figure 6-1230 and described in Table 6-1237.

Return to the Summary Table.

Figure 6-1230. MSS_SWBUF_BUS_SAFETY_ERR_STAT_READ Register

31	30	29	28	27	26	25	24	23	22	21	20	19	18	17	16	15	14	13	12	11	10	9	8	7	6	5	4	3	2	1	0
stat																															
R-0h																															

Table 6-1237. MSS_SWBUF_BUS_SAFETY_ERR_STAT_READ Register Field Descriptions

Bit	Field	Type	Reset	Description
31-0	stat	R	0h	

6.2.7.316 MSS_SWBUF_BUS_SAFETY_ERR_STAT_WRITERESP Register (Offset = 4ECh) [reset = 0h]

MSS_SWBUF_BUS_SAFETY_ERR_STAT_WRITERESP is shown in Figure 6-1231 and described in Table 6-1238.

Return to the Summary Table.

Figure 6-1231. MSS_SWBUF_BUS_SAFETY_ERR_STAT_WRITERESP Register

31	30	29	28	27	26	25	24	23	22	21	20	19	18	17	16	15	14	13	12	11	10	9	8	7	6	5	4	3	2	1	0
stat																															
R-0h																															

Table 6-1238. MSS_SWBUF_BUS_SAFETY_ERR_STAT_WRITERESP Register Field Descriptions

Bit	Field	Type	Reset	Description
31-0	stat	R	0h	

6.2.7.317 MSS_GPADC_BUS_SAFETY_CTRL Register (Offset = 4F0h) [reset = X]

MSS_GPADC_BUS_SAFETY_CTRL is shown in Figure 6-1232 and described in Table 6-1239.

Return to the Summary Table.

Figure 6-1232. MSS_GPADC_BUS_SAFETY_CTRL Register

31	30	29	28	27	26	25	24

Copyright © 2025 Texas Instruments Incorporated

Figure 6-1232. MSS_GPADC_BUS_SAFETY_CTRL Register (continued)

RESERVED							
R/W-X							
23	22	21	20	19	18	17	16
type							
R-0h							
15	14	13	12	11	10	9	8
RESERVED							err_clear
R/W-X							R/W-0h
7	6	5	4	3	2	1	0
RESERVED						enable	
R/W-X						R/W-7h	

Table 6-1239. MSS_GPADC_BUS_SAFETY_CTRL Register Field Descriptions

Bit	Field	Type	Reset	Description
31-24	RESERVED	R/W	X	
23-16	type	R	0h	
15-9	RESERVED	R/W	X	
8	err_clear	R/W	0h	
7-3	RESERVED	R/W	X	
2-0	enable	R/W	7h	

6.2.7.318 MSS_GPADC_BUS_SAFETY_FI Register (Offset = 4F4h) [reset = X]

MSS_GPADC_BUS_SAFETY_FI is shown in Figure 6-1233 and described in Table 6-1240.

Return to the Summary Table.

Figure 6-1233. MSS_GPADC_BUS_SAFETY_FI Register

31	30	29	28	27	26	25	24
safe							
R/W-0h							
23	22	21	20	19	18	17	16
main							
R/W-0h							
15	14	13	12	11	10	9	8
data							
R/W-0h							
7	6	5	4	3	2	1	0
RESERVED		ded	sec	global_safe_req	global_main_req	global_safe	global_main
R/W-X		R/W-0h	R/W-0h	R/W-0h	R/W-0h	R/W-0h	R/W-0h

Table 6-1240. MSS_GPADC_BUS_SAFETY_FI Register Field Descriptions

Bit	Field	Type	Reset	Description
31-24	safe	R/W	0h	
23-16	main	R/W	0h	

Copyright © 2025 Texas Instruments Incorporated

Table 6-1240. MSS_GPADC_BUS_SAFETY_FI Register Field Descriptions (continued)

Bit	Field	Type	Reset	Description
15-8	data	R/W	0h	
7-6	RESERVED	R/W	X	
5	ded	R/W	0h	
4	sec	R/W	0h	
3	global_safe_req	R/W	0h	
2	global_main_req	R/W	0h	
1	global_safe	R/W	0h	
0	global_main	R/W	0h	

6.2.7.319 MSS_GPADC_BUS_SAFETY_ERR Register (Offset = 4F8h) [reset = 0h]

MSS_GPADC_BUS_SAFETY_ERR is shown in Figure 6-1234 and described in Table 6-1241.

Return to the Summary Table.

Figure 6-1234. MSS_GPADC_BUS_SAFETY_ERR Register

31	30	29	28	27	26	25	24	23	22	21	20	19	18	17	16
ded								sec							
R-0h								R-0h							
15	14	13	12	11	10	9	8	7	6	5	4	3	2	1	0
comp_check								comp_err							
R-0h								R-0h							

Table 6-1241. MSS_GPADC_BUS_SAFETY_ERR Register Field Descriptions

Bit	Field	Type	Reset	Description
31-24	ded	R	0h	
23-16	sec	R	0h	
15-8	comp_check	R	0h	
7-0	comp_err	R	0h	

6.2.7.320 MSS_GPADC_BUS_SAFETY_ERR_STAT_DATA0 Register (Offset = 4FCh) [reset = X]

MSS_GPADC_BUS_SAFETY_ERR_STAT_DATA0 is shown in Figure 6-1235 and described in Table 6-1242.

Return to the Summary Table.

Figure 6-1235. MSS_GPADC_BUS_SAFETY_ERR_STAT_DATA0 Register

31	30	29	28	27	26	25	24	23	22	21	20	19	18	17	16	15	14	13	12	11	10	9	8	7	6	5	4	3	2	1	0
RESERVED																d1								d0							
R-X																R-0h								R-0h							

Table 6-1242. MSS_GPADC_BUS_SAFETY_ERR_STAT_DATA0 Register Field Descriptions

Bit	Field	Type	Reset	Description
31-16	RESERVED	R	X	
15-8	d1	R	0h	
7-0	d0	R	0h	

Copyright © 2025 Texas Instruments Incorporated

6.2.7.321 MSS_GPADC_BUS_SAFETY_ERR_STAT_CMD Register (Offset = 500h) [reset = 0h]

MSS_GPADC_BUS_SAFETY_ERR_STAT_CMD is shown in Figure 6-1236 and described in Table 6-1243.

Return to the Summary Table.

Figure 6-1236. MSS_GPADC_BUS_SAFETY_ERR_STAT_CMD Register

31	30	29	28	27	26	25	24	23	22	21	20	19	18	17	16	15	14	13	12	11	10	9	8	7	6	5	4	3	2	1	0
stat																															
R-0h																															

Table 6-1243. MSS_GPADC_BUS_SAFETY_ERR_STAT_CMD Register Field Descriptions

Bit	Field	Type	Reset	Description
31-0	stat	R	0h	

6.2.7.322 MSS_GPADC_BUS_SAFETY_ERR_STAT_WRITE Register (Offset = 504h) [reset = 0h]

MSS_GPADC_BUS_SAFETY_ERR_STAT_WRITE is shown in Figure 6-1237 and described in Table 6-1244.

Return to the Summary Table.

Figure 6-1237. MSS_GPADC_BUS_SAFETY_ERR_STAT_WRITE Register

31	30	29	28	27	26	25	24	23	22	21	20	19	18	17	16	15	14	13	12	11	10	9	8	7	6	5	4	3	2	1	0
stat																															
R-0h																															

Table 6-1244. MSS_GPADC_BUS_SAFETY_ERR_STAT_WRITE Register Field Descriptions

Bit	Field	Type	Reset	Description
31-0	stat	R	0h	

6.2.7.323 MSS_GPADC_BUS_SAFETY_ERR_STAT_READ Register (Offset = 508h) [reset = 0h]

MSS_GPADC_BUS_SAFETY_ERR_STAT_READ is shown in Figure 6-1238 and described in Table 6-1245.

Return to the Summary Table.

Figure 6-1238. MSS_GPADC_BUS_SAFETY_ERR_STAT_READ Register

31	30	29	28	27	26	25	24	23	22	21	20	19	18	17	16	15	14	13	12	11	10	9	8	7	6	5	4	3	2	1	0
stat																															
R-0h																															

Table 6-1245. MSS_GPADC_BUS_SAFETY_ERR_STAT_READ Register Field Descriptions

Bit	Field	Type	Reset	Description
31-0	stat	R	0h	

6.2.7.324 MSS_GPADC_BUS_SAFETY_ERR_STAT_WRITERESP Register (Offset = 50Ch) [reset = 0h]

MSS_GPADC_BUS_SAFETY_ERR_STAT_WRITERESP is shown in Figure 6-1239 and described in Table 6-1246.

Return to the Summary Table.

Figure 6-1239. MSS_GPADC_BUS_SAFETY_ERR_STAT_WRITERESP Register

31	30	29	28	27	26	25	24	23	22	21	20	19	18	17	16	15	14	13	12	11	10	9	8	7	6	5	4	3	2	1	0

Copyright © 2025 Texas Instruments Incorporated

Figure 6-1239. MSS_GPADC_BUS_SAFETY_ERR_STAT_WRITERESP Register (continued)

stat
R-0h

Table 6-1246. MSS_GPADC_BUS_SAFETY_ERR_STAT_WRITERESP Register Field Descriptions

Bit	Field	Type	Reset	Description
31-0	stat	R	0h	

6.2.7.325 MSS_BUS_SAFETY_SEC_ERR_STAT0 Register (Offset = 510h) [reset = 0h]

MSS_BUS_SAFETY_SEC_ERR_STAT0 is shown in Figure 6-1240 and described in Table 6-1247.

Return to the Summary Table.

Figure 6-1240. MSS_BUS_SAFETY_SEC_ERR_STAT0 Register

31	30	29	28	27	26	25	24
mss_dmmslv	mss_dmm	gpadc	mss_swbuf	mss_mbox	l2ram1	l2ram0	dthe
R-0h	R-0h	R-0h	R-0h	R-0h	R-0h	R-0h	R-0h
23	22	21	20	19	18	17	16
hsm_s	per_pcr2	per_pcr	mcrc	qspi	hsm_tptc_A1_wr	hsm_tptc_A1_rd	hsm_tptc_A0_wr
R-0h	R-0h	R-0h	R-0h	R-0h	R-0h	R-0h	R-0h
15	14	13	12	11	10	9	8
hsm_tptc_A0_rd	mss_tptc_B1_wr	mss_tptc_A1_wr	mss_tptc_A0_wr	mss_tptc_B1_rd	mss_tptc_A1_rd	mss_tptc_A0_rd	cpsw
R-0h	R-0h	R-0h	R-0h	R-0h	R-0h	R-0h	R-0h
7	6	5	4	3	2	1	0
hsm	dap_rs232	cr5b_slv	cr5a_slv	cr5b_wr	cr5a_wr	cr5b_rd	cr5a_rd
R-0h	R-0h	R-0h	R-0h	R-0h	R-0h	R-0h	R-0h

Table 6-1247. MSS_BUS_SAFETY_SEC_ERR_STAT0 Register Field Descriptions

Bit	Field	Type	Reset	Description
31	mss_dmmslv	R	0h	Bus safety single-bit-error of Node mentioned in the field
30	mss_dmm	R	0h	Bus safety single-bit-error of Node mentioned in the field
29	gpadc	R	0h	Bus safety single-bit-error of Node mentioned in the field
28	mss_swbuf	R	0h	Bus safety single-bit-error of Node mentioned in the field
27	mss_mbox	R	0h	Bus safety single-bit-error of Node mentioned in the field
26	l2ram1	R	0h	Bus safety single-bit-error of Node mentioned in the field
25	l2ram0	R	0h	Bus safety single-bit-error of Node mentioned in the field
24	dthe	R	0h	Bus safety single-bit-error of Node mentioned in the field
23	hsm_s	R	0h	Bus safety single-bit-error of Node mentioned in the field
22	per_pcr2	R	0h	Bus safety single-bit-error of Node mentioned in the field
21	per_pcr	R	0h	Bus safety single-bit-error of Node mentioned in the field
20	mcrc	R	0h	Bus safety single-bit-error of Node mentioned in the field
19	qspi	R	0h	Bus safety single-bit-error of Node mentioned in the field
18	hsm_tptc_A1_wr	R	0h	Bus safety single-bit-error of Node mentioned in the field
17	hsm_tptc_A1_rd	R	0h	Bus safety single-bit-error of Node mentioned in the field
16	hsm_tptc_A0_wr	R	0h	Bus safety single-bit-error of Node mentioned in the field
15	hsm_tptc_A0_rd	R	0h	Bus safety single-bit-error of Node mentioned in the field

Copyright © 2025 Texas Instruments Incorporated

Table 6-1247. MSS_BUS_SAFETY_SEC_ERR_STAT0 Register Field Descriptions (continued)

Bit	Field	Type	Reset	Description
14	mss_tptc_B1_wr	R	0h	Bus safety single-bit-error of Node mentioned in the field
13	mss_tptc_A1_wr	R	0h	Bus safety single-bit-error of Node mentioned in the field
12	mss_tptc_A0_wr	R	0h	Bus safety single-bit-error of Node mentioned in the field
11	mss_tptc_B1_rd	R	0h	Bus safety single-bit-error of Node mentioned in the field
10	mss_tptc_A1_rd	R	0h	Bus safety single-bit-error of Node mentioned in the field
9	mss_tptc_A0_rd	R	0h	Bus safety single-bit-error of Node mentioned in the field
8	cpsw	R	0h	Bus safety single-bit-error of Node mentioned in the field
7	hsm	R	0h	Bus safety single-bit-error of Node mentioned in the field
6	dap_rs232	R	0h	Bus safety single-bit-error of Node mentioned in the field
5	cr5b_slv	R	0h	Bus safety single-bit-error of Node mentioned in the field
4	cr5a_slv	R	0h	Bus safety single-bit-error of Node mentioned in the field
3	cr5b_wr	R	0h	Bus safety single-bit-error of Node mentioned in the field
2	cr5a_wr	R	0h	Bus safety single-bit-error of Node mentioned in the field
1	cr5b_rd	R	0h	Bus safety single-bit-error of Node mentioned in the field
0	cr5a_rd	R	0h	Bus safety single-bit-error of Node mentioned in the field

6.2.7.326 MSS_BUS_SAFETY_SEC_ERR_STAT1 Register (Offset = 514h) [reset = X]

MSS_BUS_SAFETY_SEC_ERR_STAT1 is shown in Figure 6-1241 and described in Table 6-1248.

Return to the Summary Table.

Figure 6-1241. MSS_BUS_SAFETY_SEC_ERR_STAT1 Register

31	30	29	28	27	26	25	24
RESERVED							mss_to_mdo
R-X							R-0h
23	22	21	20	19	18	17	16
RESERVED							
R-X							
15	14	13	12	11	10	9	8
RESERVED							
R-X							
7	6	5	4	3	2	1	0
RESERVED							
R-X							

Table 6-1248. MSS_BUS_SAFETY_SEC_ERR_STAT1 Register Field Descriptions

Bit	Field	Type	Reset	Description
31-25	RESERVED	R	X	
24	mss_to_mdo	R	0h	Bus safety single-bit-error of Node mentioned in the field
23-0	RESERVED	R	X	

6.2.7.327 MSS_DMM_BUS_SAFETY_CTRL Register (Offset = 538h) [reset = X]

MSS_DMM_BUS_SAFETY_CTRL is shown in Figure 6-1242 and described in Table 6-1249.

Copyright © 2025 Texas Instruments Incorporated

Return to the Summary Table.

Figure 6-1242. MSS_DMM_BUS_SAFETY_CTRL Register

31	30	29	28	27	26	25	24
RESERVED							
R/W-X							
23	22	21	20	19	18	17	16
type							
R-0h							
15	14	13	12	11	10	9	8
RESERVED							err_clear
R/W-X							R/W-0h
7	6	5	4	3	2	1	0
RESERVED						enable	
R/W-X						R/W-7h	

Table 6-1249. MSS_DMM_BUS_SAFETY_CTRL Register Field Descriptions

Bit	Field	Type	Reset	Description
31-24	RESERVED	R/W	X	
23-16	type	R	0h	
15-9	RESERVED	R/W	X	
8	err_clear	R/W	0h	
7-3	RESERVED	R/W	X	
2-0	enable	R/W	7h	

6.2.7.328 MSS_DMM_BUS_SAFETY_FI Register (Offset = 53Ch) [reset = X]

MSS_DMM_BUS_SAFETY_FI is shown in Figure 6-1243 and described in Table 6-1250.

Return to the Summary Table.

Figure 6-1243. MSS_DMM_BUS_SAFETY_FI Register

31	30	29	28	27	26	25	24
safe							
R/W-0h							
23	22	21	20	19	18	17	16
main							
R/W-0h							
15	14	13	12	11	10	9	8
data							
R/W-0h							
7	6	5	4	3	2	1	0
RESERVED		ded	sec	global_safe_req	global_main_req	global_safe	global_main
R/W-X		R/W-0h	R/W-0h	R/W-0h	R/W-0h	R/W-0h	R/W-0h

Copyright © 2025 Texas Instruments Incorporated

Table 6-1250. MSS_DMM_BUS_SAFETY_FI Register Field Descriptions

Bit	Field	Type	Reset	Description
31-24	safe	R/W	0h	
23-16	main	R/W	0h	
15-8	data	R/W	0h	
7-6	RESERVED	R/W	X	
5	ded	R/W	0h	
4	sec	R/W	0h	
3	global_safe_req	R/W	0h	
2	global_main_req	R/W	0h	
1	global_safe	R/W	0h	
0	global_main	R/W	0h	

6.2.7.329 MSS_DMM_BUS_SAFETY_ERR Register (Offset = 540h) [reset = 0h]

MSS_DMM_BUS_SAFETY_ERR is shown in Figure 6-1244 and described in Table 6-1251.

Return to the Summary Table.

Figure 6-1244. MSS_DMM_BUS_SAFETY_ERR Register

31	30	29	28	27	26	25	24	23	22	21	20	19	18	17	16
ded								sec							
R-0h								R-0h							
15	14	13	12	11	10	9	8	7	6	5	4	3	2	1	0
comp_check								comp_err							
R-0h								R-0h							

Table 6-1251. MSS_DMM_BUS_SAFETY_ERR Register Field Descriptions

Bit	Field	Type	Reset	Description
31-24	ded	R	0h	
23-16	sec	R	0h	
15-8	comp_check	R	0h	
7-0	comp_err	R	0h	

6.2.7.330 MSS_DMM_BUS_SAFETY_ERR_STAT_DATA0 Register (Offset = 544h) [reset = X]

MSS_DMM_BUS_SAFETY_ERR_STAT_DATA0 is shown in Figure 6-1245 and described in Table 6-1252.

Return to the Summary Table.

Figure 6-1245. MSS_DMM_BUS_SAFETY_ERR_STAT_DATA0 Register

31	30	29	28	27	26	25	24	23	22	21	20	19	18	17	16	15	14	13	12	11	10	9	8	7	6	5	4	3	2	1	0
RESERVED																d1								d0							
R-X																R-0h								R-0h							

Table 6-1252. MSS_DMM_BUS_SAFETY_ERR_STAT_DATA0 Register Field Descriptions

Bit	Field	Type	Reset	Description
31-16	RESERVED	R	X	
15-8	d1	R	0h	

Copyright © 2025 Texas Instruments Incorporated

Table 6-1252. MSS_DMM_BUS_SAFETY_ERR_STAT_DATA0 Register Field Descriptions (continued)

Bit	Field	Type	Reset	Description
7-0	d0	R	0h	

6.2.7.331 MSS_DMM_BUS_SAFETY_ERR_STAT_CMD Register (Offset = 548h) [reset = 0h]

MSS_DMM_BUS_SAFETY_ERR_STAT_CMD is shown in Figure 6-1246 and described in Table 6-1253.

Return to the Summary Table.

Figure 6-1246. MSS_DMM_BUS_SAFETY_ERR_STAT_CMD Register

31	30	29	28	27	26	25	24	23	22	21	20	19	18	17	16	15	14	13	12	11	10	9	8	7	6	5	4	3	2	1	0
stat																															
R-0h																															

Table 6-1253. MSS_DMM_BUS_SAFETY_ERR_STAT_CMD Register Field Descriptions

Bit	Field	Type	Reset	Description
31-0	stat	R	0h	

6.2.7.332 MSS_DMM_BUS_SAFETY_ERR_STAT_WRITE Register (Offset = 54Ch) [reset = 0h]

MSS_DMM_BUS_SAFETY_ERR_STAT_WRITE is shown in Figure 6-1247 and described in Table 6-1254.

Return to the Summary Table.

Figure 6-1247. MSS_DMM_BUS_SAFETY_ERR_STAT_WRITE Register

31	30	29	28	27	26	25	24	23	22	21	20	19	18	17	16	15	14	13	12	11	10	9	8	7	6	5	4	3	2	1	0
stat																															
R-0h																															

Table 6-1254. MSS_DMM_BUS_SAFETY_ERR_STAT_WRITE Register Field Descriptions

Bit	Field	Type	Reset	Description
31-0	stat	R	0h	

6.2.7.333 MSS_DMM_BUS_SAFETY_ERR_STAT_READ Register (Offset = 550h) [reset = 0h]

MSS_DMM_BUS_SAFETY_ERR_STAT_READ is shown in Figure 6-1248 and described in Table 6-1255.

Return to the Summary Table.

Figure 6-1248. MSS_DMM_BUS_SAFETY_ERR_STAT_READ Register

31	30	29	28	27	26	25	24	23	22	21	20	19	18	17	16	15	14	13	12	11	10	9	8	7	6	5	4	3	2	1	0
stat																															
R-0h																															

Table 6-1255. MSS_DMM_BUS_SAFETY_ERR_STAT_READ Register Field Descriptions

Bit	Field	Type	Reset	Description
31-0	stat	R	0h	

Copyright © 2025 Texas Instruments Incorporated

6.2.7.334 MSS_DMM_BUS_SAFETY_ERR_STAT_WRITERESP Register (Offset = 554h) [reset = 0h]

MSS_DMM_BUS_SAFETY_ERR_STAT_WRITERESP is shown in Figure 6-1249 and described in Table 6-1256.

Return to the Summary Table.

Figure 6-1249. MSS_DMM_BUS_SAFETY_ERR_STAT_WRITERESP Register

31	30	29	28	27	26	25	24	23	22	21	20	19	18	17	16	15	14	13	12	11	10	9	8	7	6	5	4	3	2	1	0
stat																															
R-0h																															

Table 6-1256. MSS_DMM_BUS_SAFETY_ERR_STAT_WRITERESP Register Field Descriptions

Bit	Field	Type	Reset	Description
31-0	stat	R	0h	

6.2.7.335 MSS_DMM_SLV_BUS_SAFETY_CTRL Register (Offset = 558h) [reset = X]

MSS_DMM_SLV_BUS_SAFETY_CTRL is shown in Figure 6-1250 and described in Table 6-1257.

Return to the Summary Table.

Figure 6-1250. MSS_DMM_SLV_BUS_SAFETY_CTRL Register

31	30	29	28	27	26	25	24
RESERVED							
R/W-X							
23	22	21	20	19	18	17	16
type							
R-0h							
15	14	13	12	11	10	9	8
RESERVED							err_clear
R/W-X							R/W-0h
7	6	5	4	3	2	1	0
RESERVED						enable	
R/W-X						R/W-7h	

Table 6-1257. MSS_DMM_SLV_BUS_SAFETY_CTRL Register Field Descriptions

Bit	Field	Type	Reset	Description
31-24	RESERVED	R/W	X	
23-16	type	R	0h	
15-9	RESERVED	R/W	X	
8	err_clear	R/W	0h	
7-3	RESERVED	R/W	X	
2-0	enable	R/W	7h	

6.2.7.336 MSS_DMM_SLV_BUS_SAFETY_FI Register (Offset = 55Ch) [reset = X]

MSS_DMM_SLV_BUS_SAFETY_FI is shown in Figure 6-1251 and described in Table 6-1258.

Return to the Summary Table.

Copyright © 2025 Texas Instruments Incorporated

Figure 6-1251. MSS_DMM_SLV_BUS_SAFETY_FI Register

31	30	29	28	27	26	25	24
safe							
R/W-0h							
23	22	21	20	19	18	17	16
main							
R/W-0h							
15	14	13	12	11	10	9	8
data							
R/W-0h							
7	6	5	4	3	2	1	0
RESERVED		ded	sec	global_safe_req	global_main_req	global_safe	global_main
R/W-X		R/W-0h	R/W-0h	R/W-0h	R/W-0h	R/W-0h	R/W-0h

Table 6-1258. MSS_DMM_SLV_BUS_SAFETY_FI Register Field Descriptions

Bit	Field	Type	Reset	Description
31-24	safe	R/W	0h	
23-16	main	R/W	0h	
15-8	data	R/W	0h	
7-6	RESERVED	R/W	X	
5	ded	R/W	0h	
4	sec	R/W	0h	
3	global_safe_req	R/W	0h	
2	global_main_req	R/W	0h	
1	global_safe	R/W	0h	
0	global_main	R/W	0h	

6.2.7.337 MSS_DMM_SLV_BUS_SAFETY_ERR Register (Offset = 560h) [reset = 0h]

MSS_DMM_SLV_BUS_SAFETY_ERR is shown in Figure 6-1252 and described in Table 6-1259.

Return to the Summary Table.

Figure 6-1252. MSS_DMM_SLV_BUS_SAFETY_ERR Register

31	30	29	28	27	26	25	24	23	22	21	20	19	18	17	16
ded								sec							
R-0h								R-0h							
15	14	13	12	11	10	9	8	7	6	5	4	3	2	1	0
comp_check								comp_err							
R-0h								R-0h							

Table 6-1259. MSS_DMM_SLV_BUS_SAFETY_ERR Register Field Descriptions

Bit	Field	Type	Reset	Description
31-24	ded	R	0h	
23-16	sec	R	0h	
15-8	comp_check	R	0h	

Copyright © 2025 Texas Instruments Incorporated

Table 6-1259. MSS_DMM_SLV_BUS_SAFETY_ERR Register Field Descriptions (continued)

Bit	Field	Type	Reset	Description
7-0	comp_err	R	0h	

6.2.7.338 MSS_DMM_SLV_BUS_SAFETY_ERR_STAT_DATA0 Register (Offset = 564h) [reset = X]

MSS_DMM_SLV_BUS_SAFETY_ERR_STAT_DATA0 is shown in Figure 6-1253 and described in Table 6-1260.

Return to the Summary Table.

Figure 6-1253. MSS_DMM_SLV_BUS_SAFETY_ERR_STAT_DATA0 Register

31	30	29	28	27	26	25	24	23	22	21	20	19	18	17	16	15	14	13	12	11	10	9	8	7	6	5	4	3	2	1	0
RESERVED																d1								d0							
R-X																R-0h								R-0h							

Table 6-1260. MSS_DMM_SLV_BUS_SAFETY_ERR_STAT_DATA0 Register Field Descriptions

Bit	Field	Type	Reset	Description
31-16	RESERVED	R	X	
15-8	d1	R	0h	
7-0	d0	R	0h	

6.2.7.339 MSS_DMM_SLV_BUS_SAFETY_ERR_STAT_CMD Register (Offset = 568h) [reset = 0h]

MSS_DMM_SLV_BUS_SAFETY_ERR_STAT_CMD is shown in Figure 6-1254 and described in Table 6-1261.

Return to the Summary Table.

Figure 6-1254. MSS_DMM_SLV_BUS_SAFETY_ERR_STAT_CMD Register

31	30	29	28	27	26	25	24	23	22	21	20	19	18	17	16	15	14	13	12	11	10	9	8	7	6	5	4	3	2	1	0
stat																															
R-0h																															

Table 6-1261. MSS_DMM_SLV_BUS_SAFETY_ERR_STAT_CMD Register Field Descriptions

Bit	Field	Type	Reset	Description
31-0	stat	R	0h	

6.2.7.340 MSS_DMM_SLV_BUS_SAFETY_ERR_STAT_WRITE Register (Offset = 56Ch) [reset = 0h]

MSS_DMM_SLV_BUS_SAFETY_ERR_STAT_WRITE is shown in Figure 6-1255 and described in Table 6-1262.

Return to the Summary Table.

Figure 6-1255. MSS_DMM_SLV_BUS_SAFETY_ERR_STAT_WRITE Register

31	30	29	28	27	26	25	24	23	22	21	20	19	18	17	16	15	14	13	12	11	10	9	8	7	6	5	4	3	2	1	0
stat																															
R-0h																															

Table 6-1262. MSS_DMM_SLV_BUS_SAFETY_ERR_STAT_WRITE Register Field Descriptions

Bit	Field	Type	Reset	Description
31-0	stat	R	0h	

Copyright © 2025 Texas Instruments Incorporated

6.2.7.341 MSS_DMM_SLV_BUS_SAFETY_ERR_STAT_READ Register (Offset = 570h) [reset = 0h]

MSS_DMM_SLV_BUS_SAFETY_ERR_STAT_READ is shown in Figure 6-1256 and described in Table 6-1263.

Return to the Summary Table.

Figure 6-1256. MSS_DMM_SLV_BUS_SAFETY_ERR_STAT_READ Register

31	30	29	28	27	26	25	24	23	22	21	20	19	18	17	16	15	14	13	12	11	10	9	8	7	6	5	4	3	2	1	0
stat																															
R-0h																															

Table 6-1263. MSS_DMM_SLV_BUS_SAFETY_ERR_STAT_READ Register Field Descriptions

Bit	Field	Type	Reset	Description
31-0	stat	R	0h	

6.2.7.342 MSS_DMM_SLV_BUS_SAFETY_ERR_STAT_WRITERESP Register (Offset = 574h) [reset = 0h]

MSS_DMM_SLV_BUS_SAFETY_ERR_STAT_WRITERESP is shown in Figure 6-1257 and described in Table 6-1264.

Return to the Summary Table.

Figure 6-1257. MSS_DMM_SLV_BUS_SAFETY_ERR_STAT_WRITERESP Register

31	30	29	28	27	26	25	24	23	22	21	20	19	18	17	16	15	14	13	12	11	10	9	8	7	6	5	4	3	2	1	0
stat																															
R-0h																															

Table 6-1264. MSS_DMM_SLV_BUS_SAFETY_ERR_STAT_WRITERESP Register Field Descriptions

Bit	Field	Type	Reset	Description
31-0	stat	R	0h	

6.2.7.343 MSS_TO_MDO_BUS_SAFETY_CTRL Register (Offset = 578h) [reset = X]

MSS_TO_MDO_BUS_SAFETY_CTRL is shown in Figure 6-1258 and described in Table 6-1265.

Return to the Summary Table.

Figure 6-1258. MSS_TO_MDO_BUS_SAFETY_CTRL Register

31	30	29	28	27	26	25	24
RESERVED							
R/W-X							
23	22	21	20	19	18	17	16
type							
R-0h							
15	14	13	12	11	10	9	8
RESERVED							err_clear
R/W-X							R/W-0h
7	6	5	4	3	2	1	0
RESERVED						enable	
R/W-X						R/W-7h	

Copyright © 2025 Texas Instruments Incorporated

Table 6-1265. MSS_TO_MDO_BUS_SAFETY_CTRL Register Field Descriptions

Bit	Field	Type	Reset	Description
31-24	RESERVED	R/W	X	
23-16	type	R	0h	
15-9	RESERVED	R/W	X	
8	err_clear	R/W	0h	
7-3	RESERVED	R/W	X	
2-0	enable	R/W	7h	

6.2.7.344 MSS_TO_MDO_BUS_SAFETY_FI Register (Offset = 57Ch) [reset = X]

MSS_TO_MDO_BUS_SAFETY_FI is shown in Figure 6-1259 and described in Table 6-1266.

Return to the Summary Table.

Figure 6-1259. MSS_TO_MDO_BUS_SAFETY_FI Register

31	30	29	28	27	26	25	24
safe							
R/W-0h							
23	22	21	20	19	18	17	16
main							
R/W-0h							
15	14	13	12	11	10	9	8
data							
R/W-0h							
7	6	5	4	3	2	1	0
RESERVED		ded	sec	global_safe_req	global_main_req	global_safe	global_main
R/W-X		R/W-0h	R/W-0h	R/W-0h	R/W-0h	R/W-0h	R/W-0h

Table 6-1266. MSS_TO_MDO_BUS_SAFETY_FI Register Field Descriptions

Bit	Field	Type	Reset	Description
31-24	safe	R/W	0h	
23-16	main	R/W	0h	
15-8	data	R/W	0h	
7-6	RESERVED	R/W	X	
5	ded	R/W	0h	
4	sec	R/W	0h	
3	global_safe_req	R/W	0h	
2	global_main_req	R/W	0h	
1	global_safe	R/W	0h	
0	global_main	R/W	0h	

6.2.7.345 MSS_TO_MDO_BUS_SAFETY_ERR Register (Offset = 580h) [reset = 0h]

MSS_TO_MDO_BUS_SAFETY_ERR is shown in Figure 6-1260 and described in Table 6-1267.

Return to the Summary Table.

Copyright © 2025 Texas Instruments Incorporated

Figure 6-1260. MSS_TO_MDO_BUS_SAFETY_ERR Register

31	30	29	28	27	26	25	24	23	22	21	20	19	18	17	16
ded								sec							
R-0h								R-0h							
15	14	13	12	11	10	9	8	7	6	5	4	3	2	1	0
comp_check								comp_err							
R-0h								R-0h							

Table 6-1267. MSS_TO_MDO_BUS_SAFETY_ERR Register Field Descriptions

Bit	Field	Type	Reset	Description
31-24	ded	R	0h	
23-16	sec	R	0h	
15-8	comp_check	R	0h	
7-0	comp_err	R	0h	

6.2.7.346 MSS_TO_MDO_BUS_SAFETY_ERR_STAT_DATA0 Register (Offset = 584h) [reset = X]

MSS_TO_MDO_BUS_SAFETY_ERR_STAT_DATA0 is shown in Figure 6-1261 and described in Table 6-1268.

Return to the Summary Table.

Figure 6-1261. MSS_TO_MDO_BUS_SAFETY_ERR_STAT_DATA0 Register

31	30	29	28	27	26	25	24	23	22	21	20	19	18	17	16	15	14	13	12	11	10	9	8	7	6	5	4	3	2	1	0
RESERVED																d1								d0							
R-X																R-0h								R-0h							

Table 6-1268. MSS_TO_MDO_BUS_SAFETY_ERR_STAT_DATA0 Register Field Descriptions

Bit	Field	Type	Reset	Description
31-16	RESERVED	R	X	
15-8	d1	R	0h	
7-0	d0	R	0h	

6.2.7.347 MSS_TO_MDO_BUS_SAFETY_ERR_STAT_CMD Register (Offset = 588h) [reset = 0h]

MSS_TO_MDO_BUS_SAFETY_ERR_STAT_CMD is shown in Figure 6-1262 and described in Table 6-1269.

Return to the Summary Table.

Figure 6-1262. MSS_TO_MDO_BUS_SAFETY_ERR_STAT_CMD Register

31	30	29	28	27	26	25	24	23	22	21	20	19	18	17	16	15	14	13	12	11	10	9	8	7	6	5	4	3	2	1	0
stat																															
R-0h																															

Table 6-1269. MSS_TO_MDO_BUS_SAFETY_ERR_STAT_CMD Register Field Descriptions

Bit	Field	Type	Reset	Description
31-0	stat	R	0h	

6.2.7.348 MSS_TO_MDO_BUS_SAFETY_ERR_STAT_WRITE Register (Offset = 58Ch) [reset = 0h]

MSS_TO_MDO_BUS_SAFETY_ERR_STAT_WRITE is shown in Figure 6-1263 and described in Table 6-1270.

Copyright © 2025 Texas Instruments Incorporated

Return to the Summary Table.

Figure 6-1263. MSS_TO_MDO_BUS_SAFETY_ERR_STAT_WRITE Register

31	30	29	28	27	26	25	24	23	22	21	20	19	18	17	16	15	14	13	12	11	10	9	8	7	6	5	4	3	2	1	0
stat																															
R-0h																															

Table 6-1270. MSS_TO_MDO_BUS_SAFETY_ERR_STAT_WRITE Register Field Descriptions

Bit	Field	Type	Reset	Description
31-0	stat	R	0h	

6.2.7.349 MSS_TO_MDO_BUS_SAFETY_ERR_STAT_READ Register (Offset = 590h) [reset = 0h]

MSS_TO_MDO_BUS_SAFETY_ERR_STAT_READ is shown in Figure 6-1264 and described in Table 6-1271.

Return to the Summary Table.

Figure 6-1264. MSS_TO_MDO_BUS_SAFETY_ERR_STAT_READ Register

31	30	29	28	27	26	25	24	23	22	21	20	19	18	17	16	15	14	13	12	11	10	9	8	7	6	5	4	3	2	1	0
stat																															
R-0h																															

Table 6-1271. MSS_TO_MDO_BUS_SAFETY_ERR_STAT_READ Register Field Descriptions

Bit	Field	Type	Reset	Description
31-0	stat	R	0h	

6.2.7.350 MSS_TO_MDO_BUS_SAFETY_ERR_STAT_WRITERESP Register (Offset = 594h) [reset = 0h]

MSS_TO_MDO_BUS_SAFETY_ERR_STAT_WRITERESP is shown in Figure 6-1265 and described in Table 6-1272.

Return to the Summary Table.

Figure 6-1265. MSS_TO_MDO_BUS_SAFETY_ERR_STAT_WRITERESP Register

31	30	29	28	27	26	25	24	23	22	21	20	19	18	17	16	15	14	13	12	11	10	9	8	7	6	5	4	3	2	1	0
stat																															
R-0h																															

Table 6-1272. MSS_TO_MDO_BUS_SAFETY_ERR_STAT_WRITERESP Register Field Descriptions

Bit	Field	Type	Reset	Description
31-0	stat	R	0h	

6.2.7.351 MSS_SCRP_BUS_SAFETY_CTRL Register (Offset = 598h) [reset = X]

MSS_SCRP_BUS_SAFETY_CTRL is shown in Figure 6-1266 and described in Table 6-1273.

Return to the Summary Table.

Figure 6-1266. MSS_SCRP_BUS_SAFETY_CTRL Register

31	30	29	28	27	26	25	24
RESERVED							
R/W-X							

Copyright © 2025 Texas Instruments Incorporated

Figure 6-1266. MSS_SCRP_BUS_SAFETY_CTRL Register (continued)

23	22	21	20	19	18	17	16
type							
R-0h							
15	14	13	12	11	10	9	8
RESERVED							err_clear
R/W-X							R/W-0h
7	6	5	4	3	2	1	0
RESERVED						enable	
R/W-X						R/W-7h	

Table 6-1273. MSS_SCRP_BUS_SAFETY_CTRL Register Field Descriptions

Bit	Field	Type	Reset	Description
31-24	RESERVED	R/W	X	
23-16	type	R	0h	
15-9	RESERVED	R/W	X	
8	err_clear	R/W	0h	
7-3	RESERVED	R/W	X	
2-0	enable	R/W	7h	

6.2.7.352 MSS_SCRP_BUS_SAFETY_FI Register (Offset = 59Ch) [reset = X]

MSS_SCRP_BUS_SAFETY_FI is shown in Figure 6-1267 and described in Table 6-1274.

Return to the Summary Table.

Figure 6-1267. MSS_SCRP_BUS_SAFETY_FI Register

31	30	29	28	27	26	25	24
safe							
R/W-0h							
23	22	21	20	19	18	17	16
main							
R/W-0h							
15	14	13	12	11	10	9	8
data							
R/W-0h							
7	6	5	4	3	2	1	0
RESERVED		ded	sec	global_safe_req	global_main_req	global_safe	global_main
R/W-X		R/W-0h	R/W-0h	R/W-0h	R/W-0h	R/W-0h	R/W-0h

Table 6-1274. MSS_SCRP_BUS_SAFETY_FI Register Field Descriptions

Bit	Field	Type	Reset	Description
31-24	safe	R/W	0h	
23-16	main	R/W	0h	
15-8	data	R/W	0h	
7-6	RESERVED	R/W	X	
5	ded	R/W	0h	

Copyright © 2025 Texas Instruments Incorporated

Table 6-1274. MSS_SCRP_BUS_SAFETY_FI Register Field Descriptions (continued)

Bit	Field	Type	Reset	Description
4	sec	R/W	0h	
3	global_safe_req	R/W	0h	
2	global_main_req	R/W	0h	
1	global_safe	R/W	0h	
0	global_main	R/W	0h	

6.2.7.353 MSS_SCRP_BUS_SAFETY_ERR Register (Offset = 5A0h) [reset = 0h]

MSS_SCRP_BUS_SAFETY_ERR is shown in Figure 6-1268 and described in Table 6-1275.

Return to the Summary Table.

Figure 6-1268. MSS_SCRP_BUS_SAFETY_ERR Register

31	30	29	28	27	26	25	24	23	22	21	20	19	18	17	16
ded								sec							
R-0h								R-0h							
15	14	13	12	11	10	9	8	7	6	5	4	3	2	1	0
comp_check								comp_err							
R-0h								R-0h							

Table 6-1275. MSS_SCRP_BUS_SAFETY_ERR Register Field Descriptions

Bit	Field	Type	Reset	Description
31-24	ded	R	0h	
23-16	sec	R	0h	
15-8	comp_check	R	0h	
7-0	comp_err	R	0h	

6.2.7.354 MSS_SCRP_BUS_SAFETY_ERR_STAT_DATA0 Register (Offset = 5A4h) [reset = X]

MSS_SCRP_BUS_SAFETY_ERR_STAT_DATA0 is shown in Figure 6-1269 and described in Table 6-1276.

Return to the Summary Table.

Figure 6-1269. MSS_SCRP_BUS_SAFETY_ERR_STAT_DATA0 Register

31	30	29	28	27	26	25	24	23	22	21	20	19	18	17	16	15	14	13	12	11	10	9	8	7	6	5	4	3	2	1	0
RESERVED																d1								d0							
R-X																R-0h								R-0h							

Table 6-1276. MSS_SCRP_BUS_SAFETY_ERR_STAT_DATA0 Register Field Descriptions

Bit	Field	Type	Reset	Description
31-16	RESERVED	R	X	
15-8	d1	R	0h	
7-0	d0	R	0h	

6.2.7.355 MSS_SCRP_BUS_SAFETY_ERR_STAT_CMD Register (Offset = 5A8h) [reset = 0h]

MSS_SCRP_BUS_SAFETY_ERR_STAT_CMD is shown in Figure 6-1270 and described in Table 6-1277.

Return to the Summary Table.

Copyright © 2025 Texas Instruments Incorporated

Figure 6-1270. MSS_SCRP_BUS_SAFETY_ERR_STAT_CMD Register

31	30	29	28	27	26	25	24	23	22	21	20	19	18	17	16	15	14	13	12	11	10	9	8	7	6	5	4	3	2	1	0
stat																															
R-0h																															

Table 6-1277. MSS_SCRP_BUS_SAFETY_ERR_STAT_CMD Register Field Descriptions

Bit	Field	Type	Reset	Description
31-0	stat	R	0h	

6.2.7.356 MSS_SCRP_BUS_SAFETY_ERR_STAT_WRITE Register (Offset = 5ACh) [reset = 0h]

MSS_SCRP_BUS_SAFETY_ERR_STAT_WRITE is shown in Figure 6-1271 and described in Table 6-1278.

Return to the Summary Table.

Figure 6-1271. MSS_SCRP_BUS_SAFETY_ERR_STAT_WRITE Register

31	30	29	28	27	26	25	24	23	22	21	20	19	18	17	16	15	14	13	12	11	10	9	8	7	6	5	4	3	2	1	0
stat																															
R-0h																															

Table 6-1278. MSS_SCRP_BUS_SAFETY_ERR_STAT_WRITE Register Field Descriptions

Bit	Field	Type	Reset	Description
31-0	stat	R	0h	

6.2.7.357 MSS_SCRP_BUS_SAFETY_ERR_STAT_READ Register (Offset = 5B0h) [reset = 0h]

MSS_SCRP_BUS_SAFETY_ERR_STAT_READ is shown in Figure 6-1272 and described in Table 6-1279.

Return to the Summary Table.

Figure 6-1272. MSS_SCRP_BUS_SAFETY_ERR_STAT_READ Register

31	30	29	28	27	26	25	24	23	22	21	20	19	18	17	16	15	14	13	12	11	10	9	8	7	6	5	4	3	2	1	0
stat																															
R-0h																															

Table 6-1279. MSS_SCRP_BUS_SAFETY_ERR_STAT_READ Register Field Descriptions

Bit	Field	Type	Reset	Description
31-0	stat	R	0h	

6.2.7.358 MSS_SCRP_BUS_SAFETY_ERR_STAT_WRITERESP Register (Offset = 5B4h) [reset = 0h]

MSS_SCRP_BUS_SAFETY_ERR_STAT_WRITERESP is shown in Figure 6-1273 and described in Table 6-1280.

Return to the Summary Table.

Figure 6-1273. MSS_SCRP_BUS_SAFETY_ERR_STAT_WRITERESP Register

31	30	29	28	27	26	25	24	23	22	21	20	19	18	17	16	15	14	13	12	11	10	9	8	7	6	5	4	3	2	1	0
stat																															
R-0h																															

Copyright © 2025 Texas Instruments Incorporated

Table 6-1280. MSS_SCRP_BUS_SAFETY_ERR_STAT_WRITERESP Register Field Descriptions

Bit	Field	Type	Reset	Description
31-0	stat	R	0h	

6.2.7.359 MSS_CR5A_AHB_BUS_SAFETY_CTRL Register (Offset = 5B8h) [reset = X]

MSS_CR5A_AHB_BUS_SAFETY_CTRL is shown in Figure 6-1274 and described in Table 6-1281.

Return to the Summary Table.

Figure 6-1274. MSS_CR5A_AHB_BUS_SAFETY_CTRL Register

31	30	29	28	27	26	25	24
RESERVED							
R/W-X							
23	22	21	20	19	18	17	16
type							
R-0h							
15	14	13	12	11	10	9	8
RESERVED							err_clear
R/W-X							R/W-0h
7	6	5	4	3	2	1	0
RESERVED						enable	
R/W-X						R/W-7h	

Table 6-1281. MSS_CR5A_AHB_BUS_SAFETY_CTRL Register Field Descriptions

Bit	Field	Type	Reset	Description
31-24	RESERVED	R/W	X	
23-16	type	R	0h	
15-9	RESERVED	R/W	X	
8	err_clear	R/W	0h	
7-3	RESERVED	R/W	X	
2-0	enable	R/W	7h	

6.2.7.360 MSS_CR5A_AHB_BUS_SAFETY_FI Register (Offset = 5BCh) [reset = X]

MSS_CR5A_AHB_BUS_SAFETY_FI is shown in Figure 6-1275 and described in Table 6-1282.

Return to the Summary Table.

Figure 6-1275. MSS_CR5A_AHB_BUS_SAFETY_FI Register

31	30	29	28	27	26	25	24
safe							
R/W-0h							
23	22	21	20	19	18	17	16
main							
R/W-0h							
15	14	13	12	11	10	9	8
data							
R/W-0h							

Copyright © 2025 Texas Instruments Incorporated

Figure 6-1275. MSS_CR5A_AHB_BUS_SAFETY_FI Register (continued)

7	6	5	4	3	2	1	0
RESERVED		ded	sec	global_safe_req	global_main_req	global_safe	global_main
R/W-X		R/W-0h	R/W-0h	R/W-0h	R/W-0h	R/W-0h	R/W-0h

Table 6-1282. MSS_CR5A_AHB_BUS_SAFETY_FI Register Field Descriptions

Bit	Field	Type	Reset	Description
31-24	safe	R/W	0h	
23-16	main	R/W	0h	
15-8	data	R/W	0h	
7-6	RESERVED	R/W	X	
5	ded	R/W	0h	
4	sec	R/W	0h	
3	global_safe_req	R/W	0h	
2	global_main_req	R/W	0h	
1	global_safe	R/W	0h	
0	global_main	R/W	0h	

6.2.7.361 MSS_CR5A_AHB_BUS_SAFETY_ERR Register (Offset = 5C0h) [reset = 0h]

MSS_CR5A_AHB_BUS_SAFETY_ERR is shown in Figure 6-1276 and described in Table 6-1283.

Return to the Summary Table.

Figure 6-1276. MSS_CR5A_AHB_BUS_SAFETY_ERR Register

31	30	29	28	27	26	25	24	23	22	21	20	19	18	17	16
ded								sec							
R-0h								R-0h							
15	14	13	12	11	10	9	8	7	6	5	4	3	2	1	0
comp_check								comp_err							
R-0h								R-0h							

Table 6-1283. MSS_CR5A_AHB_BUS_SAFETY_ERR Register Field Descriptions

Bit	Field	Type	Reset	Description
31-24	ded	R	0h	
23-16	sec	R	0h	
15-8	comp_check	R	0h	
7-0	comp_err	R	0h	

6.2.7.362 MSS_CR5A_AHB_BUS_SAFETY_ERR_STAT_DATA0 Register (Offset = 5C4h) [reset = X]

MSS_CR5A_AHB_BUS_SAFETY_ERR_STAT_DATA0 is shown in Figure 6-1277 and described in Table 6-1284.

Return to the Summary Table.

Figure 6-1277. MSS_CR5A_AHB_BUS_SAFETY_ERR_STAT_DATA0 Register

31	30	29	28	27	26	25	24	23	22	21	20	19	18	17	16	15	14	13	12	11	10	9	8	7	6	5	4	3	2	1	0
RESERVED																d1								d0							
R-X																R-0h								R-0h							

Copyright © 2025 Texas Instruments Incorporated

Figure 6-1277. MSS_CR5A_AHB_BUS_SAFETY_ERR_STAT_DATA0 Register (continued)

Table 6-1284. MSS_CR5A_AHB_BUS_SAFETY_ERR_STAT_DATA0 Register Field Descriptions

Bit	Field	Type	Reset	Description
31-16	RESERVED	R	X	
15-8	d1	R	0h	
7-0	d0	R	0h	

6.2.7.363 MSS_CR5A_AHB_BUS_SAFETY_ERR_STAT_CMD Register (Offset = 5C8h) [reset = 0h]

MSS_CR5A_AHB_BUS_SAFETY_ERR_STAT_CMD is shown in Figure 6-1278 and described in Table 6-1285.

Return to the Summary Table.

Figure 6-1278. MSS_CR5A_AHB_BUS_SAFETY_ERR_STAT_CMD Register

31	30	29	28	27	26	25	24	23	22	21	20	19	18	17	16	15	14	13	12	11	10	9	8	7	6	5	4	3	2	1	0
stat																															
R-0h																															

Table 6-1285. MSS_CR5A_AHB_BUS_SAFETY_ERR_STAT_CMD Register Field Descriptions

Bit	Field	Type	Reset	Description
31-0	stat	R	0h	

6.2.7.364 MSS_CR5A_AHB_BUS_SAFETY_ERR_STAT_WRITE Register (Offset = 5CCh) [reset = 0h]

MSS_CR5A_AHB_BUS_SAFETY_ERR_STAT_WRITE is shown in Figure 6-1279 and described in Table 6-1286.

Return to the Summary Table.

Figure 6-1279. MSS_CR5A_AHB_BUS_SAFETY_ERR_STAT_WRITE Register

31	30	29	28	27	26	25	24	23	22	21	20	19	18	17	16	15	14	13	12	11	10	9	8	7	6	5	4	3	2	1	0
stat																															
R-0h																															

Table 6-1286. MSS_CR5A_AHB_BUS_SAFETY_ERR_STAT_WRITE Register Field Descriptions

Bit	Field	Type	Reset	Description
31-0	stat	R	0h	

6.2.7.365 MSS_CR5A_AHB_BUS_SAFETY_ERR_STAT_READ Register (Offset = 5D0h) [reset = 0h]

MSS_CR5A_AHB_BUS_SAFETY_ERR_STAT_READ is shown in Figure 6-1280 and described in Table 6-1287.

Return to the Summary Table.

Figure 6-1280. MSS_CR5A_AHB_BUS_SAFETY_ERR_STAT_READ Register

31	30	29	28	27	26	25	24	23	22	21	20	19	18	17	16	15	14	13	12	11	10	9	8	7	6	5	4	3	2	1	0
stat																															
R-0h																															

Copyright © 2025 Texas Instruments Incorporated

Table 6-1287. MSS_CR5A_AHB_BUS_SAFETY_ERR_STAT_READ Register Field Descriptions

Bit	Field	Type	Reset	Description
31-0	stat	R	0h	

6.2.7.366 MSS_CR5A_AHB_BUS_SAFETY_ERR_STAT_WRITERESP Register (Offset = 5D4h) [reset = 0h]

MSS_CR5A_AHB_BUS_SAFETY_ERR_STAT_WRITERESP is shown in Figure 6-1281 and described in Table 6-1288.

Return to the Summary Table.

Figure 6-1281. MSS_CR5A_AHB_BUS_SAFETY_ERR_STAT_WRITERESP Register

31	30	29	28	27	26	25	24	23	22	21	20	19	18	17	16	15	14	13	12	11	10	9	8	7	6	5	4	3	2	1	0
stat																															
R-0h																															

Table 6-1288. MSS_CR5A_AHB_BUS_SAFETY_ERR_STAT_WRITERESP Register Field Descriptions

Bit	Field	Type	Reset	Description
31-0	stat	R	0h	

6.2.7.367 MSS_CR5B_AHB_BUS_SAFETY_CTRL Register (Offset = 5D8h) [reset = X]

MSS_CR5B_AHB_BUS_SAFETY_CTRL is shown in Figure 6-1282 and described in Table 6-1289.

Return to the Summary Table.

Figure 6-1282. MSS_CR5B_AHB_BUS_SAFETY_CTRL Register

31	30	29	28	27	26	25	24
RESERVED							
R/W-X							
23	22	21	20	19	18	17	16
type							
R-0h							
15	14	13	12	11	10	9	8
RESERVED							err_clear
R/W-X							R/W-0h
7	6	5	4	3	2	1	0
RESERVED						enable	
R/W-X						R/W-7h	

Table 6-1289. MSS_CR5B_AHB_BUS_SAFETY_CTRL Register Field Descriptions

Bit	Field	Type	Reset	Description
31-24	RESERVED	R/W	X	
23-16	type	R	0h	
15-9	RESERVED	R/W	X	
8	err_clear	R/W	0h	
7-3	RESERVED	R/W	X	
2-0	enable	R/W	7h	

Copyright © 2025 Texas Instruments Incorporated

6.2.7.368 MSS_CR5B_AHB_BUS_SAFETY_FI Register (Offset = 5DCh) [reset = X]

MSS_CR5B_AHB_BUS_SAFETY_FI is shown in Figure 6-1283 and described in Table 6-1290.

Return to the Summary Table.

Figure 6-1283. MSS_CR5B_AHB_BUS_SAFETY_FI Register

31	30	29	28	27	26	25	24
safe							
R/W-0h							
23	22	21	20	19	18	17	16
main							
R/W-0h							
15	14	13	12	11	10	9	8
data							
R/W-0h							
7	6	5	4	3	2	1	0
RESERVED		ded	sec	global_safe_req	global_main_req	global_safe	global_main
R/W-X		R/W-0h	R/W-0h	R/W-0h	R/W-0h	R/W-0h	R/W-0h

Table 6-1290. MSS_CR5B_AHB_BUS_SAFETY_FI Register Field Descriptions

Bit	Field	Type	Reset	Description
31-24	safe	R/W	0h	
23-16	main	R/W	0h	
15-8	data	R/W	0h	
7-6	RESERVED	R/W	X	
5	ded	R/W	0h	
4	sec	R/W	0h	
3	global_safe_req	R/W	0h	
2	global_main_req	R/W	0h	
1	global_safe	R/W	0h	
0	global_main	R/W	0h	

6.2.7.369 MSS_CR5B_AHB_BUS_SAFETY_ERR Register (Offset = 5E0h) [reset = 0h]

MSS_CR5B_AHB_BUS_SAFETY_ERR is shown in Figure 6-1284 and described in Table 6-1291.

Return to the Summary Table.

Figure 6-1284. MSS_CR5B_AHB_BUS_SAFETY_ERR Register

31	30	29	28	27	26	25	24	23	22	21	20	19	18	17	16
ded								sec							
R-0h								R-0h							
15	14	13	12	11	10	9	8	7	6	5	4	3	2	1	0
comp_check								comp_err							
R-0h								R-0h							

Copyright © 2025 Texas Instruments Incorporated

Table 6-1291. MSS_CR5B_AHB_BUS_SAFETY_ERR Register Field Descriptions

Bit	Field	Type	Reset	Description
31-24	ded	R	0h	
23-16	sec	R	0h	
15-8	comp_check	R	0h	
7-0	comp_err	R	0h	

6.2.7.370 MSS_CR5B_AHB_BUS_SAFETY_ERR_STAT_DATA0 Register (Offset = 5E4h) [reset = X]

MSS_CR5B_AHB_BUS_SAFETY_ERR_STAT_DATA0 is shown in Figure 6-1285 and described in Table 6-1292.

Return to the Summary Table.

Figure 6-1285. MSS_CR5B_AHB_BUS_SAFETY_ERR_STAT_DATA0 Register

31	30	29	28	27	26	25	24	23	22	21	20	19	18	17	16	15	14	13	12	11	10	9	8	7	6	5	4	3	2	1	0
RESERVED																d1								d0							
R-X																R-0h								R-0h							

Table 6-1292. MSS_CR5B_AHB_BUS_SAFETY_ERR_STAT_DATA0 Register Field Descriptions

Bit	Field	Type	Reset	Description
31-16	RESERVED	R	X	
15-8	d1	R	0h	
7-0	d0	R	0h	

6.2.7.371 MSS_CR5B_AHB_BUS_SAFETY_ERR_STAT_CMD Register (Offset = 5E8h) [reset = 0h]

MSS_CR5B_AHB_BUS_SAFETY_ERR_STAT_CMD is shown in Figure 6-1286 and described in Table 6-1293.

Return to the Summary Table.

Figure 6-1286. MSS_CR5B_AHB_BUS_SAFETY_ERR_STAT_CMD Register

31	30	29	28	27	26	25	24	23	22	21	20	19	18	17	16	15	14	13	12	11	10	9	8	7	6	5	4	3	2	1	0
stat																															
R-0h																															

Table 6-1293. MSS_CR5B_AHB_BUS_SAFETY_ERR_STAT_CMD Register Field Descriptions

Bit	Field	Type	Reset	Description
31-0	stat	R	0h	

6.2.7.372 MSS_CR5B_AHB_BUS_SAFETY_ERR_STAT_WRITE Register (Offset = 5ECh) [reset = 0h]

MSS_CR5B_AHB_BUS_SAFETY_ERR_STAT_WRITE is shown in Figure 6-1287 and described in Table 6-1294.

Return to the Summary Table.

Figure 6-1287. MSS_CR5B_AHB_BUS_SAFETY_ERR_STAT_WRITE Register

31	30	29	28	27	26	25	24	23	22	21	20	19	18	17	16	15	14	13	12	11	10	9	8	7	6	5	4	3	2	1	0
stat																															
R-0h																															

Copyright © 2025 Texas Instruments Incorporated

Table 6-1294. MSS_CR5B_AHB_BUS_SAFETY_ERR_STAT_WRITE Register Field Descriptions

Bit	Field	Type	Reset	Description
31-0	stat	R	0h	

6.2.7.373 MSS_CR5B_AHB_BUS_SAFETY_ERR_STAT_READ Register (Offset = 5F0h) [reset = 0h]

MSS_CR5B_AHB_BUS_SAFETY_ERR_STAT_READ is shown in Figure 6-1288 and described in Table 6-1295.

Return to the Summary Table.

Figure 6-1288. MSS_CR5B_AHB_BUS_SAFETY_ERR_STAT_READ Register

31	30	29	28	27	26	25	24	23	22	21	20	19	18	17	16	15	14	13	12	11	10	9	8	7	6	5	4	3	2	1	0
stat																															
R-0h																															

Table 6-1295. MSS_CR5B_AHB_BUS_SAFETY_ERR_STAT_READ Register Field Descriptions

Bit	Field	Type	Reset	Description
31-0	stat	R	0h	

6.2.7.374 MSS_CR5B_AHB_BUS_SAFETY_ERR_STAT_WRITERESP Register (Offset = 5F4h) [reset = 0h]

MSS_CR5B_AHB_BUS_SAFETY_ERR_STAT_WRITERESP is shown in Figure 6-1289 and described in Table 6-1296.

Return to the Summary Table.

Figure 6-1289. MSS_CR5B_AHB_BUS_SAFETY_ERR_STAT_WRITERESP Register

31	30	29	28	27	26	25	24	23	22	21	20	19	18	17	16	15	14	13	12	11	10	9	8	7	6	5	4	3	2	1	0
stat																															
R-0h																															

Table 6-1296. MSS_CR5B_AHB_BUS_SAFETY_ERR_STAT_WRITERESP Register Field Descriptions

Bit	Field	Type	Reset	Description
31-0	stat	R	0h	

6.2.7.375 DMM_CTRL_REG Register (Offset = 5F8h) [reset = X]

DMM_CTRL_REG is shown in Figure 6-1290 and described in Table 6-1297.

Return to the Summary Table.

Figure 6-1290. DMM_CTRL_REG Register

31	30	29	28	27	26	25	24
RESERVED							
R/W-X							
23	22	21	20	19	18	17	16
RESERVED							
R/W-X							
15	14	13	12	11	10	9	8
RESERVED							
R/W-X							

Copyright © 2025 Texas Instruments Incorporated

Figure 6-1290. DMM_CTRL_REG Register (continued)

7	6	5	4	3	2	1	0
RESERVED							dmm_pad_select
R/W-X							R/W-0h

Table 6-1297. DMM_CTRL_REG Register Field Descriptions

Bit	Field	Type	Reset	Description
31-1	RESERVED	R/W	X	
0	dmm_pad_select	R/W	0h	0: SOC will be able to send the packet to DMMA/B 1: PAD will be able to send the packet to DMMA/B controlling from PAD

6.2.7.376 MSS_CR5A_MBOX_WRITE_DONE Register (Offset = 5FCh) [reset = X]

MSS_CR5A_MBOX_WRITE_DONE is shown in Figure 6-1291 and described in Table 6-1298.

Return to the Summary Table.

Figure 6-1291. MSS_CR5A_MBOX_WRITE_DONE Register

31	30	29	28	27	26	25	24
RESERVED			proc_7	RESERVED			proc_6
R/W-X			R/W-0h	R/W-X			R/W-0h
23	22	21	20	19	18	17	16
RESERVED			proc_5	RESERVED			proc_4
R/W-X			R/W-0h	R/W-X			R/W-0h
15	14	13	12	11	10	9	8
RESERVED			proc_3	RESERVED			proc_2
R/W-X			R/W-0h	R/W-X			R/W-0h
7	6	5	4	3	2	1	0
RESERVED			proc_1	RESERVED			proc_0
R/W-X			R/W-0h	R/W-X			R/W-0h

Table 6-1298. MSS_CR5A_MBOX_WRITE_DONE Register Field Descriptions

Bit	Field	Type	Reset	Description
31-29	RESERVED	R/W	X	
28	proc_7	R/W	0h	Write pulse bit field: This register should be written once finishing writing into the mailbox memory of processor 7
27-25	RESERVED	R/W	X	
24	proc_6	R/W	0h	Write pulse bit field: This register should be written once finishing writing into the mailbox memory of processor 6
23-21	RESERVED	R/W	X	
20	proc_5	R/W	0h	Write pulse bit field: This register should be written once finishing writing into the mailbox memory of processor 5
19-17	RESERVED	R/W	X	
16	proc_4	R/W	0h	Write pulse bit field: This register should be written once finishing writing into the mailbox memory of processor 4
15-13	RESERVED	R/W	X	
12	proc_3	R/W	0h	Write pulse bit field: This register should be written once finishing writing into the mailbox memory of processor 3
11-9	RESERVED	R/W	X	

Copyright © 2025 Texas Instruments Incorporated

Table 6-1298. MSS_CR5A_MBOX_WRITE_DONE Register Field Descriptions (continued)

Bit	Field	Type	Reset	Description
8	proc_2	R/W	0h	Write pulse bit field: This register should be written once finishing writing into the mailbox memory of processor 2
7-5	RESERVED	R/W	X	
4	proc_1	R/W	0h	Write pulse bit field: This register should be written once finishing writing into the mailbox memory of processor 1
3-1	RESERVED	R/W	X	
0	proc_0	R/W	0h	Write pulse bit field: This register should be written once finishing writing into the mailbox memory of processor 0

6.2.7.377 MSS_CR5A_MBOX_READ_REQ Register (Offset = 600h) [reset = X]

MSS_CR5A_MBOX_READ_REQ is shown in Figure 6-1292 and described in Table 6-1299.

Return to the Summary Table.

Figure 6-1292. MSS_CR5A_MBOX_READ_REQ Register

31	30	29	28	27	26	25	24
RESERVED			proc_7	RESERVED			proc_6
R/W-X			R/W-0h	R/W-X			R/W-0h
23	22	21	20	19	18	17	16
RESERVED			proc_5	RESERVED			proc_4
R/W-X			R/W-0h	R/W-X			R/W-0h
15	14	13	12	11	10	9	8
RESERVED			proc_3	RESERVED			proc_2
R/W-X			R/W-0h	R/W-X			R/W-0h
7	6	5	4	3	2	1	0
RESERVED			proc_1	RESERVED			proc_0
R/W-X			R/W-0h	R/W-X			R/W-0h

Table 6-1299. MSS_CR5A_MBOX_READ_REQ Register Field Descriptions

Bit	Field	Type	Reset	Description
31-29	RESERVED	R/W	X	
28	proc_7	R/W	0h	This is request from processor 7 to mss_cr5a. Requesting it to read from mailbox.
27-25	RESERVED	R/W	X	
24	proc_6	R/W	0h	This is request from processor 6 to mss_cr5a. Requesting it to read from mailbox.
23-21	RESERVED	R/W	X	
20	proc_5	R/W	0h	This is request from processor 5 to mss_cr5a. Requesting it to read from mailbox.
19-17	RESERVED	R/W	X	
16	proc_4	R/W	0h	This is request from processor 4 to mss_cr5a. Requesting it to read from mailbox.
15-13	RESERVED	R/W	X	
12	proc_3	R/W	0h	This is request from processor 3 to mss_cr5a. Requesting it to read from mailbox.
11-9	RESERVED	R/W	X	
8	proc_2	R/W	0h	This is request from processor 2 to mss_cr5a. Requesting it to read from mailbox.

Copyright © 2025 Texas Instruments Incorporated

Table 6-1299. MSS_CR5A_MBOX_READ_REQ Register Field Descriptions (continued)

Bit	Field	Type	Reset	Description
7-5	RESERVED	R/W	X	
4	proc_1	R/W	0h	This is request from processor 1 to mss_cr5a. Requesting it to read from mailbox.
3-1	RESERVED	R/W	X	
0	proc_0	R/W	0h	This is request from processor 0 to mss_cr5a. Requesting it to read from mailbox.

6.2.7.378 MSS_CR5A_MBOX_READ_DONE Register (Offset = 604h) [reset = X]

MSS_CR5A_MBOX_READ_DONE is shown in Figure 6-1293 and described in Table 6-1300.

Return to the Summary Table.

Figure 6-1293. MSS_CR5A_MBOX_READ_DONE Register

31	30	29	28	27	26	25	24
RESERVED			proc_7	RESERVED			proc_6
R/W-X			R/W-0h	R/W-X			R/W-0h
23	22	21	20	19	18	17	16
RESERVED			proc_5	RESERVED			proc_4
R/W-X			R/W-0h	R/W-X			R/W-0h
15	14	13	12	11	10	9	8
RESERVED			proc_3	RESERVED			proc_2
R/W-X			R/W-0h	R/W-X			R/W-0h
7	6	5	4	3	2	1	0
RESERVED			proc_1	RESERVED			proc_0
R/W-X			R/W-0h	R/W-X			R/W-0h

Table 6-1300. MSS_CR5A_MBOX_READ_DONE Register Field Descriptions

Bit	Field	Type	Reset	Description
31-29	RESERVED	R/W	X	
28	proc_7	R/W	0h	This register should be written once finishing reading from CR5A's mailbox written by proc 7
27-25	RESERVED	R/W	X	
24	proc_6	R/W	0h	This register should be written once finishing reading from CR5A's mailbox written by proc 6
23-21	RESERVED	R/W	X	
20	proc_5	R/W	0h	This register should be written once finishing reading from CR5A's mailbox written by proc 5
19-17	RESERVED	R/W	X	
16	proc_4	R/W	0h	This register should be written once finishing reading from CR5A's mailbox written by proc 4
15-13	RESERVED	R/W	X	
12	proc_3	R/W	0h	This register should be written once finishing reading from CR5A's mailbox written by proc 3
11-9	RESERVED	R/W	X	
8	proc_2	R/W	0h	This register should be written once finishing reading from CR5A's mailbox written by proc 2
7-5	RESERVED	R/W	X	

Copyright © 2025 Texas Instruments Incorporated

Table 6-1300. MSS_CR5A_MBOX_READ_DONE Register Field Descriptions (continued)

Bit	Field	Type	Reset	Description
4	proc_1	R/W	0h	This register should be written once finishing reading from CR5A's mailbox written by proc 1
3-1	RESERVED	R/W	X	
0	proc_0	R/W	0h	This register should be written once finishing reading from CR5A's mailbox written by proc 0

6.2.7.379 MSS_CR5B_MBOX_WRITE_DONE Register (Offset = 608h) [reset = X]

MSS_CR5B_MBOX_WRITE_DONE is shown in Figure 6-1294 and described in Table 6-1301.

Return to the Summary Table.

Figure 6-1294. MSS_CR5B_MBOX_WRITE_DONE Register

31	30	29	28	27	26	25	24
RESERVED			proc_7	RESERVED			proc_6
R/W-X			R/W-0h	R/W-X			R/W-0h
23	22	21	20	19	18	17	16
RESERVED			proc_5	RESERVED			proc_4
R/W-X			R/W-0h	R/W-X			R/W-0h
15	14	13	12	11	10	9	8
RESERVED			proc_3	RESERVED			proc_2
R/W-X			R/W-0h	R/W-X			R/W-0h
7	6	5	4	3	2	1	0
RESERVED			proc_1	RESERVED			proc_0
R/W-X			R/W-0h	R/W-X			R/W-0h

Table 6-1301. MSS_CR5B_MBOX_WRITE_DONE Register Field Descriptions

Bit	Field	Type	Reset	Description
31-29	RESERVED	R/W	X	
28	proc_7	R/W	0h	Write pulse bit field: This register should be written once finishing writing into the mailbox memory of processor 7
27-25	RESERVED	R/W	X	
24	proc_6	R/W	0h	Write pulse bit field: This register should be written once finishing writing into the mailbox memory of processor 6
23-21	RESERVED	R/W	X	
20	proc_5	R/W	0h	Write pulse bit field: This register should be written once finishing writing into the mailbox memory of processor 5
19-17	RESERVED	R/W	X	
16	proc_4	R/W	0h	Write pulse bit field: This register should be written once finishing writing into the mailbox memory of processor 4
15-13	RESERVED	R/W	X	
12	proc_3	R/W	0h	Write pulse bit field: This register should be written once finishing writing into the mailbox memory of processor 3
11-9	RESERVED	R/W	X	
8	proc_2	R/W	0h	Write pulse bit field: This register should be written once finishing writing into the mailbox memory of processor 2
7-5	RESERVED	R/W	X	
4	proc_1	R/W	0h	Write pulse bit field: This register should be written once finishing writing into the mailbox memory of processor 1

Copyright © 2025 Texas Instruments Incorporated

Table 6-1301. MSS_CR5B_MBOX_WRITE_DONE Register Field Descriptions (continued)

Bit	Field	Type	Reset	Description
3-1	RESERVED	R/W	X	
0	proc_0	R/W	0h	Write pulse bit field: This register should be written once finishing writing into the mailbox memory of processor 0

6.2.7.380 MSS_CR5B_MBOX_READ_REQ Register (Offset = 60Ch) [reset = X]

MSS_CR5B_MBOX_READ_REQ is shown in Figure 6-1295 and described in Table 6-1302.

Return to the Summary Table.

Figure 6-1295. MSS_CR5B_MBOX_READ_REQ Register

31	30	29	28	27	26	25	24
RESERVED			proc_7	RESERVED			proc_6
R/W-X			R/W-0h	R/W-X			R/W-0h
23	22	21	20	19	18	17	16
RESERVED			proc_5	RESERVED			proc_4
R/W-X			R/W-0h	R/W-X			R/W-0h
15	14	13	12	11	10	9	8
RESERVED			proc_3	RESERVED			proc_2
R/W-X			R/W-0h	R/W-X			R/W-0h
7	6	5	4	3	2	1	0
RESERVED			proc_1	RESERVED			proc_0
R/W-X			R/W-0h	R/W-X			R/W-0h

Table 6-1302. MSS_CR5B_MBOX_READ_REQ Register Field Descriptions

Bit	Field	Type	Reset	Description
31-29	RESERVED	R/W	X	
28	proc_7	R/W	0h	This is request from processor 7 to mss_CR5B. Requesting it to read from mailbox.
27-25	RESERVED	R/W	X	
24	proc_6	R/W	0h	This is request from processor 6 to mss_CR5B. Requesting it to read from mailbox.
23-21	RESERVED	R/W	X	
20	proc_5	R/W	0h	This is request from processor 5 to mss_CR5B. Requesting it to read from mailbox.
19-17	RESERVED	R/W	X	
16	proc_4	R/W	0h	This is request from processor 4 to mss_CR5B. Requesting it to read from mailbox.
15-13	RESERVED	R/W	X	
12	proc_3	R/W	0h	This is request from processor 3 to mss_CR5B. Requesting it to read from mailbox.
11-9	RESERVED	R/W	X	
8	proc_2	R/W	0h	This is request from processor 2 to mss_CR5B. Requesting it to read from mailbox.
7-5	RESERVED	R/W	X	
4	proc_1	R/W	0h	This is request from processor 1 to mss_CR5B. Requesting it to read from mailbox.
3-1	RESERVED	R/W	X	

Copyright © 2025 Texas Instruments Incorporated

Table 6-1302. MSS_CR5B_MBOX_READ_REQ Register Field Descriptions (continued)

Bit	Field	Type	Reset	Description
0	proc_0	R/W	0h	This is request from processor 0 to mss_CR5B. Requesting it to read from mailbox.

6.2.7.381 MSS_CR5B_MBOX_READ_DONE Register (Offset = 610h) [reset = X]

MSS_CR5B_MBOX_READ_DONE is shown in Figure 6-1296 and described in Table 6-1303.

Return to the Summary Table.

Figure 6-1296. MSS_CR5B_MBOX_READ_DONE Register

31	30	29	28	27	26	25	24
RESERVED			proc_7	RESERVED			proc_6
R/W-X			R/W-0h	R/W-X			R/W-0h
23	22	21	20	19	18	17	16
RESERVED			proc_5	RESERVED			proc_4
R/W-X			R/W-0h	R/W-X			R/W-0h
15	14	13	12	11	10	9	8
RESERVED			proc_3	RESERVED			proc_2
R/W-X			R/W-0h	R/W-X			R/W-0h
7	6	5	4	3	2	1	0
RESERVED			proc_1	RESERVED			proc_0
R/W-X			R/W-0h	R/W-X			R/W-0h

Table 6-1303. MSS_CR5B_MBOX_READ_DONE Register Field Descriptions

Bit	Field	Type	Reset	Description
31-29	RESERVED	R/W	X	
28	proc_7	R/W	0h	This register should be written once finishing reading from CR5B's mailbox written by proc 7
27-25	RESERVED	R/W	X	
24	proc_6	R/W	0h	This register should be written once finishing reading from CR5B's mailbox written by proc 6
23-21	RESERVED	R/W	X	
20	proc_5	R/W	0h	This register should be written once finishing reading from CR5B's mailbox written by proc 5
19-17	RESERVED	R/W	X	
16	proc_4	R/W	0h	This register should be written once finishing reading from CR5B's mailbox written by proc 4
15-13	RESERVED	R/W	X	
12	proc_3	R/W	0h	This register should be written once finishing reading from CR5B's mailbox written by proc 3
11-9	RESERVED	R/W	X	
8	proc_2	R/W	0h	This register should be written once finishing reading from CR5B's mailbox written by proc 2
7-5	RESERVED	R/W	X	
4	proc_1	R/W	0h	This register should be written once finishing reading from CR5B's mailbox written by proc 1
3-1	RESERVED	R/W	X	

Copyright © 2025 Texas Instruments Incorporated

Table 6-1303. MSS_CR5B_MBOX_READ_DONE Register Field Descriptions (continued)

Bit	Field	Type	Reset	Description
0	proc_0	R/W	0h	This register should be written once finishing reading from CR5B's mailbox written by proc 0

6.2.7.382 MSS_PBIST_KEY_RST Register (Offset = 614h) [reset = X]

MSS_PBIST_KEY_RST is shown in Figure 6-1297 and described in Table 6-1304.

Return to the Summary Table.

Figure 6-1297. MSS_PBIST_KEY_RST Register

31	30	29	28	27	26	25	24	23	22	21	20	19	18	17	16
RESERVED															
R/W-X															
15	14	13	12	11	10	9	8	7	6	5	4	3	2	1	0
RESERVED								pbist_st_rst				pbist_st_key			
R/W-X								R/W-0h				R/W-0h			

Table 6-1304. MSS_PBIST_KEY_RST Register Field Descriptions

Bit	Field	Type	Reset	Description
31-8	RESERVED	R/W	X	
7-4	pbist_st_rst	R/W	0h	MSS PBIST controller will be brought out of reset when value is 0xA
3-0	pbist_st_key	R/W	0h	Top PBIST Selftest Key. Valid value is 0x5

6.2.7.383 MSS_PBIST_REG0 Register (Offset = 618h) [reset = 0h]

MSS_PBIST_REG0 is shown in Figure 6-1298 and described in Table 6-1305.

Return to the Summary Table.

Figure 6-1298. MSS_PBIST_REG0 Register

31	30	29	28	27	26	25	24	23	22	21	20	19	18	17	16	15	14	13	12	11	10	9	8	7	6	5	4	3	2	1	0
pbist_reg																															
R/W-0h																															

Table 6-1305. MSS_PBIST_REG0 Register Field Descriptions

Bit	Field	Type	Reset	Description
31-0	pbist_reg	R/W	0h	

6.2.7.384 MSS_PBIST_REG1 Register (Offset = 61Ch) [reset = 0h]

MSS_PBIST_REG1 is shown in Figure 6-1299 and described in Table 6-1306.

Return to the Summary Table.

Figure 6-1299. MSS_PBIST_REG1 Register

31	30	29	28	27	26	25	24	23	22	21	20	19	18	17	16	15	14	13	12	11	10	9	8	7	6	5	4	3	2	1	0
pbist_reg																															
R/W-0h																															

Copyright © 2025 Texas Instruments Incorporated

Table 6-1306. MSS_PBIST_REG1 Register Field Descriptions

Bit	Field	Type	Reset	Description
31-0	pbist_reg	R/W	0h	

6.2.7.385 MSS_PBIST_REG2 Register (Offset = 620h) [reset = 0h]

MSS_PBIST_REG2 is shown in Figure 6-1300 and described in Table 6-1307.

Return to the Summary Table.

Figure 6-1300. MSS_PBIST_REG2 Register

31	30	29	28	27	26	25	24	23	22	21	20	19	18	17	16	15	14	13	12	11	10	9	8	7	6	5	4	3	2	1	0
pbist_reg																															
R/W-0h																															

Table 6-1307. MSS_PBIST_REG2 Register Field Descriptions

Bit	Field	Type	Reset	Description
31-0	pbist_reg	R/W	0h	

6.2.7.386 MSS_QSPI_CONFIG Register (Offset = 624h) [reset = X]

MSS_QSPI_CONFIG is shown in Figure 6-1301 and described in Table 6-1308.

Return to the Summary Table.

Figure 6-1301. MSS_QSPI_CONFIG Register

31	30	29	28	27	26	25	24
RESERVED							
R/W-X							
23	22	21	20	19	18	17	16
RESERVED							
R/W-X							
15	14	13	12	11	10	9	8
RESERVED					clk_loopback		
R/W-X					R/W-0h		
7	6	5	4	3	2	1	0
RESERVED					ext_clk		
R/W-X					R/W-0h		

Table 6-1308. MSS_QSPI_CONFIG Register Field Descriptions

Bit	Field	Type	Reset	Description
31-11	RESERVED	R/W	X	
10-8	clk_loopback	R/W	0h	Write 3'b111 to take board level loop back clock for QSPI
7-3	RESERVED	R/W	X	
2-0	ext_clk	R/W	0h	Write 3'b111 to external clock as QSPI baud clock source needed for DFT IO char.

6.2.7.387 MSS_STC_CONTROL Register (Offset = 628h) [reset = X]

MSS_STC_CONTROL is shown in Figure 6-1302 and described in Table 6-1309.

Copyright © 2025 Texas Instruments Incorporated

Return to the Summary Table.

Figure 6-1302. MSS_STC_CONTROL Register

31	30	29	28	27	26	25	24
RESERVED							
R/W-X							
23	22	21	20	19	18	17	16
RESERVED							
R/W-X							
15	14	13	12	11	10	9	8
RESERVED							
R/W-X							
7	6	5	4	3	2	1	0
RESERVED						cr5_wfi_overide	
R/W-X						R/W-0h	

Table 6-1309. MSS_STC_CONTROL Register Field Descriptions

Bit	Field	Type	Reset	Description
31-3	RESERVED	R/W	X	
2-0	cr5_wfi_overide	R/W	0h	writing 3'b111 will bypass the wfi signals from R5SS.

6.2.7.388 MSS_CTI_TRIG_SEL Register (Offset = 62Ch) [reset = X]

MSS_CTI_TRIG_SEL is shown in Figure 6-1303 and described in Table 6-1310.

Return to the Summary Table.

Figure 6-1303. MSS_CTI_TRIG_SEL Register

31	30	29	28	27	26	25	24	23	22	21	20	19	18	17	16
RESERVED															
R/W-X															
15	14	13	12	11	10	9	8	7	6	5	4	3	2	1	0
RESERVED								trig8_sel							
R/W-X								R/W-0h							

Table 6-1310. MSS_CTI_TRIG_SEL Register Field Descriptions

Bit	Field	Type	Reset	Description
31-8	RESERVED	R/W	X	
7-0	trig8_sel	R/W	0h	Used for selecting the trigger source for 8th trigger of MSS_CTI

6.2.7.389 MSS_DBGSS_CTI_TRIG_SEL Register (Offset = 630h) [reset = X]

MSS_DBGSS_CTI_TRIG_SEL is shown in Figure 6-1304 and described in Table 6-1311.

Return to the Summary Table.

Figure 6-1304. MSS_DBGSS_CTI_TRIG_SEL Register

31	30	29	28	27	26	25	24	23	22	21	20	19	18	17	16	15	14	13	12	11	10	9	8	7	6	5	4	3	2	1	0
RESERVED								trig3								trig2								trig1							
R/W-X								R/W-0h								R/W-0h								R/W-0h							

Copyright © 2025 Texas Instruments Incorporated

Figure 6-1304. MSS_DBGSS_CTI_TRIG_SEL Register (continued)

Table 6-1311. MSS_DBGSS_CTI_TRIG_SEL Register Field Descriptions

Bit	Field	Type	Reset	Description
31-24	RESERVED	R/W	X	
23-16	trig3	R/W	0h	Used for selecting the trigger source for 3rd trigger of ONE_MCU_CTI
15-8	trig2	R/W	0h	Used for selecting the trigger source for 2nd trigger of ONE_MCU_CTI
7-0	trig1	R/W	0h	Used for selecting the trigger source for 1st trigger of ONE_MCU_CTI

6.2.7.390 MSS_BOOT_INFO_REG0 Register (Offset = 634h) [reset = 0h]

MSS_BOOT_INFO_REG0 is shown in Figure 6-1305 and described in Table 6-1312.

Return to the Summary Table.

Figure 6-1305. MSS_BOOT_INFO_REG0 Register

31	30	29	28	27	26	25	24	23	22	21	20	19	18	17	16	15	14	13	12	11	10	9	8	7	6	5	4	3	2	1	0
config																															
R/W-0h																															

Table 6-1312. MSS_BOOT_INFO_REG0 Register Field Descriptions

Bit	Field	Type	Reset	Description
31-0	config	R/W	0h	Reserved Register for Software use

6.2.7.391 MSS_BOOT_INFO_REG1 Register (Offset = 638h) [reset = 0h]

MSS_BOOT_INFO_REG1 is shown in Figure 6-1306 and described in Table 6-1313.

Return to the Summary Table.

Figure 6-1306. MSS_BOOT_INFO_REG1 Register

31	30	29	28	27	26	25	24	23	22	21	20	19	18	17	16	15	14	13	12	11	10	9	8	7	6	5	4	3	2	1	0
config																															
R/W-0h																															

Table 6-1313. MSS_BOOT_INFO_REG1 Register Field Descriptions

Bit	Field	Type	Reset	Description
31-0	config	R/W	0h	Reserved Register for Software use

6.2.7.392 MSS_BOOT_INFO_REG2 Register (Offset = 63Ch) [reset = 0h]

MSS_BOOT_INFO_REG2 is shown in Figure 6-1307 and described in Table 6-1314.

Return to the Summary Table.

Figure 6-1307. MSS_BOOT_INFO_REG2 Register

31	30	29	28	27	26	25	24	23	22	21	20	19	18	17	16	15	14	13	12	11	10	9	8	7	6	5	4	3	2	1	0
config																															
R/W-0h																															

Copyright © 2025 Texas Instruments Incorporated

Table 6-1314. MSS_BOOT_INFO_REG2 Register Field Descriptions

Bit	Field	Type	Reset	Description
31-0	config	R/W	0h	Reserved Register for Software use

6.2.7.393 MSS_BOOT_INFO_REG3 Register (Offset = 640h) [reset = 0h]

MSS_BOOT_INFO_REG3 is shown in Figure 6-1308 and described in Table 6-1315.

Return to the Summary Table.

Figure 6-1308. MSS_BOOT_INFO_REG3 Register

31	30	29	28	27	26	25	24	23	22	21	20	19	18	17	16	15	14	13	12	11	10	9	8	7	6	5	4	3	2	1	0
config																															
R/W-0h																															

Table 6-1315. MSS_BOOT_INFO_REG3 Register Field Descriptions

Bit	Field	Type	Reset	Description
31-0	config	R/W	0h	Reserved Register for Software use

6.2.7.394 MSS_BOOT_INFO_REG4 Register (Offset = 644h) [reset = 0h]

MSS_BOOT_INFO_REG4 is shown in Figure 6-1309 and described in Table 6-1316.

Return to the Summary Table.

Figure 6-1309. MSS_BOOT_INFO_REG4 Register

31	30	29	28	27	26	25	24	23	22	21	20	19	18	17	16	15	14	13	12	11	10	9	8	7	6	5	4	3	2	1	0
config																															
R/W-0h																															

Table 6-1316. MSS_BOOT_INFO_REG4 Register Field Descriptions

Bit	Field	Type	Reset	Description
31-0	config	R/W	0h	Reserved Register for Software use

6.2.7.395 MSS_BOOT_INFO_REG5 Register (Offset = 648h) [reset = 0h]

MSS_BOOT_INFO_REG5 is shown in Figure 6-1310 and described in Table 6-1317.

Return to the Summary Table.

Figure 6-1310. MSS_BOOT_INFO_REG5 Register

31	30	29	28	27	26	25	24	23	22	21	20	19	18	17	16	15	14	13	12	11	10	9	8	7	6	5	4	3	2	1	0
config																															
R/W-0h																															

Table 6-1317. MSS_BOOT_INFO_REG5 Register Field Descriptions

Bit	Field	Type	Reset	Description
31-0	config	R/W	0h	Reserved Register for Software use

6.2.7.396 MSS_BOOT_INFO_REG6 Register (Offset = 64Ch) [reset = 0h]

MSS_BOOT_INFO_REG6 is shown in Figure 6-1311 and described in Table 6-1318.

Copyright © 2025 Texas Instruments Incorporated

Return to the Summary Table.

Figure 6-1311. MSS_BOOT_INFO_REG6 Register

31	30	29	28	27	26	25	24	23	22	21	20	19	18	17	16	15	14	13	12	11	10	9	8	7	6	5	4	3	2	1	0
config																															
R/W-0h																															

Table 6-1318. MSS_BOOT_INFO_REG6 Register Field Descriptions

Bit	Field	Type	Reset	Description
31-0	config	R/W	0h	Reserved Register for Software use

6.2.7.397 MSS_BOOT_INFO_REG7 Register (Offset = 650h) [reset = 0h]

MSS_BOOT_INFO_REG7 is shown in Figure 6-1312 and described in Table 6-1319.

Return to the Summary Table.

Figure 6-1312. MSS_BOOT_INFO_REG7 Register

31	30	29	28	27	26	25	24	23	22	21	20	19	18	17	16	15	14	13	12	11	10	9	8	7	6	5	4	3	2	1	0
config																															
R/W-0h																															

Table 6-1319. MSS_BOOT_INFO_REG7 Register Field Descriptions

Bit	Field	Type	Reset	Description
31-0	config	R/W	0h	Reserved Register for Software use

6.2.7.398 MSS_TPTC_ECCAGGR_CLK_CNTRL Register (Offset = 654h) [reset = X]

MSS_TPTC_ECCAGGR_CLK_CNTRL is shown in Figure 6-1313 and described in Table 6-1320.

Return to the Summary Table.

Figure 6-1313. MSS_TPTC_ECCAGGR_CLK_CNTRL Register

31	30	29	28	27	26	25	24
RESERVED							
R/W-X							
23	22	21	20	19	18	17	16
RESERVED							
R/W-X							
15	14	13	12	11	10	9	8
RESERVED							
R/W-X							
7	6	5	4	3	2	1	0
RESERVED					tptc_B0	tptc_A1	tptc_A0
R/W-X					R/W-1h	R/W-1h	R/W-1h

Table 6-1320. MSS_TPTC_ECCAGGR_CLK_CNTRL Register Field Descriptions

Bit	Field	Type	Reset	Description
31-3	RESERVED	R/W	X	

Copyright © 2025 Texas Instruments Incorporated

Table 6-1320. MSS_TPTC_ECCAGGR_CLK_CNTRL Register Field Descriptions (continued)

Bit	Field	Type	Reset	Description
2	tptc_B0	R/W	1h	Writing '0' will gate the clock to TPTC_B0-FIFO during ECC-AGGR interaction(fault injection)
1	tptc_A1	R/W	1h	Writing '0' will gate the clock to TPTC_A1-FIFO during ECC-AGGR interaction(fault injection)
0	tptc_A0	R/W	1h	Writing '0' will gate the clock to TPTC_A0-FIFO during ECC-AGGR interaction(fault injection)

6.2.7.399 MSS_PERIPH_ERRAGG_MASK0 Register (Offset = 658h) [reset = X]

MSS_PERIPH_ERRAGG_MASK0 is shown in Figure 6-1314 and described in Table 6-1321.

Return to the Summary Table.

Figure 6-1314. MSS_PERIPH_ERRAGG_MASK0 Register

31	30	29	28	27	26	25	24
RESERVED				top_mdo_wr	top_mdo_rd	rcss_rcm_wr	rcss_rcm_rd
R/W-X				R/W-0h	R/W-0h	R/W-0h	R/W-0h
23	22	21	20	19	18	17	16
rcss_ctrl_wr	rcss_ctrl_rd	hwa_cfg_wr	hwa_cfg_rd	dss_cm4_ctrl_wr	dss_cm4_ctrl_rd	dss_rcm_wr	dss_rcm_rd
R/W-0h	R/W-0h	R/W-0h	R/W-0h	R/W-0h	R/W-0h	R/W-0h	R/W-0h
15	14	13	12	11	10	9	8
dss_ctrl_wr	dss_ctrl_rd	hsm_ctrl_wr	hsm_ctrl_rd	hsm_soc_ctrl_wr	hsm_soc_ctrl_rd	top_aurora_wr	top_aurora_rd
R/W-0h	R/W-0h	R/W-0h	R/W-0h	R/W-0h	R/W-0h	R/W-0h	R/W-0h
7	6	5	4	3	2	1	0
top_rcm_wr	top_rcm_rd	top_ctrl_wr	top_ctrl_rd	mss_rcm_wr	mss_rcm_rd	mss_ctrl_wr	mss_ctrl_rd
R/W-0h	R/W-0h	R/W-0h	R/W-0h	R/W-0h	R/W-0h	R/W-0h	R/W-0h

Table 6-1321. MSS_PERIPH_ERRAGG_MASK0 Register Field Descriptions

Bit	Field	Type	Reset	Description
31-28	RESERVED	R/W	X	
27	top_mdo_wr	R/W	0h	Mask Interrupt from TOP_MDO to aggregated Interrupt MSS_PERIPH_ACCESS_ERRAGG 1 : Interrupt is Masked 0 : Interrupt is Unmasked
26	top_mdo_rd	R/W	0h	Mask Interrupt from TOP_MDO to aggregated Interrupt MSS_PERIPH_ACCESS_ERRAGG 1 : Interrupt is Masked 0 : Interrupt is Unmasked
25	rcss_rcm_wr	R/W	0h	Mask Interrupt from RCSS_RCM to aggregated Interrupt MSS_PERIPH_ACCESS_ERRAGG 1 : Interrupt is Masked 0 : Interrupt is Unmasked
24	rcss_rcm_rd	R/W	0h	Mask Interrupt from RCSS_RCM to aggregated Interrupt MSS_PERIPH_ACCESS_ERRAGG 1 : Interrupt is Masked 0 : Interrupt is Unmasked
23	rcss_ctrl_wr	R/W	0h	Mask Interrupt from RCSS_CTRL to aggregated Interrupt MSS_PERIPH_ACCESS_ERRAGG 1 : Interrupt is Masked 0 : Interrupt is Unmasked
22	rcss_ctrl_rd	R/W	0h	Mask Interrupt from RCSS_CTRL to aggregated Interrupt MSS_PERIPH_ACCESS_ERRAGG 1 : Interrupt is Masked 0 : Interrupt is Unmasked

Copyright © 2025 Texas Instruments Incorporated

Table 6-1321. MSS_PERIPH_ERRAGG_MASK0 Register Field Descriptions (continued)

Bit	Field	Type	Reset	Description
21	hwa_cfg_wr	R/W	0h	Mask Interrupt from HWA_CFG to aggregated Interrupt MSS_PERIPH_ACCESS_ERRAGG 1 : Interrupt is Masked 0 : Interrupt is Unmasked
20	hwa_cfg_rd	R/W	0h	Mask Interrupt from HWA_CFG to aggregated Interrupt MSS_PERIPH_ACCESS_ERRAGG 1 : Interrupt is Masked 0 : Interrupt is Unmasked
19	dss_cm4_ctrl_wr	R/W	0h	Mask Interrupt from DSS_CM4_CTRL to aggregated Interrupt MSS_PERIPH_ACCESS_ERRAGG 1 : Interrupt is Masked 0 : Interrupt is Unmasked
18	dss_cm4_ctrl_rd	R/W	0h	Mask Interrupt from DSS_CM4_CTRL to aggregated Interrupt MSS_PERIPH_ACCESS_ERRAGG 1 : Interrupt is Masked 0 : Interrupt is Unmasked
17	dss_rcm_wr	R/W	0h	Mask Interrupt from DSS_RCM to aggregated Interrupt MSS_PERIPH_ACCESS_ERRAGG 1 : Interrupt is Masked 0 : Interrupt is Unmasked
16	dss_rcm_rd	R/W	0h	Mask Interrupt from DSS_RCM to aggregated Interrupt MSS_PERIPH_ACCESS_ERRAGG 1 : Interrupt is Masked 0 : Interrupt is Unmasked
15	dss_ctrl_wr	R/W	0h	Mask Interrupt from DSS_CTRL to aggregated Interrupt MSS_PERIPH_ACCESS_ERRAGG 1 : Interrupt is Masked 0 : Interrupt is Unmasked
14	dss_ctrl_rd	R/W	0h	Mask Interrupt from DSS_CTRL to aggregated Interrupt MSS_PERIPH_ACCESS_ERRAGG 1 : Interrupt is Masked 0 : Interrupt is Unmasked
13	hsm_ctrl_wr	R/W	0h	Mask Interrupt from HSM_CTRL to aggregated Interrupt MSS_PERIPH_ACCESS_ERRAGG 1 : Interrupt is Masked 0 : Interrupt is Unmasked
12	hsm_ctrl_rd	R/W	0h	Mask Interrupt from HSM_CTRL to aggregated Interrupt MSS_PERIPH_ACCESS_ERRAGG 1 : Interrupt is Masked 0 : Interrupt is Unmasked
11	hsm_soc_ctrl_wr	R/W	0h	Mask Interrupt from HSM_SOC_CTRL to aggregated Interrupt MSS_PERIPH_ACCESS_ERRAGG 1 : Interrupt is Masked 0 : Interrupt is Unmasked
10	hsm_soc_ctrl_rd	R/W	0h	Mask Interrupt from HSM_SOC_CTRL to aggregated Interrupt MSS_PERIPH_ACCESS_ERRAGG 1 : Interrupt is Masked 0 : Interrupt is Unmasked
9	top_aurora_wr	R/W	0h	Mask Interrupt from TOP_AURORA to aggregated Interrupt MSS_PERIPH_ACCESS_ERRAGG 1 : Interrupt is Masked 0 : Interrupt is Unmasked
8	top_aurora_rd	R/W	0h	Mask Interrupt from TOP_AURORA to aggregated Interrupt MSS_PERIPH_ACCESS_ERRAGG 1 : Interrupt is Masked 0 : Interrupt is Unmasked
7	top_rcm_wr	R/W	0h	Mask Interrupt from TOP_RCM to aggregated Interrupt MSS_PERIPH_ACCESS_ERRAGG 1 : Interrupt is Masked 0 : Interrupt is Unmasked
6	top_rcm_rd	R/W	0h	Mask Interrupt from TOP_RCM to aggregated Interrupt MSS_PERIPH_ACCESS_ERRAGG 1 : Interrupt is Masked 0 : Interrupt is Unmasked
5	top_ctrl_wr	R/W	0h	Mask Interrupt from TOP_CTRL to aggregated Interrupt MSS_PERIPH_ACCESS_ERRAGG 1 : Interrupt is Masked 0 : Interrupt is Unmasked
4	top_ctrl_rd	R/W	0h	Mask Interrupt from TOP_CTRL to aggregated Interrupt MSS_PERIPH_ACCESS_ERRAGG 1 : Interrupt is Masked 0 : Interrupt is Unmasked
3	mss_rcm_wr	R/W	0h	Mask Interrupt from MSS_RCM to aggregated Interrupt MSS_PERIPH_ACCESS_ERRAGG 1 : Interrupt is Masked 0 : Interrupt is Unmasked

Copyright © 2025 Texas Instruments Incorporated

Table 6-1321. MSS_PERIPH_ERRAGG_MASK0 Register Field Descriptions (continued)

Bit	Field	Type	Reset	Description
2	mss_rcm_rd	R/W	0h	Mask Interrupt from MSS_RCM to aggregated Interrupt MSS_PERIPH_ACCESS_ERRAGG 1 : Interrupt is Masked 0 : Interrupt is Unmasked
1	mss_ctrl_wr	R/W	0h	Mask Interrupt from MSS_CTRL to aggregated Interrupt MSS_PERIPH_ACCESS_ERRAGG 1 : Interrupt is Masked 0 : Interrupt is Unmasked
0	mss_ctrl_rd	R/W	0h	Mask Interrupt from MSS_CTRL to aggregated Interrupt MSS_PERIPH_ACCESS_ERRAGG 1 : Interrupt is Masked 0 : Interrupt is Unmasked

6.2.7.400 MSS_PERIPH_ERRAGG_STATUS0 Register (Offset = 65Ch) [reset = X]

MSS_PERIPH_ERRAGG_STATUS0 is shown in Figure 6-1315 and described in Table 6-1322.

Return to the Summary Table.

Figure 6-1315. MSS_PERIPH_ERRAGG_STATUS0 Register

31	30	29	28	27	26	25	24
RESERVED				top_mdo_wr	top_mdo_rd	rcss_rcm_wr	rcss_rcm_rd
R/W-X				R/W-0h	R/W-0h	R/W-0h	R/W-0h
23	22	21	20	19	18	17	16
rcss_ctrl_wr	rcss_ctrl_rd	hwa_cfg_wr	hwa_cfg_rd	dss_cm4_ctrl_wr	dss_cm4_ctrl_rd	dss_rcm_wr	dss_rcm_rd
R/W-0h	R/W-0h	R/W-0h	R/W-0h	R/W-0h	R/W-0h	R/W-0h	R/W-0h
15	14	13	12	11	10	9	8
dss_ctrl_wr	dss_ctrl_rd	hsm_ctrl_wr	hsm_ctrl_rd	hsm_soc_ctrl_wr	hsm_soc_ctrl_rd	top_aurora_wr	top_aurora_rd
R/W-0h	R/W-0h	R/W-0h	R/W-0h	R/W-0h	R/W-0h	R/W-0h	R/W-0h
7	6	5	4	3	2	1	0
top_rcm_wr	top_rcm_rd	top_ctrl_wr	top_ctrl_rd	mss_rcm_wr	mss_rcm_rd	mss_ctrl_wr	mss_ctrl_rd
R/W-0h	R/W-0h	R/W-0h	R/W-0h	R/W-0h	R/W-0h	R/W-0h	R/W-0h

Table 6-1322. MSS_PERIPH_ERRAGG_STATUS0 Register Field Descriptions

Bit	Field	Type	Reset	Description
31-28	RESERVED	R/W	X	
27	top_mdo_wr	R/W	0h	Status of Interrupt from TOP_MDO Set only if Interupt is unmasked in MSS_PERIPH_ERRAGG_MASK0 Wrie 0x1 to clear this interrupt.
26	top_mdo_rd	R/W	0h	Status of Interrupt from TOP_MDO Set only if Interupt is unmasked in MSS_PERIPH_ERRAGG_MASK0 Wrie 0x1 to clear this interrupt.
25	rcss_rcm_wr	R/W	0h	Status of Interrupt from RCSS_RCM Set only if Interupt is unmasked in MSS_PERIPH_ERRAGG_MASK0 Wrie 0x1 to clear this interrupt.
24	rcss_rcm_rd	R/W	0h	Status of Interrupt from RCSS_RCM Set only if Interupt is unmasked in MSS_PERIPH_ERRAGG_MASK0 Wrie 0x1 to clear this interrupt.
23	rcss_ctrl_wr	R/W	0h	Status of Interrupt from RCSS_CTRL Set only if Interupt is unmasked in MSS_PERIPH_ERRAGG_MASK0 Wrie 0x1 to clear this interrupt.
22	rcss_ctrl_rd	R/W	0h	Status of Interrupt from RCSS_CTRL Set only if Interupt is unmasked in MSS_PERIPH_ERRAGG_MASK0 Wrie 0x1 to clear this interrupt.
21	hwa_cfg_wr	R/W	0h	Status of Interrupt from HWA_CFG Set only if Interupt is unmasked in MSS_PERIPH_ERRAGG_MASK0 Wrie 0x1 to clear this interrupt.

Copyright © 2025 Texas Instruments Incorporated

Table 6-1322. MSS_PERIPH_ERRAGG_STATUS0 Register Field Descriptions (continued)

Bit	Field	Type	Reset	Description
20	hwa_cfg_rd	R/W	0h	Status of Interrupt from HWA_CFG Set only if Interupt is unmasked in MSS_PERIPH_ERRAGG_MASK0 Wrie 0x1 to clear this interrupt.
19	dss_cm4_ctrl_wr	R/W	0h	Status of Interrupt from DSS_CM4_CTRL Set only if Interupt is unmasked in MSS_PERIPH_ERRAGG_MASK0 Wrie 0x1 to clear this interrupt.
18	dss_cm4_ctrl_rd	R/W	0h	Status of Interrupt from DSS_CM4_CTRL Set only if Interupt is unmasked in MSS_PERIPH_ERRAGG_MASK0 Wrie 0x1 to clear this interrupt.
17	dss_rcm_wr	R/W	0h	Status of Interrupt from DSS_RCM Set only if Interupt is unmasked in MSS_PERIPH_ERRAGG_MASK0 Wrie 0x1 to clear this interrupt.
16	dss_rcm_rd	R/W	0h	Status of Interrupt from DSS_RCM Set only if Interupt is unmasked in MSS_PERIPH_ERRAGG_MASK0 Wrie 0x1 to clear this interrupt.
15	dss_ctrl_wr	R/W	0h	Status of Interrupt from DSS_CTRL Set only if Interupt is unmasked in MSS_PERIPH_ERRAGG_MASK0 Wrie 0x1 to clear this interrupt.
14	dss_ctrl_rd	R/W	0h	Status of Interrupt from DSS_CTRL Set only if Interupt is unmasked in MSS_PERIPH_ERRAGG_MASK0 Wrie 0x1 to clear this interrupt.
13	hsm_ctrl_wr	R/W	0h	Status of Interrupt from HSM_CTRL Set only if Interupt is unmasked in MSS_PERIPH_ERRAGG_MASK0 Wrie 0x1 to clear this interrupt.
12	hsm_ctrl_rd	R/W	0h	Status of Interrupt from HSM_CTRL Set only if Interupt is unmasked in MSS_PERIPH_ERRAGG_MASK0 Wrie 0x1 to clear this interrupt.
11	hsm_soc_ctrl_wr	R/W	0h	Status of Interrupt from HSM_SOC_CTRL Set only if Interupt is unmasked in MSS_PERIPH_ERRAGG_MASK0 Wrie 0x1 to clear this interrupt.
10	hsm_soc_ctrl_rd	R/W	0h	Status of Interrupt from HSM_SOC_CTRL Set only if Interupt is unmasked in MSS_PERIPH_ERRAGG_MASK0 Wrie 0x1 to clear this interrupt.
9	top_aurora_wr	R/W	0h	Status of Interrupt from TOP_AURORA Set only if Interupt is unmasked in MSS_PERIPH_ERRAGG_MASK0 Wrie 0x1 to clear this interrupt.
8	top_aurora_rd	R/W	0h	Status of Interrupt from TOP_AURORA Set only if Interupt is unmasked in MSS_PERIPH_ERRAGG_MASK0 Wrie 0x1 to clear this interrupt.
7	top_rcm_wr	R/W	0h	Status of Interrupt from TOP_RCM Set only if Interupt is unmasked in MSS_PERIPH_ERRAGG_MASK0 Wrie 0x1 to clear this interrupt.
6	top_rcm_rd	R/W	0h	Status of Interrupt from TOP_RCM Set only if Interupt is unmasked in MSS_PERIPH_ERRAGG_MASK0 Wrie 0x1 to clear this interrupt.
5	top_ctrl_wr	R/W	0h	Status of Interrupt from TOP_CTRL Set only if Interupt is unmasked in MSS_PERIPH_ERRAGG_MASK0 Wrie 0x1 to clear this interrupt.
4	top_ctrl_rd	R/W	0h	Status of Interrupt from TOP_CTRL Set only if Interupt is unmasked in MSS_PERIPH_ERRAGG_MASK0 Wrie 0x1 to clear this interrupt.
3	mss_rcm_wr	R/W	0h	Status of Interrupt from MSS_RCM Set only if Interupt is unmasked in MSS_PERIPH_ERRAGG_MASK0 Wrie 0x1 to clear this interrupt.
2	mss_rcm_rd	R/W	0h	Status of Interrupt from MSS_RCM Set only if Interupt is unmasked in MSS_PERIPH_ERRAGG_MASK0 Wrie 0x1 to clear this interrupt.
1	mss_ctrl_wr	R/W	0h	Status of Interrupt from MSS_CTRL Set only if Interupt is unmasked in MSS_PERIPH_ERRAGG_MASK0 Wrie 0x1 to clear this interrupt.
0	mss_ctrl_rd	R/W	0h	Status of Interrupt from MSS_CTRL Set only if Interupt is unmasked in MSS_PERIPH_ERRAGG_MASK0 Wrie 0x1 to clear this interrupt.

6.2.7.401 MSS_PERIPH_ERRAGG_STATUS_RAW0 Register (Offset = 660h) [reset = X]

MSS_PERIPH_ERRAGG_STATUS_RAW0 is shown in Figure 6-1316 and described in Table 6-1323.

Return to the Summary Table.

Copyright © 2025 Texas Instruments Incorporated

Figure 6-1316. MSS_PERIPH_ERRAGG_STATUS_RAW0 Register

31	30	29	28	27	26	25	24
RESERVED				top_mdo_wr	top_mdo_rd	rcss_rcm_wr	rcss_rcm_rd
R/W-X				R/W-0h	R/W-0h	R/W-0h	R/W-0h
23	22	21	20	19	18	17	16
rcss_ctrl_wr	rcss_ctrl_rd	hwa_cfg_wr	hwa_cfg_rd	dss_cm4_ctrl_wr	dss_cm4_ctrl_rd	dss_rcm_wr	dss_rcm_rd
R/W-0h	R/W-0h	R/W-0h	R/W-0h	R/W-0h	R/W-0h	R/W-0h	R/W-0h
15	14	13	12	11	10	9	8
dss_ctrl_wr	dss_ctrl_rd	hsm_ctrl_wr	hsm_ctrl_rd	hsm_soc_ctrl_wr	hsm_soc_ctrl_rd	top_aurora_wr	top_aurora_rd
R/W-0h	R/W-0h	R/W-0h	R/W-0h	R/W-0h	R/W-0h	R/W-0h	R/W-0h
7	6	5	4	3	2	1	0
top_rcm_wr	top_rcm_rd	top_ctrl_wr	top_ctrl_rd	mss_rcm_wr	mss_rcm_rd	mss_ctrl_wr	mss_ctrl_rd
R/W-0h	R/W-0h	R/W-0h	R/W-0h	R/W-0h	R/W-0h	R/W-0h	R/W-0h

Table 6-1323. MSS_PERIPH_ERRAGG_STATUS_RAW0 Register Field Descriptions

Bit	Field	Type	Reset	Description
31-28	RESERVED	R/W	X	
27	top_mdo_wr	R/W	0h	Raw Status of Interrupt from TOP_MDO. Set irrespective if the Interupt is masked or unmasked in MSS_PERIPH_ERRAGG_MASK0
26	top_mdo_rd	R/W	0h	Raw Status of Interrupt from TOP_MDO. Set irrespective if the Interupt is masked or unmasked in MSS_PERIPH_ERRAGG_MASK0
25	rcss_rcm_wr	R/W	0h	Raw Status of Interrupt from RCSS_RCM. Set irrespective if the Interupt is masked or unmasked in MSS_PERIPH_ERRAGG_MASK0
24	rcss_rcm_rd	R/W	0h	Raw Status of Interrupt from RCSS_RCM. Set irrespective if the Interupt is masked or unmasked in MSS_PERIPH_ERRAGG_MASK0
23	rcss_ctrl_wr	R/W	0h	Raw Status of Interrupt from RCSS_CTRL. Set irrespective if the Interupt is masked or unmasked in MSS_PERIPH_ERRAGG_MASK0
22	rcss_ctrl_rd	R/W	0h	Raw Status of Interrupt from RCSS_CTRL. Set irrespective if the Interupt is masked or unmasked in MSS_PERIPH_ERRAGG_MASK0
21	hwa_cfg_wr	R/W	0h	Raw Status of Interrupt from HWA_CFG. Set irrespective if the Interupt is masked or unmasked in MSS_PERIPH_ERRAGG_MASK0
20	hwa_cfg_rd	R/W	0h	Raw Status of Interrupt from HWA_CFG. Set irrespective if the Interupt is masked or unmasked in MSS_PERIPH_ERRAGG_MASK0
19	dss_cm4_ctrl_wr	R/W	0h	Raw Status of Interrupt from DSS_CM4_CTRL. Set irrespective if the Interupt is masked or unmasked in MSS_PERIPH_ERRAGG_MASK0
18	dss_cm4_ctrl_rd	R/W	0h	Raw Status of Interrupt from DSS_CM4_CTRL. Set irrespective if the Interupt is masked or unmasked in MSS_PERIPH_ERRAGG_MASK0
17	dss_rcm_wr	R/W	0h	Raw Status of Interrupt from DSS_RCM. Set irrespective if the Interupt is masked or unmasked in MSS_PERIPH_ERRAGG_MASK0

Copyright © 2025 Texas Instruments Incorporated

Table 6-1323. MSS_PERIPH_ERRAGG_STATUS_RAW0 Register Field Descriptions (continued)

Bit	Field	Type	Reset	Description
16	dss_rcm_rd	R/W	0h	Raw Status of Interrupt from DSS_RCM. Set irrespective if the Interupt is masked or unmasked in MSS_PERIPH_ERRAGG_MASK0
15	dss_ctrl_wr	R/W	0h	Raw Status of Interrupt from DSS_CTRL. Set irrespective if the Interupt is masked or unmasked in MSS_PERIPH_ERRAGG_MASK0
14	dss_ctrl_rd	R/W	0h	Raw Status of Interrupt from DSS_CTRL. Set irrespective if the Interupt is masked or unmasked in MSS_PERIPH_ERRAGG_MASK0
13	hsm_ctrl_wr	R/W	0h	Raw Status of Interrupt from HSM_CTRL. Set irrespective if the Interupt is masked or unmasked in MSS_PERIPH_ERRAGG_MASK0
12	hsm_ctrl_rd	R/W	0h	Raw Status of Interrupt from HSM_CTRL. Set irrespective if the Interupt is masked or unmasked in MSS_PERIPH_ERRAGG_MASK0
11	hsm_soc_ctrl_wr	R/W	0h	Raw Status of Interrupt from HSM_SOC_CTRL. Set irrespective if the Interupt is masked or unmasked in MSS_PERIPH_ERRAGG_MASK0
10	hsm_soc_ctrl_rd	R/W	0h	Raw Status of Interrupt from HSM_SOC_CTRL. Set irrespective if the Interupt is masked or unmasked in MSS_PERIPH_ERRAGG_MASK0
9	top_aurora_wr	R/W	0h	Raw Status of Interrupt from TOP_AURORA. Set irrespective if the Interupt is masked or unmasked in MSS_PERIPH_ERRAGG_MASK0
8	top_aurora_rd	R/W	0h	Raw Status of Interrupt from TOP_AURORA. Set irrespective if the Interupt is masked or unmasked in MSS_PERIPH_ERRAGG_MASK0
7	top_rcm_wr	R/W	0h	Raw Status of Interrupt from TOP_RCM. Set irrespective if the Interupt is masked or unmasked in MSS_PERIPH_ERRAGG_MASK0
6	top_rcm_rd	R/W	0h	Raw Status of Interrupt from TOP_RCM. Set irrespective if the Interupt is masked or unmasked in MSS_PERIPH_ERRAGG_MASK0
5	top_ctrl_wr	R/W	0h	Raw Status of Interrupt from TOP_CTRL. Set irrespective if the Interupt is masked or unmasked in MSS_PERIPH_ERRAGG_MASK0
4	top_ctrl_rd	R/W	0h	Raw Status of Interrupt from TOP_CTRL. Set irrespective if the Interupt is masked or unmasked in MSS_PERIPH_ERRAGG_MASK0
3	mss_rcm_wr	R/W	0h	Raw Status of Interrupt from MSS_RCM. Set irrespective if the Interupt is masked or unmasked in MSS_PERIPH_ERRAGG_MASK0
2	mss_rcm_rd	R/W	0h	Raw Status of Interrupt from MSS_RCM. Set irrespective if the Interupt is masked or unmasked in MSS_PERIPH_ERRAGG_MASK0
1	mss_ctrl_wr	R/W	0h	Raw Status of Interrupt from MSS_CTRL. Set irrespective if the Interupt is masked or unmasked in MSS_PERIPH_ERRAGG_MASK0
0	mss_ctrl_rd	R/W	0h	Raw Status of Interrupt from MSS_CTRL. Set irrespective if the Interupt is masked or unmasked in MSS_PERIPH_ERRAGG_MASK0

6.2.7.402 MSS_PERIPH_ERRAGG_MASK1 Register (Offset = 664h) [reset = X]

MSS_PERIPH_ERRAGG_MASK1 is shown in Figure 6-1317 and described in Table 6-1324.

Copyright © 2025 Texas Instruments Incorporated

Return to the Summary Table.

Figure 6-1317. MSS_PERIPH_ERRAGG_MASK1 Register

31	30	29	28	27	26	25	24
RESERVED							
R/W-X							
23	22	21	20	19	18	17	16
RESERVED							mpu_rd_hsm
R/W-X							R/W-0h
15	14	13	12	11	10	9	8
mpu_rd_dss_mbox	mpu_rd_dss_hwa_proc	mpu_rd_dss_hwa_dma1	mpu_rd_dss_hwa_dma0	mpu_rd_dss_l3_bankd	mpu_rd_dss_l3_bankc	mpu_rd_dss_l3_bankb	mpu_rd_dss_l3_banka
R/W-0h	R/W-0h	R/W-0h	R/W-0h	R/W-0h	R/W-0h	R/W-0h	R/W-0h
7	6	5	4	3	2	1	0
mpu_rd_mss_cr5b_axis	mpu_rd_mss_cr5a_axis	mpu_rd_mss_qspi	mpu_rd_mss_pcra	mpu_rd_mss_mbox	mpu_rd_hsm_dthe	mpu_rd_mss_l2_bankb	mpu_rd_mss_l2_banka
R/W-0h	R/W-0h	R/W-0h	R/W-0h	R/W-0h	R/W-0h	R/W-0h	R/W-0h

Table 6-1324. MSS_PERIPH_ERRAGG_MASK1 Register Field Descriptions

Bit	Field	Type	Reset	Description
31-17	RESERVED	R/W	X	
16	mpu_rd_hsm	R/W	0h	Mask Interrupt from MPU_DSS_HSM to aggregated Interrupt MSS_PERIPH_ACCESS_ERRAGG 1 : Interrupt is Masked 0 : Interrupt is Unmasked
15	mpu_rd_dss_mbox	R/W	0h	Mask Interrupt from MPU_DSS_MBOX to aggregated Interrupt MSS_PERIPH_ACCESS_ERRAGG 1 : Interrupt is Masked 0 : Interrupt is Unmasked
14	mpu_rd_dss_hwa_proc	R/W	0h	Mask Interrupt from MPU_DSS_HWA_PROC to aggregated Interrupt MSS_PERIPH_ACCESS_ERRAGG 1 : Interrupt is Masked 0 : Interrupt is Unmasked
13	mpu_rd_dss_hwa_dma1	R/W	0h	Mask Interrupt from MPU_DSS_HWA_DMA1 to aggregated Interrupt MSS_PERIPH_ACCESS_ERRAGG 1 : Interrupt is Masked 0 : Interrupt is Unmasked
12	mpu_rd_dss_hwa_dma0	R/W	0h	Mask Interrupt from MPU_DSS_HWA_DMA0 to aggregated Interrupt MSS_PERIPH_ACCESS_ERRAGG 1 : Interrupt is Masked 0 : Interrupt is Unmasked
11	mpu_rd_dss_l3_bankd	R/W	0h	Mask Interrupt from MPU_DSS_L3_BANKD to aggregated Interrupt MSS_PERIPH_ACCESS_ERRAGG 1 : Interrupt is Masked 0 : Interrupt is Unmasked
10	mpu_rd_dss_l3_bankc	R/W	0h	Mask Interrupt from MPU_DSS_L3_BANKC to aggregated Interrupt MSS_PERIPH_ACCESS_ERRAGG 1 : Interrupt is Masked 0 : Interrupt is Unmasked
9	mpu_rd_dss_l3_bankb	R/W	0h	Mask Interrupt from MPU_DSS_L3_BANKB to aggregated Interrupt MSS_PERIPH_ACCESS_ERRAGG 1 : Interrupt is Masked 0 : Interrupt is Unmasked
8	mpu_rd_dss_l3_banka	R/W	0h	Mask Interrupt from MPU_DSS_L3_BANKA to aggregated Interrupt MSS_PERIPH_ACCESS_ERRAGG 1 : Interrupt is Masked 0 : Interrupt is Unmasked
7	mpu_rd_mss_cr5b_axis	R/W	0h	Mask Interrupt from MPU_MSS_CR5B_AXIS to aggregated Interrupt MSS_PERIPH_ACCESS_ERRAGG 1 : Interrupt is Masked 0 : Interrupt is Unmasked
6	mpu_rd_mss_cr5a_axis	R/W	0h	Mask Interrupt from MPU_MSS_CR5A_AXIS to aggregated Interrupt MSS_PERIPH_ACCESS_ERRAGG 1 : Interrupt is Masked 0 : Interrupt is Unmasked

Copyright © 2025 Texas Instruments Incorporated

Table 6-1324. MSS_PERIPH_ERRAGG_MASK1 Register Field Descriptions (continued)

Bit	Field	Type	Reset	Description
5	mpu_rd_mss_qspi	R/W	0h	Mask Interrupt from MPU_MSS_QSPI to aggregated Interrupt MSS_PERIPH_ACCESS_ERRAGG 1 : Interrupt is Masked 0 : Interrupt is Unmasked
4	mpu_rd_mss_pcra	R/W	0h	Mask Interrupt from MPU_MSS_PCRA to aggregated Interrupt MSS_PERIPH_ACCESS_ERRAGG 1 : Interrupt is Masked 0 : Interrupt is Unmasked
3	mpu_rd_mss_mbox	R/W	0h	Mask Interrupt from MPU_MSS_MBOX to aggregated Interrupt MSS_PERIPH_ACCESS_ERRAGG 1 : Interrupt is Masked 0 : Interrupt is Unmasked
2	mpu_rd_hsm_dthe	R/W	0h	Mask Interrupt from MPU_HSM_DTHE to aggregated Interrupt MSS_PERIPH_ACCESS_ERRAGG 1 : Interrupt is Masked 0 : Interrupt is Unmasked
1	mpu_rd_mss_l2_bankb	R/W	0h	Mask Interrupt from MPU_MSS_L2_BANKB to aggregated Interrupt MSS_PERIPH_ACCESS_ERRAGG 1 : Interrupt is Masked 0 : Interrupt is Unmasked
0	mpu_rd_mss_l2_banka	R/W	0h	Mask Interrupt from MPU_MSS_L2_BANKA to aggregated Interrupt MSS_PERIPH_ACCESS_ERRAGG 1 : Interrupt is Masked 0 : Interrupt is Unmasked

6.2.7.403 MSS_PERIPH_ERRAGG_STATUS1 Register (Offset = 668h) [reset = X]

MSS_PERIPH_ERRAGG_STATUS1 is shown in Figure 6-1318 and described in Table 6-1325.

Return to the Summary Table.

Figure 6-1318. MSS_PERIPH_ERRAGG_STATUS1 Register

31	30	29	28	27	26	25	24
RESERVED							
R/W-X							
23	22	21	20	19	18	17	16
RESERVED							mpu_rd_hsm
R/W-X							R/W-0h
15	14	13	12	11	10	9	8
mpu_rd_dss_mbox	mpu_rd_dss_hwa_proc	mpu_rd_dss_hwa_dma1	mpu_rd_dss_hwa_dma0	mpu_rd_dss_l3_bankd	mpu_rd_dss_l3_bankc	mpu_rd_dss_l3_bankb	mpu_rd_dss_l3_banka
R/W-0h	R/W-0h	R/W-0h	R/W-0h	R/W-0h	R/W-0h	R/W-0h	R/W-0h
7	6	5	4	3	2	1	0
mpu_rd_mss_cr5b_axis	mpu_rd_mss_cr5a_axis	mpu_rd_mss_qspi	mpu_rd_mss_pcra	mpu_rd_mss_mbox	mpu_rd_hsm_dthe	mpu_rd_mss_l2_bankb	mpu_rd_mss_l2_banka
R/W-0h	R/W-0h	R/W-0h	R/W-0h	R/W-0h	R/W-0h	R/W-0h	R/W-0h

Table 6-1325. MSS_PERIPH_ERRAGG_STATUS1 Register Field Descriptions

Bit	Field	Type	Reset	Description
31-17	RESERVED	R/W	X	
16	mpu_rd_hsm	R/W	0h	Status of Interrupt from MPU_HSM Set only if Interupt is unmasked in MSS_PERIPH_ERRAGG_MASK1 Wrie 0x1 to clear this interrupt.
15	mpu_rd_dss_mbox	R/W	0h	Status of Interrupt from MPU_DSS_MBOX Set only if Interupt is unmasked in MSS_PERIPH_ERRAGG_MASK1 Wrie 0x1 to clear this interrupt.
14	mpu_rd_dss_hwa_proc	R/W	0h	Status of Interrupt from MPU_DSS_HWA_PROC Set only if Interupt is unmasked in MSS_PERIPH_ERRAGG_MASK1 Wrie 0x1 to clear this interrupt.

Copyright © 2025 Texas Instruments Incorporated

Table 6-1325. MSS_PERIPH_ERRAGG_STATUS1 Register Field Descriptions (continued)

Bit	Field	Type	Reset	Description
13	mpu_rd_dss_hwa_dma1	R/W	0h	Status of Interrupt from MPU_DSS_HWA_DMA1 Set only if Interupt is unmasked in MSS_PERIPH_ERRAGG_MASK1 Wrie 0x1 to clear this interrupt.
12	mpu_rd_dss_hwa_dma0	R/W	0h	Status of Interrupt from MPU_DSS_HWA_DMA0 Set only if Interupt is unmasked in MSS_PERIPH_ERRAGG_MASK1 Wrie 0x1 to clear this interrupt.
11	mpu_rd_dss_l3_bankd	R/W	0h	Status of Interrupt from MPU_DSS_L3_BANKD Set only if Interupt is unmasked in MSS_PERIPH_ERRAGG_MASK1 Wrie 0x1 to clear this interrupt.
10	mpu_rd_dss_l3_bankc	R/W	0h	Status of Interrupt from MPU_DSS_L3_BANKC Set only if Interupt is unmasked in MSS_PERIPH_ERRAGG_MASK1 Wrie 0x1 to clear this interrupt.
9	mpu_rd_dss_l3_bankb	R/W	0h	Status of Interrupt from MPU_DSS_L3_BANKB Set only if Interupt is unmasked in MSS_PERIPH_ERRAGG_MASK1 Wrie 0x1 to clear this interrupt.
8	mpu_rd_dss_l3_banka	R/W	0h	Status of Interrupt from MPU_DSS_L3_BANKA Set only if Interupt is unmasked in MSS_PERIPH_ERRAGG_MASK1 Wrie 0x1 to clear this interrupt.
7	mpu_rd_mss_cr5b_axis	R/W	0h	Status of Interrupt from MPU_MSS_CR5B_AXIS Set only if Interupt is unmasked in MSS_PERIPH_ERRAGG_MASK1 Wrie 0x1 to clear this interrupt.
6	mpu_rd_mss_cr5a_axis	R/W	0h	Status of Interrupt from MPU_MSS_CR5A_AXIS Set only if Interupt is unmasked in MSS_PERIPH_ERRAGG_MASK1 Wrie 0x1 to clear this interrupt.
5	mpu_rd_mss_qspi	R/W	0h	Status of Interrupt from MPU_MSS_QSPI Set only if Interupt is unmasked in MSS_PERIPH_ERRAGG_MASK1 Wrie 0x1 to clear this interrupt.
4	mpu_rd_mss_pcra	R/W	0h	Status of Interrupt from MPU_MSS_PCRA Set only if Interupt is unmasked in MSS_PERIPH_ERRAGG_MASK1 Wrie 0x1 to clear this interrupt.
3	mpu_rd_mss_mbox	R/W	0h	Status of Interrupt from MPU_MSS_MBOX Set only if Interupt is unmasked in MSS_PERIPH_ERRAGG_MASK1 Wrie 0x1 to clear this interrupt.
2	mpu_rd_hsm_dthe	R/W	0h	Status of Interrupt from MPU_HSM_DTHE Set only if Interupt is unmasked in MSS_PERIPH_ERRAGG_MASK1 Wrie 0x1 to clear this interrupt.
1	mpu_rd_mss_l2_bankb	R/W	0h	Status of Interrupt from MPU_MSS_L2_BANKB Set only if Interupt is unmasked in MSS_PERIPH_ERRAGG_MASK1 Wrie 0x1 to clear this interrupt.
0	mpu_rd_mss_l2_banka	R/W	0h	Status of Interrupt from MPU_MSS_L2_BANKA Set only if Interupt is unmasked in MSS_PERIPH_ERRAGG_MASK1 Wrie 0x1 to clear this interrupt.

6.2.7.404 MSS_PERIPH_ERRAGG_STATUS_RAW1 Register (Offset = 66Ch) [reset = X]

MSS_PERIPH_ERRAGG_STATUS_RAW1 is shown in Figure 6-1319 and described in Table 6-1326.

Return to the Summary Table.

Figure 6-1319. MSS_PERIPH_ERRAGG_STATUS_RAW1 Register

31	30	29	28	27	26	25	24
RESERVED							
R/W-X							
23	22	21	20	19	18	17	16
RESERVED							mpu_rd_hsm

Copyright © 2025 Texas Instruments Incorporated

Figure 6-1319. MSS_PERIPH_ERRAGG_STATUS_RAW1 Register (continued)

R/W-X							R/W-0h
15	14	13	12	11	10	9	8
mpu_rd_dss_mbox	mpu_rd_dss_hwa_proc	mpu_rd_dss_hwa_dma1	mpu_rd_dss_hwa_dma0	mpu_rd_dss_l3_bankd	mpu_rd_dss_l3_bankc	mpu_rd_dss_l3_bankb	mpu_rd_dss_l3_banka
R/W-0h	R/W-0h	R/W-0h	R/W-0h	R/W-0h	R/W-0h	R/W-0h	R/W-0h
7	6	5	4	3	2	1	0
mpu_rd_mss_cr5b_axis	mpu_rd_mss_cr5a_axis	mpu_rd_mss_qspi	mpu_rd_mss_pcra	mpu_rd_mss_mbox	mpu_rd_hsm_dthe	mpu_rd_mss_l2_bankb	mpu_rd_mss_l2_banka
R/W-0h	R/W-0h	R/W-0h	R/W-0h	R/W-0h	R/W-0h	R/W-0h	R/W-0h

Table 6-1326. MSS_PERIPH_ERRAGG_STATUS_RAW1 Register Field Descriptions

Bit	Field	Type	Reset	Description
31-17	RESERVED	R/W	X	
16	mpu_rd_hsm	R/W	0h	Raw Status of Interrupt from MPU_HSM. Set irrespective if the Interupt is masked or unmasked in MSS_PERIPH_ERRAGG_MASK1
15	mpu_rd_dss_mbox	R/W	0h	Raw Status of Interrupt from MPU_DSS_MBOX. Set irrespective if the Interupt is masked or unmasked in MSS_PERIPH_ERRAGG_MASK1
14	mpu_rd_dss_hwa_proc	R/W	0h	Raw Status of Interrupt from MPU_DSS_HWA_PROC. Set irrespective if the Interupt is masked or unmasked in MSS_PERIPH_ERRAGG_MASK1
13	mpu_rd_dss_hwa_dma1	R/W	0h	Raw Status of Interrupt from MPU_DSS_HWA_DMA1. Set irrespective if the Interupt is masked or unmasked in MSS_PERIPH_ERRAGG_MASK1
12	mpu_rd_dss_hwa_dma0	R/W	0h	Raw Status of Interrupt from MPU_DSS_HWA_DMA0. Set irrespective if the Interupt is masked or unmasked in MSS_PERIPH_ERRAGG_MASK1
11	mpu_rd_dss_l3_bankd	R/W	0h	Raw Status of Interrupt from MPU_DSS_L3_BANKD. Set irrespective if the Interupt is masked or unmasked in MSS_PERIPH_ERRAGG_MASK1
10	mpu_rd_dss_l3_bankc	R/W	0h	Raw Status of Interrupt from MPU_DSS_L3_BANKC. Set irrespective if the Interupt is masked or unmasked in MSS_PERIPH_ERRAGG_MASK1
9	mpu_rd_dss_l3_bankb	R/W	0h	Raw Status of Interrupt from MPU_DSS_L3_BANKB. Set irrespective if the Interupt is masked or unmasked in MSS_PERIPH_ERRAGG_MASK1
8	mpu_rd_dss_l3_banka	R/W	0h	Raw Status of Interrupt from MPU_DSS_L3_BANKA. Set irrespective if the Interupt is masked or unmasked in MSS_PERIPH_ERRAGG_MASK1
7	mpu_rd_mss_cr5b_axis	R/W	0h	Raw Status of Interrupt from MPU_MSS_CR5B_AXIS. Set irrespective if the Interupt is masked or unmasked in MSS_PERIPH_ERRAGG_MASK1
6	mpu_rd_mss_cr5a_axis	R/W	0h	Raw Status of Interrupt from MPU_MSS_CR5A_AXIS. Set irrespective if the Interupt is masked or unmasked in MSS_PERIPH_ERRAGG_MASK1
5	mpu_rd_mss_qspi	R/W	0h	Raw Status of Interrupt from MPU_MSS_QSPI. Set irrespective if the Interupt is masked or unmasked in MSS_PERIPH_ERRAGG_MASK1
4	mpu_rd_mss_pcra	R/W	0h	Raw Status of Interrupt from MPU_MSS_PCRA. Set irrespective if the Interupt is masked or unmasked in MSS_PERIPH_ERRAGG_MASK1
3	mpu_rd_mss_mbox	R/W	0h	Raw Status of Interrupt from MPU_MSS_MBOX. Set irrespective if the Interupt is masked or unmasked in MSS_PERIPH_ERRAGG_MASK1

Copyright © 2025 Texas Instruments Incorporated

Table 6-1326. MSS_PERIPH_ERRAGG_STATUS_RAW1 Register Field Descriptions (continued)

Bit	Field	Type	Reset	Description
2	mpu_rd_hsm_dthe	R/W	0h	Raw Status of Interrupt from MPU_HSM_DTHE. Set irrespective if the Interupt is masked or unmasked in MSS_PERIPH_ERRAGG_MASK1
1	mpu_rd_mss_l2_bankb	R/W	0h	Raw Status of Interrupt from MPU_MSS_L2_BANKB. Set irrespective if the Interupt is masked or unmasked in MSS_PERIPH_ERRAGG_MASK1
0	mpu_rd_mss_l2_banka	R/W	0h	Raw Status of Interrupt from MPU_MSS_L2_BANKA. Set irrespective if the Interupt is masked or unmasked in MSS_PERIPH_ERRAGG_MASK1

6.2.7.405 MSS_DMM_EVENT0_REG Register (Offset = 670h) [reset = X]

MSS_DMM_EVENT0_REG is shown in Figure 6-1320 and described in Table 6-1327.

Return to the Summary Table.

Figure 6-1320. MSS_DMM_EVENT0_REG Register

31	30	29	28	27	26	25	24
RESERVED			event_sel3	RESERVED			event_trig3
R/W-X			R/W-0h	R/W-X			R/W-0h
23	22	21	20	19	18	17	16
RESERVED			event_sel2	RESERVED			event_trig2
R/W-X			R/W-0h	R/W-X			R/W-0h
15	14	13	12	11	10	9	8
RESERVED			event_sel1	RESERVED			event_trig1
R/W-X			R/W-0h	R/W-X			R/W-0h
7	6	5	4	3	2	1	0
RESERVED			event_sel0	RESERVED			event_trig0
R/W-X			R/W-0h	R/W-X			R/W-0h

Table 6-1327. MSS_DMM_EVENT0_REG Register Field Descriptions

Bit	Field	Type	Reset	Description
31-29	RESERVED	R/W	X	
28	event_sel3	R/W	0h	Writing 1'b1 : Selects DMM event_trig as interrupt source. 1'b0 : Selects actual interrupt as interrupt source.
27-25	RESERVED	R/W	X	
24	event_trig3	R/W	0h	DMM trigger for RCSS_CSI2A_SOF_INT0
23-21	RESERVED	R/W	X	
20	event_sel2	R/W	0h	Writing 1'b1 : Selects DMM event_trig as interrupt source. 1'b0 : Selects actual interrupt as interrupt source.
19-17	RESERVED	R/W	X	
16	event_trig2	R/W	0h	DMM trigger for RCSS_CSI2A_SOF_INT0
15-13	RESERVED	R/W	X	
12	event_sel1	R/W	0h	Writing 1'b1 : Selects DMM event_trig as interrupt source. 1'b0 : Selects actual interrupt as interrupt source.
11-9	RESERVED	R/W	X	
8	event_trig1	R/W	0h	DMM trigger for RCSS_CSI2A_SOF_INT0
7-5	RESERVED	R/W	X	

Copyright © 2025 Texas Instruments Incorporated

Table 6-1327. MSS_DMM_EVENT0_REG Register Field Descriptions (continued)

Bit	Field	Type	Reset	Description
4	event_sel0	R/W	0h	Writing 1'b1 : Selects DMM event_trig as interrupt source. 1'b0 : Selects actual interrupt as interrupt source.
3-1	RESERVED	R/W	X	
0	event_trig0	R/W	0h	DMM trigger for RCSS_CSI2A_SOF_INT0

6.2.7.406 MSS_DMM_EVENT1_REG Register (Offset = 674h) [reset = X]

MSS_DMM_EVENT1_REG is shown in Figure 6-1321 and described in Table 6-1328.

Return to the Summary Table.

Figure 6-1321. MSS_DMM_EVENT1_REG Register

31	30	29	28	27	26	25	24
RESERVED			event_sel7	RESERVED			event_trig7
R/W-X			R/W-0h	R/W-X			R/W-0h
23	22	21	20	19	18	17	16
RESERVED			event_sel6	RESERVED			event_trig6
R/W-X			R/W-0h	R/W-X			R/W-0h
15	14	13	12	11	10	9	8
RESERVED			event_sel5	RESERVED			event_trig5
R/W-X			R/W-0h	R/W-X			R/W-0h
7	6	5	4	3	2	1	0
RESERVED			event_sel4	RESERVED			event_trig4
R/W-X			R/W-0h	R/W-X			R/W-0h

Table 6-1328. MSS_DMM_EVENT1_REG Register Field Descriptions

Bit	Field	Type	Reset	Description
31-29	RESERVED	R/W	X	
28	event_sel7	R/W	0h	Writing 1'b1 : Selects DMM event_trig as interrupt source. 1'b0 : Selects actual interrupt as interrupt source.
27-25	RESERVED	R/W	X	
24	event_trig7	R/W	0h	DMM trigger for RCSS_CSI2A_SOF_INT1
23-21	RESERVED	R/W	X	
20	event_sel6	R/W	0h	Writing 1'b1 : Selects DMM event_trig as interrupt source. 1'b0 : Selects actual interrupt as interrupt source.
19-17	RESERVED	R/W	X	
16	event_trig6	R/W	0h	DMM trigger for RCSS_CSI2A_SOF_INT1
15-13	RESERVED	R/W	X	
12	event_sel5	R/W	0h	Writing 1'b1 : Selects DMM event_trig as interrupt source. 1'b0 : Selects actual interrupt as interrupt source.
11-9	RESERVED	R/W	X	
8	event_trig5	R/W	0h	DMM trigger for RCSS_CSI2A_SOF_INT1
7-5	RESERVED	R/W	X	
4	event_sel4	R/W	0h	Writing 1'b1 : Selects DMM event_trig as interrupt source. 1'b0 : Selects actual interrupt as interrupt source.
3-1	RESERVED	R/W	X	
0	event_trig4	R/W	0h	DMM trigger for RCSS_CSI2A_SOF_INT0

Copyright © 2025 Texas Instruments Incorporated

6.2.7.407 MSS_DMM_EVENT2_REG Register (Offset = 678h) [reset = X]

MSS_DMM_EVENT2_REG is shown in Figure 6-1322 and described in Table 6-1329.

Return to the Summary Table.

Figure 6-1322. MSS_DMM_EVENT2_REG Register

31	30	29	28	27	26	25	24
RESERVED			event_sel11	RESERVED			event_trig11
R/W-X			R/W-0h	R/W-X			R/W-0h
23	22	21	20	19	18	17	16
RESERVED			event_sel10	RESERVED			event_trig10
R/W-X			R/W-0h	R/W-X			R/W-0h
15	14	13	12	11	10	9	8
RESERVED			event_sel9	RESERVED			event_trig9
R/W-X			R/W-0h	R/W-X			R/W-0h
7	6	5	4	3	2	1	0
RESERVED			event_sel8	RESERVED			event_trig8
R/W-X			R/W-0h	R/W-X			R/W-0h

Table 6-1329. MSS_DMM_EVENT2_REG Register Field Descriptions

Bit	Field	Type	Reset	Description
31-29	RESERVED	R/W	X	
28	event_sel11	R/W	0h	Writing 1'b1 : Selects DMM event_trig as interrupt source. 1'b0 : Selects actual interrupt as interrupt source.
27-25	RESERVED	R/W	X	
24	event_trig11	R/W	0h	DMM trigger for RCSS_CSI2A_EOL_CNTX0_INT
23-21	RESERVED	R/W	X	
20	event_sel10	R/W	0h	Writing 1'b1 : Selects DMM event_trig as interrupt source. 1'b0 : Selects actual interrupt as interrupt source.
19-17	RESERVED	R/W	X	
16	event_trig10	R/W	0h	DMM trigger for RCSS_CSI2A_EOL_CNTX0_INT
15-13	RESERVED	R/W	X	
12	event_sel9	R/W	0h	Writing 1'b1 : Selects DMM event_trig as interrupt source. 1'b0 : Selects actual interrupt as interrupt source.
11-9	RESERVED	R/W	X	
8	event_trig9	R/W	0h	DMM trigger for RCSS_CSI2A_EOL_CNTX0_INT
7-5	RESERVED	R/W	X	
4	event_sel8	R/W	0h	Writing 1'b1 : Selects DMM event_trig as interrupt source. 1'b0 : Selects actual interrupt as interrupt source.
3-1	RESERVED	R/W	X	
0	event_trig8	R/W	0h	DMM trigger for RCSS_CSI2A_EOL_CNTX0_INT

6.2.7.408 MSS_DMM_EVENT3_REG Register (Offset = 67Ch) [reset = X]

MSS_DMM_EVENT3_REG is shown in Figure 6-1323 and described in Table 6-1330.

Return to the Summary Table.

Figure 6-1323. MSS_DMM_EVENT3_REG Register

31	30	29	28	27	26	25	24

Copyright © 2025 Texas Instruments Incorporated

Figure 6-1323. MSS_DMM_EVENT3_REG Register (continued)

RESERVED			event_sel15	RESERVED			event_trig15
R/W-X			R/W-0h	R/W-X			R/W-0h
23	22	21	20	19	18	17	16
RESERVED			event_sel14	RESERVED			event_trig14
R/W-X			R/W-0h	R/W-X			R/W-0h
15	14	13	12	11	10	9	8
RESERVED			event_sel13	RESERVED			event_trig13
R/W-X			R/W-0h	R/W-X			R/W-0h
7	6	5	4	3	2	1	0
RESERVED			event_sel12	RESERVED			event_trig12
R/W-X			R/W-0h	R/W-X			R/W-0h

Table 6-1330. MSS_DMM_EVENT3_REG Register Field Descriptions

Bit	Field	Type	Reset	Description
31-29	RESERVED	R/W	X	
28	event_sel15	R/W	0h	Writing 1'b1 : Selects DMM event_trig as interrupt source. 1'b0 : Selects actual interrupt as interrupt source.
27-25	RESERVED	R/W	X	
24	event_trig15	R/W	0h	DMM trigger for RCSS_CSI2A_EOL_CNTX1_INT
23-21	RESERVED	R/W	X	
20	event_sel14	R/W	0h	Writing 1'b1 : Selects DMM event_trig as interrupt source. 1'b0 : Selects actual interrupt as interrupt source.
19-17	RESERVED	R/W	X	
16	event_trig14	R/W	0h	DMM trigger for RCSS_CSI2A_EOL_CNTX1_INT
15-13	RESERVED	R/W	X	
12	event_sel13	R/W	0h	Writing 1'b1 : Selects DMM event_trig as interrupt source. 1'b0 : Selects actual interrupt as interrupt source.
11-9	RESERVED	R/W	X	
8	event_trig13	R/W	0h	DMM trigger for RCSS_CSI2A_EOL_CNTX1_INT
7-5	RESERVED	R/W	X	
4	event_sel12	R/W	0h	Writing 1'b1 : Selects DMM event_trig as interrupt source. 1'b0 : Selects actual interrupt as interrupt source.
3-1	RESERVED	R/W	X	
0	event_trig12	R/W	0h	DMM trigger for RCSS_CSI2A_EOL_CNTX1_INT

6.2.7.409 MSS_DMM_EVENT4_REG Register (Offset = 680h) [reset = X]

MSS_DMM_EVENT4_REG is shown in Figure 6-1324 and described in Table 6-1331.

Return to the Summary Table.

Figure 6-1324. MSS_DMM_EVENT4_REG Register

31	30	29	28	27	26	25	24
RESERVED			event_sel19	RESERVED			event_trig19
R/W-X			R/W-0h	R/W-X			R/W-0h
23	22	21	20	19	18	17	16
RESERVED			event_sel18	RESERVED			event_trig18
R/W-X			R/W-0h	R/W-X			R/W-0h

Copyright © 2025 Texas Instruments Incorporated

Figure 6-1324. MSS_DMM_EVENT4_REG Register (continued)

15	14	13	12	11	10	9	8
RESERVED			event_sel17	RESERVED			event_trig17
R/W-X			R/W-0h	R/W-X			R/W-0h
7	6	5	4	3	2	1	0
RESERVED			event_sel16	RESERVED			event_trig16
R/W-X			R/W-0h	R/W-X			R/W-0h

Table 6-1331. MSS_DMM_EVENT4_REG Register Field Descriptions

Bit	Field	Type	Reset	Description
31-29	RESERVED	R/W	X	
28	event_sel19	R/W	0h	Writing 1'b1 : Selects DMM event_trig as interrupt source. 1'b0 : Selects actual interrupt as interrupt source.
27-25	RESERVED	R/W	X	
24	event_trig19	R/W	0h	DMM trigger for RCSS_CSI2A_EOL_CNTX2_INT
23-21	RESERVED	R/W	X	
20	event_sel18	R/W	0h	Writing 1'b1 : Selects DMM event_trig as interrupt source. 1'b0 : Selects actual interrupt as interrupt source.
19-17	RESERVED	R/W	X	
16	event_trig18	R/W	0h	DMM trigger for RCSS_CSI2A_EOL_CNTX2_INT
15-13	RESERVED	R/W	X	
12	event_sel17	R/W	0h	Writing 1'b1 : Selects DMM event_trig as interrupt source. 1'b0 : Selects actual interrupt as interrupt source.
11-9	RESERVED	R/W	X	
8	event_trig17	R/W	0h	DMM trigger for RCSS_CSI2A_EOL_CNTX2_INT
7-5	RESERVED	R/W	X	
4	event_sel16	R/W	0h	Writing 1'b1 : Selects DMM event_trig as interrupt source. 1'b0 : Selects actual interrupt as interrupt source.
3-1	RESERVED	R/W	X	
0	event_trig16	R/W	0h	DMM trigger for RCSS_CSI2A_EOL_CNTX2_INT

6.2.7.410 MSS_DMM_EVENT5_REG Register (Offset = 684h) [reset = X]

MSS_DMM_EVENT5_REG is shown in Figure 6-1325 and described in Table 6-1332.

Return to the Summary Table.

Figure 6-1325. MSS_DMM_EVENT5_REG Register

31	30	29	28	27	26	25	24
RESERVED			event_sel23	RESERVED			event_trig23
R/W-X			R/W-0h	R/W-X			R/W-0h
23	22	21	20	19	18	17	16
RESERVED			event_sel22	RESERVED			event_trig22
R/W-X			R/W-0h	R/W-X			R/W-0h
15	14	13	12	11	10	9	8
RESERVED			event_sel21	RESERVED			event_trig21
R/W-X			R/W-0h	R/W-X			R/W-0h
7	6	5	4	3	2	1	0
RESERVED			event_sel20	RESERVED			event_trig20

Copyright © 2025 Texas Instruments Incorporated

Figure 6-1325. MSS_DMM_EVENT5_REG Register (continued)

R/W-X	R/W-0h	R/W-X	R/W-0h

Table 6-1332. MSS_DMM_EVENT5_REG Register Field Descriptions

Bit	Field	Type	Reset	Description
31-29	RESERVED	R/W	X	
28	event_sel23	R/W	0h	Writing 1'b1 : Selects DMM event_trig as interrupt source. 1'b0 : Selects actual interrupt as interrupt source.
27-25	RESERVED	R/W	X	
24	event_trig23	R/W	0h	DMM trigger for RCSS_CSI2A_EOL_CNTX3_INT
23-21	RESERVED	R/W	X	
20	event_sel22	R/W	0h	Writing 1'b1 : Selects DMM event_trig as interrupt source. 1'b0 : Selects actual interrupt as interrupt source.
19-17	RESERVED	R/W	X	
16	event_trig22	R/W	0h	DMM trigger for RCSS_CSI2A_EOL_CNTX3_INT
15-13	RESERVED	R/W	X	
12	event_sel21	R/W	0h	Writing 1'b1 : Selects DMM event_trig as interrupt source. 1'b0 : Selects actual interrupt as interrupt source.
11-9	RESERVED	R/W	X	
8	event_trig21	R/W	0h	DMM trigger for RCSS_CSI2A_EOL_CNTX3_INT
7-5	RESERVED	R/W	X	
4	event_sel20	R/W	0h	Writing 1'b1 : Selects DMM event_trig as interrupt source. 1'b0 : Selects actual interrupt as interrupt source.
3-1	RESERVED	R/W	X	
0	event_trig20	R/W	0h	DMM trigger for RCSS_CSI2A_EOL_CNTX3_INT

6.2.7.411 MSS_DMM_EVENT6_REG Register (Offset = 688h) [reset = X]

MSS_DMM_EVENT6_REG is shown in Figure 6-1326 and described in Table 6-1333.

Return to the Summary Table.

Figure 6-1326. MSS_DMM_EVENT6_REG Register

31	30	29	28	27	26	25	24
RESERVED			event_sel27	RESERVED			event_trig27
R/W-X			R/W-0h	R/W-X			R/W-0h
23	22	21	20	19	18	17	16
RESERVED			event_sel26	RESERVED			event_trig26
R/W-X			R/W-0h	R/W-X			R/W-0h
15	14	13	12	11	10	9	8
RESERVED			event_sel25	RESERVED			event_trig25
R/W-X			R/W-0h	R/W-X			R/W-0h
7	6	5	4	3	2	1	0
RESERVED			event_sel24	RESERVED			event_trig24
R/W-X			R/W-0h	R/W-X			R/W-0h

Table 6-1333. MSS_DMM_EVENT6_REG Register Field Descriptions

Bit	Field	Type	Reset	Description
31-29	RESERVED	R/W	X	

Copyright © 2025 Texas Instruments Incorporated

Table 6-1333. MSS_DMM_EVENT6_REG Register Field Descriptions (continued)

Bit	Field	Type	Reset	Description
28	event_sel27	R/W	0h	Writing 1'b1 : Selects DMM event_trig as interrupt source. 1'b0 : Selects actual interrupt as interrupt source.
27-25	RESERVED	R/W	X	
24	event_trig27	R/W	0h	DMM trigger for RCSS_CSI2A_EOL_CNTX4_INT
23-21	RESERVED	R/W	X	
20	event_sel26	R/W	0h	Writing 1'b1 : Selects DMM event_trig as interrupt source. 1'b0 : Selects actual interrupt as interrupt source.
19-17	RESERVED	R/W	X	
16	event_trig26	R/W	0h	DMM trigger for RCSS_CSI2A_EOL_CNTX4_INT
15-13	RESERVED	R/W	X	
12	event_sel25	R/W	0h	Writing 1'b1 : Selects DMM event_trig as interrupt source. 1'b0 : Selects actual interrupt as interrupt source.
11-9	RESERVED	R/W	X	
8	event_trig25	R/W	0h	DMM trigger for RCSS_CSI2A_EOL_CNTX4_INT
7-5	RESERVED	R/W	X	
4	event_sel24	R/W	0h	Writing 1'b1 : Selects DMM event_trig as interrupt source. 1'b0 : Selects actual interrupt as interrupt source.
3-1	RESERVED	R/W	X	
0	event_trig24	R/W	0h	DMM trigger for RCSS_CSI2A_EOL_CNTX4_INT

6.2.7.412 MSS_DMM_EVENT7_REG Register (Offset = 68Ch) [reset = X]

MSS_DMM_EVENT7_REG is shown in Figure 6-1327 and described in Table 6-1334.

Return to the Summary Table.

Figure 6-1327. MSS_DMM_EVENT7_REG Register

31	30	29	28	27	26	25	24
RESERVED			event_sel31	RESERVED			event_trig31
R/W-X			R/W-0h	R/W-X			R/W-0h
23	22	21	20	19	18	17	16
RESERVED			event_sel30	RESERVED			event_trig30
R/W-X			R/W-0h	R/W-X			R/W-0h
15	14	13	12	11	10	9	8
RESERVED			event_sel29	RESERVED			event_trig29
R/W-X			R/W-0h	R/W-X			R/W-0h
7	6	5	4	3	2	1	0
RESERVED			event_sel28	RESERVED			event_trig28
R/W-X			R/W-0h	R/W-X			R/W-0h

Table 6-1334. MSS_DMM_EVENT7_REG Register Field Descriptions

Bit	Field	Type	Reset	Description
31-29	RESERVED	R/W	X	
28	event_sel31	R/W	0h	Writing 1'b1 : Selects DMM event_trig as interrupt source. 1'b0 : Selects actual interrupt as interrupt source.
27-25	RESERVED	R/W	X	
24	event_trig31	R/W	0h	DMM trigger for RCSS_CSI2A_EOL_CNTX5_INT

Copyright © 2025 Texas Instruments Incorporated

Table 6-1334. MSS_DMM_EVENT7_REG Register Field Descriptions (continued)

Bit	Field	Type	Reset	Description
23-21	RESERVED	R/W	X	
20	event_sel30	R/W	0h	Writing 1'b1 : Selects DMM event_trig as interrupt source. 1'b0 : Selects actual interrupt as interrupt source.
19-17	RESERVED	R/W	X	
16	event_trig30	R/W	0h	DMM trigger for RCSS_CSI2A_EOL_CNTX5_INT
15-13	RESERVED	R/W	X	
12	event_sel29	R/W	0h	Writing 1'b1 : Selects DMM event_trig as interrupt source. 1'b0 : Selects actual interrupt as interrupt source.
11-9	RESERVED	R/W	X	
8	event_trig29	R/W	0h	DMM trigger for RCSS_CSI2A_EOL_CNTX5_INT
7-5	RESERVED	R/W	X	
4	event_sel28	R/W	0h	Writing 1'b1 : Selects DMM event_trig as interrupt source. 1'b0 : Selects actual interrupt as interrupt source.
3-1	RESERVED	R/W	X	
0	event_trig28	R/W	0h	DMM trigger for RCSS_CSI2A_EOL_CNTX5_INT

6.2.7.413 MSS_DMM_EVENT8_REG Register (Offset = 690h) [reset = X]

MSS_DMM_EVENT8_REG is shown in Figure 6-1328 and described in Table 6-1335.

Return to the Summary Table.

Figure 6-1328. MSS_DMM_EVENT8_REG Register

31	30	29	28	27	26	25	24
RESERVED			event_sel35	RESERVED			event_trig35
R/W-X			R/W-0h	R/W-X			R/W-0h
23	22	21	20	19	18	17	16
RESERVED			event_sel34	RESERVED			event_trig34
R/W-X			R/W-0h	R/W-X			R/W-0h
15	14	13	12	11	10	9	8
RESERVED			event_sel33	RESERVED			event_trig33
R/W-X			R/W-0h	R/W-X			R/W-0h
7	6	5	4	3	2	1	0
RESERVED			event_sel32	RESERVED			event_trig32
R/W-X			R/W-0h	R/W-X			R/W-0h

Table 6-1335. MSS_DMM_EVENT8_REG Register Field Descriptions

Bit	Field	Type	Reset	Description
31-29	RESERVED	R/W	X	
28	event_sel35	R/W	0h	Writing 1'b1 : Selects DMM event_trig as interrupt source. 1'b0 : Selects actual interrupt as interrupt source.
27-25	RESERVED	R/W	X	
24	event_trig35	R/W	0h	DMM trigger for RCSS_CSI2A_EOL_CNTX6_INT
23-21	RESERVED	R/W	X	
20	event_sel34	R/W	0h	Writing 1'b1 : Selects DMM event_trig as interrupt source. 1'b0 : Selects actual interrupt as interrupt source.
19-17	RESERVED	R/W	X	

Copyright © 2025 Texas Instruments Incorporated

Table 6-1335. MSS_DMM_EVENT8_REG Register Field Descriptions (continued)

Bit	Field	Type	Reset	Description
16	event_trig34	R/W	0h	DMM trigger for RCSS_CSI2A_EOL_CNTX6_INT
15-13	RESERVED	R/W	X	
12	event_sel33	R/W	0h	Writing 1'b1 : Selects DMM event_trig as interrupt source. 1'b0 : Selects actual interrupt as interrupt source.
11-9	RESERVED	R/W	X	
8	event_trig33	R/W	0h	DMM trigger for RCSS_CSI2A_EOL_CNTX6_INT
7-5	RESERVED	R/W	X	
4	event_sel32	R/W	0h	Writing 1'b1 : Selects DMM event_trig as interrupt source. 1'b0 : Selects actual interrupt as interrupt source.
3-1	RESERVED	R/W	X	
0	event_trig32	R/W	0h	DMM trigger for RCSS_CSI2A_EOL_CNTX6_INT

6.2.7.414 MSS_DMM_EVENT9_REG Register (Offset = 694h) [reset = X]

MSS_DMM_EVENT9_REG is shown in Figure 6-1329 and described in Table 6-1336.

Return to the Summary Table.

Figure 6-1329. MSS_DMM_EVENT9_REG Register

31	30	29	28	27	26	25	24
RESERVED			event_sel39	RESERVED			event_trig39
R/W-X			R/W-0h	R/W-X			R/W-0h
23	22	21	20	19	18	17	16
RESERVED			event_sel38	RESERVED			event_trig38
R/W-X			R/W-0h	R/W-X			R/W-0h
15	14	13	12	11	10	9	8
RESERVED			event_sel37	RESERVED			event_trig37
R/W-X			R/W-0h	R/W-X			R/W-0h
7	6	5	4	3	2	1	0
RESERVED			event_sel36	RESERVED			event_trig36
R/W-X			R/W-0h	R/W-X			R/W-0h

Table 6-1336. MSS_DMM_EVENT9_REG Register Field Descriptions

Bit	Field	Type	Reset	Description
31-29	RESERVED	R/W	X	
28	event_sel39	R/W	0h	Writing 1'b1 : Selects DMM event_trig as interrupt source. 1'b0 : Selects actual interrupt as interrupt source.
27-25	RESERVED	R/W	X	
24	event_trig39	R/W	0h	DMM trigger for RCSS_CSI2A_EOL_CNTX7_INT
23-21	RESERVED	R/W	X	
20	event_sel38	R/W	0h	Writing 1'b1 : Selects DMM event_trig as interrupt source. 1'b0 : Selects actual interrupt as interrupt source.
19-17	RESERVED	R/W	X	
16	event_trig38	R/W	0h	DMM trigger for RCSS_CSI2A_EOL_CNTX7_INT
15-13	RESERVED	R/W	X	
12	event_sel37	R/W	0h	Writing 1'b1 : Selects DMM event_trig as interrupt source. 1'b0 : Selects actual interrupt as interrupt source.

Copyright © 2025 Texas Instruments Incorporated

Table 6-1336. MSS_DMM_EVENT9_REG Register Field Descriptions (continued)

Bit	Field	Type	Reset	Description
11-9	RESERVED	R/W	X	
8	event_trig37	R/W	0h	DMM trigger for RCSS_CSI2A_EOL_CNTX7_INT
7-5	RESERVED	R/W	X	
4	event_sel36	R/W	0h	Writing 1'b1 : Selects DMM event_trig as interrupt source. 1'b0 : Selects actual interrupt as interrupt source.
3-1	RESERVED	R/W	X	
0	event_trig36	R/W	0h	DMM trigger for RCSS_CSI2A_EOL_CNTX7_INT

6.2.7.415 MSS_DMM_EVENT10_REG Register (Offset = 698h) [reset = X]

MSS_DMM_EVENT10_REG is shown in Figure 6-1330 and described in Table 6-1337.

Return to the Summary Table.

Figure 6-1330. MSS_DMM_EVENT10_REG Register

31	30	29	28	27	26	25	24
RESERVED			event_sel43	RESERVED			event_trig43
R/W-X			R/W-0h	R/W-X			R/W-0h
23	22	21	20	19	18	17	16
RESERVED			event_sel42	RESERVED			event_trig42
R/W-X			R/W-0h	R/W-X			R/W-0h
15	14	13	12	11	10	9	8
RESERVED			event_sel41	RESERVED			event_trig41
R/W-X			R/W-0h	R/W-X			R/W-0h
7	6	5	4	3	2	1	0
RESERVED			event_sel40	RESERVED			event_trig40
R/W-X			R/W-0h	R/W-X			R/W-0h

Table 6-1337. MSS_DMM_EVENT10_REG Register Field Descriptions

Bit	Field	Type	Reset	Description
31-29	RESERVED	R/W	X	
28	event_sel43	R/W	0h	Writing 1'b1 : Selects DMM event_trig as interrupt source. 1'b0 : Selects actual interrupt as interrupt source.
27-25	RESERVED	R/W	X	
24	event_trig43	R/W	0h	DMM trigger for RCSS_CSI2B_SOF_INT0
23-21	RESERVED	R/W	X	
20	event_sel42	R/W	0h	Writing 1'b1 : Selects DMM event_trig as interrupt source. 1'b0 : Selects actual interrupt as interrupt source.
19-17	RESERVED	R/W	X	
16	event_trig42	R/W	0h	DMM trigger for RCSS_CSI2B_SOF_INT0
15-13	RESERVED	R/W	X	
12	event_sel41	R/W	0h	Writing 1'b1 : Selects DMM event_trig as interrupt source. 1'b0 : Selects actual interrupt as interrupt source.
11-9	RESERVED	R/W	X	
8	event_trig41	R/W	0h	DMM trigger for RCSS_CSI2B_SOF_INT0
7-5	RESERVED	R/W	X	

Copyright © 2025 Texas Instruments Incorporated

Table 6-1337. MSS_DMM_EVENT10_REG Register Field Descriptions (continued)

Bit	Field	Type	Reset	Description
4	event_sel40	R/W	0h	Writing 1'b1 : Selects DMM event_trig as interrupt source. 1'b0 : Selects actual interrupt as interrupt source.
3-1	RESERVED	R/W	X	
0	event_trig40	R/W	0h	DMM trigger for RCSS_CSI2B_SOF_INT0

6.2.7.416 MSS_DMM_EVENT11_REG Register (Offset = 69Ch) [reset = X]

MSS_DMM_EVENT11_REG is shown in Figure 6-1331 and described in Table 6-1338.

Return to the Summary Table.

Figure 6-1331. MSS_DMM_EVENT11_REG Register

31	30	29	28	27	26	25	24
RESERVED			event_sel47	RESERVED			event_trig47
R/W-X			R/W-0h	R/W-X			R/W-0h
23	22	21	20	19	18	17	16
RESERVED			event_sel46	RESERVED			event_trig46
R/W-X			R/W-0h	R/W-X			R/W-0h
15	14	13	12	11	10	9	8
RESERVED			event_sel45	RESERVED			event_trig45
R/W-X			R/W-0h	R/W-X			R/W-0h
7	6	5	4	3	2	1	0
RESERVED			event_sel44	RESERVED			event_trig44
R/W-X			R/W-0h	R/W-X			R/W-0h

Table 6-1338. MSS_DMM_EVENT11_REG Register Field Descriptions

Bit	Field	Type	Reset	Description
31-29	RESERVED	R/W	X	
28	event_sel47	R/W	0h	Writing 1'b1 : Selects DMM event_trig as interrupt source. 1'b0 : Selects actual interrupt as interrupt source.
27-25	RESERVED	R/W	X	
24	event_trig47	R/W	0h	DMM trigger for RCSS_CSI2B_SOF_INT1
23-21	RESERVED	R/W	X	
20	event_sel46	R/W	0h	Writing 1'b1 : Selects DMM event_trig as interrupt source. 1'b0 : Selects actual interrupt as interrupt source.
19-17	RESERVED	R/W	X	
16	event_trig46	R/W	0h	DMM trigger for RCSS_CSI2B_SOF_INT1
15-13	RESERVED	R/W	X	
12	event_sel45	R/W	0h	Writing 1'b1 : Selects DMM event_trig as interrupt source. 1'b0 : Selects actual interrupt as interrupt source.
11-9	RESERVED	R/W	X	
8	event_trig45	R/W	0h	DMM trigger for RCSS_CSI2B_SOF_INT1
7-5	RESERVED	R/W	X	
4	event_sel44	R/W	0h	Writing 1'b1 : Selects DMM event_trig as interrupt source. 1'b0 : Selects actual interrupt as interrupt source.
3-1	RESERVED	R/W	X	
0	event_trig44	R/W	0h	DMM trigger for RCSS_CSI2B_SOF_INT1

Copyright © 2025 Texas Instruments Incorporated

6.2.7.417 MSS_DMM_EVENT12_REG Register (Offset = 6A0h) [reset = X]

MSS_DMM_EVENT12_REG is shown in Figure 6-1332 and described in Table 6-1339.

Return to the Summary Table.

Figure 6-1332. MSS_DMM_EVENT12_REG Register

31	30	29	28	27	26	25	24
RESERVED			event_sel51	RESERVED			event_trig51
R/W-X			R/W-0h	R/W-X			R/W-0h
23	22	21	20	19	18	17	16
RESERVED			event_sel50	RESERVED			event_trig50
R/W-X			R/W-0h	R/W-X			R/W-0h
15	14	13	12	11	10	9	8
RESERVED			event_sel49	RESERVED			event_trig49
R/W-X			R/W-0h	R/W-X			R/W-0h
7	6	5	4	3	2	1	0
RESERVED			event_sel48	RESERVED			event_trig48
R/W-X			R/W-0h	R/W-X			R/W-0h

Table 6-1339. MSS_DMM_EVENT12_REG Register Field Descriptions

Bit	Field	Type	Reset	Description
31-29	RESERVED	R/W	X	
28	event_sel51	R/W	0h	Writing 1'b1 : Selects DMM event_trig as interrupt source. 1'b0 : Selects actual interrupt as interrupt source.
27-25	RESERVED	R/W	X	
24	event_trig51	R/W	0h	DMM trigger for RCSS_CSI2B_EOL_CNTX0_INT
23-21	RESERVED	R/W	X	
20	event_sel50	R/W	0h	Writing 1'b1 : Selects DMM event_trig as interrupt source. 1'b0 : Selects actual interrupt as interrupt source.
19-17	RESERVED	R/W	X	
16	event_trig50	R/W	0h	DMM trigger for RCSS_CSI2B_EOL_CNTX0_INT
15-13	RESERVED	R/W	X	
12	event_sel49	R/W	0h	Writing 1'b1 : Selects DMM event_trig as interrupt source. 1'b0 : Selects actual interrupt as interrupt source.
11-9	RESERVED	R/W	X	
8	event_trig49	R/W	0h	DMM trigger for RCSS_CSI2B_EOL_CNTX0_INT
7-5	RESERVED	R/W	X	
4	event_sel48	R/W	0h	Writing 1'b1 : Selects DMM event_trig as interrupt source. 1'b0 : Selects actual interrupt as interrupt source.
3-1	RESERVED	R/W	X	
0	event_trig48	R/W	0h	DMM trigger for RCSS_CSI2B_EOL_CNTX0_INT

6.2.7.418 MSS_DMM_EVENT13_REG Register (Offset = 6A4h) [reset = X]

MSS_DMM_EVENT13_REG is shown in Figure 6-1333 and described in Table 6-1340.

Return to the Summary Table.

Figure 6-1333. MSS_DMM_EVENT13_REG Register

31	30	29	28	27	26	25	24

Copyright © 2025 Texas Instruments Incorporated

Figure 6-1333. MSS_DMM_EVENT13_REG Register (continued)

RESERVED			event_sel55	RESERVED			event_trig55
R/W-X			R/W-0h	R/W-X			R/W-0h
23	22	21	20	19	18	17	16
RESERVED			event_sel54	RESERVED			event_trig54
R/W-X			R/W-0h	R/W-X			R/W-0h
15	14	13	12	11	10	9	8
RESERVED			event_sel53	RESERVED			event_trig53
R/W-X			R/W-0h	R/W-X			R/W-0h
7	6	5	4	3	2	1	0
RESERVED			event_sel52	RESERVED			event_trig52
R/W-X			R/W-0h	R/W-X			R/W-0h

Table 6-1340. MSS_DMM_EVENT13_REG Register Field Descriptions

Bit	Field	Type	Reset	Description
31-29	RESERVED	R/W	X	
28	event_sel55	R/W	0h	Writing 1'b1 : Selects DMM event_trig as interrupt source. 1'b0 : Selects actual interrupt as interrupt source.
27-25	RESERVED	R/W	X	
24	event_trig55	R/W	0h	DMM trigger for RCSS_CSI2B_EOL_CNTX1_INT
23-21	RESERVED	R/W	X	
20	event_sel54	R/W	0h	Writing 1'b1 : Selects DMM event_trig as interrupt source. 1'b0 : Selects actual interrupt as interrupt source.
19-17	RESERVED	R/W	X	
16	event_trig54	R/W	0h	DMM trigger for RCSS_CSI2B_EOL_CNTX1_INT
15-13	RESERVED	R/W	X	
12	event_sel53	R/W	0h	Writing 1'b1 : Selects DMM event_trig as interrupt source. 1'b0 : Selects actual interrupt as interrupt source.
11-9	RESERVED	R/W	X	
8	event_trig53	R/W	0h	DMM trigger for RCSS_CSI2B_EOL_CNTX1_INT
7-5	RESERVED	R/W	X	
4	event_sel52	R/W	0h	Writing 1'b1 : Selects DMM event_trig as interrupt source. 1'b0 : Selects actual interrupt as interrupt source.
3-1	RESERVED	R/W	X	
0	event_trig52	R/W	0h	DMM trigger for RCSS_CSI2B_EOL_CNTX1_INT

6.2.7.419 MSS_DMM_EVENT14_REG Register (Offset = 6A8h) [reset = X]

MSS_DMM_EVENT14_REG is shown in Figure 6-1334 and described in Table 6-1341.

Return to the Summary Table.

Figure 6-1334. MSS_DMM_EVENT14_REG Register

31	30	29	28	27	26	25	24
RESERVED			event_sel59	RESERVED			event_trig59
R/W-X			R/W-0h	R/W-X			R/W-0h
23	22	21	20	19	18	17	16
RESERVED			event_sel58	RESERVED			event_trig58
R/W-X			R/W-0h	R/W-X			R/W-0h

Copyright © 2025 Texas Instruments Incorporated

Figure 6-1334. MSS_DMM_EVENT14_REG Register (continued)

15	14	13	12	11	10	9	8
RESERVED			event_sel57	RESERVED			event_trig57
R/W-X			R/W-0h	R/W-X			R/W-0h
7	6	5	4	3	2	1	0
RESERVED			event_sel56	RESERVED			event_trig56
R/W-X			R/W-0h	R/W-X			R/W-0h

Table 6-1341. MSS_DMM_EVENT14_REG Register Field Descriptions

Bit	Field	Type	Reset	Description
31-29	RESERVED	R/W	X	
28	event_sel59	R/W	0h	Writing 1'b1 : Selects DMM event_trig as interrupt source. 1'b0 : Selects actual interrupt as interrupt source.
27-25	RESERVED	R/W	X	
24	event_trig59	R/W	0h	DMM trigger for RCSS_CSI2B_EOL_CNTX2_INT
23-21	RESERVED	R/W	X	
20	event_sel58	R/W	0h	Writing 1'b1 : Selects DMM event_trig as interrupt source. 1'b0 : Selects actual interrupt as interrupt source.
19-17	RESERVED	R/W	X	
16	event_trig58	R/W	0h	DMM trigger for RCSS_CSI2B_EOL_CNTX2_INT
15-13	RESERVED	R/W	X	
12	event_sel57	R/W	0h	Writing 1'b1 : Selects DMM event_trig as interrupt source. 1'b0 : Selects actual interrupt as interrupt source.
11-9	RESERVED	R/W	X	
8	event_trig57	R/W	0h	DMM trigger for RCSS_CSI2B_EOL_CNTX2_INT
7-5	RESERVED	R/W	X	
4	event_sel56	R/W	0h	Writing 1'b1 : Selects DMM event_trig as interrupt source. 1'b0 : Selects actual interrupt as interrupt source.
3-1	RESERVED	R/W	X	
0	event_trig56	R/W	0h	DMM trigger for RCSS_CSI2B_EOL_CNTX2_INT

6.2.7.420 MSS_DMM_EVENT15_REG Register (Offset = 6ACh) [reset = X]

MSS_DMM_EVENT15_REG is shown in Figure 6-1335 and described in Table 6-1342.

Return to the Summary Table.

Figure 6-1335. MSS_DMM_EVENT15_REG Register

31	30	29	28	27	26	25	24
RESERVED			event_sel63	RESERVED			event_trig63
R/W-X			R/W-0h	R/W-X			R/W-0h
23	22	21	20	19	18	17	16
RESERVED			event_sel62	RESERVED			event_trig62
R/W-X			R/W-0h	R/W-X			R/W-0h
15	14	13	12	11	10	9	8
RESERVED			event_sel61	RESERVED			event_trig61
R/W-X			R/W-0h	R/W-X			R/W-0h
7	6	5	4	3	2	1	0
RESERVED			event_sel60	RESERVED			event_trig60

Copyright © 2025 Texas Instruments Incorporated

Figure 6-1335. MSS_DMM_EVENT15_REG Register (continued)

R/W-X	R/W-0h	R/W-X	R/W-0h

Table 6-1342. MSS_DMM_EVENT15_REG Register Field Descriptions

Bit	Field	Type	Reset	Description
31-29	RESERVED	R/W	X	
28	event_sel63	R/W	0h	Writing 1'b1 : Selects DMM event_trig as interrupt source. 1'b0 : Selects actual interrupt as interrupt source.
27-25	RESERVED	R/W	X	
24	event_trig63	R/W	0h	DMM trigger for RCSS_CSI2B_EOL_CNTX3_INT
23-21	RESERVED	R/W	X	
20	event_sel62	R/W	0h	Writing 1'b1 : Selects DMM event_trig as interrupt source. 1'b0 : Selects actual interrupt as interrupt source.
19-17	RESERVED	R/W	X	
16	event_trig62	R/W	0h	DMM trigger for RCSS_CSI2B_EOL_CNTX3_INT
15-13	RESERVED	R/W	X	
12	event_sel61	R/W	0h	Writing 1'b1 : Selects DMM event_trig as interrupt source. 1'b0 : Selects actual interrupt as interrupt source.
11-9	RESERVED	R/W	X	
8	event_trig61	R/W	0h	DMM trigger for RCSS_CSI2B_EOL_CNTX3_INT
7-5	RESERVED	R/W	X	
4	event_sel60	R/W	0h	Writing 1'b1 : Selects DMM event_trig as interrupt source. 1'b0 : Selects actual interrupt as interrupt source.
3-1	RESERVED	R/W	X	
0	event_trig60	R/W	0h	DMM trigger for RCSS_CSI2B_EOL_CNTX3_INT

6.2.7.421 MSS_TPTC_BOUNDARY_CFG Register (Offset = 6B0h) [reset = X]

MSS_TPTC_BOUNDARY_CFG is shown in Figure 6-1336 and described in Table 6-1343.

Return to the Summary Table.

Figure 6-1336. MSS_TPTC_BOUNDARY_CFG Register

31	30	29	28	27	26	25	24
RESERVED							
R/W-X							
23	22	21	20	19	18	17	16
RESERVED		tptc_b0_size					
R/W-X		R/W-13h					
15	14	13	12	11	10	9	8
RESERVED		tptc_a1_size					
R/W-X		R/W-13h					
7	6	5	4	3	2	1	0
RESERVED		tptc_a0_size					
R/W-X		R/W-13h					

Table 6-1343. MSS_TPTC_BOUNDARY_CFG Register Field Descriptions

Bit	Field	Type	Reset	Description
31-22	RESERVED	R/W	X	

Copyright © 2025 Texas Instruments Incorporated

Table 6-1343. MSS_TPTC_BOUNDARY_CFG Register Field Descriptions (continued)

Bit	Field	Type	Reset	Description
21-16	tptc_b0_size	R/W	13h	6 bit signal used for deciding the boundary crossing size for CID-RID-SID reordering of MSS_TPTC_B0 Example: writing 6'd19 decidies boundary to be 2 ^{19} i.e. 512 KB
15-14	RESERVED	R/W	X	
13-8	tptc_a1_size	R/W	13h	6 bit signal used for deciding the boundary crossing size for CID-RID-SID reordering of MSS_TPTC_A1 Example: writing 6'd19 decidies boundary to be 2 ^{19} i.e. 512 KB
7-6	RESERVED	R/W	X	
5-0	tptc_a0_size	R/W	13h	6 bit signal used for deciding the boundary crossing size for CID-RID-SID reordering of MSS_TPTC_A0 Example: writing 6'd19 decidies boundary to be 2 ^{19} i.e. 512 KB

6.2.7.422 MSS_TPTC_XID_REORDER_CFG Register (Offset = 6B4h) [reset = X]

MSS_TPTC_XID_REORDER_CFG is shown in Figure 6-1337 and described in Table 6-1344.

Return to the Summary Table.

Figure 6-1337. MSS_TPTC_XID_REORDER_CFG Register

31	30	29	28	27	26	25	24
RESERVED							
R/W-X							
23	22	21	20	19	18	17	16
RESERVED							tptc_b0_disable
R/W-X							R/W-0h
15	14	13	12	11	10	9	8
RESERVED							tptc_a1_disable
R/W-X							R/W-0h
7	6	5	4	3	2	1	0
RESERVED							tptc_a0_disable
R/W-X							R/W-0h

Table 6-1344. MSS_TPTC_XID_REORDER_CFG Register Field Descriptions

Bit	Field	Type	Reset	Description
31-17	RESERVED	R/W	X	
16	tptc_b0_disable	R/W	0h	writing 1'b1 will disable the CID-RID-SID reodering feature for MSS_TPTC_B0
15-9	RESERVED	R/W	X	
8	tptc_a1_disable	R/W	0h	writing 1'b1 will disable the CID-RID-SID reodering feature for MSS_TPTC_A1
7-1	RESERVED	R/W	X	
0	tptc_a0_disable	R/W	0h	writing 1'b1 will disable the CID-RID-SID reodering feature for MSS_TPTC_A0

6.2.7.423 GPADC_CTRL Register (Offset = 6B8h) [reset = X]

GPADC_CTRL is shown in Figure 6-1338 and described in Table 6-1345.

Return to the Summary Table.

Copyright © 2025 Texas Instruments Incorporated

Figure 6-1338. GPADC_CTRL Register

31	30	29	28	27	26	25	24
RESERVED							
R/W-X							
23	22	21	20	19	18	17	16
RESERVED							
R/W-X							
15	14	13	12	11	10	9	8
RESERVED			gpadc_trigin_sel				
R/W-X			R/W-Fh				
7	6	5	4	3	2	1	0
RESERVED							gpadc_sw_trig
R/W-X							R/W-0h

Table 6-1345. GPADC_CTRL Register Field Descriptions

Bit	Field	Type	Reset	Description
31-13	RESERVED	R/W	X	
12-8	gpadc_trigin_sel	R/W	Fh	Writing below decimal values to this regiter will select corresponding interrupt as GPADC trigger source. 0: GPIO_0 1: GPIO_1 2: GPIO_2 3: GPIO_3 4: RSS_CSI2A_EOL_INT 5: RSS_CSI2A_SOF_INT0 6: RSS_CSI2A_SOF_INT1 7: RSS_CSI2A_SOF_INT 8: RSS_CSI2B_SOF_INT 9: HW_Sync_FE1 10: HW_Sync_FE2 11: DSS_RTIA_1 12: DSS_RTIB_1 13: MSS_RTIA_INT1 14: MSS_RTIB_INT1 15: MMR based SW trigger
7-1	RESERVED	R/W	X	
0	gpadc_sw_trig	R/W	0h	Writing 1'b1 will give MMR based SW trigger to GPADC

6.2.7.424 HW_Sync_FE_CTRL Register (Offset = 6BCh) [reset = X]

HW_Sync_FE_CTRL is shown in Figure 6-1339 and described in Table 6-1346.

Return to the Summary Table.

Figure 6-1339. HW_Sync_FE_CTRL Register

31	30	29	28	27	26	25	24
RESERVED							
R/W-X							
23	22	21	20	19	18	17	16
RESERVED							
R/W-X							
15	14	13	12	11	10	9	8
RESERVED							fe2_sel
R/W-X							R/W-0h
7	6	5	4	3	2	1	0
RESERVED							fe1_sel
R/W-X							R/W-0h

Copyright © 2025 Texas Instruments Incorporated

Table 6-1346. HW_Sync_FE_CTRL Register Field Descriptions

Bit	Field	Type	Reset	Description
31-9	RESERVED	R/W	X	
8	fe2_sel	R/W	0h	Writing 1'b0 : Selects MCANA filter event as HW_Sync_FE2 1'b1 : Selects MCANB filter event as HW_Sync_FE2
7-1	RESERVED	R/W	X	
0	fe1_sel	R/W	0h	Writing 1'b0 : Selects MCANA filter event as HW_Sync_FE1 1'b1 : Selects MCANB filter event as HW_Sync_FE1

6.2.7.425 DEBUGSS_CSETB_FLUSH Register (Offset = 6C0h) [reset = X]

DEBUGSS_CSETB_FLUSH is shown in Figure 6-1340 and described in Table 6-1347.

Return to the Summary Table.

Figure 6-1340. DEBUGSS_CSETB_FLUSH Register

31	30	29	28	27	26	25	24
RESERVED							
R/W-X							
23	22	21	20	19	18	17	16
RESERVED							
R/W-X							
15	14	13	12	11	10	9	8
RESERVED					CSETB_FULL	CSETB_ACQ_COMPLETE	CSETB_FLUSHINACK
R/W-X					R-0h	R-0h	R-0h
7	6	5	4	3	2	1	0
RESERVED							CSETB_FLUSHIN
R/W-X							R/W-0h

Table 6-1347. DEBUGSS_CSETB_FLUSH Register Field Descriptions

Bit	Field	Type	Reset	Description
31-11	RESERVED	R/W	X	
10	CSETB_FULL	R	0h	When HIGH indicates that the ETB RAM has overflowed or wrapped around to address zero
9	CSETB_ACQ_COMPLETE	R	0h	When HIGH, indicates that trace acquisition is complete by ETB, that is, the trigger counter is at zero
8	CSETB_FLUSHINACK	R	0h	Return acknowledgement to CSETBFLUSHIN
7-1	RESERVED	R/W	X	
0	CSETB_FLUSHIN	R/W	0h	External control used to assert the ATB signal AFVALIDS and drain any historical FIFO information on the bus

6.2.7.426 ANALOG_WU_STATUS_REG_POLARITY_INV Register (Offset = 6C4h) [reset = 3D5Ch]

ANALOG_WU_STATUS_REG_POLARITY_INV is shown in Figure 6-1341 and described in Table 6-1348.

Return to the Summary Table.

Figure 6-1341. ANALOG_WU_STATUS_REG_POLARITY_INV Register

31	30	29	28	27	26	25	24	23	22	21	20	19	18	17	16	15	14	13	12	11	10	9	8	7	6	5	4	3	2	1	0
inv_ctrl																															

Copyright © 2025 Texas Instruments Incorporated

Figure 6-1341. ANALOG_WU_STATUS_REG_POLARITY_INV Register (continued)

R/W-3D5Ch

Table 6-1348. ANALOG_WU_STATUS_REG_POLARITY_INV Register Field Descriptions

Bit	Field	Type	Reset	Description
31-0	inv_ctrl	R/W	3D5Ch	This register decides the polarity of each status bit before providing to the MSS_ESM. Each bit controls the respective status bit.

6.2.7.427 ANALOG_CLK_STATUS_REG_POLARITY_INV Register (Offset = 6C8h) [reset = 0h]

ANALOG_CLK_STATUS_REG_POLARITY_INV is shown in Figure 6-1342 and described in Table 6-1349.

Return to the Summary Table.

Figure 6-1342. ANALOG_CLK_STATUS_REG_POLARITY_INV Register

31	30	29	28	27	26	25	24	23	22	21	20	19	18	17	16	15	14	13	12	11	10	9	8	7	6	5	4	3	2	1	0
inv_ctrl																															
R/W-0h																															

Table 6-1349. ANALOG_CLK_STATUS_REG_POLARITY_INV Register Field Descriptions

Bit	Field	Type	Reset	Description
31-0	inv_ctrl	R/W	0h	This register decides the polarity of each status bit before providing to the MSS_ESM. Each bit controls the respective status bit.

6.2.7.428 ANALOG_WU_STATUS_REG_GRP1_MASK Register (Offset = 6CCh) [reset = FFFFFFFFh]

ANALOG_WU_STATUS_REG_GRP1_MASK is shown in Figure 6-1343 and described in Table 6-1350.

Return to the Summary Table.

Figure 6-1343. ANALOG_WU_STATUS_REG_GRP1_MASK Register

31	30	29	28	27	26	25	24	23	22	21	20	19	18	17	16	15	14	13	12	11	10	9	8	7	6	5	4	3	2	1	0
mask																															
R/W-FFFFFFFFh																															

Table 6-1350. ANALOG_WU_STATUS_REG_GRP1_MASK Register Field Descriptions

Bit	Field	Type	Reset	Description
31-0	mask	R/W	FFFFFFFFh	Writing 1'b1 : Masks the corresponding status bit before generating a group 1 ESM error. 1'b0 : Unmasks the corresponding status bit before generating a group 1 ESM error.

6.2.7.429 ANALOG_CLK_STATUS_REG_GRP1_MASK Register (Offset = 6D0h) [reset = FFFFFFFFh]

ANALOG_CLK_STATUS_REG_GRP1_MASK is shown in Figure 6-1344 and described in Table 6-1351.

Return to the Summary Table.

Figure 6-1344. ANALOG_CLK_STATUS_REG_GRP1_MASK Register

31	30	29	28	27	26	25	24	23	22	21	20	19	18	17	16	15	14	13	12	11	10	9	8	7	6	5	4	3	2	1	0
mask																															
R/W-FFFFFFFFh																															

Copyright © 2025 Texas Instruments Incorporated

Table 6-1351. ANALOG_CLK_STATUS_REG_GRP1_MASK Register Field Descriptions

Bit	Field	Type	Reset	Description
31-0	mask	R/W	FFFFFFFFh	Writing 1'b1 : Masks the corresponding status bit before generating a group 1 ESM error. 1'b0 : Unmasks the corresponding status bit before generating a group 1 ESM error.

6.2.7.430 ANALOG_WU_STATUS_REG_GRP2_MASK Register (Offset = 6D4h) [reset = FFFFFFFFh]

ANALOG_WU_STATUS_REG_GRP2_MASK is shown in Figure 6-1345 and described in Table 6-1352.

Return to the Summary Table.

Figure 6-1345. ANALOG_WU_STATUS_REG_GRP2_MASK Register

31	30	29	28	27	26	25	24	23	22	21	20	19	18	17	16	15	14	13	12	11	10	9	8	7	6	5	4	3	2	1	0
mask																															
R/W-FFFFFFFFh																															

Table 6-1352. ANALOG_WU_STATUS_REG_GRP2_MASK Register Field Descriptions

Bit	Field	Type	Reset	Description
31-0	mask	R/W	FFFFFFFFh	Writing 1'b1 : Masks the corresponding status bit before generating a group 2 ESM error. 1'b0 : Unmasks the corresponding status bit before generating a group 2 ESM error.

6.2.7.431 ANALOG_CLK_STATUS_REG_GRP2_MASK Register (Offset = 6D8h) [reset = FFFFFFFFh]

ANALOG_CLK_STATUS_REG_GRP2_MASK is shown in Figure 6-1346 and described in Table 6-1353.

Return to the Summary Table.

Figure 6-1346. ANALOG_CLK_STATUS_REG_GRP2_MASK Register

31	30	29	28	27	26	25	24	23	22	21	20	19	18	17	16	15	14	13	12	11	10	9	8	7	6	5	4	3	2	1	0
mask																															
R/W-FFFFFFFFh																															

Table 6-1353. ANALOG_CLK_STATUS_REG_GRP2_MASK Register Field Descriptions

Bit	Field	Type	Reset	Description
31-0	mask	R/W	FFFFFFFFh	Writing 1'b1 : Masks the corresponding status bit before generating a group 2 ESM error. 1'b0 : Unmasks the corresponding status bit before generating a group 2 ESM error.

6.2.7.432 NERROR_MASK Register (Offset = 6DCh) [reset = X]

NERROR_MASK is shown in Figure 6-1347 and described in Table 6-1354.

Return to the Summary Table.

Figure 6-1347. NERROR_MASK Register

31	30	29	28	27	26	25	24	23	22	21	20	19	18	17	16
RESERVED															
R/W-X															
15	14	13	12	11	10	9	8	7	6	5	4	3	2	1	0
RESERVED														mask	
R/W-X														R/W-0h	

Copyright © 2025 Texas Instruments Incorporated

Table 6-1354. NERROR_MASK Register Field Descriptions

Bit	Field	Type	Reset	Description
31-3	RESERVED	R/W	X	
2-0	mask	R/W	0h	writing 3'b111 will mask the Nerror propagation to pad Writing 3'b000 will unmask the Nerror propagation to pad

6.2.7.433 R5_CONTROL Register (Offset = 800h) [reset = X]

R5_CONTROL is shown in Figure 6-1348 and described in Table 6-1355.

Return to the Summary Table.

Figure 6-1348. R5_CONTROL Register

31	30	29	28	27	26	25	24
RESERVED					rom_wait_state		
R/W-X					R/W-0h		
23	22	21	20	19	18	17	16
RESERVED					reset_fsm_trigger		
R/W-X					R/W-0h		
15	14	13	12	11	10	9	8
RESERVED					lock_step_switch_wait		
R/W-X					R/W-0h		
7	6	5	4	3	2	1	0
RESERVED					lock_step		
R/W-X					R/W-7h		

Table 6-1355. R5_CONTROL Register Field Descriptions

Bit	Field	Type	Reset	Description
31-27	RESERVED	R/W	X	
26-24	rom_wait_state	R/W	0h	writing '111' enables a single cycle wait state with respect to CR5A_clk for rom access. This needs to be set when R5 clock is at 400MHZ and Interconnect-clk is at 200MHZ. (because it is a timing issue in this scenario)
23-19	RESERVED	R/W	X	
18-16	reset_fsm_trigger	R/W	0h	Write pulse bit field: writing 3'b111 will trigger the reset FSM. Reset FSM ensures reset to R5SS and inturn ensures the latching of lock_step and also mem_swap bit
15-11	RESERVED	R/W	X	
10-8	lock_step_switch_wait	R/W	0h	writing 3'b111 ensures switch happens only after R5SS reset. Orelse it will be a immediate switch.
7-3	RESERVED	R/W	X	
2-0	lock_step	R/W	7h	writing 3'b000 ensures R5 to be in Dual-Core mode. Note: The change happens after the R5SS reset assertion if R5_CONTROL_lock_step_switch_wait is set. Or else the switiching to Dual-core happens on the fly.

6.2.7.434 R5_ROM_ECLIPSE Register (Offset = 804h) [reset = X]

R5_ROM_ECLIPSE is shown in Figure 6-1349 and described in Table 6-1356.

Return to the Summary Table.

Copyright © 2025 Texas Instruments Incorporated

Figure 6-1349. R5_ROM_ECLIPSE Register

31	30	29	28	27	26	25	24
RESERVED							
R/W-X							
23	22	21	20	19	18	17	16
RESERVED							
R/W-X							
15	14	13	12	11	10	9	8
RESERVED					memswap_wait		
R/W-X					R/W-0h		
7	6	5	4	3	2	1	0
RESERVED					memswap		
R/W-X					R/W-0h		

Table 6-1356. R5_ROM_ECLIPSE Register Field Descriptions

Bit	Field	Type	Reset	Description
31-11	RESERVED	R/W	X	
10-8	memswap_wait	R/W	0h	writing 3'b111 ensures ROM-Eclipsing happens only after R5SS reset. Orelse it will be a immediate change.
7-3	RESERVED	R/W	X	
2-0	memswap	R/W	0h	writing '111' ensures eclipsing of CR5A_ROM immediately if memswap_wait is not set. If memswap_wait is set then ROM is eclipsed after R5SS reset assertion.

6.2.7.435 R5_COREA_HALT Register (Offset = 808h) [reset = X]

R5_COREA_HALT is shown in Figure 6-1350 and described in Table 6-1357.

Return to the Summary Table.

Figure 6-1350. R5_COREA_HALT Register

31	30	29	28	27	26	25	24	23	22	21	20	19	18	17	16
RESERVED															
R/W-X															
15	14	13	12	11	10	9	8	7	6	5	4	3	2	1	0
RESERVED													halt		
R/W-X													R/W-7h		

Table 6-1357. R5_COREA_HALT Register Field Descriptions

Bit	Field	Type	Reset	Description
31-3	RESERVED	R/W	X	
2-0	halt	R/W	7h	writing '000' will unhalt CR5A. This register should be written only once.

6.2.7.436 R5_COREB_HALT Register (Offset = 80Ch) [reset = X]

R5_COREB_HALT is shown in Figure 6-1351 and described in Table 6-1358.

Return to the Summary Table.

Copyright © 2025 Texas Instruments Incorporated

Figure 6-1351. R5_COREB_HALT Register

31	30	29	28	27	26	25	24	23	22	21	20	19	18	17	16
RESERVED															
R/W-X															
15	14	13	12	11	10	9	8	7	6	5	4	3	2	1	0
RESERVED														halt	
R/W-X														R/W-7h	

Table 6-1358. R5_COREB_HALT Register Field Descriptions

Bit	Field	Type	Reset	Description
31-3	RESERVED	R/W	X	
2-0	halt	R/W	7h	writing '000' will unhalt for CR5B. This register should be written only once.

6.2.7.437 R5_STATUS_REG Register (Offset = 810h) [reset = X]

R5_STATUS_REG is shown in Figure 6-1352 and described in Table 6-1359.

Return to the Summary Table.

Figure 6-1352. R5_STATUS_REG Register

31	30	29	28	27	26	25	24
RESERVED							
R-X							
23	22	21	20	19	18	17	16
RESERVED							
R-X							
15	14	13	12	11	10	9	8
RESERVED							lock_step
R-X							R-0h
7	6	5	4	3	2	1	0
RESERVED							memswap
R-X							R-0h

Table 6-1359. R5_STATUS_REG Register Field Descriptions

Bit	Field	Type	Reset	Description
31-9	RESERVED	R	X	
8	lock_step	R	0h	Reading 1: confirms R5SS is in lockstep mode. Reading 0: confirms R5SS is in Dual-core mode.
7-1	RESERVED	R	X	
0	memswap	R	0h	reading 1: confirms ROM is Eclipsed from with RAM for R5.

6.2.7.438 HW_SPARE_RW0 Register (Offset = FD0h) [reset = 0h]

HW_SPARE_RW0 is shown in Figure 6-1353 and described in Table 6-1360.

Return to the Summary Table.

Figure 6-1353. HW_SPARE_RW0 Register

31	30	29	28	27	26	25	24	23	22	21	20	19	18	17	16	15	14	13	12	11	10	9	8	7	6	5	4	3	2	1	0

Copyright © 2025 Texas Instruments Incorporated

Figure 6-1353. HW_SPARE_RW0 Register (continued)

hw_spare_rw0
R/W-0h

Table 6-1360. HW_SPARE_RW0 Register Field Descriptions

Bit	Field	Type	Reset	Description
31-0	hw_spare_rw0	R/W	0h	Reserved for HW R&D

6.2.7.439 HW_SPARE_RW1 Register (Offset = FD4h) [reset = 0h]

HW_SPARE_RW1 is shown in Figure 6-1354 and described in Table 6-1361.

Return to the Summary Table.

Figure 6-1354. HW_SPARE_RW1 Register

31	30	29	28	27	26	25	24	23	22	21	20	19	18	17	16	15	14	13	12	11	10	9	8	7	6	5	4	3	2	1	0
hw_spare_rw1																															
R/W-0h																															

Table 6-1361. HW_SPARE_RW1 Register Field Descriptions

Bit	Field	Type	Reset	Description
31-0	hw_spare_rw1	R/W	0h	Reserved for HW R&D

6.2.7.440 HW_SPARE_RW2 Register (Offset = FD8h) [reset = 0h]

HW_SPARE_RW2 is shown in Figure 6-1355 and described in Table 6-1362.

Return to the Summary Table.

Figure 6-1355. HW_SPARE_RW2 Register

31	30	29	28	27	26	25	24	23	22	21	20	19	18	17	16	15	14	13	12	11	10	9	8	7	6	5	4	3	2	1	0
hw_spare_rw2																															
R/W-0h																															

Table 6-1362. HW_SPARE_RW2 Register Field Descriptions

Bit	Field	Type	Reset	Description
31-0	hw_spare_rw2	R/W	0h	Reserved for HW R&D

6.2.7.441 HW_SPARE_RW3 Register (Offset = FDCh) [reset = 0h]

HW_SPARE_RW3 is shown in Figure 6-1356 and described in Table 6-1363.

Return to the Summary Table.

Figure 6-1356. HW_SPARE_RW3 Register

31	30	29	28	27	26	25	24	23	22	21	20	19	18	17	16	15	14	13	12	11	10	9	8	7	6	5	4	3	2	1	0
hw_spare_rw3																															
R/W-0h																															

Table 6-1363. HW_SPARE_RW3 Register Field Descriptions

Bit	Field	Type	Reset	Description
31-0	hw_spare_rw3	R/W	0h	Reserved for HW R&D

Copyright © 2025 Texas Instruments Incorporated

6.2.7.442 HW_SPARE_RO0 Register (Offset = FE0h) [reset = 0h]

HW_SPARE_RO0 is shown in Figure 6-1357 and described in Table 6-1364.

Return to the Summary Table.

Figure 6-1357. HW_SPARE_RO0 Register

31	30	29	28	27	26	25	24	23	22	21	20	19	18	17	16	15	14	13	12	11	10	9	8	7	6	5	4	3	2	1	0
hw_spare_ro0																															
R-0h																															

Table 6-1364. HW_SPARE_RO0 Register Field Descriptions

Bit	Field	Type	Reset	Description
31-0	hw_spare_ro0	R	0h	Reserved for HW R&D

6.2.7.443 HW_SPARE_RO1 Register (Offset = FE4h) [reset = 0h]

HW_SPARE_RO1 is shown in Figure 6-1358 and described in Table 6-1365.

Return to the Summary Table.

Figure 6-1358. HW_SPARE_RO1 Register

31	30	29	28	27	26	25	24	23	22	21	20	19	18	17	16	15	14	13	12	11	10	9	8	7	6	5	4	3	2	1	0
hw_spare_ro1																															
R-0h																															

Table 6-1365. HW_SPARE_RO1 Register Field Descriptions

Bit	Field	Type	Reset	Description
31-0	hw_spare_ro1	R	0h	Reserved for HW R&D

6.2.7.444 HW_SPARE_RO2 Register (Offset = FE8h) [reset = 0h]

HW_SPARE_RO2 is shown in Figure 6-1359 and described in Table 6-1366.

Return to the Summary Table.

Figure 6-1359. HW_SPARE_RO2 Register

31	30	29	28	27	26	25	24	23	22	21	20	19	18	17	16	15	14	13	12	11	10	9	8	7	6	5	4	3	2	1	0
hw_spare_ro2																															
R-0h																															

Table 6-1366. HW_SPARE_RO2 Register Field Descriptions

Bit	Field	Type	Reset	Description
31-0	hw_spare_ro2	R	0h	Reserved for HW R&D

6.2.7.445 HW_SPARE_RO3 Register (Offset = FECh) [reset = 0h]

HW_SPARE_RO3 is shown in Figure 6-1360 and described in Table 6-1367.

Return to the Summary Table.

Figure 6-1360. HW_SPARE_RO3 Register

31	30	29	28	27	26	25	24	23	22	21	20	19	18	17	16	15	14	13	12	11	10	9	8	7	6	5	4	3	2	1	0
hw_spare_ro3																															

Copyright © 2025 Texas Instruments Incorporated

Figure 6-1360. HW_SPARE_RO3 Register (continued)

R-0h

Table 6-1367. HW_SPARE_RO3 Register Field Descriptions

Bit	Field	Type	Reset	Description
31-0	hw_spare_ro3	R	0h	Reserved for HW R&D

6.2.7.446 HW_SPARE_WPH Register (Offset = FF0h) [reset = 0h]

HW_SPARE_WPH is shown in Figure 6-1361 and described in Table 6-1368.

Return to the Summary Table.

Figure 6-1361. HW_SPARE_WPH Register

31	30	29	28	27	26	25	24	23	22	21	20	19	18	17	16	15	14	13	12	11	10	9	8	7	6	5	4	3	2	1	0
proc																															
R/W-0h																															

Table 6-1368. HW_SPARE_WPH Register Field Descriptions

Bit	Field	Type	Reset	Description
31-0	proc	R/W	0h	Write pulse bit field: For bits 0 to 7: Wrting 1'b1 : Generates pulse interrupt to corresponding proc from MSS_CR5A. For bits 8 to 15: Wrting 1'b1 : Generates pulse interrupt to corresponding proc from MSS_CR5B.

6.2.7.447 HW_SPARE_REC Register (Offset = FF4h) [reset = 0h]

HW_SPARE_REC is shown in Figure 6-1362 and described in Table 6-1369.

Return to the Summary Table.

Figure 6-1362. HW_SPARE_REC Register

31	30	29	28	27	26	25	24
hw_spare_rec31	hw_spare_rec30	hw_spare_rec29	hw_spare_rec28	hw_spare_rec27	hw_spare_rec26	hw_spare_rec25	hw_spare_rec24
R/W-0h	R/W-0h	R/W-0h	R/W-0h	R/W-0h	R/W-0h	R/W-0h	R/W-0h
23	22	21	20	19	18	17	16
hw_spare_rec23	hw_spare_rec22	hw_spare_rec21	hw_spare_rec20	hw_spare_rec19	hw_spare_rec18	hw_spare_rec17	hw_spare_rec16
R/W-0h	R/W-0h	R/W-0h	R/W-0h	R/W-0h	R/W-0h	R/W-0h	R/W-0h
15	14	13	12	11	10	9	8
hw_spare_rec15	hw_spare_rec14	hw_spare_rec13	hw_spare_rec12	hw_spare_rec11	hw_spare_rec10	hw_spare_rec9	hw_spare_rec8
R/W-0h	R/W-0h	R/W-0h	R/W-0h	R/W-0h	R/W-0h	R/W-0h	R/W-0h
7	6	5	4	3	2	1	0
hw_spare_rec7	hw_spare_rec6	hw_spare_rec5	hw_spare_rec4	hw_spare_rec3	hw_spare_rec2	hw_spare_rec1	hw_spare_rec0
R/W-0h	R/W-0h	R/W-0h	R/W-0h	R/W-0h	R/W-0h	R/W-0h	R/W-0h

Table 6-1369. HW_SPARE_REC Register Field Descriptions

Bit	Field	Type	Reset	Description
31	hw_spare_rec31	R/W	0h	Reserved for HW R&D
30	hw_spare_rec30	R/W	0h	Reserved for HW R&D

Copyright © 2025 Texas Instruments Incorporated

Table 6-1369. HW_SPARE_REC Register Field Descriptions (continued)

Bit	Field	Type	Reset	Description
29	hw_spare_rec29	R/W	0h	Reserved for HW R&D
28	hw_spare_rec28	R/W	0h	Reserved for HW R&D
27	hw_spare_rec27	R/W	0h	Reserved for HW R&D
26	hw_spare_rec26	R/W	0h	Reserved for HW R&D
25	hw_spare_rec25	R/W	0h	Reserved for HW R&D
24	hw_spare_rec24	R/W	0h	Reserved for HW R&D
23	hw_spare_rec23	R/W	0h	Reserved for HW R&D
22	hw_spare_rec22	R/W	0h	Reserved for HW R&D
21	hw_spare_rec21	R/W	0h	Reserved for HW R&D
20	hw_spare_rec20	R/W	0h	Reserved for HW R&D
19	hw_spare_rec19	R/W	0h	Reserved for HW R&D
18	hw_spare_rec18	R/W	0h	Reserved for HW R&D
17	hw_spare_rec17	R/W	0h	Reserved for HW R&D
16	hw_spare_rec16	R/W	0h	Reserved for HW R&D
15	hw_spare_rec15	R/W	0h	Reserved for HW R&D
14	hw_spare_rec14	R/W	0h	Reserved for HW R&D
13	hw_spare_rec13	R/W	0h	Reserved for HW R&D
12	hw_spare_rec12	R/W	0h	Reserved for HW R&D
11	hw_spare_rec11	R/W	0h	Reserved for HW R&D
10	hw_spare_rec10	R/W	0h	Reserved for HW R&D
9	hw_spare_rec9	R/W	0h	Reserved for HW R&D
8	hw_spare_rec8	R/W	0h	Reserved for HW R&D
7	hw_spare_rec7	R/W	0h	Reserved for HW R&D
6	hw_spare_rec6	R/W	0h	Reserved for HW R&D
5	hw_spare_rec5	R/W	0h	Reserved for HW R&D
4	hw_spare_rec4	R/W	0h	Reserved for HW R&D
3	hw_spare_rec3	R/W	0h	Reserved for HW R&D
2	hw_spare_rec2	R/W	0h	Reserved for HW R&D
1	hw_spare_rec1	R/W	0h	Reserved for HW R&D
0	hw_spare_rec0	R/W	0h	Reserved for HW R&D

6.2.7.448 LOCK0_KICK0 Register (Offset = 1008h) [reset = 0h]

LOCK0_KICK0 is shown in Figure 6-1363 and described in Table 6-1370.

Return to the Summary Table.

- KICK0 component

Figure 6-1363. LOCK0_KICK0 Register

31	30	29	28	27	26	25	24	23	22	21	20	19	18	17	16	15	14	13	12	11	10	9	8	7	6	5	4	3	2	1	0
LOCK0_kick0																															
R/W-0h																															

Table 6-1370. LOCK0_KICK0 Register Field Descriptions

Bit	Field	Type	Reset	Description
31-0	LOCK0_kick0	R/W	0h	- KICK0 component

Copyright © 2025 Texas Instruments Incorporated

6.2.7.449 LOCK0_KICK1 Register (Offset = 100Ch) [reset = 0h]

LOCK0_KICK1 is shown in Figure 6-1364 and described in Table 6-1371.

Return to the Summary Table.

- KICK1 component

Figure 6-1364. LOCK0_KICK1 Register

31	30	29	28	27	26	25	24	23	22	21	20	19	18	17	16	15	14	13	12	11	10	9	8	7	6	5	4	3	2	1	0
LOCK0_kick1																															
R/W-0h																															

Table 6-1371. LOCK0_KICK1 Register Field Descriptions

Bit	Field	Type	Reset	Description
31-0	LOCK0_kick1	R/W	0h	- KICK1 component

6.2.7.450 intr_raw_status Register (Offset = 1010h) [reset = X]

intr_raw_status is shown in Figure 6-1365 and described in Table 6-1372.

Return to the Summary Table.

Interrupt Raw Status/Set Register

Figure 6-1365. intr_raw_status Register

31	30	29	28	27	26	25	24
RESERVED							
R/W-X							
23	22	21	20	19	18	17	16
RESERVED							
R/W-X							
15	14	13	12	11	10	9	8
RESERVED							
R/W-X							
7	6	5	4	3	2	1	0
RESERVED				proxy_err	kick_err	addr_err	prot_err
R/W-X				R/W1S-0h	R/W1S-0h	R/W1S-0h	R/W1S-0h

Table 6-1372. intr_raw_status Register Field Descriptions

Bit	Field	Type	Reset	Description
31-4	RESERVED	R/W	X	
3	proxy_err	R/W1S	0h	Proxy0 access violation error. Raw status is read. Write a 1 to set the status. Writing a 0 has no effect.
2	kick_err	R/W1S	0h	Kick access violation error. Raw status is read. Write a 1 to set the status. Writing a 0 has no effect.
1	addr_err	R/W1S	0h	Addressing violation error. Raw status is read. Write a 1 to set the status. Writing a 0 has no effect.
0	prot_err	R/W1S	0h	Protection violation error. Raw status is read. Write a 1 to set the status. Writing a 0 has no effect.

Copyright © 2025 Texas Instruments Incorporated

6.2.7.451 intr_enabled_status_clear Register (Offset = 1014h) [reset = X]

intr_enabled_status_clear is shown in Figure 6-1366 and described in Table 6-1373.

Return to the Summary Table.

Interrupt Enabled Status/Clear register

Figure 6-1366. intr_enabled_status_clear Register

31	30	29	28	27	26	25	24
RESERVED							
R/W-X							
23	22	21	20	19	18	17	16
RESERVED							
R/W-X							
15	14	13	12	11	10	9	8
RESERVED							
R/W-X							
7	6	5	4	3	2	1	0
RESERVED				enabled_proxy_err	enabled_kick_err	enabled_addr_err	enabled_prot_err
R/W-X				R/W1C-0h	R/W1C-0h	R/W1C-0h	R/W1C-0h

Table 6-1373. intr_enabled_status_clear Register Field Descriptions

Bit	Field	Type	Reset	Description
31-4	RESERVED	R/W	X	
3	enabled_proxy_err	R/W1C	0h	Proxy0 access violation error. Enabled status is read. Write a 1 to clear the status. Writing a 0 has no effect.
2	enabled_kick_err	R/W1C	0h	Kick access violation error. Enabled status is read. Write a 1 to clear the status. Writing a 0 has no effect.
1	enabled_addr_err	R/W1C	0h	Addressing violation error. Enabled status is read. Write a 1 to clear the status. Writing a 0 has no effect.
0	enabled_prot_err	R/W1C	0h	Protection violation error. Enabled status is read. Write a 1 to clear the status. Writing a 0 has no effect.

6.2.7.452 intr_enable Register (Offset = 1018h) [reset = X]

intr_enable is shown in Figure 6-1367 and described in Table 6-1374.

Return to the Summary Table.

Interrupt Enable register

Figure 6-1367. intr_enable Register

31	30	29	28	27	26	25	24
RESERVED							
R/W-X							
23	22	21	20	19	18	17	16
RESERVED							
R/W-X							
15	14	13	12	11	10	9	8
RESERVED							

Copyright © 2025 Texas Instruments Incorporated

Figure 6-1367. intr_enable Register (continued)

R/W-X							
7	6	5	4	3	2	1	0
RESERVED				proxy_err_en	kick_err_en	addr_err_en	prot_err_en
R/W-X				R/W1S-0h	R/W1S-0h	R/W1S-0h	R/W1S-0h

Table 6-1374. intr_enable Register Field Descriptions

Bit	Field	Type	Reset	Description
31-4	RESERVED	R/W	X	
3	proxy_err_en	R/W1S	0h	Proxy0 access violation error enable. Write a 1 to set the enable. Writing a 0 has no effect.
2	kick_err_en	R/W1S	0h	Kick access violation error enable. Write a 1 to set the enable. Writing a 0 has no effect.
1	addr_err_en	R/W1S	0h	Addressing violation error enable. Write a 1 to set the enable. Writing a 0 has no effect.
0	prot_err_en	R/W1S	0h	Protection violation error enable. Write a 1 to set the enable. Writing a 0 has no effect.

6.2.7.453 intr_enable_clear Register (Offset = 101Ch) [reset = X]

intr_enable_clear is shown in Figure 6-1368 and described in Table 6-1375.

Return to the Summary Table.

Interrupt Enable Clear register

Figure 6-1368. intr_enable_clear Register

31	30	29	28	27	26	25	24
RESERVED							
R/W-X							
23	22	21	20	19	18	17	16
RESERVED							
R/W-X							
15	14	13	12	11	10	9	8
RESERVED							
R/W-X							
7	6	5	4	3	2	1	0
RESERVED				proxy_err_en_clr	kick_err_en_clr	addr_err_en_clr	prot_err_en_clr
R/W-X				R/W1C-0h	R/W1C-0h	R/W1C-0h	R/W1C-0h

Table 6-1375. intr_enable_clear Register Field Descriptions

Bit	Field	Type	Reset	Description
31-4	RESERVED	R/W	X	
3	proxy_err_en_clr	R/W1C	0h	Proxy0 access violation error enable clear. Write a 1 to clear the enable. Writing a 0 has no effect.
2	kick_err_en_clr	R/W1C	0h	Kick access violation error enable clear. Write a 1 to clear the enable. Writing a 0 has no effect.
1	addr_err_en_clr	R/W1C	0h	Addressing violation error enable clear. Write a 1 to clear the enable. Writing a 0 has no effect.

Copyright © 2025 Texas Instruments Incorporated

Table 6-1375. intr_enable_clear Register Field Descriptions (continued)

Bit	Field	Type	Reset	Description
0	prot_err_en_clr	R/W1C	0h	Protection violation error enable clear. Write a 1 to clear the enable. Writing a 0 has no effect.

6.2.7.454 eoi Register (Offset = 1020h) [reset = X]

eoi is shown in Figure 6-1369 and described in Table 6-1376.

Return to the Summary Table.

EOI register

Figure 6-1369. eoi Register

31	30	29	28	27	26	25	24	23	22	21	20	19	18	17	16
RESERVED															
R/W-X															
15	14	13	12	11	10	9	8	7	6	5	4	3	2	1	0
RESERVED								eoi_vector							
R/W-X								R/W-0h							

Table 6-1376. eoi Register Field Descriptions

Bit	Field	Type	Reset	Description
31-8	RESERVED	R/W	X	
7-0	eoi_vector	R/W	0h	EOI vector value. Write this with interrupt distribution value in the chip.

6.2.7.455 fault_address Register (Offset = 1024h) [reset = 0h]

fault_address is shown in Figure 6-1370 and described in Table 6-1377.

Return to the Summary Table.

Fault Address register

Figure 6-1370. fault_address Register

31	30	29	28	27	26	25	24	23	22	21	20	19	18	17	16	15	14	13	12	11	10	9	8	7	6	5	4	3	2	1	0
fault_addr																															
R-0h																															

Table 6-1377. fault_address Register Field Descriptions

Bit	Field	Type	Reset	Description
31-0	fault_addr	R	0h	Fault Address.

6.2.7.456 fault_type_status Register (Offset = 1028h) [reset = X]

fault_type_status is shown in Figure 6-1371 and described in Table 6-1378.

Return to the Summary Table.

Fault Type Status register

Figure 6-1371. fault_type_status Register

31	30	29	28	27	26	25	24

Copyright © 2025 Texas Instruments Incorporated

Figure 6-1371. fault_type_status Register (continued)

RESERVED							
R-X							
23	22	21	20	19	18	17	16
RESERVED							
R-X							
15	14	13	12	11	10	9	8
RESERVED							
R-X							
7	6	5	4	3	2	1	0
RESERVED	fault_ns	fault_type					
R-X	R-0h	R-0h					

Table 6-1378. fault_type_status Register Field Descriptions

Bit	Field	Type	Reset	Description
31-7	RESERVED	R	X	
6	fault_ns	R	0h	Non-secure access.
5-0	fault_type	R	0h	Fault Type 10_0000 = Supervisor read fault - priv = 1 dir = 1 dtype ! = 1 01_0000 = Supervisor write fault - priv = 1 dir = 0 00_1000 = Supervisor execute fault - priv = 1 dir = 1 dtype = 1 00_0100 = User read fault - priv = 0 dir = 1 dtype = 1 00_0010 = User write fault - priv = 0 dir = 0 00_0001 = User execute fault - priv = 0 dir = 1 dtype = 1 00_0000 = No fault

6.2.7.457 fault_attr_status Register (Offset = 102Ch) [reset = 0h]

fault_attr_status is shown in Figure 6-1372 and described in Table 6-1379.

Return to the Summary Table.

Fault Attribute Status register

Figure 6-1372. fault_attr_status Register

31	30	29	28	27	26	25	24	23	22	21	20	19	18	17	16
fault_xid												fault_routeid			
R-0h												R-0h			
15	14	13	12	11	10	9	8	7	6	5	4	3	2	1	0
fault_routeid								fault_privid							
R-0h								R-0h							

Table 6-1379. fault_attr_status Register Field Descriptions

Bit	Field	Type	Reset	Description
31-20	fault_xid	R	0h	XID.
19-8	fault_routeid	R	0h	Route ID.
7-0	fault_privid	R	0h	Privilege ID.

6.2.7.458 fault_clear Register (Offset = 1030h) [reset = X]

fault_clear is shown in Figure 6-1373 and described in Table 6-1380.

Copyright © 2025 Texas Instruments Incorporated

Return to the Summary Table.

Fault Clear register

Figure 6-1373. fault_clear Register

31	30	29	28	27	26	25	24
RESERVED							
W-X							
23	22	21	20	19	18	17	16
RESERVED							
W-X							
15	14	13	12	11	10	9	8
RESERVED							
W-X							
7	6	5	4	3	2	1	0
RESERVED							fault_clr
W-X							W-0h

Table 6-1380. fault_clear Register Field Descriptions

Bit	Field	Type	Reset	Description
31-1	RESERVED	W	X	
0	fault_clr	W	0h	Fault clear. Writing a 1 clears the current fault. Writing a 0 has no effect.

Copyright © 2025 Texas Instruments Incorporated

6.2.8 RCSS_CTRL_memory_map Registers

Table 6-1381 lists the RCSS_CTRL_memory_map registers. All register offset addresses not listed in Table 6-1381 should be considered as reserved locations and the register contents should not be modified.

Table 6-1381. RCSS_CTRL_MEMORY_MAP Registers

Offset	Acronym	Register Name	Section
0h	PID	PID register	PID
8h	RCSS_TPCC_A_ERRAGG_MASK		RCSS_TPCC_A_ERRAGG_MASK
Ch	RCSS_TPCC_A_ERRAGG_STATUS		RCSS_TPCC_A_ERRAGG_STATUS
10h	RCSS_TPCC_A_ERRAGG_STATUS_RAW		RCSS_TPCC_A_ERRAGG_STATUS_RAW
14h	RCSS_TPCC_A_INTAGG_MASK		RCSS_TPCC_A_INTAGG_MASK
18h	RCSS_TPCC_A_INTAGG_STATUS		RCSS_TPCC_A_INTAGG_STATUS
1Ch	RCSS_TPCC_A_INTAGG_STATUS_RAW		RCSS_TPCC_A_INTAGG_STATUS_RAW
20h	RCSS_SPI_TRIG_SRC		RCSS_SPI_TRIG_SRC
24h	RCSS_SPIA_MEMINIT		RCSS_SPIA_MEMINIT
28h	RCSS_SPIA_MEMINIT_DONE		RCSS_SPIA_MEMINIT_DONE
2Ch	RCSS_SPIA_MEMINIT_STATUS		RCSS_SPIA_MEMINIT_STATUS
30h	RCSS_SPIB_MEMINIT		RCSS_SPIB_MEMINIT
34h	RCSS_SPIB_MEMINIT_DONE		RCSS_SPIB_MEMINIT_DONE
38h	RCSS_SPIB_MEMINIT_STATUS		RCSS_SPIB_MEMINIT_STATUS
3Ch	RCSS_TPCC_MEMINIT_START		RCSS_TPCC_MEMINIT_START
40h	RCSS_TPCC_MEMINIT_DONE		RCSS_TPCC_MEMINIT_DONE
44h	RCSS_TPCC_MEMINIT_STATUS		RCSS_TPCC_MEMINIT_STATUS
48h	RCSS_SPIA_CFG		RCSS_SPIA_CFG
4Ch	RCSS_SPIB_CFG		RCSS_SPIB_CFG
50h	RCSS_SPIA_IOCFG		RCSS_SPIA_IOCFG
54h	RCSS_SPIB_IOCFG		RCSS_SPIB_IOCFG
58h	RCSS_SPI_HOST_IRQ		RCSS_SPI_HOST_IRQ
5Ch	TPTC_DBS_CFG		TPTC_DBS_CFG
60h	RCSS_TPCC_A_PARITY_CTRL		RCSS_TPCC_A_PARITY_CTRL
64h	RCSS_TPCC_A_PARITY_STATUS		RCSS_TPCC_A_PARITY_STATUS

Copyright © 2025 Texas Instruments Incorporated

Table 6-1381. RCSS_CTRL_MEMORY_MAP Registers (continued)

Offset	Acronym	Register Name	Section
68h	RCSS_CSI2A_CFG		RCSS_CSI2A_CFG
6Ch	RCSS_CSI2B_CFG		RCSS_CSI2B_CFG
70h	RCSS_CSI2A_CTX0_LINE_PING_PONG		RCSS_CSI2A_CTX0_LINE_PING_PONG
74h	RCSS_CSI2A_CTX1_LINE_PING_PONG		RCSS_CSI2A_CTX1_LINE_PING_PONG
78h	RCSS_CSI2A_CTX2_LINE_PING_PONG		RCSS_CSI2A_CTX2_LINE_PING_PONG
7Ch	RCSS_CSI2A_CTX3_LINE_PING_PONG		RCSS_CSI2A_CTX3_LINE_PING_PONG
80h	RCSS_CSI2A_CTX4_LINE_PING_PONG		RCSS_CSI2A_CTX4_LINE_PING_PONG
84h	RCSS_CSI2A_CTX5_LINE_PING_PONG		RCSS_CSI2A_CTX5_LINE_PING_PONG
88h	RCSS_CSI2A_CTX6_LINE_PING_PONG		RCSS_CSI2A_CTX6_LINE_PING_PONG
8Ch	RCSS_CSI2A_CTX7_LINE_PING_PONG		RCSS_CSI2A_CTX7_LINE_PING_PONG
90h	RCSS_CSI2A_PARITY_CTRL		RCSS_CSI2A_PARITY_CTRL
94h	RCSS_CSI2A_PARITY_STATUS		RCSS_CSI2A_PARITY_STATUS
98h	RCSS_CSI2B_CTX0_LINE_PING_PONG		RCSS_CSI2B_CTX0_LINE_PING_PONG
9Ch	RCSS_CSI2B_CTX1_LINE_PING_PONG		RCSS_CSI2B_CTX1_LINE_PING_PONG
A0h	RCSS_CSI2B_CTX2_LINE_PING_PONG		RCSS_CSI2B_CTX2_LINE_PING_PONG
A4h	RCSS_CSI2B_CTX3_LINE_PING_PONG		RCSS_CSI2B_CTX3_LINE_PING_PONG
A8h	RCSS_CSI2B_CTX4_LINE_PING_PONG		RCSS_CSI2B_CTX4_LINE_PING_PONG
ACh	RCSS_CSI2B_CTX5_LINE_PING_PONG		RCSS_CSI2B_CTX5_LINE_PING_PONG
B0h	RCSS_CSI2B_CTX6_LINE_PING_PONG		RCSS_CSI2B_CTX6_LINE_PING_PONG
B4h	RCSS_CSI2B_CTX7_LINE_PING_PONG		RCSS_CSI2B_CTX7_LINE_PING_PONG
B8h	RCSS_CSI2B_PARITY_CTRL		RCSS_CSI2B_PARITY_CTRL

Copyright © 2025 Texas Instruments Incorporated

Table 6-1381. RCSS_CTRL_MEMORY_MAP Registers (continued)

Offset	Acronym	Register Name	Section
BCh	RCSS_CSI2B_PARITY_STATUS		RCSS_CSI2B_PARITY_STATUS
C0h	RCSS_CSI2A_LANE0_CFG		RCSS_CSI2A_LANE0_CFG
C4h	RCSS_CSI2A_LANE1_CFG		RCSS_CSI2A_LANE1_CFG
C8h	RCSS_CSI2A_LANE2_CFG		RCSS_CSI2A_LANE2_CFG
CCh	RCSS_CSI2A_LANE3_CFG		RCSS_CSI2A_LANE3_CFG
D0h	RCSS_CSI2A_LANE4_CFG		RCSS_CSI2A_LANE4_CFG
D4h	RCSS_CSI2B_LANE0_CFG		RCSS_CSI2B_LANE0_CFG
D8h	RCSS_CSI2B_LANE1_CFG		RCSS_CSI2B_LANE1_CFG
DCh	RCSS_CSI2B_LANE2_CFG		RCSS_CSI2B_LANE2_CFG
E0h	RCSS_CSI2B_LANE3_CFG		RCSS_CSI2B_LANE3_CFG
E4h	RCSS_CSI2B_LANE4_CFG		RCSS_CSI2B_LANE4_CFG
E8h	RCSS_CSI2A_FIFO_MEMINIT		RCSS_CSI2A_FIFO_MEMINIT
ECh	RCSS_CSI2A_FIFO_MEMINIT_DONE		RCSS_CSI2A_FIFO_MEMINIT_DONE
F0h	RCSS_CSI2A_FIFO_MEMINIT_STATUS		RCSS_CSI2A_FIFO_MEMINIT_STATUS
F4h	RCSS_CSI2A_CTX_MEMINIT		RCSS_CSI2A_CTX_MEMINIT
F8h	RCSS_CSI2A_CTX_MEMINIT_DONE		RCSS_CSI2A_CTX_MEMINIT_DONE
FCh	RCSS_CSI2A_CTX_MEMINIT_STATUS		RCSS_CSI2A_CTX_MEMINIT_STATUS
100h	RCSS_CSI2B_FIFO_MEMINIT		RCSS_CSI2B_FIFO_MEMINIT
104h	RCSS_CSI2B_FIFO_MEMINIT_DONE		RCSS_CSI2B_FIFO_MEMINIT_DONE
108h	RCSS_CSI2B_FIFO_MEMINIT_STATUS		RCSS_CSI2B_FIFO_MEMINIT_STATUS
10Ch	RCSS_CSI2B_CTX_MEMINIT		RCSS_CSI2B_CTX_MEMINIT
110h	RCSS_CSI2B_CTX_MEMINIT_DONE		RCSS_CSI2B_CTX_MEMINIT_DONE
114h	RCSS_CSI2B_CTX_MEMINIT_STATUS		RCSS_CSI2B_CTX_MEMINIT_STATUS
118h	RCSS_BUS_SAFETY_CTRL		RCSS_BUS_SAFETY_CTRL
11Ch	RCSS_BUS_SAFETY_SEC_ERR_STAT0		RCSS_BUS_SAFETY_SEC_ERR_STAT0
120h	RCSS_TPTCA0_RD_BUS_SAFETY_CTRL		RCSS_TPTCA0_RD_BUS_SAFETY_CTRL

Copyright © 2025 Texas Instruments Incorporated

Table 6-1381. RCSS_CTRL_MEMORY_MAP Registers (continued)

Offset	Acronym	Register Name	Section
124h	RCSS_TPTCA0_RD_BUS_SAFETY_FI		RCSS_TPTCA0_RD_BUS_SAFETY_FI
128h	RCSS_TPTCA0_RD_BUS_SAFETY_ERR		RCSS_TPTCA0_RD_BUS_SAFETY_ERR
12Ch	RCSS_TPTCA0_RD_BUS_SAFETY_ERR_STAT_DATA0		RCSS_TPTCA0_RD_BUS_SAFETY_ERR_STAT_DATA0
130h	RCSS_TPTCA0_RD_BUS_SAFETY_ERR_STAT_CMD		RCSS_TPTCA0_RD_BUS_SAFETY_ERR_STAT_CM
134h	RCSS_TPTCA0_RD_BUS_SAFETY_ERR_STAT_READ		RCSS_TPTCA0_RD_BUS_SAFETY_ERR_STAT_READ
138h	RCSS_TPTCA1_RD_BUS_SAFETY_CTRL		RCSS_TPTCA1_RD_BUS_SAFETY_CTRL
13Ch	RCSS_TPTCA1_RD_BUS_SAFETY_FI		RCSS_TPTCA1_RD_BUS_SAFETY_FI
140h	RCSS_TPTCA1_RD_BUS_SAFETY_ERR		RCSS_TPTCA1_RD_BUS_SAFETY_ERR
144h	RCSS_TPTCA1_RD_BUS_SAFETY_ERR_STAT_DATA0		RCSS_TPTCA1_RD_BUS_SAFETY_ERR_STAT_DATA0
148h	RCSS_TPTCA1_RD_BUS_SAFETY_ERR_STAT_CMD		RCSS_TPTCA1_RD_BUS_SAFETY_ERR_STAT_CMD
14Ch	RCSS_TPTCA1_RD_BUS_SAFETY_ERR_STAT_READ		RCSS_TPTCA1_RD_BUS_SAFETY_ERR_STAT_READ
150h	RCSS_TPTCA0_WR_BUS_SAFETY_CTRL		RCSS_TPTCA0_WR_BUS_SAFETY_CTRL
154h	RCSS_TPTCA0_WR_BUS_SAFETY_FI		RCSS_TPTCA0_WR_BUS_SAFETY_FI
158h	RCSS_TPTCA0_WR_BUS_SAFETY_ERR		RCSS_TPTCA0_WR_BUS_SAFETY_ERR
15Ch	RCSS_TPTCA0_WR_BUS_SAFETY_ERR_STAT_DATA0		RCSS_TPTCA0_WR_BUS_SAFETY_ERR_STAT_DATA0
160h	RCSS_TPTCA0_WR_BUS_SAFETY_ERR_STAT_CMD		RCSS_TPTCA0_WR_BUS_SAFETY_ERR_STAT_CMD
164h	RCSS_TPTCA0_WR_BUS_SAFETY_ERR_STAT_WRITE		RCSS_TPTCA0_WR_BUS_SAFETY_ERR_STAT_WRITE
168h	RCSS_TPTCA0_WR_BUS_SAFETY_ERR_STAT_WRITERESP		RCSS_TPTCA0_WR_BUS_SAFETY_ERR_STAT_WRITERESP
16Ch	RCSS_TPTCA1_WR_BUS_SAFETY_CTRL		RCSS_TPTCA1_WR_BUS_SAFETY_CTRL

Copyright © 2025 Texas Instruments Incorporated

Table 6-1381. RCSS_CTRL_MEMORY_MAP Registers (continued)

Offset	Acronym	Register Name	Section
170h	RCSS_TPTCA1_WR_BUS_SAFETY_FI		RCSS_TPTCA1_WR_BUS_SAFETY_FI
174h	RCSS_TPTCA1_WR_BUS_SAFETY_ERR		RCSS_TPTCA1_WR_BUS_SAFETY_ERR
178h	RCSS_TPTCA1_WR_BUS_SAFETY_ERR_STAT_DATA0		RCSS_TPTCA1_WR_BUS_SAFETY_ERR_STAT_DATA0
17Ch	RCSS_TPTCA1_WR_BUS_SAFETY_ERR_STAT_CMD		RCSS_TPTCA1_WR_BUS_SAFETY_ERR_STAT_CMD
180h	RCSS_TPTCA1_WR_BUS_SAFETY_ERR_STAT_WRITE		RCSS_TPTCA1_WR_BUS_SAFETY_ERR_STAT_WRITE
184h	RCSS_TPTCA1_WR_BUS_SAFETY_ERR_STAT_WRITERESP		RCSS_TPTCA1_WR_BUS_SAFETY_ERR_STAT_WRITERESP
188h	RCSS_CSI2A_MDMA_BUS_SAFETY_CTRL		RCSS_CSI2A_MDMA_BUS_SAFETY_CTRL
18Ch	RCSS_CSI2A_MDMA_BUS_SAFETY_FI		RCSS_CSI2A_MDMA_BUS_SAFETY_FI
190h	RCSS_CSI2A_MDMA_BUS_SAFETY_ERR		RCSS_CSI2A_MDMA_BUS_SAFETY_ERR
194h	RCSS_CSI2A_MDMA_BUS_SAFETY_ERR_STAT_DATA0		RCSS_CSI2A_MDMA_BUS_SAFETY_ERR_STAT_DATA0
198h	RCSS_CSI2A_MDMA_BUS_SAFETY_ERR_STAT_CMD		RCSS_CSI2A_MDMA_BUS_SAFETY_ERR_STAT_CMD
19Ch	RCSS_CSI2A_MDMA_BUS_SAFETY_ERR_STAT_WRITE		RCSS_CSI2A_MDMA_BUS_SAFETY_ERR_STAT_WRITE
1A0h	RCSS_CSI2A_MDMA_BUS_SAFETY_ERR_STAT_READ		RCSS_CSI2A_MDMA_BUS_SAFETY_ERR_STAT_READ
1A4h	RCSS_CSI2A_MDMA_BUS_SAFETY_ERR_STAT_WRITERESP		RCSS_CSI2A_MDMA_BUS_SAFETY_ERR_STAT_WRITERESP
1A8h	RCSS_CSI2B_MDMA_BUS_SAFETY_CTRL		RCSS_CSI2B_MDMA_BUS_SAFETY_CTRL
1ACh	RCSS_CSI2B_MDMA_BUS_SAFETY_FI		RCSS_CSI2B_MDMA_BUS_SAFETY_FI
1B0h	RCSS_CSI2B_MDMA_BUS_SAFETY_ERR		RCSS_CSI2B_MDMA_BUS_SAFETY_ERR
1B4h	RCSS_CSI2B_MDMA_BUS_SAFETY_ERR_STAT_DATA0		RCSS_CSI2B_MDMA_BUS_SAFETY_ERR_STAT_DATA0
1B8h	RCSS_CSI2B_MDMA_BUS_SAFETY_ERR_STAT_CMD		RCSS_CSI2B_MDMA_BUS_SAFETY_ERR_STAT_CMD

Copyright © 2025 Texas Instruments Incorporated

Table 6-1381. RCSS_CTRL_MEMORY_MAP Registers (continued)

Offset	Acronym	Register Name	Section
1BCh	RCSS_CSI2B_MDMA_BUS_SAFETY_ERR_STAT_WRITE		RCSS_CSI2B_MDMA_BUS_SAFETY_ERR_STAT_WRITE
1C0h	RCSS_CSI2B_MDMA_BUS_SAFETY_ERR_STAT_READ		RCSS_CSI2B_MDMA_BUS_SAFETY_ERR_STAT_READ
1C4h	RCSS_CSI2B_MDMA_BUS_SAFETY_ERR_STAT_WRITERESP		RCSS_CSI2B_MDMA_BUS_SAFETY_ERR_STAT_WRITERESP
1C8h	RCSS_PCR_BUS_SAFETY_CTRL		RCSS_PCR_BUS_SAFETY_CTRL
1CCh	RCSS_PCR_BUS_SAFETY_FI		RCSS_PCR_BUS_SAFETY_FI
1D0h	RCSS_PCR_BUS_SAFETY_ERR		RCSS_PCR_BUS_SAFETY_ERR
1D4h	RCSS_PCR_BUS_SAFETY_ERR_STAT_DATA0		RCSS_PCR_BUS_SAFETY_ERR_STAT_DATA0
1D8h	RCSS_PCR_BUS_SAFETY_ERR_STAT_CMD		RCSS_PCR_BUS_SAFETY_ERR_STAT_CMD
1DCh	RCSS_PCR_BUS_SAFETY_ERR_STAT_WRITE		RCSS_PCR_BUS_SAFETY_ERR_STAT_WRITE
1E0h	RCSS_PCR_BUS_SAFETY_ERR_STAT_READ		RCSS_PCR_BUS_SAFETY_ERR_STAT_READ
1E4h	RCSS_PCR_BUS_SAFETY_ERR_STAT_WRITERESP		RCSS_PCR_BUS_SAFETY_ERR_STAT_WRITERESP
1E8h	RCSS_MCASPA_BUS_SAFETY_CTRL		RCSS_MCASPA_BUS_SAFETY_CTRL
1ECh	RCSS_MCASPA_BUS_SAFETY_FI		RCSS_MCASPA_BUS_SAFETY_FI
1F0h	RCSS_MCASPA_BUS_SAFETY_ERR		RCSS_MCASPA_BUS_SAFETY_ERR
1F4h	RCSS_MCASPA_BUS_SAFETY_ERR_STAT_DATA0		RCSS_MCASPA_BUS_SAFETY_ERR_STAT_DATA0
1F8h	RCSS_MCASPA_BUS_SAFETY_ERR_STAT_CMD		RCSS_MCASPA_BUS_SAFETY_ERR_STAT_CMD
1FCh	RCSS_MCASPA_BUS_SAFETY_ERR_STAT_WRITE		RCSS_MCASPA_BUS_SAFETY_ERR_STAT_WRITE
200h	RCSS_MCASPA_BUS_SAFETY_ERR_STAT_READ		RCSS_MCASPA_BUS_SAFETY_ERR_STAT_READ
204h	RCSS_MCASPA_BUS_SAFETY_ERR_STAT_WRITERESP		RCSS_MCASPA_BUS_SAFETY_ERR_STAT_WRITERESP
208h	RCSS_MCASPB_BUS_SAFETY_CTRL		RCSS_MCASPB_BUS_SAFETY_CTRL
20Ch	RCSS_MCASPB_BUS_SAFETY_FI		RCSS_MCASPB_BUS_SAFETY_FI

Copyright © 2025 Texas Instruments Incorporated

Table 6-1381. RCSS_CTRL_MEMORY_MAP Registers (continued)

Offset	Acronym	Register Name	Section
210h	RCSS_MCASPB_BUS_SAFETY_ERR		RCSS_MCASPB_BUS_SAFETY_ERR
214h	RCSS_MCASPB_BUS_SAFETY_ERR_STAT_DATA0		RCSS_MCASPB_BUS_SAFETY_ERR_STAT_DATA0
218h	RCSS_MCASPB_BUS_SAFETY_ERR_STAT_CMD		RCSS_MCASPB_BUS_SAFETY_ERR_STAT_CMD
21Ch	RCSS_MCASPB_BUS_SAFETY_ERR_STAT_WRITE		RCSS_MCASPB_BUS_SAFETY_ERR_STAT_WRITE
220h	RCSS_MCASPB_BUS_SAFETY_ERR_STAT_READ		RCSS_MCASPB_BUS_SAFETY_ERR_STAT_READ
224h	RCSS_MCASPB_BUS_SAFETY_ERR_STAT_WRITERESP		RCSS_MCASPB_BUS_SAFETY_ERR_STAT_WRITERESP
228h	RCSS_MCASPC_BUS_SAFETY_CTRL		RCSS_MCASPC_BUS_SAFETY_CTRL
22Ch	RCSS_MCASPC_BUS_SAFETY_FI		RCSS_MCASPC_BUS_SAFETY_FI
230h	RCSS_MCASPC_BUS_SAFETY_ERR		RCSS_MCASPC_BUS_SAFETY_ERR
234h	RCSS_MCASPC_BUS_SAFETY_ERR_STAT_DATA0		RCSS_MCASPC_BUS_SAFETY_ERR_STAT_DATA0
238h	RCSS_MCASPC_BUS_SAFETY_ERR_STAT_CMD		RCSS_MCASPC_BUS_SAFETY_ERR_STAT_CMD
23Ch	RCSS_MCASPC_BUS_SAFETY_ERR_STAT_WRITE		RCSS_MCASPC_BUS_SAFETY_ERR_STAT_WRITE
240h	RCSS_MCASPC_BUS_SAFETY_ERR_STAT_READ		RCSS_MCASPC_BUS_SAFETY_ERR_STAT_READ
244h	RCSS_MCASPC_BUS_SAFETY_ERR_STAT_WRITERESP		RCSS_MCASPC_BUS_SAFETY_ERR_STAT_WRITERESP
248h	RCSS_SCIA_CTRL		RCSS_SCIA_CTRL
24Ch	RCSS_GIO_CFG		RCSS_GIO_CFG
250h	RCSS_TPTC_BOUNDARY_CFG		RCSS_TPTC_BOUNDARY_CFG
254h	RCSS_TPTC_XID_REORDER_CFG		RCSS_TPTC_XID_REORDER_CFG
258h	DBG_ACK_CPU_CTRL		DBG_ACK_CPU_CTRL
25Ch	DBG_ACK_CTL0		DBG_ACK_CTL0
FD0h	HW_SPARE_RW0		HW_SPARE_RW0
FD4h	HW_SPARE_RW1		HW_SPARE_RW1
FD8h	HW_SPARE_RW2		HW_SPARE_RW2
FDCh	HW_SPARE_RW3		HW_SPARE_RW3
FE0h	HW_SPARE_RO0		HW_SPARE_RO0
FE4h	HW_SPARE_RO1		HW_SPARE_RO1

Copyright © 2025 Texas Instruments Incorporated

Table 6-1381. RCSS_CTRL_MEMORY_MAP Registers (continued)

Offset	Acronym	Register Name	Section
FE8h	HW_SPARE_RO2		HW_SPARE_RO2
FECh	HW_SPARE_RO3		HW_SPARE_RO3
FF0h	HW_SPARE_WPH		HW_SPARE_WPH
FF4h	HW_SPARE_WPH		HW_SPARE_WPH
1008h	LOCK0_KICK0	- KICK0 component	LOCK0_KICK0
100Ch	LOCK0_KICK1	- KICK1 component	LOCK0_KICK1
1010h	intr_raw_status	Interrupt Raw Status/Set Register	intr_raw_status
1014h	intr_enabled_status_clear	Interrupt Enabled Status/Clear register	intr_enabled_status_clear
1018h	intr_enable	Interrupt Enable register	intr_enable
101Ch	intr_enable_clear	Interrupt Enable Clear register	intr_enable_clear
1020h	eoi	EOI register	EOI
1024h	fault_address	Fault Address register	fault_address
1028h	fault_type_status	Fault Type Status register	fault_type_status
102Ch	fault_attr_status	Fault Attribute Status register	fault_attr_status
1030h	fault_clear	Fault Clear register	fault_clear

6.2.8.1 PID Register (Offset = 0h) [reset = 61800213h]

PID is shown in Figure 6-1374 and described in Table 6-1382.

Return to the Summary Table.

PID register

Figure 6-1374. PID Register

31	30	29	28	27	26	25	24
PID_msb16							
R-6180h							
23	22	21	20	19	18	17	16
PID_msb16							
R-6180h							
15	14	13	12	11	10	9	8
PID_misc						PID_major	
R-0h						R-2h	
7	6	5	4	3	2	1	0
PID_custom		PID_minor					
R-0h		R-13h					

Table 6-1382. PID Register Field Descriptions

Bit	Field	Type	Reset	Description
31-16	PID_msb16	R	6180h	
15-11	PID_misc	R	0h	
10-8	PID_major	R	2h	
7-6	PID_custom	R	0h	
5-0	PID_minor	R	13h	

Copyright © 2025 Texas Instruments Incorporated

6.2.8.2 RCSS_TPCC_A_ERRAGG_MASK Register (Offset = 8h) [reset = X]

RCSS_TPCC_A_ERRAGG_MASK is shown in Figure 6-1375 and described in Table 6-1383.

Return to the Summary Table.

Figure 6-1375. RCSS_TPCC_A_ERRAGG_MASK Register

31	30	29	28	27	26	25	24
RESERVED					tptc_a1_read_access_error	tptc_a0_read_access_error	tpcc_a_read_access_error
R/W-X					R/W-0h	R/W-0h	R/W-0h
23	22	21	20	19	18	17	16
RESERVED					tptc_a1_write_access_error	tptc_a0_write_access_error	tpcc_a_write_access_error
R/W-X					R/W-0h	R/W-0h	R/W-0h
15	14	13	12	11	10	9	8
RESERVED							tpcc_a_parity_err
R/W-X							R/W-0h
7	6	5	4	3	2	1	0
RESERVED				tptc_a1_err	tptc_a0_err	tpcc_a_mpint	tpcc_a_errint
R/W-X				R/W-0h	R/W-0h	R/W-0h	R/W-0h

Table 6-1383. RCSS_TPCC_A_ERRAGG_MASK Register Field Descriptions

Bit	Field	Type	Reset	Description
31-27	RESERVED	R/W	X	
26	tptc_a1_read_access_error	R/W	0h	Mask Error from RCSS_TPTC_A1 to aggregated Error RCSS_TPCC_A_ERRAGG 1 : Error is Masked 0 : Error is Unmasked
25	tptc_a0_read_access_error	R/W	0h	Mask Error from RCSS_TPTC_A0 to aggregated Error RCSS_TPCC_A_ERRAGG 1 : Error is Masked 0 : Error is Unmasked
24	tpcc_a_read_access_error	R/W	0h	Mask Error from RCSS_TPCC_A to aggregated Error RCSS_TPCC_A_ERRAGG 1 : Error is Masked 0 : Error is Unmasked
23-19	RESERVED	R/W	X	
18	tptc_a1_write_access_error	R/W	0h	Mask Error from RCSS_TPTC_A1 to aggregated Error RCSS_TPCC_A_ERRAGG 1 : Error is Masked 0 : Error is Unmasked
17	tptc_a0_write_access_error	R/W	0h	Mask Error from RCSS_TPTC_A0 to aggregated Error RCSS_TPCC_A_ERRAGG 1 : Error is Masked 0 : Error is Unmasked
16	tpcc_a_write_access_error	R/W	0h	Mask Error from RCSS_TPCC_A to aggregated Error RCSS_TPCC_A_ERRAGG 1 : Error is Masked 0 : Error is Unmasked
15-9	RESERVED	R/W	X	
8	tpcc_a_parity_err	R/W	0h	Mask Error from RCSS_TPCC_A to aggregated Error RCSS_TPCC_A_ERRAGG 1 : Error is Masked 0 : Error is Unmasked
7-4	RESERVED	R/W	X	
3	tptc_a1_err	R/W	0h	Mask Error from RCSS_TPTC_A1 to aggregated Error RCSS_TPCC_A_ERRAGG 1 : Error is Masked 0 : Error is Unmasked

Copyright © 2025 Texas Instruments Incorporated

Table 6-1383. RCSS_TPCC_A_ERRAGG_MASK Register Field Descriptions (continued)

Bit	Field	Type	Reset	Description
2	tptc_a0_err	R/W	0h	Mask Error from RCSS_TPTC_A0 to aggregated Error RCSS_TPCC_A_ERRAGG 1 : Error is Masked 0 : Error is Unmasked
1	tpcc_a_mpint	R/W	0h	Mask Error from RCSS_TPCC_A to aggregated Error RCSS_TPCC_A_ERRAGG 1 : Error is Masked 0 : Error is Unmasked
0	tpcc_a_errint	R/W	0h	Mask Error from RCSS_TPCC_A to aggregated Error RCSS_TPCC_A_ERRAGG 1 : Error is Masked 0 : Error is Unmasked

6.2.8.3 RCSS_TPCC_A_ERRAGG_STATUS Register (Offset = Ch) [reset = X]

RCSS_TPCC_A_ERRAGG_STATUS is shown in Figure 6-1376 and described in Table 6-1384.

Return to the Summary Table.

Figure 6-1376. RCSS_TPCC_A_ERRAGG_STATUS Register

31	30	29	28	27	26	25	24
RESERVED					tptc_a1_read_access_error	tptc_a0_read_access_error	tpcc_a_read_access_error
R/W-X					R/W-0h	R/W-0h	R/W-0h
23	22	21	20	19	18	17	16
RESERVED					tptc_a1_write_access_error	tptc_a0_write_access_error	tpcc_a_write_access_error
R/W-X					R/W-0h	R/W-0h	R/W-0h
15	14	13	12	11	10	9	8
RESERVED							tpcc_a_parity_err
R/W-X							R/W-0h
7	6	5	4	3	2	1	0
RESERVED				tptc_a1_err	tptc_a0_err	tpcc_a_mpint	tpcc_a_errint
R/W-X				R/W-0h	R/W-0h	R/W-0h	R/W-0h

Table 6-1384. RCSS_TPCC_A_ERRAGG_STATUS Register Field Descriptions

Bit	Field	Type	Reset	Description
31-27	RESERVED	R/W	X	
26	tptc_a1_read_access_error	R/W	0h	Status of Error from RCSS_TPTC_A1. Set only if Interrupt is unmasked in RCSS_TPCC_A_ERRAGG_MASK Write 0x1 to clear this Error.
25	tptc_a0_read_access_error	R/W	0h	Status of Error from RCSS_TPTC_A0. Set only if Interrupt is unmasked in RCSS_TPCC_A_ERRAGG_MASK Write 0x1 to clear this Error.
24	tpcc_a_read_access_error	R/W	0h	Status of Error from RCSS_TPCC_A. Set only if Interrupt is unmasked in RCSS_TPCC_A_ERRAGG_MASK Write 0x1 to clear this Error.
23-19	RESERVED	R/W	X	
18	tptc_a1_write_access_error	R/W	0h	Status of Error from RCSS_TPTC_A1. Set only if Interrupt is unmasked in RCSS_TPCC_A_ERRAGG_MASK Write 0x1 to clear this Error.
17	tptc_a0_write_access_error	R/W	0h	Status of Error from RCSS_TPTC_A0. Set only if Interrupt is unmasked in RCSS_TPCC_A_ERRAGG_MASK Write 0x1 to clear this Error.

Copyright © 2025 Texas Instruments Incorporated

Table 6-1384. RCSS_TPCC_A_ERRAGG_STATUS Register Field Descriptions (continued)

Bit	Field	Type	Reset	Description
16	tpcc_a_write_access_error	R/W	0h	Status of Error from RCSS_TPCC_A. Set only if Interrupt is unmasked in RCSS_TPCC_A_ERRAGG_MASK Write 0x1 to clear this Error.
15-9	RESERVED	R/W	X	
8	tpcc_a_parity_err	R/W	0h	Status of Error from RCSS_TPCC_A. Set only if Interrupt is unmasked in RCSS_TPCC_A_ERRAGG_MASK Write 0x1 to clear this Error.
7-4	RESERVED	R/W	X	
3	tptc_a1_err	R/W	0h	Status of Error from RCSS_TPTC_A1. Set only if Interrupt is unmasked in RCSS_TPCC_A_ERRAGG_MASK Write 0x1 to clear this Error.
2	tptc_a0_err	R/W	0h	Status of Error from RCSS_TPTC_A0. Set only if Interrupt is unmasked in RCSS_TPCC_A_ERRAGG_MASK Write 0x1 to clear this Error.
1	tpcc_a_mpint	R/W	0h	Status of Error from RCSS_TPCC_A. Set only if Interrupt is unmasked in RCSS_TPCC_A_ERRAGG_MASK Write 0x1 to clear this Error.
0	tpcc_a_errint	R/W	0h	Status of Error from RCSS_TPCC_A. Set only if Interrupt is unmasked in RCSS_TPCC_A_ERRAGG_MASK Write 0x1 to clear this Error.

6.2.8.4 RCSS_TPCC_A_ERRAGG_STATUS_RAW Register (Offset = 10h) [reset = X]

RCSS_TPCC_A_ERRAGG_STATUS_RAW is shown in Figure 6-1377 and described in Table 6-1385.

Return to the Summary Table.

Figure 6-1377. RCSS_TPCC_A_ERRAGG_STATUS_RAW Register

31	30	29	28	27	26	25	24
RESERVED					tptc_a1_read_access_error	tptc_a0_read_access_error	tpcc_a_read_access_error
R/W-X					R/W-0h	R/W-0h	R/W-0h
23	22	21	20	19	18	17	16
RESERVED					tptc_a1_write_access_error	tptc_a0_write_access_error	tpcc_a_write_access_error
R/W-X					R/W-0h	R/W-0h	R/W-0h
15	14	13	12	11	10	9	8
RESERVED							tpcc_a_parity_err
R/W-X							R/W-0h
7	6	5	4	3	2	1	0
RESERVED				tptc_a1_err	tptc_a0_err	tpcc_a_mpint	tpcc_a_errint
R/W-X				R/W-0h	R/W-0h	R/W-0h	R/W-0h

Table 6-1385. RCSS_TPCC_A_ERRAGG_STATUS_RAW Register Field Descriptions

Bit	Field	Type	Reset	Description
31-27	RESERVED	R/W	X	
26	tptc_a1_read_access_error	R/W	0h	Raw Status of Error from RCSS_TPTC_A1. Set irrespective if the Interrupt is masked or unmasked in RCSS_TPCC_A_ERRAGG_MASK

Copyright © 2025 Texas Instruments Incorporated

Table 6-1385. RCSS_TPCC_A_ERRAGG_STATUS_RAW Register Field Descriptions (continued)

Bit	Field	Type	Reset	Description
25	tptc_a0_read_access_error	R/W	0h	Raw Status of Error from RCSS_TPTC_A0. Set irrespective if the Interrupt is masked or unmasked in RCSS_TPCC_A_ERRAGG_MASK
24	tpcc_a_read_access_error	R/W	0h	Raw Status of Error from RCSS_TPCC_A. Set irrespective if the Interrupt is masked or unmasked in RCSS_TPCC_A_ERRAGG_MASK
23-19	RESERVED	R/W	X	
18	tptc_a1_write_access_error	R/W	0h	Raw Status of Error from RCSS_TPTC_A1. Set irrespective if the Interrupt is masked or unmasked in RCSS_TPCC_A_ERRAGG_MASK
17	tptc_a0_write_access_error	R/W	0h	Raw Status of Error from RCSS_TPTC_A0. Set irrespective if the Interrupt is masked or unmasked in RCSS_TPCC_A_ERRAGG_MASK
16	tpcc_a_write_access_error	R/W	0h	Raw Status of Error from RCSS_TPCC_A. Set irrespective if the Interrupt is masked or unmasked in RCSS_TPCC_A_ERRAGG_MASK
15-9	RESERVED	R/W	X	
8	tpcc_a_parity_err	R/W	0h	Raw Status of Error from RCSS_TPCC_A. Set irrespective if the Interrupt is masked or unmasked in RCSS_TPCC_A_ERRAGG_MASK
7-4	RESERVED	R/W	X	
3	tptc_a1_err	R/W	0h	Raw Status of Error from RCSS_TPTC_A1. Set irrespective if the Interrupt is masked or unmasked in RCSS_TPCC_A_ERRAGG_MASK
2	tptc_a0_err	R/W	0h	Raw Status of Error from RCSS_TPTC_A0. Set irrespective if the Interrupt is masked or unmasked in RCSS_TPCC_A_ERRAGG_MASK
1	tpcc_a_mpint	R/W	0h	Raw Status of Error from RCSS_TPCC_A. Set irrespective if the Interrupt is masked or unmasked in RCSS_TPCC_A_ERRAGG_MASK
0	tpcc_a_errint	R/W	0h	Raw Status of Error from RCSS_TPCC_A. Set irrespective if the Interrupt is masked or unmasked in RCSS_TPCC_A_ERRAGG_MASK

6.2.8.5 RCSS_TPCC_A_INTAGG_MASK Register (Offset = 14h) [reset = X]

RCSS_TPCC_A_INTAGG_MASK is shown in Figure 6-1378 and described in Table 6-1386.

Return to the Summary Table.

Figure 6-1378. RCSS_TPCC_A_INTAGG_MASK Register

31	30	29	28	27	26	25	24
RESERVED							
R/W-X							
23	22	21	20	19	18	17	16
RESERVED						tptc_a1	tptc_a0
R/W-X						R/W-0h	R/W-0h
15	14	13	12	11	10	9	8
RESERVED							tpcc_a_int7
R/W-X							R/W-0h
7	6	5	4	3	2	1	0
tpcc_a_int6	tpcc_a_int5	tpcc_a_int4	tpcc_a_int3	tpcc_a_int2	tpcc_a_int1	tpcc_a_int0	tpcc_a_intg

Copyright © 2025 Texas Instruments Incorporated

Figure 6-1378. RCSS_TPCC_A_INTAGG_MASK Register (continued)

R/W-0h	R/W-0h	R/W-0h	R/W-0h	R/W-0h	R/W-0h	R/W-0h	R/W-0h

Table 6-1386. RCSS_TPCC_A_INTAGG_MASK Register Field Descriptions

Bit	Field	Type	Reset	Description
31-18	RESERVED	R/W	X	
17	tptc_a1	R/W	0h	Mask Interrupt from TPTC A1 to aggregated Interrupt RCSS_TPCC_A_INTAGG 1 : Interrupt is Masked 0 : Interrupt is Unmasked
16	tptc_a0	R/W	0h	Mask Interrupt from TPTC A0 to aggregated Interrupt RCSS_TPCC_A_INTAGG 1 : Interrupt is Masked 0 : Interrupt is Unmasked
15-9	RESERVED	R/W	X	
8	tpcc_a_int7	R/W	0h	Mask Interrupt from RCSS_TPCC_A to aggregated Interrupt RCSS_TPCC_A_INTAGG 1 : Interrupt is Masked 0 : Interrupt is Unmasked
7	tpcc_a_int6	R/W	0h	Mask Interrupt from RCSS_TPCC_A to aggregated Interrupt RCSS_TPCC_A_INTAGG 1 : Interrupt is Masked 0 : Interrupt is Unmasked
6	tpcc_a_int5	R/W	0h	Mask Interrupt from RCSS_TPCC_A to aggregated Interrupt RCSS_TPCC_A_INTAGG 1 : Interrupt is Masked 0 : Interrupt is Unmasked
5	tpcc_a_int4	R/W	0h	Mask Interrupt from RCSS_TPCC_A to aggregated Interrupt RCSS_TPCC_A_INTAGG 1 : Interrupt is Masked 0 : Interrupt is Unmasked
4	tpcc_a_int3	R/W	0h	Mask Interrupt from RCSS_TPCC_A to aggregated Interrupt RCSS_TPCC_A_INTAGG 1 : Interrupt is Masked 0 : Interrupt is Unmasked
3	tpcc_a_int2	R/W	0h	Mask Interrupt from RCSS_TPCC_A to aggregated Interrupt RCSS_TPCC_A_INTAGG 1 : Interrupt is Masked 0 : Interrupt is Unmasked
2	tpcc_a_int1	R/W	0h	Mask Interrupt from RCSS_TPCC_A to aggregated Interrupt RCSS_TPCC_A_INTAGG 1 : Interrupt is Masked 0 : Interrupt is Unmasked
1	tpcc_a_int0	R/W	0h	Mask Interrupt from RCSS_TPCC_A to aggregated Interrupt RCSS_TPCC_A_INTAGG 1 : Interrupt is Masked 0 : Interrupt is Unmasked
0	tpcc_a_intg	R/W	0h	Mask Interrupt from RCSS_TPCC_A to aggregated Interrupt RCSS_TPCC_A_INTAGG 1 : Interrupt is Masked 0 : Interrupt is Unmasked

6.2.8.6 RCSS_TPCC_A_INTAGG_STATUS Register (Offset = 18h) [reset = X]

RCSS_TPCC_A_INTAGG_STATUS is shown in Figure 6-1379 and described in Table 6-1387.

Return to the Summary Table.

Figure 6-1379. RCSS_TPCC_A_INTAGG_STATUS Register

31	30	29	28	27	26	25	24
RESERVED							
R/W-X							
23	22	21	20	19	18	17	16
RESERVED						tptc_a1	tptc_a0
R/W-X						R/W-0h	R/W-0h
15	14	13	12	11	10	9	8

Copyright © 2025 Texas Instruments Incorporated

Figure 6-1379. RCSS_TPCC_A_INTAGG_STATUS Register (continued)

RESERVED							tpcc_a_int7
R/W-X							R/W-0h
7	6	5	4	3	2	1	0
tpcc_a_int6	tpcc_a_int5	tpcc_a_int4	tpcc_a_int3	tpcc_a_int2	tpcc_a_int1	tpcc_a_int0	tpcc_a_intg
R/W-0h	R/W-0h	R/W-0h	R/W-0h	R/W-0h	R/W-0h	R/W-0h	R/W-0h

Table 6-1387. RCSS_TPCC_A_INTAGG_STATUS Register Field Descriptions

Bit	Field	Type	Reset	Description
31-18	RESERVED	R/W	X	
17	tptc_a1	R/W	0h	Status of Interrupt from TPTC A1. Set only if Interrupt is unmasked in RCSS_TPCC_A_INTAGG_MASK Write 0x1 to clear this interrupt.
16	tptc_a0	R/W	0h	Status of Interrupt from TPTC A0. Set only if Interrupt is unmasked in RCSS_TPCC_A_INTAGG_MASK Write 0x1 to clear this interrupt.
15-9	RESERVED	R/W	X	
8	tpcc_a_int7	R/W	0h	Status of Interrupt from RCSS_TPCC_A. Set only if Interrupt is unmasked in RCSS_TPCC_A_INTAGG_MASK Write 0x1 to clear this interrupt.
7	tpcc_a_int6	R/W	0h	Status of Interrupt from RCSS_TPCC_A. Set only if Interrupt is unmasked in RCSS_TPCC_A_INTAGG_MASK Write 0x1 to clear this interrupt.
6	tpcc_a_int5	R/W	0h	Status of Interrupt from RCSS_TPCC_A. Set only if Interrupt is unmasked in RCSS_TPCC_A_INTAGG_MASK Write 0x1 to clear this interrupt.
5	tpcc_a_int4	R/W	0h	Status of Interrupt from RCSS_TPCC_A. Set only if Interrupt is unmasked in RCSS_TPCC_A_INTAGG_MASK Write 0x1 to clear this interrupt.
4	tpcc_a_int3	R/W	0h	Status of Interrupt from RCSS_TPCC_A. Set only if Interrupt is unmasked in RCSS_TPCC_A_INTAGG_MASK Write 0x1 to clear this interrupt.
3	tpcc_a_int2	R/W	0h	Status of Interrupt from RCSS_TPCC_A. Set only if Interrupt is unmasked in RCSS_TPCC_A_INTAGG_MASK Write 0x1 to clear this interrupt.
2	tpcc_a_int1	R/W	0h	Status of Interrupt from RCSS_TPCC_A. Set only if Interrupt is unmasked in RCSS_TPCC_A_INTAGG_MASK Write 0x1 to clear this interrupt.
1	tpcc_a_int0	R/W	0h	Status of Interrupt from RCSS_TPCC_A. Set only if Interrupt is unmasked in RCSS_TPCC_A_INTAGG_MASK Write 0x1 to clear this interrupt.
0	tpcc_a_intg	R/W	0h	Status of Interrupt from RCSS_TPCC_A. Set only if Interrupt is unmasked in RCSS_TPCC_A_INTAGG_MASK Wrie 0x1 to clear this interrupt.

6.2.8.7 RCSS_TPCC_A_INTAGG_STATUS_RAW Register (Offset = 1Ch) [reset = X]

RCSS_TPCC_A_INTAGG_STATUS_RAW is shown in Figure 6-1380 and described in Table 6-1388.

Return to the Summary Table.

Figure 6-1380. RCSS_TPCC_A_INTAGG_STATUS_RAW Register

31	30	29	28	27	26	25	24
RESERVED							
R/W-X							
23	22	21	20	19	18	17	16

Copyright © 2025 Texas Instruments Incorporated

Figure 6-1380. RCSS_TPCC_A_INTAGG_STATUS_RAW Register (continued)

RESERVED						tptc_a1	tptc_a0
R/W-X						R/W-0h	R/W-0h
15	14	13	12	11	10	9	8
RESERVED							tpcc_a_int7
R/W-X							R/W-0h
7	6	5	4	3	2	1	0
tpcc_a_int6	tpcc_a_int5	tpcc_a_int4	tpcc_a_int3	tpcc_a_int2	tpcc_a_int1	tpcc_a_int0	tpcc_a_intg
R/W-0h	R/W-0h	R/W-0h	R/W-0h	R/W-0h	R/W-0h	R/W-0h	R/W-0h

Table 6-1388. RCSS_TPCC_A_INTAGG_STATUS_RAW Register Field Descriptions

Bit	Field	Type	Reset	Description
31-18	RESERVED	R/W	X	
17	tptc_a1	R/W	0h	Raw Status of Interrupt from TPTC A1. Set irrespective if the Interrupt is masked or unmasked in RCSS_TPCC_A_INTAGG_MASK
16	tptc_a0	R/W	0h	Raw Status of Interrupt from TPTC A0. Set irrespective if the Interrupt is masked or unmasked in RCSS_TPCC_A_INTAGG_MASK
15-9	RESERVED	R/W	X	
8	tpcc_a_int7	R/W	0h	Raw Status of Interrupt from RCSS_TPCC_A. Set irrespective if the Interrupt is masked or unmasked in RCSS_TPCC_A_INTAGG_MASK
7	tpcc_a_int6	R/W	0h	Raw Status of Interrupt from RCSS_TPCC_A. Set irrespective if the Interrupt is masked or unmasked in RCSS_TPCC_A_INTAGG_MASK
6	tpcc_a_int5	R/W	0h	Raw Status of Interrupt from RCSS_TPCC_A. Set irrespective if the Interrupt is masked or unmasked in RCSS_TPCC_A_INTAGG_MASK
5	tpcc_a_int4	R/W	0h	Raw Status of Interrupt from RCSS_TPCC_A. Set irrespective if the Interrupt is masked or unmasked in RCSS_TPCC_A_INTAGG_MASK
4	tpcc_a_int3	R/W	0h	Raw Status of Interrupt from RCSS_TPCC_A. Set irrespective if the Interrupt is masked or unmasked in RCSS_TPCC_A_INTAGG_MASK
3	tpcc_a_int2	R/W	0h	Raw Status of Interrupt from RCSS_TPCC_A. Set irrespective if the Interrupt is masked or unmasked in RCSS_TPCC_A_INTAGG_MASK
2	tpcc_a_int1	R/W	0h	Raw Status of Interrupt from RCSS_TPCC_A. Set irrespective if the Interrupt is masked or unmasked in RCSS_TPCC_A_INTAGG_MASK
1	tpcc_a_int0	R/W	0h	Raw Status of Interrupt from RCSS_TPCC_A. Set irrespective if the Interrupt is masked or unmasked in RCSS_TPCC_A_INTAGG_MASK
0	tpcc_a_intg	R/W	0h	Raw Status of Interrupt from RCSS_TPCC_A. Set irrespective if the Interrupt is masked or unmasked in RCSS_TPCC_A_INTAGG_MASK

6.2.8.8 RCSS_SPI_TRIG_SRC Register (Offset = 20h) [reset = X]

RCSS_SPI_TRIG_SRC is shown in Figure 6-1381 and described in Table 6-1389.

Return to the Summary Table.

Copyright © 2025 Texas Instruments Incorporated

Figure 6-1381. RCSS_SPI_TRIG_SRC Register

31	30	29	28	27	26	25	24	23	22	21	20	19	18	17	16
RESERVED				trig_spib											
R/W-X				R/W-0h											
15	14	13	12	11	10	9	8	7	6	5	4	3	2	1	0
RESERVED				trig_spia											
R/W-X				R/W-0h											

Table 6-1389. RCSS_SPI_TRIG_SRC Register Field Descriptions

Bit	Field	Type	Reset	Description
31-28	RESERVED	R/W	X	
27-16	trig_spib	R/W	0h	Trigger sources for RCSS SPIB
15-12	RESERVED	R/W	X	
11-0	trig_spia	R/W	0h	Trigger sources for RCSS SPIA

6.2.8.9 RCSS_SPIA_MEMINIT Register (Offset = 24h) [reset = X]

RCSS_SPIA_MEMINIT is shown in Figure 6-1382 and described in Table 6-1390.

Return to the Summary Table.

Figure 6-1382. RCSS_SPIA_MEMINIT Register

31	30	29	28	27	26	25	24
RESERVED							
R/W-X							
23	22	21	20	19	18	17	16
RESERVED							
R/W-X							
15	14	13	12	11	10	9	8
RESERVED							
R/W-X							
7	6	5	4	3	2	1	0
RESERVED							mem0_init
R/W-X							R/W-0h

Table 6-1390. RCSS_SPIA_MEMINIT Register Field Descriptions

Bit	Field	Type	Reset	Description
31-1	RESERVED	R/W	X	
0	mem0_init	R/W	0h	Write pulse bit field: Start Memory initialization of memory. Write 0x1 to start memory initialization. Write 0x0 after ensuring Memory initialization is in progress or has completed.

6.2.8.10 RCSS_SPIA_MEMINIT_DONE Register (Offset = 28h) [reset = X]

RCSS_SPIA_MEMINIT_DONE is shown in Figure 6-1383 and described in Table 6-1391.

Return to the Summary Table.

Figure 6-1383. RCSS_SPIA_MEMINIT_DONE Register

31	30	29	28	27	26	25	24

Copyright © 2025 Texas Instruments Incorporated

Figure 6-1383. RCSS_SPIA_MEMINIT_DONE Register (continued)

RESERVED							
R/W-X							
23	22	21	20	19	18	17	16
RESERVED							
R/W-X							
15	14	13	12	11	10	9	8
RESERVED							
R/W-X							
7	6	5	4	3	2	1	0
RESERVED							mem0_done
R/W-X							R/W-0h

Table 6-1391. RCSS_SPIA_MEMINIT_DONE Register Field Descriptions

Bit	Field	Type	Reset	Description
31-1	RESERVED	R/W	X	
0	mem0_done	R/W	0h	Status field. Read value 0x1 indicates previously triggered Memory initialization of memory is complete. Write 0x1 to clear status.

6.2.8.11 RCSS_SPIA_MEMINIT_STATUS Register (Offset = 2Ch) [reset = X]

RCSS_SPIA_MEMINIT_STATUS is shown in Figure 6-1384 and described in Table 6-1392.

Return to the Summary Table.

Figure 6-1384. RCSS_SPIA_MEMINIT_STATUS Register

31	30	29	28	27	26	25	24
RESERVED							
R-X							
23	22	21	20	19	18	17	16
RESERVED							
R-X							
15	14	13	12	11	10	9	8
RESERVED							
R-X							
7	6	5	4	3	2	1	0
RESERVED							mem0_status
R-X							R-0h

Table 6-1392. RCSS_SPIA_MEMINIT_STATUS Register Field Descriptions

Bit	Field	Type	Reset	Description
31-1	RESERVED	R	X	
0	mem0_status	R	0h	Status field. Read value 0x1 indicates previously triggered Memory initialization of memory is in progress.

6.2.8.12 RCSS_SPIB_MEMINIT Register (Offset = 30h) [reset = X]

RCSS_SPIB_MEMINIT is shown in Figure 6-1385 and described in Table 6-1393.

Copyright © 2025 Texas Instruments Incorporated

Return to the Summary Table.

Figure 6-1385. RCSS_SPIB_MEMINIT Register

31	30	29	28	27	26	25	24
RESERVED							
R/W-X							
23	22	21	20	19	18	17	16
RESERVED							
R/W-X							
15	14	13	12	11	10	9	8
RESERVED							
R/W-X							
7	6	5	4	3	2	1	0
RESERVED							mem0_init
R/W-X							R/W-0h

Table 6-1393. RCSS_SPIB_MEMINIT Register Field Descriptions

Bit	Field	Type	Reset	Description
31-1	RESERVED	R/W	X	
0	mem0_init	R/W	0h	Write pulse bit field: Start Memory initialization of memory. Write 0x1 to start memory initialization. Write 0x0 after ensuring Memory initialization is in progress or has completed.

6.2.8.13 RCSS_SPIB_MEMINIT_DONE Register (Offset = 34h) [reset = X]

RCSS_SPIB_MEMINIT_DONE is shown in Figure 6-1386 and described in Table 6-1394.

Return to the Summary Table.

Figure 6-1386. RCSS_SPIB_MEMINIT_DONE Register

31	30	29	28	27	26	25	24
RESERVED							
R/W-X							
23	22	21	20	19	18	17	16
RESERVED							
R/W-X							
15	14	13	12	11	10	9	8
RESERVED							
R/W-X							
7	6	5	4	3	2	1	0
RESERVED							mem0_done
R/W-X							R/W-0h

Table 6-1394. RCSS_SPIB_MEMINIT_DONE Register Field Descriptions

Bit	Field	Type	Reset	Description
31-1	RESERVED	R/W	X	
0	mem0_done	R/W	0h	Status field. Read value 0x1 indicates previously triggered Memory initialization of memory is complete. Write 0x1 to clear status.

Copyright © 2025 Texas Instruments Incorporated

6.2.8.14 RCSS_SPIB_MEMINIT_STATUS Register (Offset = 38h) [reset = X]

RCSS_SPIB_MEMINIT_STATUS is shown in Figure 6-1387 and described in Table 6-1395.

Return to the Summary Table.

Figure 6-1387. RCSS_SPIB_MEMINIT_STATUS Register

31	30	29	28	27	26	25	24
RESERVED							
R-X							
23	22	21	20	19	18	17	16
RESERVED							
R-X							
15	14	13	12	11	10	9	8
RESERVED							
R-X							
7	6	5	4	3	2	1	0
RESERVED							mem0_status
R-X							R-0h

Table 6-1395. RCSS_SPIB_MEMINIT_STATUS Register Field Descriptions

Bit	Field	Type	Reset	Description
31-1	RESERVED	R	X	
0	mem0_status	R	0h	Status field. Read value 0x1 indicates previously triggered Memory initialization of memory is in progress.

6.2.8.15 RCSS_TPCC_MEMINIT_START Register (Offset = 3Ch) [reset = X]

RCSS_TPCC_MEMINIT_START is shown in Figure 6-1388 and described in Table 6-1396.

Return to the Summary Table.

Figure 6-1388. RCSS_TPCC_MEMINIT_START Register

31	30	29	28	27	26	25	24
RESERVED							
R/W-X							
23	22	21	20	19	18	17	16
RESERVED							
R/W-X							
15	14	13	12	11	10	9	8
RESERVED							
R/W-X							
7	6	5	4	3	2	1	0
RESERVED							tpcc_a_meminit_start
R/W-X							R/W-0h

Table 6-1396. RCSS_TPCC_MEMINIT_START Register Field Descriptions

Bit	Field	Type	Reset	Description
31-1	RESERVED	R/W	X	

Copyright © 2025 Texas Instruments Incorporated

Table 6-1396. RCSS_TPCC_MEMINIT_START Register Field Descriptions (continued)

Bit	Field	Type	Reset	Description
0	tpcc_a_meminit_start	R/W	0h	Write pulse bit field: Start Memory initialization of memory. Write 0x1 to start memory initialization. Write 0x0 after ensuring Memory initialization is in progress or has completed.

6.2.8.16 RCSS_TPCC_MEMINIT_DONE Register (Offset = 40h) [reset = X]

RCSS_TPCC_MEMINIT_DONE is shown in Figure 6-1389 and described in Table 6-1397.

Return to the Summary Table.

Figure 6-1389. RCSS_TPCC_MEMINIT_DONE Register

31	30	29	28	27	26	25	24
RESERVED							
R/W-X							
23	22	21	20	19	18	17	16
RESERVED							
R/W-X							
15	14	13	12	11	10	9	8
RESERVED							
R/W-X							
7	6	5	4	3	2	1	0
RESERVED							tpcc_a_meminit_done
R/W-X							R/W-0h

Table 6-1397. RCSS_TPCC_MEMINIT_DONE Register Field Descriptions

Bit	Field	Type	Reset	Description
31-1	RESERVED	R/W	X	
0	tpcc_a_meminit_done	R/W	0h	Status field. Read value 0x1 indicates previously triggered Memory initialization of memory is complete. Write 0x1 to clear status.

6.2.8.17 RCSS_TPCC_MEMINIT_STATUS Register (Offset = 44h) [reset = X]

RCSS_TPCC_MEMINIT_STATUS is shown in Figure 6-1390 and described in Table 6-1398.

Return to the Summary Table.

Figure 6-1390. RCSS_TPCC_MEMINIT_STATUS Register

31	30	29	28	27	26	25	24
RESERVED							
R-X							
23	22	21	20	19	18	17	16
RESERVED							
R-X							
15	14	13	12	11	10	9	8
RESERVED							
R-X							
7	6	5	4	3	2	1	0

Copyright © 2025 Texas Instruments Incorporated

Figure 6-1390. RCSS_TPCC_MEMINIT_STATUS Register (continued)

RESERVED	tpcc_a_meminit_status
R-X	R-0h

Table 6-1398. RCSS_TPCC_MEMINIT_STATUS Register Field Descriptions

Bit	Field	Type	Reset	Description
31-1	RESERVED	R	X	
0	tpcc_a_meminit_status	R	0h	Status field. Read value 0x1 indicates previously triggered Memory initialization of memory is in progress.

6.2.8.18 RCSS_SPIA_CFG Register (Offset = 48h) [reset = X]

RCSS_SPIA_CFG is shown in Figure 6-1391 and described in Table 6-1399.

Return to the Summary Table.

Figure 6-1391. RCSS_SPIA_CFG Register

31	30	29	28	27	26	25	24
RESERVED							spia_int_trig_polarity
R/W-X							R/W-0h
23	22	21	20	19	18	17	16
RESERVED							spia_trig_gate_en
R/W-X							R/W-0h
15	14	13	12	11	10	9	8
RESERVED							spia_cs_trigsrc_en
R/W-X							R/W-0h
7	6	5	4	3	2	1	0
RESERVED						spiasync2sen	
R/W-X						R/W-0h	

Table 6-1399. RCSS_SPIA_CFG Register Field Descriptions

Bit	Field	Type	Reset	Description
31-25	RESERVED	R/W	X	
24	spia_int_trig_polarity	R/W	0h	Trigger source polarity select. Write 0x0 : Polarity 0, Write 0x1 : Polarity 1
23-17	RESERVED	R/W	X	
16	spia_trig_gate_en	R/W	0h	Trigger Gate Enable. Write 0x1 : The triggers are un-gated only when chip-select is active
15-9	RESERVED	R/W	X	
8	spia_cs_trigsrc_en	R/W	0h	Chip Select Trigger SRC enable, Write 0x1 to Use CS as trigger source
7-3	RESERVED	R/W	X	
2-0	spiasync2sen	R/W	0h	Do not touch the field. Used as Tie-off for IP-config

Copyright © 2025 Texas Instruments Incorporated

6.2.8.19 RCSS_SPIB_CFG Register (Offset = 4Ch) [reset = X]

RCSS_SPIB_CFG is shown in Figure 6-1392 and described in Table 6-1400.

Return to the Summary Table.

Figure 6-1392. RCSS_SPIB_CFG Register

31	30	29	28	27	26	25	24
RESERVED							spib_int_trig_polarity
R/W-X							R/W-0h
23	22	21	20	19	18	17	16
RESERVED							spib_trig_gate_en
R/W-X							R/W-0h
15	14	13	12	11	10	9	8
RESERVED							spib_cs_trigsrc_en
R/W-X							R/W-0h
7	6	5	4	3	2	1	0
RESERVED					spibsync2sen		
R/W-X					R/W-0h		

Table 6-1400. RCSS_SPIB_CFG Register Field Descriptions

Bit	Field	Type	Reset	Description
31-25	RESERVED	R/W	X	
24	spib_int_trig_polarity	R/W	0h	Trigger source polarity select. Write 0x0 : Polarity 0, Write 0x1 : Polarity 1
23-17	RESERVED	R/W	X	
16	spib_trig_gate_en	R/W	0h	Trigger Gate Enable. Write 0x1 : The triggers are un-gated only when chip-select is active
15-9	RESERVED	R/W	X	
8	spib_cs_trigsrc_en	R/W	0h	Chip Select Trigger SRC enable, Write 0x1 to Use CS as trigger source
7-3	RESERVED	R/W	X	
2-0	spibsync2sen	R/W	0h	Do not touch the field. Used as Tie-off for IP-config

6.2.8.20 RCSS_SPIA_IOCFG Register (Offset = 50h) [reset = X]

RCSS_SPIA_IOCFG is shown in Figure 6-1393 and described in Table 6-1401.

Return to the Summary Table.

Figure 6-1393. RCSS_SPIA_IOCFG Register

31	30	29	28	27	26	25	24
RESERVED							
R/W-X							
23	22	21	20	19	18	17	16
RESERVED						miso_oen_by_cs	
R/W-X						R/W-0h	
15	14	13	12	11	10	9	8

Copyright © 2025 Texas Instruments Incorporated

Figure 6-1393. RCSS_SPIA_IOCFG Register (continued)

RESERVED							cs_pol
R/W-X							R/W-0h
7	6	5	4	3	2	1	0
RESERVED							cs_deact
R/W-X							R/W-0h

Table 6-1401. RCSS_SPIA_IOCFG Register Field Descriptions

Bit	Field	Type	Reset	Description
31-19	RESERVED	R/W	X	
18-16	miso_oen_by_cs	R/W	0h	SPI MISO Output Enable Control based on Chip select CS. Applicable in secondary mode. Write 0x1 : MISO OEN controlled based on CS. When CS is inactive OE_N=1. Write 0x0 : MISO OEN controlled by IP
15-11	RESERVED	R/W	X	
10-8	cs_pol	R/W	0h	SPI CS polarity-secondary mode. Write 0x1 : Active high. Write 0x0 : Active low
7-3	RESERVED	R/W	X	
2-0	cs_deact	R/W	0h	Chip Select Deactivate. Write 0x1 : SPI External chip select is overridden with the value of SPI CS polarity-secondary mode

6.2.8.21 RCSS_SPIB_IOCFG Register (Offset = 54h) [reset = X]

RCSS_SPIB_IOCFG is shown in Figure 6-1394 and described in Table 6-1402.

Return to the Summary Table.

Figure 6-1394. RCSS_SPIB_IOCFG Register

31	30	29	28	27	26	25	24
RESERVED							
R/W-X							
23	22	21	20	19	18	17	16
RESERVED							miso_oen_by_cs
R/W-X							R/W-0h
15	14	13	12	11	10	9	8
RESERVED							cs_pol
R/W-X							R/W-0h
7	6	5	4	3	2	1	0
RESERVED							cs_deact
R/W-X							R/W-0h

Table 6-1402. RCSS_SPIB_IOCFG Register Field Descriptions

Bit	Field	Type	Reset	Description
31-19	RESERVED	R/W	X	
18-16	miso_oen_by_cs	R/W	0h	SPI POCI Output Enable Control based on Chip select CS. Applicable in secondary mode. Write 0x1 : MISO OEN controlled based on CS. When CS is inactive OE_N=1. Write 0x0 : MISO OEN controlled by IP
15-11	RESERVED	R/W	X	
10-8	cs_pol	R/W	0h	SPI CS polarity-secondary mode. Write 0x1 : Active high. Write 0x0 : Active low

Copyright © 2025 Texas Instruments Incorporated

Table 6-1402. RCSS_SPIB_IOCFG Register Field Descriptions (continued)

Bit	Field	Type	Reset	Description
7-3	RESERVED	R/W	X	
2-0	cs_deact	R/W	0h	Chip Select Deactivate. Write 0x1 : SPI External chip select is overridden with the value of SPI CS polarity-secondary mode

6.2.8.22 RCSS_SPI_HOST_IRQ Register (Offset = 58h) [reset = X]

RCSS_SPI_HOST_IRQ is shown in Figure 6-1395 and described in Table 6-1403.

Return to the Summary Table.

Figure 6-1395. RCSS_SPI_HOST_IRQ Register

31	30	29	28	27	26	25	24	23	22	21	20	19	18	17	16
RESERVED															
R/W-X															
15	14	13	12	11	10	9	8	7	6	5	4	3	2	1	0
RESERVED														host_irq	
R/W-X														R/W-0h	

Table 6-1403. RCSS_SPI_HOST_IRQ Register Field Descriptions

Bit	Field	Type	Reset	Description
31-3	RESERVED	R/W	X	
2-0	host_irq	R/W	0h	TI internal reserved for R&D

6.2.8.23 TPTC_DBS_CFG Register (Offset = 5Ch) [reset = X]

TPTC_DBS_CFG is shown in Figure 6-1396 and described in Table 6-1404.

Return to the Summary Table.

Figure 6-1396. TPTC_DBS_CFG Register

31	30	29	28	27	26	25	24
RESERVED							
R/W-X							
23	22	21	20	19	18	17	16
RESERVED							
R/W-X							
15	14	13	12	11	10	9	8
RESERVED							
R/W-X							
7	6	5	4	3	2	1	0
RESERVED				tptc_a1		tptc_a0	
R/W-X				R/W-0h		R/W-0h	

Table 6-1404. TPTC_DBS_CFG Register Field Descriptions

Bit	Field	Type	Reset	Description
31-4	RESERVED	R/W	X	
3-2	tptc_a1	R/W	0h	Max Burst size tieoff value for TPTC A1

Copyright © 2025 Texas Instruments Incorporated

Table 6-1404. TPTC_DBS_CFG Register Field Descriptions (continued)

Bit	Field	Type	Reset	Description
1-0	tptc_a0	R/W	0h	Max Burst size tieoff value for TPTC A0

6.2.8.24 RCSS_TPCC_A_PARITY_CTRL Register (Offset = 60h) [reset = X]

RCSS_TPCC_A_PARITY_CTRL is shown in Figure 6-1397 and described in Table 6-1405.

Return to the Summary Table.

Figure 6-1397. RCSS_TPCC_A_PARITY_CTRL Register

31	30	29	28	27	26	25	24
RESERVED							
R/W-X							
23	22	21	20	19	18	17	16
RESERVED							
R/W-X							
15	14	13	12	11	10	9	8
RESERVED							
R/W-X							
7	6	5	4	3	2	1	0
RESERVED					parity_err_clr	parity_testen	parity_en
R/W-X					R/W-0h	R/W-0h	R/W-0h

Table 6-1405. RCSS_TPCC_A_PARITY_CTRL Register Field Descriptions

Bit	Field	Type	Reset	Description
31-3	RESERVED	R/W	X	
2	parity_err_clr	R/W	0h	Write pulse bit field: Write 0x1 to clear the Parity Error status for TPCC
1	parity_testen	R/W	0h	Enable Parity Test for TPCC. Write 0x1 : Parity Test is enabled on PARAM memory
0	parity_en	R/W	0h	Enable Parity for TPCC. Write 0x1 : Parity is enabled on PARAM memory

6.2.8.25 RCSS_TPCC_A_PARITY_STATUS Register (Offset = 64h) [reset = X]

RCSS_TPCC_A_PARITY_STATUS is shown in Figure 6-1398 and described in Table 6-1406.

Return to the Summary Table.

Figure 6-1398. RCSS_TPCC_A_PARITY_STATUS Register

31	30	29	28	27	26	25	24	23	22	21	20	19	18	17	16
RESERVED															
R-X															
15	14	13	12	11	10	9	8	7	6	5	4	3	2	1	0
parity_addr								RESERVED							
R-0h								R-X							

Copyright © 2025 Texas Instruments Incorporated

Table 6-1406. RCSS_TPCC_A_PARITY_STATUS Register Field Descriptions

Bit	Field	Type	Reset	Description
31-16	RESERVED	R	X	
15-8	parity_addr	R	0h	TPCC Error Address at which Parity Error occurred
7-0	RESERVED	R	X	

6.2.8.26 RCSS_CSI2A_CFG Register (Offset = 68h) [reset = X]

RCSS_CSI2A_CFG is shown in Figure 6-1399 and described in Table 6-1407.

Return to the Summary Table.

Figure 6-1399. RCSS_CSI2A_CFG Register

31	30	29	28	27	26	25	24
RESERVED	sof_intr1_sel			RESERVED	sof_intr0_sel		
R/W-X	R/W-0h			R/W-X	R/W-0h		
23	22	21	20	19	18	17	16
RESERVED	eof_intr1_sel			eof_intr0_sel			sign_ext_en
R/W-X	R/W-0h			R/W-0h			R/W-0h
15	14	13	12	11	10	9	8
RESERVED							mwait
R/W-X							R/W-0h
7	6	5	4	3	2	1	0
RESERVED			lane_enable				
R/W-X			R/W-0h				

Table 6-1407. RCSS_CSI2A_CFG Register Field Descriptions

Bit	Field	Type	Reset	Description
31	RESERVED	R/W	X	
30-28	sof_intr1_sel	R/W	0h	Select the Start of Frame Contx to be sent as RCSS_CSI2A_SOF_INT1 Write 0 : Start of Frame for Context 0 will be propagated on this interrupt line Write 7 : Start of Frame for Context 7 will be propagated on this interrupt line
27	RESERVED	R/W	X	
26-24	sof_intr0_sel	R/W	0h	Select the Start of Frame Contx to be sent as RCSS_CSI2A_SOF_INT0 Write 0 : Start of Frame for Context 0 will be propagated on this interrupt line Write 7 : Start of Frame for Context 7 will be propagated on this interrupt line
23	RESERVED	R/W	X	
22-20	eof_intr1_sel	R/W	0h	Select the End of Frame Contx to be sent as RCSS_CSI2A_EOF_INT1 Write 0 : End of Frame for Context 0 will be propagated on this interrupt line Write 7 : End of Frame for Context 7 will be propagated on this interrupt line
19-17	eof_intr0_sel	R/W	0h	Select the End of Frame Contx to be sent as RCSS_CSI2A_EOF_INT0 Write 0 : End of Frame for Context 0 will be propagated on this interrupt line Write 7 : End of Frame for Context 7 will be propagated on this interrupt line
16	sign_ext_en	R/W	0h	Sign Extension Enable for CSI2 A
15-9	RESERVED	R/W	X	
8	mwait	R/W	0h	Power Idle Protocol related Mwait Port
7-5	RESERVED	R/W	X	

Copyright © 2025 Texas Instruments Incorporated

Table 6-1407. RCSS_CSI2A_CFG Register Field Descriptions (continued)

Bit	Field	Type	Reset	Description
4-0	lane_enable	R/W	0h	Lane enable for CSI2 A

6.2.8.27 RCSS_CSI2B_CFG Register (Offset = 6Ch) [reset = X]

RCSS_CSI2B_CFG is shown in Figure 6-1400 and described in Table 6-1408.

Return to the Summary Table.

Figure 6-1400. RCSS_CSI2B_CFG Register

31	30	29	28	27	26	25	24
RESERVED	sof_intr1_sel			RESERVED	sof_intr0_sel		
R/W-X	R/W-0h			R/W-X	R/W-0h		
23	22	21	20	19	18	17	16
RESERVED	eof_intr1_sel			eof_intr0_sel			sign_ext_en
R/W-X	R/W-0h			R/W-0h			R/W-0h
15	14	13	12	11	10	9	8
RESERVED							mwait
R/W-X							R/W-0h
7	6	5	4	3	2	1	0
RESERVED				lane_enable			
R/W-X				R/W-0h			

Table 6-1408. RCSS_CSI2B_CFG Register Field Descriptions

Bit	Field	Type	Reset	Description
31	RESERVED	R/W	X	
30-28	sof_intr1_sel	R/W	0h	Select the Start of Frame Contx to be sent as RCSS_CSI2B_SOF_INT1 Write 0 : Start of Frame for Context 0 will be propagated on this interrupt line Write 7 : Start of Frame for Context 7 will be propagated on this interrupt line
27	RESERVED	R/W	X	
26-24	sof_intr0_sel	R/W	0h	Select the Start of Frame Contx to be sent as RCSS_CSI2B_SOF_INT0 Write 0 : Start of Frame for Context 0 will be propagated on this interrupt line Write 7 : Start of Frame for Context 7 will be propagated on this interrupt line
23	RESERVED	R/W	X	
22-20	eof_intr1_sel	R/W	0h	Select the End of Frame Contx to be sent as RCSS_CSI2B_EOF_INT1 Write 0 : End of Frame for Context 0 will be propagated on this interrupt line Write 7 : End of Frame for Context 7 will be propagated on this interrupt line
19-17	eof_intr0_sel	R/W	0h	Select the End of Frame Contx to be sent as RCSS_CSI2B_EOF_INT0 Write 0 : End of Frame for Context 0 will be propagated on this interrupt line Write 7 : End of Frame for Context 7 will be propagated on this interrupt line
16	sign_ext_en	R/W	0h	Sign Extension Enable for CSI2 B
15-9	RESERVED	R/W	X	
8	mwait	R/W	0h	Power Idle Protocol related Mwait Port
7-5	RESERVED	R/W	X	
4-0	lane_enable	R/W	0h	Lane enable for CSI2 B

Copyright © 2025 Texas Instruments Incorporated

6.2.8.28 RCSS_CSI2A_CTX0_LINE_PING_PONG Register (Offset = 70h) [reset = X]

RCSS_CSI2A_CTX0_LINE_PING_PONG is shown in Figure 6-1401 and described in Table 6-1409.

Return to the Summary Table.

Figure 6-1401. RCSS_CSI2A_CTX0_LINE_PING_PONG Register

31	30	29	28	27	26	25	24
RESERVED							
R/W-X							
23	22	21	20	19	18	17	16
RESERVED							enable
R/W-X							R/W-0h
15	14	13	12	11	10	9	8
num_lines							
R/W-0h							
7	6	5	4	3	2	1	0
num_lines							
R/W-0h							

Table 6-1409. RCSS_CSI2A_CTX0_LINE_PING_PONG Register Field Descriptions

Bit	Field	Type	Reset	Description
31-17	RESERVED	R/W	X	
16	enable	R/W	0h	Enable line based ping pong toggle for Context 0 0 : Disabled 1:Enabled
15-0	num_lines	R/W	0h	Configure the number of lines for ping pong toggle for Context 0

6.2.8.29 RCSS_CSI2A_CTX1_LINE_PING_PONG Register (Offset = 74h) [reset = X]

RCSS_CSI2A_CTX1_LINE_PING_PONG is shown in Figure 6-1402 and described in Table 6-1410.

Return to the Summary Table.

Figure 6-1402. RCSS_CSI2A_CTX1_LINE_PING_PONG Register

31	30	29	28	27	26	25	24
RESERVED							
R/W-X							
23	22	21	20	19	18	17	16
RESERVED							enable
R/W-X							R/W-0h
15	14	13	12	11	10	9	8
num_lines							
R/W-0h							
7	6	5	4	3	2	1	0
num_lines							
R/W-0h							

Table 6-1410. RCSS_CSI2A_CTX1_LINE_PING_PONG Register Field Descriptions

Bit	Field	Type	Reset	Description
31-17	RESERVED	R/W	X	

Copyright © 2025 Texas Instruments Incorporated

Table 6-1410. RCSS_CSI2A_CTX1_LINE_PING_PONG Register Field Descriptions (continued)

Bit	Field	Type	Reset	Description
16	enable	R/W	0h	Enable line based ping pong toggle for Context 1 0 : Disabled 1:Enabled
15-0	num_lines	R/W	0h	Configure the number of lines for ping pong toggle for Context 1

6.2.8.30 RCSS_CSI2A_CTX2_LINE_PING_PONG Register (Offset = 78h) [reset = X]

RCSS_CSI2A_CTX2_LINE_PING_PONG is shown in Figure 6-1403 and described in Table 6-1411.

Return to the Summary Table.

Figure 6-1403. RCSS_CSI2A_CTX2_LINE_PING_PONG Register

31	30	29	28	27	26	25	24
RESERVED							
R/W-X							
23	22	21	20	19	18	17	16
RESERVED							enable
R/W-X							R/W-0h
15	14	13	12	11	10	9	8
num_lines							
R/W-0h							
7	6	5	4	3	2	1	0
num_lines							
R/W-0h							

Table 6-1411. RCSS_CSI2A_CTX2_LINE_PING_PONG Register Field Descriptions

Bit	Field	Type	Reset	Description
31-17	RESERVED	R/W	X	
16	enable	R/W	0h	Enable line based ping pong toggle for Context 2 0 : Disabled 1:Enabled
15-0	num_lines	R/W	0h	Configure the number of lines for ping pong toggle for Context 2

6.2.8.31 RCSS_CSI2A_CTX3_LINE_PING_PONG Register (Offset = 7Ch) [reset = X]

RCSS_CSI2A_CTX3_LINE_PING_PONG is shown in Figure 6-1404 and described in Table 6-1412.

Return to the Summary Table.

Figure 6-1404. RCSS_CSI2A_CTX3_LINE_PING_PONG Register

31	30	29	28	27	26	25	24
RESERVED							
R/W-X							
23	22	21	20	19	18	17	16
RESERVED							enable
R/W-X							R/W-0h
15	14	13	12	11	10	9	8
num_lines							
R/W-0h							

Copyright © 2025 Texas Instruments Incorporated

Figure 6-1404. RCSS_CSI2A_CTX3_LINE_PING_PONG Register (continued)

7	6	5	4	3	2	1	0
num_lines							
R/W-0h							

Table 6-1412. RCSS_CSI2A_CTX3_LINE_PING_PONG Register Field Descriptions

Bit	Field	Type	Reset	Description
31-17	RESERVED	R/W	X	
16	enable	R/W	0h	Enable line based ping pong toggle for Context 3 0 : Disabled 1:Enabled
15-0	num_lines	R/W	0h	Configure the number of lines for ping pong toggle for Context 3

6.2.8.32 RCSS_CSI2A_CTX4_LINE_PING_PONG Register (Offset = 80h) [reset = X]

RCSS_CSI2A_CTX4_LINE_PING_PONG is shown in Figure 6-1405 and described in Table 6-1413.

Return to the Summary Table.

Figure 6-1405. RCSS_CSI2A_CTX4_LINE_PING_PONG Register

31	30	29	28	27	26	25	24
RESERVED							
R/W-X							
23	22	21	20	19	18	17	16
RESERVED							enable
R/W-X							R/W-0h
15	14	13	12	11	10	9	8
num_lines							
R/W-0h							
7	6	5	4	3	2	1	0
num_lines							
R/W-0h							

Table 6-1413. RCSS_CSI2A_CTX4_LINE_PING_PONG Register Field Descriptions

Bit	Field	Type	Reset	Description
31-17	RESERVED	R/W	X	
16	enable	R/W	0h	Enable line based ping pong toggle for Context 4 0 : Disabled 1:Enabled
15-0	num_lines	R/W	0h	Configure the number of lines for ping pong toggle for Context 4

6.2.8.33 RCSS_CSI2A_CTX5_LINE_PING_PONG Register (Offset = 84h) [reset = X]

RCSS_CSI2A_CTX5_LINE_PING_PONG is shown in Figure 6-1406 and described in Table 6-1414.

Return to the Summary Table.

Figure 6-1406. RCSS_CSI2A_CTX5_LINE_PING_PONG Register

31	30	29	28	27	26	25	24
RESERVED							
R/W-X							
23	22	21	20	19	18	17	16

Copyright © 2025 Texas Instruments Incorporated

Figure 6-1406. RCSS_CSI2A_CTX5_LINE_PING_PONG Register (continued)

RESERVED							enable
R/W-X							R/W-0h
15	14	13	12	11	10	9	8
num_lines							
R/W-0h							
7	6	5	4	3	2	1	0
num_lines							
R/W-0h							

Table 6-1414. RCSS_CSI2A_CTX5_LINE_PING_PONG Register Field Descriptions

Bit	Field	Type	Reset	Description
31-17	RESERVED	R/W	X	
16	enable	R/W	0h	Enable line based ping pong toggle for Context 5 0 : Disabled 1:Enabled
15-0	num_lines	R/W	0h	Configure the number of lines for ping pong toggle for Context 5

6.2.8.34 RCSS_CSI2A_CTX6_LINE_PING_PONG Register (Offset = 88h) [reset = X]

RCSS_CSI2A_CTX6_LINE_PING_PONG is shown in Figure 6-1407 and described in Table 6-1415.

Return to the Summary Table.

Figure 6-1407. RCSS_CSI2A_CTX6_LINE_PING_PONG Register

31	30	29	28	27	26	25	24
RESERVED							
R/W-X							
23	22	21	20	19	18	17	16
RESERVED							enable
R/W-X							R/W-0h
15	14	13	12	11	10	9	8
num_lines							
R/W-0h							
7	6	5	4	3	2	1	0
num_lines							
R/W-0h							

Table 6-1415. RCSS_CSI2A_CTX6_LINE_PING_PONG Register Field Descriptions

Bit	Field	Type	Reset	Description
31-17	RESERVED	R/W	X	
16	enable	R/W	0h	Enable line based ping pong toggle for Context 6 0 : Disabled 1:Enabled
15-0	num_lines	R/W	0h	Configure the number of lines for ping pong toggle for Context 6

6.2.8.35 RCSS_CSI2A_CTX7_LINE_PING_PONG Register (Offset = 8Ch) [reset = X]

RCSS_CSI2A_CTX7_LINE_PING_PONG is shown in Figure 6-1408 and described in Table 6-1416.

Copyright © 2025 Texas Instruments Incorporated

Return to the Summary Table.

Figure 6-1408. RCSS_CSI2A_CTX7_LINE_PING_PONG Register

31	30	29	28	27	26	25	24
RESERVED							
R/W-X							
23	22	21	20	19	18	17	16
RESERVED							enable
R/W-X							R/W-0h
15	14	13	12	11	10	9	8
num_lines							
R/W-0h							
7	6	5	4	3	2	1	0
num_lines							
R/W-0h							

Table 6-1416. RCSS_CSI2A_CTX7_LINE_PING_PONG Register Field Descriptions

Bit	Field	Type	Reset	Description
31-17	RESERVED	R/W	X	
16	enable	R/W	0h	Enable line based ping pong toggle for Context 7 0 : Disabled 1:Enabled
15-0	num_lines	R/W	0h	Configure the number of lines for ping pong toggle for Context 7

6.2.8.36 RCSS_CSI2A_PARITY_CTRL Register (Offset = 90h) [reset = X]

RCSS_CSI2A_PARITY_CTRL is shown in Figure 6-1409 and described in Table 6-1417.

Return to the Summary Table.

Figure 6-1409. RCSS_CSI2A_PARITY_CTRL Register

31	30	29	28	27	26	25	24
RESERVED							
R/W-X							
23	22	21	20	19	18	17	16
RESERVED							fifo_parity_en
R/W-X							R/W-0h
15	14	13	12	11	10	9	8
RESERVED							
R/W-X							
7	6	5	4	3	2	1	0
RESERVED							ctx_parity_en
R/W-X							R/W-0h

Table 6-1417. RCSS_CSI2A_PARITY_CTRL Register Field Descriptions

Bit	Field	Type	Reset	Description
31-17	RESERVED	R/W	X	
16	fifo_parity_en	R/W	0h	Enable Parity for CSI2 FIFO Memory. Write 0x1 : Parity is enabled
15-1	RESERVED	R/W	X	

Copyright © 2025 Texas Instruments Incorporated

Table 6-1417. RCSS_CSI2A_PARITY_CTRL Register Field Descriptions (continued)

Bit	Field	Type	Reset	Description
0	ctx_parity_en	R/W	0h	Enable Parity for CSI2 CTX Memory. Write 0x1 : Parity is enabled

6.2.8.37 RCSS_CSI2A_PARITY_STATUS Register (Offset = 94h) [reset = X]

RCSS_CSI2A_PARITY_STATUS is shown in Figure 6-1410 and described in Table 6-1418.

Return to the Summary Table.

Figure 6-1410. RCSS_CSI2A_PARITY_STATUS Register

31	30	29	28	27	26	25	24
RESERVED							
R-X							
23	22	21	20	19	18	17	16
RESERVED	fifo_parity_addr						
R-X	R-0h						
15	14	13	12	11	10	9	8
RESERVED							
R-X							
7	6	5	4	3	2	1	0
RESERVED				ctx_parity_addr			
R-X				R-0h			

Table 6-1418. RCSS_CSI2A_PARITY_STATUS Register Field Descriptions

Bit	Field	Type	Reset	Description
31-23	RESERVED	R	X	
22-16	fifo_parity_addr	R	0h	CSI2 FIFO Memory Error Address at which Parity Error occurred
15-4	RESERVED	R	X	
3-0	ctx_parity_addr	R	0h	CSI2 CTX Memory Error Address at which Parity Error occurred

6.2.8.38 RCSS_CSI2B_CTX0_LINE_PING_PONG Register (Offset = 98h) [reset = X]

RCSS_CSI2B_CTX0_LINE_PING_PONG is shown in Figure 6-1411 and described in Table 6-1419.

Return to the Summary Table.

Figure 6-1411. RCSS_CSI2B_CTX0_LINE_PING_PONG Register

31	30	29	28	27	26	25	24
RESERVED							
R/W-X							
23	22	21	20	19	18	17	16
RESERVED							enable
R/W-X							R/W-0h
15	14	13	12	11	10	9	8
num_lines							
R/W-0h							
7	6	5	4	3	2	1	0
num_lines							

Copyright © 2025 Texas Instruments Incorporated

Figure 6-1411. RCSS_CSI2B_CTX0_LINE_PING_PONG Register (continued)

R/W-0h

Table 6-1419. RCSS_CSI2B_CTX0_LINE_PING_PONG Register Field Descriptions

Bit	Field	Type	Reset	Description
31-17	RESERVED	R/W	X	
16	enable	R/W	0h	Enable line based ping pong toggle for Context 0 0 : Disabled 1:Enabled
15-0	num_lines	R/W	0h	Configure the number of lines for ping pong toggle for Context 0

6.2.8.39 RCSS_CSI2B_CTX1_LINE_PING_PONG Register (Offset = 9Ch) [reset = X]

RCSS_CSI2B_CTX1_LINE_PING_PONG is shown in Figure 6-1412 and described in Table 6-1420.

Return to the Summary Table.

Figure 6-1412. RCSS_CSI2B_CTX1_LINE_PING_PONG Register

31	30	29	28	27	26	25	24
RESERVED							
R/W-X							
23	22	21	20	19	18	17	16
RESERVED							enable
R/W-X							R/W-0h
15	14	13	12	11	10	9	8
num_lines							
R/W-0h							
7	6	5	4	3	2	1	0
num_lines							
R/W-0h							

Table 6-1420. RCSS_CSI2B_CTX1_LINE_PING_PONG Register Field Descriptions

Bit	Field	Type	Reset	Description
31-17	RESERVED	R/W	X	
16	enable	R/W	0h	Enable line based ping pong toggle for Context 1 0 : Disabled 1:Enabled
15-0	num_lines	R/W	0h	Configure the number of lines for ping pong toggle for Context 1

6.2.8.40 RCSS_CSI2B_CTX2_LINE_PING_PONG Register (Offset = A0h) [reset = X]

RCSS_CSI2B_CTX2_LINE_PING_PONG is shown in Figure 6-1413 and described in Table 6-1421.

Return to the Summary Table.

Figure 6-1413. RCSS_CSI2B_CTX2_LINE_PING_PONG Register

31	30	29	28	27	26	25	24
RESERVED							
R/W-X							
23	22	21	20	19	18	17	16
RESERVED							enable
R/W-X							R/W-0h

Copyright © 2025 Texas Instruments Incorporated

Figure 6-1413. RCSS_CSI2B_CTX2_LINE_PING_PONG Register (continued)

15	14	13	12	11	10	9	8
num_lines							
R/W-0h							
7	6	5	4	3	2	1	0
num_lines							
R/W-0h							

Table 6-1421. RCSS_CSI2B_CTX2_LINE_PING_PONG Register Field Descriptions

Bit	Field	Type	Reset	Description
31-17	RESERVED	R/W	X	
16	enable	R/W	0h	Enable line based ping pong toggle for Context 2 0 : Disabled 1:Enabled
15-0	num_lines	R/W	0h	Configure the number of lines for ping pong toggle for Context 2

6.2.8.41 RCSS_CSI2B_CTX3_LINE_PING_PONG Register (Offset = A4h) [reset = X]

RCSS_CSI2B_CTX3_LINE_PING_PONG is shown in Figure 6-1414 and described in Table 6-1422.

Return to the Summary Table.

Figure 6-1414. RCSS_CSI2B_CTX3_LINE_PING_PONG Register

31	30	29	28	27	26	25	24
RESERVED							
R/W-X							
23	22	21	20	19	18	17	16
RESERVED							enable
R/W-X							R/W-0h
15	14	13	12	11	10	9	8
num_lines							
R/W-0h							
7	6	5	4	3	2	1	0
num_lines							
R/W-0h							

Table 6-1422. RCSS_CSI2B_CTX3_LINE_PING_PONG Register Field Descriptions

Bit	Field	Type	Reset	Description
31-17	RESERVED	R/W	X	
16	enable	R/W	0h	Enable line based ping pong toggle for Context 3 0 : Disabled 1:Enabled
15-0	num_lines	R/W	0h	Configure the number of lines for ping pong toggle for Context 3

6.2.8.42 RCSS_CSI2B_CTX4_LINE_PING_PONG Register (Offset = A8h) [reset = X]

RCSS_CSI2B_CTX4_LINE_PING_PONG is shown in Figure 6-1415 and described in Table 6-1423.

Return to the Summary Table.

Figure 6-1415. RCSS_CSI2B_CTX4_LINE_PING_PONG Register

31	30	29	28	27	26	25	24

Copyright © 2025 Texas Instruments Incorporated

Figure 6-1415. RCSS_CSI2B_CTX4_LINE_PING_PONG Register (continued)

RESERVED							
R/W-X							
23	22	21	20	19	18	17	16
RESERVED							enable
R/W-X							R/W-0h
15	14	13	12	11	10	9	8
num_lines							
R/W-0h							
7	6	5	4	3	2	1	0
num_lines							
R/W-0h							

Table 6-1423. RCSS_CSI2B_CTX4_LINE_PING_PONG Register Field Descriptions

Bit	Field	Type	Reset	Description
31-17	RESERVED	R/W	X	
16	enable	R/W	0h	Enable line based ping pong toggle for Context 4 0 : Disabled 1:Enabled
15-0	num_lines	R/W	0h	Configure the number of lines for ping pong toggle for Context 4

6.2.8.43 RCSS_CSI2B_CTX5_LINE_PING_PONG Register (Offset = ACh) [reset = X]

RCSS_CSI2B_CTX5_LINE_PING_PONG is shown in Figure 6-1416 and described in Table 6-1424.

Return to the Summary Table.

Figure 6-1416. RCSS_CSI2B_CTX5_LINE_PING_PONG Register

31	30	29	28	27	26	25	24
RESERVED							
R/W-X							
23	22	21	20	19	18	17	16
RESERVED							enable
R/W-X							R/W-0h
15	14	13	12	11	10	9	8
num_lines							
R/W-0h							
7	6	5	4	3	2	1	0
num_lines							
R/W-0h							

Table 6-1424. RCSS_CSI2B_CTX5_LINE_PING_PONG Register Field Descriptions

Bit	Field	Type	Reset	Description
31-17	RESERVED	R/W	X	
16	enable	R/W	0h	Enable line based ping pong toggle for Context 5 0 : Disabled 1:Enabled
15-0	num_lines	R/W	0h	Configure the number of lines for ping pong toggle for Context 5

Copyright © 2025 Texas Instruments Incorporated

6.2.8.44 RCSS_CSI2B_CTX6_LINE_PING_PONG Register (Offset = B0h) [reset = X]

RCSS_CSI2B_CTX6_LINE_PING_PONG is shown in Figure 6-1417 and described in Table 6-1425.

Return to the Summary Table.

Figure 6-1417. RCSS_CSI2B_CTX6_LINE_PING_PONG Register

31	30	29	28	27	26	25	24
RESERVED							
R/W-X							
23	22	21	20	19	18	17	16
RESERVED							enable
R/W-X							R/W-0h
15	14	13	12	11	10	9	8
num_lines							
R/W-0h							
7	6	5	4	3	2	1	0
num_lines							
R/W-0h							

Table 6-1425. RCSS_CSI2B_CTX6_LINE_PING_PONG Register Field Descriptions

Bit	Field	Type	Reset	Description
31-17	RESERVED	R/W	X	
16	enable	R/W	0h	Enable line based ping pong toggle for Context 6 0 : Disabled 1:Enabled
15-0	num_lines	R/W	0h	Configure the number of lines for ping pong toggle for Context 6

6.2.8.45 RCSS_CSI2B_CTX7_LINE_PING_PONG Register (Offset = B4h) [reset = X]

RCSS_CSI2B_CTX7_LINE_PING_PONG is shown in Figure 6-1418 and described in Table 6-1426.

Return to the Summary Table.

Figure 6-1418. RCSS_CSI2B_CTX7_LINE_PING_PONG Register

31	30	29	28	27	26	25	24
RESERVED							
R/W-X							
23	22	21	20	19	18	17	16
RESERVED							enable
R/W-X							R/W-0h
15	14	13	12	11	10	9	8
num_lines							
R/W-0h							
7	6	5	4	3	2	1	0
num_lines							
R/W-0h							

Table 6-1426. RCSS_CSI2B_CTX7_LINE_PING_PONG Register Field Descriptions

Bit	Field	Type	Reset	Description
31-17	RESERVED	R/W	X	

Copyright © 2025 Texas Instruments Incorporated

Table 6-1426. RCSS_CSI2B_CTX7_LINE_PING_PONG Register Field Descriptions (continued)

Bit	Field	Type	Reset	Description
16	enable	R/W	0h	Enable line based ping pong toggle for Context 7 0 : Disabled 1:Enabled
15-0	num_lines	R/W	0h	Configure the number of lines for ping pong toggle for Context 7

6.2.8.46 RCSS_CSI2B_PARITY_CTRL Register (Offset = B8h) [reset = X]

RCSS_CSI2B_PARITY_CTRL is shown in Figure 6-1419 and described in Table 6-1427.

Return to the Summary Table.

Figure 6-1419. RCSS_CSI2B_PARITY_CTRL Register

31	30	29	28	27	26	25	24
RESERVED							
R/W-X							
23	22	21	20	19	18	17	16
RESERVED							fifo_parity_en
R/W-X							R/W-0h
15	14	13	12	11	10	9	8
RESERVED							
R/W-X							
7	6	5	4	3	2	1	0
RESERVED							ctx_parity_en
R/W-X							R/W-0h

Table 6-1427. RCSS_CSI2B_PARITY_CTRL Register Field Descriptions

Bit	Field	Type	Reset	Description
31-17	RESERVED	R/W	X	
16	fifo_parity_en	R/W	0h	Enable Parity for CSI2 FIFO Memory. Write 0x1 : Parity is enabled
15-1	RESERVED	R/W	X	
0	ctx_parity_en	R/W	0h	Enable Parity for CSI2 CTX Memory. Write 0x1 : Parity is enabled

6.2.8.47 RCSS_CSI2B_PARITY_STATUS Register (Offset = BCh) [reset = X]

RCSS_CSI2B_PARITY_STATUS is shown in Figure 6-1420 and described in Table 6-1428.

Return to the Summary Table.

Figure 6-1420. RCSS_CSI2B_PARITY_STATUS Register

31	30	29	28	27	26	25	24
RESERVED							
R-X							
23	22	21	20	19	18	17	16
RESERVED	fifo_parity_addr						
R-X	R-0h						
15	14	13	12	11	10	9	8
RESERVED							
R-X							

Copyright © 2025 Texas Instruments Incorporated

Figure 6-1420. RCSS_CSI2B_PARITY_STATUS Register (continued)

7	6	5	4	3	2	1	0
RESERVED				ctx_parity_addr			
R-X				R-0h			

Table 6-1428. RCSS_CSI2B_PARITY_STATUS Register Field Descriptions

Bit	Field	Type	Reset	Description
31-23	RESERVED	R	X	
22-16	fifo_parity_addr	R	0h	CSI2 FIFO Memory Error Address at which Parity Error occurred
15-4	RESERVED	R	X	
3-0	ctx_parity_addr	R	0h	CSI2 CTX Memory Error Address at which Parity Error occurred

6.2.8.48 RCSS_CSI2A_LANE0_CFG Register (Offset = C0h) [reset = X]

RCSS_CSI2A_LANE0_CFG is shown in Figure 6-1421 and described in Table 6-1429.

Return to the Summary Table.

Figure 6-1421. RCSS_CSI2A_LANE0_CFG Register

31	30	29	28	27	26	25	24
RESERVED							
R/W-X							
23	22	21	20	19	18	17	16
RESERVED				dy0_wuevnt	dy0_wuen	dy0_ie	dy0_in
R/W-X				R-0h	R/W-0h	R/W-0h	R-0h
15	14	13	12	11	10	9	8
dy0_enbpd	dy0_enbpu	dx0_wuclkout	dx0_wuout	dx0_isoclkout	dx0_isoout	dx0_wuevnt	dx0_wuen
R/W-0h	R/W-1h	R-0h	R-0h	R-0h	R-0h	R-0h	R/W-0h
7	6	5	4	3	2	1	0
dx0_wuclkin	dx0_wuin	dx0_isoclkin	dx0_isoin	dx0_ie	dx0_in	dx0_enbpd	dx0_enbpu
R/W-0h	R/W-0h	R/W-0h	R/W-0h	R/W-0h	R-0h	R/W-0h	R/W-1h

Table 6-1429. RCSS_CSI2A_LANE0_CFG Register Field Descriptions

Bit	Field	Type	Reset	Description
31-20	RESERVED	R/W	X	
19	dy0_wuevnt	R	0h	Pad DY Wake up Event
18	dy0_wuen	R/W	0h	Pad DY Wake up Enable
17	dy0_ie	R/W	0h	Pad DY Input Buffer Enable
16	dy0_in	R	0h	Pad DY Input
15	dy0_enbpd	R/W	0h	Pad DY Enable Pull Down
14	dy0_enbpu	R/W	1h	Pad DY Enable Pull Up
13	dx0_wuclkout	R	0h	Pad DX Wake up Clkout
12	dx0_wuout	R	0h	Pad DX Wake up Output
11	dx0_isoclkout	R	0h	Pad DX Isolation Clkout
10	dx0_isoout	R	0h	Pad DX Isolation Output
9	dx0_wuevnt	R	0h	Pad DX Wake up Event
8	dx0_wuen	R/W	0h	Pad DX Wake up Enable
7	dx0_wuclkin	R/W	0h	Pad DX Wake up Clkin

Copyright © 2025 Texas Instruments Incorporated

Table 6-1429. RCSS_CSI2A_LANE0_CFG Register Field Descriptions (continued)

Bit	Field	Type	Reset	Description
6	dx0_wuin	R/W	0h	Pad DX Wake up Input
5	dx0_isoclkin	R/W	0h	Pad DX Isolation Clkin
4	dx0_isoin	R/W	0h	Pad DX Isolation Input
3	dx0_ie	R/W	0h	Pad DX Input Buffer Enable
2	dx0_in	R	0h	Pad DX Input
1	dx0_enbpd	R/W	0h	Pad DX Enable Pull Down
0	dx0_enbpu	R/W	1h	Pad DX Enable Pull Up

6.2.8.49 RCSS_CSI2A_LANE1_CFG Register (Offset = C4h) [reset = X]

RCSS_CSI2A_LANE1_CFG is shown in Figure 6-1422 and described in Table 6-1430.

Return to the Summary Table.

Figure 6-1422. RCSS_CSI2A_LANE1_CFG Register

31	30	29	28	27	26	25	24
RESERVED							
R/W-X							
23	22	21	20	19	18	17	16
RESERVED				dy1_wuevnt	dy1_wuen	dy1_ie	dy1_in
R/W-X				R-0h	R/W-0h	R/W-0h	R-0h
15	14	13	12	11	10	9	8
dy1_enbpd	dy1_enbpu	dx1_wuclkout	dx1_wuout	dx1_isoclkout	dx1_isoout	dx1_wuevnt	dx1_wuen
R/W-0h	R/W-1h	R-0h	R-0h	R-0h	R-0h	R-0h	R/W-0h
7	6	5	4	3	2	1	0
dx1_wuclkin	dx1_wuin	dx1_isoclkin	dx1_isoin	dx1_ie	dx1_in	dx1_enbpd	dx1_enbpu
R/W-0h	R/W-0h	R/W-0h	R/W-0h	R/W-0h	R-0h	R/W-0h	R/W-1h

Table 6-1430. RCSS_CSI2A_LANE1_CFG Register Field Descriptions

Bit	Field	Type	Reset	Description
31-20	RESERVED	R/W	X	
19	dy1_wuevnt	R	0h	Pad DY Wake up Event
18	dy1_wuen	R/W	0h	Pad DY Wake up Enable
17	dy1_ie	R/W	0h	Pad DY Input Buffer Enable
16	dy1_in	R	0h	Pad DY Input
15	dy1_enbpd	R/W	0h	Pad DY Enable Pull Down
14	dy1_enbpu	R/W	1h	Pad DY Enable Pull Up
13	dx1_wuclkout	R	0h	Pad DX Wake up Clkout
12	dx1_wuout	R	0h	Pad DX Wake up Output
11	dx1_isoclkout	R	0h	Pad DX Isolation Clkout
10	dx1_isoout	R	0h	Pad DX Isolation Output
9	dx1_wuevnt	R	0h	Pad DX Wake up Event
8	dx1_wuen	R/W	0h	Pad DX Wake up Enable
7	dx1_wuclkin	R/W	0h	Pad DX Wake up Clkin
6	dx1_wuin	R/W	0h	Pad DX Wake up Input
5	dx1_isoclkin	R/W	0h	Pad DX Isolation Clkin

Copyright © 2025 Texas Instruments Incorporated

Table 6-1430. RCSS_CSI2A_LANE1_CFG Register Field Descriptions (continued)

Bit	Field	Type	Reset	Description
4	dx1_isoin	R/W	0h	Pad DX Isolation Input
3	dx1_ie	R/W	0h	Pad DX Input Buffer Enable
2	dx1_in	R	0h	Pad DX Input
1	dx1_enbpd	R/W	0h	Pad DX Enable Pull Down
0	dx1_enbpu	R/W	1h	Pad DX Enable Pull Up

6.2.8.50 RCSS_CSI2A_LANE2_CFG Register (Offset = C8h) [reset = X]

RCSS_CSI2A_LANE2_CFG is shown in Figure 6-1423 and described in Table 6-1431.

Return to the Summary Table.

Figure 6-1423. RCSS_CSI2A_LANE2_CFG Register

31	30	29	28	27	26	25	24
RESERVED							
R/W-X							
23	22	21	20	19	18	17	16
RESERVED				dy2_wuevnt	dy2_wuen	dy2_ie	dy2_in
R/W-X				R-0h	R/W-0h	R/W-0h	R-0h
15	14	13	12	11	10	9	8
dy2_enbpd	dy2_enbpu	RESERVED				dx2_wuevnt	dx2_wuen
R/W-0h	R/W-1h	R/W-X				R-0h	R/W-0h
7	6	5	4	3	2	1	0
dx2_wuclkin	dx2_wuin	dx2_isoclkin	dx2_isoin	dx2_ie	dx2_in	dx2_enbpd	dx2_enbpu
R/W-0h	R/W-0h	R/W-0h	R/W-0h	R/W-0h	R-0h	R/W-0h	R/W-1h

Table 6-1431. RCSS_CSI2A_LANE2_CFG Register Field Descriptions

Bit	Field	Type	Reset	Description
31-20	RESERVED	R/W	X	
19	dy2_wuevnt	R	0h	Pad DY Wake up Event
18	dy2_wuen	R/W	0h	Pad DY Wake up Enable
17	dy2_ie	R/W	0h	Pad DY Input Buffer Enable
16	dy2_in	R	0h	Pad DY Input
15	dy2_enbpd	R/W	0h	Pad DY Enable Pull Down
14	dy2_enbpu	R/W	1h	Pad DY Enable Pull Up
13-10	RESERVED	R/W	X	
9	dx2_wuevnt	R	0h	Pad DX Wake up Event
8	dx2_wuen	R/W	0h	Pad DX Wake up Enable
7	dx2_wuclkin	R/W	0h	Pad DX Wake up Clkin
6	dx2_wuin	R/W	0h	Pad DX Wake up Input
5	dx2_isoclkin	R/W	0h	Pad DX Isolation Clkin
4	dx2_isoin	R/W	0h	Pad DX Isolation Input
3	dx2_ie	R/W	0h	Pad DX Input Buffer Enable
2	dx2_in	R	0h	Pad DX Input
1	dx2_enbpd	R/W	0h	Pad DX Enable Pull Down

Copyright © 2025 Texas Instruments Incorporated

Table 6-1431. RCSS_CSI2A_LANE2_CFG Register Field Descriptions (continued)

Bit	Field	Type	Reset	Description
0	dx2_enbpu	R/W	1h	Pad DX Enable Pull Up

6.2.8.51 RCSS_CSI2A_LANE3_CFG Register (Offset = CCh) [reset = X]

RCSS_CSI2A_LANE3_CFG is shown in Figure 6-1424 and described in Table 6-1432.

Return to the Summary Table.

Figure 6-1424. RCSS_CSI2A_LANE3_CFG Register

31	30	29	28	27	26	25	24
RESERVED							
R/W-X							
23	22	21	20	19	18	17	16
RESERVED				dy3_wuevnt	dy3_wuen	dy3_ie	dy3_in
R/W-X				R-0h	R/W-0h	R/W-0h	R-0h
15	14	13	12	11	10	9	8
dy3_enbpd	dy3_enbpu	dx3_wuclkout	dx3_wuout	dx3_isoclkout	dx3_isoout	dx3_wuevnt	dx3_wuen
R/W-0h	R/W-1h	R-0h	R-0h	R-0h	R-0h	R-0h	R/W-0h
7	6	5	4	3	2	1	0
dx3_wuclkin	dx3_wuin	dx3_isoclkin	dx3_isoin	dx3_ie	dx3_in	dx3_enbpd	dx3_enbpu
R/W-0h	R/W-0h	R/W-0h	R/W-0h	R/W-0h	R-0h	R/W-0h	R/W-1h

Table 6-1432. RCSS_CSI2A_LANE3_CFG Register Field Descriptions

Bit	Field	Type	Reset	Description
31-20	RESERVED	R/W	X	
19	dy3_wuevnt	R	0h	Pad DY Wake up Event
18	dy3_wuen	R/W	0h	Pad DY Wake up Enable
17	dy3_ie	R/W	0h	Pad DY Input Buffer Enable
16	dy3_in	R	0h	Pad DY Input
15	dy3_enbpd	R/W	0h	Pad DY Enable Pull Down
14	dy3_enbpu	R/W	1h	Pad DY Enable Pull Up
13	dx3_wuclkout	R	0h	Pad DX Wake up Clkout
12	dx3_wuout	R	0h	Pad DX Wake up Output
11	dx3_isoclkout	R	0h	Pad DX Isolation Clkout
10	dx3_isoout	R	0h	Pad DX Isolation Output
9	dx3_wuevnt	R	0h	Pad DX Wake up Event
8	dx3_wuen	R/W	0h	Pad DX Wake up Enable
7	dx3_wuclkin	R/W	0h	Pad DX Wake up Clkin
6	dx3_wuin	R/W	0h	Pad DX Wake up Input
5	dx3_isoclkin	R/W	0h	Pad DX Isolation Clkin
4	dx3_isoin	R/W	0h	Pad DX Isolation Input
3	dx3_ie	R/W	0h	Pad DX Input Buffer Enable
2	dx3_in	R	0h	Pad DX Input
1	dx3_enbpd	R/W	0h	Pad DX Enable Pull Down
0	dx3_enbpu	R/W	1h	Pad DX Enable Pull Up

Copyright © 2025 Texas Instruments Incorporated

6.2.8.52 RCSS_CSI2A_LANE4_CFG Register (Offset = D0h) [reset = X]

RCSS_CSI2A_LANE4_CFG is shown in Figure 6-1425 and described in Table 6-1433.

Return to the Summary Table.

Figure 6-1425. RCSS_CSI2A_LANE4_CFG Register

31	30	29	28	27	26	25	24
RESERVED							
R/W-X							
23	22	21	20	19	18	17	16
RESERVED				dy4_wuevnt	dy4_wuen	dy4_ie	dy4_in
R/W-X				R-0h	R/W-0h	R/W-0h	R-0h
15	14	13	12	11	10	9	8
dy4_enbpd	dy4_enbpu	dx4_wuclkout	dx4_wuout	dx4_isoclkout	dx4_isoout	dx4_wuevnt	dx4_wuen
R/W-0h	R/W-1h	R-0h	R-0h	R-0h	R-0h	R-0h	R/W-0h
7	6	5	4	3	2	1	0
dx4_wuclkin	dx4_wuin	dx4_isoclkin	dx4_isoin	dx4_ie	dx4_in	dx4_enbpd	dx4_enbpu
R/W-0h	R/W-0h	R/W-0h	R/W-0h	R/W-0h	R-0h	R/W-0h	R/W-1h

Table 6-1433. RCSS_CSI2A_LANE4_CFG Register Field Descriptions

Bit	Field	Type	Reset	Description
31-20	RESERVED	R/W	X	
19	dy4_wuevnt	R	0h	Pad DY Wake up Event
18	dy4_wuen	R/W	0h	Pad DY Wake up Enable
17	dy4_ie	R/W	0h	Pad DY Input Buffer Enable
16	dy4_in	R	0h	Pad DY Input
15	dy4_enbpd	R/W	0h	Pad DY Enable Pull Down
14	dy4_enbpu	R/W	1h	Pad DY Enable Pull Up
13	dx4_wuclkout	R	0h	Pad DX Wake up Clkout
12	dx4_wuout	R	0h	Pad DX Wake up Output
11	dx4_isoclkout	R	0h	Pad DX Isolation Clkout
10	dx4_isoout	R	0h	Pad DX Isolation Output
9	dx4_wuevnt	R	0h	Pad DX Wake up Event
8	dx4_wuen	R/W	0h	Pad DX Wake up Enable
7	dx4_wuclkin	R/W	0h	Pad DX Wake up Clkin
6	dx4_wuin	R/W	0h	Pad DX Wake up Input
5	dx4_isoclkin	R/W	0h	Pad DX Isolation Clkin
4	dx4_isoin	R/W	0h	Pad DX Isolation Input
3	dx4_ie	R/W	0h	Pad DX Input Buffer Enable
2	dx4_in	R	0h	Pad DX Input
1	dx4_enbpd	R/W	0h	Pad DX Enable Pull Down
0	dx4_enbpu	R/W	1h	Pad DX Enable Pull Up

6.2.8.53 RCSS_CSI2B_LANE0_CFG Register (Offset = D4h) [reset = X]

RCSS_CSI2B_LANE0_CFG is shown in Figure 6-1426 and described in Table 6-1434.

Return to the Summary Table.

Copyright © 2025 Texas Instruments Incorporated

Figure 6-1426. RCSS_CSI2B_LANE0_CFG Register

31	30	29	28	27	26	25	24
RESERVED							
R/W-X							
23	22	21	20	19	18	17	16
RESERVED				dy0_wuevnt	dy0_wuen	dy0_ie	dy0_in
R/W-X				R-0h	R/W-0h	R/W-0h	R-0h
15	14	13	12	11	10	9	8
dy0_enbpd	dy0_enbpu	dx0_wuclkout	dx0_wuout	dx0_isoclkout	dx0_isoout	dx0_wuevnt	dx0_wuen
R/W-0h	R/W-1h	R-0h	R-0h	R-0h	R-0h	R-0h	R/W-0h
7	6	5	4	3	2	1	0
dx0_wuclkin	dx0_wuin	dx0_isoclkin	dx0_isoin	dx0_ie	dx0_in	dx0_enbpd	dx0_enbpu
R/W-0h	R/W-0h	R/W-0h	R/W-0h	R/W-0h	R-0h	R/W-0h	R/W-1h

Table 6-1434. RCSS_CSI2B_LANE0_CFG Register Field Descriptions

Bit	Field	Type	Reset	Description
31-20	RESERVED	R/W	X	
19	dy0_wuevnt	R	0h	Pad DY Wake up Event
18	dy0_wuen	R/W	0h	Pad DY Wake up Enable
17	dy0_ie	R/W	0h	Pad DY Input Buffer Enable
16	dy0_in	R	0h	Pad DY Input
15	dy0_enbpd	R/W	0h	Pad DY Enable Pull Down
14	dy0_enbpu	R/W	1h	Pad DY Enable Pull Up
13	dx0_wuclkout	R	0h	Pad DX Wake up Clkout
12	dx0_wuout	R	0h	Pad DX Wake up Output
11	dx0_isoclkout	R	0h	Pad DX Isolation Clkout
10	dx0_isoout	R	0h	Pad DX Isolation Output
9	dx0_wuevnt	R	0h	Pad DX Wake up Event
8	dx0_wuen	R/W	0h	Pad DX Wake up Enable
7	dx0_wuclkin	R/W	0h	Pad DX Wake up Clkin
6	dx0_wuin	R/W	0h	Pad DX Wake up Input
5	dx0_isoclkin	R/W	0h	Pad DX Isolation Clkin
4	dx0_isoin	R/W	0h	Pad DX Isolation Input
3	dx0_ie	R/W	0h	Pad DX Input Buffer Enable
2	dx0_in	R	0h	Pad DX Input
1	dx0_enbpd	R/W	0h	Pad DX Enable Pull Down
0	dx0_enbpu	R/W	1h	Pad DX Enable Pull Up

6.2.8.54 RCSS_CSI2B_LANE1_CFG Register (Offset = D8h) [reset = X]

RCSS_CSI2B_LANE1_CFG is shown in Figure 6-1427 and described in Table 6-1435.

Return to the Summary Table.

Figure 6-1427. RCSS_CSI2B_LANE1_CFG Register

31	30	29	28	27	26	25	24
RESERVED							
R/W-X							

Copyright © 2025 Texas Instruments Incorporated

Figure 6-1427. RCSS_CSI2B_LANE1_CFG Register (continued)

23	22	21	20	19	18	17	16
RESERVED				dy1_wuevnt	dy1_wuen	dy1_ie	dy1_in
R/W-X				R-0h	R/W-0h	R/W-0h	R-0h
15	14	13	12	11	10	9	8
dy1_enbpd	dy1_enbpu	dx1_wuclkout	dx1_wuout	dx1_isoclkout	dx1_isoout	dx1_wuevnt	dx1_wuen
R/W-0h	R/W-1h	R-0h	R-0h	R-0h	R-0h	R-0h	R/W-0h
7	6	5	4	3	2	1	0
dx1_wuclkin	dx1_wuin	dx1_isoclkin	dx1_isoin	dx1_ie	dx1_in	dx1_enbpd	dx1_enbpu
R/W-0h	R/W-0h	R/W-0h	R/W-0h	R/W-0h	R-0h	R/W-0h	R/W-1h

Table 6-1435. RCSS_CSI2B_LANE1_CFG Register Field Descriptions

Bit	Field	Type	Reset	Description
31-20	RESERVED	R/W	X	
19	dy1_wuevnt	R	0h	Pad DY Wake up Event
18	dy1_wuen	R/W	0h	Pad DY Wake up Enable
17	dy1_ie	R/W	0h	Pad DY Input Buffer Enable
16	dy1_in	R	0h	Pad DY Input
15	dy1_enbpd	R/W	0h	Pad DY Enable Pull Down
14	dy1_enbpu	R/W	1h	Pad DY Enable Pull Up
13	dx1_wuclkout	R	0h	Pad DX Wake up Clkout
12	dx1_wuout	R	0h	Pad DX Wake up Output
11	dx1_isoclkout	R	0h	Pad DX Isolation Clkout
10	dx1_isoout	R	0h	Pad DX Isolation Output
9	dx1_wuevnt	R	0h	Pad DX Wake up Event
8	dx1_wuen	R/W	0h	Pad DX Wake up Enable
7	dx1_wuclkin	R/W	0h	Pad DX Wake up Clkin
6	dx1_wuin	R/W	0h	Pad DX Wake up Input
5	dx1_isoclkin	R/W	0h	Pad DX Isolation Clkin
4	dx1_isoin	R/W	0h	Pad DX Isolation Input
3	dx1_ie	R/W	0h	Pad DX Input Buffer Enable
2	dx1_in	R	0h	Pad DX Input
1	dx1_enbpd	R/W	0h	Pad DX Enable Pull Down
0	dx1_enbpu	R/W	1h	Pad DX Enable Pull Up

6.2.8.55 RCSS_CSI2B_LANE2_CFG Register (Offset = DCh) [reset = X]

RCSS_CSI2B_LANE2_CFG is shown in Figure 6-1428 and described in Table 6-1436.

Return to the Summary Table.

Figure 6-1428. RCSS_CSI2B_LANE2_CFG Register

31	30	29	28	27	26	25	24
RESERVED							
R/W-X							
23	22	21	20	19	18	17	16
RESERVED				dy2_wuevnt	dy2_wuen	dy2_ie	dy2_in
R/W-X				R-0h	R/W-0h	R/W-0h	R-0h

Copyright © 2025 Texas Instruments Incorporated

Figure 6-1428. RCSS_CSI2B_LANE2_CFG Register (continued)

15	14	13	12	11	10	9	8
dy2_enbpd	dy2_enbpu	RESERVED				dx2_wuevnt	dx2_wuen
R/W-0h	R/W-1h	R/W-X				R-0h	R/W-0h
7	6	5	4	3	2	1	0
dx2_wuclkin	dx2_wuin	dx2_isoclkin	dx2_isoin	dx2_ie	dx2_in	dx2_enbpd	dx2_enbpu
R/W-0h	R/W-0h	R/W-0h	R/W-0h	R/W-0h	R-0h	R/W-0h	R/W-1h

Table 6-1436. RCSS_CSI2B_LANE2_CFG Register Field Descriptions

Bit	Field	Type	Reset	Description
31-20	RESERVED	R/W	X	
19	dy2_wuevnt	R	0h	Pad DY Wake up Event
18	dy2_wuen	R/W	0h	Pad DY Wake up Enable
17	dy2_ie	R/W	0h	Pad DY Input Buffer Enable
16	dy2_in	R	0h	Pad DY Input
15	dy2_enbpd	R/W	0h	Pad DY Enable Pull Down
14	dy2_enbpu	R/W	1h	Pad DY Enable Pull Up
13-10	RESERVED	R/W	X	
9	dx2_wuevnt	R	0h	Pad DX Wake up Event
8	dx2_wuen	R/W	0h	Pad DX Wake up Enable
7	dx2_wuclkin	R/W	0h	Pad DX Wake up Clkin
6	dx2_wuin	R/W	0h	Pad DX Wake up Input
5	dx2_isoclkin	R/W	0h	Pad DX Isolation Clkin
4	dx2_isoin	R/W	0h	Pad DX Isolation Input
3	dx2_ie	R/W	0h	Pad DX Input Buffer Enable
2	dx2_in	R	0h	Pad DX Input
1	dx2_enbpd	R/W	0h	Pad DX Enable Pull Down
0	dx2_enbpu	R/W	1h	Pad DX Enable Pull Up

6.2.8.56 RCSS_CSI2B_LANE3_CFG Register (Offset = E0h) [reset = X]

RCSS_CSI2B_LANE3_CFG is shown in Figure 6-1429 and described in Table 6-1437.

Return to the Summary Table.

Figure 6-1429. RCSS_CSI2B_LANE3_CFG Register

31	30	29	28	27	26	25	24
RESERVED							
R/W-X							
23	22	21	20	19	18	17	16
RESERVED				dy3_wuevnt	dy3_wuen	dy3_ie	dy3_in
R/W-X				R-0h	R/W-0h	R/W-0h	R-0h
15	14	13	12	11	10	9	8
dy3_enbpd	dy3_enbpu	dx3_wuclkout	dx3_wuout	dx3_isoclkout	dx3_isoout	dx3_wuevnt	dx3_wuen
R/W-0h	R/W-1h	R-0h	R-0h	R-0h	R-0h	R-0h	R/W-0h
7	6	5	4	3	2	1	0
dx3_wuclkin	dx3_wuin	dx3_isoclkin	dx3_isoin	dx3_ie	dx3_in	dx3_enbpd	dx3_enbpu
R/W-0h	R/W-0h	R/W-0h	R/W-0h	R/W-0h	R-0h	R/W-0h	R/W-1h

Copyright © 2025 Texas Instruments Incorporated

Figure 6-1429. RCSS_CSI2B_LANE3_CFG Register (continued)

Table 6-1437. RCSS_CSI2B_LANE3_CFG Register Field Descriptions

Bit	Field	Type	Reset	Description
31-20	RESERVED	R/W	X	
19	dy3_wuevnt	R	0h	Pad DY Wake up Event
18	dy3_wuen	R/W	0h	Pad DY Wake up Enable
17	dy3_ie	R/W	0h	Pad DY Input Buffer Enable
16	dy3_in	R	0h	Pad DY Input
15	dy3_enbpd	R/W	0h	Pad DY Enable Pull Down
14	dy3_enbpu	R/W	1h	Pad DY Enable Pull Up
13	dx3_wuclkout	R	0h	Pad DX Wake up Clkout
12	dx3_wuout	R	0h	Pad DX Wake up Output
11	dx3_isoclkout	R	0h	Pad DX Isolation Clkout
10	dx3_isoout	R	0h	Pad DX Isolation Output
9	dx3_wuevnt	R	0h	Pad DX Wake up Event
8	dx3_wuen	R/W	0h	Pad DX Wake up Enable
7	dx3_wuclkin	R/W	0h	Pad DX Wake up Clkin
6	dx3_wuin	R/W	0h	Pad DX Wake up Input
5	dx3_isoclkin	R/W	0h	Pad DX Isolation Clkin
4	dx3_isoin	R/W	0h	Pad DX Isolation Input
3	dx3_ie	R/W	0h	Pad DX Input Buffer Enable
2	dx3_in	R	0h	Pad DX Input
1	dx3_enbpd	R/W	0h	Pad DX Enable Pull Down
0	dx3_enbpu	R/W	1h	Pad DX Enable Pull Up

6.2.8.57 RCSS_CSI2B_LANE4_CFG Register (Offset = E4h) [reset = X]

RCSS_CSI2B_LANE4_CFG is shown in Figure 6-1430 and described in Table 6-1438.

Return to the Summary Table.

Figure 6-1430. RCSS_CSI2B_LANE4_CFG Register

31	30	29	28	27	26	25	24
RESERVED							
R/W-X							
23	22	21	20	19	18	17	16
RESERVED				dy4_wuevnt	dy4_wuen	dy4_ie	dy4_in
R/W-X				R-0h	R/W-0h	R/W-0h	R-0h
15	14	13	12	11	10	9	8
dy4_enbpd	dy4_enbpu	dx4_wuclkout	dx4_wuout	dx4_isoclkout	dx4_isoout	dx4_wuevnt	dx4_wuen
R/W-0h	R/W-1h	R-0h	R-0h	R-0h	R-0h	R-0h	R/W-0h
7	6	5	4	3	2	1	0
dx4_wuclkin	dx4_wuin	dx4_isoclkin	dx4_isoin	dx4_ie	dx4_in	dx4_enbpd	dx4_enbpu
R/W-0h	R/W-0h	R/W-0h	R/W-0h	R/W-0h	R-0h	R/W-0h	R/W-1h

Copyright © 2025 Texas Instruments Incorporated

Table 6-1438. RCSS_CSI2B_LANE4_CFG Register Field Descriptions

Bit	Field	Type	Reset	Description
31-20	RESERVED	R/W	X	
19	dy4_wuevnt	R	0h	Pad DY Wake up Event
18	dy4_wuen	R/W	0h	Pad DY Wake up Enable
17	dy4_ie	R/W	0h	Pad DY Input Buffer Enable
16	dy4_in	R	0h	Pad DY Input
15	dy4_enbpd	R/W	0h	Pad DY Enable Pull Down
14	dy4_enbpu	R/W	1h	Pad DY Enable Pull Up
13	dx4_wuclkout	R	0h	Pad DX Wake up Clkout
12	dx4_wuout	R	0h	Pad DX Wake up Output
11	dx4_isoclkout	R	0h	Pad DX Isolation Clkout
10	dx4_isoout	R	0h	Pad DX Isolation Output
9	dx4_wuevnt	R	0h	Pad DX Wake up Event
8	dx4_wuen	R/W	0h	Pad DX Wake up Enable
7	dx4_wuclkin	R/W	0h	Pad DX Wake up Clkin
6	dx4_wuin	R/W	0h	Pad DX Wake up Input
5	dx4_isoclkin	R/W	0h	Pad DX Isolation Clkin
4	dx4_isoin	R/W	0h	Pad DX Isolation Input
3	dx4_ie	R/W	0h	Pad DX Input Buffer Enable
2	dx4_in	R	0h	Pad DX Input
1	dx4_enbpd	R/W	0h	Pad DX Enable Pull Down
0	dx4_enbpu	R/W	1h	Pad DX Enable Pull Up

6.2.8.58 RCSS_CSI2A_FIFO_MEMINIT Register (Offset = E8h) [reset = X]

RCSS_CSI2A_FIFO_MEMINIT is shown in Figure 6-1431 and described in Table 6-1439.

Return to the Summary Table.

Figure 6-1431. RCSS_CSI2A_FIFO_MEMINIT Register

31	30	29	28	27	26	25	24
RESERVED							
R/W-X							
23	22	21	20	19	18	17	16
RESERVED							
R/W-X							
15	14	13	12	11	10	9	8
RESERVED							
R/W-X							
7	6	5	4	3	2	1	0
RESERVED							start
R/W-X							R/W-0h

Table 6-1439. RCSS_CSI2A_FIFO_MEMINIT Register Field Descriptions

Bit	Field	Type	Reset	Description
31-1	RESERVED	R/W	X	

Copyright © 2025 Texas Instruments Incorporated

Table 6-1439. RCSS_CSI2A_FIFO_MEMINIT Register Field Descriptions (continued)

Bit	Field	Type	Reset	Description
0	start	R/W	0h	Write pulse bit field: Start Memory initialization of memory. Write 0x1 to start memory initialization. Write 0x0 after ensuring Memory initialization is in progress or has completed.

6.2.8.59 RCSS_CSI2A_FIFO_MEMINIT_DONE Register (Offset = ECh) [reset = X]

RCSS_CSI2A_FIFO_MEMINIT_DONE is shown in Figure 6-1432 and described in Table 6-1440.

Return to the Summary Table.

Figure 6-1432. RCSS_CSI2A_FIFO_MEMINIT_DONE Register

31	30	29	28	27	26	25	24
RESERVED							
R/W-X							
23	22	21	20	19	18	17	16
RESERVED							
R/W-X							
15	14	13	12	11	10	9	8
RESERVED							
R/W-X							
7	6	5	4	3	2	1	0
RESERVED							done
R/W-X							R/W-0h

Table 6-1440. RCSS_CSI2A_FIFO_MEMINIT_DONE Register Field Descriptions

Bit	Field	Type	Reset	Description
31-1	RESERVED	R/W	X	
0	done	R/W	0h	Status field. Read value 0x1 indicates previously triggered Memory initialization of memory is complete. Write 0x1 to clear status.

6.2.8.60 RCSS_CSI2A_FIFO_MEMINIT_STATUS Register (Offset = F0h) [reset = X]

RCSS_CSI2A_FIFO_MEMINIT_STATUS is shown in Figure 6-1433 and described in Table 6-1441.

Return to the Summary Table.

Figure 6-1433. RCSS_CSI2A_FIFO_MEMINIT_STATUS Register

31	30	29	28	27	26	25	24
RESERVED							
R-X							
23	22	21	20	19	18	17	16
RESERVED							
R-X							
15	14	13	12	11	10	9	8
RESERVED							
R-X							
7	6	5	4	3	2	1	0

Copyright © 2025 Texas Instruments Incorporated

Figure 6-1433. RCSS_CSI2A_FIFO_MEMINIT_STATUS Register (continued)

RESERVED	status
R-X	R-0h

Table 6-1441. RCSS_CSI2A_FIFO_MEMINIT_STATUS Register Field Descriptions

Bit	Field	Type	Reset	Description
31-1	RESERVED	R	X	
0	status	R	0h	Status field. Read value 0x1 indicates previously triggered Memory initialization of memory is in progress.

6.2.8.61 RCSS_CSI2A_CTX_MEMINIT Register (Offset = F4h) [reset = X]

RCSS_CSI2A_CTX_MEMINIT is shown in Figure 6-1434 and described in Table 6-1442.

Return to the Summary Table.

Figure 6-1434. RCSS_CSI2A_CTX_MEMINIT Register

31	30	29	28	27	26	25	24
RESERVED							
R/W-X							
23	22	21	20	19	18	17	16
RESERVED							
R/W-X							
15	14	13	12	11	10	9	8
RESERVED							
R/W-X							
7	6	5	4	3	2	1	0
RESERVED							start
R/W-X							R/W-0h

Table 6-1442. RCSS_CSI2A_CTX_MEMINIT Register Field Descriptions

Bit	Field	Type	Reset	Description
31-1	RESERVED	R/W	X	
0	start	R/W	0h	Write pulse bit field: Start Memory initialization of memory. Write 0x1 to start memory initialization. Write 0x0 after ensuring Memory initialization is in progress or has completed.

6.2.8.62 RCSS_CSI2A_CTX_MEMINIT_DONE Register (Offset = F8h) [reset = X]

RCSS_CSI2A_CTX_MEMINIT_DONE is shown in Figure 6-1435 and described in Table 6-1443.

Return to the Summary Table.

Figure 6-1435. RCSS_CSI2A_CTX_MEMINIT_DONE Register

31	30	29	28	27	26	25	24
RESERVED							
R/W-X							
23	22	21	20	19	18	17	16
RESERVED							
R/W-X							

Copyright © 2025 Texas Instruments Incorporated

Figure 6-1435. RCSS_CSI2A_CTX_MEMINIT_DONE Register (continued)

15	14	13	12	11	10	9	8
RESERVED							
R/W-X							
7	6	5	4	3	2	1	0
RESERVED							done
R/W-X							R/W-0h

Table 6-1443. RCSS_CSI2A_CTX_MEMINIT_DONE Register Field Descriptions

Bit	Field	Type	Reset	Description
31-1	RESERVED	R/W	X	
0	done	R/W	0h	Status field. Read value 0x1 indicates previously triggered Memory initialization of memory is complete. Write 0x1 to clear status.

6.2.8.63 RCSS_CSI2A_CTX_MEMINIT_STATUS Register (Offset = FCh) [reset = X]

RCSS_CSI2A_CTX_MEMINIT_STATUS is shown in Figure 6-1436 and described in Table 6-1444.

Return to the Summary Table.

Figure 6-1436. RCSS_CSI2A_CTX_MEMINIT_STATUS Register

31	30	29	28	27	26	25	24
RESERVED							
R-X							
23	22	21	20	19	18	17	16
RESERVED							
R-X							
15	14	13	12	11	10	9	8
RESERVED							
R-X							
7	6	5	4	3	2	1	0
RESERVED							status
R-X							R-0h

Table 6-1444. RCSS_CSI2A_CTX_MEMINIT_STATUS Register Field Descriptions

Bit	Field	Type	Reset	Description
31-1	RESERVED	R	X	
0	status	R	0h	Status field. Read value 0x1 indicates previously triggered Memory initialization of memory is in progress.

6.2.8.64 RCSS_CSI2B_FIFO_MEMINIT Register (Offset = 100h) [reset = X]

RCSS_CSI2B_FIFO_MEMINIT is shown in Figure 6-1437 and described in Table 6-1445.

Return to the Summary Table.

Figure 6-1437. RCSS_CSI2B_FIFO_MEMINIT Register

31	30	29	28	27	26	25	24
RESERVED							
R/W-X							

Copyright © 2025 Texas Instruments Incorporated

Figure 6-1437. RCSS_CSI2B_FIFO_MEMINIT Register (continued)

23	22	21	20	19	18	17	16
RESERVED							
R/W-X							
15	14	13	12	11	10	9	8
RESERVED							
R/W-X							
7	6	5	4	3	2	1	0
RESERVED							start
R/W-X							R/W-0h

Table 6-1445. RCSS_CSI2B_FIFO_MEMINIT Register Field Descriptions

Bit	Field	Type	Reset	Description
31-1	RESERVED	R/W	X	
0	start	R/W	0h	Write pulse bit field: Start Memory initialization of memory. Write 0x1 to start memory initialization. Write 0x0 after ensuring Memory initialization is in progress or has completed.

6.2.8.65 RCSS_CSI2B_FIFO_MEMINIT_DONE Register (Offset = 104h) [reset = X]

RCSS_CSI2B_FIFO_MEMINIT_DONE is shown in Figure 6-1438 and described in Table 6-1446.

Return to the Summary Table.

Figure 6-1438. RCSS_CSI2B_FIFO_MEMINIT_DONE Register

31	30	29	28	27	26	25	24
RESERVED							
R/W-X							
23	22	21	20	19	18	17	16
RESERVED							
R/W-X							
15	14	13	12	11	10	9	8
RESERVED							
R/W-X							
7	6	5	4	3	2	1	0
RESERVED							done
R/W-X							R/W-0h

Table 6-1446. RCSS_CSI2B_FIFO_MEMINIT_DONE Register Field Descriptions

Bit	Field	Type	Reset	Description
31-1	RESERVED	R/W	X	
0	done	R/W	0h	Status field. Read value 0x1 indicates previously triggered Memory initialization of memory is complete. Write 0x1 to clear status.

6.2.8.66 RCSS_CSI2B_FIFO_MEMINIT_STATUS Register (Offset = 108h) [reset = X]

RCSS_CSI2B_FIFO_MEMINIT_STATUS is shown in Figure 6-1439 and described in Table 6-1447.

Return to the Summary Table.

Copyright © 2025 Texas Instruments Incorporated

Figure 6-1439. RCSS_CSI2B_FIFO_MEMINIT_STATUS Register

31	30	29	28	27	26	25	24
RESERVED							
R-X							
23	22	21	20	19	18	17	16
RESERVED							
R-X							
15	14	13	12	11	10	9	8
RESERVED							
R-X							
7	6	5	4	3	2	1	0
RESERVED							status
R-X							R-0h

Table 6-1447. RCSS_CSI2B_FIFO_MEMINIT_STATUS Register Field Descriptions

Bit	Field	Type	Reset	Description
31-1	RESERVED	R	X	
0	status	R	0h	Status field. Read value 0x1 indicates previously triggered Memory initialization of memory is in progress.

6.2.8.67 RCSS_CSI2B_CTX_MEMINIT Register (Offset = 10Ch) [reset = X]

RCSS_CSI2B_CTX_MEMINIT is shown in Figure 6-1440 and described in Table 6-1448.

Return to the Summary Table.

Figure 6-1440. RCSS_CSI2B_CTX_MEMINIT Register

31	30	29	28	27	26	25	24
RESERVED							
R/W-X							
23	22	21	20	19	18	17	16
RESERVED							
R/W-X							
15	14	13	12	11	10	9	8
RESERVED							
R/W-X							
7	6	5	4	3	2	1	0
RESERVED							start
R/W-X							R/W-0h

Table 6-1448. RCSS_CSI2B_CTX_MEMINIT Register Field Descriptions

Bit	Field	Type	Reset	Description
31-1	RESERVED	R/W	X	
0	start	R/W	0h	Write pulse bit field: Start Memory initialization of memory. Write 0x1 to start memory initialization. Write 0x0 after ensuring Memory initialization is in progress or has completed.

Copyright © 2025 Texas Instruments Incorporated

6.2.8.68 RCSS_CSI2B_CTX_MEMINIT_DONE Register (Offset = 110h) [reset = X]

RCSS_CSI2B_CTX_MEMINIT_DONE is shown in Figure 6-1441 and described in Table 6-1449.

Return to the Summary Table.

Figure 6-1441. RCSS_CSI2B_CTX_MEMINIT_DONE Register

31	30	29	28	27	26	25	24
RESERVED							
R/W-X							
23	22	21	20	19	18	17	16
RESERVED							
R/W-X							
15	14	13	12	11	10	9	8
RESERVED							
R/W-X							
7	6	5	4	3	2	1	0
RESERVED							done
R/W-X							R/W-0h

Table 6-1449. RCSS_CSI2B_CTX_MEMINIT_DONE Register Field Descriptions

Bit	Field	Type	Reset	Description
31-1	RESERVED	R/W	X	
0	done	R/W	0h	Status field. Read value 0x1 indicates previously triggered Memory initialization of memory is complete. Write 0x1 to clear status.

6.2.8.69 RCSS_CSI2B_CTX_MEMINIT_STATUS Register (Offset = 114h) [reset = X]

RCSS_CSI2B_CTX_MEMINIT_STATUS is shown in Figure 6-1442 and described in Table 6-1450.

Return to the Summary Table.

Figure 6-1442. RCSS_CSI2B_CTX_MEMINIT_STATUS Register

31	30	29	28	27	26	25	24
RESERVED							
R-X							
23	22	21	20	19	18	17	16
RESERVED							
R-X							
15	14	13	12	11	10	9	8
RESERVED							
R-X							
7	6	5	4	3	2	1	0
RESERVED							status
R-X							R-0h

Table 6-1450. RCSS_CSI2B_CTX_MEMINIT_STATUS Register Field Descriptions

Bit	Field	Type	Reset	Description
31-1	RESERVED	R	X	

Copyright © 2025 Texas Instruments Incorporated

Table 6-1450. RCSS_CSI2B_CTX_MEMINIT_STATUS Register Field Descriptions (continued)

Bit	Field	Type	Reset	Description
0	status	R	0h	Status field. Read value 0x1 indicates previously triggered Memory initialization of memory is in progress.

6.2.8.70 RCSS_BUS_SAFETY_CTRL Register (Offset = 118h) [reset = X]

RCSS_BUS_SAFETY_CTRL is shown in Figure 6-1443 and described in Table 6-1451.

Return to the Summary Table.

Figure 6-1443. RCSS_BUS_SAFETY_CTRL Register

31	30	29	28	27	26	25	24
RESERVED							
R/W-X							
23	22	21	20	19	18	17	16
RESERVED							
R/W-X							
15	14	13	12	11	10	9	8
RESERVED							
R/W-X							
7	6	5	4	3	2	1	0
RESERVED	clk_disable			RESERVED	enable		
R/W-X	R/W-0h			R/W-X	R/W-0h		

Table 6-1451. RCSS_BUS_SAFETY_CTRL Register Field Descriptions

Bit	Field	Type	Reset	Description
31-7	RESERVED	R/W	X	
6-4	clk_disable	R/W	0h	Option to clock gate the safety infrastructure is Safety is disabled
3	RESERVED	R/W	X	
2-0	enable	R/W	0h	

6.2.8.71 RCSS_BUS_SAFETY_SEC_ERR_STAT0 Register (Offset = 11Ch) [reset = X]

RCSS_BUS_SAFETY_SEC_ERR_STAT0 is shown in Figure 6-1444 and described in Table 6-1452.

Return to the Summary Table.

Figure 6-1444. RCSS_BUS_SAFETY_SEC_ERR_STAT0 Register

31	30	29	28	27	26	25	24
RESERVED							
R-X							
23	22	21	20	19	18	17	16
RESERVED							
R-X							
15	14	13	12	11	10	9	8
RESERVED						RCSS_TPTC_A1_WR	RCSS_TPTC_A0_WR
R-X						R-0h	R-0h

Copyright © 2025 Texas Instruments Incorporated

Figure 6-1444. RCSS_BUS_SAFETY_SEC_ERR_STAT0 Register (continued)

7	6	5	4	3	2	1	0
RCSS_TPTC_A1_RD	RCSS_TPTC_A0_RD	RCSS_MCASPC	RCSS_MCASPB	RCSS_MCASPA	RCSS_PCR	RCSS_CSI2B_MDMA	RCSS_CSI2A_MDMA
R-0h	R-0h	R-0h	R-0h	R-0h	R-0h	R-0h	R-0h

Table 6-1452. RCSS_BUS_SAFETY_SEC_ERR_STAT0 Register Field Descriptions

Bit	Field	Type	Reset	Description
31-10	RESERVED	R	X	
9	RCSS_TPTC_A1_WR	R	0h	
8	RCSS_TPTC_A0_WR	R	0h	
7	RCSS_TPTC_A1_RD	R	0h	
6	RCSS_TPTC_A0_RD	R	0h	
5	RCSS_MCASPC	R	0h	
4	RCSS_MCASPB	R	0h	
3	RCSS_MCASPA	R	0h	
2	RCSS_PCR	R	0h	
1	RCSS_CSI2B_MDMA	R	0h	
0	RCSS_CSI2A_MDMA	R	0h	

6.2.8.72 RCSS_TPTCA0_RD_BUS_SAFETY_CTRL Register (Offset = 120h) [reset = X]

RCSS_TPTCA0_RD_BUS_SAFETY_CTRL is shown in Figure 6-1445 and described in Table 6-1453.

Return to the Summary Table.

Figure 6-1445. RCSS_TPTCA0_RD_BUS_SAFETY_CTRL Register

31	30	29	28	27	26	25	24
RESERVED							
R/W-X							
23	22	21	20	19	18	17	16
type							
R-9h							
15	14	13	12	11	10	9	8
RESERVED							err_clear
R/W-X							R/W-0h
7	6	5	4	3	2	1	0
RESERVED					enable		
R/W-X					R/W-7h		

Table 6-1453. RCSS_TPTCA0_RD_BUS_SAFETY_CTRL Register Field Descriptions

Bit	Field	Type	Reset	Description
31-24	RESERVED	R/W	X	
23-16	type	R	9h	
15-9	RESERVED	R/W	X	
8	err_clear	R/W	0h	
7-3	RESERVED	R/W	X	
2-0	enable	R/W	7h	

Copyright © 2025 Texas Instruments Incorporated

6.2.8.73 RCSS_TPTCA0_RD_BUS_SAFETY_FI Register (Offset = 124h) [reset = X]

RCSS_TPTCA0_RD_BUS_SAFETY_FI is shown in Figure 6-1446 and described in Table 6-1454.

Return to the Summary Table.

Figure 6-1446. RCSS_TPTCA0_RD_BUS_SAFETY_FI Register

31	30	29	28	27	26	25	24
safe							
R/W-0h							
23	22	21	20	19	18	17	16
main							
R/W-0h							
15	14	13	12	11	10	9	8
data							
R/W-0h							
7	6	5	4	3	2	1	0
RESERVED		ded	sec	global_safe_req	global_main_req	global_safe	global_main
R/W-X		R/W-0h	R/W-0h	R/W-0h	R/W-0h	R/W-0h	R/W-0h

Table 6-1454. RCSS_TPTCA0_RD_BUS_SAFETY_FI Register Field Descriptions

Bit	Field	Type	Reset	Description
31-24	safe	R/W	0h	
23-16	main	R/W	0h	
15-8	data	R/W	0h	
7-6	RESERVED	R/W	X	
5	ded	R/W	0h	
4	sec	R/W	0h	
3	global_safe_req	R/W	0h	
2	global_main_req	R/W	0h	
1	global_safe	R/W	0h	
0	global_main	R/W	0h	

6.2.8.74 RCSS_TPTCA0_RD_BUS_SAFETY_ERR Register (Offset = 128h) [reset = 0h]

RCSS_TPTCA0_RD_BUS_SAFETY_ERR is shown in Figure 6-1447 and described in Table 6-1455.

Return to the Summary Table.

Figure 6-1447. RCSS_TPTCA0_RD_BUS_SAFETY_ERR Register

31	30	29	28	27	26	25	24	23	22	21	20	19	18	17	16
ded								sec							
R-0h								R-0h							
15	14	13	12	11	10	9	8	7	6	5	4	3	2	1	0
comp_check								comp_err							
R-0h								R-0h							

Copyright © 2025 Texas Instruments Incorporated

Table 6-1455. RCSS_TPTCA0_RD_BUS_SAFETY_ERR Register Field Descriptions

Bit	Field	Type	Reset	Description
31-24	ded	R	0h	
23-16	sec	R	0h	
15-8	comp_check	R	0h	
7-0	comp_err	R	0h	

6.2.8.75 RCSS_TPTCA0_RD_BUS_SAFETY_ERR_STAT_DATA0 Register (Offset = 12Ch) [reset = X]

RCSS_TPTCA0_RD_BUS_SAFETY_ERR_STAT_DATA0 is shown in Figure 6-1448 and described in Table 6-1456.

Return to the Summary Table.

Figure 6-1448. RCSS_TPTCA0_RD_BUS_SAFETY_ERR_STAT_DATA0 Register

31	30	29	28	27	26	25	24	23	22	21	20	19	18	17	16	15	14	13	12	11	10	9	8	7	6	5	4	3	2	1	0
RESERVED																d1								d0							
R-X																R-0h								R-0h							

Table 6-1456. RCSS_TPTCA0_RD_BUS_SAFETY_ERR_STAT_DATA0 Register Field Descriptions

Bit	Field	Type	Reset	Description
31-16	RESERVED	R	X	
15-8	d1	R	0h	
7-0	d0	R	0h	

6.2.8.76 RCSS_TPTCA0_RD_BUS_SAFETY_ERR_STAT_CMD Register (Offset = 130h) [reset = 0h]

RCSS_TPTCA0_RD_BUS_SAFETY_ERR_STAT_CMD is shown in Figure 6-1449 and described in Table 6-1457.

Return to the Summary Table.

Figure 6-1449. RCSS_TPTCA0_RD_BUS_SAFETY_ERR_STAT_CMD Register

31	30	29	28	27	26	25	24	23	22	21	20	19	18	17	16	15	14	13	12	11	10	9	8	7	6	5	4	3	2	1	0
stat																															
R-0h																															

Table 6-1457. RCSS_TPTCA0_RD_BUS_SAFETY_ERR_STAT_CMD Register Field Descriptions

Bit	Field	Type	Reset	Description
31-0	stat	R	0h	

6.2.8.77 RCSS_TPTCA0_RD_BUS_SAFETY_ERR_STAT_READ Register (Offset = 134h) [reset = 0h]

RCSS_TPTCA0_RD_BUS_SAFETY_ERR_STAT_READ is shown in Figure 6-1450 and described in Table 6-1458.

Return to the Summary Table.

Figure 6-1450. RCSS_TPTCA0_RD_BUS_SAFETY_ERR_STAT_READ Register

31	30	29	28	27	26	25	24	23	22	21	20	19	18	17	16	15	14	13	12	11	10	9	8	7	6	5	4	3	2	1	0
stat																															
R-0h																															

Copyright © 2025 Texas Instruments Incorporated

Figure 6-1450. RCSS_TPTCA0_RD_BUS_SAFETY_ERR_STAT_READ Register (continued)

Table 6-1458. RCSS_TPTCA0_RD_BUS_SAFETY_ERR_STAT_READ Register Field Descriptions

Bit	Field	Type	Reset	Description
31-0	stat	R	0h	

6.2.8.78 RCSS_TPTCA1_RD_BUS_SAFETY_CTRL Register (Offset = 138h) [reset = X]

RCSS_TPTCA1_RD_BUS_SAFETY_CTRL is shown in Figure 6-1451 and described in Table 6-1459.

Return to the Summary Table.

Figure 6-1451. RCSS_TPTCA1_RD_BUS_SAFETY_CTRL Register

31	30	29	28	27	26	25	24
RESERVED							
R/W-X							
23	22	21	20	19	18	17	16
type							
R-9h							
15	14	13	12	11	10	9	8
RESERVED							err_clear
R/W-X							R/W-0h
7	6	5	4	3	2	1	0
RESERVED						enable	
R/W-X						R/W-7h	

Table 6-1459. RCSS_TPTCA1_RD_BUS_SAFETY_CTRL Register Field Descriptions

Bit	Field	Type	Reset	Description
31-24	RESERVED	R/W	X	
23-16	type	R	9h	
15-9	RESERVED	R/W	X	
8	err_clear	R/W	0h	
7-3	RESERVED	R/W	X	
2-0	enable	R/W	7h	

6.2.8.79 RCSS_TPTCA1_RD_BUS_SAFETY_FI Register (Offset = 13Ch) [reset = X]

RCSS_TPTCA1_RD_BUS_SAFETY_FI is shown in Figure 6-1452 and described in Table 6-1460.

Return to the Summary Table.

Figure 6-1452. RCSS_TPTCA1_RD_BUS_SAFETY_FI Register

31	30	29	28	27	26	25	24
safe							
R/W-0h							
23	22	21	20	19	18	17	16
main							
R/W-0h							
15	14	13	12	11	10	9	8

Copyright © 2025 Texas Instruments Incorporated

Figure 6-1452. RCSS_TPTCA1_RD_BUS_SAFETY_FI Register (continued)

data							
R/W-0h							
7	6	5	4	3	2	1	0
RESERVED		ded	sec	global_safe_req	global_main_req	global_safe	global_main
R/W-X		R/W-0h	R/W-0h	R/W-0h	R/W-0h	R/W-0h	R/W-0h

Table 6-1460. RCSS_TPTCA1_RD_BUS_SAFETY_FI Register Field Descriptions

Bit	Field	Type	Reset	Description
31-24	safe	R/W	0h	
23-16	main	R/W	0h	
15-8	data	R/W	0h	
7-6	RESERVED	R/W	X	
5	ded	R/W	0h	
4	sec	R/W	0h	
3	global_safe_req	R/W	0h	
2	global_main_req	R/W	0h	
1	global_safe	R/W	0h	
0	global_main	R/W	0h	

6.2.8.80 RCSS_TPTCA1_RD_BUS_SAFETY_ERR Register (Offset = 140h) [reset = 0h]

RCSS_TPTCA1_RD_BUS_SAFETY_ERR is shown in Figure 6-1453 and described in Table 6-1461.

Return to the Summary Table.

Figure 6-1453. RCSS_TPTCA1_RD_BUS_SAFETY_ERR Register

31	30	29	28	27	26	25	24	23	22	21	20	19	18	17	16
ded								sec							
R-0h								R-0h							
15	14	13	12	11	10	9	8	7	6	5	4	3	2	1	0
comp_check								comp_err							
R-0h								R-0h							

Table 6-1461. RCSS_TPTCA1_RD_BUS_SAFETY_ERR Register Field Descriptions

Bit	Field	Type	Reset	Description
31-24	ded	R	0h	
23-16	sec	R	0h	
15-8	comp_check	R	0h	
7-0	comp_err	R	0h	

6.2.8.81 RCSS_TPTCA1_RD_BUS_SAFETY_ERR_STAT_DATA0 Register (Offset = 144h) [reset = X]

RCSS_TPTCA1_RD_BUS_SAFETY_ERR_STAT_DATA0 is shown in Figure 6-1454 and described in Table 6-1462.

Return to the Summary Table.

Copyright © 2025 Texas Instruments Incorporated

Figure 6-1454. RCSS_TPTCA1_RD_BUS_SAFETY_ERR_STAT_DATA0 Register

31	30	29	28	27	26	25	24	23	22	21	20	19	18	17	16	15	14	13	12	11	10	9	8	7	6	5	4	3	2	1	0
RESERVED																d1								d0							
R-X																R-0h								R-0h							

Table 6-1462. RCSS_TPTCA1_RD_BUS_SAFETY_ERR_STAT_DATA0 Register Field Descriptions

Bit	Field	Type	Reset	Description
31-16	RESERVED	R	X	
15-8	d1	R	0h	
7-0	d0	R	0h	

6.2.8.82 RCSS_TPTCA1_RD_BUS_SAFETY_ERR_STAT_CMD Register (Offset = 148h) [reset = 0h]

RCSS_TPTCA1_RD_BUS_SAFETY_ERR_STAT_CMD is shown in Figure 6-1455 and described in Table 6-1463.

Return to the Summary Table.

Figure 6-1455. RCSS_TPTCA1_RD_BUS_SAFETY_ERR_STAT_CMD Register

31	30	29	28	27	26	25	24	23	22	21	20	19	18	17	16	15	14	13	12	11	10	9	8	7	6	5	4	3	2	1	0
stat																															
R-0h																															

Table 6-1463. RCSS_TPTCA1_RD_BUS_SAFETY_ERR_STAT_CMD Register Field Descriptions

Bit	Field	Type	Reset	Description
31-0	stat	R	0h	

6.2.8.83 RCSS_TPTCA1_RD_BUS_SAFETY_ERR_STAT_READ Register (Offset = 14Ch) [reset = 0h]

RCSS_TPTCA1_RD_BUS_SAFETY_ERR_STAT_READ is shown in Figure 6-1456 and described in Table 6-1464.

Return to the Summary Table.

Figure 6-1456. RCSS_TPTCA1_RD_BUS_SAFETY_ERR_STAT_READ Register

31	30	29	28	27	26	25	24	23	22	21	20	19	18	17	16	15	14	13	12	11	10	9	8	7	6	5	4	3	2	1	0
stat																															
R-0h																															

Table 6-1464. RCSS_TPTCA1_RD_BUS_SAFETY_ERR_STAT_READ Register Field Descriptions

Bit	Field	Type	Reset	Description
31-0	stat	R	0h	

6.2.8.84 RCSS_TPTCA0_WR_BUS_SAFETY_CTRL Register (Offset = 150h) [reset = X]

RCSS_TPTCA0_WR_BUS_SAFETY_CTRL is shown in Figure 6-1457 and described in Table 6-1465.

Return to the Summary Table.

Figure 6-1457. RCSS_TPTCA0_WR_BUS_SAFETY_CTRL Register

31	30	29	28	27	26	25	24
RESERVED							

Copyright © 2025 Texas Instruments Incorporated

Figure 6-1457. RCSS_TPTCA0_WR_BUS_SAFETY_CTRL Register (continued)

R/W-X							
23	22	21	20	19	18	17	16
type							
R-7h							
15	14	13	12	11	10	9	8
RESERVED							err_clear
R/W-X							R/W-0h
7	6	5	4	3	2	1	0
RESERVED						enable	
R/W-X						R/W-7h	

Table 6-1465. RCSS_TPTCA0_WR_BUS_SAFETY_CTRL Register Field Descriptions

Bit	Field	Type	Reset	Description
31-24	RESERVED	R/W	X	
23-16	type	R	7h	
15-9	RESERVED	R/W	X	
8	err_clear	R/W	0h	
7-3	RESERVED	R/W	X	
2-0	enable	R/W	7h	

6.2.8.85 RCSS_TPTCA0_WR_BUS_SAFETY_FI Register (Offset = 154h) [reset = X]

RCSS_TPTCA0_WR_BUS_SAFETY_FI is shown in Figure 6-1458 and described in Table 6-1466.

Return to the Summary Table.

Figure 6-1458. RCSS_TPTCA0_WR_BUS_SAFETY_FI Register

31	30	29	28	27	26	25	24
safe							
R/W-0h							
23	22	21	20	19	18	17	16
main							
R/W-0h							
15	14	13	12	11	10	9	8
data							
R/W-0h							
7	6	5	4	3	2	1	0
RESERVED		ded	sec	global_safe_req	global_main_req	global_safe	global_main
R/W-X		R/W-0h	R/W-0h	R/W-0h	R/W-0h	R/W-0h	R/W-0h

Table 6-1466. RCSS_TPTCA0_WR_BUS_SAFETY_FI Register Field Descriptions

Bit	Field	Type	Reset	Description
31-24	safe	R/W	0h	
23-16	main	R/W	0h	
15-8	data	R/W	0h	

Copyright © 2025 Texas Instruments Incorporated

Table 6-1466. RCSS_TPTCA0_WR_BUS_SAFETY_FI Register Field Descriptions (continued)

Bit	Field	Type	Reset	Description
7-6	RESERVED	R/W	X	
5	ded	R/W	0h	
4	sec	R/W	0h	
3	global_safe_req	R/W	0h	
2	global_main_req	R/W	0h	
1	global_safe	R/W	0h	
0	global_main	R/W	0h	

6.2.8.86 RCSS_TPTCA0_WR_BUS_SAFETY_ERR Register (Offset = 158h) [reset = 0h]

RCSS_TPTCA0_WR_BUS_SAFETY_ERR is shown in Figure 6-1459 and described in Table 6-1467.

Return to the Summary Table.

Figure 6-1459. RCSS_TPTCA0_WR_BUS_SAFETY_ERR Register

31	30	29	28	27	26	25	24	23	22	21	20	19	18	17	16
ded								sec							
R-0h								R-0h							
15	14	13	12	11	10	9	8	7	6	5	4	3	2	1	0
comp_check								comp_err							
R-0h								R-0h							

Table 6-1467. RCSS_TPTCA0_WR_BUS_SAFETY_ERR Register Field Descriptions

Bit	Field	Type	Reset	Description
31-24	ded	R	0h	
23-16	sec	R	0h	
15-8	comp_check	R	0h	
7-0	comp_err	R	0h	

6.2.8.87 RCSS_TPTCA0_WR_BUS_SAFETY_ERR_STAT_DATA0 Register (Offset = 15Ch) [reset = X]

RCSS_TPTCA0_WR_BUS_SAFETY_ERR_STAT_DATA0 is shown in Figure 6-1460 and described in Table 6-1468.

Return to the Summary Table.

Figure 6-1460. RCSS_TPTCA0_WR_BUS_SAFETY_ERR_STAT_DATA0 Register

31	30	29	28	27	26	25	24	23	22	21	20	19	18	17	16	15	14	13	12	11	10	9	8	7	6	5	4	3	2	1	0
RESERVED																d1								d0							
R-X																R-0h								R-0h							

Table 6-1468. RCSS_TPTCA0_WR_BUS_SAFETY_ERR_STAT_DATA0 Register Field Descriptions

Bit	Field	Type	Reset	Description
31-16	RESERVED	R	X	
15-8	d1	R	0h	
7-0	d0	R	0h	

Copyright © 2025 Texas Instruments Incorporated

6.2.8.88 RCSS_TPTCA0_WR_BUS_SAFETY_ERR_STAT_CMD Register (Offset = 160h) [reset = 0h]

RCSS_TPTCA0_WR_BUS_SAFETY_ERR_STAT_CMD is shown in Figure 6-1461 and described in Table 6-1469.

Return to the Summary Table.

Figure 6-1461. RCSS_TPTCA0_WR_BUS_SAFETY_ERR_STAT_CMD Register

31	30	29	28	27	26	25	24	23	22	21	20	19	18	17	16	15	14	13	12	11	10	9	8	7	6	5	4	3	2	1	0
stat																															
R-0h																															

Table 6-1469. RCSS_TPTCA0_WR_BUS_SAFETY_ERR_STAT_CMD Register Field Descriptions

Bit	Field	Type	Reset	Description
31-0	stat	R	0h	

6.2.8.89 RCSS_TPTCA0_WR_BUS_SAFETY_ERR_STAT_WRITE Register (Offset = 164h) [reset = 0h]

RCSS_TPTCA0_WR_BUS_SAFETY_ERR_STAT_WRITE is shown in Figure 6-1462 and described in Table 6-1470.

Return to the Summary Table.

Figure 6-1462. RCSS_TPTCA0_WR_BUS_SAFETY_ERR_STAT_WRITE Register

31	30	29	28	27	26	25	24	23	22	21	20	19	18	17	16	15	14	13	12	11	10	9	8	7	6	5	4	3	2	1	0
stat																															
R-0h																															

Table 6-1470. RCSS_TPTCA0_WR_BUS_SAFETY_ERR_STAT_WRITE Register Field Descriptions

Bit	Field	Type	Reset	Description
31-0	stat	R	0h	

6.2.8.90 RCSS_TPTCA0_WR_BUS_SAFETY_ERR_STAT_WRITERESP Register (Offset = 168h) [reset = 0h]

RCSS_TPTCA0_WR_BUS_SAFETY_ERR_STAT_WRITERESP is shown in Figure 6-1463 and described in Table 6-1471.

Return to the Summary Table.

Figure 6-1463. RCSS_TPTCA0_WR_BUS_SAFETY_ERR_STAT_WRITERESP Register

31	30	29	28	27	26	25	24	23	22	21	20	19	18	17	16	15	14	13	12	11	10	9	8	7	6	5	4	3	2	1	0
stat																															
R-0h																															

Table 6-1471. RCSS_TPTCA0_WR_BUS_SAFETY_ERR_STAT_WRITERESP Register Field Descriptions

Bit	Field	Type	Reset	Description
31-0	stat	R	0h	

6.2.8.91 RCSS_TPTCA1_WR_BUS_SAFETY_CTRL Register (Offset = 16Ch) [reset = X]

RCSS_TPTCA1_WR_BUS_SAFETY_CTRL is shown in Figure 6-1464 and described in Table 6-1472.

Return to the Summary Table.

Copyright © 2025 Texas Instruments Incorporated

Figure 6-1464. RCSS_TPTCA1_WR_BUS_SAFETY_CTRL Register

31	30	29	28	27	26	25	24
RESERVED							
R/W-X							
23	22	21	20	19	18	17	16
type							
R-7h							
15	14	13	12	11	10	9	8
RESERVED							err_clear
R/W-X							R/W-0h
7	6	5	4	3	2	1	0
RESERVED						enable	
R/W-X						R/W-7h	

Table 6-1472. RCSS_TPTCA1_WR_BUS_SAFETY_CTRL Register Field Descriptions

Bit	Field	Type	Reset	Description
31-24	RESERVED	R/W	X	
23-16	type	R	7h	
15-9	RESERVED	R/W	X	
8	err_clear	R/W	0h	
7-3	RESERVED	R/W	X	
2-0	enable	R/W	7h	

6.2.8.92 RCSS_TPTCA1_WR_BUS_SAFETY_FI Register (Offset = 170h) [reset = X]

RCSS_TPTCA1_WR_BUS_SAFETY_FI is shown in Figure 6-1465 and described in Table 6-1473.

Return to the Summary Table.

Figure 6-1465. RCSS_TPTCA1_WR_BUS_SAFETY_FI Register

31	30	29	28	27	26	25	24
safe							
R/W-0h							
23	22	21	20	19	18	17	16
main							
R/W-0h							
15	14	13	12	11	10	9	8
data							
R/W-0h							
7	6	5	4	3	2	1	0
RESERVED		ded	sec	global_safe_req	global_main_req	global_safe	global_main
R/W-X		R/W-0h	R/W-0h	R/W-0h	R/W-0h	R/W-0h	R/W-0h

Table 6-1473. RCSS_TPTCA1_WR_BUS_SAFETY_FI Register Field Descriptions

Bit	Field	Type	Reset	Description
31-24	safe	R/W	0h	

Copyright © 2025 Texas Instruments Incorporated

Table 6-1473. RCSS_TPTCA1_WR_BUS_SAFETY_FI Register Field Descriptions (continued)

Bit	Field	Type	Reset	Description
23-16	main	R/W	0h	
15-8	data	R/W	0h	
7-6	RESERVED	R/W	X	
5	ded	R/W	0h	
4	sec	R/W	0h	
3	global_safe_req	R/W	0h	
2	global_main_req	R/W	0h	
1	global_safe	R/W	0h	
0	global_main	R/W	0h	

6.2.8.93 RCSS_TPTCA1_WR_BUS_SAFETY_ERR Register (Offset = 174h) [reset = 0h]

RCSS_TPTCA1_WR_BUS_SAFETY_ERR is shown in Figure 6-1466 and described in Table 6-1474.

Return to the Summary Table.

Figure 6-1466. RCSS_TPTCA1_WR_BUS_SAFETY_ERR Register

31	30	29	28	27	26	25	24	23	22	21	20	19	18	17	16
ded								sec							
R-0h								R-0h							
15	14	13	12	11	10	9	8	7	6	5	4	3	2	1	0
comp_check								comp_err							
R-0h								R-0h							

Table 6-1474. RCSS_TPTCA1_WR_BUS_SAFETY_ERR Register Field Descriptions

Bit	Field	Type	Reset	Description
31-24	ded	R	0h	
23-16	sec	R	0h	
15-8	comp_check	R	0h	
7-0	comp_err	R	0h	

6.2.8.94 RCSS_TPTCA1_WR_BUS_SAFETY_ERR_STAT_DATA0 Register (Offset = 178h) [reset = X]

RCSS_TPTCA1_WR_BUS_SAFETY_ERR_STAT_DATA0 is shown in Figure 6-1467 and described in Table 6-1475.

Return to the Summary Table.

Figure 6-1467. RCSS_TPTCA1_WR_BUS_SAFETY_ERR_STAT_DATA0 Register

31	30	29	28	27	26	25	24	23	22	21	20	19	18	17	16	15	14	13	12	11	10	9	8	7	6	5	4	3	2	1	0
RESERVED																d1								d0							
R-X																R-0h								R-0h							

Table 6-1475. RCSS_TPTCA1_WR_BUS_SAFETY_ERR_STAT_DATA0 Register Field Descriptions

Bit	Field	Type	Reset	Description
31-16	RESERVED	R	X	
15-8	d1	R	0h	
7-0	d0	R	0h	

Copyright © 2025 Texas Instruments Incorporated

6.2.8.95 RCSS_TPTCA1_WR_BUS_SAFETY_ERR_STAT_CMD Register (Offset = 17Ch) [reset = 0h]

RCSS_TPTCA1_WR_BUS_SAFETY_ERR_STAT_CMD is shown in Figure 6-1468 and described in Table 6-1476.

Return to the Summary Table.

Figure 6-1468. RCSS_TPTCA1_WR_BUS_SAFETY_ERR_STAT_CMD Register

31	30	29	28	27	26	25	24	23	22	21	20	19	18	17	16	15	14	13	12	11	10	9	8	7	6	5	4	3	2	1	0
stat																															
R-0h																															

Table 6-1476. RCSS_TPTCA1_WR_BUS_SAFETY_ERR_STAT_CMD Register Field Descriptions

Bit	Field	Type	Reset	Description
31-0	stat	R	0h	

6.2.8.96 RCSS_TPTCA1_WR_BUS_SAFETY_ERR_STAT_WRITE Register (Offset = 180h) [reset = 0h]

RCSS_TPTCA1_WR_BUS_SAFETY_ERR_STAT_WRITE is shown in Figure 6-1469 and described in Table 6-1477.

Return to the Summary Table.

Figure 6-1469. RCSS_TPTCA1_WR_BUS_SAFETY_ERR_STAT_WRITE Register

31	30	29	28	27	26	25	24	23	22	21	20	19	18	17	16	15	14	13	12	11	10	9	8	7	6	5	4	3	2	1	0
stat																															
R-0h																															

Table 6-1477. RCSS_TPTCA1_WR_BUS_SAFETY_ERR_STAT_WRITE Register Field Descriptions

Bit	Field	Type	Reset	Description
31-0	stat	R	0h	

6.2.8.97 RCSS_TPTCA1_WR_BUS_SAFETY_ERR_STAT_WRITERESP Register (Offset = 184h) [reset = 0h]

RCSS_TPTCA1_WR_BUS_SAFETY_ERR_STAT_WRITERESP is shown in Figure 6-1470 and described in Table 6-1478.

Return to the Summary Table.

Figure 6-1470. RCSS_TPTCA1_WR_BUS_SAFETY_ERR_STAT_WRITERESP Register

31	30	29	28	27	26	25	24	23	22	21	20	19	18	17	16	15	14	13	12	11	10	9	8	7	6	5	4	3	2	1	0
stat																															
R-0h																															

Table 6-1478. RCSS_TPTCA1_WR_BUS_SAFETY_ERR_STAT_WRITERESP Register Field Descriptions

Bit	Field	Type	Reset	Description
31-0	stat	R	0h	

6.2.8.98 RCSS_CSI2A_MDMA_BUS_SAFETY_CTRL Register (Offset = 188h) [reset = X]

RCSS_CSI2A_MDMA_BUS_SAFETY_CTRL is shown in Figure 6-1471 and described in Table 6-1479.

Return to the Summary Table.

Copyright © 2025 Texas Instruments Incorporated

Figure 6-1471. RCSS_CSI2A_MDMA_BUS_SAFETY_CTRL Register

31	30	29	28	27	26	25	24
RESERVED							
R/W-X							
23	22	21	20	19	18	17	16
type							
R-Fh							
15	14	13	12	11	10	9	8
RESERVED							err_clear
R/W-X							R/W-0h
7	6	5	4	3	2	1	0
RESERVED						enable	
R/W-X						R/W-7h	

Table 6-1479. RCSS_CSI2A_MDMA_BUS_SAFETY_CTRL Register Field Descriptions

Bit	Field	Type	Reset	Description
31-24	RESERVED	R/W	X	
23-16	type	R	Fh	
15-9	RESERVED	R/W	X	
8	err_clear	R/W	0h	
7-3	RESERVED	R/W	X	
2-0	enable	R/W	7h	

6.2.8.99 RCSS_CSI2A_MDMA_BUS_SAFETY_FI Register (Offset = 18Ch) [reset = X]

RCSS_CSI2A_MDMA_BUS_SAFETY_FI is shown in Figure 6-1472 and described in Table 6-1480.

Return to the Summary Table.

Figure 6-1472. RCSS_CSI2A_MDMA_BUS_SAFETY_FI Register

31	30	29	28	27	26	25	24
safe							
R/W-0h							
23	22	21	20	19	18	17	16
main							
R/W-0h							
15	14	13	12	11	10	9	8
data							
R/W-0h							
7	6	5	4	3	2	1	0
RESERVED		ded	sec	global_safe_req	global_main_req	global_safe	global_main
R/W-X		R/W-0h	R/W-0h	R/W-0h	R/W-0h	R/W-0h	R/W-0h

Table 6-1480. RCSS_CSI2A_MDMA_BUS_SAFETY_FI Register Field Descriptions

Bit	Field	Type	Reset	Description
31-24	safe	R/W	0h	

Copyright © 2025 Texas Instruments Incorporated

Table 6-1480. RCSS_CSI2A_MDMA_BUS_SAFETY_FI Register Field Descriptions (continued)

Bit	Field	Type	Reset	Description
23-16	main	R/W	0h	
15-8	data	R/W	0h	
7-6	RESERVED	R/W	X	
5	ded	R/W	0h	
4	sec	R/W	0h	
3	global_safe_req	R/W	0h	
2	global_main_req	R/W	0h	
1	global_safe	R/W	0h	
0	global_main	R/W	0h	

6.2.8.100 RCSS_CSI2A_MDMA_BUS_SAFETY_ERR Register (Offset = 190h) [reset = 0h]

RCSS_CSI2A_MDMA_BUS_SAFETY_ERR is shown in Figure 6-1473 and described in Table 6-1481.

Return to the Summary Table.

Figure 6-1473. RCSS_CSI2A_MDMA_BUS_SAFETY_ERR Register

31	30	29	28	27	26	25	24	23	22	21	20	19	18	17	16
ded								sec							
R-0h								R-0h							
15	14	13	12	11	10	9	8	7	6	5	4	3	2	1	0
comp_check								comp_err							
R-0h								R-0h							

Table 6-1481. RCSS_CSI2A_MDMA_BUS_SAFETY_ERR Register Field Descriptions

Bit	Field	Type	Reset	Description
31-24	ded	R	0h	
23-16	sec	R	0h	
15-8	comp_check	R	0h	
7-0	comp_err	R	0h	

6.2.8.101 RCSS_CSI2A_MDMA_BUS_SAFETY_ERR_STAT_DATA0 Register (Offset = 194h) [reset = X]

RCSS_CSI2A_MDMA_BUS_SAFETY_ERR_STAT_DATA0 is shown in Figure 6-1474 and described in Table 6-1482.

Return to the Summary Table.

Figure 6-1474. RCSS_CSI2A_MDMA_BUS_SAFETY_ERR_STAT_DATA0 Register

31	30	29	28	27	26	25	24	23	22	21	20	19	18	17	16	15	14	13	12	11	10	9	8	7	6	5	4	3	2	1	0
RESERVED																d1								d0							
R-X																R-0h								R-0h							

Table 6-1482. RCSS_CSI2A_MDMA_BUS_SAFETY_ERR_STAT_DATA0 Register Field Descriptions

Bit	Field	Type	Reset	Description
31-16	RESERVED	R	X	
15-8	d1	R	0h	
7-0	d0	R	0h	

Copyright © 2025 Texas Instruments Incorporated

6.2.8.102 RCSS_CSI2A_MDMA_BUS_SAFETY_ERR_STAT_CMD Register (Offset = 198h) [reset = 0h]

RCSS_CSI2A_MDMA_BUS_SAFETY_ERR_STAT_CMD is shown in Figure 6-1475 and described in Table 6-1483.

Return to the Summary Table.

Figure 6-1475. RCSS_CSI2A_MDMA_BUS_SAFETY_ERR_STAT_CMD Register

31	30	29	28	27	26	25	24	23	22	21	20	19	18	17	16	15	14	13	12	11	10	9	8	7	6	5	4	3	2	1	0
stat																															
R-0h																															

Table 6-1483. RCSS_CSI2A_MDMA_BUS_SAFETY_ERR_STAT_CMD Register Field Descriptions

Bit	Field	Type	Reset	Description
31-0	stat	R	0h	

6.2.8.103 RCSS_CSI2A_MDMA_BUS_SAFETY_ERR_STAT_WRITE Register (Offset = 19Ch) [reset = 0h]

RCSS_CSI2A_MDMA_BUS_SAFETY_ERR_STAT_WRITE is shown in Figure 6-1476 and described in Table 6-1484.

Return to the Summary Table.

Figure 6-1476. RCSS_CSI2A_MDMA_BUS_SAFETY_ERR_STAT_WRITE Register

31	30	29	28	27	26	25	24	23	22	21	20	19	18	17	16	15	14	13	12	11	10	9	8	7	6	5	4	3	2	1	0
stat																															
R-0h																															

Table 6-1484. RCSS_CSI2A_MDMA_BUS_SAFETY_ERR_STAT_WRITE Register Field Descriptions

Bit	Field	Type	Reset	Description
31-0	stat	R	0h	

6.2.8.104 RCSS_CSI2A_MDMA_BUS_SAFETY_ERR_STAT_READ Register (Offset = 1A0h) [reset = 0h]

RCSS_CSI2A_MDMA_BUS_SAFETY_ERR_STAT_READ is shown in Figure 6-1477 and described in Table 6-1485.

Return to the Summary Table.

Figure 6-1477. RCSS_CSI2A_MDMA_BUS_SAFETY_ERR_STAT_READ Register

31	30	29	28	27	26	25	24	23	22	21	20	19	18	17	16	15	14	13	12	11	10	9	8	7	6	5	4	3	2	1	0
stat																															
R-0h																															

Table 6-1485. RCSS_CSI2A_MDMA_BUS_SAFETY_ERR_STAT_READ Register Field Descriptions

Bit	Field	Type	Reset	Description
31-0	stat	R	0h	

6.2.8.105 RCSS_CSI2A_MDMA_BUS_SAFETY_ERR_STAT_WRITERESP Register (Offset = 1A4h) [reset = 0h]

RCSS_CSI2A_MDMA_BUS_SAFETY_ERR_STAT_WRITERESP is shown in Figure 6-1478 and described in Table 6-1486.

Copyright © 2025 Texas Instruments Incorporated

Return to the Summary Table.

Figure 6-1478. RCSS_CSI2A_MDMA_BUS_SAFETY_ERR_STAT_WRITERESP Register

31	30	29	28	27	26	25	24	23	22	21	20	19	18	17	16	15	14	13	12	11	10	9	8	7	6	5	4	3	2	1	0
stat																															
R-0h																															

Table 6-1486. RCSS_CSI2A_MDMA_BUS_SAFETY_ERR_STAT_WRITERESP Register Field Descriptions

Bit	Field	Type	Reset	Description
31-0	stat	R	0h	

6.2.8.106 RCSS_CSI2B_MDMA_BUS_SAFETY_CTRL Register (Offset = 1A8h) [reset = X]

RCSS_CSI2B_MDMA_BUS_SAFETY_CTRL is shown in Figure 6-1479 and described in Table 6-1487.

Return to the Summary Table.

Figure 6-1479. RCSS_CSI2B_MDMA_BUS_SAFETY_CTRL Register

31	30	29	28	27	26	25	24
RESERVED							
R/W-X							
23	22	21	20	19	18	17	16
type							
R-Fh							
15	14	13	12	11	10	9	8
RESERVED							err_clear
R/W-X							R/W-0h
7	6	5	4	3	2	1	0
RESERVED						enable	
R/W-X						R/W-7h	

Table 6-1487. RCSS_CSI2B_MDMA_BUS_SAFETY_CTRL Register Field Descriptions

Bit	Field	Type	Reset	Description
31-24	RESERVED	R/W	X	
23-16	type	R	Fh	
15-9	RESERVED	R/W	X	
8	err_clear	R/W	0h	
7-3	RESERVED	R/W	X	
2-0	enable	R/W	7h	

6.2.8.107 RCSS_CSI2B_MDMA_BUS_SAFETY_FI Register (Offset = 1ACh) [reset = X]

RCSS_CSI2B_MDMA_BUS_SAFETY_FI is shown in Figure 6-1480 and described in Table 6-1488.

Return to the Summary Table.

Figure 6-1480. RCSS_CSI2B_MDMA_BUS_SAFETY_FI Register

31	30	29	28	27	26	25	24
safe							
R/W-0h							

Copyright © 2025 Texas Instruments Incorporated

Figure 6-1480. RCSS_CSI2B_MDMA_BUS_SAFETY_FI Register (continued)

23	22	21	20	19	18	17	16
main							
R/W-0h							
15	14	13	12	11	10	9	8
data							
R/W-0h							
7	6	5	4	3	2	1	0
RESERVED		ded	sec	global_safe_req	global_main_req	global_safe	global_main
R/W-X		R/W-0h	R/W-0h	R/W-0h	R/W-0h	R/W-0h	R/W-0h

Table 6-1488. RCSS_CSI2B_MDMA_BUS_SAFETY_FI Register Field Descriptions

Bit	Field	Type	Reset	Description
31-24	safe	R/W	0h	
23-16	main	R/W	0h	
15-8	data	R/W	0h	
7-6	RESERVED	R/W	X	
5	ded	R/W	0h	
4	sec	R/W	0h	
3	global_safe_req	R/W	0h	
2	global_main_req	R/W	0h	
1	global_safe	R/W	0h	
0	global_main	R/W	0h	

6.2.8.108 RCSS_CSI2B_MDMA_BUS_SAFETY_ERR Register (Offset = 1B0h) [reset = 0h]

RCSS_CSI2B_MDMA_BUS_SAFETY_ERR is shown in Figure 6-1481 and described in Table 6-1489.

Return to the Summary Table.

Figure 6-1481. RCSS_CSI2B_MDMA_BUS_SAFETY_ERR Register

31	30	29	28	27	26	25	24	23	22	21	20	19	18	17	16
ded								sec							
R-0h								R-0h							
15	14	13	12	11	10	9	8	7	6	5	4	3	2	1	0
comp_check								comp_err							
R-0h								R-0h							

Table 6-1489. RCSS_CSI2B_MDMA_BUS_SAFETY_ERR Register Field Descriptions

Bit	Field	Type	Reset	Description
31-24	ded	R	0h	
23-16	sec	R	0h	
15-8	comp_check	R	0h	
7-0	comp_err	R	0h	

Copyright © 2025 Texas Instruments Incorporated

6.2.8.109 RCSS_CSI2B_MDMA_BUS_SAFETY_ERR_STAT_DATA0 Register (Offset = 1B4h) [reset = X]

RCSS_CSI2B_MDMA_BUS_SAFETY_ERR_STAT_DATA0 is shown in Figure 6-1482 and described in Table 6-1490.

Return to the Summary Table.

Figure 6-1482. RCSS_CSI2B_MDMA_BUS_SAFETY_ERR_STAT_DATA0 Register

31	30	29	28	27	26	25	24	23	22	21	20	19	18	17	16	15	14	13	12	11	10	9	8	7	6	5	4	3	2	1	0
RESERVED																d1								d0							
R-X																R-0h								R-0h							

Table 6-1490. RCSS_CSI2B_MDMA_BUS_SAFETY_ERR_STAT_DATA0 Register Field Descriptions

Bit	Field	Type	Reset	Description
31-16	RESERVED	R	X	
15-8	d1	R	0h	
7-0	d0	R	0h	

6.2.8.110 RCSS_CSI2B_MDMA_BUS_SAFETY_ERR_STAT_CMD Register (Offset = 1B8h) [reset = 0h]

RCSS_CSI2B_MDMA_BUS_SAFETY_ERR_STAT_CMD is shown in Figure 6-1483 and described in Table 6-1491.

Return to the Summary Table.

Figure 6-1483. RCSS_CSI2B_MDMA_BUS_SAFETY_ERR_STAT_CMD Register

31	30	29	28	27	26	25	24	23	22	21	20	19	18	17	16	15	14	13	12	11	10	9	8	7	6	5	4	3	2	1	0
stat																															
R-0h																															

Table 6-1491. RCSS_CSI2B_MDMA_BUS_SAFETY_ERR_STAT_CMD Register Field Descriptions

Bit	Field	Type	Reset	Description
31-0	stat	R	0h	

6.2.8.111 RCSS_CSI2B_MDMA_BUS_SAFETY_ERR_STAT_WRITE Register (Offset = 1BCh) [reset = 0h]

RCSS_CSI2B_MDMA_BUS_SAFETY_ERR_STAT_WRITE is shown in Figure 6-1484 and described in Table 6-1492.

Return to the Summary Table.

Figure 6-1484. RCSS_CSI2B_MDMA_BUS_SAFETY_ERR_STAT_WRITE Register

31	30	29	28	27	26	25	24	23	22	21	20	19	18	17	16	15	14	13	12	11	10	9	8	7	6	5	4	3	2	1	0
stat																															
R-0h																															

Table 6-1492. RCSS_CSI2B_MDMA_BUS_SAFETY_ERR_STAT_WRITE Register Field Descriptions

Bit	Field	Type	Reset	Description
31-0	stat	R	0h	

Copyright © 2025 Texas Instruments Incorporated

6.2.8.112 RCSS_CSI2B_MDMA_BUS_SAFETY_ERR_STAT_READ Register (Offset = 1C0h) [reset = 0h]

RCSS_CSI2B_MDMA_BUS_SAFETY_ERR_STAT_READ is shown in Figure 6-1485 and described in Table 6-1493.

Return to the Summary Table.

Figure 6-1485. RCSS_CSI2B_MDMA_BUS_SAFETY_ERR_STAT_READ Register

31	30	29	28	27	26	25	24	23	22	21	20	19	18	17	16	15	14	13	12	11	10	9	8	7	6	5	4	3	2	1	0
stat																															
R-0h																															

Table 6-1493. RCSS_CSI2B_MDMA_BUS_SAFETY_ERR_STAT_READ Register Field Descriptions

Bit	Field	Type	Reset	Description
31-0	stat	R	0h	

6.2.8.113 RCSS_CSI2B_MDMA_BUS_SAFETY_ERR_STAT_WRITERESP Register (Offset = 1C4h) [reset = 0h]

RCSS_CSI2B_MDMA_BUS_SAFETY_ERR_STAT_WRITERESP is shown in Figure 6-1486 and described in Table 6-1494.

Return to the Summary Table.

Figure 6-1486. RCSS_CSI2B_MDMA_BUS_SAFETY_ERR_STAT_WRITERESP Register

31	30	29	28	27	26	25	24	23	22	21	20	19	18	17	16	15	14	13	12	11	10	9	8	7	6	5	4	3	2	1	0
stat																															
R-0h																															

Table 6-1494. RCSS_CSI2B_MDMA_BUS_SAFETY_ERR_STAT_WRITERESP Register Field Descriptions

Bit	Field	Type	Reset	Description
31-0	stat	R	0h	

6.2.8.114 RCSS_PCR_BUS_SAFETY_CTRL Register (Offset = 1C8h) [reset = X]

RCSS_PCR_BUS_SAFETY_CTRL is shown in Figure 6-1487 and described in Table 6-1495.

Return to the Summary Table.

Figure 6-1487. RCSS_PCR_BUS_SAFETY_CTRL Register

31	30	29	28	27	26	25	24
RESERVED							
R/W-X							
23	22	21	20	19	18	17	16
type							
R-Fh							
15	14	13	12	11	10	9	8
RESERVED							err_clear
R/W-X							R/W-0h
7	6	5	4	3	2	1	0
RESERVED						enable	
R/W-X						R/W-7h	

Copyright © 2025 Texas Instruments Incorporated

Figure 6-1487. RCSS_PCR_BUS_SAFETY_CTRL Register (continued)

Table 6-1495. RCSS_PCR_BUS_SAFETY_CTRL Register Field Descriptions

Bit	Field	Type	Reset	Description
31-24	RESERVED	R/W	X	
23-16	type	R	Fh	
15-9	RESERVED	R/W	X	
8	err_clear	R/W	0h	
7-3	RESERVED	R/W	X	
2-0	enable	R/W	7h	

6.2.8.115 RCSS_PCR_BUS_SAFETY_FI Register (Offset = 1CCh) [reset = X]

RCSS_PCR_BUS_SAFETY_FI is shown in Figure 6-1488 and described in Table 6-1496.

Return to the Summary Table.

Figure 6-1488. RCSS_PCR_BUS_SAFETY_FI Register

31	30	29	28	27	26	25	24
safe							
R/W-0h							
23	22	21	20	19	18	17	16
main							
R/W-0h							
15	14	13	12	11	10	9	8
data							
R/W-0h							
7	6	5	4	3	2	1	0
RESERVED		ded	sec	global_safe_req	global_main_req	global_safe	global_main
R/W-X		R/W-0h	R/W-0h	R/W-0h	R/W-0h	R/W-0h	R/W-0h

Table 6-1496. RCSS_PCR_BUS_SAFETY_FI Register Field Descriptions

Bit	Field	Type	Reset	Description
31-24	safe	R/W	0h	
23-16	main	R/W	0h	
15-8	data	R/W	0h	
7-6	RESERVED	R/W	X	
5	ded	R/W	0h	
4	sec	R/W	0h	
3	global_safe_req	R/W	0h	
2	global_main_req	R/W	0h	
1	global_safe	R/W	0h	
0	global_main	R/W	0h	

6.2.8.116 RCSS_PCR_BUS_SAFETY_ERR Register (Offset = 1D0h) [reset = 0h]

RCSS_PCR_BUS_SAFETY_ERR is shown in Figure 6-1489 and described in Table 6-1497.

Copyright © 2025 Texas Instruments Incorporated

Return to the Summary Table.

Figure 6-1489. RCSS_PCR_BUS_SAFETY_ERR Register

31	30	29	28	27	26	25	24	23	22	21	20	19	18	17	16
ded								sec							
R-0h								R-0h							
15	14	13	12	11	10	9	8	7	6	5	4	3	2	1	0
comp_check								comp_err							
R-0h								R-0h							

Table 6-1497. RCSS_PCR_BUS_SAFETY_ERR Register Field Descriptions

Bit	Field	Type	Reset	Description
31-24	ded	R	0h	
23-16	sec	R	0h	
15-8	comp_check	R	0h	
7-0	comp_err	R	0h	

6.2.8.117 RCSS_PCR_BUS_SAFETY_ERR_STAT_DATA0 Register (Offset = 1D4h) [reset = X]

RCSS_PCR_BUS_SAFETY_ERR_STAT_DATA0 is shown in Figure 6-1490 and described in Table 6-1498.

Return to the Summary Table.

Figure 6-1490. RCSS_PCR_BUS_SAFETY_ERR_STAT_DATA0 Register

31	30	29	28	27	26	25	24	23	22	21	20	19	18	17	16	15	14	13	12	11	10	9	8	7	6	5	4	3	2	1	0
RESERVED																d1								d0							
R-X																R-0h								R-0h							

Table 6-1498. RCSS_PCR_BUS_SAFETY_ERR_STAT_DATA0 Register Field Descriptions

Bit	Field	Type	Reset	Description
31-16	RESERVED	R	X	
15-8	d1	R	0h	
7-0	d0	R	0h	

6.2.8.118 RCSS_PCR_BUS_SAFETY_ERR_STAT_CMD Register (Offset = 1D8h) [reset = 0h]

RCSS_PCR_BUS_SAFETY_ERR_STAT_CMD is shown in Figure 6-1491 and described in Table 6-1499.

Return to the Summary Table.

Figure 6-1491. RCSS_PCR_BUS_SAFETY_ERR_STAT_CMD Register

31	30	29	28	27	26	25	24	23	22	21	20	19	18	17	16	15	14	13	12	11	10	9	8	7	6	5	4	3	2	1	0
stat																															
R-0h																															

Table 6-1499. RCSS_PCR_BUS_SAFETY_ERR_STAT_CMD Register Field Descriptions

Bit	Field	Type	Reset	Description
31-0	stat	R	0h	

Copyright © 2025 Texas Instruments Incorporated

6.2.8.119 RCSS_PCR_BUS_SAFETY_ERR_STAT_WRITE Register (Offset = 1DCh) [reset = 0h]

RCSS_PCR_BUS_SAFETY_ERR_STAT_WRITE is shown in Figure 6-1492 and described in Table 6-1500.

Return to the Summary Table.

Figure 6-1492. RCSS_PCR_BUS_SAFETY_ERR_STAT_WRITE Register

31	30	29	28	27	26	25	24	23	22	21	20	19	18	17	16	15	14	13	12	11	10	9	8	7	6	5	4	3	2	1	0
stat																															
R-0h																															

Table 6-1500. RCSS_PCR_BUS_SAFETY_ERR_STAT_WRITE Register Field Descriptions

Bit	Field	Type	Reset	Description
31-0	stat	R	0h	

6.2.8.120 RCSS_PCR_BUS_SAFETY_ERR_STAT_READ Register (Offset = 1E0h) [reset = 0h]

RCSS_PCR_BUS_SAFETY_ERR_STAT_READ is shown in Figure 6-1493 and described in Table 6-1501.

Return to the Summary Table.

Figure 6-1493. RCSS_PCR_BUS_SAFETY_ERR_STAT_READ Register

31	30	29	28	27	26	25	24	23	22	21	20	19	18	17	16	15	14	13	12	11	10	9	8	7	6	5	4	3	2	1	0
stat																															
R-0h																															

Table 6-1501. RCSS_PCR_BUS_SAFETY_ERR_STAT_READ Register Field Descriptions

Bit	Field	Type	Reset	Description
31-0	stat	R	0h	

6.2.8.121 RCSS_PCR_BUS_SAFETY_ERR_STAT_WRITERESP Register (Offset = 1E4h) [reset = 0h]

RCSS_PCR_BUS_SAFETY_ERR_STAT_WRITERESP is shown in Figure 6-1494 and described in Table 6-1502.

Return to the Summary Table.

Figure 6-1494. RCSS_PCR_BUS_SAFETY_ERR_STAT_WRITERESP Register

31	30	29	28	27	26	25	24	23	22	21	20	19	18	17	16	15	14	13	12	11	10	9	8	7	6	5	4	3	2	1	0
stat																															
R-0h																															

Table 6-1502. RCSS_PCR_BUS_SAFETY_ERR_STAT_WRITERESP Register Field Descriptions

Bit	Field	Type	Reset	Description
31-0	stat	R	0h	

6.2.8.122 RCSS_MCASPA_BUS_SAFETY_CTRL Register (Offset = 1E8h) [reset = X]

RCSS_MCASPA_BUS_SAFETY_CTRL is shown in Figure 6-1495 and described in Table 6-1503.

Return to the Summary Table.

Figure 6-1495. RCSS_MCASPA_BUS_SAFETY_CTRL Register

31	30	29	28	27	26	25	24

Copyright © 2025 Texas Instruments Incorporated

Figure 6-1495. RCSS_MCASPA_BUS_SAFETY_CTRL Register (continued)

RESERVED							
R/W-X							
23	22	21	20	19	18	17	16
type							
R-Fh							
15	14	13	12	11	10	9	8
RESERVED							err_clear
R/W-X							R/W-0h
7	6	5	4	3	2	1	0
RESERVED						enable	
R/W-X						R/W-7h	

Table 6-1503. RCSS_MCASPA_BUS_SAFETY_CTRL Register Field Descriptions

Bit	Field	Type	Reset	Description
31-24	RESERVED	R/W	X	
23-16	type	R	Fh	
15-9	RESERVED	R/W	X	
8	err_clear	R/W	0h	
7-3	RESERVED	R/W	X	
2-0	enable	R/W	7h	

6.2.8.123 RCSS_MCASPA_BUS_SAFETY_FI Register (Offset = 1ECh) [reset = X]

RCSS_MCASPA_BUS_SAFETY_FI is shown in Figure 6-1496 and described in Table 6-1504.

Return to the Summary Table.

Figure 6-1496. RCSS_MCASPA_BUS_SAFETY_FI Register

31	30	29	28	27	26	25	24
safe							
R/W-0h							
23	22	21	20	19	18	17	16
main							
R/W-0h							
15	14	13	12	11	10	9	8
data							
R/W-0h							
7	6	5	4	3	2	1	0
RESERVED		ded	sec	global_safe_req	global_main_req	global_safe	global_main
R/W-X		R/W-0h	R/W-0h	R/W-0h	R/W-0h	R/W-0h	R/W-0h

Table 6-1504. RCSS_MCASPA_BUS_SAFETY_FI Register Field Descriptions

Bit	Field	Type	Reset	Description
31-24	safe	R/W	0h	
23-16	main	R/W	0h	

Copyright © 2025 Texas Instruments Incorporated

Table 6-1504. RCSS_MCASPA_BUS_SAFETY_FI Register Field Descriptions (continued)

Bit	Field	Type	Reset	Description
15-8	data	R/W	0h	
7-6	RESERVED	R/W	X	
5	ded	R/W	0h	
4	sec	R/W	0h	
3	global_safe_req	R/W	0h	
2	global_main_req	R/W	0h	
1	global_safe	R/W	0h	
0	global_main	R/W	0h	

6.2.8.124 RCSS_MCASPA_BUS_SAFETY_ERR Register (Offset = 1F0h) [reset = 0h]

RCSS_MCASPA_BUS_SAFETY_ERR is shown in Figure 6-1497 and described in Table 6-1505.

Return to the Summary Table.

Figure 6-1497. RCSS_MCASPA_BUS_SAFETY_ERR Register

31	30	29	28	27	26	25	24	23	22	21	20	19	18	17	16
ded								sec							
R-0h								R-0h							
15	14	13	12	11	10	9	8	7	6	5	4	3	2	1	0
comp_check								comp_err							
R-0h								R-0h							

Table 6-1505. RCSS_MCASPA_BUS_SAFETY_ERR Register Field Descriptions

Bit	Field	Type	Reset	Description
31-24	ded	R	0h	
23-16	sec	R	0h	
15-8	comp_check	R	0h	
7-0	comp_err	R	0h	

6.2.8.125 RCSS_MCASPA_BUS_SAFETY_ERR_STAT_DATA0 Register (Offset = 1F4h) [reset = X]

RCSS_MCASPA_BUS_SAFETY_ERR_STAT_DATA0 is shown in Figure 6-1498 and described in Table 6-1506.

Return to the Summary Table.

Figure 6-1498. RCSS_MCASPA_BUS_SAFETY_ERR_STAT_DATA0 Register

31	30	29	28	27	26	25	24	23	22	21	20	19	18	17	16	15	14	13	12	11	10	9	8	7	6	5	4	3	2	1	0
RESERVED																d1								d0							
R-X																R-0h								R-0h							

Table 6-1506. RCSS_MCASPA_BUS_SAFETY_ERR_STAT_DATA0 Register Field Descriptions

Bit	Field	Type	Reset	Description
31-16	RESERVED	R	X	
15-8	d1	R	0h	
7-0	d0	R	0h	

Copyright © 2025 Texas Instruments Incorporated

6.2.8.126 RCSS_MCASPA_BUS_SAFETY_ERR_STAT_CMD Register (Offset = 1F8h) [reset = 0h]

RCSS_MCASPA_BUS_SAFETY_ERR_STAT_CMD is shown in Figure 6-1499 and described in Table 6-1507.

Return to the Summary Table.

Figure 6-1499. RCSS_MCASPA_BUS_SAFETY_ERR_STAT_CMD Register

31	30	29	28	27	26	25	24	23	22	21	20	19	18	17	16	15	14	13	12	11	10	9	8	7	6	5	4	3	2	1	0
stat																															
R-0h																															

Table 6-1507. RCSS_MCASPA_BUS_SAFETY_ERR_STAT_CMD Register Field Descriptions

Bit	Field	Type	Reset	Description
31-0	stat	R	0h	

6.2.8.127 RCSS_MCASPA_BUS_SAFETY_ERR_STAT_WRITE Register (Offset = 1FCh) [reset = 0h]

RCSS_MCASPA_BUS_SAFETY_ERR_STAT_WRITE is shown in Figure 6-1500 and described in Table 6-1508.

Return to the Summary Table.

Figure 6-1500. RCSS_MCASPA_BUS_SAFETY_ERR_STAT_WRITE Register

31	30	29	28	27	26	25	24	23	22	21	20	19	18	17	16	15	14	13	12	11	10	9	8	7	6	5	4	3	2	1	0
stat																															
R-0h																															

Table 6-1508. RCSS_MCASPA_BUS_SAFETY_ERR_STAT_WRITE Register Field Descriptions

Bit	Field	Type	Reset	Description
31-0	stat	R	0h	

6.2.8.128 RCSS_MCASPA_BUS_SAFETY_ERR_STAT_READ Register (Offset = 200h) [reset = 0h]

RCSS_MCASPA_BUS_SAFETY_ERR_STAT_READ is shown in Figure 6-1501 and described in Table 6-1509.

Return to the Summary Table.

Figure 6-1501. RCSS_MCASPA_BUS_SAFETY_ERR_STAT_READ Register

31	30	29	28	27	26	25	24	23	22	21	20	19	18	17	16	15	14	13	12	11	10	9	8	7	6	5	4	3	2	1	0
stat																															
R-0h																															

Table 6-1509. RCSS_MCASPA_BUS_SAFETY_ERR_STAT_READ Register Field Descriptions

Bit	Field	Type	Reset	Description
31-0	stat	R	0h	

6.2.8.129 RCSS_MCASPA_BUS_SAFETY_ERR_STAT_WRITERESP Register (Offset = 204h) [reset = 0h]

RCSS_MCASPA_BUS_SAFETY_ERR_STAT_WRITERESP is shown in Figure 6-1502 and described in Table 6-1510.

Return to the Summary Table.

Figure 6-1502. RCSS_MCASPA_BUS_SAFETY_ERR_STAT_WRITERESP Register

31	30	29	28	27	26	25	24	23	22	21	20	19	18	17	16	15	14	13	12	11	10	9	8	7	6	5	4	3	2	1	0

Copyright © 2025 Texas Instruments Incorporated

Figure 6-1502. RCSS_MCASPA_BUS_SAFETY_ERR_STAT_WRITERESP Register (continued)

stat
R-0h

Table 6-1510. RCSS_MCASPA_BUS_SAFETY_ERR_STAT_WRITERESP Register Field Descriptions

Bit	Field	Type	Reset	Description
31-0	stat	R	0h	

6.2.8.130 RCSS_MCASPB_BUS_SAFETY_CTRL Register (Offset = 208h) [reset = X]

RCSS_MCASPB_BUS_SAFETY_CTRL is shown in Figure 6-1503 and described in Table 6-1511.

Return to the Summary Table.

Figure 6-1503. RCSS_MCASPB_BUS_SAFETY_CTRL Register

31	30	29	28	27	26	25	24
RESERVED							
R/W-X							
23	22	21	20	19	18	17	16
type							
R-Fh							
15	14	13	12	11	10	9	8
RESERVED							err_clear
R/W-X							R/W-0h
7	6	5	4	3	2	1	0
RESERVED						enable	
R/W-X						R/W-7h	

Table 6-1511. RCSS_MCASPB_BUS_SAFETY_CTRL Register Field Descriptions

Bit	Field	Type	Reset	Description
31-24	RESERVED	R/W	X	
23-16	type	R	Fh	
15-9	RESERVED	R/W	X	
8	err_clear	R/W	0h	
7-3	RESERVED	R/W	X	
2-0	enable	R/W	7h	

6.2.8.131 RCSS_MCASPB_BUS_SAFETY_FI Register (Offset = 20Ch) [reset = X]

RCSS_MCASPB_BUS_SAFETY_FI is shown in Figure 6-1504 and described in Table 6-1512.

Return to the Summary Table.

Figure 6-1504. RCSS_MCASPB_BUS_SAFETY_FI Register

31	30	29	28	27	26	25	24
safe							
R/W-0h							
23	22	21	20	19	18	17	16
main							

Copyright © 2025 Texas Instruments Incorporated

Figure 6-1504. RCSS_MCASPB_BUS_SAFETY_FI Register (continued)

R/W-0h							
15	14	13	12	11	10	9	8
data							
R/W-0h							
7	6	5	4	3	2	1	0
RESERVED		ded	sec	global_safe_req	global_main_req	global_safe	global_main
R/W-X		R/W-0h	R/W-0h	R/W-0h	R/W-0h	R/W-0h	R/W-0h

Table 6-1512. RCSS_MCASPB_BUS_SAFETY_FI Register Field Descriptions

Bit	Field	Type	Reset	Description
31-24	safe	R/W	0h	
23-16	main	R/W	0h	
15-8	data	R/W	0h	
7-6	RESERVED	R/W	X	
5	ded	R/W	0h	
4	sec	R/W	0h	
3	global_safe_req	R/W	0h	
2	global_main_req	R/W	0h	
1	global_safe	R/W	0h	
0	global_main	R/W	0h	

6.2.8.132 RCSS_MCASPB_BUS_SAFETY_ERR Register (Offset = 210h) [reset = 0h]

RCSS_MCASPB_BUS_SAFETY_ERR is shown in Figure 6-1505 and described in Table 6-1513.

Return to the Summary Table.

Figure 6-1505. RCSS_MCASPB_BUS_SAFETY_ERR Register

31	30	29	28	27	26	25	24	23	22	21	20	19	18	17	16
ded								sec							
R-0h								R-0h							
15	14	13	12	11	10	9	8	7	6	5	4	3	2	1	0
comp_check								comp_err							
R-0h								R-0h							

Table 6-1513. RCSS_MCASPB_BUS_SAFETY_ERR Register Field Descriptions

Bit	Field	Type	Reset	Description
31-24	ded	R	0h	
23-16	sec	R	0h	
15-8	comp_check	R	0h	
7-0	comp_err	R	0h	

6.2.8.133 RCSS_MCASPB_BUS_SAFETY_ERR_STAT_DATA0 Register (Offset = 214h) [reset = X]

RCSS_MCASPB_BUS_SAFETY_ERR_STAT_DATA0 is shown in Figure 6-1506 and described in Table 6-1514.

Return to the Summary Table.

Copyright © 2025 Texas Instruments Incorporated

Figure 6-1506. RCSS_MCASPB_BUS_SAFETY_ERR_STAT_DATA0 Register

31	30	29	28	27	26	25	24	23	22	21	20	19	18	17	16	15	14	13	12	11	10	9	8	7	6	5	4	3	2	1	0
RESERVED																d1								d0							
R-X																R-0h								R-0h							

Table 6-1514. RCSS_MCASPB_BUS_SAFETY_ERR_STAT_DATA0 Register Field Descriptions

Bit	Field	Type	Reset	Description
31-16	RESERVED	R	X	
15-8	d1	R	0h	
7-0	d0	R	0h	

6.2.8.134 RCSS_MCASPB_BUS_SAFETY_ERR_STAT_CMD Register (Offset = 218h) [reset = 0h]

RCSS_MCASPB_BUS_SAFETY_ERR_STAT_CMD is shown in Figure 6-1507 and described in Table 6-1515.

Return to the Summary Table.

Figure 6-1507. RCSS_MCASPB_BUS_SAFETY_ERR_STAT_CMD Register

31	30	29	28	27	26	25	24	23	22	21	20	19	18	17	16	15	14	13	12	11	10	9	8	7	6	5	4	3	2	1	0
stat																															
R-0h																															

Table 6-1515. RCSS_MCASPB_BUS_SAFETY_ERR_STAT_CMD Register Field Descriptions

Bit	Field	Type	Reset	Description
31-0	stat	R	0h	

6.2.8.135 RCSS_MCASPB_BUS_SAFETY_ERR_STAT_WRITE Register (Offset = 21Ch) [reset = 0h]

RCSS_MCASPB_BUS_SAFETY_ERR_STAT_WRITE is shown in Figure 6-1508 and described in Table 6-1516.

Return to the Summary Table.

Figure 6-1508. RCSS_MCASPB_BUS_SAFETY_ERR_STAT_WRITE Register

31	30	29	28	27	26	25	24	23	22	21	20	19	18	17	16	15	14	13	12	11	10	9	8	7	6	5	4	3	2	1	0
stat																															
R-0h																															

Table 6-1516. RCSS_MCASPB_BUS_SAFETY_ERR_STAT_WRITE Register Field Descriptions

Bit	Field	Type	Reset	Description
31-0	stat	R	0h	

6.2.8.136 RCSS_MCASPB_BUS_SAFETY_ERR_STAT_READ Register (Offset = 220h) [reset = 0h]

RCSS_MCASPB_BUS_SAFETY_ERR_STAT_READ is shown in Figure 6-1509 and described in Table 6-1517.

Return to the Summary Table.

Figure 6-1509. RCSS_MCASPB_BUS_SAFETY_ERR_STAT_READ Register

31	30	29	28	27	26	25	24	23	22	21	20	19	18	17	16	15	14	13	12	11	10	9	8	7	6	5	4	3	2	1	0
stat																															
R-0h																															

Copyright © 2025 Texas Instruments Incorporated

Table 6-1517. RCSS_MCASPB_BUS_SAFETY_ERR_STAT_READ Register Field Descriptions

Bit	Field	Type	Reset	Description
31-0	stat	R	0h	

6.2.8.137 RCSS_MCASPB_BUS_SAFETY_ERR_STAT_WRITERESP Register (Offset = 224h) [reset = 0h]

RCSS_MCASPB_BUS_SAFETY_ERR_STAT_WRITERESP is shown in Figure 6-1510 and described in Table 6-1518.

Return to the Summary Table.

Figure 6-1510. RCSS_MCASPB_BUS_SAFETY_ERR_STAT_WRITERESP Register

31	30	29	28	27	26	25	24	23	22	21	20	19	18	17	16	15	14	13	12	11	10	9	8	7	6	5	4	3	2	1	0
stat																															
R-0h																															

Table 6-1518. RCSS_MCASPB_BUS_SAFETY_ERR_STAT_WRITERESP Register Field Descriptions

Bit	Field	Type	Reset	Description
31-0	stat	R	0h	

6.2.8.138 RCSS_MCASPC_BUS_SAFETY_CTRL Register (Offset = 228h) [reset = X]

RCSS_MCASPC_BUS_SAFETY_CTRL is shown in Figure 6-1511 and described in Table 6-1519.

Return to the Summary Table.

Figure 6-1511. RCSS_MCASPC_BUS_SAFETY_CTRL Register

31	30	29	28	27	26	25	24
RESERVED							
R/W-X							
23	22	21	20	19	18	17	16
type							
R-Fh							
15	14	13	12	11	10	9	8
RESERVED							err_clear
R/W-X							R/W-0h
7	6	5	4	3	2	1	0
RESERVED						enable	
R/W-X						R/W-7h	

Table 6-1519. RCSS_MCASPC_BUS_SAFETY_CTRL Register Field Descriptions

Bit	Field	Type	Reset	Description
31-24	RESERVED	R/W	X	
23-16	type	R	Fh	
15-9	RESERVED	R/W	X	
8	err_clear	R/W	0h	
7-3	RESERVED	R/W	X	
2-0	enable	R/W	7h	

Copyright © 2025 Texas Instruments Incorporated

6.2.8.139 RCSS_MCASPC_BUS_SAFETY_FI Register (Offset = 22Ch) [reset = X]

RCSS_MCASPC_BUS_SAFETY_FI is shown in Figure 6-1512 and described in Table 6-1520.

Return to the Summary Table.

Figure 6-1512. RCSS_MCASPC_BUS_SAFETY_FI Register

31	30	29	28	27	26	25	24
safe							
R/W-0h							
23	22	21	20	19	18	17	16
main							
R/W-0h							
15	14	13	12	11	10	9	8
data							
R/W-0h							
7	6	5	4	3	2	1	0
RESERVED		ded	sec	global_safe_req	global_main_req	global_safe	global_main
R/W-X		R/W-0h	R/W-0h	R/W-0h	R/W-0h	R/W-0h	R/W-0h

Table 6-1520. RCSS_MCASPC_BUS_SAFETY_FI Register Field Descriptions

Bit	Field	Type	Reset	Description
31-24	safe	R/W	0h	
23-16	main	R/W	0h	
15-8	data	R/W	0h	
7-6	RESERVED	R/W	X	
5	ded	R/W	0h	
4	sec	R/W	0h	
3	global_safe_req	R/W	0h	
2	global_main_req	R/W	0h	
1	global_safe	R/W	0h	
0	global_main	R/W	0h	

6.2.8.140 RCSS_MCASPC_BUS_SAFETY_ERR Register (Offset = 230h) [reset = 0h]

RCSS_MCASPC_BUS_SAFETY_ERR is shown in Figure 6-1513 and described in Table 6-1521.

Return to the Summary Table.

Figure 6-1513. RCSS_MCASPC_BUS_SAFETY_ERR Register

31	30	29	28	27	26	25	24	23	22	21	20	19	18	17	16
ded								sec							
R-0h								R-0h							
15	14	13	12	11	10	9	8	7	6	5	4	3	2	1	0
comp_check								comp_err							
R-0h								R-0h							

Copyright © 2025 Texas Instruments Incorporated

Table 6-1521. RCSS_MCASPC_BUS_SAFETY_ERR Register Field Descriptions

Bit	Field	Type	Reset	Description
31-24	ded	R	0h	
23-16	sec	R	0h	
15-8	comp_check	R	0h	
7-0	comp_err	R	0h	

6.2.8.141 RCSS_MCASPC_BUS_SAFETY_ERR_STAT_DATA0 Register (Offset = 234h) [reset = X]

RCSS_MCASPC_BUS_SAFETY_ERR_STAT_DATA0 is shown in Figure 6-1514 and described in Table 6-1522.

Return to the Summary Table.

Figure 6-1514. RCSS_MCASPC_BUS_SAFETY_ERR_STAT_DATA0 Register

31	30	29	28	27	26	25	24	23	22	21	20	19	18	17	16	15	14	13	12	11	10	9	8	7	6	5	4	3	2	1	0
RESERVED																d1								d0							
R-X																R-0h								R-0h							

Table 6-1522. RCSS_MCASPC_BUS_SAFETY_ERR_STAT_DATA0 Register Field Descriptions

Bit	Field	Type	Reset	Description
31-16	RESERVED	R	X	
15-8	d1	R	0h	
7-0	d0	R	0h	

6.2.8.142 RCSS_MCASPC_BUS_SAFETY_ERR_STAT_CMD Register (Offset = 238h) [reset = 0h]

RCSS_MCASPC_BUS_SAFETY_ERR_STAT_CMD is shown in Figure 6-1515 and described in Table 6-1523.

Return to the Summary Table.

Figure 6-1515. RCSS_MCASPC_BUS_SAFETY_ERR_STAT_CMD Register

31	30	29	28	27	26	25	24	23	22	21	20	19	18	17	16	15	14	13	12	11	10	9	8	7	6	5	4	3	2	1	0
stat																															
R-0h																															

Table 6-1523. RCSS_MCASPC_BUS_SAFETY_ERR_STAT_CMD Register Field Descriptions

Bit	Field	Type	Reset	Description
31-0	stat	R	0h	

6.2.8.143 RCSS_MCASPC_BUS_SAFETY_ERR_STAT_WRITE Register (Offset = 23Ch) [reset = 0h]

RCSS_MCASPC_BUS_SAFETY_ERR_STAT_WRITE is shown in Figure 6-1516 and described in Table 6-1524.

Return to the Summary Table.

Figure 6-1516. RCSS_MCASPC_BUS_SAFETY_ERR_STAT_WRITE Register

31	30	29	28	27	26	25	24	23	22	21	20	19	18	17	16	15	14	13	12	11	10	9	8	7	6	5	4	3	2	1	0
stat																															
R-0h																															

Copyright © 2025 Texas Instruments Incorporated

Table 6-1524. RCSS_MCASPC_BUS_SAFETY_ERR_STAT_WRITE Register Field Descriptions

Bit	Field	Type	Reset	Description
31-0	stat	R	0h	

6.2.8.144 RCSS_MCASPC_BUS_SAFETY_ERR_STAT_READ Register (Offset = 240h) [reset = 0h]

RCSS_MCASPC_BUS_SAFETY_ERR_STAT_READ is shown in Figure 6-1517 and described in Table 6-1525.

Return to the Summary Table.

Figure 6-1517. RCSS_MCASPC_BUS_SAFETY_ERR_STAT_READ Register

31	30	29	28	27	26	25	24	23	22	21	20	19	18	17	16	15	14	13	12	11	10	9	8	7	6	5	4	3	2	1	0
stat																															
R-0h																															

Table 6-1525. RCSS_MCASPC_BUS_SAFETY_ERR_STAT_READ Register Field Descriptions

Bit	Field	Type	Reset	Description
31-0	stat	R	0h	

6.2.8.145 RCSS_MCASPC_BUS_SAFETY_ERR_STAT_WRITERESP Register (Offset = 244h) [reset = 0h]

RCSS_MCASPC_BUS_SAFETY_ERR_STAT_WRITERESP is shown in Figure 6-1518 and described in Table 6-1526.

Return to the Summary Table.

Figure 6-1518. RCSS_MCASPC_BUS_SAFETY_ERR_STAT_WRITERESP Register

31	30	29	28	27	26	25	24	23	22	21	20	19	18	17	16	15	14	13	12	11	10	9	8	7	6	5	4	3	2	1	0
stat																															
R-0h																															

Table 6-1526. RCSS_MCASPC_BUS_SAFETY_ERR_STAT_WRITERESP Register Field Descriptions

Bit	Field	Type	Reset	Description
31-0	stat	R	0h	

6.2.8.146 RCSS_SCIA_CTRL Register (Offset = 248h) [reset = X]

RCSS_SCIA_CTRL is shown in Figure 6-1519 and described in Table 6-1527.

Return to the Summary Table.

Figure 6-1519. RCSS_SCIA_CTRL Register

31	30	29	28	27	26	25	24
RESERVED							
R/W-X							
23	22	21	20	19	18	17	16
RESERVED							
R/W-X							
15	14	13	12	11	10	9	8
RESERVED							
R/W-X							

Copyright © 2025 Texas Instruments Incorporated

Figure 6-1519. RCSS_SCIA_CTRL Register (continued)

7	6	5	4	3	2	1	0
RESERVED			DMA_RX_CLR	RESERVED			DMA_TX_CLR
R/W-X			R/W-0h	R/W-X			R/W-0h

Table 6-1527. RCSS_SCIA_CTRL Register Field Descriptions

Bit	Field	Type	Reset	Description
31-5	RESERVED	R/W	X	
4	DMA_RX_CLR	R/W	0h	RCSS_SCIA RX DMA Clear. Write 0x1 to Clear the Receive DMA Request
3-1	RESERVED	R/W	X	
0	DMA_TX_CLR	R/W	0h	RCSS_SCIA TX DMA Clear. Write 0x1 to Clear the Transmit DMA Request

6.2.8.147 RCSS_GIO_CFG Register (Offset = 24Ch) [reset = 0h]

RCSS_GIO_CFG is shown in Figure 6-1520 and described in Table 6-1528.

Return to the Summary Table.

Figure 6-1520. RCSS_GIO_CFG Register

31	30	29	28	27	26	25	24	23	22	21	20	19	18	17	16	15	14	13	12	11	10	9	8	7	6	5	4	3	2	1	0
gio_config																															
R/W-0h																															

Table 6-1528. RCSS_GIO_CFG Register Field Descriptions

Bit	Field	Type	Reset	Description
31-0	gio_config	R/W	0h	bit0 : writing '1' will select negedge for pulse generation of GIO_PAD_INT0 to IRQ bit1 : writing '1' will select negedge for pulse generation of GIO_PAD_INT1to IRQ bit2: writing '1' will select negedge for pulse generation of GIO_PAD_INT2 to IRQ bit3 : writing '1' will select negedge for pulse generation of GIO_PAD_INT3 to IRQ bit4 : writing '1' will select negedge for pulse generation of GIO_PAD_INT4 to IRQ bit5 : writing '1' will select negedge for pulse generation of GIO_PAD_INT5 to IRQ bit6 : writing '1' will select negedge for pulse generation of GIO_PAD_INT6 to IRQ bit7 : writing '1' will select negedge for pulse generation of GIO_PAD_INT7 to IRQ

6.2.8.148 RCSS_TPTC_BOUNDARY_CFG Register (Offset = 250h) [reset = X]

RCSS_TPTC_BOUNDARY_CFG is shown in Figure 6-1521 and described in Table 6-1529.

Return to the Summary Table.

Figure 6-1521. RCSS_TPTC_BOUNDARY_CFG Register

31	30	29	28	27	26	25	24
RESERVED							
R/W-X							
23	22	21	20	19	18	17	16
RESERVED							
R/W-X							
15	14	13	12	11	10	9	8
RESERVED		tptc_a1_size					

Copyright © 2025 Texas Instruments Incorporated

Figure 6-1521. RCSS_TPTC_BOUNDARY_CFG Register (continued)

R/W-X							R/W-13h
7	6	5	4	3	2	1	0
RESERVED				tptc_a0_size			
R/W-X				R/W-13h			

Table 6-1529. RCSS_TPTC_BOUNDARY_CFG Register Field Descriptions

Bit	Field	Type	Reset	Description
31-14	RESERVED	R/W	X	
13-8	tptc_a1_size	R/W	13h	6 bit signal used for deciding the boundary crossing size for CID-RID-SID reordering of TPTC Example: writing 6'd19 decides boundary to be 2 ^{19} i.e. 512 KB
7-6	RESERVED	R/W	X	
5-0	tptc_a0_size	R/W	13h	6 bit signal used for deciding the boundary crossing size for CID-RID-SID reordering of TPTC Example: writing 6'd19 decides boundary to be 2 ^{19} i.e. 512 KB

6.2.8.149 RCSS_TPTC_XID_REORDER_CFG Register (Offset = 254h) [reset = X]

RCSS_TPTC_XID_REORDER_CFG is shown in Figure 6-1522 and described in Table 6-1530.

Return to the Summary Table.

Figure 6-1522. RCSS_TPTC_XID_REORDER_CFG Register

31	30	29	28	27	26	25	24
RESERVED							
R/W-X							
23	22	21	20	19	18	17	16
RESERVED							
R/W-X							
15	14	13	12	11	10	9	8
RESERVED							tptc_a1_disable
R/W-X							R/W-0h
7	6	5	4	3	2	1	0
RESERVED							tptc_a0_disable
R/W-X							R/W-0h

Table 6-1530. RCSS_TPTC_XID_REORDER_CFG Register Field Descriptions

Bit	Field	Type	Reset	Description
31-9	RESERVED	R/W	X	
8	tptc_a1_disable	R/W	0h	Writing 1'b1 will disable the CID-RID-SID reodering feature for the TPTC instance
7-1	RESERVED	R/W	X	
0	tptc_a0_disable	R/W	0h	Writing 1'b1 will disable the CID-RID-SID reodering feature for the TPTC instance

6.2.8.150 DBG_ACK_CPU_CTRL Register (Offset = 258h) [reset = X]

DBG_ACK_CPU_CTRL is shown in Figure 6-1523 and described in Table 6-1531.

Copyright © 2025 Texas Instruments Incorporated

Return to the Summary Table.

Figure 6-1523. DBG_ACK_CPU_CTRL Register

31	30	29	28	27	26	25	24	23	22	21	20	19	18	17	16
RESERVED															
R/W-X															
15	14	13	12	11	10	9	8	7	6	5	4	3	2	1	0
RESERVED															sel
R/W-X															R/W-0h

Table 6-1531. DBG_ACK_CPU_CTRL Register Field Descriptions

Bit	Field	Type	Reset	Description
31-1	RESERVED	R/W	X	
0	sel	R/W	0h	Select the Processor Suspend that is used to Suspend the DSS Peripherals 0: DSP 1:MSS CR5

6.2.8.151 DBG_ACK_CTL0 Register (Offset = 25Ch) [reset = X]

DBG_ACK_CTL0 is shown in Figure 6-1524 and described in Table 6-1532.

Return to the Summary Table.

Figure 6-1524. DBG_ACK_CTL0 Register

31	30	29	28	27	26	25	24
RESERVED							
R/W-X							
23	22	21	20	19	18	17	16
RESERVED							
R/W-X							
15	14	13	12	11	10	9	8
RESERVED					RCSS_ECAP		
R/W-X					R/W-0h		
7	6	5	4	3	2	1	0
RESERVED	RCSS_I2CB			RESERVED	RCSS_I2CA		
R/W-X	R/W-0h			R/W-X	R/W-0h		

Table 6-1532. DBG_ACK_CTL0 Register Field Descriptions

Bit	Field	Type	Reset	Description
31-11	RESERVED	R/W	X	
10-8	RCSS_ECAP	R/W	0h	Enable Suspend of the peripheral. 0 : Peripheral not suspended 1: Peripheral Suspended
7	RESERVED	R/W	X	
6-4	RCSS_I2CB	R/W	0h	Enable Suspend of the peripheral. 0 : Peripheral not suspended 1: Peripheral Suspended
3	RESERVED	R/W	X	
2-0	RCSS_I2CA	R/W	0h	Enable Suspend of the peripheral. 0 : Peripheral not suspended 1: Peripheral Suspended

Copyright © 2025 Texas Instruments Incorporated

6.2.8.152 HW_SPARE_RW0 Register (Offset = FD0h) [reset = 0h]

HW_SPARE_RW0 is shown in Figure 6-1525 and described in Table 6-1533.

Return to the Summary Table.

Figure 6-1525. HW_SPARE_RW0 Register

31	30	29	28	27	26	25	24	23	22	21	20	19	18	17	16	15	14	13	12	11	10	9	8	7	6	5	4	3	2	1	0
hw_spare_rw0																															
R/W-0h																															

Table 6-1533. HW_SPARE_RW0 Register Field Descriptions

Bit	Field	Type	Reset	Description
31-0	hw_spare_rw0	R/W	0h	Reserved for HW R&D

6.2.8.153 HW_SPARE_RW1 Register (Offset = FD4h) [reset = 0h]

HW_SPARE_RW1 is shown in Figure 6-1526 and described in Table 6-1534.

Return to the Summary Table.

Figure 6-1526. HW_SPARE_RW1 Register

31	30	29	28	27	26	25	24	23	22	21	20	19	18	17	16	15	14	13	12	11	10	9	8	7	6	5	4	3	2	1	0
hw_spare_rw1																															
R/W-0h																															

Table 6-1534. HW_SPARE_RW1 Register Field Descriptions

Bit	Field	Type	Reset	Description
31-0	hw_spare_rw1	R/W	0h	Reserved for HW R&D

6.2.8.154 HW_SPARE_RW2 Register (Offset = FD8h) [reset = 0h]

HW_SPARE_RW2 is shown in Figure 6-1527 and described in Table 6-1535.

Return to the Summary Table.

Figure 6-1527. HW_SPARE_RW2 Register

31	30	29	28	27	26	25	24	23	22	21	20	19	18	17	16	15	14	13	12	11	10	9	8	7	6	5	4	3	2	1	0
hw_spare_rw2																															
R/W-0h																															

Table 6-1535. HW_SPARE_RW2 Register Field Descriptions

Bit	Field	Type	Reset	Description
31-0	hw_spare_rw2	R/W	0h	Reserved for HW R&D

6.2.8.155 HW_SPARE_RW3 Register (Offset = FDCh) [reset = 0h]

HW_SPARE_RW3 is shown in Figure 6-1528 and described in Table 6-1536.

Return to the Summary Table.

Figure 6-1528. HW_SPARE_RW3 Register

31	30	29	28	27	26	25	24	23	22	21	20	19	18	17	16	15	14	13	12	11	10	9	8	7	6	5	4	3	2	1	0
hw_spare_rw3																															

Copyright © 2025 Texas Instruments Incorporated

Figure 6-1528. HW_SPARE_RW3 Register (continued)

R/W-0h

Table 6-1536. HW_SPARE_RW3 Register Field Descriptions

Bit	Field	Type	Reset	Description
31-0	hw_spare_rw3	R/W	0h	Reserved for HW R&D

6.2.8.156 HW_SPARE_RO0 Register (Offset = FE0h) [reset = 0h]

HW_SPARE_RO0 is shown in Figure 6-1529 and described in Table 6-1537.

Return to the Summary Table.

Figure 6-1529. HW_SPARE_RO0 Register

31	30	29	28	27	26	25	24	23	22	21	20	19	18	17	16	15	14	13	12	11	10	9	8	7	6	5	4	3	2	1	0
hw_spare_ro0																															
R-0h																															

Table 6-1537. HW_SPARE_RO0 Register Field Descriptions

Bit	Field	Type	Reset	Description
31-0	hw_spare_ro0	R	0h	Reserved for HW R&D

6.2.8.157 HW_SPARE_RO1 Register (Offset = FE4h) [reset = 0h]

HW_SPARE_RO1 is shown in Figure 6-1530 and described in Table 6-1538.

Return to the Summary Table.

Figure 6-1530. HW_SPARE_RO1 Register

31	30	29	28	27	26	25	24	23	22	21	20	19	18	17	16	15	14	13	12	11	10	9	8	7	6	5	4	3	2	1	0
hw_spare_ro1																															
R-0h																															

Table 6-1538. HW_SPARE_RO1 Register Field Descriptions

Bit	Field	Type	Reset	Description
31-0	hw_spare_ro1	R	0h	Reserved for HW R&D

6.2.8.158 HW_SPARE_RO2 Register (Offset = FE8h) [reset = 0h]

HW_SPARE_RO2 is shown in Figure 6-1531 and described in Table 6-1539.

Return to the Summary Table.

Figure 6-1531. HW_SPARE_RO2 Register

31	30	29	28	27	26	25	24	23	22	21	20	19	18	17	16	15	14	13	12	11	10	9	8	7	6	5	4	3	2	1	0
hw_spare_ro2																															
R-0h																															

Table 6-1539. HW_SPARE_RO2 Register Field Descriptions

Bit	Field	Type	Reset	Description
31-0	hw_spare_ro2	R	0h	Reserved for HW R&D

Copyright © 2025 Texas Instruments Incorporated

6.2.8.159 HW_SPARE_RO3 Register (Offset = FECh) [reset = 0h]

HW_SPARE_RO3 is shown in Figure 6-1532 and described in Table 6-1540.

Return to the Summary Table.

Figure 6-1532. HW_SPARE_RO3 Register

31	30	29	28	27	26	25	24	23	22	21	20	19	18	17	16	15	14	13	12	11	10	9	8	7	6	5	4	3	2	1	0
hw_spare_ro3																															
R-0h																															

Table 6-1540. HW_SPARE_RO3 Register Field Descriptions

Bit	Field	Type	Reset	Description
31-0	hw_spare_ro3	R	0h	Reserved for HW R&D

6.2.8.160 HW_SPARE_WPH Register (Offset = FF0h) [reset = 0h]

HW_SPARE_WPH is shown in Figure 6-1533 and described in Table 6-1541.

Return to the Summary Table.

Figure 6-1533. HW_SPARE_WPH Register

31	30	29	28	27	26	25	24	23	22	21	20	19	18	17	16	15	14	13	12	11	10	9	8	7	6	5	4	3	2	1	0
hw_spare_wph																															
R/W-0h																															

Table 6-1541. HW_SPARE_WPH Register Field Descriptions

Bit	Field	Type	Reset	Description
31-0	hw_spare_wph	R/W	0h	Reserved for HW R&D

6.2.8.161 HW_SPARE_REC Register (Offset = FF4h) [reset = 0h]

HW_SPARE_REC is shown in Figure 6-1534 and described in Table 6-1542.

Return to the Summary Table.

Figure 6-1534. HW_SPARE_REC Register

31	30	29	28	27	26	25	24
hw_spare_rec31	hw_spare_rec30	hw_spare_rec29	hw_spare_rec28	hw_spare_rec27	hw_spare_rec26	hw_spare_rec25	hw_spare_rec24
R/W-0h	R/W-0h	R/W-0h	R/W-0h	R/W-0h	R/W-0h	R/W-0h	R/W-0h
23	22	21	20	19	18	17	16
hw_spare_rec23	hw_spare_rec22	hw_spare_rec21	hw_spare_rec20	hw_spare_rec19	hw_spare_rec18	hw_spare_rec17	hw_spare_rec16
R/W-0h	R/W-0h	R/W-0h	R/W-0h	R/W-0h	R/W-0h	R/W-0h	R/W-0h
15	14	13	12	11	10	9	8
hw_spare_rec15	hw_spare_rec14	hw_spare_rec13	hw_spare_rec12	hw_spare_rec11	hw_spare_rec10	hw_spare_rec9	hw_spare_rec8
R/W-0h	R/W-0h	R/W-0h	R/W-0h	R/W-0h	R/W-0h	R/W-0h	R/W-0h
7	6	5	4	3	2	1	0
hw_spare_rec7	hw_spare_rec6	hw_spare_rec5	hw_spare_rec4	hw_spare_rec3	hw_spare_rec2	hw_spare_rec1	hw_spare_rec0
R/W-0h	R/W-0h	R/W-0h	R/W-0h	R/W-0h	R/W-0h	R/W-0h	R/W-0h

Copyright © 2025 Texas Instruments Incorporated

Table 6-1542. HW_SPARE_REC Register Field Descriptions

Bit	Field	Type	Reset	Description
31	hw_spare_rec31	R/W	0h	Reserved for HW R&D
30	hw_spare_rec30	R/W	0h	Reserved for HW R&D
29	hw_spare_rec29	R/W	0h	Reserved for HW R&D
28	hw_spare_rec28	R/W	0h	Reserved for HW R&D
27	hw_spare_rec27	R/W	0h	Reserved for HW R&D
26	hw_spare_rec26	R/W	0h	Reserved for HW R&D
25	hw_spare_rec25	R/W	0h	Reserved for HW R&D
24	hw_spare_rec24	R/W	0h	Reserved for HW R&D
23	hw_spare_rec23	R/W	0h	Reserved for HW R&D
22	hw_spare_rec22	R/W	0h	Reserved for HW R&D
21	hw_spare_rec21	R/W	0h	Reserved for HW R&D
20	hw_spare_rec20	R/W	0h	Reserved for HW R&D
19	hw_spare_rec19	R/W	0h	Reserved for HW R&D
18	hw_spare_rec18	R/W	0h	Reserved for HW R&D
17	hw_spare_rec17	R/W	0h	Reserved for HW R&D
16	hw_spare_rec16	R/W	0h	Reserved for HW R&D
15	hw_spare_rec15	R/W	0h	Reserved for HW R&D
14	hw_spare_rec14	R/W	0h	Reserved for HW R&D
13	hw_spare_rec13	R/W	0h	Reserved for HW R&D
12	hw_spare_rec12	R/W	0h	Reserved for HW R&D
11	hw_spare_rec11	R/W	0h	Reserved for HW R&D
10	hw_spare_rec10	R/W	0h	Reserved for HW R&D
9	hw_spare_rec9	R/W	0h	Reserved for HW R&D
8	hw_spare_rec8	R/W	0h	Reserved for HW R&D
7	hw_spare_rec7	R/W	0h	Reserved for HW R&D
6	hw_spare_rec6	R/W	0h	Reserved for HW R&D
5	hw_spare_rec5	R/W	0h	Reserved for HW R&D
4	hw_spare_rec4	R/W	0h	Reserved for HW R&D
3	hw_spare_rec3	R/W	0h	Reserved for HW R&D
2	hw_spare_rec2	R/W	0h	Reserved for HW R&D
1	hw_spare_rec1	R/W	0h	Reserved for HW R&D
0	hw_spare_rec0	R/W	0h	Reserved for HW R&D

6.2.8.162 LOCK0_KICK0 Register (Offset = 1008h) [reset = 0h]

LOCK0_KICK0 is shown in Figure 6-1535 and described in Table 6-1543.

Return to the Summary Table.

- KICK0 component

Figure 6-1535. LOCK0_KICK0 Register

31	30	29	28	27	26	25	24	23	22	21	20	19	18	17	16	15	14	13	12	11	10	9	8	7	6	5	4	3	2	1	0
LOCK0_kick0																															
R/W-0h																															

Copyright © 2025 Texas Instruments Incorporated

Table 6-1543. LOCK0_KICK0 Register Field Descriptions

Bit	Field	Type	Reset	Description
31-0	LOCK0_kick0	R/W	0h	- KICK0 component

6.2.8.163 LOCK0_KICK1 Register (Offset = 100Ch) [reset = 0h]

LOCK0_KICK1 is shown in Figure 6-1536 and described in Table 6-1544.

Return to the Summary Table.

- KICK1 component

Figure 6-1536. LOCK0_KICK1 Register

31	30	29	28	27	26	25	24	23	22	21	20	19	18	17	16	15	14	13	12	11	10	9	8	7	6	5	4	3	2	1	0
LOCK0_kick1																															
R/W-0h																															

Table 6-1544. LOCK0_KICK1 Register Field Descriptions

Bit	Field	Type	Reset	Description
31-0	LOCK0_kick1	R/W	0h	- KICK1 component

6.2.8.164 intr_raw_status Register (Offset = 1010h) [reset = X]

intr_raw_status is shown in Figure 6-1537 and described in Table 6-1545.

Return to the Summary Table.

Interrupt Raw Status/Set Register

Figure 6-1537. intr_raw_status Register

31	30	29	28	27	26	25	24
RESERVED							
R/W-X							
23	22	21	20	19	18	17	16
RESERVED							
R/W-X							
15	14	13	12	11	10	9	8
RESERVED							
R/W-X							
7	6	5	4	3	2	1	0
RESERVED				proxy_err	kick_err	addr_err	prot_err
R/W-X				R/W1S-0h	R/W1S-0h	R/W1S-0h	R/W1S-0h

Table 6-1545. intr_raw_status Register Field Descriptions

Bit	Field	Type	Reset	Description
31-4	RESERVED	R/W	X	
3	proxy_err	R/W1S	0h	Proxy0 access violation error. Raw status is read. Write a 1 to set the status. Writing a 0 has no effect.
2	kick_err	R/W1S	0h	Kick access violation error. Raw status is read. Write a 1 to set the status. Writing a 0 has no effect.
1	addr_err	R/W1S	0h	Addressing violation error. Raw status is read. Write a 1 to set the status. Writing a 0 has no effect.

Copyright © 2025 Texas Instruments Incorporated

Table 6-1545. intr_raw_status Register Field Descriptions (continued)

Bit	Field	Type	Reset	Description
0	prot_err	R/W1S	0h	Protection violation error. Raw status is read. Write a 1 to set the status. Writing a 0 has no effect.

6.2.8.165 intr_enabled_status_clear Register (Offset = 1014h) [reset = X]

intr_enabled_status_clear is shown in Figure 6-1538 and described in Table 6-1546.

Return to the Summary Table.

Interrupt Enabled Status/Clear register

Figure 6-1538. intr_enabled_status_clear Register

31	30	29	28	27	26	25	24
RESERVED							
R/W-X							
23	22	21	20	19	18	17	16
RESERVED							
R/W-X							
15	14	13	12	11	10	9	8
RESERVED							
R/W-X							
7	6	5	4	3	2	1	0
RESERVED				enabled_proxy_err	enabled_kick_err	enabled_addr_err	enabled_prot_err
R/W-X				R/W1C-0h	R/W1C-0h	R/W1C-0h	R/W1C-0h

Table 6-1546. intr_enabled_status_clear Register Field Descriptions

Bit	Field	Type	Reset	Description
31-4	RESERVED	R/W	X	
3	enabled_proxy_err	R/W1C	0h	Proxy0 access violation error. Enabled status is read. Write a 1 to clear the status. Writing a 0 has no effect.
2	enabled_kick_err	R/W1C	0h	Kick access violation error. Enabled status is read. Write a 1 to clear the status. Writing a 0 has no effect.
1	enabled_addr_err	R/W1C	0h	Addressing violation error. Enabled status is read. Write a 1 to clear the status. Writing a 0 has no effect.
0	enabled_prot_err	R/W1C	0h	Protection violation error. Enabled status is read. Write a 1 to clear the status. Writing a 0 has no effect.

6.2.8.166 intr_enable Register (Offset = 1018h) [reset = X]

intr_enable is shown in Figure 6-1539 and described in Table 6-1547.

Return to the Summary Table.

Interrupt Enable register

Figure 6-1539. intr_enable Register

31	30	29	28	27	26	25	24
RESERVED							
R/W-X							

Copyright © 2025 Texas Instruments Incorporated

Figure 6-1539. intr_enable Register (continued)

23	22	21	20	19	18	17	16
RESERVED							
R/W-X							
15	14	13	12	11	10	9	8
RESERVED							
R/W-X							
7	6	5	4	3	2	1	0
RESERVED				proxy_err_en	kick_err_en	addr_err_en	prot_err_en
R/W-X				R/W1S-0h	R/W1S-0h	R/W1S-0h	R/W1S-0h

Table 6-1547. intr_enable Register Field Descriptions

Bit	Field	Type	Reset	Description
31-4	RESERVED	R/W	X	
3	proxy_err_en	R/W1S	0h	Proxy0 access violation error enable. Write a 1 to set the enable. Writing a 0 has no effect.
2	kick_err_en	R/W1S	0h	Kick access violation error enable. Write a 1 to set the enable. Writing a 0 has no effect.
1	addr_err_en	R/W1S	0h	Addressing violation error enable. Write a 1 to set the enable. Writing a 0 has no effect.
0	prot_err_en	R/W1S	0h	Protection violation error enable. Write a 1 to set the enable. Writing a 0 has no effect.

6.2.8.167 intr_enable_clear Register (Offset = 101Ch) [reset = X]

intr_enable_clear is shown in Figure 6-1540 and described in Table 6-1548.

Return to the Summary Table.

Interrupt Enable Clear register

Figure 6-1540. intr_enable_clear Register

31	30	29	28	27	26	25	24
RESERVED							
R/W-X							
23	22	21	20	19	18	17	16
RESERVED							
R/W-X							
15	14	13	12	11	10	9	8
RESERVED							
R/W-X							
7	6	5	4	3	2	1	0
RESERVED				proxy_err_en_clr	kick_err_en_clr	addr_err_en_clr	prot_err_en_clr
R/W-X				R/W1C-0h	R/W1C-0h	R/W1C-0h	R/W1C-0h

Table 6-1548. intr_enable_clear Register Field Descriptions

Bit	Field	Type	Reset	Description
31-4	RESERVED	R/W	X	

Copyright © 2025 Texas Instruments Incorporated

Table 6-1548. intr_enable_clear Register Field Descriptions (continued)

Bit	Field	Type	Reset	Description
3	proxy_err_en_clr	R/W1C	0h	Proxy0 access violation error enable clear. Write a 1 to clear the enable. Writing a 0 has no effect.
2	kick_err_en_clr	R/W1C	0h	Kick access violation error enable clear. Write a 1 to clear the enable. Writing a 0 has no effect.
1	addr_err_en_clr	R/W1C	0h	Addressing violation error enable clear. Write a 1 to clear the enable. Writing a 0 has no effect.
0	prot_err_en_clr	R/W1C	0h	Protection violation error enable clear. Write a 1 to clear the enable. Writing a 0 has no effect.

6.2.8.168 eoi Register (Offset = 1020h) [reset = X]

eoi is shown in Figure 6-1541 and described in Table 6-1549.

Return to the Summary Table.

EOI register

Figure 6-1541. eoi Register

31	30	29	28	27	26	25	24	23	22	21	20	19	18	17	16
RESERVED															
R/W-X															
15	14	13	12	11	10	9	8	7	6	5	4	3	2	1	0
RESERVED								eoi_vector							
R/W-X								R/W-0h							

Table 6-1549. eoi Register Field Descriptions

Bit	Field	Type	Reset	Description
31-8	RESERVED	R/W	X	
7-0	eoi_vector	R/W	0h	EOI vector value. Write this with interrupt distribution value in the chip.

6.2.8.169 fault_address Register (Offset = 1024h) [reset = 0h]

fault_address is shown in Figure 6-1542 and described in Table 6-1550.

Return to the Summary Table.

Fault Address register

Figure 6-1542. fault_address Register

31	30	29	28	27	26	25	24	23	22	21	20	19	18	17	16	15	14	13	12	11	10	9	8	7	6	5	4	3	2	1	0
fault_addr																															
R-0h																															

Table 6-1550. fault_address Register Field Descriptions

Bit	Field	Type	Reset	Description
31-0	fault_addr	R	0h	Fault Address.

6.2.8.170 fault_type_status Register (Offset = 1028h) [reset = X]

fault_type_status is shown in Figure 6-1543 and described in Table 6-1551.

Copyright © 2025 Texas Instruments Incorporated

Return to the Summary Table.

Fault Type Status register

Figure 6-1543. fault_type_status Register

31	30	29	28	27	26	25	24
RESERVED							
R-X							
23	22	21	20	19	18	17	16
RESERVED							
R-X							
15	14	13	12	11	10	9	8
RESERVED							
R-X							
7	6	5	4	3	2	1	0
RESERVED	fault_ns	fault_type					
R-X	R-0h	R-0h					

Table 6-1551. fault_type_status Register Field Descriptions

Bit	Field	Type	Reset	Description
31-7	RESERVED	R	X	
6	fault_ns	R	0h	Non-secure access.
5-0	fault_type	R	0h	Fault Type 10_0000 = Supervisor read fault - priv = 1 dir = 1 dtype ! = 1 01_0000 = Supervisor write fault - priv = 1 dir = 0 00_1000 = Supervisor execute fault - priv = 1 dir = 1 dtype = 1 00_0100 = User read fault - priv = 0 dir = 1 dtype = 1 00_0010 = User write fault - priv = 0 dir = 0 00_0001 = User execute fault - priv = 0 dir = 1 dtype = 1 00_0000 = No fault

6.2.8.171 fault_attr_status Register (Offset = 102Ch) [reset = 0h]

fault_attr_status is shown in Figure 6-1544 and described in Table 6-1552.

Return to the Summary Table.

Fault Attribute Status register

Figure 6-1544. fault_attr_status Register

31	30	29	28	27	26	25	24	23	22	21	20	19	18	17	16
fault_xid												fault_routeid			
R-0h												R-0h			
15	14	13	12	11	10	9	8	7	6	5	4	3	2	1	0
fault_routeid								fault_privid							
R-0h								R-0h							

Table 6-1552. fault_attr_status Register Field Descriptions

Bit	Field	Type	Reset	Description
31-20	fault_xid	R	0h	XID.
19-8	fault_routeid	R	0h	Route ID.
7-0	fault_privid	R	0h	Privilege ID.

Copyright © 2025 Texas Instruments Incorporated

6.2.8.172 fault_clear Register (Offset = 1030h) [reset = X]

fault_clear is shown in Figure 6-1545 and described in Table 6-1553.

Return to the Summary Table.

Fault Clear register

Figure 6-1545. fault_clear Register

31	30	29	28	27	26	25	24
RESERVED							
W-X							
23	22	21	20	19	18	17	16
RESERVED							
W-X							
15	14	13	12	11	10	9	8
RESERVED							
W-X							
7	6	5	4	3	2	1	0
RESERVED							fault_clr
W-X							W-0h

Table 6-1553. fault_clear Register Field Descriptions

Bit	Field	Type	Reset	Description
31-1	RESERVED	W	X	
0	fault_clr	W	0h	Fault clear. Writing a 1 clears the current fault. Writing a 0 has no effect.

6.2.9 MSS_IOMUX Registers

lists the MSS_IOMUX registers. All register offset addresses not listed in should be considered as reserved locations and the register contents should not be modified.

Table 6-1554. MSS_IOMUX Registers

Offset	Acronym	Register Name	Section
0h	PADAA_cfg_reg		
4h	PADAB_cfg_reg		
8h	PADAC_cfg_reg		
Ch	PADAD_cfg_reg		
10h	PADAE_cfg_reg		
14h	PADAF_cfg_reg		
18h	PADAG_cfg_reg		
1Ch	PADAH_cfg_reg		
20h	PADAI_cfg_reg		
24h	PADAJ_cfg_reg		
28h	PADAK_cfg_reg		
2Ch	PADAL_cfg_reg		
30h	PADAM_cfg_reg		
34h	PADAN_cfg_reg		
38h	PADAO_cfg_reg		
3Ch	PADAP_cfg_reg		

Copyright © 2025 Texas Instruments Incorporated

Table 6-1554. MSS_IOMUX Registers (continued)

Offset	Acronym	Register Name	Section
40h	PADAQ_cfg_reg		
44h	PADAR_cfg_reg	OPen Drain Pad	
48h	PADAS_cfg_reg	OPen Drain Pad	
4Ch	PADAT_cfg_reg	OPen Drain Pad	
50h	PADAU_cfg_reg		
54h	PADAV_cfg_reg		
58h	PADAW_cfg_reg		
5Ch	PADAX_cfg_reg		
60h	PADAY_cfg_reg		
64h	PADAZ_cfg_reg		
68h	PADBA_cfg_reg		
6Ch	PADBB_cfg_reg		
70h	PADBC_cfg_reg		
74h	PADBD_cfg_reg		
78h	PADBE_cfg_reg		
7Ch	PADBF_cfg_reg		
80h	PADBG_cfg_reg		
84h	PADBH_cfg_reg		
88h	PADBI_cfg_reg		
8Ch	PADBJ_cfg_reg		
90h	PADBK_cfg_reg		
94h	PADBL_cfg_reg		
98h	PADBM_cfg_reg		
9Ch	PADBN_cfg_reg		
A0h	PADBO_cfg_reg		
A4h	PADBP_cfg_reg		
A8h	PADBQ_cfg_reg		
ACh	PADBR_cfg_reg		
B0h	PADBS_cfg_reg		
B4h	PADBT_cfg_reg		
B8h	PADBU_cfg_reg		
BCh	PADBV_cfg_reg		
C0h	PADBW_cfg_reg		
C4h	PADBX_cfg_reg		
C8h	PADBY_cfg_reg		
CCh	PADBZ_cfg_reg		
D0h	PADCA_cfg_reg		
D4h	PADCB_cfg_reg		
D8h	PADCC_cfg_reg		
DCh	PADCD_cfg_reg		
E0h	PADCE_cfg_reg		
E4h	PADCF_cfg_reg		
E8h	PADCG_cfg_reg		
ECh	PADCH_cfg_reg		
F0h	PADCI_cfg_reg		

Copyright © 2025 Texas Instruments Incorporated

Table 6-1554. MSS_IOMUX Registers (continued)

Offset	Acronym	Register Name	Section
F4h	PADCJ_cfg_reg		
F8h	PADCK_cfg_reg		
FCh	PADCL_cfg_reg		
100h	PADCM_cfg_reg		
104h	PADCN_cfg_reg		
108h	PADCO_cfg_reg		
10Ch	PADCP_cfg_reg		
110h	PADCQ_cfg_reg		
114h	PADCR_cfg_reg		
118h	PADCS_cfg_reg		
11Ch	PADCT_cfg_reg		
120h	PADCU_cfg_reg		
124h	PADCV_cfg_reg		
128h	PADCW_cfg_reg		
12Ch	PADCX_cfg_reg		
130h	PADCY_cfg_reg		
134h	PADCZ_cfg_reg		
138h	PADDA_cfg_reg		
13Ch	PADDB_cfg_reg		
140h	PADDC_cfg_reg		
144h	PADDD_cfg_reg		
148h	PADDE_cfg_reg		
14Ch	PADDF_cfg_reg		
150h	PADDG_cfg_reg		
154h	PADDH_cfg_reg		
158h	PADDI_cfg_reg		
15Ch	PADDJ_cfg_reg		
160h	PADDK_cfg_reg		
164h	PADDL_cfg_reg		
168h	PADDM_cfg_reg		
16Ch	PADDN_cfg_reg		
170h	PADDO_cfg_reg		
174h	PADDP_cfg_reg		
178h	PADDQ_cfg_reg		
17Ch	PADDR_cfg_reg		
180h	PADDS_cfg_reg		
184h	PADDT_cfg_reg		
188h	PADDU_cfg_reg		
18Ch	PADDV_cfg_reg		
190h	PADDW_cfg_reg		
194h	PADDX_cfg_reg		
198h	PADDY_cfg_reg		
19Ch	PADDZ_cfg_reg		
1A0h	PADEA_cfg_reg		
1A4h	PADEB_cfg_reg		

Copyright © 2025 Texas Instruments Incorporated

Table 6-1554. MSS_IOMUX Registers (continued)

Offset	Acronym	Register Name	Section
1A8h	PADEC_cfg_reg		
1ACh	PADED_cfg_reg		
1B0h	PADEE_cfg_reg		
1B4h	PADEF_cfg_reg		
1B8h	PADEG_cfg_reg		
1BCh	PADEH_cfg_reg		
1C0h	PADEI_cfg_reg		
1C4h	PADEJ_cfg_reg		
1C8h	PADEK_cfg_reg		
1CCh	PADEL_cfg_reg		
1D0h	PADEM_cfg_reg		
1D4h	PADEN_cfg_reg		
1D8h	PADEO_cfg_reg		
1DCh	PADEP_cfg_reg		
1F0h	USERMODEEN		
1F4h	PADGLBLCFGREG		
1F8h	IOCFGKICK0		
1FCh	IOCFGKICK1		

6.2.9.1 PADAA_cfg_reg Register (Offset = 0h) [reset = C1h]

PADAA_cfg_reg is shown in and described in .

Return to the Summary Table.

Figure 6-1546. PADAA_cfg_reg Register

31	30	29	28	27	26	25	24
NU							
R/W-0h							
23	22	21	20	19	18	17	16
NU							
R/W-0h							
15	14	13	12	11	10	9	8
NU					sc1	pupdsel	pi
R/W-0h					R/W-0h	R/W-0h	R/W-0h
7	6	5	4	3	2	1	0
oe_override	oe_override_ctrl	ie_override	ie_override_ctrl	func_sel			
R/W-1h	R/W-1h	R/W-0h	R/W-0h	R/W-1h			

Table 6-1555. PADAA_cfg_reg Register Field Descriptions

Bit	Field	Type	Reset	Description
31-11	NU	R/W	0h	Reserved
10	sc1	R/W	0h	IO Slew rate control : 0 : higher slew rate. 1: Lower slew rate.
9	pupdsel	R/W	0h	Pullup/PullDown Selection 0 -- Pull Down
8	pi	R/W	0h	Pull Enable/Pull Disable 0 -- Enable
7	oe_override	R/W	1h	Active Low Output Override

Copyright © 2025 Texas Instruments Incorporated

Table 6-1555. PADAA_cfg_reg Register Field Descriptions (continued)

Bit	Field	Type	Reset	Description
6	oe_override_ctrl	R/W	1h	Active Low Output Override Control : Write 1 to select Active low Output Override value to control IOs OE_N/GZ instead of the control from hardware
5	ie_override	R/W	0h	Active Low Input Override
4	ie_override_ctrl	R/W	0h	Active Low Input Override Control : Write 1 to select Active low Input Override value to control IOs IE_N/RXACTIVE_N instead of the control from hardware
3-0	func_sel	R/W	1h	Function select

6.2.9.2 PADAB_cfg_reg Register (Offset = 4h) [reset = C1h]

PADAB_cfg_reg is shown in and described in .

Return to the Summary Table.

Figure 6-1547. PADAB_cfg_reg Register

31	30	29	28	27	26	25	24
NU							
R/W-0h							
23	22	21	20	19	18	17	16
NU							
R/W-0h							
15	14	13	12	11	10	9	8
NU					sc1	pupdsel	pi
R/W-0h					R/W-0h	R/W-0h	R/W-0h
7	6	5	4	3	2	1	0
oe_override	oe_override_ctrl	ie_override	ie_override_ctrl	func_sel			
R/W-1h	R/W-1h	R/W-0h	R/W-0h	R/W-1h			

Table 6-1556. PADAB_cfg_reg Register Field Descriptions

Bit	Field	Type	Reset	Description
31-11	NU	R/W	0h	Reserved
10	sc1	R/W	0h	IO Slew rate control : 0 : higher slew rate. 1: Lower slew rate.
9	pupdsel	R/W	0h	Pullup/PullDown Selection 0 -- Pull Down
8	pi	R/W	0h	Pull Enable/Pull Disable 0 -- Enable
7	oe_override	R/W	1h	Active Low Output Override
6	oe_override_ctrl	R/W	1h	Active Low Output Override Control : Write 1 to select Active low Output Override value to control IOs OE_N/GZ instead of the control from hardware
5	ie_override	R/W	0h	Active Low Input Override
4	ie_override_ctrl	R/W	0h	Active Low Input Override Control : Write 1 to select Active low Input Override value to control IOs IE_N/RXACTIVE_N instead of the control from hardware
3-0	func_sel	R/W	1h	Function select

6.2.9.3 PADAC_cfg_reg Register (Offset = 8h) [reset = C1h]

PADAC_cfg_reg is shown in and described in .

Copyright © 2025 Texas Instruments Incorporated

Return to the Summary Table.

Figure 6-1548. PADAC_cfg_reg Register

31	30	29	28	27	26	25	24
NU							
R/W-0h							
23	22	21	20	19	18	17	16
NU							
R/W-0h							
15	14	13	12	11	10	9	8
NU					sc1	pupdsel	pi
R/W-0h					R/W-0h	R/W-0h	R/W-0h
7	6	5	4	3	2	1	0
oe_override	oe_override_ctrl	ie_override	ie_override_ctrl	func_sel			
R/W-1h	R/W-1h	R/W-0h	R/W-0h	R/W-1h			

Table 6-1557. PADAC_cfg_reg Register Field Descriptions

Bit	Field	Type	Reset	Description
31-11	NU	R/W	0h	Reserved
10	sc1	R/W	0h	IO Slew rate control : 0 : higher slew rate. 1: Lower slew rate.
9	pupdsel	R/W	0h	Pullup/PullDown Selection 0 -- Pull Down
8	pi	R/W	0h	Pull Enable/Pull Disable 0 -- Enable
7	oe_override	R/W	1h	Active Low Output Override
6	oe_override_ctrl	R/W	1h	Active Low Output Override Control : Write 1 to select Active low Output Override value to control IOs OE_N/GZ instead of the control from hardware
5	ie_override	R/W	0h	Active Low Input Override
4	ie_override_ctrl	R/W	0h	Active Low Input Override Control : Write 1 to select Active low Input Override value to control IOs IE_N/RXACTIVE_N instead of the control from hardware
3-0	func_sel	R/W	1h	Function select

6.2.9.4 PADAD_cfg_reg Register (Offset = Ch) [reset = 2C1h]

PADAD_cfg_reg is shown in and described in .

Return to the Summary Table.

Figure 6-1549. PADAD_cfg_reg Register

31	30	29	28	27	26	25	24
NU							
R/W-0h							
23	22	21	20	19	18	17	16
NU							
R/W-0h							
15	14	13	12	11	10	9	8
NU					sc1	pupdsel	pi
R/W-0h					R/W-0h	R/W-1h	R/W-0h

Copyright © 2025 Texas Instruments Incorporated

Figure 6-1549. PADAD_cfg_reg Register (continued)

7	6	5	4	3	2	1	0
oe_override	oe_override_ctrl	ie_override	ie_override_ctrl	func_sel			
R/W-1h	R/W-1h	R/W-0h	R/W-0h	R/W-1h			

Table 6-1558. PADAD_cfg_reg Register Field Descriptions

Bit	Field	Type	Reset	Description
31-11	NU	R/W	0h	Reserved
10	sc1	R/W	0h	IO Slew rate control : 0 : higher slew rate. 1: Lower slew rate.
9	pupdsel	R/W	1h	Pullup/PullDown Selection 0 -- Pull Down
8	pi	R/W	0h	Pull Enable/Pull Disable 0 -- Enable
7	oe_override	R/W	1h	Active Low Output Override
6	oe_override_ctrl	R/W	1h	Active Low Output Override Control : Write 1 to select Active low Output Override value to control IOs OE_N/GZ instead of the control from hardware
5	ie_override	R/W	0h	Active Low Input Override
4	ie_override_ctrl	R/W	0h	Active Low Input Override Control : Write 1 to select Active low Input Override value to control IOs IE_N/RXACTIVE_N instead of the control from hardware
3-0	func_sel	R/W	1h	Function select

6.2.9.5 PADAE_cfg_reg Register (Offset = 10h) [reset = 2C1h]

PADAE_cfg_reg is shown in and described in .

Return to the Summary Table.

Figure 6-1550. PADAE_cfg_reg Register

31	30	29	28	27	26	25	24
NU							
R/W-0h							
23	22	21	20	19	18	17	16
NU							
R/W-0h							
15	14	13	12	11	10	9	8
NU					sc1	pupdsel	pi
R/W-0h					R/W-0h	R/W-1h	R/W-0h
7	6	5	4	3	2	1	0
oe_override	oe_override_ctrl	ie_override	ie_override_ctrl	func_sel			
R/W-1h	R/W-1h	R/W-0h	R/W-0h	R/W-1h			

Table 6-1559. PADAE_cfg_reg Register Field Descriptions

Bit	Field	Type	Reset	Description
31-11	NU	R/W	0h	Reserved
10	sc1	R/W	0h	IO Slew rate control : 0 : higher slew rate. 1: Lower slew rate.
9	pupdsel	R/W	1h	Pullup/PullDown Selection 0 -- Pull Down
8	pi	R/W	0h	Pull Enable/Pull Disable 0 -- Enable
7	oe_override	R/W	1h	Active Low Output Override

Copyright © 2025 Texas Instruments Incorporated

Table 6-1559. PADAE_cfg_reg Register Field Descriptions (continued)

Bit	Field	Type	Reset	Description
6	oe_override_ctrl	R/W	1h	Active Low Output Override Control : Write 1 to select Active low Output Override value to control IOs OE_N/GZ instead of the control from hardware
5	ie_override	R/W	0h	Active Low Input Override
4	ie_override_ctrl	R/W	0h	Active Low Input Override Control : Write 1 to select Active low Input Override value to control IOs IE_N/RXACTIVE_N instead of the control from hardware
3-0	func_sel	R/W	1h	Function select

6.2.9.6 PADAF_cfg_reg Register (Offset = 14h) [reset = 2C1h]

PADAF_cfg_reg is shown in and described in .

Return to the Summary Table.

Figure 6-1551. PADAF_cfg_reg Register

31	30	29	28	27	26	25	24
NU							
R/W-0h							
23	22	21	20	19	18	17	16
NU							
R/W-0h							
15	14	13	12	11	10	9	8
NU					sc1	pupdsel	pi
R/W-0h					R/W-0h	R/W-1h	R/W-0h
7	6	5	4	3	2	1	0
oe_override	oe_override_ctrl	ie_override	ie_override_ctrl	func_sel			
R/W-1h	R/W-1h	R/W-0h	R/W-0h	R/W-1h			

Table 6-1560. PADAF_cfg_reg Register Field Descriptions

Bit	Field	Type	Reset	Description
31-11	NU	R/W	0h	Reserved
10	sc1	R/W	0h	IO Slew rate control : 0 : higher slew rate. 1: Lower slew rate.
9	pupdsel	R/W	1h	Pullup/PullDown Selection 0 -- Pull Down
8	pi	R/W	0h	Pull Enable/Pull Disable 0 -- Enable
7	oe_override	R/W	1h	Active Low Output Override
6	oe_override_ctrl	R/W	1h	Active Low Output Override Control : Write 1 to select Active low Output Override value to control IOs OE_N/GZ instead of the control from hardware
5	ie_override	R/W	0h	Active Low Input Override
4	ie_override_ctrl	R/W	0h	Active Low Input Override Control : Write 1 to select Active low Input Override value to control IOs IE_N/RXACTIVE_N instead of the control from hardware
3-0	func_sel	R/W	1h	Function select

6.2.9.7 PADAG_cfg_reg Register (Offset = 18h) [reset = 2C1h]

PADAG_cfg_reg is shown in and described in .

Copyright © 2025 Texas Instruments Incorporated

Return to the Summary Table.

Figure 6-1552. PADAG_cfg_reg Register

31	30	29	28	27	26	25	24
NU							
R/W-0h							
23	22	21	20	19	18	17	16
NU							
R/W-0h							
15	14	13	12	11	10	9	8
NU					sc1	pupdsel	pi
R/W-0h					R/W-0h	R/W-1h	R/W-0h
7	6	5	4	3	2	1	0
oe_override	oe_override_ctrl	ie_override	ie_override_ctrl	func_sel			
R/W-1h	R/W-1h	R/W-0h	R/W-0h	R/W-1h			

Table 6-1561. PADAG_cfg_reg Register Field Descriptions

Bit	Field	Type	Reset	Description
31-11	NU	R/W	0h	Reserved
10	sc1	R/W	0h	IO Slew rate control : 0 : higher slew rate. 1: Lower slew rate.
9	pupdsel	R/W	1h	Pullup/PullDown Selection 0 -- Pull Down
8	pi	R/W	0h	Pull Enable/Pull Disable 0 -- Enable
7	oe_override	R/W	1h	Active Low Output Override
6	oe_override_ctrl	R/W	1h	Active Low Output Override Control : Write 1 to select Active low Output Override value to control IOs OE_N/GZ instead of the control from hardware
5	ie_override	R/W	0h	Active Low Input Override
4	ie_override_ctrl	R/W	0h	Active Low Input Override Control : Write 1 to select Active low Input Override value to control IOs IE_N/RXACTIVE_N instead of the control from hardware
3-0	func_sel	R/W	1h	Function select

6.2.9.8 PADAH_cfg_reg Register (Offset = 1Ch) [reset = 2C1h]

PADAH_cfg_reg is shown in and described in .

Return to the Summary Table.

Figure 6-1553. PADAH_cfg_reg Register

31	30	29	28	27	26	25	24
NU							
R/W-0h							
23	22	21	20	19	18	17	16
NU							
R/W-0h							
15	14	13	12	11	10	9	8
NU					sc1	pupdsel	pi
R/W-0h					R/W-0h	R/W-1h	R/W-0h

Copyright © 2025 Texas Instruments Incorporated

Figure 6-1553. PADAH_cfg_reg Register (continued)

7	6	5	4	3	2	1	0
oe_override	oe_override_ctrl	ie_override	ie_override_ctrl	func_sel			
R/W-1h	R/W-1h	R/W-0h	R/W-0h	R/W-1h			

Table 6-1562. PADAH_cfg_reg Register Field Descriptions

Bit	Field	Type	Reset	Description
31-11	NU	R/W	0h	Reserved
10	sc1	R/W	0h	IO Slew rate control : 0 : higher slew rate. 1: Lower slew rate.
9	pupdsel	R/W	1h	Pullup/PullDown Selection 0 -- Pull Down
8	pi	R/W	0h	Pull Enable/Pull Disable 0 -- Enable
7	oe_override	R/W	1h	Active Low Output Override
6	oe_override_ctrl	R/W	1h	Active Low Output Override Control : Write 1 to select Active low Output Override value to control IOs OE_N/GZ instead of the control from hardware
5	ie_override	R/W	0h	Active Low Input Override
4	ie_override_ctrl	R/W	0h	Active Low Input Override Control : Write 1 to select Active low Input Override value to control IOs IE_N/RXACTIVE_N instead of the control from hardware
3-0	func_sel	R/W	1h	Function select

6.2.9.9 PADAI_cfg_reg Register (Offset = 20h) [reset = 2C1h]

PADAI_cfg_reg is shown in and described in .

Return to the Summary Table.

Figure 6-1554. PADAI_cfg_reg Register

31	30	29	28	27	26	25	24
NU							
R/W-0h							
23	22	21	20	19	18	17	16
NU							
R/W-0h							
15	14	13	12	11	10	9	8
NU					sc1	pupdsel	pi
R/W-0h					R/W-0h	R/W-1h	R/W-0h
7	6	5	4	3	2	1	0
oe_override	oe_override_ctrl	ie_override	ie_override_ctrl	func_sel			
R/W-1h	R/W-1h	R/W-0h	R/W-0h	R/W-1h			

Table 6-1563. PADAI_cfg_reg Register Field Descriptions

Bit	Field	Type	Reset	Description
31-11	NU	R/W	0h	Reserved
10	sc1	R/W	0h	IO Slew rate control : 0 : higher slew rate. 1: Lower slew rate.
9	pupdsel	R/W	1h	Pullup/PullDown Selection 0 -- Pull Down
8	pi	R/W	0h	Pull Enable/Pull Disable 0 -- Enable
7	oe_override	R/W	1h	Active Low Output Override

Copyright © 2025 Texas Instruments Incorporated

Table 6-1563. PADAI_cfg_reg Register Field Descriptions (continued)

Bit	Field	Type	Reset	Description
6	oe_override_ctrl	R/W	1h	Active Low Output Override Control : Write 1 to select Active low Output Override value to control IOs OE_N/GZ instead of the control from hardware
5	ie_override	R/W	0h	Active Low Input Override
4	ie_override_ctrl	R/W	0h	Active Low Input Override Control : Write 1 to select Active low Input Override value to control IOs IE_N/RXACTIVE_N instead of the control from hardware
3-0	func_sel	R/W	1h	Function select

6.2.9.10 PADAJ_cfg_reg Register (Offset = 24h) [reset = 2C1h]

PADAJ_cfg_reg is shown in and described in .

Return to the Summary Table.

Figure 6-1555. PADAJ_cfg_reg Register

31	30	29	28	27	26	25	24
NU							
R/W-0h							
23	22	21	20	19	18	17	16
NU							
R/W-0h							
15	14	13	12	11	10	9	8
NU					sc1	pupdsel	pi
R/W-0h					R/W-0h	R/W-1h	R/W-0h
7	6	5	4	3	2	1	0
oe_override	oe_override_ctrl	ie_override	ie_override_ctrl	func_sel			
R/W-1h	R/W-1h	R/W-0h	R/W-0h	R/W-1h			

Table 6-1564. PADAJ_cfg_reg Register Field Descriptions

Bit	Field	Type	Reset	Description
31-11	NU	R/W	0h	Reserved
10	sc1	R/W	0h	IO Slew rate control : 0 : higher slew rate. 1: Lower slew rate.
9	pupdsel	R/W	1h	Pullup/PullDown Selection 0 -- Pull Down
8	pi	R/W	0h	Pull Enable/Pull Disable 0 -- Enable
7	oe_override	R/W	1h	Active Low Output Override
6	oe_override_ctrl	R/W	1h	Active Low Output Override Control : Write 1 to select Active low Output Override value to control IOs OE_N/GZ instead of the control from hardware
5	ie_override	R/W	0h	Active Low Input Override
4	ie_override_ctrl	R/W	0h	Active Low Input Override Control : Write 1 to select Active low Input Override value to control IOs IE_N/RXACTIVE_N instead of the control from hardware
3-0	func_sel	R/W	1h	Function select

6.2.9.11 PADAK_cfg_reg Register (Offset = 28h) [reset = 2C1h]

PADAK_cfg_reg is shown in and described in .

Copyright © 2025 Texas Instruments Incorporated

Return to the Summary Table.

Figure 6-1556. PADAK_cfg_reg Register

31	30	29	28	27	26	25	24
NU							
R/W-0h							
23	22	21	20	19	18	17	16
NU							
R/W-0h							
15	14	13	12	11	10	9	8
NU					sc1	pupdsel	pi
R/W-0h					R/W-0h	R/W-1h	R/W-0h
7	6	5	4	3	2	1	0
oe_override	oe_override_ctrl	ie_override	ie_override_ctrl	func_sel			
R/W-1h	R/W-1h	R/W-0h	R/W-0h	R/W-1h			

Table 6-1565. PADAK_cfg_reg Register Field Descriptions

Bit	Field	Type	Reset	Description
31-11	NU	R/W	0h	Reserved
10	sc1	R/W	0h	IO Slew rate control : 0 : higher slew rate. 1: Lower slew rate.
9	pupdsel	R/W	1h	Pullup/PullDown Selection 0 -- Pull Down
8	pi	R/W	0h	Pull Enable/Pull Disable 0 -- Enable
7	oe_override	R/W	1h	Active Low Output Override
6	oe_override_ctrl	R/W	1h	Active Low Output Override Control : Write 1 to select Active low Output Override value to control IOs OE_N/GZ instead of the control from hardware
5	ie_override	R/W	0h	Active Low Input Override
4	ie_override_ctrl	R/W	0h	Active Low Input Override Control : Write 1 to select Active low Input Override value to control IOs IE_N/RXACTIVE_N instead of the control from hardware
3-0	func_sel	R/W	1h	Function select

6.2.9.12 PADAL_cfg_reg Register (Offset = 2Ch) [reset = C1h]

PADAL_cfg_reg is shown in and described in .

Return to the Summary Table.

Figure 6-1557. PADAL_cfg_reg Register

31	30	29	28	27	26	25	24
NU							
R/W-0h							
23	22	21	20	19	18	17	16
NU							
R/W-0h							
15	14	13	12	11	10	9	8
NU					sc1	pupdsel	pi
R/W-0h					R/W-0h	R/W-0h	R/W-0h

Copyright © 2025 Texas Instruments Incorporated

Figure 6-1557. PADAL_cfg_reg Register (continued)

7	6	5	4	3	2	1	0
oe_override	oe_override_ctrl	ie_override	ie_override_ctrl	func_sel			
R/W-1h	R/W-1h	R/W-0h	R/W-0h	R/W-1h			

Table 6-1566. PADAL_cfg_reg Register Field Descriptions

Bit	Field	Type	Reset	Description
31-11	NU	R/W	0h	Reserved
10	sc1	R/W	0h	IO Slew rate control : 0 : higher slew rate. 1: Lower slew rate.
9	pupdsel	R/W	0h	Pullup/PullDown Selection 0 -- Pull Down
8	pi	R/W	0h	Pull Enable/Pull Disable 0 -- Enable
7	oe_override	R/W	1h	Active Low Output Override
6	oe_override_ctrl	R/W	1h	Active Low Output Override Control : Write 1 to select Active low Output Override value to control IOs OE_N/GZ instead of the control from hardware
5	ie_override	R/W	0h	Active Low Input Override
4	ie_override_ctrl	R/W	0h	Active Low Input Override Control : Write 1 to select Active low Input Override value to control IOs IE_N/RXACTIVE_N instead of the control from hardware
3-0	func_sel	R/W	1h	Function select

6.2.9.13 PADAM_cfg_reg Register (Offset = 30h) [reset = C1h]

PADAM_cfg_reg is shown in and described in .

Return to the Summary Table.

Figure 6-1558. PADAM_cfg_reg Register

31	30	29	28	27	26	25	24
NU							
R/W-0h							
23	22	21	20	19	18	17	16
NU							
R/W-0h							
15	14	13	12	11	10	9	8
NU					sc1	pupdsel	pi
R/W-0h					R/W-0h	R/W-0h	R/W-0h
7	6	5	4	3	2	1	0
oe_override	oe_override_ctrl	ie_override	ie_override_ctrl	func_sel			
R/W-1h	R/W-1h	R/W-0h	R/W-0h	R/W-1h			

Table 6-1567. PADAM_cfg_reg Register Field Descriptions

Bit	Field	Type	Reset	Description
31-11	NU	R/W	0h	Reserved
10	sc1	R/W	0h	IO Slew rate control : 0 : higher slew rate. 1: Lower slew rate.
9	pupdsel	R/W	0h	Pullup/PullDown Selection 0 -- Pull Down
8	pi	R/W	0h	Pull Enable/Pull Disable 0 -- Enable
7	oe_override	R/W	1h	Active Low Output Override

Copyright © 2025 Texas Instruments Incorporated

Table 6-1567. PADAM_cfg_reg Register Field Descriptions (continued)

Bit	Field	Type	Reset	Description
6	oe_override_ctrl	R/W	1h	Active Low Output Override Control : Write 1 to select Active low Output Override value to control IOs OE_N/GZ instead of the control from hardware
5	ie_override	R/W	0h	Active Low Input Override
4	ie_override_ctrl	R/W	0h	Active Low Input Override Control : Write 1 to select Active low Input Override value to control IOs IE_N/RXACTIVE_N instead of the control from hardware
3-0	func_sel	R/W	1h	Function select

6.2.9.14 PADAN_cfg_reg Register (Offset = 34h) [reset = 2C1h]

PADAN_cfg_reg is shown in and described in .

Return to the Summary Table.

Figure 6-1559. PADAN_cfg_reg Register

31	30	29	28	27	26	25	24
NU							
R/W-0h							
23	22	21	20	19	18	17	16
NU							
R/W-0h							
15	14	13	12	11	10	9	8
NU					sc1	pupdsel	pi
R/W-0h					R/W-0h	R/W-1h	R/W-0h
7	6	5	4	3	2	1	0
oe_override	oe_override_ctrl	ie_override	ie_override_ctrl	func_sel			
R/W-1h	R/W-1h	R/W-0h	R/W-0h	R/W-1h			

Table 6-1568. PADAN_cfg_reg Register Field Descriptions

Bit	Field	Type	Reset	Description
31-11	NU	R/W	0h	Reserved
10	sc1	R/W	0h	IO Slew rate control : 0 : higher slew rate. 1: Lower slew rate.
9	pupdsel	R/W	1h	Pullup/PullDown Selection 0 -- Pull Down
8	pi	R/W	0h	Pull Enable/Pull Disable 0 -- Enable
7	oe_override	R/W	1h	Active Low Output Override
6	oe_override_ctrl	R/W	1h	Active Low Output Override Control : Write 1 to select Active low Output Override value to control IOs OE_N/GZ instead of the control from hardware
5	ie_override	R/W	0h	Active Low Input Override
4	ie_override_ctrl	R/W	0h	Active Low Input Override Control : Write 1 to select Active low Input Override value to control IOs IE_N/RXACTIVE_N instead of the control from hardware
3-0	func_sel	R/W	1h	Function select

6.2.9.15 PADAO_cfg_reg Register (Offset = 38h) [reset = 2C1h]

PADAO_cfg_reg is shown in and described in .

Copyright © 2025 Texas Instruments Incorporated

Return to the Summary Table.

Figure 6-1560. PADAO_cfg_reg Register

31	30	29	28	27	26	25	24
NU							
R/W-0h							
23	22	21	20	19	18	17	16
NU							
R/W-0h							
15	14	13	12	11	10	9	8
NU					sc1	pupdsel	pi
R/W-0h					R/W-0h	R/W-1h	R/W-0h
7	6	5	4	3	2	1	0
oe_override	oe_override_ctrl	ie_override	ie_override_ctrl	func_sel			
R/W-1h	R/W-1h	R/W-0h	R/W-0h	R/W-1h			

Table 6-1569. PADAO_cfg_reg Register Field Descriptions

Bit	Field	Type	Reset	Description
31-11	NU	R/W	0h	Reserved
10	sc1	R/W	0h	IO Slew rate control : 0 : higher slew rate. 1: Lower slew rate.
9	pupdsel	R/W	1h	Pullup/PullDown Selection 0 -- Pull Down
8	pi	R/W	0h	Pull Enable/Pull Disable 0 -- Enable
7	oe_override	R/W	1h	Active Low Output Override
6	oe_override_ctrl	R/W	1h	Active Low Output Override Control : Write 1 to select Active low Output Override value to control IOs OE_N/GZ instead of the control from hardware
5	ie_override	R/W	0h	Active Low Input Override
4	ie_override_ctrl	R/W	0h	Active Low Input Override Control : Write 1 to select Active low Input Override value to control IOs IE_N/RXACTIVE_N instead of the control from hardware
3-0	func_sel	R/W	1h	Function select

6.2.9.16 PADAP_cfg_reg Register (Offset = 3Ch) [reset = C1h]

PADAP_cfg_reg is shown in and described in .

Return to the Summary Table.

Figure 6-1561. PADAP_cfg_reg Register

31	30	29	28	27	26	25	24
NU							
R/W-0h							
23	22	21	20	19	18	17	16
NU							
R/W-0h							
15	14	13	12	11	10	9	8
NU					sc1	pupdsel	pi
R/W-0h					R/W-0h	R/W-0h	R/W-0h

Copyright © 2025 Texas Instruments Incorporated

Figure 6-1561. PADAP_cfg_reg Register (continued)

7	6	5	4	3	2	1	0
oe_override	oe_override_ctrl	ie_override	ie_override_ctrl	func_sel			
R/W-1h	R/W-1h	R/W-0h	R/W-0h	R/W-1h			

Table 6-1570. PADAP_cfg_reg Register Field Descriptions

Bit	Field	Type	Reset	Description
31-11	NU	R/W	0h	Reserved
10	sc1	R/W	0h	IO Slew rate control : 0 : higher slew rate. 1: Lower slew rate.
9	pupdsel	R/W	0h	Pullup/PullDown Selection 0 -- Pull Down
8	pi	R/W	0h	Pull Enable/Pull Disable 0 -- Enable
7	oe_override	R/W	1h	Active Low Output Override
6	oe_override_ctrl	R/W	1h	Active Low Output Override Control : Write 1 to select Active low Output Override value to control IOs OE_N/GZ instead of the control from hardware
5	ie_override	R/W	0h	Active Low Input Override
4	ie_override_ctrl	R/W	0h	Active Low Input Override Control : Write 1 to select Active low Input Override value to control IOs IE_N/RXACTIVE_N instead of the control from hardware
3-0	func_sel	R/W	1h	Function select

6.2.9.17 PADAQ_cfg_reg Register (Offset = 40h) [reset = 2C1h]

PADAQ_cfg_reg is shown in and described in .

Return to the Summary Table.

Figure 6-1562. PADAQ_cfg_reg Register

31	30	29	28	27	26	25	24
NU							
R/W-0h							
23	22	21	20	19	18	17	16
NU							
R/W-0h							
15	14	13	12	11	10	9	8
NU					sc1	pupdsel	pi
R/W-0h					R/W-0h	R/W-1h	R/W-0h
7	6	5	4	3	2	1	0
oe_override	oe_override_ctrl	ie_override	ie_override_ctrl	func_sel			
R/W-1h	R/W-1h	R/W-0h	R/W-0h	R/W-1h			

Table 6-1571. PADAQ_cfg_reg Register Field Descriptions

Bit	Field	Type	Reset	Description
31-11	NU	R/W	0h	Reserved
10	sc1	R/W	0h	IO Slew rate control : 0 : higher slew rate. 1: Lower slew rate.
9	pupdsel	R/W	1h	Pullup/PullDown Selection 0 -- Pull Down
8	pi	R/W	0h	Pull Enable/Pull Disable 0 -- Enable
7	oe_override	R/W	1h	Active Low Output Override

Copyright © 2025 Texas Instruments Incorporated

Table 6-1571. PADAQ_cfg_reg Register Field Descriptions (continued)

Bit	Field	Type	Reset	Description
6	oe_override_ctrl	R/W	1h	Active Low Output Override Control : Write 1 to select Active low Output Override value to control IOs OE_N/GZ instead of the control from hardware
5	ie_override	R/W	0h	Active Low Input Override
4	ie_override_ctrl	R/W	0h	Active Low Input Override Control : Write 1 to select Active low Input Override value to control IOs IE_N/RXACTIVE_N instead of the control from hardware
3-0	func_sel	R/W	1h	Function select

6.2.9.18 PADAR_cfg_reg Register (Offset = 44h) [reset = 100h]

PADAR_cfg_reg is shown in and described in .

Return to the Summary Table.

Figure 6-1563. PADAR_cfg_reg Register

31	30	29	28	27	26	25	24
NU							
R/W-0h							
23	22	21	20	19	18	17	16
NU							
R/W-0h							
15	14	13	12	11	10	9	8
NU					sc1	pupdsel	pi
R/W-0h					R/W-0h	R/W-0h	R/W-1h
7	6	5	4	3	2	1	0
oe_override	oe_override_ctrl	ie_override	ie_override_ctrl	func_sel			
R/W-0h	R/W-0h	R/W-0h	R/W-0h	R/W-0h			

Table 6-1572. PADAR_cfg_reg Register Field Descriptions

Bit	Field	Type	Reset	Description
31-11	NU	R/W	0h	Reserved
10	sc1	R/W	0h	IO Slew rate control : 0 : higher slew rate. 1: Lower slew rate.
9	pupdsel	R/W	0h	Pullup/PullDown Selection 0 -- Pull Down
8	pi	R/W	1h	Pull Enable/Pull Disable 0 -- Enable
7	oe_override	R/W	0h	Active Low Output Override
6	oe_override_ctrl	R/W	0h	Active Low Output Override Control : Write 1 to select Active low Output Override value to control IOs OE_N/GZ instead of the control from hardware
5	ie_override	R/W	0h	Active Low Input Override
4	ie_override_ctrl	R/W	0h	Active Low Input Override Control : Write 1 to select Active low Input Override value to control IOs IE_N/RXACTIVE_N instead of the control from hardware
3-0	func_sel	R/W	0h	Function select

6.2.9.19 PADAS_cfg_reg Register (Offset = 48h) [reset = 100h]

PADAS_cfg_reg is shown in and described in .

Copyright © 2025 Texas Instruments Incorporated

Return to the Summary Table.

Figure 6-1564. PADAS_cfg_reg Register

31	30	29	28	27	26	25	24
NU							
R/W-0h							
23	22	21	20	19	18	17	16
NU							
R/W-0h							
15	14	13	12	11	10	9	8
NU					sc1	pupdsel	pi
R/W-0h					R/W-0h	R/W-0h	R/W-1h
7	6	5	4	3	2	1	0
oe_override	oe_override_ctrl	ie_override	ie_override_ctrl	func_sel			
R/W-0h	R/W-0h	R/W-0h	R/W-0h	R/W-0h			

Table 6-1573. PADAS_cfg_reg Register Field Descriptions

Bit	Field	Type	Reset	Description
31-11	NU	R/W	0h	Reserved
10	sc1	R/W	0h	IO Slew rate control : 0 : higher slew rate. 1: Lower slew rate.
9	pupdsel	R/W	0h	Pullup/PullDown Selection 0 -- Pull Down
8	pi	R/W	1h	Pull Enable/Pull Disable 0 -- Enable
7	oe_override	R/W	0h	Active Low Output Override
6	oe_override_ctrl	R/W	0h	Active Low Output Override Control : Write 1 to select Active low Output Override value to control IOs OE_N/GZ instead of the control from hardware
5	ie_override	R/W	0h	Active Low Input Override
4	ie_override_ctrl	R/W	0h	Active Low Input Override Control : Write 1 to select Active low Input Override value to control IOs IE_N/RXACTIVE_N instead of the control from hardware
3-0	func_sel	R/W	0h	Function select

6.2.9.20 PADAT_cfg_reg Register (Offset = 4Ch) [reset = 100h]

PADAT_cfg_reg is shown in and described in .

Return to the Summary Table.

Figure 6-1565. PADAT_cfg_reg Register

31	30	29	28	27	26	25	24
NU							
R/W-0h							
23	22	21	20	19	18	17	16
NU							
R/W-0h							
15	14	13	12	11	10	9	8
NU					sc1	pupdsel	pi
R/W-0h					R/W-0h	R/W-0h	R/W-1h

Copyright © 2025 Texas Instruments Incorporated

Figure 6-1565. PADAT_cfg_reg Register (continued)

7	6	5	4	3	2	1	0
oe_override	oe_override_ctrl	ie_override	ie_override_ctrl	func_sel			
R/W-0h	R/W-0h	R/W-0h	R/W-0h	R/W-0h			

Table 6-1574. PADAT_cfg_reg Register Field Descriptions

Bit	Field	Type	Reset	Description
31-11	NU	R/W	0h	Reserved
10	sc1	R/W	0h	IO Slew rate control : 0 : higher slew rate. 1: Lower slew rate.
9	pupdsel	R/W	0h	Pullup/PullDown Selection 0 -- Pull Down
8	pi	R/W	1h	Pull Enable/Pull Disable 0 -- Enable
7	oe_override	R/W	0h	Active Low Output Override
6	oe_override_ctrl	R/W	0h	Active Low Output Override Control : Write 1 to select Active low Output Override value to control IOs OE_N/GZ instead of the control from hardware
5	ie_override	R/W	0h	Active Low Input Override
4	ie_override_ctrl	R/W	0h	Active Low Input Override Control : Write 1 to select Active low Input Override value to control IOs IE_N/RXACTIVE_N instead of the control from hardware
3-0	func_sel	R/W	0h	Function select

6.2.9.21 PADAU_cfg_reg Register (Offset = 50h) [reset = C1h]

PADAU_cfg_reg is shown in and described in .

Return to the Summary Table.

Figure 6-1566. PADAU_cfg_reg Register

31	30	29	28	27	26	25	24
NU							
R/W-0h							
23	22	21	20	19	18	17	16
NU							
R/W-0h							
15	14	13	12	11	10	9	8
NU					sc1	pupdsel	pi
R/W-0h					R/W-0h	R/W-0h	R/W-0h
7	6	5	4	3	2	1	0
oe_override	oe_override_ctrl	ie_override	ie_override_ctrl	func_sel			
R/W-1h	R/W-1h	R/W-0h	R/W-0h	R/W-1h			

Table 6-1575. PADAU_cfg_reg Register Field Descriptions

Bit	Field	Type	Reset	Description
31-11	NU	R/W	0h	Reserved
10	sc1	R/W	0h	IO Slew rate control : 0 : higher slew rate. 1: Lower slew rate.
9	pupdsel	R/W	0h	Pullup/PullDown Selection 0 -- Pull Down
8	pi	R/W	0h	Pull Enable/Pull Disable 0 -- Enable
7	oe_override	R/W	1h	Active Low Output Override

Copyright © 2025 Texas Instruments Incorporated

Table 6-1575. PADAU_cfg_reg Register Field Descriptions (continued)

Bit	Field	Type	Reset	Description
6	oe_override_ctrl	R/W	1h	Active Low Output Override Control : Write 1 to select Active low Output Override value to control IOs OE_N/GZ instead of the control from hardware
5	ie_override	R/W	0h	Active Low Input Override
4	ie_override_ctrl	R/W	0h	Active Low Input Override Control : Write 1 to select Active low Input Override value to control IOs IE_N/RXACTIVE_N instead of the control from hardware
3-0	func_sel	R/W	1h	Function select

6.2.9.22 PADAV_cfg_reg Register (Offset = 54h) [reset = 2C1h]

PADAV_cfg_reg is shown in and described in .

Return to the Summary Table.

Figure 6-1567. PADAV_cfg_reg Register

31	30	29	28	27	26	25	24
NU							
R/W-0h							
23	22	21	20	19	18	17	16
NU							
R/W-0h							
15	14	13	12	11	10	9	8
NU					sc1	pupdsel	pi
R/W-0h					R/W-0h	R/W-1h	R/W-0h
7	6	5	4	3	2	1	0
oe_override	oe_override_ctrl	ie_override	ie_override_ctrl	func_sel			
R/W-1h	R/W-1h	R/W-0h	R/W-0h	R/W-1h			

Table 6-1576. PADAV_cfg_reg Register Field Descriptions

Bit	Field	Type	Reset	Description
31-11	NU	R/W	0h	Reserved
10	sc1	R/W	0h	IO Slew rate control : 0 : higher slew rate. 1: Lower slew rate.
9	pupdsel	R/W	1h	Pullup/PullDown Selection 0 -- Pull Down
8	pi	R/W	0h	Pull Enable/Pull Disable 0 -- Enable
7	oe_override	R/W	1h	Active Low Output Override
6	oe_override_ctrl	R/W	1h	Active Low Output Override Control : Write 1 to select Active low Output Override value to control IOs OE_N/GZ instead of the control from hardware
5	ie_override	R/W	0h	Active Low Input Override
4	ie_override_ctrl	R/W	0h	Active Low Input Override Control : Write 1 to select Active low Input Override value to control IOs IE_N/RXACTIVE_N instead of the control from hardware
3-0	func_sel	R/W	1h	Function select

6.2.9.23 PADAW_cfg_reg Register (Offset = 58h) [reset = 2C1h]

PADAW_cfg_reg is shown in and described in .

Copyright © 2025 Texas Instruments Incorporated

Return to the Summary Table.

Figure 6-1568. PADAW_cfg_reg Register

31	30	29	28	27	26	25	24
NU							
R/W-0h							
23	22	21	20	19	18	17	16
NU							
R/W-0h							
15	14	13	12	11	10	9	8
NU					sc1	pupdsel	pi
R/W-0h					R/W-0h	R/W-1h	R/W-0h
7	6	5	4	3	2	1	0
oe_override	oe_override_ctrl	ie_override	ie_override_ctrl	func_sel			
R/W-1h	R/W-1h	R/W-0h	R/W-0h	R/W-1h			

Table 6-1577. PADAW_cfg_reg Register Field Descriptions

Bit	Field	Type	Reset	Description
31-11	NU	R/W	0h	Reserved
10	sc1	R/W	0h	IO Slew rate control : 0 : higher slew rate. 1: Lower slew rate.
9	pupdsel	R/W	1h	Pullup/PullDown Selection 0 -- Pull Down
8	pi	R/W	0h	Pull Enable/Pull Disable 0 -- Enable
7	oe_override	R/W	1h	Active Low Output Override
6	oe_override_ctrl	R/W	1h	Active Low Output Override Control : Write 1 to select Active low Output Override value to control IOs OE_N/GZ instead of the control from hardware
5	ie_override	R/W	0h	Active Low Input Override
4	ie_override_ctrl	R/W	0h	Active Low Input Override Control : Write 1 to select Active low Input Override value to control IOs IE_N/RXACTIVE_N instead of the control from hardware
3-0	func_sel	R/W	1h	Function select

6.2.9.24 PADAX_cfg_reg Register (Offset = 5Ch) [reset = 101h]

PADAX_cfg_reg is shown in and described in .

Return to the Summary Table.

Figure 6-1569. PADAX_cfg_reg Register

31	30	29	28	27	26	25	24
NU							
R/W-0h							
23	22	21	20	19	18	17	16
NU							
R/W-0h							
15	14	13	12	11	10	9	8
NU					sc1	pupdsel	pi
R/W-0h					R/W-0h	R/W-0h	R/W-1h

Copyright © 2025 Texas Instruments Incorporated

Figure 6-1569. PADAX_cfg_reg Register (continued)

7	6	5	4	3	2	1	0
oe_override	oe_override_ctrl	ie_override	ie_override_ctrl	func_sel			
R/W-0h	R/W-0h	R/W-0h	R/W-0h	R/W-1h			

Table 6-1578. PADAX_cfg_reg Register Field Descriptions

Bit	Field	Type	Reset	Description
31-11	NU	R/W	0h	Reserved
10	sc1	R/W	0h	IO Slew rate control : 0 : higher slew rate. 1: Lower slew rate.
9	pupdsel	R/W	0h	Pullup/PullDown Selection 0 -- Pull Down
8	pi	R/W	1h	Pull Enable/Pull Disable 0 -- Enable
7	oe_override	R/W	0h	Active Low Output Override
6	oe_override_ctrl	R/W	0h	Active Low Output Override Control : Write 1 to select Active low Output Override value to control IOs OE_N/GZ instead of the control from hardware
5	ie_override	R/W	0h	Active Low Input Override
4	ie_override_ctrl	R/W	0h	Active Low Input Override Control : Write 1 to select Active low Input Override value to control IOs IE_N/RXACTIVE_N instead of the control from hardware
3-0	func_sel	R/W	1h	Function select

6.2.9.25 PADAY_cfg_reg Register (Offset = 60h) [reset = C1h]

PADAY_cfg_reg is shown in and described in .

Return to the Summary Table.

Figure 6-1570. PADAY_cfg_reg Register

31	30	29	28	27	26	25	24
NU							
R/W-0h							
23	22	21	20	19	18	17	16
NU							
R/W-0h							
15	14	13	12	11	10	9	8
NU					sc1	pupdsel	pi
R/W-0h					R/W-0h	R/W-0h	R/W-0h
7	6	5	4	3	2	1	0
oe_override	oe_override_ctrl	ie_override	ie_override_ctrl	func_sel			
R/W-1h	R/W-1h	R/W-0h	R/W-0h	R/W-1h			

Table 6-1579. PADAY_cfg_reg Register Field Descriptions

Bit	Field	Type	Reset	Description
31-11	NU	R/W	0h	Reserved
10	sc1	R/W	0h	IO Slew rate control : 0 : higher slew rate. 1: Lower slew rate.
9	pupdsel	R/W	0h	Pullup/PullDown Selection 0 -- Pull Down
8	pi	R/W	0h	Pull Enable/Pull Disable 0 -- Enable
7	oe_override	R/W	1h	Active Low Output Override

Copyright © 2025 Texas Instruments Incorporated

Table 6-1579. PADAY_cfg_reg Register Field Descriptions (continued)

Bit	Field	Type	Reset	Description
6	oe_override_ctrl	R/W	1h	Active Low Output Override Control : Write 1 to select Active low Output Override value to control IOs OE_N/GZ instead of the control from hardware
5	ie_override	R/W	0h	Active Low Input Override
4	ie_override_ctrl	R/W	0h	Active Low Input Override Control : Write 1 to select Active low Input Override value to control IOs IE_N/RXACTIVE_N instead of the control from hardware
3-0	func_sel	R/W	1h	Function select

6.2.9.26 PADAZ_cfg_reg Register (Offset = 64h) [reset = C1h]

PADAZ_cfg_reg is shown in and described in .

Return to the Summary Table.

Figure 6-1571. PADAZ_cfg_reg Register

31	30	29	28	27	26	25	24
NU							
R/W-0h							
23	22	21	20	19	18	17	16
NU							
R/W-0h							
15	14	13	12	11	10	9	8
NU					sc1	pupdsel	pi
R/W-0h					R/W-0h	R/W-0h	R/W-0h
7	6	5	4	3	2	1	0
oe_override	oe_override_ctrl	ie_override	ie_override_ctrl	func_sel			
R/W-1h	R/W-1h	R/W-0h	R/W-0h	R/W-1h			

Table 6-1580. PADAZ_cfg_reg Register Field Descriptions

Bit	Field	Type	Reset	Description
31-11	NU	R/W	0h	Reserved
10	sc1	R/W	0h	IO Slew rate control : 0 : higher slew rate. 1: Lower slew rate.
9	pupdsel	R/W	0h	Pullup/PullDown Selection 0 -- Pull Down
8	pi	R/W	0h	Pull Enable/Pull Disable 0 -- Enable
7	oe_override	R/W	1h	Active Low Output Override
6	oe_override_ctrl	R/W	1h	Active Low Output Override Control : Write 1 to select Active low Output Override value to control IOs OE_N/GZ instead of the control from hardware
5	ie_override	R/W	0h	Active Low Input Override
4	ie_override_ctrl	R/W	0h	Active Low Input Override Control : Write 1 to select Active low Input Override value to control IOs IE_N/RXACTIVE_N instead of the control from hardware
3-0	func_sel	R/W	1h	Function select

6.2.9.27 PADBA_cfg_reg Register (Offset = 68h) [reset = C1h]

PADBA_cfg_reg is shown in and described in .

Copyright © 2025 Texas Instruments Incorporated

Return to the Summary Table.

Figure 6-1572. PADBA_cfg_reg Register

31	30	29	28	27	26	25	24
NU							
R/W-0h							
23	22	21	20	19	18	17	16
NU							
R/W-0h							
15	14	13	12	11	10	9	8
NU					sc1	pupdsel	pi
R/W-0h					R/W-0h	R/W-0h	R/W-0h
7	6	5	4	3	2	1	0
oe_override	oe_override_ctrl	ie_override	ie_override_ctrl	func_sel			
R/W-1h	R/W-1h	R/W-0h	R/W-0h	R/W-1h			

Table 6-1581. PADBA_cfg_reg Register Field Descriptions

Bit	Field	Type	Reset	Description
31-11	NU	R/W	0h	Reserved
10	sc1	R/W	0h	IO Slew rate control : 0 : higher slew rate. 1: Lower slew rate.
9	pupdsel	R/W	0h	Pullup/PullDown Selection 0 -- Pull Down
8	pi	R/W	0h	Pull Enable/Pull Disable 0 -- Enable
7	oe_override	R/W	1h	Active Low Output Override
6	oe_override_ctrl	R/W	1h	Active Low Output Override Control : Write 1 to select Active low Output Override value to control IOs OE_N/GZ instead of the control from hardware
5	ie_override	R/W	0h	Active Low Input Override
4	ie_override_ctrl	R/W	0h	Active Low Input Override Control : Write 1 to select Active low Input Override value to control IOs IE_N/RXACTIVE_N instead of the control from hardware
3-0	func_sel	R/W	1h	Function select

6.2.9.28 PADBB_cfg_reg Register (Offset = 6Ch) [reset = C1h]

PADBB_cfg_reg is shown in and described in .

Return to the Summary Table.

Figure 6-1573. PADBB_cfg_reg Register

31	30	29	28	27	26	25	24
NU							
R/W-0h							
23	22	21	20	19	18	17	16
NU							
R/W-0h							
15	14	13	12	11	10	9	8
NU					sc1	pupdsel	pi
R/W-0h					R/W-0h	R/W-0h	R/W-0h

Copyright © 2025 Texas Instruments Incorporated

Figure 6-1573. PADBB_cfg_reg Register (continued)

7	6	5	4	3	2	1	0
oe_override	oe_override_ctrl	ie_override	ie_override_ctrl	func_sel			
R/W-1h	R/W-1h	R/W-0h	R/W-0h	R/W-1h			

Table 6-1582. PADBB_cfg_reg Register Field Descriptions

Bit	Field	Type	Reset	Description
31-11	NU	R/W	0h	Reserved
10	sc1	R/W	0h	IO Slew rate control : 0 : higher slew rate. 1: Lower slew rate.
9	pupdsel	R/W	0h	Pullup/PullDown Selection 0 -- Pull Down
8	pi	R/W	0h	Pull Enable/Pull Disable 0 -- Enable
7	oe_override	R/W	1h	Active Low Output Override
6	oe_override_ctrl	R/W	1h	Active Low Output Override Control : Write 1 to select Active low Output Override value to control IOs OE_N/GZ instead of the control from hardware
5	ie_override	R/W	0h	Active Low Input Override
4	ie_override_ctrl	R/W	0h	Active Low Input Override Control : Write 1 to select Active low Input Override value to control IOs IE_N/RXACTIVE_N instead of the control from hardware
3-0	func_sel	R/W	1h	Function select

6.2.9.29 PADBC_cfg_reg Register (Offset = 70h) [reset = C1h]

PADBC_cfg_reg is shown in and described in .

Return to the Summary Table.

Figure 6-1574. PADBC_cfg_reg Register

31	30	29	28	27	26	25	24
NU							
R/W-0h							
23	22	21	20	19	18	17	16
NU							
R/W-0h							
15	14	13	12	11	10	9	8
NU					sc1	pupdsel	pi
R/W-0h					R/W-0h	R/W-0h	R/W-0h
7	6	5	4	3	2	1	0
oe_override	oe_override_ctrl	ie_override	ie_override_ctrl	func_sel			
R/W-1h	R/W-1h	R/W-0h	R/W-0h	R/W-1h			

Table 6-1583. PADBC_cfg_reg Register Field Descriptions

Bit	Field	Type	Reset	Description
31-11	NU	R/W	0h	Reserved
10	sc1	R/W	0h	IO Slew rate control : 0 : higher slew rate. 1: Lower slew rate.
9	pupdsel	R/W	0h	Pullup/PullDown Selection 0 -- Pull Down
8	pi	R/W	0h	Pull Enable/Pull Disable 0 -- Enable
7	oe_override	R/W	1h	Active Low Output Override

Copyright © 2025 Texas Instruments Incorporated

Table 6-1583. PADBC_cfg_reg Register Field Descriptions (continued)

Bit	Field	Type	Reset	Description
6	oe_override_ctrl	R/W	1h	Active Low Output Override Control : Write 1 to select Active low Output Override value to control IOs OE_N/GZ instead of the control from hardware
5	ie_override	R/W	0h	Active Low Input Override
4	ie_override_ctrl	R/W	0h	Active Low Input Override Control : Write 1 to select Active low Input Override value to control IOs IE_N/RXACTIVE_N instead of the control from hardware
3-0	func_sel	R/W	1h	Function select

6.2.9.30 PADBD_cfg_reg Register (Offset = 74h) [reset = 2C1h]

PADBD_cfg_reg is shown in and described in .

Return to the Summary Table.

Figure 6-1575. PADBD_cfg_reg Register

31	30	29	28	27	26	25	24
NU							
R/W-0h							
23	22	21	20	19	18	17	16
NU							
R/W-0h							
15	14	13	12	11	10	9	8
NU					sc1	pupdsel	pi
R/W-0h					R/W-0h	R/W-1h	R/W-0h
7	6	5	4	3	2	1	0
oe_override	oe_override_ctrl	ie_override	ie_override_ctrl	func_sel			
R/W-1h	R/W-1h	R/W-0h	R/W-0h	R/W-1h			

Table 6-1584. PADBD_cfg_reg Register Field Descriptions

Bit	Field	Type	Reset	Description
31-11	NU	R/W	0h	Reserved
10	sc1	R/W	0h	IO Slew rate control : 0 : higher slew rate. 1: Lower slew rate.
9	pupdsel	R/W	1h	Pullup/PullDown Selection 0 -- Pull Down
8	pi	R/W	0h	Pull Enable/Pull Disable 0 -- Enable
7	oe_override	R/W	1h	Active Low Output Override
6	oe_override_ctrl	R/W	1h	Active Low Output Override Control : Write 1 to select Active low Output Override value to control IOs OE_N/GZ instead of the control from hardware
5	ie_override	R/W	0h	Active Low Input Override
4	ie_override_ctrl	R/W	0h	Active Low Input Override Control : Write 1 to select Active low Input Override value to control IOs IE_N/RXACTIVE_N instead of the control from hardware
3-0	func_sel	R/W	1h	Function select

6.2.9.31 PADBE_cfg_reg Register (Offset = 78h) [reset = 301h]

PADBE_cfg_reg is shown in and described in .

Copyright © 2025 Texas Instruments Incorporated

Return to the Summary Table.

Figure 6-1576. PADBE_cfg_reg Register

31	30	29	28	27	26	25	24
NU							
R/W-0h							
23	22	21	20	19	18	17	16
NU							
R/W-0h							
15	14	13	12	11	10	9	8
NU					sc1	pupdsel	pi
R/W-0h					R/W-0h	R/W-1h	R/W-1h
7	6	5	4	3	2	1	0
oe_override	oe_override_ctrl	ie_override	ie_override_ctrl	func_sel			
R/W-0h	R/W-0h	R/W-0h	R/W-0h	R/W-1h			

Table 6-1585. PADBE_cfg_reg Register Field Descriptions

Bit	Field	Type	Reset	Description
31-11	NU	R/W	0h	Reserved
10	sc1	R/W	0h	IO Slew rate control : 0 : higher slew rate. 1: Lower slew rate.
9	pupdsel	R/W	1h	Pullup/PullDown Selection 0 -- Pull Down
8	pi	R/W	1h	Pull Enable/Pull Disable 0 -- Enable
7	oe_override	R/W	0h	Active Low Output Override
6	oe_override_ctrl	R/W	0h	Active Low Output Override Control : Write 1 to select Active low Output Override value to control IOs OE_N/GZ instead of the control from hardware
5	ie_override	R/W	0h	Active Low Input Override
4	ie_override_ctrl	R/W	0h	Active Low Input Override Control : Write 1 to select Active low Input Override value to control IOs IE_N/RXACTIVE_N instead of the control from hardware
3-0	func_sel	R/W	1h	Function select

6.2.9.32 PADBF_cfg_reg Register (Offset = 7Ch) [reset = C1h]

PADBF_cfg_reg is shown in and described in .

Return to the Summary Table.

Figure 6-1577. PADBF_cfg_reg Register

31	30	29	28	27	26	25	24
NU							
R/W-0h							
23	22	21	20	19	18	17	16
NU							
R/W-0h							
15	14	13	12	11	10	9	8
NU					sc1	pupdsel	pi
R/W-0h					R/W-0h	R/W-0h	R/W-0h

Copyright © 2025 Texas Instruments Incorporated

Figure 6-1577. PADBF_cfg_reg Register (continued)

7	6	5	4	3	2	1	0
oe_override	oe_override_ctrl	ie_override	ie_override_ctrl	func_sel			
R/W-1h	R/W-1h	R/W-0h	R/W-0h	R/W-1h			

Table 6-1586. PADBF_cfg_reg Register Field Descriptions

Bit	Field	Type	Reset	Description
31-11	NU	R/W	0h	Reserved
10	sc1	R/W	0h	IO Slew rate control : 0 : higher slew rate. 1: Lower slew rate.
9	pupdsel	R/W	0h	Pullup/PullDown Selection 0 -- Pull Down
8	pi	R/W	0h	Pull Enable/Pull Disable 0 -- Enable
7	oe_override	R/W	1h	Active Low Output Override
6	oe_override_ctrl	R/W	1h	Active Low Output Override Control : Write 1 to select Active low Output Override value to control IOs OE_N/GZ instead of the control from hardware
5	ie_override	R/W	0h	Active Low Input Override
4	ie_override_ctrl	R/W	0h	Active Low Input Override Control : Write 1 to select Active low Input Override value to control IOs IE_N/RXACTIVE_N instead of the control from hardware
3-0	func_sel	R/W	1h	Function select

6.2.9.33 PADBG_cfg_reg Register (Offset = 80h) [reset = C1h]

PADBG_cfg_reg is shown in and described in .

Return to the Summary Table.

Figure 6-1578. PADBG_cfg_reg Register

31	30	29	28	27	26	25	24
NU							
R/W-0h							
23	22	21	20	19	18	17	16
NU							
R/W-0h							
15	14	13	12	11	10	9	8
NU					sc1	pupdsel	pi
R/W-0h					R/W-0h	R/W-0h	R/W-0h
7	6	5	4	3	2	1	0
oe_override	oe_override_ctrl	ie_override	ie_override_ctrl	func_sel			
R/W-1h	R/W-1h	R/W-0h	R/W-0h	R/W-1h			

Table 6-1587. PADBG_cfg_reg Register Field Descriptions

Bit	Field	Type	Reset	Description
31-11	NU	R/W	0h	Reserved
10	sc1	R/W	0h	IO Slew rate control : 0 : higher slew rate. 1: Lower slew rate.
9	pupdsel	R/W	0h	Pullup/PullDown Selection 0 -- Pull Down
8	pi	R/W	0h	Pull Enable/Pull Disable 0 -- Enable
7	oe_override	R/W	1h	Active Low Output Override

Copyright © 2025 Texas Instruments Incorporated

Table 6-1587. PADBG_cfg_reg Register Field Descriptions (continued)

Bit	Field	Type	Reset	Description
6	oe_override_ctrl	R/W	1h	Active Low Output Override Control : Write 1 to select Active low Output Override value to control IOs OE_N/GZ instead of the control from hardware
5	ie_override	R/W	0h	Active Low Input Override
4	ie_override_ctrl	R/W	0h	Active Low Input Override Control : Write 1 to select Active low Input Override value to control IOs IE_N/RXACTIVE_N instead of the control from hardware
3-0	func_sel	R/W	1h	Function select

6.2.9.34 PADBH_cfg_reg Register (Offset = 84h) [reset = C1h]

PADBH_cfg_reg is shown in and described in .

Return to the Summary Table.

Figure 6-1579. PADBH_cfg_reg Register

31	30	29	28	27	26	25	24
NU							
R/W-0h							
23	22	21	20	19	18	17	16
NU							
R/W-0h							
15	14	13	12	11	10	9	8
NU					sc1	pupdsel	pi
R/W-0h					R/W-0h	R/W-0h	R/W-0h
7	6	5	4	3	2	1	0
oe_override	oe_override_ctrl	ie_override	ie_override_ctrl	func_sel			
R/W-1h	R/W-1h	R/W-0h	R/W-0h	R/W-1h			

Table 6-1588. PADBH_cfg_reg Register Field Descriptions

Bit	Field	Type	Reset	Description
31-11	NU	R/W	0h	Reserved
10	sc1	R/W	0h	IO Slew rate control : 0 : higher slew rate. 1: Lower slew rate.
9	pupdsel	R/W	0h	Pullup/PullDown Selection 0 -- Pull Down
8	pi	R/W	0h	Pull Enable/Pull Disable 0 -- Enable
7	oe_override	R/W	1h	Active Low Output Override
6	oe_override_ctrl	R/W	1h	Active Low Output Override Control : Write 1 to select Active low Output Override value to control IOs OE_N/GZ instead of the control from hardware
5	ie_override	R/W	0h	Active Low Input Override
4	ie_override_ctrl	R/W	0h	Active Low Input Override Control : Write 1 to select Active low Input Override value to control IOs IE_N/RXACTIVE_N instead of the control from hardware
3-0	func_sel	R/W	1h	Function select

6.2.9.35 PADBI_cfg_reg Register (Offset = 88h) [reset = C1h]

PADBI_cfg_reg is shown in and described in .

Copyright © 2025 Texas Instruments Incorporated

Return to the Summary Table.

Figure 6-1580. PADBI_cfg_reg Register

31	30	29	28	27	26	25	24
NU							
R/W-0h							
23	22	21	20	19	18	17	16
NU							
R/W-0h							
15	14	13	12	11	10	9	8
NU					sc1	pupdsel	pi
R/W-0h					R/W-0h	R/W-0h	R/W-0h
7	6	5	4	3	2	1	0
oe_override	oe_override_ctrl	ie_override	ie_override_ctrl	func_sel			
R/W-1h	R/W-1h	R/W-0h	R/W-0h	R/W-1h			

Table 6-1589. PADBI_cfg_reg Register Field Descriptions

Bit	Field	Type	Reset	Description
31-11	NU	R/W	0h	Reserved
10	sc1	R/W	0h	IO Slew rate control : 0 : higher slew rate. 1: Lower slew rate.
9	pupdsel	R/W	0h	Pullup/PullDown Selection 0 -- Pull Down
8	pi	R/W	0h	Pull Enable/Pull Disable 0 -- Enable
7	oe_override	R/W	1h	Active Low Output Override
6	oe_override_ctrl	R/W	1h	Active Low Output Override Control : Write 1 to select Active low Output Override value to control IOs OE_N/GZ instead of the control from hardware
5	ie_override	R/W	0h	Active Low Input Override
4	ie_override_ctrl	R/W	0h	Active Low Input Override Control : Write 1 to select Active low Input Override value to control IOs IE_N/RXACTIVE_N instead of the control from hardware
3-0	func_sel	R/W	1h	Function select

6.2.9.36 PADBJ_cfg_reg Register (Offset = 8Ch) [reset = C1h]

PADBJ_cfg_reg is shown in and described in .

Return to the Summary Table.

Figure 6-1581. PADBJ_cfg_reg Register

31	30	29	28	27	26	25	24
NU							
R/W-0h							
23	22	21	20	19	18	17	16
NU							
R/W-0h							
15	14	13	12	11	10	9	8
NU					sc1	pupdsel	pi
R/W-0h					R/W-0h	R/W-0h	R/W-0h

Copyright © 2025 Texas Instruments Incorporated

Figure 6-1581. PADBJ_cfg_reg Register (continued)

7	6	5	4	3	2	1	0
oe_override	oe_override_ctrl	ie_override	ie_override_ctrl	func_sel			
R/W-1h	R/W-1h	R/W-0h	R/W-0h	R/W-1h			

Table 6-1590. PADBJ_cfg_reg Register Field Descriptions

Bit	Field	Type	Reset	Description
31-11	NU	R/W	0h	Reserved
10	sc1	R/W	0h	IO Slew rate control : 0 : higher slew rate. 1: Lower slew rate.
9	pupdsel	R/W	0h	Pullup/PullDown Selection 0 -- Pull Down
8	pi	R/W	0h	Pull Enable/Pull Disable 0 -- Enable
7	oe_override	R/W	1h	Active Low Output Override
6	oe_override_ctrl	R/W	1h	Active Low Output Override Control : Write 1 to select Active low Output Override value to control IOs OE_N/GZ instead of the control from hardware
5	ie_override	R/W	0h	Active Low Input Override
4	ie_override_ctrl	R/W	0h	Active Low Input Override Control : Write 1 to select Active low Input Override value to control IOs IE_N/RXACTIVE_N instead of the control from hardware
3-0	func_sel	R/W	1h	Function select

6.2.9.37 PADBK_cfg_reg Register (Offset = 90h) [reset = C1h]

PADBK_cfg_reg is shown in and described in .

Return to the Summary Table.

Figure 6-1582. PADBK_cfg_reg Register

31	30	29	28	27	26	25	24
NU							
R/W-0h							
23	22	21	20	19	18	17	16
NU							
R/W-0h							
15	14	13	12	11	10	9	8
NU					sc1	pupdsel	pi
R/W-0h					R/W-0h	R/W-0h	R/W-0h
7	6	5	4	3	2	1	0
oe_override	oe_override_ctrl	ie_override	ie_override_ctrl	func_sel			
R/W-1h	R/W-1h	R/W-0h	R/W-0h	R/W-1h			

Table 6-1591. PADBK_cfg_reg Register Field Descriptions

Bit	Field	Type	Reset	Description
31-11	NU	R/W	0h	Reserved
10	sc1	R/W	0h	IO Slew rate control : 0 : higher slew rate. 1: Lower slew rate.
9	pupdsel	R/W	0h	Pullup/PullDown Selection 0 -- Pull Down
8	pi	R/W	0h	Pull Enable/Pull Disable 0 -- Enable
7	oe_override	R/W	1h	Active Low Output Override

Copyright © 2025 Texas Instruments Incorporated

Table 6-1591. PADBK_cfg_reg Register Field Descriptions (continued)

Bit	Field	Type	Reset	Description
6	oe_override_ctrl	R/W	1h	Active Low Output Override Control : Write 1 to select Active low Output Override value to control IOs OE_N/GZ instead of the control from hardware
5	ie_override	R/W	0h	Active Low Input Override
4	ie_override_ctrl	R/W	0h	Active Low Input Override Control : Write 1 to select Active low Input Override value to control IOs IE_N/RXACTIVE_N instead of the control from hardware
3-0	func_sel	R/W	1h	Function select

6.2.9.38 PADBL_cfg_reg Register (Offset = 94h) [reset = C1h]

PADBL_cfg_reg is shown in and described in .

Return to the Summary Table.

Figure 6-1583. PADBL_cfg_reg Register

31	30	29	28	27	26	25	24
NU							
R/W-0h							
23	22	21	20	19	18	17	16
NU							
R/W-0h							
15	14	13	12	11	10	9	8
NU					sc1	pupdsel	pi
R/W-0h					R/W-0h	R/W-0h	R/W-0h
7	6	5	4	3	2	1	0
oe_override	oe_override_ctrl	ie_override	ie_override_ctrl	func_sel			
R/W-1h	R/W-1h	R/W-0h	R/W-0h	R/W-1h			

Table 6-1592. PADBL_cfg_reg Register Field Descriptions

Bit	Field	Type	Reset	Description
31-11	NU	R/W	0h	Reserved
10	sc1	R/W	0h	IO Slew rate control : 0 : higher slew rate. 1: Lower slew rate.
9	pupdsel	R/W	0h	Pullup/PullDown Selection 0 -- Pull Down
8	pi	R/W	0h	Pull Enable/Pull Disable 0 -- Enable
7	oe_override	R/W	1h	Active Low Output Override
6	oe_override_ctrl	R/W	1h	Active Low Output Override Control : Write 1 to select Active low Output Override value to control IOs OE_N/GZ instead of the control from hardware
5	ie_override	R/W	0h	Active Low Input Override
4	ie_override_ctrl	R/W	0h	Active Low Input Override Control : Write 1 to select Active low Input Override value to control IOs IE_N/RXACTIVE_N instead of the control from hardware
3-0	func_sel	R/W	1h	Function select

6.2.9.39 PADBM_cfg_reg Register (Offset = 98h) [reset = C1h]

PADBM_cfg_reg is shown in and described in .

Copyright © 2025 Texas Instruments Incorporated

Return to the Summary Table.

Figure 6-1584. PADBM_cfg_reg Register

31	30	29	28	27	26	25	24
NU							
R/W-0h							
23	22	21	20	19	18	17	16
NU							
R/W-0h							
15	14	13	12	11	10	9	8
NU					sc1	pupdsel	pi
R/W-0h					R/W-0h	R/W-0h	R/W-0h
7	6	5	4	3	2	1	0
oe_override	oe_override_ctrl	ie_override	ie_override_ctrl	func_sel			
R/W-1h	R/W-1h	R/W-0h	R/W-0h	R/W-1h			

Table 6-1593. PADBM_cfg_reg Register Field Descriptions

Bit	Field	Type	Reset	Description
31-11	NU	R/W	0h	Reserved
10	sc1	R/W	0h	IO Slew rate control : 0 : higher slew rate. 1: Lower slew rate.
9	pupdsel	R/W	0h	Pullup/PullDown Selection 0 -- Pull Down
8	pi	R/W	0h	Pull Enable/Pull Disable 0 -- Enable
7	oe_override	R/W	1h	Active Low Output Override
6	oe_override_ctrl	R/W	1h	Active Low Output Override Control : Write 1 to select Active low Output Override value to control IOs OE_N/GZ instead of the control from hardware
5	ie_override	R/W	0h	Active Low Input Override
4	ie_override_ctrl	R/W	0h	Active Low Input Override Control : Write 1 to select Active low Input Override value to control IOs IE_N/RXACTIVE_N instead of the control from hardware
3-0	func_sel	R/W	1h	Function select

6.2.9.40 PADBN_cfg_reg Register (Offset = 9Ch) [reset = C1h]

PADBN_cfg_reg is shown in and described in .

Return to the Summary Table.

Figure 6-1585. PADBN_cfg_reg Register

31	30	29	28	27	26	25	24
NU							
R/W-0h							
23	22	21	20	19	18	17	16
NU							
R/W-0h							
15	14	13	12	11	10	9	8
NU					sc1	pupdsel	pi
R/W-0h					R/W-0h	R/W-0h	R/W-0h

Copyright © 2025 Texas Instruments Incorporated

Figure 6-1585. PADBN_cfg_reg Register (continued)

7	6	5	4	3	2	1	0
oe_override	oe_override_ctrl	ie_override	ie_override_ctrl	func_sel			
R/W-1h	R/W-1h	R/W-0h	R/W-0h	R/W-1h			

Table 6-1594. PADBN_cfg_reg Register Field Descriptions

Bit	Field	Type	Reset	Description
31-11	NU	R/W	0h	Reserved
10	sc1	R/W	0h	IO Slew rate control : 0 : higher slew rate. 1: Lower slew rate.
9	pupdsel	R/W	0h	Pullup/PullDown Selection 0 -- Pull Down
8	pi	R/W	0h	Pull Enable/Pull Disable 0 -- Enable
7	oe_override	R/W	1h	Active Low Output Override
6	oe_override_ctrl	R/W	1h	Active Low Output Override Control : Write 1 to select Active low Output Override value to control IOs OE_N/GZ instead of the control from hardware
5	ie_override	R/W	0h	Active Low Input Override
4	ie_override_ctrl	R/W	0h	Active Low Input Override Control : Write 1 to select Active low Input Override value to control IOs IE_N/RXACTIVE_N instead of the control from hardware
3-0	func_sel	R/W	1h	Function select

6.2.9.41 PADBO_cfg_reg Register (Offset = A0h) [reset = C1h]

PADBO_cfg_reg is shown in and described in .

Return to the Summary Table.

Figure 6-1586. PADBO_cfg_reg Register

31	30	29	28	27	26	25	24
NU							
R/W-0h							
23	22	21	20	19	18	17	16
NU							
R/W-0h							
15	14	13	12	11	10	9	8
NU					sc1	pupdsel	pi
R/W-0h					R/W-0h	R/W-0h	R/W-0h
7	6	5	4	3	2	1	0
oe_override	oe_override_ctrl	ie_override	ie_override_ctrl	func_sel			
R/W-1h	R/W-1h	R/W-0h	R/W-0h	R/W-1h			

Table 6-1595. PADBO_cfg_reg Register Field Descriptions

Bit	Field	Type	Reset	Description
31-11	NU	R/W	0h	Reserved
10	sc1	R/W	0h	IO Slew rate control : 0 : higher slew rate. 1: Lower slew rate.
9	pupdsel	R/W	0h	Pullup/PullDown Selection 0 -- Pull Down
8	pi	R/W	0h	Pull Enable/Pull Disable 0 -- Enable
7	oe_override	R/W	1h	Active Low Output Override

Copyright © 2025 Texas Instruments Incorporated

Table 6-1595. PADBO_cfg_reg Register Field Descriptions (continued)

Bit	Field	Type	Reset	Description
6	oe_override_ctrl	R/W	1h	Active Low Output Override Control : Write 1 to select Active low Output Override value to control IOs OE_N/GZ instead of the control from hardware
5	ie_override	R/W	0h	Active Low Input Override
4	ie_override_ctrl	R/W	0h	Active Low Input Override Control : Write 1 to select Active low Input Override value to control IOs IE_N/RXACTIVE_N instead of the control from hardware
3-0	func_sel	R/W	1h	Function select

6.2.9.42 PADBP_cfg_reg Register (Offset = A4h) [reset = C1h]

PADBP_cfg_reg is shown in and described in .

Return to the Summary Table.

Figure 6-1587. PADBP_cfg_reg Register

31	30	29	28	27	26	25	24
NU							
R/W-0h							
23	22	21	20	19	18	17	16
NU							
R/W-0h							
15	14	13	12	11	10	9	8
NU					sc1	pupdsel	pi
R/W-0h					R/W-0h	R/W-0h	R/W-0h
7	6	5	4	3	2	1	0
oe_override	oe_override_ctrl	ie_override	ie_override_ctrl	func_sel			
R/W-1h	R/W-1h	R/W-0h	R/W-0h	R/W-1h			

Table 6-1596. PADBP_cfg_reg Register Field Descriptions

Bit	Field	Type	Reset	Description
31-11	NU	R/W	0h	Reserved
10	sc1	R/W	0h	IO Slew rate control : 0 : higher slew rate. 1: Lower slew rate.
9	pupdsel	R/W	0h	Pullup/PullDown Selection 0 -- Pull Down
8	pi	R/W	0h	Pull Enable/Pull Disable 0 -- Enable
7	oe_override	R/W	1h	Active Low Output Override
6	oe_override_ctrl	R/W	1h	Active Low Output Override Control : Write 1 to select Active low Output Override value to control IOs OE_N/GZ instead of the control from hardware
5	ie_override	R/W	0h	Active Low Input Override
4	ie_override_ctrl	R/W	0h	Active Low Input Override Control : Write 1 to select Active low Input Override value to control IOs IE_N/RXACTIVE_N instead of the control from hardware
3-0	func_sel	R/W	1h	Function select

6.2.9.43 PADBQ_cfg_reg Register (Offset = A8h) [reset = C1h]

PADBQ_cfg_reg is shown in and described in .

Copyright © 2025 Texas Instruments Incorporated

Return to the Summary Table.

Figure 6-1588. PADBQ_cfg_reg Register

31	30	29	28	27	26	25	24
NU							
R/W-0h							
23	22	21	20	19	18	17	16
NU							
R/W-0h							
15	14	13	12	11	10	9	8
NU					sc1	pupdsel	pi
R/W-0h					R/W-0h	R/W-0h	R/W-0h
7	6	5	4	3	2	1	0
oe_override	oe_override_ctrl	ie_override	ie_override_ctrl	func_sel			
R/W-1h	R/W-1h	R/W-0h	R/W-0h	R/W-1h			

Table 6-1597. PADBQ_cfg_reg Register Field Descriptions

Bit	Field	Type	Reset	Description
31-11	NU	R/W	0h	Reserved
10	sc1	R/W	0h	IO Slew rate control : 0 : higher slew rate. 1: Lower slew rate.
9	pupdsel	R/W	0h	Pullup/PullDown Selection 0 -- Pull Down
8	pi	R/W	0h	Pull Enable/Pull Disable 0 -- Enable
7	oe_override	R/W	1h	Active Low Output Override
6	oe_override_ctrl	R/W	1h	Active Low Output Override Control : Write 1 to select Active low Output Override value to control IOs OE_N/GZ instead of the control from hardware
5	ie_override	R/W	0h	Active Low Input Override
4	ie_override_ctrl	R/W	0h	Active Low Input Override Control : Write 1 to select Active low Input Override value to control IOs IE_N/RXACTIVE_N instead of the control from hardware
3-0	func_sel	R/W	1h	Function select

6.2.9.44 PADBR_cfg_reg Register (Offset = ACh) [reset = C1h]

PADBR_cfg_reg is shown in and described in .

Return to the Summary Table.

Figure 6-1589. PADBR_cfg_reg Register

31	30	29	28	27	26	25	24
NU							
R/W-0h							
23	22	21	20	19	18	17	16
NU							
R/W-0h							
15	14	13	12	11	10	9	8
NU					sc1	pupdsel	pi
R/W-0h					R/W-0h	R/W-0h	R/W-0h

Copyright © 2025 Texas Instruments Incorporated

Figure 6-1589. PADBR_cfg_reg Register (continued)

7	6	5	4	3	2	1	0
oe_override	oe_override_ctrl	ie_override	ie_override_ctrl	func_sel			
R/W-1h	R/W-1h	R/W-0h	R/W-0h	R/W-1h			

Table 6-1598. PADBR_cfg_reg Register Field Descriptions

Bit	Field	Type	Reset	Description
31-11	NU	R/W	0h	Reserved
10	sc1	R/W	0h	IO Slew rate control : 0 : higher slew rate. 1: Lower slew rate.
9	pupdsel	R/W	0h	Pullup/PullDown Selection 0 -- Pull Down
8	pi	R/W	0h	Pull Enable/Pull Disable 0 -- Enable
7	oe_override	R/W	1h	Active Low Output Override
6	oe_override_ctrl	R/W	1h	Active Low Output Override Control : Write 1 to select Active low Output Override value to control IOs OE_N/GZ instead of the control from hardware
5	ie_override	R/W	0h	Active Low Input Override
4	ie_override_ctrl	R/W	0h	Active Low Input Override Control : Write 1 to select Active low Input Override value to control IOs IE_N/RXACTIVE_N instead of the control from hardware
3-0	func_sel	R/W	1h	Function select

6.2.9.45 PADBS_cfg_reg Register (Offset = B0h) [reset = C1h]

PADBS_cfg_reg is shown in and described in .

Return to the Summary Table.

Figure 6-1590. PADBS_cfg_reg Register

31	30	29	28	27	26	25	24
NU							
R/W-0h							
23	22	21	20	19	18	17	16
NU							
R/W-0h							
15	14	13	12	11	10	9	8
NU					sc1	pupdsel	pi
R/W-0h					R/W-0h	R/W-0h	R/W-0h
7	6	5	4	3	2	1	0
oe_override	oe_override_ctrl	ie_override	ie_override_ctrl	func_sel			
R/W-1h	R/W-1h	R/W-0h	R/W-0h	R/W-1h			

Table 6-1599. PADBS_cfg_reg Register Field Descriptions

Bit	Field	Type	Reset	Description
31-11	NU	R/W	0h	Reserved
10	sc1	R/W	0h	IO Slew rate control : 0 : higher slew rate. 1: Lower slew rate.
9	pupdsel	R/W	0h	Pullup/PullDown Selection 0 -- Pull Down
8	pi	R/W	0h	Pull Enable/Pull Disable 0 -- Enable
7	oe_override	R/W	1h	Active Low Output Override

Copyright © 2025 Texas Instruments Incorporated

Table 6-1599. PADBS_cfg_reg Register Field Descriptions (continued)

Bit	Field	Type	Reset	Description
6	oe_override_ctrl	R/W	1h	Active Low Output Override Control : Write 1 to select Active low Output Override value to control IOs OE_N/GZ instead of the control from hardware
5	ie_override	R/W	0h	Active Low Input Override
4	ie_override_ctrl	R/W	0h	Active Low Input Override Control : Write 1 to select Active low Input Override value to control IOs IE_N/RXACTIVE_N instead of the control from hardware
3-0	func_sel	R/W	1h	Function select

6.2.9.46 PADBT_cfg_reg Register (Offset = B4h) [reset = C1h]

PADBT_cfg_reg is shown in and described in .

Return to the Summary Table.

Figure 6-1591. PADBT_cfg_reg Register

31	30	29	28	27	26	25	24
NU							
R/W-0h							
23	22	21	20	19	18	17	16
NU							
R/W-0h							
15	14	13	12	11	10	9	8
NU					sc1	pupdsel	pi
R/W-0h					R/W-0h	R/W-0h	R/W-0h
7	6	5	4	3	2	1	0
oe_override	oe_override_ctrl	ie_override	ie_override_ctrl	func_sel			
R/W-1h	R/W-1h	R/W-0h	R/W-0h	R/W-1h			

Table 6-1600. PADBT_cfg_reg Register Field Descriptions

Bit	Field	Type	Reset	Description
31-11	NU	R/W	0h	Reserved
10	sc1	R/W	0h	IO Slew rate control : 0 : higher slew rate. 1: Lower slew rate.
9	pupdsel	R/W	0h	Pullup/PullDown Selection 0 -- Pull Down
8	pi	R/W	0h	Pull Enable/Pull Disable 0 -- Enable
7	oe_override	R/W	1h	Active Low Output Override
6	oe_override_ctrl	R/W	1h	Active Low Output Override Control : Write 1 to select Active low Output Override value to control IOs OE_N/GZ instead of the control from hardware
5	ie_override	R/W	0h	Active Low Input Override
4	ie_override_ctrl	R/W	0h	Active Low Input Override Control : Write 1 to select Active low Input Override value to control IOs IE_N/RXACTIVE_N instead of the control from hardware
3-0	func_sel	R/W	1h	Function select

6.2.9.47 PADBU_cfg_reg Register (Offset = B8h) [reset = C1h]

PADBU_cfg_reg is shown in and described in .

Copyright © 2025 Texas Instruments Incorporated

Return to the Summary Table.

Figure 6-1592. PADBU_cfg_reg Register

31	30	29	28	27	26	25	24
NU							
R/W-0h							
23	22	21	20	19	18	17	16
NU							
R/W-0h							
15	14	13	12	11	10	9	8
NU					sc1	pupdsel	pi
R/W-0h					R/W-0h	R/W-0h	R/W-0h
7	6	5	4	3	2	1	0
oe_override	oe_override_ctrl	ie_override	ie_override_ctrl	func_sel			
R/W-1h	R/W-1h	R/W-0h	R/W-0h	R/W-1h			

Table 6-1601. PADBU_cfg_reg Register Field Descriptions

Bit	Field	Type	Reset	Description
31-11	NU	R/W	0h	Reserved
10	sc1	R/W	0h	IO Slew rate control : 0 : higher slew rate. 1: Lower slew rate.
9	pupdsel	R/W	0h	Pullup/PullDown Selection 0 -- Pull Down
8	pi	R/W	0h	Pull Enable/Pull Disable 0 -- Enable
7	oe_override	R/W	1h	Active Low Output Override
6	oe_override_ctrl	R/W	1h	Active Low Output Override Control : Write 1 to select Active low Output Override value to control IOs OE_N/GZ instead of the control from hardware
5	ie_override	R/W	0h	Active Low Input Override
4	ie_override_ctrl	R/W	0h	Active Low Input Override Control : Write 1 to select Active low Input Override value to control IOs IE_N/RXACTIVE_N instead of the control from hardware
3-0	func_sel	R/W	1h	Function select

6.2.9.48 PADBV_cfg_reg Register (Offset = BCh) [reset = C1h]

PADBV_cfg_reg is shown in and described in .

Return to the Summary Table.

Figure 6-1593. PADBV_cfg_reg Register

31	30	29	28	27	26	25	24
NU							
R/W-0h							
23	22	21	20	19	18	17	16
NU							
R/W-0h							
15	14	13	12	11	10	9	8
NU					sc1	pupdsel	pi
R/W-0h					R/W-0h	R/W-0h	R/W-0h

Copyright © 2025 Texas Instruments Incorporated

Figure 6-1593. PADBV_cfg_reg Register (continued)

7	6	5	4	3	2	1	0
oe_override	oe_override_ctrl	ie_override	ie_override_ctrl	func_sel			
R/W-1h	R/W-1h	R/W-0h	R/W-0h	R/W-1h			

Table 6-1602. PADBV_cfg_reg Register Field Descriptions

Bit	Field	Type	Reset	Description
31-11	NU	R/W	0h	Reserved
10	sc1	R/W	0h	IO Slew rate control : 0 : higher slew rate. 1: Lower slew rate.
9	pupdsel	R/W	0h	Pullup/PullDown Selection 0 -- Pull Down
8	pi	R/W	0h	Pull Enable/Pull Disable 0 -- Enable
7	oe_override	R/W	1h	Active Low Output Override
6	oe_override_ctrl	R/W	1h	Active Low Output Override Control : Write 1 to select Active low Output Override value to control IOs OE_N/GZ instead of the control from hardware
5	ie_override	R/W	0h	Active Low Input Override
4	ie_override_ctrl	R/W	0h	Active Low Input Override Control : Write 1 to select Active low Input Override value to control IOs IE_N/RXACTIVE_N instead of the control from hardware
3-0	func_sel	R/W	1h	Function select

6.2.9.49 PADBW_cfg_reg Register (Offset = C0h) [reset = C1h]

PADBW_cfg_reg is shown in and described in .

Return to the Summary Table.

Figure 6-1594. PADBW_cfg_reg Register

31	30	29	28	27	26	25	24
NU							
R/W-0h							
23	22	21	20	19	18	17	16
NU							
R/W-0h							
15	14	13	12	11	10	9	8
NU					sc1	pupdsel	pi
R/W-0h					R/W-0h	R/W-0h	R/W-0h
7	6	5	4	3	2	1	0
oe_override	oe_override_ctrl	ie_override	ie_override_ctrl	func_sel			
R/W-1h	R/W-1h	R/W-0h	R/W-0h	R/W-1h			

Table 6-1603. PADBW_cfg_reg Register Field Descriptions

Bit	Field	Type	Reset	Description
31-11	NU	R/W	0h	Reserved
10	sc1	R/W	0h	IO Slew rate control : 0 : higher slew rate. 1: Lower slew rate.
9	pupdsel	R/W	0h	Pullup/PullDown Selection 0 -- Pull Down
8	pi	R/W	0h	Pull Enable/Pull Disable 0 -- Enable
7	oe_override	R/W	1h	Active Low Output Override

Copyright © 2025 Texas Instruments Incorporated

Table 6-1603. PADBW_cfg_reg Register Field Descriptions (continued)

Bit	Field	Type	Reset	Description
6	oe_override_ctrl	R/W	1h	Active Low Output Override Control : Write 1 to select Active low Output Override value to control IOs OE_N/GZ instead of the control from hardware
5	ie_override	R/W	0h	Active Low Input Override
4	ie_override_ctrl	R/W	0h	Active Low Input Override Control : Write 1 to select Active low Input Override value to control IOs IE_N/RXACTIVE_N instead of the control from hardware
3-0	func_sel	R/W	1h	Function select

6.2.9.50 PADBX_cfg_reg Register (Offset = C4h) [reset = C1h]

PADBX_cfg_reg is shown in and described in .

Return to the Summary Table.

Figure 6-1595. PADBX_cfg_reg Register

31	30	29	28	27	26	25	24
NU							
R/W-0h							
23	22	21	20	19	18	17	16
NU							
R/W-0h							
15	14	13	12	11	10	9	8
NU					sc1	pupdsel	pi
R/W-0h					R/W-0h	R/W-0h	R/W-0h
7	6	5	4	3	2	1	0
oe_override	oe_override_ctrl	ie_override	ie_override_ctrl	func_sel			
R/W-1h	R/W-1h	R/W-0h	R/W-0h	R/W-1h			

Table 6-1604. PADBX_cfg_reg Register Field Descriptions

Bit	Field	Type	Reset	Description
31-11	NU	R/W	0h	Reserved
10	sc1	R/W	0h	IO Slew rate control : 0 : higher slew rate. 1: Lower slew rate.
9	pupdsel	R/W	0h	Pullup/PullDown Selection 0 -- Pull Down
8	pi	R/W	0h	Pull Enable/Pull Disable 0 -- Enable
7	oe_override	R/W	1h	Active Low Output Override
6	oe_override_ctrl	R/W	1h	Active Low Output Override Control : Write 1 to select Active low Output Override value to control IOs OE_N/GZ instead of the control from hardware
5	ie_override	R/W	0h	Active Low Input Override
4	ie_override_ctrl	R/W	0h	Active Low Input Override Control : Write 1 to select Active low Input Override value to control IOs IE_N/RXACTIVE_N instead of the control from hardware
3-0	func_sel	R/W	1h	Function select

6.2.9.51 PADBY_cfg_reg Register (Offset = C8h) [reset = C1h]

PADBY_cfg_reg is shown in and described in .

Copyright © 2025 Texas Instruments Incorporated

Return to the Summary Table.

Figure 6-1596. PADBY_cfg_reg Register

31	30	29	28	27	26	25	24
NU							
R/W-0h							
23	22	21	20	19	18	17	16
NU							
R/W-0h							
15	14	13	12	11	10	9	8
NU					sc1	pupdsel	pi
R/W-0h					R/W-0h	R/W-0h	R/W-0h
7	6	5	4	3	2	1	0
oe_override	oe_override_ctrl	ie_override	ie_override_ctrl	func_sel			
R/W-1h	R/W-1h	R/W-0h	R/W-0h	R/W-1h			

Table 6-1605. PADBY_cfg_reg Register Field Descriptions

Bit	Field	Type	Reset	Description
31-11	NU	R/W	0h	Reserved
10	sc1	R/W	0h	IO Slew rate control : 0 : higher slew rate. 1: Lower slew rate.
9	pupdsel	R/W	0h	Pullup/PullDown Selection 0 -- Pull Down
8	pi	R/W	0h	Pull Enable/Pull Disable 0 -- Enable
7	oe_override	R/W	1h	Active Low Output Override
6	oe_override_ctrl	R/W	1h	Active Low Output Override Control : Write 1 to select Active low Output Override value to control IOs OE_N/GZ instead of the control from hardware
5	ie_override	R/W	0h	Active Low Input Override
4	ie_override_ctrl	R/W	0h	Active Low Input Override Control : Write 1 to select Active low Input Override value to control IOs IE_N/RXACTIVE_N instead of the control from hardware
3-0	func_sel	R/W	1h	Function select

6.2.9.52 PADBZ_cfg_reg Register (Offset = CCh) [reset = C1h]

PADBZ_cfg_reg is shown in and described in .

Return to the Summary Table.

Figure 6-1597. PADBZ_cfg_reg Register

31	30	29	28	27	26	25	24
NU							
R/W-0h							
23	22	21	20	19	18	17	16
NU							
R/W-0h							
15	14	13	12	11	10	9	8
NU					sc1	pupdsel	pi
R/W-0h					R/W-0h	R/W-0h	R/W-0h

Copyright © 2025 Texas Instruments Incorporated

Figure 6-1597. PADBZ_cfg_reg Register (continued)

7	6	5	4	3	2	1	0
oe_override	oe_override_ctrl	ie_override	ie_override_ctrl	func_sel			
R/W-1h	R/W-1h	R/W-0h	R/W-0h	R/W-1h			

Table 6-1606. PADBZ_cfg_reg Register Field Descriptions

Bit	Field	Type	Reset	Description
31-11	NU	R/W	0h	Reserved
10	sc1	R/W	0h	IO Slew rate control : 0 : higher slew rate. 1: Lower slew rate.
9	pupdsel	R/W	0h	Pullup/PullDown Selection 0 -- Pull Down
8	pi	R/W	0h	Pull Enable/Pull Disable 0 -- Enable
7	oe_override	R/W	1h	Active Low Output Override
6	oe_override_ctrl	R/W	1h	Active Low Output Override Control : Write 1 to select Active low Output Override value to control IOs OE_N/GZ instead of the control from hardware
5	ie_override	R/W	0h	Active Low Input Override
4	ie_override_ctrl	R/W	0h	Active Low Input Override Control : Write 1 to select Active low Input Override value to control IOs IE_N/RXACTIVE_N instead of the control from hardware
3-0	func_sel	R/W	1h	Function select

6.2.9.53 PADCA_cfg_reg Register (Offset = D0h) [reset = C1h]

PADCA_cfg_reg is shown in and described in .

Return to the Summary Table.

Figure 6-1598. PADCA_cfg_reg Register

31	30	29	28	27	26	25	24
NU							
R/W-0h							
23	22	21	20	19	18	17	16
NU							
R/W-0h							
15	14	13	12	11	10	9	8
NU					sc1	pupdsel	pi
R/W-0h					R/W-0h	R/W-0h	R/W-0h
7	6	5	4	3	2	1	0
oe_override	oe_override_ctrl	ie_override	ie_override_ctrl	func_sel			
R/W-1h	R/W-1h	R/W-0h	R/W-0h	R/W-1h			

Table 6-1607. PADCA_cfg_reg Register Field Descriptions

Bit	Field	Type	Reset	Description
31-11	NU	R/W	0h	Reserved
10	sc1	R/W	0h	IO Slew rate control : 0 : higher slew rate. 1: Lower slew rate.
9	pupdsel	R/W	0h	Pullup/PullDown Selection 0 -- Pull Down
8	pi	R/W	0h	Pull Enable/Pull Disable 0 -- Enable
7	oe_override	R/W	1h	Active Low Output Override

Copyright © 2025 Texas Instruments Incorporated

Table 6-1607. PADCA_cfg_reg Register Field Descriptions (continued)

Bit	Field	Type	Reset	Description
6	oe_override_ctrl	R/W	1h	Active Low Output Override Control : Write 1 to select Active low Output Override value to control IOs OE_N/GZ instead of the control from hardware
5	ie_override	R/W	0h	Active Low Input Override
4	ie_override_ctrl	R/W	0h	Active Low Input Override Control : Write 1 to select Active low Input Override value to control IOs IE_N/RXACTIVE_N instead of the control from hardware
3-0	func_sel	R/W	1h	Function select

6.2.9.54 PADCB_cfg_reg Register (Offset = D4h) [reset = C1h]

PADCB_cfg_reg is shown in and described in .

Return to the Summary Table.

Figure 6-1599. PADCB_cfg_reg Register

31	30	29	28	27	26	25	24
NU							
R/W-0h							
23	22	21	20	19	18	17	16
NU							
R/W-0h							
15	14	13	12	11	10	9	8
NU					sc1	pupdsel	pi
R/W-0h					R/W-0h	R/W-0h	R/W-0h
7	6	5	4	3	2	1	0
oe_override	oe_override_ctrl	ie_override	ie_override_ctrl	func_sel			
R/W-1h	R/W-1h	R/W-0h	R/W-0h	R/W-1h			

Table 6-1608. PADCB_cfg_reg Register Field Descriptions

Bit	Field	Type	Reset	Description
31-11	NU	R/W	0h	Reserved
10	sc1	R/W	0h	IO Slew rate control : 0 : higher slew rate. 1: Lower slew rate.
9	pupdsel	R/W	0h	Pullup/PullDown Selection 0 -- Pull Down
8	pi	R/W	0h	Pull Enable/Pull Disable 0 -- Enable
7	oe_override	R/W	1h	Active Low Output Override
6	oe_override_ctrl	R/W	1h	Active Low Output Override Control : Write 1 to select Active low Output Override value to control IOs OE_N/GZ instead of the control from hardware
5	ie_override	R/W	0h	Active Low Input Override
4	ie_override_ctrl	R/W	0h	Active Low Input Override Control : Write 1 to select Active low Input Override value to control IOs IE_N/RXACTIVE_N instead of the control from hardware
3-0	func_sel	R/W	1h	Function select

6.2.9.55 PADCC_cfg_reg Register (Offset = D8h) [reset = C1h]

PADCC_cfg_reg is shown in and described in .

Copyright © 2025 Texas Instruments Incorporated

Return to the Summary Table.

Figure 6-1600. PADCC_cfg_reg Register

31	30	29	28	27	26	25	24
NU							
R/W-0h							
23	22	21	20	19	18	17	16
NU							
R/W-0h							
15	14	13	12	11	10	9	8
NU					sc1	pupdsel	pi
R/W-0h					R/W-0h	R/W-0h	R/W-0h
7	6	5	4	3	2	1	0
oe_override	oe_override_ctrl	ie_override	ie_override_ctrl	func_sel			
R/W-1h	R/W-1h	R/W-0h	R/W-0h	R/W-1h			

Table 6-1609. PADCC_cfg_reg Register Field Descriptions

Bit	Field	Type	Reset	Description
31-11	NU	R/W	0h	Reserved
10	sc1	R/W	0h	IO Slew rate control : 0 : higher slew rate. 1: Lower slew rate.
9	pupdsel	R/W	0h	Pullup/PullDown Selection 0 -- Pull Down
8	pi	R/W	0h	Pull Enable/Pull Disable 0 -- Enable
7	oe_override	R/W	1h	Active Low Output Override
6	oe_override_ctrl	R/W	1h	Active Low Output Override Control : Write 1 to select Active low Output Override value to control IOs OE_N/GZ instead of the control from hardware
5	ie_override	R/W	0h	Active Low Input Override
4	ie_override_ctrl	R/W	0h	Active Low Input Override Control : Write 1 to select Active low Input Override value to control IOs IE_N/RXACTIVE_N instead of the control from hardware
3-0	func_sel	R/W	1h	Function select

6.2.9.56 PADCD_cfg_reg Register (Offset = DCh) [reset = C1h]

PADCD_cfg_reg is shown in and described in .

Return to the Summary Table.

Figure 6-1601. PADCD_cfg_reg Register

31	30	29	28	27	26	25	24
NU							
R/W-0h							
23	22	21	20	19	18	17	16
NU							
R/W-0h							
15	14	13	12	11	10	9	8
NU					sc1	pupdsel	pi
R/W-0h					R/W-0h	R/W-0h	R/W-0h

Copyright © 2025 Texas Instruments Incorporated

Figure 6-1601. PADCD_cfg_reg Register (continued)

7	6	5	4	3	2	1	0
oe_override	oe_override_ctrl	ie_override	ie_override_ctrl	func_sel			
R/W-1h	R/W-1h	R/W-0h	R/W-0h	R/W-1h			

Table 6-1610. PADCD_cfg_reg Register Field Descriptions

Bit	Field	Type	Reset	Description
31-11	NU	R/W	0h	Reserved
10	sc1	R/W	0h	IO Slew rate control : 0 : higher slew rate. 1: Lower slew rate.
9	pupdsel	R/W	0h	Pullup/PullDown Selection 0 -- Pull Down
8	pi	R/W	0h	Pull Enable/Pull Disable 0 -- Enable
7	oe_override	R/W	1h	Active Low Output Override
6	oe_override_ctrl	R/W	1h	Active Low Output Override Control : Write 1 to select Active low Output Override value to control IOs OE_N/GZ instead of the control from hardware
5	ie_override	R/W	0h	Active Low Input Override
4	ie_override_ctrl	R/W	0h	Active Low Input Override Control : Write 1 to select Active low Input Override value to control IOs IE_N/RXACTIVE_N instead of the control from hardware
3-0	func_sel	R/W	1h	Function select

6.2.9.57 PADCE_cfg_reg Register (Offset = E0h) [reset = C1h]

PADCE_cfg_reg is shown in and described in .

Return to the Summary Table.

Figure 6-1602. PADCE_cfg_reg Register

31	30	29	28	27	26	25	24
NU							
R/W-0h							
23	22	21	20	19	18	17	16
NU							
R/W-0h							
15	14	13	12	11	10	9	8
NU					sc1	pupdsel	pi
R/W-0h					R/W-0h	R/W-0h	R/W-0h
7	6	5	4	3	2	1	0
oe_override	oe_override_ctrl	ie_override	ie_override_ctrl	func_sel			
R/W-1h	R/W-1h	R/W-0h	R/W-0h	R/W-1h			

Table 6-1611. PADCE_cfg_reg Register Field Descriptions

Bit	Field	Type	Reset	Description
31-11	NU	R/W	0h	Reserved
10	sc1	R/W	0h	IO Slew rate control : 0 : higher slew rate. 1: Lower slew rate.
9	pupdsel	R/W	0h	Pullup/PullDown Selection 0 -- Pull Down
8	pi	R/W	0h	Pull Enable/Pull Disable 0 -- Enable
7	oe_override	R/W	1h	Active Low Output Override

Copyright © 2025 Texas Instruments Incorporated

Table 6-1611. PADCE_cfg_reg Register Field Descriptions (continued)

Bit	Field	Type	Reset	Description
6	oe_override_ctrl	R/W	1h	Active Low Output Override Control : Write 1 to select Active low Output Override value to control IOs OE_N/GZ instead of the control from hardware
5	ie_override	R/W	0h	Active Low Input Override
4	ie_override_ctrl	R/W	0h	Active Low Input Override Control : Write 1 to select Active low Input Override value to control IOs IE_N/RXACTIVE_N instead of the control from hardware
3-0	func_sel	R/W	1h	Function select

6.2.9.58 PADCF_cfg_reg Register (Offset = E4h) [reset = C1h]

PADCF_cfg_reg is shown in and described in .

Return to the Summary Table.

Figure 6-1603. PADCF_cfg_reg Register

31	30	29	28	27	26	25	24
NU							
R/W-0h							
23	22	21	20	19	18	17	16
NU							
R/W-0h							
15	14	13	12	11	10	9	8
NU					sc1	pupdsel	pi
R/W-0h					R/W-0h	R/W-0h	R/W-0h
7	6	5	4	3	2	1	0
oe_override	oe_override_ctrl	ie_override	ie_override_ctrl	func_sel			
R/W-1h	R/W-1h	R/W-0h	R/W-0h	R/W-1h			

Table 6-1612. PADCF_cfg_reg Register Field Descriptions

Bit	Field	Type	Reset	Description
31-11	NU	R/W	0h	Reserved
10	sc1	R/W	0h	IO Slew rate control : 0 : higher slew rate. 1: Lower slew rate.
9	pupdsel	R/W	0h	Pullup/PullDown Selection 0 -- Pull Down
8	pi	R/W	0h	Pull Enable/Pull Disable 0 -- Enable
7	oe_override	R/W	1h	Active Low Output Override
6	oe_override_ctrl	R/W	1h	Active Low Output Override Control : Write 1 to select Active low Output Override value to control IOs OE_N/GZ instead of the control from hardware
5	ie_override	R/W	0h	Active Low Input Override
4	ie_override_ctrl	R/W	0h	Active Low Input Override Control : Write 1 to select Active low Input Override value to control IOs IE_N/RXACTIVE_N instead of the control from hardware
3-0	func_sel	R/W	1h	Function select

6.2.9.59 PADCG_cfg_reg Register (Offset = E8h) [reset = C1h]

PADCG_cfg_reg is shown in and described in .

Copyright © 2025 Texas Instruments Incorporated

Return to the Summary Table.

Figure 6-1604. PADCG_cfg_reg Register

31	30	29	28	27	26	25	24
NU							
R/W-0h							
23	22	21	20	19	18	17	16
NU							
R/W-0h							
15	14	13	12	11	10	9	8
NU					sc1	pupdsel	pi
R/W-0h					R/W-0h	R/W-0h	R/W-0h
7	6	5	4	3	2	1	0
oe_override	oe_override_ctrl	ie_override	ie_override_ctrl	func_sel			
R/W-1h	R/W-1h	R/W-0h	R/W-0h	R/W-1h			

Table 6-1613. PADCG_cfg_reg Register Field Descriptions

Bit	Field	Type	Reset	Description
31-11	NU	R/W	0h	Reserved
10	sc1	R/W	0h	IO Slew rate control : 0 : higher slew rate. 1: Lower slew rate.
9	pupdsel	R/W	0h	Pullup/PullDown Selection 0 -- Pull Down
8	pi	R/W	0h	Pull Enable/Pull Disable 0 -- Enable
7	oe_override	R/W	1h	Active Low Output Override
6	oe_override_ctrl	R/W	1h	Active Low Output Override Control : Write 1 to select Active low Output Override value to control IOs OE_N/GZ instead of the control from hardware
5	ie_override	R/W	0h	Active Low Input Override
4	ie_override_ctrl	R/W	0h	Active Low Input Override Control : Write 1 to select Active low Input Override value to control IOs IE_N/RXACTIVE_N instead of the control from hardware
3-0	func_sel	R/W	1h	Function select

6.2.9.60 PADCH_cfg_reg Register (Offset = ECh) [reset = C1h]

PADCH_cfg_reg is shown in and described in .

Return to the Summary Table.

Figure 6-1605. PADCH_cfg_reg Register

31	30	29	28	27	26	25	24
NU							
R/W-0h							
23	22	21	20	19	18	17	16
NU							
R/W-0h							
15	14	13	12	11	10	9	8
NU					sc1	pupdsel	pi
R/W-0h					R/W-0h	R/W-0h	R/W-0h

Copyright © 2025 Texas Instruments Incorporated

Figure 6-1605. PADCH_cfg_reg Register (continued)

7	6	5	4	3	2	1	0
oe_override	oe_override_ctrl	ie_override	ie_override_ctrl	func_sel			
R/W-1h	R/W-1h	R/W-0h	R/W-0h	R/W-1h			

Table 6-1614. PADCH_cfg_reg Register Field Descriptions

Bit	Field	Type	Reset	Description
31-11	NU	R/W	0h	Reserved
10	sc1	R/W	0h	IO Slew rate control : 0 : higher slew rate. 1: Lower slew rate.
9	pupdsel	R/W	0h	Pullup/PullDown Selection 0 -- Pull Down
8	pi	R/W	0h	Pull Enable/Pull Disable 0 -- Enable
7	oe_override	R/W	1h	Active Low Output Override
6	oe_override_ctrl	R/W	1h	Active Low Output Override Control : Write 1 to select Active low Output Override value to control IOs OE_N/GZ instead of the control from hardware
5	ie_override	R/W	0h	Active Low Input Override
4	ie_override_ctrl	R/W	0h	Active Low Input Override Control : Write 1 to select Active low Input Override value to control IOs IE_N/RXACTIVE_N instead of the control from hardware
3-0	func_sel	R/W	1h	Function select

6.2.9.61 PADCI_cfg_reg Register (Offset = F0h) [reset = C1h]

PADCI_cfg_reg is shown in and described in .

Return to the Summary Table.

Figure 6-1606. PADCI_cfg_reg Register

31	30	29	28	27	26	25	24
NU							
R/W-0h							
23	22	21	20	19	18	17	16
NU							
R/W-0h							
15	14	13	12	11	10	9	8
NU					sc1	pupdsel	pi
R/W-0h					R/W-0h	R/W-0h	R/W-0h
7	6	5	4	3	2	1	0
oe_override	oe_override_ctrl	ie_override	ie_override_ctrl	func_sel			
R/W-1h	R/W-1h	R/W-0h	R/W-0h	R/W-1h			

Table 6-1615. PADCI_cfg_reg Register Field Descriptions

Bit	Field	Type	Reset	Description
31-11	NU	R/W	0h	Reserved
10	sc1	R/W	0h	IO Slew rate control : 0 : higher slew rate. 1: Lower slew rate.
9	pupdsel	R/W	0h	Pullup/PullDown Selection 0 -- Pull Down
8	pi	R/W	0h	Pull Enable/Pull Disable 0 -- Enable
7	oe_override	R/W	1h	Active Low Output Override

Copyright © 2025 Texas Instruments Incorporated

Table 6-1615. PADCI_cfg_reg Register Field Descriptions (continued)

Bit	Field	Type	Reset	Description
6	oe_override_ctrl	R/W	1h	Active Low Output Override Control : Write 1 to select Active low Output Override value to control IOs OE_N/GZ instead of the control from hardware
5	ie_override	R/W	0h	Active Low Input Override
4	ie_override_ctrl	R/W	0h	Active Low Input Override Control : Write 1 to select Active low Input Override value to control IOs IE_N/RXACTIVE_N instead of the control from hardware
3-0	func_sel	R/W	1h	Function select

6.2.9.62 PADCJ_cfg_reg Register (Offset = F4h) [reset = C1h]

PADCJ_cfg_reg is shown in and described in .

Return to the Summary Table.

Figure 6-1607. PADCJ_cfg_reg Register

31	30	29	28	27	26	25	24
NU							
R/W-0h							
23	22	21	20	19	18	17	16
NU							
R/W-0h							
15	14	13	12	11	10	9	8
NU					sc1	pupdsel	pi
R/W-0h					R/W-0h	R/W-0h	R/W-0h
7	6	5	4	3	2	1	0
oe_override	oe_override_ctrl	ie_override	ie_override_ctrl	func_sel			
R/W-1h	R/W-1h	R/W-0h	R/W-0h	R/W-1h			

Table 6-1616. PADCJ_cfg_reg Register Field Descriptions

Bit	Field	Type	Reset	Description
31-11	NU	R/W	0h	Reserved
10	sc1	R/W	0h	IO Slew rate control : 0 : higher slew rate. 1: Lower slew rate.
9	pupdsel	R/W	0h	Pullup/PullDown Selection 0 -- Pull Down
8	pi	R/W	0h	Pull Enable/Pull Disable 0 -- Enable
7	oe_override	R/W	1h	Active Low Output Override
6	oe_override_ctrl	R/W	1h	Active Low Output Override Control : Write 1 to select Active low Output Override value to control IOs OE_N/GZ instead of the control from hardware
5	ie_override	R/W	0h	Active Low Input Override
4	ie_override_ctrl	R/W	0h	Active Low Input Override Control : Write 1 to select Active low Input Override value to control IOs IE_N/RXACTIVE_N instead of the control from hardware
3-0	func_sel	R/W	1h	Function select

6.2.9.63 PADCK_cfg_reg Register (Offset = F8h) [reset = C1h]

PADCK_cfg_reg is shown in and described in .

Copyright © 2025 Texas Instruments Incorporated

Return to the Summary Table.

Figure 6-1608. PADCK_cfg_reg Register

31	30	29	28	27	26	25	24
NU							
R/W-0h							
23	22	21	20	19	18	17	16
NU							
R/W-0h							
15	14	13	12	11	10	9	8
NU					sc1	pupdsel	pi
R/W-0h					R/W-0h	R/W-0h	R/W-0h
7	6	5	4	3	2	1	0
oe_override	oe_override_ctrl	ie_override	ie_override_ctrl	func_sel			
R/W-1h	R/W-1h	R/W-0h	R/W-0h	R/W-1h			

Table 6-1617. PADCK_cfg_reg Register Field Descriptions

Bit	Field	Type	Reset	Description
31-11	NU	R/W	0h	Reserved
10	sc1	R/W	0h	IO Slew rate control : 0 : higher slew rate. 1: Lower slew rate.
9	pupdsel	R/W	0h	Pullup/PullDown Selection 0 -- Pull Down
8	pi	R/W	0h	Pull Enable/Pull Disable 0 -- Enable
7	oe_override	R/W	1h	Active Low Output Override
6	oe_override_ctrl	R/W	1h	Active Low Output Override Control : Write 1 to select Active low Output Override value to control IOs OE_N/GZ instead of the control from hardware
5	ie_override	R/W	0h	Active Low Input Override
4	ie_override_ctrl	R/W	0h	Active Low Input Override Control : Write 1 to select Active low Input Override value to control IOs IE_N/RXACTIVE_N instead of the control from hardware
3-0	func_sel	R/W	1h	Function select

6.2.9.64 PADCL_cfg_reg Register (Offset = FCh) [reset = C1h]

PADCL_cfg_reg is shown in and described in .

Return to the Summary Table.

Figure 6-1609. PADCL_cfg_reg Register

31	30	29	28	27	26	25	24
NU							
R/W-0h							
23	22	21	20	19	18	17	16
NU							
R/W-0h							
15	14	13	12	11	10	9	8
NU					sc1	pupdsel	pi
R/W-0h					R/W-0h	R/W-0h	R/W-0h

Copyright © 2025 Texas Instruments Incorporated

Figure 6-1609. PADCL_cfg_reg Register (continued)

7	6	5	4	3	2	1	0
oe_override	oe_override_ctrl	ie_override	ie_override_ctrl	func_sel			
R/W-1h	R/W-1h	R/W-0h	R/W-0h	R/W-1h			

Table 6-1618. PADCL_cfg_reg Register Field Descriptions

Bit	Field	Type	Reset	Description
31-11	NU	R/W	0h	Reserved
10	sc1	R/W	0h	IO Slew rate control : 0 : higher slew rate. 1: Lower slew rate.
9	pupdsel	R/W	0h	Pullup/PullDown Selection 0 -- Pull Down
8	pi	R/W	0h	Pull Enable/Pull Disable 0 -- Enable
7	oe_override	R/W	1h	Active Low Output Override
6	oe_override_ctrl	R/W	1h	Active Low Output Override Control : Write 1 to select Active low Output Override value to control IOs OE_N/GZ instead of the control from hardware
5	ie_override	R/W	0h	Active Low Input Override
4	ie_override_ctrl	R/W	0h	Active Low Input Override Control : Write 1 to select Active low Input Override value to control IOs IE_N/RXACTIVE_N instead of the control from hardware
3-0	func_sel	R/W	1h	Function select

6.2.9.65 PADCM_cfg_reg Register (Offset = 100h) [reset = 2C1h]

PADCM_cfg_reg is shown in and described in .

Return to the Summary Table.

Figure 6-1610. PADCM_cfg_reg Register

31	30	29	28	27	26	25	24
NU							
R/W-0h							
23	22	21	20	19	18	17	16
NU							
R/W-0h							
15	14	13	12	11	10	9	8
NU					sc1	pupdsel	pi
R/W-0h					R/W-0h	R/W-1h	R/W-0h
7	6	5	4	3	2	1	0
oe_override	oe_override_ctrl	ie_override	ie_override_ctrl	func_sel			
R/W-1h	R/W-1h	R/W-0h	R/W-0h	R/W-1h			

Table 6-1619. PADCM_cfg_reg Register Field Descriptions

Bit	Field	Type	Reset	Description
31-11	NU	R/W	0h	Reserved
10	sc1	R/W	0h	IO Slew rate control : 0 : higher slew rate. 1: Lower slew rate.
9	pupdsel	R/W	1h	Pullup/PullDown Selection 0 -- Pull Down
8	pi	R/W	0h	Pull Enable/Pull Disable 0 -- Enable
7	oe_override	R/W	1h	Active Low Output Override

Copyright © 2025 Texas Instruments Incorporated

Table 6-1619. PADCM_cfg_reg Register Field Descriptions (continued)

Bit	Field	Type	Reset	Description
6	oe_override_ctrl	R/W	1h	Active Low Output Override Control : Write 1 to select Active low Output Override value to control IOs OE_N/GZ instead of the control from hardware
5	ie_override	R/W	0h	Active Low Input Override
4	ie_override_ctrl	R/W	0h	Active Low Input Override Control : Write 1 to select Active low Input Override value to control IOs IE_N/RXACTIVE_N instead of the control from hardware
3-0	func_sel	R/W	1h	Function select

6.2.9.66 PADCN_cfg_reg Register (Offset = 104h) [reset = 2C1h]

PADCN_cfg_reg is shown in and described in .

Return to the Summary Table.

Figure 6-1611. PADCN_cfg_reg Register

31	30	29	28	27	26	25	24
NU							
R/W-0h							
23	22	21	20	19	18	17	16
NU							
R/W-0h							
15	14	13	12	11	10	9	8
NU					sc1	pupdsel	pi
R/W-0h					R/W-0h	R/W-1h	R/W-0h
7	6	5	4	3	2	1	0
oe_override	oe_override_ctrl	ie_override	ie_override_ctrl	func_sel			
R/W-1h	R/W-1h	R/W-0h	R/W-0h	R/W-1h			

Table 6-1620. PADCN_cfg_reg Register Field Descriptions

Bit	Field	Type	Reset	Description
31-11	NU	R/W	0h	Reserved
10	sc1	R/W	0h	IO Slew rate control : 0 : higher slew rate. 1: Lower slew rate.
9	pupdsel	R/W	1h	Pullup/PullDown Selection 0 -- Pull Down
8	pi	R/W	0h	Pull Enable/Pull Disable 0 -- Enable
7	oe_override	R/W	1h	Active Low Output Override
6	oe_override_ctrl	R/W	1h	Active Low Output Override Control : Write 1 to select Active low Output Override value to control IOs OE_N/GZ instead of the control from hardware
5	ie_override	R/W	0h	Active Low Input Override
4	ie_override_ctrl	R/W	0h	Active Low Input Override Control : Write 1 to select Active low Input Override value to control IOs IE_N/RXACTIVE_N instead of the control from hardware
3-0	func_sel	R/W	1h	Function select

6.2.9.67 PADCO_cfg_reg Register (Offset = 108h) [reset = 2C1h]

PADCO_cfg_reg is shown in and described in .

Copyright © 2025 Texas Instruments Incorporated

Return to the Summary Table.

Figure 6-1612. PADCO_cfg_reg Register

31	30	29	28	27	26	25	24
NU							
R/W-0h							
23	22	21	20	19	18	17	16
NU							
R/W-0h							
15	14	13	12	11	10	9	8
NU					sc1	pupdsel	pi
R/W-0h					R/W-0h	R/W-1h	R/W-0h
7	6	5	4	3	2	1	0
oe_override	oe_override_ctrl	ie_override	ie_override_ctrl	func_sel			
R/W-1h	R/W-1h	R/W-0h	R/W-0h	R/W-1h			

Table 6-1621. PADCO_cfg_reg Register Field Descriptions

Bit	Field	Type	Reset	Description
31-11	NU	R/W	0h	Reserved
10	sc1	R/W	0h	IO Slew rate control : 0 : higher slew rate. 1: Lower slew rate.
9	pupdsel	R/W	1h	Pullup/PullDown Selection 0 -- Pull Down
8	pi	R/W	0h	Pull Enable/Pull Disable 0 -- Enable
7	oe_override	R/W	1h	Active Low Output Override
6	oe_override_ctrl	R/W	1h	Active Low Output Override Control : Write 1 to select Active low Output Override value to control IOs OE_N/GZ instead of the control from hardware
5	ie_override	R/W	0h	Active Low Input Override
4	ie_override_ctrl	R/W	0h	Active Low Input Override Control : Write 1 to select Active low Input Override value to control IOs IE_N/RXACTIVE_N instead of the control from hardware
3-0	func_sel	R/W	1h	Function select

6.2.9.68 PADCP_cfg_reg Register (Offset = 10Ch) [reset = 2C1h]

PADCP_cfg_reg is shown in and described in .

Return to the Summary Table.

Figure 6-1613. PADCP_cfg_reg Register

31	30	29	28	27	26	25	24
NU							
R/W-0h							
23	22	21	20	19	18	17	16
NU							
R/W-0h							
15	14	13	12	11	10	9	8
NU					sc1	pupdsel	pi
R/W-0h					R/W-0h	R/W-1h	R/W-0h

Copyright © 2025 Texas Instruments Incorporated

Figure 6-1613. PADCP_cfg_reg Register (continued)

7	6	5	4	3	2	1	0
oe_override	oe_override_ctrl	ie_override	ie_override_ctrl	func_sel			
R/W-1h	R/W-1h	R/W-0h	R/W-0h	R/W-1h			

Table 6-1622. PADCP_cfg_reg Register Field Descriptions

Bit	Field	Type	Reset	Description
31-11	NU	R/W	0h	Reserved
10	sc1	R/W	0h	IO Slew rate control : 0 : higher slew rate. 1: Lower slew rate.
9	pupdsel	R/W	1h	Pullup/PullDown Selection 0 -- Pull Down
8	pi	R/W	0h	Pull Enable/Pull Disable 0 -- Enable
7	oe_override	R/W	1h	Active Low Output Override
6	oe_override_ctrl	R/W	1h	Active Low Output Override Control : Write 1 to select Active low Output Override value to control IOs OE_N/GZ instead of the control from hardware
5	ie_override	R/W	0h	Active Low Input Override
4	ie_override_ctrl	R/W	0h	Active Low Input Override Control : Write 1 to select Active low Input Override value to control IOs IE_N/RXACTIVE_N instead of the control from hardware
3-0	func_sel	R/W	1h	Function select

6.2.9.69 PADCQ_cfg_reg Register (Offset = 110h) [reset = 2C1h]

PADCQ_cfg_reg is shown in and described in .

Return to the Summary Table.

Figure 6-1614. PADCQ_cfg_reg Register

31	30	29	28	27	26	25	24
NU							
R/W-0h							
23	22	21	20	19	18	17	16
NU							
R/W-0h							
15	14	13	12	11	10	9	8
NU					sc1	pupdsel	pi
R/W-0h					R/W-0h	R/W-1h	R/W-0h
7	6	5	4	3	2	1	0
oe_override	oe_override_ctrl	ie_override	ie_override_ctrl	func_sel			
R/W-1h	R/W-1h	R/W-0h	R/W-0h	R/W-1h			

Table 6-1623. PADCQ_cfg_reg Register Field Descriptions

Bit	Field	Type	Reset	Description
31-11	NU	R/W	0h	Reserved
10	sc1	R/W	0h	IO Slew rate control : 0 : higher slew rate. 1: Lower slew rate.
9	pupdsel	R/W	1h	Pullup/PullDown Selection 0 -- Pull Down
8	pi	R/W	0h	Pull Enable/Pull Disable 0 -- Enable
7	oe_override	R/W	1h	Active Low Output Override

Copyright © 2025 Texas Instruments Incorporated

Table 6-1623. PADCQ_cfg_reg Register Field Descriptions (continued)

Bit	Field	Type	Reset	Description
6	oe_override_ctrl	R/W	1h	Active Low Output Override Control : Write 1 to select Active low Output Override value to control IOs OE_N/GZ instead of the control from hardware
5	ie_override	R/W	0h	Active Low Input Override
4	ie_override_ctrl	R/W	0h	Active Low Input Override Control : Write 1 to select Active low Input Override value to control IOs IE_N/RXACTIVE_N instead of the control from hardware
3-0	func_sel	R/W	1h	Function select

6.2.9.70 PADCR_cfg_reg Register (Offset = 114h) [reset = 2C1h]

PADCR_cfg_reg is shown in and described in .

Return to the Summary Table.

Figure 6-1615. PADCR_cfg_reg Register

31	30	29	28	27	26	25	24
NU							
R/W-0h							
23	22	21	20	19	18	17	16
NU							
R/W-0h							
15	14	13	12	11	10	9	8
NU					sc1	pupdsel	pi
R/W-0h					R/W-0h	R/W-1h	R/W-0h
7	6	5	4	3	2	1	0
oe_override	oe_override_ctrl	ie_override	ie_override_ctrl	func_sel			
R/W-1h	R/W-1h	R/W-0h	R/W-0h	R/W-1h			

Table 6-1624. PADCR_cfg_reg Register Field Descriptions

Bit	Field	Type	Reset	Description
31-11	NU	R/W	0h	Reserved
10	sc1	R/W	0h	IO Slew rate control : 0 : higher slew rate. 1: Lower slew rate.
9	pupdsel	R/W	1h	Pullup/PullDown Selection 0 -- Pull Down
8	pi	R/W	0h	Pull Enable/Pull Disable 0 -- Enable
7	oe_override	R/W	1h	Active Low Output Override
6	oe_override_ctrl	R/W	1h	Active Low Output Override Control : Write 1 to select Active low Output Override value to control IOs OE_N/GZ instead of the control from hardware
5	ie_override	R/W	0h	Active Low Input Override
4	ie_override_ctrl	R/W	0h	Active Low Input Override Control : Write 1 to select Active low Input Override value to control IOs IE_N/RXACTIVE_N instead of the control from hardware
3-0	func_sel	R/W	1h	Function select

6.2.9.71 PADCS_cfg_reg Register (Offset = 118h) [reset = C1h]

PADCS_cfg_reg is shown in and described in .

Copyright © 2025 Texas Instruments Incorporated

Return to the Summary Table.

Figure 6-1616. PADCS_cfg_reg Register

31	30	29	28	27	26	25	24
NU							
R/W-0h							
23	22	21	20	19	18	17	16
NU							
R/W-0h							
15	14	13	12	11	10	9	8
NU					sc1	pupdsel	pi
R/W-0h					R/W-0h	R/W-0h	R/W-0h
7	6	5	4	3	2	1	0
oe_override	oe_override_ctrl	ie_override	ie_override_ctrl	func_sel			
R/W-1h	R/W-1h	R/W-0h	R/W-0h	R/W-1h			

Table 6-1625. PADCS_cfg_reg Register Field Descriptions

Bit	Field	Type	Reset	Description
31-11	NU	R/W	0h	Reserved
10	sc1	R/W	0h	IO Slew rate control : 0 : higher slew rate. 1: Lower slew rate.
9	pupdsel	R/W	0h	Pullup/PullDown Selection 0 -- Pull Down
8	pi	R/W	0h	Pull Enable/Pull Disable 0 -- Enable
7	oe_override	R/W	1h	Active Low Output Override
6	oe_override_ctrl	R/W	1h	Active Low Output Override Control : Write 1 to select Active low Output Override value to control IOs OE_N/GZ instead of the control from hardware
5	ie_override	R/W	0h	Active Low Input Override
4	ie_override_ctrl	R/W	0h	Active Low Input Override Control : Write 1 to select Active low Input Override value to control IOs IE_N/RXACTIVE_N instead of the control from hardware
3-0	func_sel	R/W	1h	Function select

6.2.9.72 PADCT_cfg_reg Register (Offset = 11Ch) [reset = 2C1h]

PADCT_cfg_reg is shown in and described in .

Return to the Summary Table.

Figure 6-1617. PADCT_cfg_reg Register

31	30	29	28	27	26	25	24
NU							
R/W-0h							
23	22	21	20	19	18	17	16
NU							
R/W-0h							
15	14	13	12	11	10	9	8
NU					sc1	pupdsel	pi
R/W-0h					R/W-0h	R/W-1h	R/W-0h

Copyright © 2025 Texas Instruments Incorporated

Figure 6-1617. PADCT_cfg_reg Register (continued)

7	6	5	4	3	2	1	0
oe_override	oe_override_ctrl	ie_override	ie_override_ctrl	func_sel			
R/W-1h	R/W-1h	R/W-0h	R/W-0h	R/W-1h			

Table 6-1626. PADCT_cfg_reg Register Field Descriptions

Bit	Field	Type	Reset	Description
31-11	NU	R/W	0h	Reserved
10	sc1	R/W	0h	IO Slew rate control : 0 : higher slew rate. 1: Lower slew rate.
9	pupdsel	R/W	1h	Pullup/PullDown Selection 0 -- Pull Down
8	pi	R/W	0h	Pull Enable/Pull Disable 0 -- Enable
7	oe_override	R/W	1h	Active Low Output Override
6	oe_override_ctrl	R/W	1h	Active Low Output Override Control : Write 1 to select Active low Output Override value to control IOs OE_N/GZ instead of the control from hardware
5	ie_override	R/W	0h	Active Low Input Override
4	ie_override_ctrl	R/W	0h	Active Low Input Override Control : Write 1 to select Active low Input Override value to control IOs IE_N/RXACTIVE_N instead of the control from hardware
3-0	func_sel	R/W	1h	Function select

6.2.9.73 PADCU_cfg_reg Register (Offset = 120h) [reset = 2C1h]

PADCU_cfg_reg is shown in and described in .

Return to the Summary Table.

Figure 6-1618. PADCU_cfg_reg Register

31	30	29	28	27	26	25	24
NU							
R/W-0h							
23	22	21	20	19	18	17	16
NU							
R/W-0h							
15	14	13	12	11	10	9	8
NU					sc1	pupdsel	pi
R/W-0h					R/W-0h	R/W-1h	R/W-0h
7	6	5	4	3	2	1	0
oe_override	oe_override_ctrl	ie_override	ie_override_ctrl	func_sel			
R/W-1h	R/W-1h	R/W-0h	R/W-0h	R/W-1h			

Table 6-1627. PADCU_cfg_reg Register Field Descriptions

Bit	Field	Type	Reset	Description
31-11	NU	R/W	0h	Reserved
10	sc1	R/W	0h	IO Slew rate control : 0 : higher slew rate. 1: Lower slew rate.
9	pupdsel	R/W	1h	Pullup/PullDown Selection 0 -- Pull Down
8	pi	R/W	0h	Pull Enable/Pull Disable 0 -- Enable
7	oe_override	R/W	1h	Active Low Output Override

Copyright © 2025 Texas Instruments Incorporated

Table 6-1627. PADCU_cfg_reg Register Field Descriptions (continued)

Bit	Field	Type	Reset	Description
6	oe_override_ctrl	R/W	1h	Active Low Output Override Control : Write 1 to select Active low Output Override value to control IOs OE_N/GZ instead of the control from hardware
5	ie_override	R/W	0h	Active Low Input Override
4	ie_override_ctrl	R/W	0h	Active Low Input Override Control : Write 1 to select Active low Input Override value to control IOs IE_N/RXACTIVE_N instead of the control from hardware
3-0	func_sel	R/W	1h	Function select

6.2.9.74 PADCV_cfg_reg Register (Offset = 124h) [reset = 2C1h]

PADCV_cfg_reg is shown in and described in .

Return to the Summary Table.

Figure 6-1619. PADCV_cfg_reg Register

31	30	29	28	27	26	25	24
NU							
R/W-0h							
23	22	21	20	19	18	17	16
NU							
R/W-0h							
15	14	13	12	11	10	9	8
NU					sc1	pupdsel	pi
R/W-0h					R/W-0h	R/W-1h	R/W-0h
7	6	5	4	3	2	1	0
oe_override	oe_override_ctrl	ie_override	ie_override_ctrl	func_sel			
R/W-1h	R/W-1h	R/W-0h	R/W-0h	R/W-1h			

Table 6-1628. PADCV_cfg_reg Register Field Descriptions

Bit	Field	Type	Reset	Description
31-11	NU	R/W	0h	Reserved
10	sc1	R/W	0h	IO Slew rate control : 0 : higher slew rate. 1: Lower slew rate.
9	pupdsel	R/W	1h	Pullup/PullDown Selection 0 -- Pull Down
8	pi	R/W	0h	Pull Enable/Pull Disable 0 -- Enable
7	oe_override	R/W	1h	Active Low Output Override
6	oe_override_ctrl	R/W	1h	Active Low Output Override Control : Write 1 to select Active low Output Override value to control IOs OE_N/GZ instead of the control from hardware
5	ie_override	R/W	0h	Active Low Input Override
4	ie_override_ctrl	R/W	0h	Active Low Input Override Control : Write 1 to select Active low Input Override value to control IOs IE_N/RXACTIVE_N instead of the control from hardware
3-0	func_sel	R/W	1h	Function select

6.2.9.75 PADCW_cfg_reg Register (Offset = 128h) [reset = 2C1h]

PADCW_cfg_reg is shown in and described in .

Copyright © 2025 Texas Instruments Incorporated

Return to the Summary Table.

Figure 6-1620. PADCW_cfg_reg Register

31	30	29	28	27	26	25	24
NU							
R/W-0h							
23	22	21	20	19	18	17	16
NU							
R/W-0h							
15	14	13	12	11	10	9	8
NU					sc1	pupdsel	pi
R/W-0h					R/W-0h	R/W-1h	R/W-0h
7	6	5	4	3	2	1	0
oe_override	oe_override_ctrl	ie_override	ie_override_ctrl	func_sel			
R/W-1h	R/W-1h	R/W-0h	R/W-0h	R/W-1h			

Table 6-1629. PADCW_cfg_reg Register Field Descriptions

Bit	Field	Type	Reset	Description
31-11	NU	R/W	0h	Reserved
10	sc1	R/W	0h	IO Slew rate control : 0 : higher slew rate. 1: Lower slew rate.
9	pupdsel	R/W	1h	Pullup/PullDown Selection 0 -- Pull Down
8	pi	R/W	0h	Pull Enable/Pull Disable 0 -- Enable
7	oe_override	R/W	1h	Active Low Output Override
6	oe_override_ctrl	R/W	1h	Active Low Output Override Control : Write 1 to select Active low Output Override value to control IOs OE_N/GZ instead of the control from hardware
5	ie_override	R/W	0h	Active Low Input Override
4	ie_override_ctrl	R/W	0h	Active Low Input Override Control : Write 1 to select Active low Input Override value to control IOs IE_N/RXACTIVE_N instead of the control from hardware
3-0	func_sel	R/W	1h	Function select

6.2.9.76 PADCX_cfg_reg Register (Offset = 12Ch) [reset = C1h]

PADCX_cfg_reg is shown in and described in .

Return to the Summary Table.

Figure 6-1621. PADCX_cfg_reg Register

31	30	29	28	27	26	25	24
NU							
R/W-0h							
23	22	21	20	19	18	17	16
NU							
R/W-0h							
15	14	13	12	11	10	9	8
NU					sc1	pupdsel	pi
R/W-0h					R/W-0h	R/W-0h	R/W-0h

Copyright © 2025 Texas Instruments Incorporated

Figure 6-1621. PADCX_cfg_reg Register (continued)

7	6	5	4	3	2	1	0
oe_override	oe_override_ctrl	ie_override	ie_override_ctrl	func_sel			
R/W-1h	R/W-1h	R/W-0h	R/W-0h	R/W-1h			

Table 6-1630. PADCX_cfg_reg Register Field Descriptions

Bit	Field	Type	Reset	Description
31-11	NU	R/W	0h	Reserved
10	sc1	R/W	0h	IO Slew rate control : 0 : higher slew rate. 1: Lower slew rate.
9	pupdsel	R/W	0h	Pullup/PullDown Selection 0 -- Pull Down
8	pi	R/W	0h	Pull Enable/Pull Disable 0 -- Enable
7	oe_override	R/W	1h	Active Low Output Override
6	oe_override_ctrl	R/W	1h	Active Low Output Override Control : Write 1 to select Active low Output Override value to control IOs OE_N/GZ instead of the control from hardware
5	ie_override	R/W	0h	Active Low Input Override
4	ie_override_ctrl	R/W	0h	Active Low Input Override Control : Write 1 to select Active low Input Override value to control IOs IE_N/RXACTIVE_N instead of the control from hardware
3-0	func_sel	R/W	1h	Function select

6.2.9.77 PADCY_cfg_reg Register (Offset = 130h) [reset = C1h]

PADCY_cfg_reg is shown in and described in .

Return to the Summary Table.

Figure 6-1622. PADCY_cfg_reg Register

31	30	29	28	27	26	25	24
NU							
R/W-0h							
23	22	21	20	19	18	17	16
NU							
R/W-0h							
15	14	13	12	11	10	9	8
NU					sc1	pupdsel	pi
R/W-0h					R/W-0h	R/W-0h	R/W-0h
7	6	5	4	3	2	1	0
oe_override	oe_override_ctrl	ie_override	ie_override_ctrl	func_sel			
R/W-1h	R/W-1h	R/W-0h	R/W-0h	R/W-1h			

Table 6-1631. PADCY_cfg_reg Register Field Descriptions

Bit	Field	Type	Reset	Description
31-11	NU	R/W	0h	Reserved
10	sc1	R/W	0h	IO Slew rate control : 0 : higher slew rate. 1: Lower slew rate.
9	pupdsel	R/W	0h	Pullup/PullDown Selection 0 -- Pull Down
8	pi	R/W	0h	Pull Enable/Pull Disable 0 -- Enable
7	oe_override	R/W	1h	Active Low Output Override

Copyright © 2025 Texas Instruments Incorporated

Table 6-1631. PADCY_cfg_reg Register Field Descriptions (continued)

Bit	Field	Type	Reset	Description
6	oe_override_ctrl	R/W	1h	Active Low Output Override Control : Write 1 to select Active low Output Override value to control IOs OE_N/GZ instead of the control from hardware
5	ie_override	R/W	0h	Active Low Input Override
4	ie_override_ctrl	R/W	0h	Active Low Input Override Control : Write 1 to select Active low Input Override value to control IOs IE_N/RXACTIVE_N instead of the control from hardware
3-0	func_sel	R/W	1h	Function select

6.2.9.78 PADCZ_cfg_reg Register (Offset = 134h) [reset = C1h]

PADCZ_cfg_reg is shown in and described in .

Return to the Summary Table.

Figure 6-1623. PADCZ_cfg_reg Register

31	30	29	28	27	26	25	24
NU							
R/W-0h							
23	22	21	20	19	18	17	16
NU							
R/W-0h							
15	14	13	12	11	10	9	8
NU					sc1	pupdsel	pi
R/W-0h					R/W-0h	R/W-0h	R/W-0h
7	6	5	4	3	2	1	0
oe_override	oe_override_ctrl	ie_override	ie_override_ctrl	func_sel			
R/W-1h	R/W-1h	R/W-0h	R/W-0h	R/W-1h			

Table 6-1632. PADCZ_cfg_reg Register Field Descriptions

Bit	Field	Type	Reset	Description
31-11	NU	R/W	0h	Reserved
10	sc1	R/W	0h	IO Slew rate control : 0 : higher slew rate. 1: Lower slew rate.
9	pupdsel	R/W	0h	Pullup/PullDown Selection 0 -- Pull Down
8	pi	R/W	0h	Pull Enable/Pull Disable 0 -- Enable
7	oe_override	R/W	1h	Active Low Output Override
6	oe_override_ctrl	R/W	1h	Active Low Output Override Control : Write 1 to select Active low Output Override value to control IOs OE_N/GZ instead of the control from hardware
5	ie_override	R/W	0h	Active Low Input Override
4	ie_override_ctrl	R/W	0h	Active Low Input Override Control : Write 1 to select Active low Input Override value to control IOs IE_N/RXACTIVE_N instead of the control from hardware
3-0	func_sel	R/W	1h	Function select

6.2.9.79 PADDA_cfg_reg Register (Offset = 138h) [reset = 2C1h]

PADDA_cfg_reg is shown in and described in .

Copyright © 2025 Texas Instruments Incorporated

Return to the Summary Table.

Figure 6-1624. PADDA_cfg_reg Register

31	30	29	28	27	26	25	24
NU							
R/W-0h							
23	22	21	20	19	18	17	16
NU							
R/W-0h							
15	14	13	12	11	10	9	8
NU					sc1	pupdsel	pi
R/W-0h					R/W-0h	R/W-1h	R/W-0h
7	6	5	4	3	2	1	0
oe_override	oe_override_ctrl	ie_override	ie_override_ctrl	func_sel			
R/W-1h	R/W-1h	R/W-0h	R/W-0h	R/W-1h			

Table 6-1633. PADDA_cfg_reg Register Field Descriptions

Bit	Field	Type	Reset	Description
31-11	NU	R/W	0h	Reserved
10	sc1	R/W	0h	IO Slew rate control : 0 : higher slew rate. 1: Lower slew rate.
9	pupdsel	R/W	1h	Pullup/PullDown Selection 0 -- Pull Down
8	pi	R/W	0h	Pull Enable/Pull Disable 0 -- Enable
7	oe_override	R/W	1h	Active Low Output Override
6	oe_override_ctrl	R/W	1h	Active Low Output Override Control : Write 1 to select Active low Output Override value to control IOs OE_N/GZ instead of the control from hardware
5	ie_override	R/W	0h	Active Low Input Override
4	ie_override_ctrl	R/W	0h	Active Low Input Override Control : Write 1 to select Active low Input Override value to control IOs IE_N/RXACTIVE_N instead of the control from hardware
3-0	func_sel	R/W	1h	Function select

6.2.9.80 PADDB_cfg_reg Register (Offset = 13Ch) [reset = 2C1h]

PADDB_cfg_reg is shown in and described in .

Return to the Summary Table.

Figure 6-1625. PADDB_cfg_reg Register

31	30	29	28	27	26	25	24
NU							
R/W-0h							
23	22	21	20	19	18	17	16
NU							
R/W-0h							
15	14	13	12	11	10	9	8
NU					sc1	pupdsel	pi
R/W-0h					R/W-0h	R/W-1h	R/W-0h

Copyright © 2025 Texas Instruments Incorporated

Figure 6-1625. PADDB_cfg_reg Register (continued)

7	6	5	4	3	2	1	0
oe_override	oe_override_ctrl	ie_override	ie_override_ctrl	func_sel			
R/W-1h	R/W-1h	R/W-0h	R/W-0h	R/W-1h			

Table 6-1634. PADDB_cfg_reg Register Field Descriptions

Bit	Field	Type	Reset	Description
31-11	NU	R/W	0h	Reserved
10	sc1	R/W	0h	IO Slew rate control : 0 : higher slew rate. 1: Lower slew rate.
9	pupdsel	R/W	1h	Pullup/PullDown Selection 0 -- Pull Down
8	pi	R/W	0h	Pull Enable/Pull Disable 0 -- Enable
7	oe_override	R/W	1h	Active Low Output Override
6	oe_override_ctrl	R/W	1h	Active Low Output Override Control : Write 1 to select Active low Output Override value to control IOs OE_N/GZ instead of the control from hardware
5	ie_override	R/W	0h	Active Low Input Override
4	ie_override_ctrl	R/W	0h	Active Low Input Override Control : Write 1 to select Active low Input Override value to control IOs IE_N/RXACTIVE_N instead of the control from hardware
3-0	func_sel	R/W	1h	Function select

6.2.9.81 PADDC_cfg_reg Register (Offset = 140h) [reset = 2C1h]

PADDC_cfg_reg is shown in and described in .

Return to the Summary Table.

Figure 6-1626. PADDC_cfg_reg Register

31	30	29	28	27	26	25	24
NU							
R/W-0h							
23	22	21	20	19	18	17	16
NU							
R/W-0h							
15	14	13	12	11	10	9	8
NU					sc1	pupdsel	pi
R/W-0h					R/W-0h	R/W-1h	R/W-0h
7	6	5	4	3	2	1	0
oe_override	oe_override_ctrl	ie_override	ie_override_ctrl	func_sel			
R/W-1h	R/W-1h	R/W-0h	R/W-0h	R/W-1h			

Table 6-1635. PADDC_cfg_reg Register Field Descriptions

Bit	Field	Type	Reset	Description
31-11	NU	R/W	0h	Reserved
10	sc1	R/W	0h	IO Slew rate control : 0 : higher slew rate. 1: Lower slew rate.
9	pupdsel	R/W	1h	Pullup/PullDown Selection 0 -- Pull Down
8	pi	R/W	0h	Pull Enable/Pull Disable 0 -- Enable
7	oe_override	R/W	1h	Active Low Output Override

Copyright © 2025 Texas Instruments Incorporated

Table 6-1635. PADDC_cfg_reg Register Field Descriptions (continued)

Bit	Field	Type	Reset	Description
6	oe_override_ctrl	R/W	1h	Active Low Output Override Control : Write 1 to select Active low Output Override value to control IOs OE_N/GZ instead of the control from hardware
5	ie_override	R/W	0h	Active Low Input Override
4	ie_override_ctrl	R/W	0h	Active Low Input Override Control : Write 1 to select Active low Input Override value to control IOs IE_N/RXACTIVE_N instead of the control from hardware
3-0	func_sel	R/W	1h	Function select

6.2.9.82 PADDD_cfg_reg Register (Offset = 144h) [reset = 2C1h]

PADDD_cfg_reg is shown in and described in .

Return to the Summary Table.

Figure 6-1627. PADDD_cfg_reg Register

31	30	29	28	27	26	25	24
NU							
R/W-0h							
23	22	21	20	19	18	17	16
NU							
R/W-0h							
15	14	13	12	11	10	9	8
NU					sc1	pupdsel	pi
R/W-0h					R/W-0h	R/W-1h	R/W-0h
7	6	5	4	3	2	1	0
oe_override	oe_override_ctrl	ie_override	ie_override_ctrl	func_sel			
R/W-1h	R/W-1h	R/W-0h	R/W-0h	R/W-1h			

Table 6-1636. PADDD_cfg_reg Register Field Descriptions

Bit	Field	Type	Reset	Description
31-11	NU	R/W	0h	Reserved
10	sc1	R/W	0h	IO Slew rate control : 0 : higher slew rate. 1: Lower slew rate.
9	pupdsel	R/W	1h	Pullup/PullDown Selection 0 -- Pull Down
8	pi	R/W	0h	Pull Enable/Pull Disable 0 -- Enable
7	oe_override	R/W	1h	Active Low Output Override
6	oe_override_ctrl	R/W	1h	Active Low Output Override Control : Write 1 to select Active low Output Override value to control IOs OE_N/GZ instead of the control from hardware
5	ie_override	R/W	0h	Active Low Input Override
4	ie_override_ctrl	R/W	0h	Active Low Input Override Control : Write 1 to select Active low Input Override value to control IOs IE_N/RXACTIVE_N instead of the control from hardware
3-0	func_sel	R/W	1h	Function select

6.2.9.83 PADDE_cfg_reg Register (Offset = 148h) [reset = 2C1h]

PADDE_cfg_reg is shown in and described in .

Copyright © 2025 Texas Instruments Incorporated

Return to the Summary Table.

Figure 6-1628. PADDE_cfg_reg Register

31	30	29	28	27	26	25	24
NU							
R/W-0h							
23	22	21	20	19	18	17	16
NU							
R/W-0h							
15	14	13	12	11	10	9	8
NU					sc1	pupdsel	pi
R/W-0h					R/W-0h	R/W-1h	R/W-0h
7	6	5	4	3	2	1	0
oe_override	oe_override_ctrl	ie_override	ie_override_ctrl	func_sel			
R/W-1h	R/W-1h	R/W-0h	R/W-0h	R/W-1h			

Table 6-1637. PADDE_cfg_reg Register Field Descriptions

Bit	Field	Type	Reset	Description
31-11	NU	R/W	0h	Reserved
10	sc1	R/W	0h	IO Slew rate control : 0 : higher slew rate. 1: Lower slew rate.
9	pupdsel	R/W	1h	Pullup/PullDown Selection 0 -- Pull Down
8	pi	R/W	0h	Pull Enable/Pull Disable 0 -- Enable
7	oe_override	R/W	1h	Active Low Output Override
6	oe_override_ctrl	R/W	1h	Active Low Output Override Control : Write 1 to select Active low Output Override value to control IOs OE_N/GZ instead of the control from hardware
5	ie_override	R/W	0h	Active Low Input Override
4	ie_override_ctrl	R/W	0h	Active Low Input Override Control : Write 1 to select Active low Input Override value to control IOs IE_N/RXACTIVE_N instead of the control from hardware
3-0	func_sel	R/W	1h	Function select

6.2.9.84 PADDF_cfg_reg Register (Offset = 14Ch) [reset = C1h]

PADDF_cfg_reg is shown in and described in .

Return to the Summary Table.

Figure 6-1629. PADDF_cfg_reg Register

31	30	29	28	27	26	25	24
NU							
R/W-0h							
23	22	21	20	19	18	17	16
NU							
R/W-0h							
15	14	13	12	11	10	9	8
NU					sc1	pupdsel	pi
R/W-0h					R/W-0h	R/W-0h	R/W-0h

Copyright © 2025 Texas Instruments Incorporated

Figure 6-1629. PADDF_cfg_reg Register (continued)

7	6	5	4	3	2	1	0
oe_override	oe_override_ctrl	ie_override	ie_override_ctrl	func_sel			
R/W-1h	R/W-1h	R/W-0h	R/W-0h	R/W-1h			

Table 6-1638. PADDF_cfg_reg Register Field Descriptions

Bit	Field	Type	Reset	Description
31-11	NU	R/W	0h	Reserved
10	sc1	R/W	0h	IO Slew rate control : 0 : higher slew rate. 1: Lower slew rate.
9	pupdsel	R/W	0h	Pullup/PullDown Selection 0 -- Pull Down
8	pi	R/W	0h	Pull Enable/Pull Disable 0 -- Enable
7	oe_override	R/W	1h	Active Low Output Override
6	oe_override_ctrl	R/W	1h	Active Low Output Override Control : Write 1 to select Active low Output Override value to control IOs OE_N/GZ instead of the control from hardware
5	ie_override	R/W	0h	Active Low Input Override
4	ie_override_ctrl	R/W	0h	Active Low Input Override Control : Write 1 to select Active low Input Override value to control IOs IE_N/RXACTIVE_N instead of the control from hardware
3-0	func_sel	R/W	1h	Function select

6.2.9.85 PADDG_cfg_reg Register (Offset = 150h) [reset = C1h]

PADDG_cfg_reg is shown in and described in .

Return to the Summary Table.

Figure 6-1630. PADDG_cfg_reg Register

31	30	29	28	27	26	25	24
NU							
R/W-0h							
23	22	21	20	19	18	17	16
NU							
R/W-0h							
15	14	13	12	11	10	9	8
NU					sc1	pupdsel	pi
R/W-0h					R/W-0h	R/W-0h	R/W-0h
7	6	5	4	3	2	1	0
oe_override	oe_override_ctrl	ie_override	ie_override_ctrl	func_sel			
R/W-1h	R/W-1h	R/W-0h	R/W-0h	R/W-1h			

Table 6-1639. PADDG_cfg_reg Register Field Descriptions

Bit	Field	Type	Reset	Description
31-11	NU	R/W	0h	Reserved
10	sc1	R/W	0h	IO Slew rate control : 0 : higher slew rate. 1: Lower slew rate.
9	pupdsel	R/W	0h	Pullup/PullDown Selection 0 -- Pull Down
8	pi	R/W	0h	Pull Enable/Pull Disable 0 -- Enable
7	oe_override	R/W	1h	Active Low Output Override

Copyright © 2025 Texas Instruments Incorporated

Table 6-1639. PADDG_cfg_reg Register Field Descriptions (continued)

Bit	Field	Type	Reset	Description
6	oe_override_ctrl	R/W	1h	Active Low Output Override Control : Write 1 to select Active low Output Override value to control IOs OE_N/GZ instead of the control from hardware
5	ie_override	R/W	0h	Active Low Input Override
4	ie_override_ctrl	R/W	0h	Active Low Input Override Control : Write 1 to select Active low Input Override value to control IOs IE_N/RXACTIVE_N instead of the control from hardware
3-0	func_sel	R/W	1h	Function select

6.2.9.86 PADDH_cfg_reg Register (Offset = 154h) [reset = 2C1h]

PADDH_cfg_reg is shown in and described in .

Return to the Summary Table.

Figure 6-1631. PADDH_cfg_reg Register

31	30	29	28	27	26	25	24
NU							
R/W-0h							
23	22	21	20	19	18	17	16
NU							
R/W-0h							
15	14	13	12	11	10	9	8
NU					sc1	pupdsel	pi
R/W-0h					R/W-0h	R/W-1h	R/W-0h
7	6	5	4	3	2	1	0
oe_override	oe_override_ctrl	ie_override	ie_override_ctrl	func_sel			
R/W-1h	R/W-1h	R/W-0h	R/W-0h	R/W-1h			

Table 6-1640. PADDH_cfg_reg Register Field Descriptions

Bit	Field	Type	Reset	Description
31-11	NU	R/W	0h	Reserved
10	sc1	R/W	0h	IO Slew rate control : 0 : higher slew rate. 1: Lower slew rate.
9	pupdsel	R/W	1h	Pullup/PullDown Selection 0 -- Pull Down
8	pi	R/W	0h	Pull Enable/Pull Disable 0 -- Enable
7	oe_override	R/W	1h	Active Low Output Override
6	oe_override_ctrl	R/W	1h	Active Low Output Override Control : Write 1 to select Active low Output Override value to control IOs OE_N/GZ instead of the control from hardware
5	ie_override	R/W	0h	Active Low Input Override
4	ie_override_ctrl	R/W	0h	Active Low Input Override Control : Write 1 to select Active low Input Override value to control IOs IE_N/RXACTIVE_N instead of the control from hardware
3-0	func_sel	R/W	1h	Function select

6.2.9.87 PADDI_cfg_reg Register (Offset = 158h) [reset = 2C1h]

PADDI_cfg_reg is shown in and described in .

Copyright © 2025 Texas Instruments Incorporated

Return to the Summary Table.

Figure 6-1632. PADDI_cfg_reg Register

31	30	29	28	27	26	25	24
NU							
R/W-0h							
23	22	21	20	19	18	17	16
NU							
R/W-0h							
15	14	13	12	11	10	9	8
NU					sc1	pupdsel	pi
R/W-0h					R/W-0h	R/W-1h	R/W-0h
7	6	5	4	3	2	1	0
oe_override	oe_override_ctrl	ie_override	ie_override_ctrl	func_sel			
R/W-1h	R/W-1h	R/W-0h	R/W-0h	R/W-1h			

Table 6-1641. PADDI_cfg_reg Register Field Descriptions

Bit	Field	Type	Reset	Description
31-11	NU	R/W	0h	Reserved
10	sc1	R/W	0h	IO Slew rate control : 0 : higher slew rate. 1: Lower slew rate.
9	pupdsel	R/W	1h	Pullup/PullDown Selection 0 -- Pull Down
8	pi	R/W	0h	Pull Enable/Pull Disable 0 -- Enable
7	oe_override	R/W	1h	Active Low Output Override
6	oe_override_ctrl	R/W	1h	Active Low Output Override Control : Write 1 to select Active low Output Override value to control IOs OE_N/GZ instead of the control from hardware
5	ie_override	R/W	0h	Active Low Input Override
4	ie_override_ctrl	R/W	0h	Active Low Input Override Control : Write 1 to select Active low Input Override value to control IOs IE_N/RXACTIVE_N instead of the control from hardware
3-0	func_sel	R/W	1h	Function select

6.2.9.88 PADDJ_cfg_reg Register (Offset = 15Ch) [reset = 2C1h]

PADDJ_cfg_reg is shown in and described in .

Return to the Summary Table.

Figure 6-1633. PADDJ_cfg_reg Register

31	30	29	28	27	26	25	24
NU							
R/W-0h							
23	22	21	20	19	18	17	16
NU							
R/W-0h							
15	14	13	12	11	10	9	8
NU					sc1	pupdsel	pi
R/W-0h					R/W-0h	R/W-1h	R/W-0h

Copyright © 2025 Texas Instruments Incorporated

Figure 6-1633. PADDJ_cfg_reg Register (continued)

7	6	5	4	3	2	1	0
oe_override	oe_override_ctrl	ie_override	ie_override_ctrl	func_sel			
R/W-1h	R/W-1h	R/W-0h	R/W-0h	R/W-1h			

Table 6-1642. PADDJ_cfg_reg Register Field Descriptions

Bit	Field	Type	Reset	Description
31-11	NU	R/W	0h	Reserved
10	sc1	R/W	0h	IO Slew rate control : 0 : higher slew rate. 1: Lower slew rate.
9	pupdsel	R/W	1h	Pullup/PullDown Selection 0 -- Pull Down
8	pi	R/W	0h	Pull Enable/Pull Disable 0 -- Enable
7	oe_override	R/W	1h	Active Low Output Override
6	oe_override_ctrl	R/W	1h	Active Low Output Override Control : Write 1 to select Active low Output Override value to control IOs OE_N/GZ instead of the control from hardware
5	ie_override	R/W	0h	Active Low Input Override
4	ie_override_ctrl	R/W	0h	Active Low Input Override Control : Write 1 to select Active low Input Override value to control IOs IE_N/RXACTIVE_N instead of the control from hardware
3-0	func_sel	R/W	1h	Function select

6.2.9.89 PADDK_cfg_reg Register (Offset = 160h) [reset = 2C1h]

PADDK_cfg_reg is shown in and described in .

Return to the Summary Table.

Figure 6-1634. PADDK_cfg_reg Register

31	30	29	28	27	26	25	24
NU							
R/W-0h							
23	22	21	20	19	18	17	16
NU							
R/W-0h							
15	14	13	12	11	10	9	8
NU					sc1	pupdsel	pi
R/W-0h					R/W-0h	R/W-1h	R/W-0h
7	6	5	4	3	2	1	0
oe_override	oe_override_ctrl	ie_override	ie_override_ctrl	func_sel			
R/W-1h	R/W-1h	R/W-0h	R/W-0h	R/W-1h			

Table 6-1643. PADDK_cfg_reg Register Field Descriptions

Bit	Field	Type	Reset	Description
31-11	NU	R/W	0h	Reserved
10	sc1	R/W	0h	IO Slew rate control : 0 : higher slew rate. 1: Lower slew rate.
9	pupdsel	R/W	1h	Pullup/PullDown Selection 0 -- Pull Down
8	pi	R/W	0h	Pull Enable/Pull Disable 0 -- Enable
7	oe_override	R/W	1h	Active Low Output Override

Copyright © 2025 Texas Instruments Incorporated

Table 6-1643. PADDK_cfg_reg Register Field Descriptions (continued)

Bit	Field	Type	Reset	Description
6	oe_override_ctrl	R/W	1h	Active Low Output Override Control : Write 1 to select Active low Output Override value to control IOs OE_N/GZ instead of the control from hardware
5	ie_override	R/W	0h	Active Low Input Override
4	ie_override_ctrl	R/W	0h	Active Low Input Override Control : Write 1 to select Active low Input Override value to control IOs IE_N/RXACTIVE_N instead of the control from hardware
3-0	func_sel	R/W	1h	Function select

6.2.9.90 PADDL_cfg_reg Register (Offset = 164h) [reset = C1h]

PADDL_cfg_reg is shown in and described in .

Return to the Summary Table.

Figure 6-1635. PADDL_cfg_reg Register

31	30	29	28	27	26	25	24
NU							
R/W-0h							
23	22	21	20	19	18	17	16
NU							
R/W-0h							
15	14	13	12	11	10	9	8
NU					sc1	pupdsel	pi
R/W-0h					R/W-0h	R/W-0h	R/W-0h
7	6	5	4	3	2	1	0
oe_override	oe_override_ctrl	ie_override	ie_override_ctrl	func_sel			
R/W-1h	R/W-1h	R/W-0h	R/W-0h	R/W-1h			

Table 6-1644. PADDL_cfg_reg Register Field Descriptions

Bit	Field	Type	Reset	Description
31-11	NU	R/W	0h	Reserved
10	sc1	R/W	0h	IO Slew rate control : 0 : higher slew rate. 1: Lower slew rate.
9	pupdsel	R/W	0h	Pullup/PullDown Selection 0 -- Pull Down
8	pi	R/W	0h	Pull Enable/Pull Disable 0 -- Enable
7	oe_override	R/W	1h	Active Low Output Override
6	oe_override_ctrl	R/W	1h	Active Low Output Override Control : Write 1 to select Active low Output Override value to control IOs OE_N/GZ instead of the control from hardware
5	ie_override	R/W	0h	Active Low Input Override
4	ie_override_ctrl	R/W	0h	Active Low Input Override Control : Write 1 to select Active low Input Override value to control IOs IE_N/RXACTIVE_N instead of the control from hardware
3-0	func_sel	R/W	1h	Function select

6.2.9.91 PADDM_cfg_reg Register (Offset = 168h) [reset = C1h]

PADDM_cfg_reg is shown in and described in .

Copyright © 2025 Texas Instruments Incorporated

Return to the Summary Table.

Figure 6-1636. PADDM_cfg_reg Register

31	30	29	28	27	26	25	24
NU							
R/W-0h							
23	22	21	20	19	18	17	16
NU							
R/W-0h							
15	14	13	12	11	10	9	8
NU					sc1	pupdsel	pi
R/W-0h					R/W-0h	R/W-0h	R/W-0h
7	6	5	4	3	2	1	0
oe_override	oe_override_ctrl	ie_override	ie_override_ctrl	func_sel			
R/W-1h	R/W-1h	R/W-0h	R/W-0h	R/W-1h			

Table 6-1645. PADDM_cfg_reg Register Field Descriptions

Bit	Field	Type	Reset	Description
31-11	NU	R/W	0h	Reserved
10	sc1	R/W	0h	IO Slew rate control : 0 : higher slew rate. 1: Lower slew rate.
9	pupdsel	R/W	0h	Pullup/PullDown Selection 0 -- Pull Down
8	pi	R/W	0h	Pull Enable/Pull Disable 0 -- Enable
7	oe_override	R/W	1h	Active Low Output Override
6	oe_override_ctrl	R/W	1h	Active Low Output Override Control : Write 1 to select Active low Output Override value to control IOs OE_N/GZ instead of the control from hardware
5	ie_override	R/W	0h	Active Low Input Override
4	ie_override_ctrl	R/W	0h	Active Low Input Override Control : Write 1 to select Active low Input Override value to control IOs IE_N/RXACTIVE_N instead of the control from hardware
3-0	func_sel	R/W	1h	Function select

6.2.9.92 PADDN_cfg_reg Register (Offset = 16Ch) [reset = C1h]

PADDN_cfg_reg is shown in and described in .

Return to the Summary Table.

Figure 6-1637. PADDN_cfg_reg Register

31	30	29	28	27	26	25	24
NU							
R/W-0h							
23	22	21	20	19	18	17	16
NU							
R/W-0h							
15	14	13	12	11	10	9	8
NU					sc1	pupdsel	pi
R/W-0h					R/W-0h	R/W-0h	R/W-0h

Copyright © 2025 Texas Instruments Incorporated

Figure 6-1637. PADDN_cfg_reg Register (continued)

7	6	5	4	3	2	1	0
oe_override	oe_override_ctrl	ie_override	ie_override_ctrl	func_sel			
R/W-1h	R/W-1h	R/W-0h	R/W-0h	R/W-1h			

Table 6-1646. PADDN_cfg_reg Register Field Descriptions

Bit	Field	Type	Reset	Description
31-11	NU	R/W	0h	Reserved
10	sc1	R/W	0h	IO Slew rate control : 0 : higher slew rate. 1: Lower slew rate.
9	pupdsel	R/W	0h	Pullup/PullDown Selection 0 -- Pull Down
8	pi	R/W	0h	Pull Enable/Pull Disable 0 -- Enable
7	oe_override	R/W	1h	Active Low Output Override
6	oe_override_ctrl	R/W	1h	Active Low Output Override Control : Write 1 to select Active low Output Override value to control IOs OE_N/GZ instead of the control from hardware
5	ie_override	R/W	0h	Active Low Input Override
4	ie_override_ctrl	R/W	0h	Active Low Input Override Control : Write 1 to select Active low Input Override value to control IOs IE_N/RXACTIVE_N instead of the control from hardware
3-0	func_sel	R/W	1h	Function select

6.2.9.93 PADDO_cfg_reg Register (Offset = 170h) [reset = C1h]

PADDO_cfg_reg is shown in and described in .

Return to the Summary Table.

Figure 6-1638. PADDO_cfg_reg Register

31	30	29	28	27	26	25	24
NU							
R/W-0h							
23	22	21	20	19	18	17	16
NU							
R/W-0h							
15	14	13	12	11	10	9	8
NU					sc1	pupdsel	pi
R/W-0h					R/W-0h	R/W-0h	R/W-0h
7	6	5	4	3	2	1	0
oe_override	oe_override_ctrl	ie_override	ie_override_ctrl	func_sel			
R/W-1h	R/W-1h	R/W-0h	R/W-0h	R/W-1h			

Table 6-1647. PADDO_cfg_reg Register Field Descriptions

Bit	Field	Type	Reset	Description
31-11	NU	R/W	0h	Reserved
10	sc1	R/W	0h	IO Slew rate control : 0 : higher slew rate. 1: Lower slew rate.
9	pupdsel	R/W	0h	Pullup/PullDown Selection 0 -- Pull Down
8	pi	R/W	0h	Pull Enable/Pull Disable 0 -- Enable
7	oe_override	R/W	1h	Active Low Output Override

Copyright © 2025 Texas Instruments Incorporated

Table 6-1647. PADDO_cfg_reg Register Field Descriptions (continued)

Bit	Field	Type	Reset	Description
6	oe_override_ctrl	R/W	1h	Active Low Output Override Control : Write 1 to select Active low Output Override value to control IOs OE_N/GZ instead of the control from hardware
5	ie_override	R/W	0h	Active Low Input Override
4	ie_override_ctrl	R/W	0h	Active Low Input Override Control : Write 1 to select Active low Input Override value to control IOs IE_N/RXACTIVE_N instead of the control from hardware
3-0	func_sel	R/W	1h	Function select

6.2.9.94 PADDP_cfg_reg Register (Offset = 174h) [reset = C1h]

PADDP_cfg_reg is shown in and described in .

Return to the Summary Table.

Figure 6-1639. PADDP_cfg_reg Register

31	30	29	28	27	26	25	24
NU							
R/W-0h							
23	22	21	20	19	18	17	16
NU							
R/W-0h							
15	14	13	12	11	10	9	8
NU					sc1	pupdsel	pi
R/W-0h					R/W-0h	R/W-0h	R/W-0h
7	6	5	4	3	2	1	0
oe_override	oe_override_ctrl	ie_override	ie_override_ctrl	func_sel			
R/W-1h	R/W-1h	R/W-0h	R/W-0h	R/W-1h			

Table 6-1648. PADDP_cfg_reg Register Field Descriptions

Bit	Field	Type	Reset	Description
31-11	NU	R/W	0h	Reserved
10	sc1	R/W	0h	IO Slew rate control : 0 : higher slew rate. 1: Lower slew rate.
9	pupdsel	R/W	0h	Pullup/PullDown Selection 0 -- Pull Down
8	pi	R/W	0h	Pull Enable/Pull Disable 0 -- Enable
7	oe_override	R/W	1h	Active Low Output Override
6	oe_override_ctrl	R/W	1h	Active Low Output Override Control : Write 1 to select Active low Output Override value to control IOs OE_N/GZ instead of the control from hardware
5	ie_override	R/W	0h	Active Low Input Override
4	ie_override_ctrl	R/W	0h	Active Low Input Override Control : Write 1 to select Active low Input Override value to control IOs IE_N/RXACTIVE_N instead of the control from hardware
3-0	func_sel	R/W	1h	Function select

6.2.9.95 PADDQ_cfg_reg Register (Offset = 178h) [reset = C1h]

PADDQ_cfg_reg is shown in and described in .

Copyright © 2025 Texas Instruments Incorporated

Return to the Summary Table.

Figure 6-1640. PADDQ_cfg_reg Register

31	30	29	28	27	26	25	24
NU							
R/W-0h							
23	22	21	20	19	18	17	16
NU							
R/W-0h							
15	14	13	12	11	10	9	8
NU					sc1	pupdsel	pi
R/W-0h					R/W-0h	R/W-0h	R/W-0h
7	6	5	4	3	2	1	0
oe_override	oe_override_ctrl	ie_override	ie_override_ctrl	func_sel			
R/W-1h	R/W-1h	R/W-0h	R/W-0h	R/W-1h			

Table 6-1649. PADDQ_cfg_reg Register Field Descriptions

Bit	Field	Type	Reset	Description
31-11	NU	R/W	0h	Reserved
10	sc1	R/W	0h	IO Slew rate control : 0 : higher slew rate. 1: Lower slew rate.
9	pupdsel	R/W	0h	Pullup/PullDown Selection 0 -- Pull Down
8	pi	R/W	0h	Pull Enable/Pull Disable 0 -- Enable
7	oe_override	R/W	1h	Active Low Output Override
6	oe_override_ctrl	R/W	1h	Active Low Output Override Control : Write 1 to select Active low Output Override value to control IOs OE_N/GZ instead of the control from hardware
5	ie_override	R/W	0h	Active Low Input Override
4	ie_override_ctrl	R/W	0h	Active Low Input Override Control : Write 1 to select Active low Input Override value to control IOs IE_N/RXACTIVE_N instead of the control from hardware
3-0	func_sel	R/W	1h	Function select

6.2.9.96 PADDR_cfg_reg Register (Offset = 17Ch) [reset = C1h]

PADDR_cfg_reg is shown in and described in .

Return to the Summary Table.

Figure 6-1641. PADDR_cfg_reg Register

31	30	29	28	27	26	25	24
NU							
R/W-0h							
23	22	21	20	19	18	17	16
NU							
R/W-0h							
15	14	13	12	11	10	9	8
NU					sc1	pupdsel	pi
R/W-0h					R/W-0h	R/W-0h	R/W-0h

Copyright © 2025 Texas Instruments Incorporated

Figure 6-1641. PADDR_cfg_reg Register (continued)

7	6	5	4	3	2	1	0
oe_override	oe_override_ctrl	ie_override	ie_override_ctrl	func_sel			
R/W-1h	R/W-1h	R/W-0h	R/W-0h	R/W-1h			

Table 6-1650. PADDR_cfg_reg Register Field Descriptions

Bit	Field	Type	Reset	Description
31-11	NU	R/W	0h	Reserved
10	sc1	R/W	0h	IO Slew rate control : 0 : higher slew rate. 1: Lower slew rate.
9	pupdsel	R/W	0h	Pullup/PullDown Selection 0 -- Pull Down
8	pi	R/W	0h	Pull Enable/Pull Disable 0 -- Enable
7	oe_override	R/W	1h	Active Low Output Override
6	oe_override_ctrl	R/W	1h	Active Low Output Override Control : Write 1 to select Active low Output Override value to control IOs OE_N/GZ instead of the control from hardware
5	ie_override	R/W	0h	Active Low Input Override
4	ie_override_ctrl	R/W	0h	Active Low Input Override Control : Write 1 to select Active low Input Override value to control IOs IE_N/RXACTIVE_N instead of the control from hardware
3-0	func_sel	R/W	1h	Function select

6.2.9.97 PADDS_cfg_reg Register (Offset = 180h) [reset = 2C1h]

PADDS_cfg_reg is shown in and described in .

Return to the Summary Table.

Figure 6-1642. PADDS_cfg_reg Register

31	30	29	28	27	26	25	24
NU							
R/W-0h							
23	22	21	20	19	18	17	16
NU							
R/W-0h							
15	14	13	12	11	10	9	8
NU					sc1	pupdsel	pi
R/W-0h					R/W-0h	R/W-1h	R/W-0h
7	6	5	4	3	2	1	0
oe_override	oe_override_ctrl	ie_override	ie_override_ctrl	func_sel			
R/W-1h	R/W-1h	R/W-0h	R/W-0h	R/W-1h			

Table 6-1651. PADDS_cfg_reg Register Field Descriptions

Bit	Field	Type	Reset	Description
31-11	NU	R/W	0h	Reserved
10	sc1	R/W	0h	IO Slew rate control : 0 : higher slew rate. 1: Lower slew rate.
9	pupdsel	R/W	1h	Pullup/PullDown Selection 0 -- Pull Down
8	pi	R/W	0h	Pull Enable/Pull Disable 0 -- Enable
7	oe_override	R/W	1h	Active Low Output Override

Copyright © 2025 Texas Instruments Incorporated

Table 6-1651. PADDS_cfg_reg Register Field Descriptions (continued)

Bit	Field	Type	Reset	Description
6	oe_override_ctrl	R/W	1h	Active Low Output Override Control : Write 1 to select Active low Output Override value to control IOs OE_N/GZ instead of the control from hardware
5	ie_override	R/W	0h	Active Low Input Override
4	ie_override_ctrl	R/W	0h	Active Low Input Override Control : Write 1 to select Active low Input Override value to control IOs IE_N/RXACTIVE_N instead of the control from hardware
3-0	func_sel	R/W	1h	Function select

6.2.9.98 PADDT_cfg_reg Register (Offset = 184h) [reset = 2C1h]

PADDT_cfg_reg is shown in and described in .

Return to the Summary Table.

Figure 6-1643. PADDT_cfg_reg Register

31	30	29	28	27	26	25	24
NU							
R/W-0h							
23	22	21	20	19	18	17	16
NU							
R/W-0h							
15	14	13	12	11	10	9	8
NU					sc1	pupdsel	pi
R/W-0h					R/W-0h	R/W-1h	R/W-0h
7	6	5	4	3	2	1	0
oe_override	oe_override_ctrl	ie_override	ie_override_ctrl	func_sel			
R/W-1h	R/W-1h	R/W-0h	R/W-0h	R/W-1h			

Table 6-1652. PADDT_cfg_reg Register Field Descriptions

Bit	Field	Type	Reset	Description
31-11	NU	R/W	0h	Reserved
10	sc1	R/W	0h	IO Slew rate control : 0 : higher slew rate. 1: Lower slew rate.
9	pupdsel	R/W	1h	Pullup/PullDown Selection 0 -- Pull Down
8	pi	R/W	0h	Pull Enable/Pull Disable 0 -- Enable
7	oe_override	R/W	1h	Active Low Output Override
6	oe_override_ctrl	R/W	1h	Active Low Output Override Control : Write 1 to select Active low Output Override value to control IOs OE_N/GZ instead of the control from hardware
5	ie_override	R/W	0h	Active Low Input Override
4	ie_override_ctrl	R/W	0h	Active Low Input Override Control : Write 1 to select Active low Input Override value to control IOs IE_N/RXACTIVE_N instead of the control from hardware
3-0	func_sel	R/W	1h	Function select

6.2.9.99 PADDU_cfg_reg Register (Offset = 188h) [reset = C1h]

PADDU_cfg_reg is shown in and described in .

Copyright © 2025 Texas Instruments Incorporated

Return to the Summary Table.

Figure 6-1644. PADDU_cfg_reg Register

31	30	29	28	27	26	25	24
NU							
R/W-0h							
23	22	21	20	19	18	17	16
NU							
R/W-0h							
15	14	13	12	11	10	9	8
NU					sc1	pupdsel	pi
R/W-0h					R/W-0h	R/W-0h	R/W-0h
7	6	5	4	3	2	1	0
oe_override	oe_override_ctrl	ie_override	ie_override_ctrl	func_sel			
R/W-1h	R/W-1h	R/W-0h	R/W-0h	R/W-1h			

Table 6-1653. PADDU_cfg_reg Register Field Descriptions

Bit	Field	Type	Reset	Description
31-11	NU	R/W	0h	Reserved
10	sc1	R/W	0h	IO Slew rate control : 0 : higher slew rate. 1: Lower slew rate.
9	pupdsel	R/W	0h	Pullup/PullDown Selection 0 -- Pull Down
8	pi	R/W	0h	Pull Enable/Pull Disable 0 -- Enable
7	oe_override	R/W	1h	Active Low Output Override
6	oe_override_ctrl	R/W	1h	Active Low Output Override Control : Write 1 to select Active low Output Override value to control IOs OE_N/GZ instead of the control from hardware
5	ie_override	R/W	0h	Active Low Input Override
4	ie_override_ctrl	R/W	0h	Active Low Input Override Control : Write 1 to select Active low Input Override value to control IOs IE_N/RXACTIVE_N instead of the control from hardware
3-0	func_sel	R/W	1h	Function select

6.2.9.100 PADDV_cfg_reg Register (Offset = 18Ch) [reset = C1h]

PADDV_cfg_reg is shown in and described in .

Return to the Summary Table.

Figure 6-1645. PADDV_cfg_reg Register

31	30	29	28	27	26	25	24
NU							
R/W-0h							
23	22	21	20	19	18	17	16
NU							
R/W-0h							
15	14	13	12	11	10	9	8
NU					sc1	pupdsel	pi
R/W-0h					R/W-0h	R/W-0h	R/W-0h

Copyright © 2025 Texas Instruments Incorporated

Figure 6-1645. PADDV_cfg_reg Register (continued)

7	6	5	4	3	2	1	0
oe_override	oe_override_ctrl	ie_override	ie_override_ctrl	func_sel			
R/W-1h	R/W-1h	R/W-0h	R/W-0h	R/W-1h			

Table 6-1654. PADDV_cfg_reg Register Field Descriptions

Bit	Field	Type	Reset	Description
31-11	NU	R/W	0h	Reserved
10	sc1	R/W	0h	IO Slew rate control : 0 : higher slew rate. 1: Lower slew rate.
9	pupdsel	R/W	0h	Pullup/PullDown Selection 0 -- Pull Down
8	pi	R/W	0h	Pull Enable/Pull Disable 0 -- Enable
7	oe_override	R/W	1h	Active Low Output Override
6	oe_override_ctrl	R/W	1h	Active Low Output Override Control : Write 1 to select Active low Output Override value to control IOs OE_N/GZ instead of the control from hardware
5	ie_override	R/W	0h	Active Low Input Override
4	ie_override_ctrl	R/W	0h	Active Low Input Override Control : Write 1 to select Active low Input Override value to control IOs IE_N/RXACTIVE_N instead of the control from hardware
3-0	func_sel	R/W	1h	Function select

6.2.9.101 PADDW_cfg_reg Register (Offset = 190h) [reset = C1h]

PADDW_cfg_reg is shown in and described in .

Return to the Summary Table.

Figure 6-1646. PADDW_cfg_reg Register

31	30	29	28	27	26	25	24
NU							
R/W-0h							
23	22	21	20	19	18	17	16
NU							
R/W-0h							
15	14	13	12	11	10	9	8
NU					sc1	pupdsel	pi
R/W-0h					R/W-0h	R/W-0h	R/W-0h
7	6	5	4	3	2	1	0
oe_override	oe_override_ctrl	ie_override	ie_override_ctrl	func_sel			
R/W-1h	R/W-1h	R/W-0h	R/W-0h	R/W-1h			

Table 6-1655. PADDW_cfg_reg Register Field Descriptions

Bit	Field	Type	Reset	Description
31-11	NU	R/W	0h	Reserved
10	sc1	R/W	0h	IO Slew rate control : 0 : higher slew rate. 1: Lower slew rate.
9	pupdsel	R/W	0h	Pullup/PullDown Selection 0 -- Pull Down
8	pi	R/W	0h	Pull Enable/Pull Disable 0 -- Enable
7	oe_override	R/W	1h	Active Low Output Override

Copyright © 2025 Texas Instruments Incorporated

Table 6-1655. PADDW_cfg_reg Register Field Descriptions (continued)

Bit	Field	Type	Reset	Description
6	oe_override_ctrl	R/W	1h	Active Low Output Override Control : Write 1 to select Active low Output Override value to control IOs OE_N/GZ instead of the control from hardware
5	ie_override	R/W	0h	Active Low Input Override
4	ie_override_ctrl	R/W	0h	Active Low Input Override Control : Write 1 to select Active low Input Override value to control IOs IE_N/RXACTIVE_N instead of the control from hardware
3-0	func_sel	R/W	1h	Function select

6.2.9.102 PADDX_cfg_reg Register (Offset = 194h) [reset = C1h]

PADDX_cfg_reg is shown in and described in .

Return to the Summary Table.

Figure 6-1647. PADDX_cfg_reg Register

31	30	29	28	27	26	25	24
NU							
R/W-0h							
23	22	21	20	19	18	17	16
NU							
R/W-0h							
15	14	13	12	11	10	9	8
NU					sc1	pupdsel	pi
R/W-0h					R/W-0h	R/W-0h	R/W-0h
7	6	5	4	3	2	1	0
oe_override	oe_override_ctrl	ie_override	ie_override_ctrl	func_sel			
R/W-1h	R/W-1h	R/W-0h	R/W-0h	R/W-1h			

Table 6-1656. PADDX_cfg_reg Register Field Descriptions

Bit	Field	Type	Reset	Description
31-11	NU	R/W	0h	Reserved
10	sc1	R/W	0h	IO Slew rate control : 0 : higher slew rate. 1: Lower slew rate.
9	pupdsel	R/W	0h	Pullup/PullDown Selection 0 -- Pull Down
8	pi	R/W	0h	Pull Enable/Pull Disable 0 -- Enable
7	oe_override	R/W	1h	Active Low Output Override
6	oe_override_ctrl	R/W	1h	Active Low Output Override Control : Write 1 to select Active low Output Override value to control IOs OE_N/GZ instead of the control from hardware
5	ie_override	R/W	0h	Active Low Input Override
4	ie_override_ctrl	R/W	0h	Active Low Input Override Control : Write 1 to select Active low Input Override value to control IOs IE_N/RXACTIVE_N instead of the control from hardware
3-0	func_sel	R/W	1h	Function select

6.2.9.103 PADDY_cfg_reg Register (Offset = 198h) [reset = C1h]

PADDY_cfg_reg is shown in and described in .

Copyright © 2025 Texas Instruments Incorporated

Return to the Summary Table.

Figure 6-1648. PADDY_cfg_reg Register

31	30	29	28	27	26	25	24
NU							
R/W-0h							
23	22	21	20	19	18	17	16
NU							
R/W-0h							
15	14	13	12	11	10	9	8
NU					sc1	pupdsel	pi
R/W-0h					R/W-0h	R/W-0h	R/W-0h
7	6	5	4	3	2	1	0
oe_override	oe_override_ctrl	ie_override	ie_override_ctrl	func_sel			
R/W-1h	R/W-1h	R/W-0h	R/W-0h	R/W-1h			

Table 6-1657. PADDY_cfg_reg Register Field Descriptions

Bit	Field	Type	Reset	Description
31-11	NU	R/W	0h	Reserved
10	sc1	R/W	0h	IO Slew rate control : 0 : higher slew rate. 1: Lower slew rate.
9	pupdsel	R/W	0h	Pullup/PullDown Selection 0 -- Pull Down
8	pi	R/W	0h	Pull Enable/Pull Disable 0 -- Enable
7	oe_override	R/W	1h	Active Low Output Override
6	oe_override_ctrl	R/W	1h	Active Low Output Override Control : Write 1 to select Active low Output Override value to control IOs OE_N/GZ instead of the control from hardware
5	ie_override	R/W	0h	Active Low Input Override
4	ie_override_ctrl	R/W	0h	Active Low Input Override Control : Write 1 to select Active low Input Override value to control IOs IE_N/RXACTIVE_N instead of the control from hardware
3-0	func_sel	R/W	1h	Function select

6.2.9.104 PADDZ_cfg_reg Register (Offset = 19Ch) [reset = C1h]

PADDZ_cfg_reg is shown in and described in .

Return to the Summary Table.

Figure 6-1649. PADDZ_cfg_reg Register

31	30	29	28	27	26	25	24
NU							
R/W-0h							
23	22	21	20	19	18	17	16
NU							
R/W-0h							
15	14	13	12	11	10	9	8
NU					sc1	pupdsel	pi
R/W-0h					R/W-0h	R/W-0h	R/W-0h

Copyright © 2025 Texas Instruments Incorporated

Figure 6-1649. PADDZ_cfg_reg Register (continued)

7	6	5	4	3	2	1	0
oe_override	oe_override_ctrl	ie_override	ie_override_ctrl	func_sel			
R/W-1h	R/W-1h	R/W-0h	R/W-0h	R/W-1h			

Table 6-1658. PADDZ_cfg_reg Register Field Descriptions

Bit	Field	Type	Reset	Description
31-11	NU	R/W	0h	Reserved
10	sc1	R/W	0h	IO Slew rate control : 0 : higher slew rate. 1: Lower slew rate.
9	pupdsel	R/W	0h	Pullup/PullDown Selection 0 -- Pull Down
8	pi	R/W	0h	Pull Enable/Pull Disable 0 -- Enable
7	oe_override	R/W	1h	Active Low Output Override
6	oe_override_ctrl	R/W	1h	Active Low Output Override Control : Write 1 to select Active low Output Override value to control IOs OE_N/GZ instead of the control from hardware
5	ie_override	R/W	0h	Active Low Input Override
4	ie_override_ctrl	R/W	0h	Active Low Input Override Control : Write 1 to select Active low Input Override value to control IOs IE_N/RXACTIVE_N instead of the control from hardware
3-0	func_sel	R/W	1h	Function select

6.2.9.105 PADEA_cfg_reg Register (Offset = 1A0h) [reset = C1h]

PADEA_cfg_reg is shown in and described in .

Return to the Summary Table.

Figure 6-1650. PADEA_cfg_reg Register

31	30	29	28	27	26	25	24
NU							
R/W-0h							
23	22	21	20	19	18	17	16
NU							
R/W-0h							
15	14	13	12	11	10	9	8
NU					sc1	pupdsel	pi
R/W-0h					R/W-0h	R/W-0h	R/W-0h
7	6	5	4	3	2	1	0
oe_override	oe_override_ctrl	ie_override	ie_override_ctrl	func_sel			
R/W-1h	R/W-1h	R/W-0h	R/W-0h	R/W-1h			

Table 6-1659. PADEA_cfg_reg Register Field Descriptions

Bit	Field	Type	Reset	Description
31-11	NU	R/W	0h	Reserved
10	sc1	R/W	0h	IO Slew rate control : 0 : higher slew rate. 1: Lower slew rate.
9	pupdsel	R/W	0h	Pullup/PullDown Selection 0 -- Pull Down
8	pi	R/W	0h	Pull Enable/Pull Disable 0 -- Enable
7	oe_override	R/W	1h	Active Low Output Override

Copyright © 2025 Texas Instruments Incorporated

Table 6-1659. PADEA_cfg_reg Register Field Descriptions (continued)

Bit	Field	Type	Reset	Description
6	oe_override_ctrl	R/W	1h	Active Low Output Override Control : Write 1 to select Active low Output Override value to control IOs OE_N/GZ instead of the control from hardware
5	ie_override	R/W	0h	Active Low Input Override
4	ie_override_ctrl	R/W	0h	Active Low Input Override Control : Write 1 to select Active low Input Override value to control IOs IE_N/RXACTIVE_N instead of the control from hardware
3-0	func_sel	R/W	1h	Function select

6.2.9.106 PADEB_cfg_reg Register (Offset = 1A4h) [reset = C1h]

PADEB_cfg_reg is shown in and described in .

Return to the Summary Table.

Figure 6-1651. PADEB_cfg_reg Register

31	30	29	28	27	26	25	24
NU							
R/W-0h							
23	22	21	20	19	18	17	16
NU							
R/W-0h							
15	14	13	12	11	10	9	8
NU					sc1	pupdsel	pi
R/W-0h					R/W-0h	R/W-0h	R/W-0h
7	6	5	4	3	2	1	0
oe_override	oe_override_ctrl	ie_override	ie_override_ctrl	func_sel			
R/W-1h	R/W-1h	R/W-0h	R/W-0h	R/W-1h			

Table 6-1660. PADEB_cfg_reg Register Field Descriptions

Bit	Field	Type	Reset	Description
31-11	NU	R/W	0h	Reserved
10	sc1	R/W	0h	IO Slew rate control : 0 : higher slew rate. 1: Lower slew rate.
9	pupdsel	R/W	0h	Pullup/PullDown Selection 0 -- Pull Down
8	pi	R/W	0h	Pull Enable/Pull Disable 0 -- Enable
7	oe_override	R/W	1h	Active Low Output Override
6	oe_override_ctrl	R/W	1h	Active Low Output Override Control : Write 1 to select Active low Output Override value to control IOs OE_N/GZ instead of the control from hardware
5	ie_override	R/W	0h	Active Low Input Override
4	ie_override_ctrl	R/W	0h	Active Low Input Override Control : Write 1 to select Active low Input Override value to control IOs IE_N/RXACTIVE_N instead of the control from hardware
3-0	func_sel	R/W	1h	Function select

6.2.9.107 PADEC_cfg_reg Register (Offset = 1A8h) [reset = C1h]

PADEC_cfg_reg is shown in and described in .

Copyright © 2025 Texas Instruments Incorporated

Return to the Summary Table.

Figure 6-1652. PADEC_cfg_reg Register

31	30	29	28	27	26	25	24
NU							
R/W-0h							
23	22	21	20	19	18	17	16
NU							
R/W-0h							
15	14	13	12	11	10	9	8
NU					sc1	pupdsel	pi
R/W-0h					R/W-0h	R/W-0h	R/W-0h
7	6	5	4	3	2	1	0
oe_override	oe_override_ctrl	ie_override	ie_override_ctrl	func_sel			
R/W-1h	R/W-1h	R/W-0h	R/W-0h	R/W-1h			

Table 6-1661. PADEC_cfg_reg Register Field Descriptions

Bit	Field	Type	Reset	Description
31-11	NU	R/W	0h	Reserved
10	sc1	R/W	0h	IO Slew rate control : 0 : higher slew rate. 1: Lower slew rate.
9	pupdsel	R/W	0h	Pullup/PullDown Selection 0 -- Pull Down
8	pi	R/W	0h	Pull Enable/Pull Disable 0 -- Enable
7	oe_override	R/W	1h	Active Low Output Override
6	oe_override_ctrl	R/W	1h	Active Low Output Override Control : Write 1 to select Active low Output Override value to control IOs OE_N/GZ instead of the control from hardware
5	ie_override	R/W	0h	Active Low Input Override
4	ie_override_ctrl	R/W	0h	Active Low Input Override Control : Write 1 to select Active low Input Override value to control IOs IE_N/RXACTIVE_N instead of the control from hardware
3-0	func_sel	R/W	1h	Function select

6.2.9.108 PADED_cfg_reg Register (Offset = 1ACh) [reset = C1h]

PADED_cfg_reg is shown in and described in .

Return to the Summary Table.

Figure 6-1653. PADED_cfg_reg Register

31	30	29	28	27	26	25	24
NU							
R/W-0h							
23	22	21	20	19	18	17	16
NU							
R/W-0h							
15	14	13	12	11	10	9	8
NU					sc1	pupdsel	pi
R/W-0h					R/W-0h	R/W-0h	R/W-0h

Copyright © 2025 Texas Instruments Incorporated

Figure 6-1653. PADED_cfg_reg Register (continued)

7	6	5	4	3	2	1	0
oe_override	oe_override_ctrl	ie_override	ie_override_ctrl	func_sel			
R/W-1h	R/W-1h	R/W-0h	R/W-0h	R/W-1h			

Table 6-1662. PADED_cfg_reg Register Field Descriptions

Bit	Field	Type	Reset	Description
31-11	NU	R/W	0h	Reserved
10	sc1	R/W	0h	IO Slew rate control : 0 : higher slew rate. 1: Lower slew rate.
9	pupdsel	R/W	0h	Pullup/PullDown Selection 0 -- Pull Down
8	pi	R/W	0h	Pull Enable/Pull Disable 0 -- Enable
7	oe_override	R/W	1h	Active Low Output Override
6	oe_override_ctrl	R/W	1h	Active Low Output Override Control : Write 1 to select Active low Output Override value to control IOs OE_N/GZ instead of the control from hardware
5	ie_override	R/W	0h	Active Low Input Override
4	ie_override_ctrl	R/W	0h	Active Low Input Override Control : Write 1 to select Active low Input Override value to control IOs IE_N/RXACTIVE_N instead of the control from hardware
3-0	func_sel	R/W	1h	Function select

6.2.9.109 PADEE_cfg_reg Register (Offset = 1B0h) [reset = C1h]

PADEE_cfg_reg is shown in and described in .

Return to the Summary Table.

Figure 6-1654. PADEE_cfg_reg Register

31	30	29	28	27	26	25	24
NU							
R/W-0h							
23	22	21	20	19	18	17	16
NU							
R/W-0h							
15	14	13	12	11	10	9	8
NU					sc1	pupdsel	pi
R/W-0h					R/W-0h	R/W-0h	R/W-0h
7	6	5	4	3	2	1	0
oe_override	oe_override_ctrl	ie_override	ie_override_ctrl	func_sel			
R/W-1h	R/W-1h	R/W-0h	R/W-0h	R/W-1h			

Table 6-1663. PADEE_cfg_reg Register Field Descriptions

Bit	Field	Type	Reset	Description
31-11	NU	R/W	0h	Reserved
10	sc1	R/W	0h	IO Slew rate control : 0 : higher slew rate. 1: Lower slew rate.
9	pupdsel	R/W	0h	Pullup/PullDown Selection 0 -- Pull Down
8	pi	R/W	0h	Pull Enable/Pull Disable 0 -- Enable
7	oe_override	R/W	1h	Active Low Output Override

Copyright © 2025 Texas Instruments Incorporated

Table 6-1663. PADEE_cfg_reg Register Field Descriptions (continued)

Bit	Field	Type	Reset	Description
6	oe_override_ctrl	R/W	1h	Active Low Output Override Control : Write 1 to select Active low Output Override value to control IOs OE_N/GZ instead of the control from hardware
5	ie_override	R/W	0h	Active Low Input Override
4	ie_override_ctrl	R/W	0h	Active Low Input Override Control : Write 1 to select Active low Input Override value to control IOs IE_N/RXACTIVE_N instead of the control from hardware
3-0	func_sel	R/W	1h	Function select

6.2.9.110 PADEF_cfg_reg Register (Offset = 1B4h) [reset = C1h]

PADEF_cfg_reg is shown in and described in .

Return to the Summary Table.

Figure 6-1655. PADEF_cfg_reg Register

31	30	29	28	27	26	25	24
NU							
R/W-0h							
23	22	21	20	19	18	17	16
NU							
R/W-0h							
15	14	13	12	11	10	9	8
NU					sc1	pupdsel	pi
R/W-0h					R/W-0h	R/W-0h	R/W-0h
7	6	5	4	3	2	1	0
oe_override	oe_override_ctrl	ie_override	ie_override_ctrl	func_sel			
R/W-1h	R/W-1h	R/W-0h	R/W-0h	R/W-1h			

Table 6-1664. PADEF_cfg_reg Register Field Descriptions

Bit	Field	Type	Reset	Description
31-11	NU	R/W	0h	Reserved
10	sc1	R/W	0h	IO Slew rate control : 0 : higher slew rate. 1: Lower slew rate.
9	pupdsel	R/W	0h	Pullup/PullDown Selection 0 -- Pull Down
8	pi	R/W	0h	Pull Enable/Pull Disable 0 -- Enable
7	oe_override	R/W	1h	Active Low Output Override
6	oe_override_ctrl	R/W	1h	Active Low Output Override Control : Write 1 to select Active low Output Override value to control IOs OE_N/GZ instead of the control from hardware
5	ie_override	R/W	0h	Active Low Input Override
4	ie_override_ctrl	R/W	0h	Active Low Input Override Control : Write 1 to select Active low Input Override value to control IOs IE_N/RXACTIVE_N instead of the control from hardware
3-0	func_sel	R/W	1h	Function select

6.2.9.111 PADEG_cfg_reg Register (Offset = 1B8h) [reset = C1h]

PADEG_cfg_reg is shown in and described in .

Copyright © 2025 Texas Instruments Incorporated

Return to the Summary Table.

Figure 6-1656. PADEG_cfg_reg Register

31	30	29	28	27	26	25	24
NU							
R/W-0h							
23	22	21	20	19	18	17	16
NU							
R/W-0h							
15	14	13	12	11	10	9	8
NU					sc1	pupdsel	pi
R/W-0h					R/W-0h	R/W-0h	R/W-0h
7	6	5	4	3	2	1	0
oe_override	oe_override_ctrl	ie_override	ie_override_ctrl	func_sel			
R/W-1h	R/W-1h	R/W-0h	R/W-0h	R/W-1h			

Table 6-1665. PADEG_cfg_reg Register Field Descriptions

Bit	Field	Type	Reset	Description
31-11	NU	R/W	0h	Reserved
10	sc1	R/W	0h	IO Slew rate control : 0 : higher slew rate. 1: Lower slew rate.
9	pupdsel	R/W	0h	Pullup/PullDown Selection 0 -- Pull Down
8	pi	R/W	0h	Pull Enable/Pull Disable 0 -- Enable
7	oe_override	R/W	1h	Active Low Output Override
6	oe_override_ctrl	R/W	1h	Active Low Output Override Control : Write 1 to select Active low Output Override value to control IOs OE_N/GZ instead of the control from hardware
5	ie_override	R/W	0h	Active Low Input Override
4	ie_override_ctrl	R/W	0h	Active Low Input Override Control : Write 1 to select Active low Input Override value to control IOs IE_N/RXACTIVE_N instead of the control from hardware
3-0	func_sel	R/W	1h	Function select

6.2.9.112 PADEH_cfg_reg Register (Offset = 1BCh) [reset = C1h]

PADEH_cfg_reg is shown in and described in .

Return to the Summary Table.

Figure 6-1657. PADEH_cfg_reg Register

31	30	29	28	27	26	25	24
NU							
R/W-0h							
23	22	21	20	19	18	17	16
NU							
R/W-0h							
15	14	13	12	11	10	9	8
NU					sc1	pupdsel	pi
R/W-0h					R/W-0h	R/W-0h	R/W-0h

Copyright © 2025 Texas Instruments Incorporated

Figure 6-1657. PADEH_cfg_reg Register (continued)

7	6	5	4	3	2	1	0
oe_override	oe_override_ctrl	ie_override	ie_override_ctrl	func_sel			
R/W-1h	R/W-1h	R/W-0h	R/W-0h	R/W-1h			

Table 6-1666. PADEH_cfg_reg Register Field Descriptions

Bit	Field	Type	Reset	Description
31-11	NU	R/W	0h	Reserved
10	sc1	R/W	0h	IO Slew rate control : 0 : higher slew rate. 1: Lower slew rate.
9	pupdsel	R/W	0h	Pullup/PullDown Selection 0 -- Pull Down
8	pi	R/W	0h	Pull Enable/Pull Disable 0 -- Enable
7	oe_override	R/W	1h	Active Low Output Override
6	oe_override_ctrl	R/W	1h	Active Low Output Override Control : Write 1 to select Active low Output Override value to control IOs OE_N/GZ instead of the control from hardware
5	ie_override	R/W	0h	Active Low Input Override
4	ie_override_ctrl	R/W	0h	Active Low Input Override Control : Write 1 to select Active low Input Override value to control IOs IE_N/RXACTIVE_N instead of the control from hardware
3-0	func_sel	R/W	1h	Function select

6.2.9.113 PADEI_cfg_reg Register (Offset = 1C0h) [reset = C1h]

PADEI_cfg_reg is shown in and described in .

Return to the Summary Table.

Figure 6-1658. PADEI_cfg_reg Register

31	30	29	28	27	26	25	24
NU							
R/W-0h							
23	22	21	20	19	18	17	16
NU							
R/W-0h							
15	14	13	12	11	10	9	8
NU					sc1	pupdsel	pi
R/W-0h					R/W-0h	R/W-0h	R/W-0h
7	6	5	4	3	2	1	0
oe_override	oe_override_ctrl	ie_override	ie_override_ctrl	func_sel			
R/W-1h	R/W-1h	R/W-0h	R/W-0h	R/W-1h			

Table 6-1667. PADEI_cfg_reg Register Field Descriptions

Bit	Field	Type	Reset	Description
31-11	NU	R/W	0h	Reserved
10	sc1	R/W	0h	IO Slew rate control : 0 : higher slew rate. 1: Lower slew rate.
9	pupdsel	R/W	0h	Pullup/PullDown Selection 0 -- Pull Down
8	pi	R/W	0h	Pull Enable/Pull Disable 0 -- Enable
7	oe_override	R/W	1h	Active Low Output Override

Copyright © 2025 Texas Instruments Incorporated

Table 6-1667. PADEI_cfg_reg Register Field Descriptions (continued)

Bit	Field	Type	Reset	Description
6	oe_override_ctrl	R/W	1h	Active Low Output Override Control : Write 1 to select Active low Output Override value to control IOs OE_N/GZ instead of the control from hardware
5	ie_override	R/W	0h	Active Low Input Override
4	ie_override_ctrl	R/W	0h	Active Low Input Override Control : Write 1 to select Active low Input Override value to control IOs IE_N/RXACTIVE_N instead of the control from hardware
3-0	func_sel	R/W	1h	Function select

6.2.9.114 PADEJ_cfg_reg Register (Offset = 1C4h) [reset = C1h]

PADEJ_cfg_reg is shown in and described in .

Return to the Summary Table.

Figure 6-1659. PADEJ_cfg_reg Register

31	30	29	28	27	26	25	24
NU							
R/W-0h							
23	22	21	20	19	18	17	16
NU							
R/W-0h							
15	14	13	12	11	10	9	8
NU					sc1	pupdsel	pi
R/W-0h					R/W-0h	R/W-0h	R/W-0h
7	6	5	4	3	2	1	0
oe_override	oe_override_ctrl	ie_override	ie_override_ctrl	func_sel			
R/W-1h	R/W-1h	R/W-0h	R/W-0h	R/W-1h			

Table 6-1668. PADEJ_cfg_reg Register Field Descriptions

Bit	Field	Type	Reset	Description
31-11	NU	R/W	0h	Reserved
10	sc1	R/W	0h	IO Slew rate control : 0 : higher slew rate. 1: Lower slew rate.
9	pupdsel	R/W	0h	Pullup/PullDown Selection 0 -- Pull Down
8	pi	R/W	0h	Pull Enable/Pull Disable 0 -- Enable
7	oe_override	R/W	1h	Active Low Output Override
6	oe_override_ctrl	R/W	1h	Active Low Output Override Control : Write 1 to select Active low Output Override value to control IOs OE_N/GZ instead of the control from hardware
5	ie_override	R/W	0h	Active Low Input Override
4	ie_override_ctrl	R/W	0h	Active Low Input Override Control : Write 1 to select Active low Input Override value to control IOs IE_N/RXACTIVE_N instead of the control from hardware
3-0	func_sel	R/W	1h	Function select

6.2.9.115 PADEK_cfg_reg Register (Offset = 1C8h) [reset = C1h]

PADEK_cfg_reg is shown in and described in .

Copyright © 2025 Texas Instruments Incorporated

Return to the Summary Table.

Figure 6-1660. PADEK_cfg_reg Register

31	30	29	28	27	26	25	24
NU							
R/W-0h							
23	22	21	20	19	18	17	16
NU							
R/W-0h							
15	14	13	12	11	10	9	8
NU					sc1	pupdsel	pi
R/W-0h					R/W-0h	R/W-0h	R/W-0h
7	6	5	4	3	2	1	0
oe_override	oe_override_ctrl	ie_override	ie_override_ctrl	func_sel			
R/W-1h	R/W-1h	R/W-0h	R/W-0h	R/W-1h			

Table 6-1669. PADEK_cfg_reg Register Field Descriptions

Bit	Field	Type	Reset	Description
31-11	NU	R/W	0h	Reserved
10	sc1	R/W	0h	IO Slew rate control : 0 : higher slew rate. 1: Lower slew rate.
9	pupdsel	R/W	0h	Pullup/PullDown Selection 0 -- Pull Down
8	pi	R/W	0h	Pull Enable/Pull Disable 0 -- Enable
7	oe_override	R/W	1h	Active Low Output Override
6	oe_override_ctrl	R/W	1h	Active Low Output Override Control : Write 1 to select Active low Output Override value to control IOs OE_N/GZ instead of the control from hardware
5	ie_override	R/W	0h	Active Low Input Override
4	ie_override_ctrl	R/W	0h	Active Low Input Override Control : Write 1 to select Active low Input Override value to control IOs IE_N/RXACTIVE_N instead of the control from hardware
3-0	func_sel	R/W	1h	Function select

6.2.9.116 PADEL_cfg_reg Register (Offset = 1CCh) [reset = C1h]

PADEL_cfg_reg is shown in and described in .

Return to the Summary Table.

Figure 6-1661. PADEL_cfg_reg Register

31	30	29	28	27	26	25	24
NU							
R/W-0h							
23	22	21	20	19	18	17	16
NU							
R/W-0h							
15	14	13	12	11	10	9	8
NU					sc1	pupdsel	pi
R/W-0h					R/W-0h	R/W-0h	R/W-0h

Copyright © 2025 Texas Instruments Incorporated

Figure 6-1661. PADEL_cfg_reg Register (continued)

7	6	5	4	3	2	1	0
oe_override	oe_override_ctrl	ie_override	ie_override_ctrl	func_sel			
R/W-1h	R/W-1h	R/W-0h	R/W-0h	R/W-1h			

Table 6-1670. PADEL_cfg_reg Register Field Descriptions

Bit	Field	Type	Reset	Description
31-11	NU	R/W	0h	Reserved
10	sc1	R/W	0h	IO Slew rate control : 0 : higher slew rate. 1: Lower slew rate.
9	pupdsel	R/W	0h	Pullup/PullDown Selection 0 -- Pull Down
8	pi	R/W	0h	Pull Enable/Pull Disable 0 -- Enable
7	oe_override	R/W	1h	Active Low Output Override
6	oe_override_ctrl	R/W	1h	Active Low Output Override Control : Write 1 to select Active low Output Override value to control IOs OE_N/GZ instead of the control from hardware
5	ie_override	R/W	0h	Active Low Input Override
4	ie_override_ctrl	R/W	0h	Active Low Input Override Control : Write 1 to select Active low Input Override value to control IOs IE_N/RXACTIVE_N instead of the control from hardware
3-0	func_sel	R/W	1h	Function select

6.2.9.117 PADEM_cfg_reg Register (Offset = 1D0h) [reset = C1h]

PADEM_cfg_reg is shown in and described in .

Return to the Summary Table.

Figure 6-1662. PADEM_cfg_reg Register

31	30	29	28	27	26	25	24
NU							
R/W-0h							
23	22	21	20	19	18	17	16
NU							
R/W-0h							
15	14	13	12	11	10	9	8
NU					sc1	pupdsel	pi
R/W-0h					R/W-0h	R/W-0h	R/W-0h
7	6	5	4	3	2	1	0
oe_override	oe_override_ctrl	ie_override	ie_override_ctrl	func_sel			
R/W-1h	R/W-1h	R/W-0h	R/W-0h	R/W-1h			

Table 6-1671. PADEM_cfg_reg Register Field Descriptions

Bit	Field	Type	Reset	Description
31-11	NU	R/W	0h	Reserved
10	sc1	R/W	0h	IO Slew rate control : 0 : higher slew rate. 1: Lower slew rate.
9	pupdsel	R/W	0h	Pullup/PullDown Selection 0 -- Pull Down
8	pi	R/W	0h	Pull Enable/Pull Disable 0 -- Enable
7	oe_override	R/W	1h	Active Low Output Override

Copyright © 2025 Texas Instruments Incorporated

Table 6-1671. PADEM_cfg_reg Register Field Descriptions (continued)

Bit	Field	Type	Reset	Description
6	oe_override_ctrl	R/W	1h	Active Low Output Override Control : Write 1 to select Active low Output Override value to control IOs OE_N/GZ instead of the control from hardware
5	ie_override	R/W	0h	Active Low Input Override
4	ie_override_ctrl	R/W	0h	Active Low Input Override Control : Write 1 to select Active low Input Override value to control IOs IE_N/RXACTIVE_N instead of the control from hardware
3-0	func_sel	R/W	1h	Function select

6.2.9.118 PADEN_cfg_reg Register (Offset = 1D4h) [reset = C1h]

PADEN_cfg_reg is shown in and described in .

Return to the Summary Table.

Figure 6-1663. PADEN_cfg_reg Register

31	30	29	28	27	26	25	24
NU							
R/W-0h							
23	22	21	20	19	18	17	16
NU							
R/W-0h							
15	14	13	12	11	10	9	8
NU					sc1	pupdsel	pi
R/W-0h					R/W-0h	R/W-0h	R/W-0h
7	6	5	4	3	2	1	0
oe_override	oe_override_ctrl	ie_override	ie_override_ctrl	func_sel			
R/W-1h	R/W-1h	R/W-0h	R/W-0h	R/W-1h			

Table 6-1672. PADEN_cfg_reg Register Field Descriptions

Bit	Field	Type	Reset	Description
31-11	NU	R/W	0h	Reserved
10	sc1	R/W	0h	IO Slew rate control : 0 : higher slew rate. 1: Lower slew rate.
9	pupdsel	R/W	0h	Pullup/PullDown Selection 0 -- Pull Down
8	pi	R/W	0h	Pull Enable/Pull Disable 0 -- Enable
7	oe_override	R/W	1h	Active Low Output Override
6	oe_override_ctrl	R/W	1h	Active Low Output Override Control : Write 1 to select Active low Output Override value to control IOs OE_N/GZ instead of the control from hardware
5	ie_override	R/W	0h	Active Low Input Override
4	ie_override_ctrl	R/W	0h	Active Low Input Override Control : Write 1 to select Active low Input Override value to control IOs IE_N/RXACTIVE_N instead of the control from hardware
3-0	func_sel	R/W	1h	Function select

6.2.9.119 PADEO_cfg_reg Register (Offset = 1D8h) [reset = C1h]

PADEO_cfg_reg is shown in and described in .

Copyright © 2025 Texas Instruments Incorporated

Return to the Summary Table.

Figure 6-1664. PADEO_cfg_reg Register

31	30	29	28	27	26	25	24
NU							
R/W-0h							
23	22	21	20	19	18	17	16
NU							
R/W-0h							
15	14	13	12	11	10	9	8
NU					sc1	pupdsel	pi
R/W-0h					R/W-0h	R/W-0h	R/W-0h
7	6	5	4	3	2	1	0
oe_override	oe_override_ctrl	ie_override	ie_override_ctrl	func_sel			
R/W-1h	R/W-1h	R/W-0h	R/W-0h	R/W-1h			

Table 6-1673. PADEO_cfg_reg Register Field Descriptions

Bit	Field	Type	Reset	Description
31-11	NU	R/W	0h	Reserved
10	sc1	R/W	0h	IO Slew rate control : 0 : higher slew rate. 1: Lower slew rate.
9	pupdsel	R/W	0h	Pullup/PullDown Selection 0 -- Pull Down
8	pi	R/W	0h	Pull Enable/Pull Disable 0 -- Enable
7	oe_override	R/W	1h	Active Low Output Override
6	oe_override_ctrl	R/W	1h	Active Low Output Override Control : Write 1 to select Active low Output Override value to control IOs OE_N/GZ instead of the control from hardware
5	ie_override	R/W	0h	Active Low Input Override
4	ie_override_ctrl	R/W	0h	Active Low Input Override Control : Write 1 to select Active low Input Override value to control IOs IE_N/RXACTIVE_N instead of the control from hardware
3-0	func_sel	R/W	1h	Function select

6.2.9.120 PADEP_cfg_reg Register (Offset = 1DCh) [reset = C1h]

PADEP_cfg_reg is shown in and described in .

Return to the Summary Table.

Figure 6-1665. PADEP_cfg_reg Register

31	30	29	28	27	26	25	24
NU							
R/W-0h							
23	22	21	20	19	18	17	16
NU							
R/W-0h							
15	14	13	12	11	10	9	8
NU					sc1	pupdsel	pi
R/W-0h					R/W-0h	R/W-0h	R/W-0h

Copyright © 2025 Texas Instruments Incorporated

Figure 6-1665. PADEP_cfg_reg Register (continued)

7	6	5	4	3	2	1	0
oe_override	oe_override_ctrl	ie_override	ie_override_ctrl	func_sel			
R/W-1h	R/W-1h	R/W-0h	R/W-0h	R/W-1h			

Table 6-1674. PADEP_cfg_reg Register Field Descriptions

Bit	Field	Type	Reset	Description
31-11	NU	R/W	0h	Reserved
10	sc1	R/W	0h	IO Slew rate control : 0 : higher slew rate. 1: Lower slew rate.
9	pupdsel	R/W	0h	Pullup/PullDown Selection 0 -- Pull Down
8	pi	R/W	0h	Pull Enable/Pull Disable 0 -- Enable
7	oe_override	R/W	1h	Active Low Output Override
6	oe_override_ctrl	R/W	1h	Active Low Output Override Control : Write 1 to select Active low Output Override value to control IOs OE_N/GZ instead of the control from hardware
5	ie_override	R/W	0h	Active Low Input Override
4	ie_override_ctrl	R/W	0h	Active Low Input Override Control : Write 1 to select Active low Input Override value to control IOs IE_N/RXACTIVE_N instead of the control from hardware
3-0	func_sel	R/W	1h	Function select

6.2.9.121 USERMODEEN Register (Offset = 1F0h) [reset = 0h]

USERMODEEN is shown in and described in .

Return to the Summary Table.

Figure 6-1666. USERMODEEN Register

31	30	29	28	27	26	25	24	23	22	21	20	19	18	17	16	15	14	13	12	11	10	9	8	7	6	5	4	3	2	1	0
USERMODEEN																															
R/W-0h																															

Table 6-1675. USERMODEEN Register Field Descriptions

Bit	Field	Type	Reset	Description
31-0	USERMODEEN	R/W	0h	Write 0XADADADAD to enable user mode write access to IO CFG space

6.2.9.122 PADGLBLCFGREG Register (Offset = 1F4h) [reset = 0h]

PADGLBLCFGREG is shown in and described in .

Return to the Summary Table.

Figure 6-1667. PADGLBLCFGREG Register

31	30	29	28	27	26	25	24	23	22	21	20	19	18	17	16	15	14	13	12	11	10	9	8	7	6	5	4	3	2	1	0
PADGLBLCFGREG																															
R/W-0h																															

Copyright © 2025 Texas Instruments Incorporated

Table 6-1676. PADGLBLCFGREG Register Field Descriptions

Bit	Field	Type	Reset	Description
31-0	PADGLBLCFGREG	R/W	0h	2:0 : global_ie_n_ctl - Write 3'b111 to pass global_ie_n_val to IE_N/ RXACTIVE_N pin of all the IOs. 3 : global_ie_n_val - Active low 10:8 : global_oe_n_ctl - Write 3'b111 to pass global_oe_n_val to OE_N/GZ pin of all the IOs. 11 : global_oe_n_val - Active low 18:16 : global_pi_ctl - Write 3'b111 to pass global_pi_val and global_pu_val to all the IOs 19 : global_pi_val 20 : global_pu_val

6.2.9.123 IOCFGKICK0 Register (Offset = 1F8h) [reset = 0h]

IOCFGKICK0 is shown in and described in .

Return to the Summary Table.

Figure 6-1668. IOCFGKICK0 Register

31	30	29	28	27	26	25	24	23	22	21	20	19	18	17	16	15	14	13	12	11	10	9	8	7	6	5	4	3	2	1	0
IOCFGKICK0																															
R/W-0h																															

Table 6-1677. IOCFGKICK0 Register Field Descriptions

Bit	Field	Type	Reset	Description
31-0	IOCFGKICK0	R/W	0h	Kicker 0 Register. The value 83E7 0B13h must be written to KICK0 as part of the process to unlock the CPU write access to the above PIN MUX registers (including IOCFGKICK1)

6.2.9.124 IOCFGKICK1 Register (Offset = 1FCh) [reset = 0h]

IOCFGKICK1 is shown in and described in .

Return to the Summary Table.

Figure 6-1669. IOCFGKICK1 Register

31	30	29	28	27	26	25	24	23	22	21	20	19	18	17	16	15	14	13	12	11	10	9	8	7	6	5	4	3	2	1	0
IOCFGKICK1																															
R/W-0h																															

Table 6-1678. IOCFGKICK1 Register Field Descriptions

Bit	Field	Type	Reset	Description
31-0	IOCFGKICK1	R/W	0h	Kicker 1 Register. The value 95A4 F1E0h must be written to the KICK1 as part of the process to unlock the CPU write access to above PINMUX registers (excluding IOCFGKICK0). IOCFGKICK0 has to be written with 83E70B13h to enable access to IOCFGKICK1.

6.3 Device Clock Architecture

6.3.1 Clock Overview

Figure 6-1670 shows a high-level overview of the device clock architecture. The figure and the table captures the key clock sources and the configuration options available to select the appropriate clock source. The detailed structure is captured under each PLL clocking section.

Copyright © 2025 Texas Instruments Incorporated

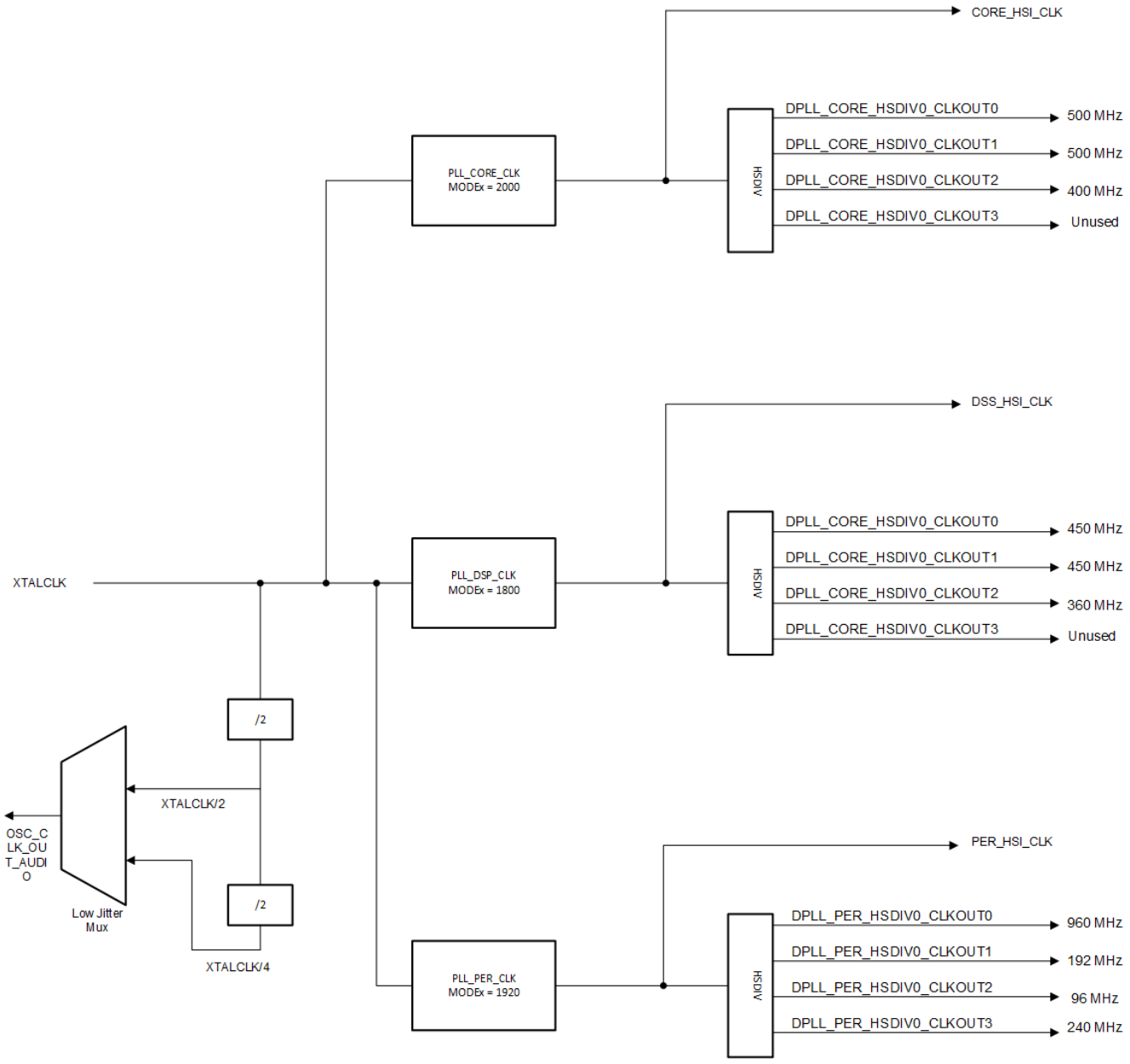

Figure 6-1670. Clock Tree Configuration

Table 6-1679. Clock Tree Configuration Table

PLL	Frequency (MODEx)	Output Line	Div Value (MODEx)	Clock Name	Frequency
PLL_CORE_CLK	2000	0	4	DPLL_CORE_HSDIV0_CLKOUT0	500 MHz
		1	4	DPLL_CORE_HSDIV0_CLKOUT1	500 MHz
		2	5	DPLL_CORE_HSDIV0_CLKOUT2	400 MHz

Copyright © 2025 Texas Instruments Incorporated

Table 6-1679. Clock Tree Configuration Table (continued)

PLL	Frequency (MODEx)	Output Line	Div Value (MODEx)	Clock Name	Frequency
PLL_DSP_CLK	1800	0	4	DPLL_DSP_HSDIV_CLKOUT0	450 MHz
		1	4	DPLL_DSP_HSDIV_CLKOUT1	450 MHz
		2	5	DPLL_DSP_HSDIV_CLKOUT2	360 MHz
PLL_PER_CLK	1920	0	2	DPLL_PER_HSDIV0_CLKOUT0	960 MHz
		1	10	DPLL_PER_HSDIV0_CLKOUT1	192 MHz
		2	20	DPLL_PER_HSDIV0_CLKOUT2	96 MHz
		3	8	DPLL_PER_HSDIV0_CLKOUT3	240 MHz

6.3.2 External Clocks

The clocks in the AM273x device to the supported peripherals are as depicted in Figure 6-1671.

Copyright © 2025 Texas Instruments Incorporated

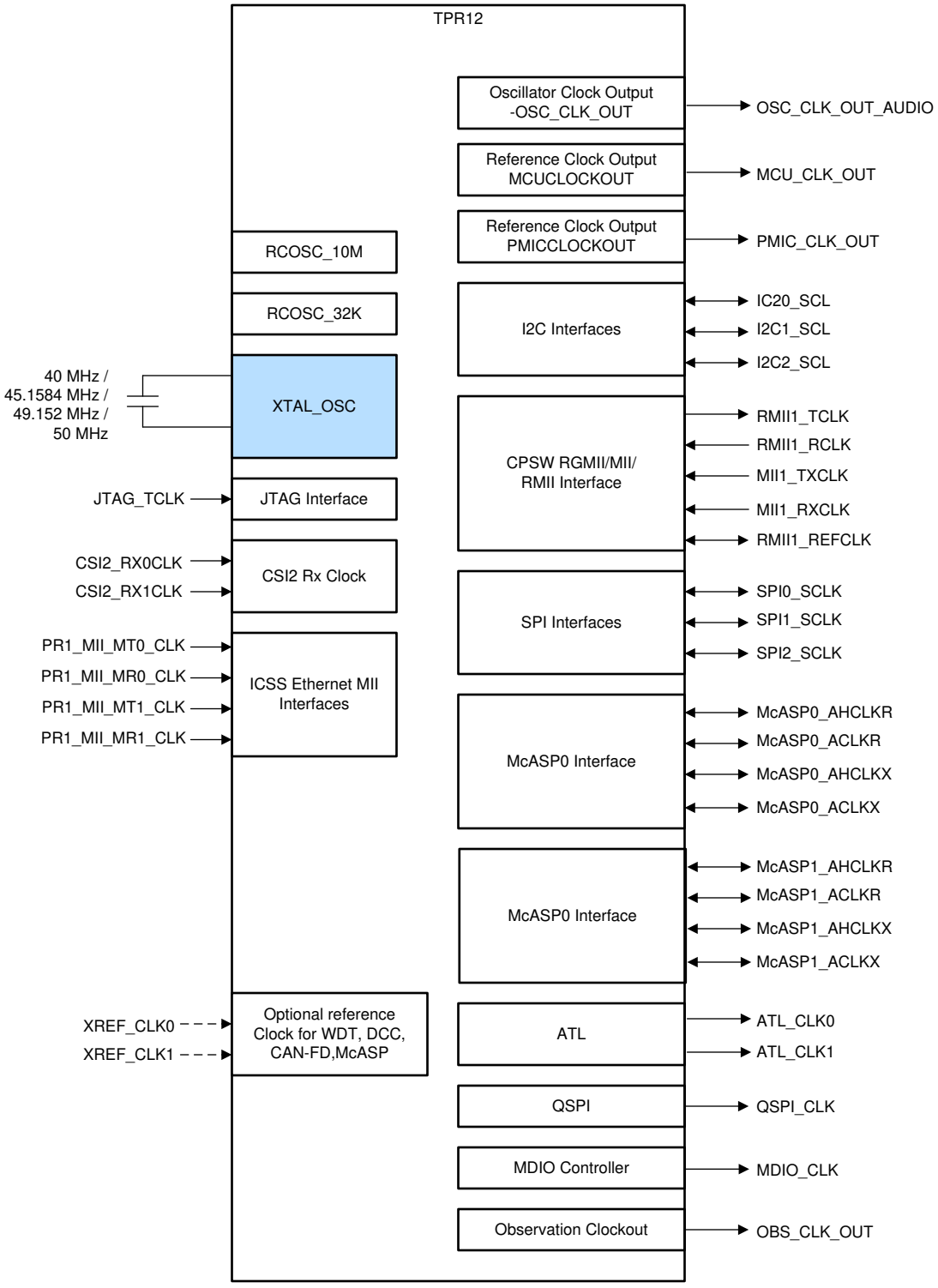

Figure 6-1671. External Clocks

Note

RCOSC_10M , RCOSC_32K : these two clocks are internal and not available for application.

Copyright © 2025 Texas Instruments Incorporated

Note

The ATL_CLK in the image is referring to RCSS_ATL_CLK

6.3.3 Clock Selection

Table 6-1680 lists the configuration options for the clock source, divider, and gating selections for different peripheral clocks.

Table 6-1680. Configuration Options

Clock Mux	Clock Sources		CLKSRCSEL MMR Control	CLKDIV MMR Control	CLKGATE.MMR Control
MSS_CR5F_CLK	0	WUCPUCLK	TOP_RCM:MSS_CR5_CLK_SRC_SEL:MSS_CR5_CLK_SRC_SEL_CLKSRCSEL	TOP_RCM:MSS_CR5_DIV_VAL:MSS_CR5_DIV_VAL_CLKDIV	TOP_RCM:MSS_CR5_CLK_GATE:MSS_CR5_CLK_GATE
	1	RCCLK10M			
	2	DPLL_CORE_HSDIV0_CLKOUT2			
	3	RCCLK10M			
	4	RCCLK10M			
	5	RCCLK10M			
	6	XTALCLK			
	7	RCCLK10M			
SYS_CLK	0	XTALCLK	TOP_RCM:MSS_CR5_CLK_SRC_SEL:MSS_CR5_CLK_SRC_SEL_CLKSRCSEL	TOP_RCM:SYS_CLK_DIV_VAL:SYS_CLK_DIV_VAL_CLKDIV	TOP_RCM:SYS_CLK_CLK_GATE:SYS_CLK_CLK_GATE
	1	RCCLK10M			
	2	DPLL_CORE_HSDIV0_CLKOUT2			
	3	RCCLK10M			
	4	RCCLK10M			
	5	RCCLK10M			
	6	WUCPUCLK			
	7	RCCLK10M			
HSI_CLK	0	PLL_CORE_CLK	TOP_RCM:HSI_CLK_SRC_SEL:HSI_CLK_SRC_SEL_CLKSRCSEL	TOP_RCM:HSI_DIV_VAL:HSI_DIV_VAL_CLKDIV	TOP_RCM:HSI_CLK_GATE:HSI_CLK_GATE
	1	PLL_CORE_CLK			
	2	PLL_DSP_CLK			
	3	PLL_PER_CLK			
	4	DPLL_CORE_HSDIV0_CLKOUT0			
	5	RCCLK10M			
	6	DPLL_DSP_HSDIV0_CLKOUT0			
	7	DPLL_PER_HSDIV0_CLKOUT0			
CSIRX	0	WUCPUCLK	TOP_RCM:CSIRX_CLK_SRC_SEL:CSIRX_CLK_SRC_SEL_CLKSRCSEL	TOP_RCM:CSIRX_DIV_VAL:CSIRX_DIV_VAL_CLKDIV	TOP_RCM:CSIRX_CLK_GATE:CSIRX_CLK_GATE
	1	RCCLK10M			
	2	DPLL_PER_HSDIV0_CLKOUT2			
	3	RCCLK10M			
	4	RCCLK10M			
	5	RCCLK10M			
	6	XTALCLK			
	7	RCCLK10M			

Copyright © 2025 Texas Instruments Incorporated

Table 6-1680. Configuration Options (continued)

Clock Mux	Clock Sources		CLKSRCSEL MMR Control	CLKDIV MMR Control	CLKGATE.MMR Control
TRC_CLKOUT	0	WUCPUCLK	TOP_RCM:TRCCLKOUT_CLK_SRC_SEL:TRCCLKOUT_CLK_SRC_SEL_CLKSRCSEL	TOP_RCM:TRCCLKOUT_DIV_VAL:TRCCLKOUT_DIV_VAL_CLKDIV	TOP_RCM:TRCCLKOUT_CLK_GATE:TRCCLKOUT_CLK_GATE
	1	DPLL_CORE_HSDIV0_CLKOUT1			
	2	DPLL_CORE_HSDIV0_CLKOUT2			
	3	DPLL_DSP_HSDIV0_CLKOUT2			
	4	DPLL_PER_HSDIV0_CLKOUT3			
	5	RCCLK10M			
	6	XTALCLK			
	7	RCCLK10M			
MCU_CLKOUT	0	WUCPUCLK	TOP_RCM:MCUCLKOUT_CLK_SRC_SEL:MCUCLKOUT_CLK_SRC_SEL_CLKSRCSEL	TOP_RCM:MCUCLKOUT_DIV_VAL:MCUCLKOUT_DIV_VAL_CLKDIV	TOP_RCM:MCUCLKOUT_CLK_GATE:MCUCLKOUT_CLK_GATE
	1	RCCLK10M			
	2	DPLL_CORE_HSDIV0_CLKOUT2			
	3	TIE_LOW			
	4	RCCLK10M			
	5	RCCLK10M			
	6	XTALCLK			
	7	RCCLK10M			
PMIC_CLKOUT	0	WUCPUCLK	TOP_RCM:PMICCLKOUT_CLK_SRC_SEL:PMICCLKOUT_CLK_SRC_SEL_CLKSRCSEL	TOP_RCM:PMICCLKOUT_DIV_VAL:PMICCLKOUT_DIV_VAL_CLKDIV	TOP_RCM:PMICCLKOUT_CLK_GATE:PMICCLKOUT_CLK_GATE
	1	RCCLK10M			
	2	DPLL_CORE_HSDIV0_CLKOUT2			
	3	TIE_LOW			
	4	RCCLK10M			
	5	RCCLK10M			
	6	XTALCLK			
	7	RCCLK10M			
OBS_CLKOUT	0	WUCPUCLK	TOP_RCM:OBSCLKOUT_CLK_SRC_SEL:OBSCLKOUT_CLK_SRC_SEL_CLKSRCSEL	TOP_RCM:OBSCLKOUT_DIV_VAL:OBSCLKOUT_DIV_VAL_CLKDIV	TOP_RCM:OBSCLKOUT_CLK_GATE:OBSCLKOUT_CLK_GATE
	1	DPLL_CORE_HSDIV0_CLKOUT2			
	2	DPLL_DSP_HSDIV0_CLKOUT1			
	3	DPLL_PER_HSDIV0_CLKOUT1			
	4	RCCLK10M			
	5	RCCLK10M			
	6	XTALCLK			
	7	RCCLK10M			

Copyright © 2025 Texas Instruments Incorporated

Table 6-1680. Configuration Options (continued)

Clock Mux	Clock Sources		CLKSRCSEL MMR Control	CLKDIV MMR Control	CLKGATE.MMR Control
MSS_RTIA_CLK	0	WUCPUCLK	MSS_RCM:MSS_RTIA_CLK_SRC_SEL:MSS_RTIA_CLK_SRC_SEL_CLKSRCSEL	MSS_RCM:MSS_RTIA_CLK_DIV_VAL:MSS_RTIA_CLK_DIV_VAL_CLKDIVR	MSS_RCM:MSS_RTIA_CLK_GATE:MSS_RTIA_CLK_GATE_GATED
	1	FE1_REF_CLK			
	2	SYS_CLK			
	3	DPLL_PER_HSDIV0_CLKOUT1			
	4	RCCLK10M			
	5	RCCLK10M			
	6	XREF_CLK0			
	7	RCCLK32K			
MSS_RTIB_CLK	0	WUCPUCLK	MSS_RCM:MSS_RTIB_CLK_SRC_SEL:MSS_RTIB_CLK_SRC_SEL_CLKSRCSEL	MSS_RCM:MSS_RTIB_CLK_DIV_VAL:MSS_RTIB_CLK_DIV_VAL_CLKDIVR	MSS_RCM:MSS_RTIB_CLK_GATE:MSS_RTIB_CLK_GATE_GATED
	1	FE1_REF_CLK			
	2	SYS_CLK			
	3	DPLL_PER_HSDIV0_CLKOUT1			
	4	RCCLK10M			
	5	RCCLK10M			
	6	XREF_CLK0			
	7	RCCLK32K			
MSS_RTIC_CLK	0	WUCPUCLK	MSS_RCM:MSS_RTIC_CLK_SRC_SEL:MSS_RTIC_CLK_SRC_SEL_CLKSRCSEL	MSS_RCM:MSS_RTIC_CLK_DIV_VAL:MSS_RTIC_CLK_DIV_VAL_CLKDIVR	MSS_RCM:MSS_RTIC_CLK_GATE:MSS_RTIC_CLK_GATE_GATED
	1	FE1_REF_CLK			
	2	SYS_CLK			
	3	DPLL_PER_HSDIV0_CLKOUT1			
	4	RCCLK10M			
	5	RCCLK10M			
	6	XREF_CLK0			
	7	RCCLK32K			
MSS_WDT_CLK	0	WUCPUCLK	MSS_RCM:MSS_WDT_CLK_SRC_SEL:MSS_WDT_CLK_SRC_SEL_CLKSRCSEL	MSS_RCM:MSS_WDT_CLK_DIV_VAL:MSS_WDT_CLK_DIV_VAL_CLKDIVR	MSS_RCM:MSS_WDT_CLK_GATE:MSS_WDT_CLK_GATE_GATED
	1	FE1_REF_CLK			
	2	SYS_CLK			
	3	DPLL_PER_HSDIV0_CLKOUT1			
	4	RCCLK10M			
	5	RCCLK10M			
	6	XREF_CLK0			
	7	RCCLK32K			

Copyright © 2025 Texas Instruments Incorporated

Table 6-1680. Configuration Options (continued)

Clock Mux	Clock Sources		CLKSRCSEL MMR Control	CLKDIV MMR Control	CLKGATE.MMR Control
MSS_QSPI_CLK	0	WUCPUCLK	MSS_RCM:MSS_QSPI_CLK_SRC_SEL:MSS_QSPI_CLK_SRC_SEL_CLKSRCSEL	MSS_RCM:MSS_QSPI_CLK_DIV_VAL:MSS_QSPI_CLK_DIV_VAL_CLKDIVR	MSS_RCM:MSS_QSPI_CLK_GATE:MSS_QSPI_CLK_GATE_GATED
	1	DPLL_DSP_HSDIV0_CLKOUT2			
	2	SYS_CLK			
	3	DPLL_PER_HSDIV0_CLKOUT1			
	4	DPLL_CORE_HSDIV0_CLKOUT2			
	5	RCCLK10M			
	6	XREF_CLK0			
	7	RCCLK10M			
MSS_SPIA_CLK	0	WUCPUCLK	MSS_RCM:MSS_SPIA_CLK_SRC_SEL:MSS_SPIA_CLK_SRC_SEL_CLKSRCSEL	MSS_RCM:MSS_SPIA_CLK_DIV_VAL:MSS_SPIA_CLK_DIV_VAL_CLKDIVR	MSS_RCM:MSS_SPIA_CLK_GATE:MSS_SPIA_CLK_GATE_GATED
	1	XTALCLK			
	2	SYS_CLK			
	3	DPLL_PER_HSDIV0_CLKOUT1			
	4	DPLL_CORE_HSDIV0_CLKOUT2			
	5	RCCLK10M			
	6	XREF_CLK0			
	7	RCCLK10M			
MSS_SPIB_CLK	0	WUCPUCLK	MSS_RCM:MSS_SPIB_CLK_SRC_SEL:MSS_SPIB_CLK_SRC_SEL_CLKSRCSEL	MSS_RCM:MSS_SPIB_CLK_DIV_VAL:MSS_SPIB_CLK_DIV_VAL_CLKDIVR	MSS_RCM:MSS_SPIB_CLK_GATE:MSS_SPIB_CLK_GATE_GATED
	1	XTALCLK			
	2	SYS_CLK			
	3	DPLL_PER_HSDIV0_CLKOUT1			
	4	DPLL_CORE_HSDIV0_CLKOUT2			
	5	RCCLK10M			
	6	XREF_CLK0			
	7	RCCLK10M			
MSS_I2C_CLK	0	WUCPUCLK	MSS_RCM:MSS_I2C_CLK_SRC_SEL:MSS_I2C_CLK_SRC_SEL_CLKSRCSEL	MSS_RCM:MSS_I2C_CLK_DIV_VAL:MSS_I2C_CLK_DIV_VAL_CLKDIVR	MSS_RCM:MSS_I2C_CLK_GATE:MSS_I2C_CLK_GATE_GATED
	1	XTALCLK			
	2	SYS_CLK			
	3	DPLL_PER_HSDIV0_CLKOUT1			
	4	DPLL_CORE_HSDIV0_CLKOUT2			
	5	RCCLK10M			
	6	XREF_CLK0			
	7	RCCLK10M			

Copyright © 2025 Texas Instruments Incorporated

Table 6-1680. Configuration Options (continued)

Clock Mux	Clock Sources		CLKSRCSEL MMR Control	CLKDIV MMR Control	CLKGATE.MMR Control
MSS_UARTA_CLK	0	WUCPUCLK	MSS_RCM:MSS_SCIA_CLK_SRC_SEL:MSS_SCIA_CLK_SRC_SEL_CLKSRCSEL	MSS_RCM:MSS_SCIA_CLK_DIV_VAL:MSS_SCIA_CLK_DIV_VAL_CLKDIVR	MSS_RCM:MSS_SCIA_CLK_GATE:MSS_SCIA_CLK_GATE_GATED
	1	XTALCLK			
	2	SYS_CLK			
	3	DPLL_PER_HSDIV0_CLKOUT1			
	4	DPLL_CORE_HSDIV0_CLKOUT2			
	5	RCCLK10M			
	6	XREF_CLK0			
	7	RCCLK10M			
MSS_UARTB_CLK	0	WUCPUCLK	MSS_RCM:MSS_SCIB_CLK_SRC_SEL:MSS_SCIB_CLK_SRC_SEL_CLKSRCSEL	MSS_RCM:MSS_SCIB_CLK_DIV_VAL:MSS_SCIB_CLK_DIV_VAL_CLKDIVR	MSS_RCM:MSS_SCIB_CLK_GATE:MSS_SCIB_CLK_GATE_GATED
	1	XTALCLK			
	2	SYS_CLK			
	3	DPLL_PER_HSDIV0_CLKOUT1			
	4	DPLL_CORE_HSDIV0_CLKOUT2			
	5	RCCLK10M			
	6	XREF_CLK0			
	7	RCCLK10M			
MSS_MCANA_CLK	0	WUCPUCLK	MSS_RCM:MSS_MCANA_CLK_SRC_SEL:MSS_MCANA_CLK_SRC_SEL_CLKSRCSEL	MSS_RCM:MSS_MCANA_CLK_DIV_VAL:MSS_MCANA_CLK_DIV_VAL_CLKDIVR	MSS_RCM:MSS_MCANA_CLK_GATE:MSS_MCANA_CLK_GATE_GATED
	1	DPLL_DSP_HSDIV0_CLKOUT2			
	2	SYS_CLK			
	3	DPLL_PER_HSDIV0_CLKOUT1			
	4	DPLL_CORE_HSDIV0_CLKOUT2			
	5	RCCLK10M			
	6	XREF_CLK0			
	7	XREF_CLK1			
MSS_MCANB_CLK	0	WUCPUCLK	MSS_RCM:MSS_MCANB_CLK_SRC_SEL:MSS_MCANB_CLK_SRC_SEL_CLKSRCSEL	MSS_RCM:MSS_MCANB_CLK_DIV_VAL:MSS_MCANB_CLK_DIV_VAL_CLKDIVR	MSS_RCM:MSS_MCANB_CLK_GATE:MSS_MCANB_CLK_GATE_GATED
	1	DPLL_DSP_HSDIV0_CLKOUT2			
	2	SYS_CLK			
	3	DPLL_PER_HSDIV0_CLKOUT1			
	4	DPLL_CORE_HSDIV0_CLKOUT2			
	5	RCCLK10M			
	6	XREF_CLK0			
	7	XREF_CLK1			

Copyright © 2025 Texas Instruments Incorporated

Table 6-1680. Configuration Options (continued)

Clock Mux	Clock Sources		CLKSRCSEL MMR Control	CLKDIV MMR Control	CLKGATE.MMR Control
MSS_CPTS_CLK	0	WUCPUCLK	MSS_RCM:MSS_CPTS_CLK_SRC_SEL:MSS_CPTS_CLK_SRC_SEL_CLKSRCSEL	MSS_RCM:MSS_CPTS_CLK_DIV_VAL:MSS_CPTS_CLK_DIV_VAL_CLKDIVR	MSS_RCM:MSS_CPTS_CLK_GATE:MSS_CPTS_CLK_GATE_GATED
	1	XTALCLK			
	2	SYS_CLK			
	3	DPLL_CORE_HSDIV0_CLKOUT1			
	4	DPLL_CORE_HSDIV0_CLKOUT2			
	5	RCCLK10M			
	6	RCCLK10M			
	7	RCCLK10M			
MSS_CPSW_CLK	0	WUCPUCLK	MSS_RCM:MSS_CPSW_CLK_SRC_SEL:MSS_CPSW_CLK_SRC_SEL_CLKSRCSEL	MSS_RCM:MSS_CPSW_CLK_DIV_VAL:MSS_CPSW_CLK_DIV_VAL_CLKDIVR	MSS_RCM:MSS_CPSW_CLK_GATE:MSS_CPSW_CLK_GATE_GATED
	1	XTALCLK			
	2	SYS_CLK			
	3	RCCLK10M			
	4	DPLL_CORE_HSDIV0_CLKOUT2			
	5	RCCLK10M			
	6	RCCLK10M			
	7	RCCLK10M			
HSM_RTI_CLK	0	WUCPUCLK	MSS_RCM:HSM_RTIA_CLK_SRC_SEL:HSM_RTIA_CLK_SRC_SEL_CLKSRCSEL	MSS_RCM:HSM_RTIA_CLK_DIV_VAL:HSM_RTIA_CLK_DIV_VAL_CLKDIVR	MSS_RCM:HSM_RTIA_CLK_GATE:HSM_RTIA_CLK_GATE_GATED
	1	XTALCLK			
	2	SYS_CLK			
	3	DPLL_PER_HSDIV0_CLKOUT1			
	4	RCCLK10M			
	5	RCCLK10M			
	6	XREF_CLK0			
	7	RCCLK32K			
HSM_WDT_CLK	0	WUCPUCLK	MSS_RCM:HSM_WDT_CLK_SRC_SEL:HSM_WDT_CLK_SRC_SEL_CLKSRCSEL	MSS_RCM:HSM_WDT_CLK_DIV_VAL:HSM_WDT_CLK_DIV_VAL_CLKDIVR	MSS_RCM:HSM_WDT_CLK_GATE:HSM_WDT_CLK_GATE_GATED
	1	XTALCLK			
	2	SYS_CLK			
	3	DPLL_PER_HSDIV0_CLKOUT1			
	4	RCCLK10M			
	5	RCCLK10M			
	6	XREF_CLK0			
	7	RCCLK32K			
HSM_RTC_CLK	0	WUCPUCLK	MSS_RCM:HSM_RTC_CLK_SRC_SEL:HSM_RTC_CLK_SRC_SEL_CLKSRCSEL	MSS_RCM:HSM_RTC_CLK_DIV_VAL:HSM_RTC_CLK_DIV_VAL_CLKDIVR	MSS_RCM:HSM_RTC_CLK_GATE:HSM_RTC_CLK_GATE_GATED
	1	XTALCLK			
	2	SYS_CLK			
	3	DPLL_PER_HSDIV0_CLKOUT1			
	4	RCCLK10M			
	5	RCCLK10M			
	6	XREF_CLK0			
	7	RCCLK32K			

Copyright © 2025 Texas Instruments Incorporated

Table 6-1680. Configuration Options (continued)

Clock Mux	Clock Sources		CLKSRCSEL MMR Control	CLKDIV MMR Control	CLKGATE.MMR Control
HSM_DMTA_CLK	0	WUCPUCLK	MSS_RCM:HSM_DMTA_CLK_SRC_SEL:HSM_DMTA_CLK_SRC_SEL_CLKSRCSEL	MSS_RCM:HSM_DMTA_CLK_DIV_VAL:HSM_DMTA_CLK_DIV_VAL_CLKDIVR	MSS_RCM:HSM_DMTA_CLK_GATE:HSM_DMTA_CLK_GATE_GATED
	1	XTALCLK			
	2	SYS_CLK			
	3	DPLL_PER_HSDIV0_CLKOUT1			
	4	RCCLK10M			
	5	RCCLK10M			
	6	XREF_CLK0			
	7	RCCLK32K			
HSM_DMTB_CLK	0	WUCPUCLK	MSS_RCM:HSM_DMTB_CLK_SRC_SEL:HSM_DMTB_CLK_SRC_SEL_CLKSRCSEL	MSS_RCM:HSM_DMTB_CLK_DIV_VAL:HSM_DMTB_CLK_DIV_VAL_CLKDIVR	MSS_RCM:HSM_DMTB_CLK_GATE:HSM_DMTB_CLK_GATE_GATED
	1	XTALCLK			
	2	SYS_CLK			
	3	DPLL_PER_HSDIV0_CLKOUT1			
	4	RCCLK10M			
	5	RCCLK10M			
	6	XREF_CLK0			
	7	RCCLK32K			
MII100_CLK	NA	DPLL_CORE_HSDIV0_CLKOUT1	NA	MSS_RCM:MSS_MII100_CLK_DIV_VAL:MSS_MII100_CLK_DIV_VAL_CLKDIVR	MSS_RCM:MSS_MII100_CLK_GATE:MSS_MII100_CLK_GATE_GATED
MII10_CLK	NA	DPLL_CORE_HSDIV0_CLKOUT1	NA	MSS_RCM:MSS_MII10_CLK_DIV_VAL:MSS_MII10_CLK_DIV_VAL_CLKDIVR	MSS_RCM:MSS_MII10_CLK_GATE:MSS_MII10_CLK_GATE_GATED
RGMII_CLK	NA	DPLL_CORE_HSDIV0_CLKOUT1	NA	MSS_RCM:MSS_RGMII_CLK_DIV_VAL:MSS_RGMII_CLK_DIV_VAL_CLKDIVR	MSS_RCM:MSS_RGMII_CLK_GATE:MSS_RGMII_CLK_GATE_GATED
GPADC_CLK	NA	SYS_CLK	NA	MSS_RCM:MSS_GPADC_CLK_DIV_VAL:MSS_GPADC_CLK_DIV_VAL_CLKDIVR	MSS_RCM:MSS_GPADC_CLK_GATE:MSS_GPADC_CLK_GATE_GATED
DSS_DSP_CLK	0	WUCPUCLK	DSS_RCM:DSS_DSP_CLK_SRC_SEL:DSS_DSP_CLK_SRC_SEL_CLKSRCSEL	DSS_RCM:DSS_DSP_CLK_DIV_VAL:DSS_DSP_CLK_DIV_VAL_CLKDIV	DSS_RCM:DSS_DSP_CLK_GATE:DSS_DSP_CLK_GATE_GATED
	1	XTALCLK			
	2	DPLL_DSP_HSDIV0_CLKOUT1			
	3	DPLL_DSP_HSDIV0_CLKOUT1_DITH			
	4	DPLL_CORE_HSDIV0_CLKOUT1			
	5	RCCLK10M			
	6	RCCLK10M			
	7	RCCLK10M			

Copyright © 2025 Texas Instruments Incorporated

Table 6-1680. Configuration Options (continued)

Clock Mux	Clock Sources		CLKSRCSEL MMR Control	CLKDIV MMR Control	CLKGATE.MMR Control
DSS_HWA_CLK	0	MSS_CR5F_CLK_P2	DSS_RCM:DSS_HWA_CLK_SRC_SEL:DSS_HWA_CLK_SRC_SEL_CLKSRCSEL	NA	DSS_RCM:DSS_HWA_CLK_GATE:DSS_HWA_CLK_GATE_GATED
	1	SYS_CLK			
	2				
	3				
	4				
	5				
	6				
	7				
DSS_RTIA_CLK	0	WUCPUCLK	DSS_RCM:DSS_RTIA_CLK_SRC_SEL:DSS_RTIA_CLK_SRC_SEL_CLKSRCSEL	DSS_RCM:DSS_RTIA_CLK_DIV_VAL:DSS_RTIA_CLK_DIV_VAL_CLKDIV	DSS_RCM:DSS_RTIA_CLK_GATE:DSS_RTIA_CLK_GATE_GATED
	1	XTALCLK			
	2	SYS_CLK			
	3	DPLL_PER_HSDIV0_CLKOUT1			
	4	RCCLK10M			
	5	RCCLK10M			
	6	XREF_CLK0			
	7	RCCLK32K			
DSS_RTIB_CLK	0	WUCPUCLK	DSS_RCM:DSS_RTIB_CLK_SRC_SEL:DSS_RTIB_CLK_SRC_SEL_CLKSRCSEL	DSS_RCM:DSS_RTIB_CLK_DIV_VAL:DSS_RTIB_CLK_DIV_VAL_CLKDIV	DSS_RCM:DSS_RTIB_CLK_GATE:DSS_RTIB_CLK_GATE_GATED
	1	XTALCLK			
	2	SYS_CLK			
	3	DPLL_PER_HSDIV0_CLKOUT1			
	4	RCCLK10M			
	5	RCCLK10M			
	6	XREF_CLK0			
	7	RCCLK32K			
DSS_WDT_CLK	0	WUCPUCLK	DSS_RCM:DSS_WDT_CLK_SRC_SEL:DSS_WDT_CLK_SRC_SEL_CLKSRCSEL	DSS_RCM:DSS_WDT_CLK_DIV_VAL:DSS_WDT_CLK_DIV_VAL_CLKDIV	DSS_RCM:DSS_WDT_CLK_GATE:DSS_WDT_CLK_GATE_GATED
	1	XTALCLK			
	2	SYS_CLK			
	3	DPLL_PER_HSDIV0_CLKOUT1			
	4	RCCLK10M			
	5	RCCLK10M			
	6	XREF_CLK0			
	7	RCCLK32K			
DSS_SCIA_CLK	0	WUCPUCLK	DSS_RCM:DSS_SCIA_CLK_SRC_SEL:DSS_SCIA_CLK_SRC_SEL_CLKSRCSEL	DSS_RCM:DSS_SCIA_CLK_DIV_VAL:DSS_SCIA_CLK_DIV_VAL_CLKDIV	DSS_RCM:DSS_SCIA_CLK_GATE:DSS_SCIA_CLK_GATE_GATED
	1	XTALCLK			
	2	SYS_CLK			
	3	RCCLK32K			
	4	RCCLK10M			
	5	RCCLK10M			
	6	DPLL_PER_HSDIV0_CLKOUT1			
	7	RCCLK10M			

Copyright © 2025 Texas Instruments Incorporated

Table 6-1680. Configuration Options (continued)

Clock Mux	Clock Sources		CLKSRCSEL MMR Control	CLKDIV MMR Control	CLKGATE.MMR Control
RCSS_SCIA_CLK	0	WUCPUCLK	RCSS_RCM:RCSS_SCIA_CLK_SRC_SEL:RCSS_SCIA_CLK_SRC_SEL_CLKSRCSEL	RCSS_RCM:RCSS_SCIA_CLK_DIV_VAL:RCSS_SCIA_CLK_DIV_VAL_CLKDIV	RCSS_RCM:RCSS_SCIA_CLK_GATE:RCSS_SCIA_CLK_GATE_GATED
	1	XTALCLK			
	2	SYS_CLK			
	3	DPLL_PER_HSDIV0_CLKOUT1			
	4	RCCLK10M			
	5	RCCLK10M			
	6	RCCLK10M			
	7	RCCLK10M			
RCSS_SPIA_CLK	0	WUCPUCLK	RCSS_RCM:RCSS_SPIA_CLK_SRC_SEL:RCSS_SPIA_CLK_SRC_SEL_CLKSRCSEL	RCSS_RCM:RCSS_SPIA_CLK_DIV_VAL:RCSS_SPIA_CLK_DIV_VAL_CLKDIV	RCSS_RCM:RCSS_SPIA_CLK_GATE:RCSS_SPIA_CLK_GATE_GATED
	1	XTALCLK			
	2	SYS_CLK			
	3	DPLL_PER_HSDIV0_CLKOUT1			
	4	RCCLK10M			
	5	RCCLK10M			
	6	RCCLK10M			
	7	RCCLK10M			
RCSS_SPIB_CLK	0	WUCPUCLK	RCSS_RCM:RCSS_SPIB_CLK_SRC_SEL:RCSS_SPIB_CLK_SRC_SEL_CLKSRCSEL	RCSS_RCM:RCSS_SPIB_CLK_DIV_VAL:RCSS_SPIB_CLK_DIV_VAL_CLKDIV	RCSS_RCM:RCSS_SPIB_CLK_GATE:RCSS_SPIB_CLK_GATE_GATED
	1	XTALCLK			
	2	SYS_CLK			
	3	DPLL_PER_HSDIV0_CLKOUT1			
	4	RCCLK10M			
	5	RCCLK10M			
	6	RCCLK10M			
	7	RCCLK10M			
RCSS_MCASP_REF0_CLK	0	WUCPUCLK	RCSS_RCM:RCSS_MCASPA_REF0_CLK_SRC_SEL:RCSS_MCASPA_REF0_CLK_SRC_SEL_CLKSRCSEL	RCSS_RCM:RCSS_MCASPA_REF0_CLK_DIV_VAL:RCSS_MCASPA_REF0_CLK_DIV_VAL_CLKDIV	RCSS_RCM:RCSS_MCASPA_REF0_CLK_GATE:RCSS_MCASPA_REF0_CLK_GATE_GATED
	1	RCSS_ATL_CLKOUT0			
	2	RCSS_ATL_CLKOUT1			
	3	RCSS_ATL_CLKOUT2			
	4	RCSS_ATL_CLKOUT3			
	5	RCCLK10M			
	6	XREF_CLK0			
	7	XREF_CLK1			
RCSS_MCASP_REF1_CLK	0	WUCPUCLK	RCSS_RCM:RCSS_MCASPA_REF1_CLK_SRC_SEL:RCSS_MCASPA_REF1_CLK_SRC_SEL_CLKSRCSEL	RCSS_RCM:RCSS_MCASPA_REF1_CLK_DIV_VAL:RCSS_MCASPA_REF1_CLK_DIV_VAL_CLKDIV	RCSS_RCM:RCSS_MCASPA_REF1_CLK_GATE:RCSS_MCASPA_REF1_CLK_GATE_GATED
	1	RCSS_ATL_CLKOUT0			
	2	RCSS_ATL_CLKOUT1			
	3	RCSS_ATL_CLKOUT2			
	4	RCSS_ATL_CLKOUT3			
	5	RCCLK10M			
	6	XREF_CLK0			
	7	XREF_CLK1			

Copyright © 2025 Texas Instruments Incorporated

Table 6-1680. Configuration Options (continued)

Clock Mux	Clock Sources		CLKSRCSEL MMR Control	CLKDIV MMR Control	CLKGATE.MMR Control
RCSS_MCASP_REF2_CLK	0	WUCPUCLK	RCSS_RCM:RCSS_MCASPB_REF0_CLK_SRC_SEL:RCSS_MCASPB_REF0_CLK_SRC_SEL_CLKSRCSEL	RCSS_RCM:RCSS_MCASPB_REF0_CLK_DIV_VAL:RCSS_MCASPB_REF0_CLK_DIV_VAL_CLKDIV	RCSS_RCM:RCSS_MCASPB_REF0_CLK_GATE:RCSS_MCASPB_REF0_CLK_GATE_GATED
	1	RCSS_ATL_CLKOUT0			
	2	RCSS_ATL_CLKOUT1			
	3	RCSS_ATL_CLKOUT2			
	4	RCSS_ATL_CLKOUT3			
	5	RCCLK10M			
	6	XREF_CLK0			
	7	XREF_CLK1			
RCSS_MCASP_REF3_CLK	0	WUCPUCLK	RCSS_RCM:RCSS_MCASPB_REF1_CLK_SRC_SEL:RCSS_MCASPB_REF1_CLK_SRC_SEL_CLKSRCSEL	RCSS_RCM:RCSS_MCASPB_REF1_CLK_DIV_VAL:RCSS_MCASPB_REF1_CLK_DIV_VAL_CLKDIV	RCSS_RCM:RCSS_MCASPB_REF1_CLK_GATE:RCSS_MCASPB_REF1_CLK_GATE_GATED
	1	RCSS_ATL_CLKOUT0			
	2	RCSS_ATL_CLKOUT1			
	3	RCSS_ATL_CLKOUT2			
	4	RCSS_ATL_CLKOUT3			
	5	RCCLK10M			
	6	XREF_CLK0			
	7	XREF_CLK1			
RCSS_MCASP_REF4_CLK	0	WUCPUCLK	RCSS_RCM:RCSS_MCASPC_REF0_CLK_SRC_SEL:RCSS_MCASPC_REF0_CLK_SRC_SEL_CLKSRCSEL	RCSS_RCM:RCSS_MCASPC_REF0_CLK_DIV_VAL:RCSS_MCASPC_REF0_CLK_DIV_VAL_CLKDIV	RCSS_RCM:RCSS_MCASPC_REF0_CLK_GATE:RCSS_MCASPC_REF0_CLK_GATE_GATED
	1	RCSS_ATL_CLKOUT0			
	2	RCSS_ATL_CLKOUT1			
	3	RCSS_ATL_CLKOUT2			
	4	RCSS_ATL_CLKOUT3			
	5	RCCLK10M			
	6	XREF_CLK0			
	7	XREF_CLK1			
RCSS_MCASP_REF5_CLK	0	WUCPUCLK	RCSS_RCM:RCSS_MCASPC_REF1_CLK_SRC_SEL:RCSS_MCASPC_REF1_CLK_SRC_SEL_CLKSRCSEL	RCSS_RCM:RCSS_MCASPC_REF1_CLK_DIV_VAL:RCSS_MCASPC_REF1_CLK_DIV_VAL_CLKDIV	RCSS_RCM:RCSS_MCASPC_REF1_CLK_GATE:RCSS_MCASPC_REF1_CLK_GATE_GATED
	1	RCSS_ATL_CLKOUT0			
	2	RCSS_ATL_CLKOUT1			
	3	RCSS_ATL_CLKOUT2			
	4	RCSS_ATL_CLKOUT3			
	5	RCCLK10M			
	6	XREF_CLK0			
	7	XREF_CLK1			
RCSS_MCASP_AV0_CLK	0	WUCPUCLK	RCSS_MCASPA_AUX_CLK_SRC_SEL Register (Offset = 34h) [reset = X]	RCSS_RCM:RCSS_MCASPA_AUX_CLK_DIV_VAL:RCSS_MCASPA_AUX_CLK_DIV_VAL_CLKDIV	RCSS_RCM:RCSS_MCASPA_AUX_CLK_GATE:RCSS_MCASPA_AUX_CLK_GATE_GATED
	1	WUCPUCLK			
	2	DPLL_PER_HSDIV0_CLKOUT1			
	3	DPLL_PER_HSDIV0_CLKOUT2			
	4	DPLL_PER_HSDIV0_CLKOUT3			
	5	RCCLK10M			
	6	XREF_CLK0			
	7	XREF_CLK1			

Copyright © 2025 Texas Instruments Incorporated

Table 6-1680. Configuration Options (continued)

Clock Mux	Clock Sources		CLKSRCSEL MMR Control	CLKDIV MMR Control	CLKGATE.MMR Control
RCSS_MCASP_AV1_CLK	0	WUCPUCLK	RCSS_RCM:RCSS_MCASPB_AUX_CLK_SRC_SEL:RCSS_MCASPB_AUX_CLK_SRC_SEL_CLKSRCSEL	RCSS_RCM:RCSS_MCASPB_AUX_CLK_DIV_VAL:RCSS_MCASPB_AUX_CLK_DIV_VAL_CLKDIV	RCSS_RCM:RCSS_MCASPB_AUX_CLK_GATE:RCSS_MCASPB_AUX_CLK_GATE_GATED
	1	WUCPUCLK			
	2	DPLL_PER_HSDIV0_CLKOUT1			
	3	DPLL_PER_HSDIV0_CLKOUT2			
	4	DPLL_PER_HSDIV0_CLKOUT3			
	5	RCCLK10M			
	6	XREF_CLK0			
	7	XREF_CLK1			
RCSS_MCASP_AV2_CLK	0	WUCPUCLK	RCSS_RCM:RCSS_MCASPC_AUX_CLK_SRC_SEL:RCSS_MCASPC_AUX_CLK_SRC_SEL_CLKSRCSEL	RCSS_RCM:RCSS_MCASPC_AUX_CLK_DIV_VAL:RCSS_MCASPC_AUX_CLK_DIV_VAL_CLKDIV	RCSS_RCM:RCSS_MCASPC_AUX_CLK_GATE:RCSS_MCASPC_AUX_CLK_GATE_GATED
	1	WUCPUCLK			
	2	DPLL_PER_HSDIV0_CLKOUT1			
	3	DPLL_PER_HSDIV0_CLKOUT2			
	4	DPLL_PER_HSDIV0_CLKOUT3			
	5	RCCLK10M			
	6	XREF_CLK0			
	7	XREF_CLK1			
RCSS_I2CA_CLK	0	WUCPUCLK	RCSS_RCM:RCSS_I2CA_CLK_SRC_SEL:RCSS_I2CA_CLK_SRC_SEL_CLKSRCSEL	RCSS_RCM:RCSS_I2CA_CLK_DIV_VAL:RCSS_I2CA_CLK_DIV_VAL_CLKDIV	RCSS_RCM:RCSS_I2CA_CLK_GATE:RCSS_I2CA_CLK_GATE_GATED
	1	XTALCLK			
	2	SYS_CLK			
	3	DPLL_PER_HSDIV0_CLKOUT1			
	4	RCCLK10M			
	5	RCCLK10M			
	6	RCCLK10M			
	7	RCCLK10M			
RCSS_I2CB_CLK	0	WUCPUCLK	RCSS_RCM:RCSS_I2CB_CLK_SRC_SEL:RCSS_I2CB_CLK_SRC_SEL_CLKSRCSEL	RCSS_RCM:RCSS_I2CB_CLK_DIV_VAL:RCSS_I2CB_CLK_DIV_VAL_CLKDIV	RCSS_RCM:RCSS_I2CB_CLK_GATE:RCSS_I2CB_CLK_GATE_GATED
	1	XTALCLK			
	2	SYS_CLK			
	3	DPLL_PER_HSDIV0_CLKOUT1			
	4	RCCLK10M			
	5	RCCLK10M			
	6	RCCLK10M			
	7	RCCLK10M			

Copyright © 2025 Texas Instruments Incorporated

Table 6-1680. Configuration Options (continued)

Clock Mux	Clock Sources		CLKSRCSEL MMR Control	CLKDIV MMR Control	CLKGATE.MMR Control
RCSS_ATL_CLK	0	WUCPUCLK	RCSS_RCM:RCSS_ATL_CLK_SRC_SEL:RCSS_ATL_CLK_SRC_SEL_CLKSRCSEL	RCSS_RCM:RCSS_ATL_CLK_DIV_VAL:RCSS_ATL_CLK_DIV_VAL_CLKDIV	RCSS_RCM:RCSS_ATL_CLK_GATE:RCSS_ATL_CLK_GATE_GATED
	1	XTALCLK			
	2	SYS_CLK			
	3	DPLL_PER_HSDIV0_CLKOUT1			
	4	DPLL_PER_HSDIV0_CLKOUT2			
	5	RCCLK10M			
	6	DPLL_PER_HSDIV0_CLKOUT3			
	7	RCCLK10M			

Note

Note that MII100 is 5 MHz and MII10 is 50 MHz

6.3.4 Analog Modules

6.3.4.1 ADPLL

General features of the ADPLL-J module are:

- Low Jitter Phase-Locked Loop
- RHEA, OCP, and Direct Access interface
- Programmable 8-bit input divider: N
- Programmable 12-bit integer, 18-bit fractional loop multiplier: M
- Programmable 7-bit post divider: M2
- Digital control and loop filter
- User-selectable multiple in-built oscillators for power-jitter optimization
- Primary output clock on digital core domain: CLKOUT = (M / (N+1))*CLKINP*(1/M2)
- Additional output clock on internal LDO domain: CLKOUTLDO = (M / (N+1))*CLKINP*(1/M2)
- Internal oscillator clock on internal LDO domain: CLKDCOLDO = (M / (N+1))*CLKINP
- Output clock gating control: CLKOUTEN / CLKOUTLDOEN / CLKOUTDCOLDOEN
- Digital LOCK indicators for frequency and phase lock
- Fast re-lock
- Input to output bypass on CLKOUT
- Bypass programmable 4-bit divider: N2: CLKOUT = CLKINP / (N2 + 1)
- Optional low frequency bypass clock control: ULOWCLKEN CLKOUT = CLKINPULOW
- Power management modes:
- Power down
- Idle bypass
- Stop Clock-input Bypass
- Retention
- Output clock Spread spectrum clocking supported

The ADPLLLJ is a low jitter PLL with a 2-GHz maximum output. ADPLLLJ has a predivide feature which allows user to divide, for instance, a 24-MHz or 26-MHz reference clock to 1 MHz and then multiply up to 2 GHz maximum. All PLLs will come-up in bypass mode at reset. SW needs to program all the PLL settings appropriately and then wait for PLL to be locked.

Spread Spectrum Clocking

The module supports spread spectrum clocking (SSC) on its output clocks. SSC is used to spread the spectral peaking of the clock to reduce any electromagnetic interference (EMI) that may be caused due to the clock's

Copyright © 2025 Texas Instruments Incorporated

fundamental or any of its harmonics. When SSC is enabled the clock's spectrum is spread by the amount of frequency spread, and the attenuation is given by the ratio of the frequency spread (Δf) and the modulation frequency (fm), i.e., 10*log10(Δf/fm) dB.

Note

Please refer MMWAVE-MCUPLUS-SDK for reference implementation of this feature.

6.3.4.2 ADPLLJ Programming Model

6.3.4.2.1 ADPLLJ Programming Sequence

The following sequence is for PLL_PER. Similar registers exist for PLL_CORE and PLL_DSP.

1. Program the values M and N2 in TOP_RCM: PLL_PER_MN2DIV.
2. Program the values of N and M2 in TOP_RCM:PLL_PER_M2NDIV.
3. Program the Fractional M in TOP_RCM:PLL_PER_FRACDIV_FRACTIONALM.
4. Program the Sigma Delta Divider (SD) in TOP_RCM:PLL_PER_FRACDIV_REGSD.
5. Copy the NWELL TRIM from EFUSE to TOP_RCM:PLL_PER_CLKCTRL_NWELLTRIM.
6. Write 0x0 to TOP_RCM:PLL_PER_CLKCTRL_IDLE.
7. Write 0x1 to TOP_RCM:PLL_PER_TENABLE.
8. Write 0x1 to TOP_RCM:PLL_PER_CLKCTRL_TINTZ.
9. Write 0x0 to TOP_RCM:PLL_PER_TENABLE.
10. Write 0x1 to TOP_RCM: PLL_PER_TENABLEDIV.
11. Write 0x0 to TOP_RCM: PLL_PER_TENABLEDIV.
12. Poll Lock Status by reading TOP_RCM:PLL_PER_STATUS_PHASELOCK until it is 0x1.

6.3.4.2.2 HS Divider Programming Sequence

1. Program the CLKOUT0 Divider value in TOP_RCM:PLL_PER_HSDIVIDER_CLKOUT0_DIV.
2. Program the CLKOUT0 Divider value in TOP_RCM:PLL_PER_HSDIVIDER_CLKOUT1_DIV.
3. Program the CLKOUT0 Divider value in TOP_RCM:PLL_PER_HSDIVIDER_CLKOUT2_DIV.
4. Program the CLKOUT0 Divider value in TOP_RCM:PLL_PER_HSDIVIDER_CLKOUT3_DIV.
5. Write 0x1 to TOP_RCM:PLL_PER_HSDIVIDER_TENABLEDIV.
6. Write 0x0 to TOP_RCM:PLL_PER_HSDIVIDER_TENABLEDIV.
7. Enable the CLKOUT0 by write 0x1 to TOP_RCM:PLL_PER_HSDIVIDER_CLKOUT0_GATE_CTRL.
8. Enable the CLKOUT0 by write 0x1 to TOP_RCM:PLL_PER_HSDIVIDER_CLKOUT1_GATE_CTRL.
9. Enable the CLKOUT0 by write 0x1 to TOP_RCM:PLL_PER_HSDIVIDER_CLKOUT2_GATE_CTRL.
10. Enable the CLKOUT0 by write 0x1 to TOP_RCM:PLL_PER_HSDIVIDER_CLKOUT3_GATE_CTRL.

6.3.4.2.3 ADPLLLJ (Low Jitter DPLL)

The ADPLLLJ is a low jitter PLL with a 2-GHz maximum output. ADPLLLJ has a predivide feature which allows user to divide, for instance, a 24-MHz or 26-MHz reference clock to 1 MHz and then multiply up to 2 GHz maximum.

All PLLs will come-up in bypass mode at reset. SW needs to program all the PLL settings appropriately and then wait for PLL to be locked. For more details, see the configuration procedure for each PLL.

Copyright © 2025 Texas Instruments Incorporated

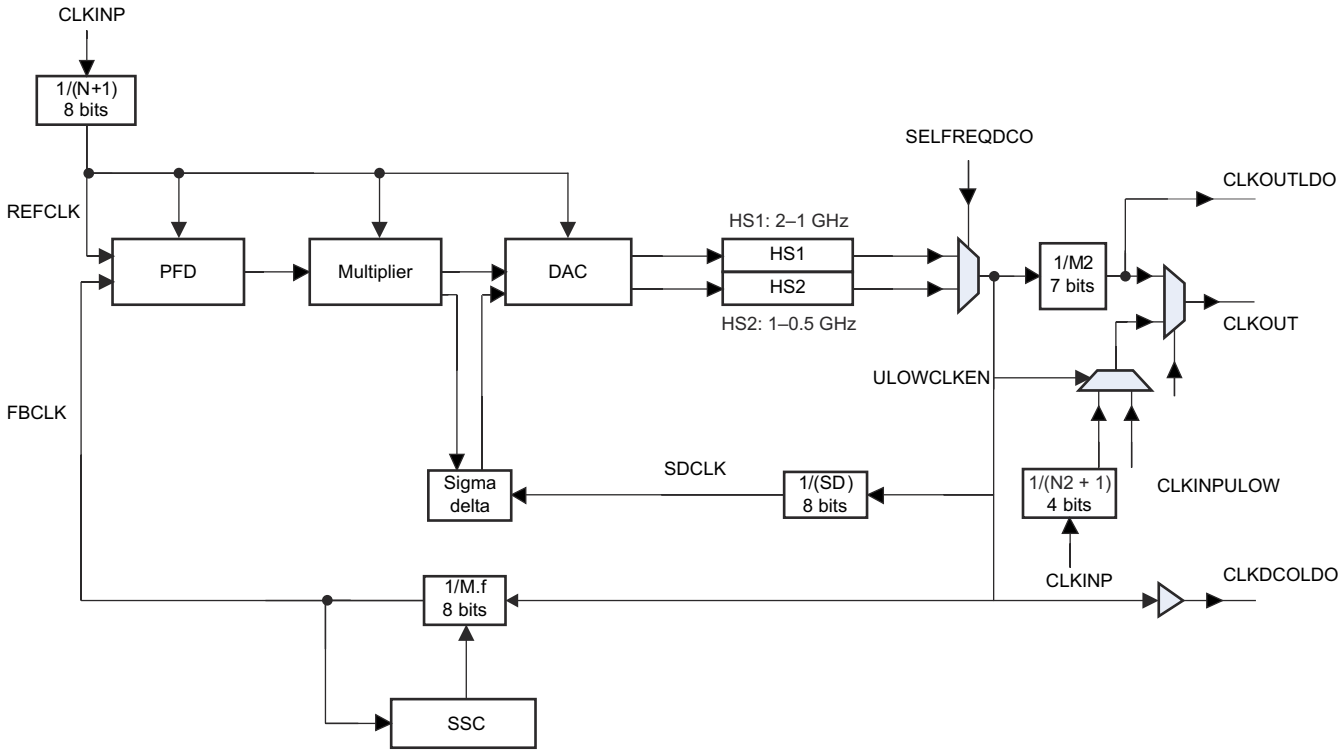

Figure 6-1672. Basic Structure of the ADPLLLJ

The peripheral PLL and EXTDEV PLL belong to type ADPLLLJ:

The DPLL has two input clocks:

- CLKINP: Reference input clock
- CLKINPULOW: Bypass input clock.

The DPLL has two internal clocks:

- REFCLK (Internal reference clock): This is generated by dividing the input clock CLKINP by the programmed value N+1. The entire loop of the PLL runs on the REFCLK.

  Here, REFCLK = CLKINP/(N+1).
- CLKDCO (Internal Oscillator clock.):This is the raw clock directly out of the digitally controlled oscillator (DCO) before the post-divider. The PLL output clock is synthesized by an internal oscillator which is phase locked to the refclk. There are two oscillators built within ADPLLLJ. The oscillators are user selectable based on the synthesized output clock frequency requirement. In locked condition, CLKDCO = CLKINP *[M/(N+1)].

The ADPLLLJ lock frequency is defined as follows: f_{DPLL} = CLKDCOOUT

The DPLL has three external output clocks:

- CLKOUTLDO: Primary output clock in VDDLDOOUT domain. Bypass option not available on this output.

  CLKOUTLDO = (M / (N+1))*CLKINP*(1/M2)
- CLKOUT:

  Primary output clock on digital core domain

  CLKOUT = (M / (N+1))*CLKINP*(1/M2)
- CLKDCOLDO:

Copyright © 2025 Texas Instruments Incorporated

Oscillator (DCO) output clock before post-division in VDDLDOOUT domain. Bypass option is not available on this output.

CLKDCOLDO = (M / (N+1))*CLKINP.

All clock outputs of the DPLL can be gated. The Control module provides the DPLL with a clock gating control signal to enable or disable the clock, and the DPLL provides the PRCM module with a clock activity status signal to let the PRCM module hardware know when the clock is effectively running or effectively gated. Output clock gating control for various clockouts: CLKOUTEN/CLKOUTLDOEN/CLKDCOLDOEN.

6.3.4.2.3.1 Clock Functions

Table 6-1681. Output Clocks in Locked Condition

Pin Name	Frequency
CLKOUT	[M /(N+1)] * CLKINP * [1/M2]
CLKOUTLDO	[M /(N+1)] * CLKINP * [1/M2]
CLKDCOOUT	[M /(N+1)] * CLKINP

Table 6-1682. Output Clocks Before Lock and During Relock Modes

Pin Name	Frequency	Comments
CLKOUT	CLKINP/(N2+1)	ULOWCLKEN='0'
	CLKINPLOW	ULOWCLKEN='1'
CLKDCOLDO	LOW	
CLKOUTLDO	LOW	

6.3.4.2.4 M2 and N2 Change On-the-Fly

The dividers M2 and N2 are designed to change on the fly and provide a glitch-free frequency switch from the old to new frequencies. In other words, they can be changed while the PLL is in a locked condition, without having to switch to bypass mode. A status toggle bit will give an indication if the new divisor was accepted. These dividers can also be changed in bypass mode, and the new divisor value will be reflected on output after the PLL relocks. For more details, see the PLL configuration procedures for each PLL.

6.4 Power Domains

The device has two power domains:

- Always-on power domain: This power domain supplies power to entire device except for the DSP core. This domain cannot be switched off dynamically within the device.
- DSP power domain: The DSP core inside the DSP subsystem is placed on switchable power domain. This feature can be used to reduce power consumption of the device when the DSP core is not in use. By default, the state of this power domain is OFF.

The DSP power domain provides a way to lower power consumption. Other system level power states or modes are not supported by the device.

6.4.1 DSP Power Domain

The C66x DSP is off by default on bootup. The DSS_RCM controls the power cycling of the DSP. Software can trigger a power on/off sequence by writing to the DSP_PD registers in DSS_RCM space.

6.4.1.1 Software Sequence To Power On DSP

1. Unmask the wakeup trigger related to DSS_DSP_WAKEUP. This is DSP interrupt number 16. Thus, unmask the 16th bit in the register DSS_RCM.DSP_PD_WAKEUP_MASK0 by writing 0xFFFEFFFF
2. Trigger DSP wakeup by writing 0x1 to register DSS_RCM.DSP_PD_TRIGGER_WAKU.
3. Poll DSS_RCM.DSP_PD_STATUS.STATE for the value 13. This indicates that the L2 memory can now be written to or preloaded with code.
4. Download the DSP code into L2.

Copyright © 2025 Texas Instruments Incorporated

5. Write 0x0 to DSS_RCM.DSP_PD_CTRL.PROC_HALT to unhalt the processor and begin execution.

6.4.1.2 Software Sequence To Power OFF DSP

1. Ensure that all previous registered events during the previous power down are cleared.
2. Set up the DSP interrupt routine for DSS_DSP_PDC_INT (Gem event number : 118) as below:
   a. Set the bit DSP_ICFG.PDCCMD.GEMPD.
   b. Execute the idle instruction
3. If DSP powers up in autonomous mode without the program download, set the DSS_REG.GEMPWRSMCFG4.PWRSMLRSTHALT bit to 0x0.
4. Unmask the events to use as wakeup events in DSS_RCM:DSP_PD_WAKEUP_MASK[0-2].
5. Unmask the events to receive as hardware event pulses after the next power up in DSS_RCM:DSP_PD_MISSED_EVENT_MASK [0-2].
6. Mask all interrupts from DSP by setting the DSS_RCM:DSP_PD_CTRL:DSP_PD_CTRL_INTERRUPT_MASK field to 0x1.
7. Trigger a power down by setting the DSS_RCM:DSP_PD_TRIGGER_SLEEPfield to 0x1, and wait in a while loop. This triggers the interrupt DSS_DSP_PDC_INT, followed by the power-down of the DSP core by the control module.
8. The state of the DSP power domain can be polled by other main subsystem R5F cores to ensure the DSP power down. DSS_RCM:DSP_PD_STATUS_PD_STATUS field

6.4.2 DSP Subsystem L3 Power Domain

The DSS L3 memory can be controlled from DSS_RCM registers by the software.

By default, all the L3 memory is Power ON.

When partially switching off banks, it is the software's responsibility to ensure that the banks are disabled from the last 256 KB bank, that is, DSS L3 BANK D3. A bank should not be powered off if all its higher banks are not powered off. For example, if DSS L3 BANK D1 is powered down, BANK D2 and D3 are also powered down.

Table 6-1683. Banks

Bank 256 KB	Bank Name	Control Registers
0	DSS L3 BANK A0	DSS_L3_BANKA0_PD_CTRL_AGOODINDSS_L3_BANKA0_PD_CTRL_AONINDSS_L3_BANKA0_PD_CTRL_ISO
1	DSS L3 BANK A1	DSS_L3_BANKA1_PD_CTRL_AGOODINDSS_L3_BANKA1_PD_CTRL_AONINDSS_L3_BANKA1_PD_CTRL_ISO
2	DSS L3 BANK A2	DSS_L3_BANKA2_PD_CTRL_AGOODINDSS_L3_BANKA2_PD_CTRL_AONINDSS_L3_BANKA2_PD_CTRL_ISO
3	DSS L3 BANK A3	DSS_L3_BANKA3_PD_CTRL_AGOODINDSS_L3_BANKA3_PD_CTRL_AONINDSS_L3_BANKA3_PD_CTRL_ISO
4	DSS L3 BANK B0	DSS_L3_BANKB0_PD_CTRL_AGOODINDSS_L3_BANKB0_PD_CTRL_AONINDSS_L3_BANKB0_PD_CTRL_ISO
5	DSS L3 BANK B1	DSS_L3_BANKB1_PD_CTRL_AGOODINDSS_L3_BANKB1_PD_CTRL_AONINDSS_L3_BANKB1_PD_CTRL_ISO
6	DSS L3 BANK B2	DSS_L3_BANKB2_PD_CTRL_AGOODINDSS_L3_BANKB2_PD_CTRL_AONINDSS_L3_BANKB2_PD_CTRL_ISO
7	DSS L3 BANK B3	DSS_L3_BANKB3_PD_CTRL_AGOODINDSS_L3_BANKB3_PD_CTRL_AONINDSS_L3_BANKB3_PD_CTRL_ISO
8	DSS L3 BANK C0	DSS_L3_BANKC0_PD_CTRL_AGOODINDSS_L3_BANKC0_PD_CTRL_AONINDSS_L3_BANKC0_PD_CTRL_ISO
9	DSS L3 BANK C1	DSS_L3_BANKC1_PD_CTRL_AGOODINDSS_L3_BANKC1_PD_CTRL_AONINDSS_L3_BANKC1_PD_CTRL_ISO
10	DSS L3 BANK C2	DSS_L3_BANKC2_PD_CTRL_AGOODINDSS_L3_BANKC2_PD_CTRL_AONINDSS_L3_BANKC2_PD_CTRL_ISO

Copyright © 2025 Texas Instruments Incorporated

Table 6-1683. Banks (continued)

Bank 256 KB	Bank Name	Control Registers
11	DSS L3 BANK C3	DSS_L3_BANKC3_PD_CTRL_AGOODINDSS_L3_BANKC3_PD_CTRL_AONINDSS_L3_BANKC3_PD_CTRL_ISO
12	DSS L3 BANK D0	DSS_L3_BANKD0_PD_CTRL_AGOODINDSS_L3_BANKD0_PD_CTRL_AONINDSS_L3_BANKD0_PD_CTRL_ISO
13	DSS L3 BANK D1	DSS_L3_BANKD1_PD_CTRL_AGOODINDSS_L3_BANKD1_PD_CTRL_AONINDSS_L3_BANKD1_PD_CTRL_ISO
14	DSS L3 BANK D2	DSS_L3_BANKD2_PD_CTRL_AGOODINDSS_L3_BANKD2_PD_CTRL_AONINDSS_L3_BANKD2_PD_CTRL_ISO
15	DSS L3 BANK D3	DSS_L3_BANKD3_PD_CTRL_AGOODINDSS_L3_BANKD3_PD_CTRL_AONINDSS_L3_BANKB3_PD_CTRL_ISO

6.5 Resets

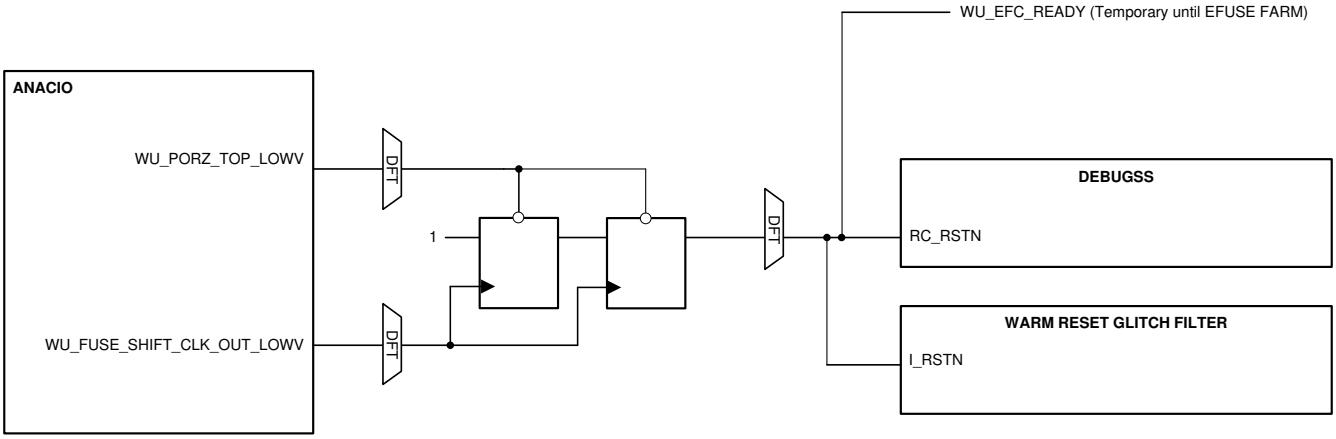

Figure 6-1673. Resets

Two device resets are available that can be controlled from the device pins: the power-on reset pin NRESET and the bidirectional WARM_RESET signal. The warm reset signal is implemented as an I/O, so that an external monitor can be used to detect changes to the state of the internal warm reset control signal.

Device registers can capture recent reset events, and can be used by software to manage failure recovery. Certain registers in the device are immune to WARM_RESET, and can only be reset by power-on reset.

The registers immune to WARM_RESET are:

- Reset Cause Registers in TOPRCM and MSSRCM
  - MSS_RST_STATUS
  - SYS_RST_CAUSE
- SOP and Clock Status registers in TOPRCM
  - SYS_RST_CAUSE
  - ANA_REG_CLK_STATUS_REG
  - ANA_REG_WU_MODE_REG_LOWV
  - ANA_REG_WU_STATUS_REG_LOWV
  - ANA_REG_WU_SPARE_OUT_LOWV
- BOOT INFO Registers in MSS_CTRL: MSS_BOOT_INFO_REG0-7
- All Efuse Registers in TOP CTRL

In addition to WARM_RESET and power-on reset, there are some local resets. This table summarizes the available local reset sources that are supported.

Copyright © 2025 Texas Instruments Incorporated

Table 6-1684. Available Reset Registers

Reset Register	Subsystem	Description
DSS_RST_CTRL	DSP Subsystem	Reset control for DSP Subsystem Data should be loaded as multibit. Write 3'b000: Reset is not asserted by SW Write 3'b111 : Reset is asserted by SW See Section 7.2.2.30 for more details
MSS_CR5SS_POR_RST_CTRL	R5SS	Software needs to ensure the state of the Device/IP before configuring. Writing '111' will assert por reset to R5SS. See Section 7.2.3.76 for details
MSS_CR5SSA_RST_CTRL	CR5A and MSS_CR5A_VIM	Software needs to ensure the state of the Device/IP before configuring. Writing' 111' will reset CR5A and MSS_CR5A_VIM. See Section 7.2.3.77 for more details.
MSS_CR5SSB_RST_CTRL	CR5B and MSS_CR5B_VIM	Software needs to ensure the state of the Device/IP before configuring. Writing '111' will reset CR5B and MSS_CR5B_VIM. See Section 7.2.3.78 for details
MSS_CR5A_RST_CTRL	CR5A	Software needs to ensure the state of the Device/IP before configuring. Writing '111' will reset CR5A only. See Section 7.2.3.79 for details.
MSS_CR5B_RST_CTRL	CR5B	Software needs to ensure the state of the Device/IP before configuring. Writing 111' will reset CR5B only. See Section 7.2.3.80 for details.
MSS_VIMA_RST_CTRL	MSS_CR5A_VIM	Software needs to ensure the state of the Device/IP before configuring. Writing '111' will reset MSS_CR5A_VIM. See Section 7.2.3.81 for more details.
MSS_VIMB_RST_CTRL	MSS_CR5B_VIM	Software needs to ensure the state of the Device/IP before configuring. Writing '111' will reset MSS_CR5B_VIM. See Section 7.2.3.82 for more details.
DSS_DSP_RST_CTRL	DSS DSP Data	Write to bits 10-8 for Local Reset control for DSS DSP Data. Write 3'b000: Reset is not asserted by SW. Write 3'b111 : Reset is asserted by SW See Section 7.2.4.56 for details.

Copyright © 2025 Texas Instruments Incorporated

Device includes the following processor core and accelerators:

- MCU Subsystem ARM Cortex dual core lockstep R5F
- DSP Subsystem TI C66x DSP
- Radar Processing Hardware Accelerators
- Radar Processing M4 Subsystem

7.1 Main Subsystem Cortex R5F

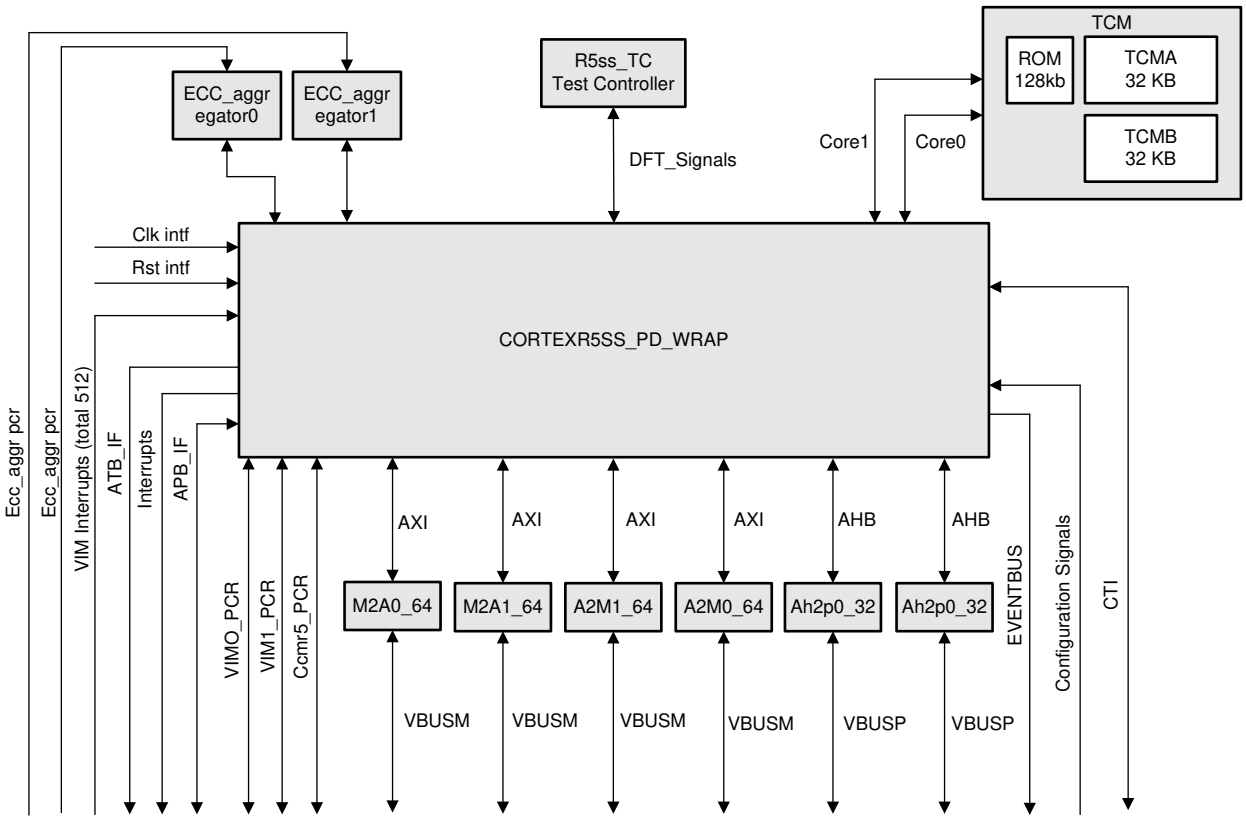

Figure 7-1. Main Subsystem

The Main SubSystem is a dual-core implementation of the Arm Cortex-R5F processor configured for split/lock operation. It also includes accompanying memories (L1 caches and tightly-coupled memories), standard Arm® CoreSight™ debug and trace architecture, integrated Vectored Interrupt Manager (VIM), ECC Aggregators, and various other modules for protocol conversion and address translation for easy integration into the SoC.

7.1.1 Main ARM SubSystem Features

The MSS supports the following features:

Copyright © 2025 Texas Instruments Incorporated

- ARMv7-R architecture with the following extensions:
  - Basic SIMD extension for integer and floating-point vector operations
  - Vector Floating Point Version 3 (VFPv3) with Single/Double Precision
  - Dynamic branch prediction with a global history buffer, and a 4-entry return stack
- Lock step and dual core modes are supported:
  - Switching to dual core mode is possible by the application (if switching to performance mode is enabled by EFUSE), even if the boot has happened in lock step mode – using a CPU reset triggered by application software.
- L1 memory architecture (per each CPU in split mode, or single lock-step CPU):
  - 16KByte I-Cache with 64-bit ECC
  - 16Kbyte D-cache with 32-bit ECC
- L2 Interface
  - 64-bit Controller interface for peripheral access
  - 64-bit Target interface for cache and TCM access
  - 32-bit Controller interface for MCU peripherals
  - ECC on data. Redudancy on Control bus
- Vectored Interrupt Manager with ECC protection on Vector Table RAM
  - VIM1 and VIM2 in lockstep pair when CPU cores are in lock step mode
- Static (boot time) configuration for either lockstep mode or dual-CPU mode
- Mechanism to clock gate the CPU and comparator logic in a non-Lockstep mode.
- CPU Self-Test Controller for CPU core, VIM, and Comparator modules
- PBIST controller for test of all the RAMs
- Support to test ECC functionality in safety-critical applications
- Built in debug features
  - Up to 8 hardware breakpoints per CPU
  - Up to 8 watch points per CPU
- 32-bit Target Debug interface to access Debug components (CTI, ETM, ATB)
- Trace interface to a Core Sight ETM-R5
- Performance Monitoring Unit (PMU)

7.1.2 TCM Initialization

Auto-init module has been implemented for initializing the TCMs. Paths from TCMA and TCMB are timing-critical, so the initialization of these memories occur through the test path. Initialization of TCMA and TCMB occurs in parallel.

Below are the registers used for the TCM initialization

- Writing 1 to MSS_CTRL:MSS_<A/B>TCM_MEM_INIT:MSS_<A/B>TCM_MEM_INIT_MEM_INIT starts the mem-init for MSS_TCM<A/B>_CR5A/B.
- Reading 1 from MSS_CTRL: MSS_<A/B>TCM_MEM_INIT_DONE: MSS_<A/B>TCM_MEM_INIT_DONE_MEM_INIT_DONE confirms the end of initialization for MSS_TCM<A/B>_CR5A/B.
- Writing 1 to MSS_CTRL: MSS_<A/B>TCM_MEM_INIT_DONE: MSS_<A/B>TCM_MEM_INIT_DONE_MEM_INIT_DONE clears the field.
- Reading 1 from MSS_CTRL: MSS_<A/B>TCM_MEM_INIT_STATUS: MSS_<A/B>TCM_MEM_INIT_STATUS_MEM_STATUS confirms progress of initialization for MSS_TCM<A/B>_CR5A/B.

7.1.3 TCM ROM-RAM SWAP

7.1.3.1 R5 as Master

Sequence for Swapping for ROM with RAM:

Copyright © 2025 Texas Instruments Incorporated

1. Write ‘3’b111’ to “MSS_CTRL: R5_ROM_ECLIPSE: R5_ROM_ECLIPSE_MEMSWAP_WAIT”. This ensures swapping happens only on CR5A/B reset.
2. Write ‘3’b111’ to to “MSS_CTRL: R5_ROM_ECLIPSE: R5_ROM_ECLIPSE_MEMSWAP”. This decides whether to swap or not.
3. Write ‘0xFFFFFFFF’ to “MSS_RCM:RST_WFICHECK” to ensure Reset-Sequencer would look for ‘WFI’ state of CR5A/B before asserting the reset.
4. Write ‘3’b111’ to to “MSS_CTRL: R5_CONTROL: R5_CONTROL_RESET_FSM_TRIGGER”. This will trigger the reset sequencer which will be waiting for WFI from CR5A/B as we are ensuring step-3 is done.
5. Go to “WFI” with arm-command “asm(wfi)”.
6. R5 goes through a reset-cycle and starts booting.
7. Read bit9 of “MSS_RCM: MSS_RST_STATUS:MSS_RST_STATUS_CAUSE”. That being ‘1’ will ensure reset is happened because of Reset-Sequencer.
8. Write ‘3’b111’ to “MSS_RCM: MSS_RST_CAUSE_CLR:MSS_RST_CAUSE_CLR_CLR” will the clear the “MSS_RCM: MSS_RST_STATUS:MSS_RST_STATUS_CAUSE” register.

7.1.3.2 HSM as Master

HSM can only follow the below sequence before unhalting CR5A. HSM will never know the state of CR5A after unhalting it.

Sequence for Swapping for ROM with RAM:

1. Write ‘3’b000’ to “MSS_CTRL: R5_ROM_ECLIPSE: R5_ROM_ECLIPSE_MEMSWAP_WAIT”. This ensures swapping happens immediately after changing the “MSS_CTRL: R5_ROM_ECLIPSE: R5_ROM_ECLIPSE_MEMSWAP”.
2. Write ‘3’b111’ to to “MSS_CTRL: R5_ROM_ECLIPSE: R5_ROM_ECLIPSE_MEMSWAP”. This decides whether to swap or not.
3. Swapping is done. So now HSM can unhalt the CR5A by writing ‘3’b000’ to MSS_CTRL: R5_COREA_HALT: R5_COREA_HALT_HALT”

7.1.3.3 Address Information

For use cases where the devices will be operating in lockstep mode, the TCMA and TCMB ROM sizes are 32KB.

Before Eclipsing, the addresses are as follows in Table 7-1.

Table 7-1. Address Information

Address	Region	Details
0x0	TCMA_ROM (128KB)	Dedicated Rom for R5 CORE-A
0x1FFFF		
0x20000	TCMA0_RAM (16KB)	Dedicated-Ram for R5 CORE-A
0x23FFF		
0x24000	TCMA1_RAM (16KB)	Gives an TCM_ERROR during Dual core mode
0x27FFF		
0x80000	TCMB0_RAM (16KB)	Dedicated-Ram for R5 CORE-A
0x83FFF		
0x84000	TCMB1_RAM (16KB)	Gives an TCM_ERROR during Dual core mode
0x87FFF		

After eclipsing, TCMA RAM address is relocated to start at 0x0, (up to 32KB). TCMB, L2, and L3 addresses do not change.

Copyright © 2025 Texas Instruments Incorporated

7.1.4 Lock-Step to Dual Core Switching

1. Write 3'b111 to MSS_CTRL: R5_CONTROL: R5_CONTROL_LOCK_STEP_SWITCH_WAIT. This ensures switching happens only on CR5A/B reset.
2. Write 3'b000 to MSS_CTRL: R5_CONTROL: R5_CONTROL_LOCK_STEP. This decides whether to switch or not.
3. Write 0xFFFFFFFF to MSS_RCM:RST_WFICHECK to ensure the Reset-Sequencer looks for WFI state of CR5A/B before asserting the reset.
4. Write 3'b111 to MSS_CTRL: R5_CONTROL: R5_CONTROL_RESET_FSM_TRIGGER. This triggers the reset sequencer, which is waiting for WFI from CR5A/B as it ensures step-3 is done. Go to WFI with arm-command asm(wfi).
5. R5F goes through a reset-cycle and starts booting.
6. Read bit9 of MSS_RCM: MSS_RST_STATUS:MSS_RST_STATUS_CAUSE. That being '1' ensures the reset has happened because of the Reset-Sequencer.
7. Write 3'b111 to MSS_RCM: MSS_RST_CAUSE_CLR:MSS_RST_CAUSE_CLR_CLR to clear the MSS_RCM: MSS_RST_STATUS:MSS_RST_STATUS_CAUSE register.

Note

The switch can only be performed from Lock Step mode to Dual core mode and not vice versa. This switch cannot be done multiple times; it is allowed only once.

7.1.5 Vectored Interrupt Manager (VIM) Module

This chapter describes the behavior of the vectored interrupt manager (VIM) module of the device family.

7.1.5.1 VIM Overview

The VIM aggregates device interrupts and sends them to the R5F CPU(s). It can be used in either split or lockstep configuration. In split, it has two independent interrupt cores, one per CPU. In lockstep, CPU1 acts as a diagnostic on CPU0; only CPU0's outputs are used but all outputs are compared to CPU1 to provide diagnostic coverage.

The VIM module supports the following features:

- 256 interrupt inputs per R5F core
- Each interrupt has its own 4-bit programmable priority
  - Defined via the INTPRIORITY_j register
  - The VIM provides support for priority interruption of interrupts
- Each interrupt has its own enable mask
  - Interrupt enable is done via the INTR_EN_SET_j register
  - Interrupt disable is done via the INTR_EN_CLR_j register
- Each interrupt can be programmed as either an IRQ or FIQ
  - Defined via the INTMAP_j register
- Each interrupt has its own programmable 32-bit vector address associated with it
  - Defined via the INTVECTOR_j register
  - Protected with SECDED
- One IRQn and one FIQn output per core
- Vectored interrupt interface
  - Compatible with R5F VIC port
- Default vector provided when a double-bit error is detected
- Split or lockstep capable
  - In lockstep mode, only interrupts connected to VIM interrupt core 0 are available
- Software interrupt generation

Copyright © 2025 Texas Instruments Incorporated

7.1.5.2 VIM Interrupt Inputs

The VIM supports 256 interrupt inputs per core. Each interrupt can be either a level or a pulse (both active-high). The interrupt mapping for the two R5F cores can be found in Chapter 9, *Interrupts*.

7.1.5.3 VIM Interrupt Outputs

The VIM has two interrupt outputs per core:

- *CoreN_IRQn*: This is a normal interrupt for core *N* (active-low level). It can be serviced via the VIC interface or through the MMR interface. Whenever an interrupt input goes high, if that interrupt is mapped as an IRQ (via the INTMAP_j register) and is enabled (via the INTR_EN_SET_j register), then it will cause an IRQ to assert
- *CoreN_FIQn*: This is a fast (or non-maskable) interrupt for core *N* (active-low level). FIQs always have priority over IRQs. An FIQ can be serviced through the MMR interface. Whenever an interrupt input goes high, if that interrupt is mapped as an FIQ and is enabled, then it will cause an FIQ to assert

7.1.5.4 VIM Interrupt Vector Table (VIM RAM)

For each VIM interrupt core, there is an associated interrupt vector table (VIM RAM) that is used to store the address of ISRs. During register vectored interrupt and hardware vectored interrupt, VIM accesses the interrupt vector table using the vector value to fetch the address of the corresponding ISR. Note that both interrupt vector tables are identical in their memory organization.

The VIM RAM is basically comprised of a set of interrupt vector registers (INTVECTOR_j). Hence, the interrupt vector table is organized in 256 words of 30 bits, with a base address corresponding to the physical address of the first register in the group.

Note

The lower two bits of the 32-bit interrupt vector are always 0s.

Figure 7-2 shows the VIM RAM interrupt vector map.

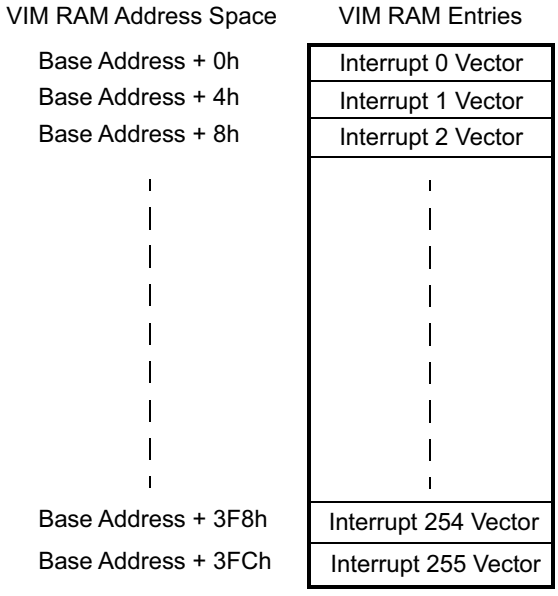

Figure 7-2. VIM RAM Interrupt Vector Map

The interrupt vector table has protection by ECC to indicate corruption due to soft errors. The ECC logic inside VIM supports SECDED. Refer to the ECC aggregator map for the VIM RAM ID.

Copyright © 2025 Texas Instruments Incorporated

7.1.5.5 VIM Interrupt Prioritization

The VIM supports the interruption of the currently active interrupt by one with a higher priority. FIQs and IRQs are completely separate but both use the same mechanism.

When an interrupt goes from pending to active (FIQ: reading the FIQVEC register; IRQ: reading the IRQVEC register, then the interrupt is loaded into the corresponding active register (ACTFIQ / ACTIRQ), and all interrupts of an equal or lesser priority are masked (discarded). If prior to this interrupt being cleared (by writing to theFIQVEC register, or IRQVEC register) another interrupt of higher priority arrives, then the FIQn/IRQn will be asserted and that interrupt made pending as normal. If the CPU switches this interrupt to active (by reading the FIQVEC / IRQVEC register), then the currently active interrupt will be pushed onto a stack. When an interrupt is cleared by reading the FIQVEC / IRQVEC register, if there are any interrupts on the stack, the first entry is popped off and put back into the ACTFIQ / ACTIRQ register, so that software may continue where it left off.

7.1.5.6 VIM ECC Support

The memory that holds the interrupt vector for each interrupt is protected by SECDED ECC. Single-bit errors are corrected and written back. Double-bit errors are not corrected. If a double-bit error occurs while trying to load a vector, then the DEDVEC register is used to provide the default vector for the *coreN_IRQADDRV* signal, the IRQVEC register, and the FIQVEC register. The DEDVEC should point to an ISR that handles the fact that there was an uncorrectable error in the interrupt handling.

Some possible remediating actions would be to:

1. Reconstruct the vector table and re-start the application
   a. Potentially switch to a completely software interrupt handler in the mean time
2. Restart the application from scratch
3. Reset the device
4. Sit in a loop (or WFI) while something external (for example, the ESM) responds to the DED interrupt that will be generated

It is up to the user and the application to determine the appropriate action.

Note

An interrupt that has an uncorrectable vector error (and thus uses the DED vector) will still have the priority of the original interrupt . This makes it possible for a higher priority interrupt to supercede the handling of the error.

Control and reporting are done by the ECC aggregator.

7.1.5.7 VIM Lockstep Mode

In lockstep mode, CPU1 is used as a diagnostic for CPU0. In this mode, only the interrupt inputs for CPU0 are used. Besides to CPU0, these interrupt inputs are also internally routed to CPU1 (through the level-sync / edge-detect logic dedicated to CPU1, and additionally through some delay circuits). The outputs from both VIM interrupt cores are then sent to the MSS CCMR5 module through dedicated compare buses (with CPU0's outputs delayed). The CCMR5 module is responsible for comparing the two sets of output signals and for reporting any mismatches by generating an interrupt (MSS_CCMR5_ERR).

Note

In lockstep mode, only the RAM dedicated to CPU0 is used, so software *must not* do anything with the ECC interface on the RAM dedicated to CPU1.

7.1.5.8 VIM IDLE State

The VIM will indicate IDLE when there are no pending unmasked interrupts or MMR accesses. The VIM does not have a clock stop interface.

Copyright © 2025 Texas Instruments Incorporated

7.1.5.9 VIM Interrupt Handling

There are multiple ways to service an interrupt depending on how much of the hardware assistance offered by the VIM the software wants to take advantage of.

For IRQs, it is recommended to use the procedure in Section 7.1.5.9.1, but the procedures in Section 7.1.5.9.2 or Section 7.1.5.9.3 (if a user wants to implement a fully software prioritization scheme) may be used as alternatives.

For FIQs, it is recommended to use the procedure in Section 7.1.5.9.4, but the procedure in Section 7.1.5.9.5 may be used as an alternative.

Note

These descriptions do not include steps such as stack pushes and state retention that software must take in order to return from the ISR. It is assumed that the programmer is aware of these steps.

7.1.5.9.1 Servicing IRQ Through Vector Interface

If the associated CPU has the vector (VIC) interface enabled, then the following method is used for servicing IRQs:

1. Hardware handshake
   a. CPU asserts *coreN_IRQACK* high
   b. VIM asserts *coreN_IRQADDRV* to indicate that the *coreN_IRQADDR* bus is stable with the correct vector address
   c. CPU reads *coreN_IRQADDR*, jumps to that address, and de-asserts *coreN_IRQACK* low
   d. VIM de-asserts *coreN_IRQn* and *coreN_IRQADDRV*, VIM masks (discards) all IRQs with the same or lower priority
   e. VIM loads the value from the PRIIRQ[9:0] NUM bit field (which corresponds to the vector address) into the ACTIRQ[9:0] NUM bit field, which causes the ACTIRQ[31] VALID bit to be set
2. Service the interrupt
3. Depending on whether the original source of the interrupt was a pulse or a level (determined by reading the ACTIRQ[9:0] NUM bit field to determine number, and reading the appropriate bit in the INTTYPE_j register to determine type)
   a. Pulse
      i. Clear the status by writing a '1' to the appropriate bit in the IRQSTS_j register, or STS_j register
      ii. Clear the interrupt at the source. This way, the source can generate another pulse, if it needs to, and the VIM will process this as a new interrupt
   b. Level
      i. Clear the interrupt at the source
      ii. Clear the status by writing a '1' to the appropriate bit in the IRQSTS_j register, or STS_j register. This way, the level should be gone at the input to the VIM, it will avoid falsely re-calling the interrupt. If the source maintains the level, then it means there is another interrupt
4. Write any value to the IRQVEC register
   a. This will clear the priority mask and will cause all interrupts to be re-evaluated for the new highest priority interrupt
   b. This will also clear the ACTIRQ[31] VALID bit

7.1.5.9.2 Servicing IRQ Through MMR Interface

When an IRQ interrupt is received, the CPU should follow these steps if not using the vector interface:

1. Read the IRQVEC register and jump to that address to service the ISR

Copyright © 2025 Texas Instruments Incorporated

a. Reading this register will mask (discard) all interrupts of an equal or lower priority and de-assert the *coreN_IRQn* output. If another interrupt of a higher priority becomes available, the *coreN_IRQn* will re-assert, allowing priority interruption of an interrupt
b. Reading this register will cause the value from the PRIIRQ[9:0] NUM bit field to be loaded into the ACTIRQ[9:0] NUM bit field, and the ACTIRQ[31] VALID bit to be set

2. Service the interrupt
3. Depending on whether the original source of the interrupt was a pulse or a level
   a. Pulse
      i. Clear the status by writing a '1' to the appropriate bit in the STS_j register, or IRQSTS_j register
      ii. Clear the interrupt at the source
   b. Level
      i. Clear the interrupt at the source
      ii. Clear the status by writing a '1' to the appropriate bit in the STS_j register, or IRQSTS_j register
4. Write any value to the IRQVEC register
   a. This will clear the priority mask and will cause all interrupts to be re-evaluated for the new highest priority interrupt
   b. This will also clear the ACTIRQ[31] VALID bit

7.1.5.9.3 Servicing IRQ Through MMR Interface (Alternative)

If a user does not want to use the IRQVEC register, the VIM may be used as a more traditional interrupt controller. Note that in this mode, there is no hardware priority masking (because the IRQVEC register is never read). Software would be responsible for doing all priority operations.

1. Determine which interrupt to service
   a. Read the PRIIRQ register to determine which interrupt is the highest priority IRQ currently asserted, OR
   b. Optionally read the IRQGSTS register to determine which groups have IRQs pending, then read the IRQSTS_j register and use a software prioritization scheme to determine which IRQ to service
2. Service the interrupt
3. Depending on whether the original source of the interrupt was a pulse or a level
   a. Pulse
      i. Clear the status by writing a '1' to the appropriate bit in the STS_j register, or IRQSTS_j register
      ii. Clear the interrupt at the source.
   b. Level
      i. Clear the interrupt at the source
      ii. Clear the status by writing a '1' to the appropriate bit in the STS_j register, or IRQSTS_j register

7.1.5.9.4 Servicing FIQ

When an FIQ interrupt is received, the CPU should follow these steps:

1. Read the FIQVEC register and jump to that address to service the ISR
   a. Reading this register will mask (discard) all interrupts of an equal or lower priority and de-assert the *coreN_FIQn* output. If another interrupt of a higher priority becomes available, the *coreN_FIQn* will re-assert, allowing priority interruption of an interrupt.
   b. Reading this register will cause the value from the PRIFIQ[9:0] NUM bit field to be loaded into the ACTFIQ[9:0] NUM bit field, and the ACTFIQ[31] VALID bit to be set
2. Service the interrupt
3. Depending on whether the original source of the interrupt was a pulse or a level (determined by reading the ACTFIQ[9:0] NUM bit field to determine number, and reading the appropriate bit in the INTTYPE_j register to determine type)

Copyright © 2025 Texas Instruments Incorporated

a. Pulse
   i. Clear the status by writing a '1' to the appropriate bit in the STS_j register, or FIQSTS_j register
   ii. Clear the interrupt at the source. This way, the source can generate another pulse, if it needs to, and the VIM will process this as a new interrupt

b. Level
   i. Clear the interrupt at the source
   ii. Clear the status by writing a '1' to the appropriate bit in the STS_j register, or FIQSTS_j register. This way, the level should be gone at the input to the VIM, it will avoid falsely re-calling the interrupt. If the source maintains the level, then it means there is another interrupt

4. Write any value to the FIQVEC register
   a. This will clear the priority mask and will cause all interrupts to be re-evaluated for the new highest priority interrupt
   b. This will also clear the ACTFIQ[31] VALID bit

7.1.5.9.5 Servicing FIQ (Alternative)

If a user does not want to use the FIQVEC register, the VIM may be used as a more traditional interrupt controller. Note that in this mode, there is no hardware priority masking (because the FIQVEC register is never read). Software would be responsible for doing all priority operations.

1. Determine which interrupt to service
   a. Read the PRIFIQ register to determine which interrupt is the highest priority FIQ currently asserted, OR
   b. Optionally read the FIQGSTS register to determine which groups have IRQs pending, then read the FIQSTS_j register and use a software prioritization scheme to determine which FIQ to service
2. Service the interrupt
3. Depending on whether the original source of the interrupt was a pulse or a level
   a. Pulse
      i. Clear the status by writing a '1' to the appropriate bit in the STS_j register, or FIQSTS_j register
      ii. Clear the interrupt at the source.
   b. Level
      i. Clear the interrupt at the source
      ii. Clear the status by writing a '1' to the appropriate bit in the STS_j register, or FIQSTS_j register.

7.1.5.10 MSS_VIM Registers

Table 7-3 lists the memory-mapped registers for the MSS_VIM registers. All register offset addresses not listed in Table 7-3 should be considered as reserved locations and the register contents should not be modified.

Table 7-2. VIM Instances

Instance	Base Address
MSS_VIM_R5A	0x02080000
MSS_VIM_R5B	0x020A0000

Table 7-3. MSS_VIM Registers

Offset	Acronym	Register Name	Section
0h	PID	PID	PID Register (Offset = 0h) [Reset = 60900001h]
4h	INFO	INFO	INFO Register (Offset = 4h) [Reset = 100h]

Copyright © 2025 Texas Instruments Incorporated

Table 7-3. MSS_VIM Registers (continued)

Offset	Acronym	Register Name	Section
8h	PRIIRQ	PRIIRQ	PRIIRQ Register (Offset = 8h) [Reset = 0h]
Ch	PRIFIQ	PRIFIQ	PRIFIQ Register (Offset = Ch) [Reset = 0h]
10h	IRQGSTS	IRQGSTS	IRQGSTS Register (Offset = 10h) [Reset = 0h]
14h	FIQGSTS	FIQGSTS	FIQGSTS Register (Offset = 14h) [Reset = 0h]
18h	IRQVEC	IRQVEC	IRQVEC Register (Offset = 18h) [Reset = 0h]
1Ch	FIQVEC	FIQVEC	FIQVEC Register (Offset = 1Ch) [Reset = 0h]
20h	ACTIRQ	ACTIRQ	ACTIRQ Register (Offset = 20h) [Reset = 0h]
24h	ACTFIQ	ACTFIQ	ACTFIQ Register (Offset = 24h) [Reset = 0h]
30h	DEDVEC	DEDVEC	DEDVEC Register (Offset = 30h) [Reset = 0h]
400h	RAW	RAW	RAW Register (Offset = 400h) [Reset = 0h]
404h	STS	STS	STS Register (Offset = 404h) [Reset = 0h]
408h	INTR_EN_SET	INTR_EN_SET	INTR_EN_SET Register (Offset = 408h) [Reset = 0h]
40Ch	INTER_EN_CLR	INTER_EN_CLR	INTER_EN_CLR Register (Offset = 40Ch) [Reset = 0h]
410h	IRQSTS	IRQSTS	IRQSTS Register (Offset = 410h) [Reset = 0h]
414h	FIQSTS	FIQSTS	FIQSTS Register (Offset = 414h) [Reset = 0h]
418h	INTMAP	INTMAP	INTMAP Register (Offset = 418h) [Reset = 0h]
41Ch	INTTYPE	INTTYPE	INTTYPE Register (Offset = 41Ch) [Reset = 0h]
420h	RAW_1	RAW	RAW_1 Register (Offset = 420h) [Reset = 0h]
424h	STS_1	STS	STS_1 Register (Offset = 424h) [Reset = 0h]

Copyright © 2025 Texas Instruments Incorporated

Table 7-3. MSS_VIM Registers (continued)

Offset	Acronym	Register Name	Section
428h	INTR_EN_SET_1	INTR_EN_SET	INTR_EN_SET_1 Register (Offset = 428h) [Reset = 0h]
42Ch	INTER_EN_CLR_1	INTER_EN_CLR	INTER_EN_CLR_1 Register (Offset = 42Ch) [Reset = 0h]
430h	IRQSTS_1	IRQSTS	IRQSTS_1 Register (Offset = 430h) [Reset = 0h]
434h	FIQSTS_1	FIQSTS	FIQSTS_1 Register (Offset = 434h) [Reset = 0h]
438h	INTMAP_1	INTMAP	INTMAP_1 Register (Offset = 438h) [Reset = 0h]
43Ch	INTTYPE_1	INTTYPE	INTTYPE_1 Register (Offset = 43Ch) [Reset = 0h]
440h	RAW_2	RAW	RAW_2 Register (Offset = 440h) [Reset = 0h]
444h	STS_2	STS	STS_2 Register (Offset = 444h) [Reset = 0h]
448h	INTR_EN_SET_2	INTR_EN_SET	INTR_EN_SET_2 Register (Offset = 448h) [Reset = 0h]
44Ch	INTER_EN_CLR_2	INTER_EN_CLR	INTER_EN_CLR_2 Register (Offset = 44Ch) [Reset = 0h]
450h	IRQSTS_2	IRQSTS	IRQSTS_2 Register (Offset = 450h) [Reset = 0h]
454h	FIQSTS_2	FIQSTS	FIQSTS_2 Register (Offset = 454h) [Reset = 0h]
458h	INTMAP_2	INTMAP	INTMAP_2 Register (Offset = 458h) [Reset = 0h]
45Ch	INTTYPE_2	INTTYPE	INTTYPE_2 Register (Offset = 45Ch) [Reset = 0h]
460h	RAW_3	RAW	RAW_3 Register (Offset = 460h) [Reset = 0h]
464h	STS_3	STS	STS_3 Register (Offset = 464h) [Reset = 0h]
468h	INTR_EN_SET_3	INTR_EN_SET	INTR_EN_SET_3 Register (Offset = 468h) [Reset = 0h]
46Ch	INTER_EN_CLR_3	INTER_EN_CLR	INTER_EN_CLR_3 Register (Offset = 46Ch) [Reset = 0h]
470h	IRQSTS_3	IRQSTS	IRQSTS_3 Register (Offset = 470h) [Reset = 0h]

Copyright © 2025 Texas Instruments Incorporated

Table 7-3. MSS_VIM Registers (continued)

Offset	Acronym	Register Name	Section
474h	FIQSTS_3	FIQSTS	FIQSTS_3 Register (Offset = 474h) [Reset = 0h]
478h	INTMAP_3	INTMAP	INTMAP_3 Register (Offset = 478h) [Reset = 0h]
47Ch	INTTYPE_3	INTTYPE	INTTYPE_3 Register (Offset = 47Ch) [Reset = 0h]
480h	RAW_4	RAW	RAW_4 Register (Offset = 480h) [Reset = 0h]
484h	STS_4	STS	STS_4 Register (Offset = 484h) [Reset = 0h]
488h	INTR_EN_SET_4	INTR_EN_SET	INTR_EN_SET_4 Register (Offset = 488h) [Reset = 0h]
48Ch	INTER_EN_CLR_4	INTER_EN_CLR	INTER_EN_CLR_4 Register (Offset = 48Ch) [Reset = 0h]
490h	IRQSTS_4	IRQSTS	IRQSTS_4 Register (Offset = 490h) [Reset = 0h]
494h	FIQSTS_4	FIQSTS	FIQSTS_4 Register (Offset = 494h) [Reset = 0h]
498h	INTMAP_4	INTMAP	INTMAP_4 Register (Offset = 498h) [Reset = 0h]
49Ch	INTTYPE_4	INTTYPE	INTTYPE_4 Register (Offset = 49Ch) [Reset = 0h]
4A0h	RAW_5	RAW	RAW_5 Register (Offset = 4A0h) [Reset = 0h]
4A4h	STS_5	STS	STS_5 Register (Offset = 4A4h) [Reset = 0h]
4A8h	INTR_EN_SET_5	INTR_EN_SET	INTR_EN_SET_5 Register (Offset = 4A8h) [Reset = 0h]
4ACh	INTER_EN_CLR_5	INTER_EN_CLR	INTER_EN_CLR_5 Register (Offset = 4ACh) [Reset = 0h]
4B0h	IRQSTS_5	IRQSTS	IRQSTS_5 Register (Offset = 4B0h) [Reset = 0h]
4B4h	FIQSTS_5	FIQSTS	FIQSTS_5 Register (Offset = 4B4h) [Reset = 0h]
4B8h	INTMAP_5	INTMAP	INTMAP_5 Register (Offset = 4B8h) [Reset = 0h]
4BCh	INTTYPE_5	INTTYPE	INTTYPE_5 Register (Offset = 4BCh) [Reset = 0h]

Copyright © 2025 Texas Instruments Incorporated

Table 7-3. MSS_VIM Registers (continued)

Offset	Acronym	Register Name	Section
4C0h	RAW_6	RAW	RAW_6 Register (Offset = 4C0h) [Reset = 0h]
4C4h	STS_6	STS	STS_6 Register (Offset = 4C4h) [Reset = 0h]
4C8h	INTR_EN_SET_6	INTR_EN_SET	INTR_EN_SET_6 Register (Offset = 4C8h) [Reset = 0h]
4CCh	INTER_EN_CLR_6	INTER_EN_CLR	INTER_EN_CLR_6 Register (Offset = 4CCh) [Reset = 0h]
4D0h	IRQSTS_6	IRQSTS	IRQSTS_6 Register (Offset = 4D0h) [Reset = 0h]
4D4h	FIQSTS_6	FIQSTS	FIQSTS_6 Register (Offset = 4D4h) [Reset = 0h]
4D8h	INTMAP_6	INTMAP	INTMAP_6 Register (Offset = 4D8h) [Reset = 0h]
4DCh	INTTYPE_6	INTTYPE	INTTYPE_6 Register (Offset = 4DCh) [Reset = 0h]
4E0h	RAW_7	RAW	RAW_7 Register (Offset = 4E0h) [Reset = 0h]
4E4h	STS_7	STS	STS_7 Register (Offset = 4E4h) [Reset = 0h]
4E8h	INTR_EN_SET_7	INTR_EN_SET	INTR_EN_SET_7 Register (Offset = 4E8h) [Reset = 0h]
4ECh	INTER_EN_CLR_7	INTER_EN_CLR	INTR_EN_SET_7 Register (Offset = 4E8h) [Reset = 0h]
4F0h	IRQSTS_7	IRQSTS	IRQSTS_7 Register (Offset = 4F0h) [Reset = 0h]
4F4h	FIQSTS_7	FIQSTS	FIQSTS_7 Register (Offset = 4F4h) [Reset = 0h]
4F8h	INTMAP_7	INTMAP	INTMAP_7 Register (Offset = 4F8h) [Reset = 0h]
4FCh	INTTYPE_7	INTTYPE	INTTYPE_7 Register (Offset = 4FCh) [Reset = 0h]
1000h	INTPRIORITY	INTPRIORITY	INTPRIORITY Register (Offset = 1000h) [Reset = Fh]
2000h	INTVECTOR	INTVECTOR	INTVECTOR Register (Offset = X) [Reset = 0h]

Copyright © 2025 Texas Instruments Incorporated

7.1.5.10.1 PID Register (Offset = 0h) [Reset = 60900001h]

PID is shown in Figure 7-3 and described in Table 7-4.

Return to the Summary Table.

The Revision Register contains the major and minor revisions for the module.

Figure 7-3. PID Register

31	30	29	28	27	26	25	24	23	22	21	20	19	18	17	16
SCHEME		BU		FUNC											
R-1h		R-2h		R-90h											
15	14	13	12	11	10	9	8	7	6	5	4	3	2	1	0
RTL					MAJOR			CUSTOM		MINOR					
R-0h					R-0h			R-0h		R-1h					

Table 7-4. PID Register Field Descriptions

Bit	Field	Type	Reset	Description
31-30	SCHEME	R	1h	PID register scheme
29-28	BU	R	2h	Business Unit: 10 = Processors
27-16	FUNC	R	90h	Module ID
15-11	RTL	R	0h	RTL revision. Will vary depending on release.
10-8	MAJOR	R	0h	Major revision
7-6	CUSTOM	R	0h	Custom
5-0	MINOR	R	1h	Minor revision

7.1.5.10.2 INFO Register (Offset = 4h) [Reset = 100h]

INFO is shown in Figure 7-4 and described in Table 7-5.

Return to the Summary Table.

The Info Register gives the configuration Inforrmation of this VIM.

Figure 7-4. INFO Register

31	30	29	28	27	26	25	24	23	22	21	20	19	18	17	16	15	14	13	12	11	10	9	8	7	6	5	4	3	2	1	0
RES1																					INTERRUPTS										
R-0h																					R-100h										

Table 7-5. INFO Register Field Descriptions

Bit	Field	Type	Reset	Description
31-11	RES1	R	0h	RESERVE FIELD
10-0	INTERRUPTS	R	100h	Total number of Interrupts

7.1.5.10.3 PRIIRQ Register (Offset = 8h) [Reset = 0h]

PRIIRQ is shown in Figure 7-5 and described in Table 7-6.

Return to the Summary Table.

The Prioritized IRQ Register shows the number of the highest priority pending IRQ.

Figure 7-5. PRIIRQ Register

31	30	29	28	27	26	25	24

Copyright © 2025 Texas Instruments Incorporated

Figure 7-5. PRIIRQ Register (continued)

31	30	29	28	27	26	25	24
VALID	RES2						
R-0h	R-0h						
23	22	21	20	19	18	17	16
RES2				PRI			
R-0h				R-0h			
15	14	13	12	11	10	9	8
RES3						NUM	
R-0h						R-0h	
7	6	5	4	3	2	1	0
NUM							
R-0h							

Table 7-6. PRIIRQ Register Field Descriptions

Bit	Field	Type	Reset	Description
31	VALID	R	0h	Indicates that the num field is valid.
30-20	RES2	R	0h	RESERVE FIELD
19-16	PRI	R	0h	Priority of the highest priority pending IRQ. valid only if the valid flag is set.
15-10	RES3	R	0h	RESERVE FIELD
9-0	NUM	R	0h	Number of the highest priority pending IRQ. valid only if the valid flag is set.

7.1.5.10.4 PRIFIQ Register (Offset = Ch) [Reset = 0h]

PRIFIQ is shown in Figure 7-6 and described in Table 7-7.

Return to the Summary Table.

The Prioritized FIQ Register shows the number of the highest priority pending FIQ.

Figure 7-6. PRIFIQ Register

31	30	29	28	27	26	25	24
VALID	RES4						
R-0h	R-0h						
23	22	21	20	19	18	17	16
RES4				PRI			
R-0h				R-0h			
15	14	13	12	11	10	9	8
RES5						NUM	
R-0h						R-0h	
7	6	5	4	3	2	1	0
NUM							
R-0h							

Table 7-7. PRIFIQ Register Field Descriptions

Bit	Field	Type	Reset	Description
31	VALID	R	0h	Indicates that the num field is valid.
30-20	RES4	R	0h	RESERVE FIELD

Copyright © 2025 Texas Instruments Incorporated

Table 7-7. PRIFIQ Register Field Descriptions (continued)

Bit	Field	Type	Reset	Description
19-16	PRI	R	0h	Priority of the highest priority pending FIQ. valid only if the valid flag is set.
15-10	RES5	R	0h	RESERVE FIELD
9-0	NUM	R	0h	Number of the highest priority pending FIQ. valid only if the valid flag is set.

7.1.5.10.5 IRQGSTS Register (Offset = 10h) [Reset = 0h]

IRQGSTS is shown in Figure 7-7 and described in Table 7-8.

Return to the Summary Table.

The IRQ Group Status Register indicates which groups have pending IRQ interrupts.

Figure 7-7. IRQGSTS Register

31	30	29	28	27	26	25	24	23	22	21	20	19	18	17	16	15	14	13	12	11	10	9	8	7	6	5	4	3	2	1	0
STS																															
R-0h																															

Table 7-8. IRQGSTS Register Field Descriptions

Bit	Field	Type	Reset	Description
31-0	STS	R	0h	Indicates that the num field is valid.

7.1.5.10.6 FIQGSTS Register (Offset = 14h) [Reset = 0h]

FIQGSTS is shown in Figure 7-8 and described in Table 7-9.

Return to the Summary Table.

The FIQ Group Status Register indicates which groups have pending FIQ interrupts.

Figure 7-8. FIQGSTS Register

31	30	29	28	27	26	25	24	23	22	21	20	19	18	17	16	15	14	13	12	11	10	9	8	7	6	5	4	3	2	1	0
STS																															
R-0h																															

Table 7-9. FIQGSTS Register Field Descriptions

Bit	Field	Type	Reset	Description
31-0	STS	R	0h	Indicates that the num field is valid.

7.1.5.10.7 IRQVEC Register (Offset = 18h) [Reset = 0h]

IRQVEC is shown in Figure 7-9 and described in Table 7-10.

Return to the Summary Table.

The IRQ Vector Address Register contains the 32-bit address of the interrupt vector for the current pendind IRQ.

Figure 7-9. IRQVEC Register

31	30	29	28	27	26	25	24	23	22	21	20	19	18	17	16
ADDR															
R/W-0h															

Copyright © 2025 Texas Instruments Incorporated

Figure 7-9. IRQVEC Register (continued)

15	14	13	12	11	10	9	8	7	6	5	4	3	2	1	0
ADDR														RES21	
R/W-0h														R-0h	

Table 7-10. IRQVEC Register Field Descriptions

Bit	Field	Type	Reset	Description
31-2	ADDR	R/W	0h	Upper 30 bits of the 32-bit vector address. Only valid if the Prioritized IRQ Register valid flag is true.
1-0	RES21	R	0h	RESERVE FIELD

7.1.5.10.8 FIQVEC Register (Offset = 1Ch) [Reset = 0h]

FIQVEC is shown in Figure 7-10 and described in Table 7-11.

Return to the Summary Table.

The FIQ Vector Address Register contains the 32-bit address of the interrupt vector for the current pendind FIQ.

Figure 7-10. FIQVEC Register

31	30	29	28	27	26	25	24	23	22	21	20	19	18	17	16
ADDR															
R/W-0h															
15	14	13	12	11	10	9	8	7	6	5	4	3	2	1	0
ADDR														RES22	
R/W-0h														R-0h	

Table 7-11. FIQVEC Register Field Descriptions

Bit	Field	Type	Reset	Description
31-2	ADDR	R/W	0h	Upper 30 bits of the 32-bit vector address. Only valid if the Prioritized FIQ Register valid flag is true.
1-0	RES22	R	0h	RESERVE FIELD

7.1.5.10.9 ACTIRQ Register (Offset = 20h) [Reset = 0h]

ACTIRQ is shown in Figure 7-11 and described in Table 7-12.

Return to the Summary Table.

The Active IRQ Register shows the number of the currently active IRQ.

Figure 7-11. ACTIRQ Register

31	30	29	28	27	26	25	24
VALID	RES6						
R-0h	R-0h						
23	22	21	20	19	18	17	16
RES6				PRI			
R-0h				R-0h			
15	14	13	12	11	10	9	8
RES7						NUM	
R-0h						R-0h	

Copyright © 2025 Texas Instruments Incorporated

Figure 7-11. ACTIRQ Register (continued)

7	6	5	4	3	2	1	0
NUM							
R-0h							

Table 7-12. ACTIRQ Register Field Descriptions

Bit	Field	Type	Reset	Description
31	VALID	R	0h	Indicates that the num field is valid. Set when the IRQ Vector Address Register is read and cleared whenever the IRQ Vector Address Register is written.
30-20	RES6	R	0h	RESERVE FIELD
19-16	PRI	R	0h	Priority of the highest priority pending IRQ. valid only if the valid flag is set.
15-10	RES7	R	0h	RESERVE FIELD
9-0	NUM	R	0h	Number of the currently active IRQ. Loaded from teh Prioritized IRQ Register whenever the IRQ Vector Address is read. Valid only if the valid flag is set.

7.1.5.10.10 ACTFIQ Register (Offset = 24h) [Reset = 0h]

ACTFIQ is shown in Figure 7-12 and described in Table 7-13.

Return to the Summary Table.

The Active FIQ Register shows the number of the currently active FIQ.

Figure 7-12. ACTFIQ Register

31	30	29	28	27	26	25	24
VALID	RES8						
R-0h	R-0h						
23	22	21	20	19	18	17	16
RES8				PRI			
R-0h				R-0h			
15	14	13	12	11	10	9	8
RES9						NUM	
R-0h						R-0h	
7	6	5	4	3	2	1	0
NUM							
R-0h							

Table 7-13. ACTFIQ Register Field Descriptions

Bit	Field	Type	Reset	Description
31	VALID	R	0h	Indicates that the num field is valid. Set when the FIQ Vector Address Register is read and cleared whenever the FIQ Vector Address Register is written.
30-20	RES8	R	0h	RESERVE FIELD
19-16	PRI	R	0h	Priority of the highest priority pending IRQ. valid only if the valid flag is set.
15-10	RES9	R	0h	RESERVE FIELD

Copyright © 2025 Texas Instruments Incorporated

Table 7-13. ACTFIQ Register Field Descriptions (continued)

Bit	Field	Type	Reset	Description
9-0	NUM	R	0h	Number of the currently active FIQ. Loaded from teh Prioritized FIQ Register whenever the FIQ Vector Address is read. Valid only if the valid flag is set.

7.1.5.10.11 DEDVEC Register (Offset = 30h) [Reset = 0h]

DEDVEC is shown in Figure 7-13 and described in Table 7-14.

Return to the Summary Table.

The DED Vector Address contains a default vector address for when an uncorrectable error is detected for an active IRQ or FIQ.

Figure 7-13. DEDVEC Register

31	30	29	28	27	26	25	24	23	22	21	20	19	18	17	16
ADDR															
R/W-0h															
15	14	13	12	11	10	9	8	7	6	5	4	3	2	1	0
ADDR														RES23	
R/W-0h														R-0h	

Table 7-14. DEDVEC Register Field Descriptions

Bit	Field	Type	Reset	Description
31-2	ADDR	R/W	0h	Upper 30 bits of the 32-bit vector address.
1-0	RES23	R	0h	RESERVE FIELD

7.1.5.10.12 RAW Register (Offset = 400h) [Reset = 0h]

RAW is shown in Figure 7-14 and described in Table 7-15.

Return to the Summary Table.

Group M Interrupt Raw Status/Set Register (M is 0 to 7) h400 + M x h20 + h00

Figure 7-14. RAW Register

31	30	29	28	27	26	25	24	23	22	21	20	19	18	17	16	15	14	13	12	11	10	9	8	7	6	5	4	3	2	1	0
STS																															
R/W-0h																															

Table 7-15. RAW Register Field Descriptions

Bit	Field	Type	Reset	Description
31-0	STS	R/W	0h	This is the raw status of the events in Group M Each bit corresponds to event Q where Q = Mx32+Bit Read 0 Inactive Read 1 Active/ Pending Write 0 No effect Write 1 Set to Interrupt Raw Status

7.1.5.10.13 STS Register (Offset = 404h) [Reset = 0h]

STS is shown in Figure 7-15 and described in Table 7-16.

Return to the Summary Table.

Group M Interrupt Enabled Status/Clear Register (M is 0 to 7) h400 + M x h20 + h04

Copyright © 2025 Texas Instruments Incorporated

Figure 7-15. STS Register

31	30	29	28	27	26	25	24	23	22	21	20	19	18	17	16	15	14	13	12	11	10	9	8	7	6	5	4	3	2	1	0
MASK																															
R/W-0h																															

Table 7-16. STS Register Field Descriptions

Bit	Field	Type	Reset	Description
31-0	MASK	R/W	0h	This is the masked status of the events in Group M Each bit corresponds to event Q where Q = Mx32+Bit Read 0 Inactive or Disabled Read 1 Active/Pending and Enabled Write 0 No effect Write 1 Clear Interrupt Raw Status

7.1.5.10.14 INTR_EN_SET Register (Offset = 408h) [Reset = 0h]

INTR_EN_SET is shown in Figure 7-16 and described in Table 7-17.

Return to the Summary Table.

Group M Interrupt Enabled Set Register (M is 0 to 7) h400 + M x h20 + h08

Figure 7-16. INTR_EN_SET Register

31	30	29	28	27	26	25	24	23	22	21	20	19	18	17	16	15	14	13	12	11	10	9	8	7	6	5	4	3	2	1	0
MASK																															
R/W-0h																															

Table 7-17. INTR_EN_SET Register Field Descriptions

Bit	Field	Type	Reset	Description
31-0	MASK	R/W	0h	This field is used to enable the mask of events in Group M Each bit corresponds to event Q where Q = Mx32+Bit Read 0 Disabled Read 1 Enabled Write 0 No effect Write 1 Set Enable

7.1.5.10.15 INTER_EN_CLR Register (Offset = 40Ch) [Reset = 0h]

INTER_EN_CLR is shown in Figure 7-17 and described in Table 7-18.

Return to the Summary Table.

Group M Interrupt Enabled Clear Register (M is 0 to 7) h400 + M x h20 + h0C

Figure 7-17. INTER_EN_CLR Register

31	30	29	28	27	26	25	24	23	22	21	20	19	18	17	16	15	14	13	12	11	10	9	8	7	6	5	4	3	2	1	0
MASK																															
R/W-0h																															

Table 7-18. INTER_EN_CLR Register Field Descriptions

Bit	Field	Type	Reset	Description
31-0	MASK	R/W	0h	This field is used to disable the mask of events in Group M Each bit corresponds to event Q where Q = Mx32+Bit Read 0 Disabled Read 1 Enabled Write 0 No effect Write 1 Clear Enable

7.1.5.10.16 IRQSTS Register (Offset = 410h) [Reset = 0h]

IRQSTS is shown in Figure 7-18 and described in Table 7-19.

Return to the Summary Table.

Copyright © 2025 Texas Instruments Incorporated

Group M Interrupt IRQ Enabled Status/Clear Register (M is 0 to 7) h400 + M x h20 + h10

Figure 7-18. IRQSTS Register

31	30	29	28	27	26	25	24	23	22	21	20	19	18	17	16	15	14	13	12	11	10	9	8	7	6	5	4	3	2	1	0
MASK																															
R/W-0h																															

Table 7-19. IRQSTS Register Field Descriptions

Bit	Field	Type	Reset	Description
31-0	MASK	R/W	0h	This is the masked status of the events in group M that are mapped to IRQ Each bit corresponds to event Q where Q = Mx32+Bit Read 0 Inactive, Disabled, or not an IRQ Read 1 Active/Pending, Enabled, and IRQ Write 0 No effect Write 1 Clear Interrupt Raw Status (if IRQ)

7.1.5.10.17 FIQSTS Register (Offset = 414h) [Reset = 0h]

FIQSTS is shown in Figure 7-19 and described in Table 7-20.

Return to the Summary Table.

Group M Interrupt FIQ Enabled Status/Clear Register (M is 0 to 7) h400 + M x h20 + h14

Figure 7-19. FIQSTS Register

31	30	29	28	27	26	25	24	23	22	21	20	19	18	17	16	15	14	13	12	11	10	9	8	7	6	5	4	3	2	1	0
MASK																															
R/W-0h																															

Table 7-20. FIQSTS Register Field Descriptions

Bit	Field	Type	Reset	Description
31-0	MASK	R/W	0h	This is the masked status of the events in group M that are mapped to FIQ Each bit corresponds to event Q where Q = Mx32+Bit Read 0 Inactive, Disabled, or not an FIQ Read 1 Active/Pending, Enabled, and FIQ Write 0 No effect Write 1 Clear Interrupt Raw Status (if FIQ)

7.1.5.10.18 INTMAP Register (Offset = 418h) [Reset = 0h]

INTMAP is shown in Figure 7-20 and described in Table 7-21.

Return to the Summary Table.

Group M Interrupt Map Register (M is 0 to 7) h400 + M x h20 + h18

Figure 7-20. INTMAP Register

31	30	29	28	27	26	25	24	23	22	21	20	19	18	17	16	15	14	13	12	11	10	9	8	7	6	5	4	3	2	1	0
MASK																															
R/W-0h																															

Table 7-21. INTMAP Register Field Descriptions

Bit	Field	Type	Reset	Description
31-0	MASK	R/W	0h	This field is used to indicate which interrupt the corresponding event influences (if enabled) for event group M. Each bit corresponds to event Q where Q = Mx32+Bit 0 IRQ Interrupt (default) 1 FIQ Interrupt

Copyright © 2025 Texas Instruments Incorporated

7.1.5.10.19 INTTYPE Register (Offset = 41Ch) [Reset = 0h]

INTTYPE is shown in Figure 7-21 and described in Table 7-22.

Return to the Summary Table.

Group M Type Map Register (M is 0 to 7) h400 + M x h20 + 0x1C

Figure 7-21. INTTYPE Register

31	30	29	28	27	26	25	24	23	22	21	20	19	18	17	16	15	14	13	12	11	10	9	8	7	6	5	4	3	2	1	0
VAL																															
R/W-0h																															

Table 7-22. INTTYPE Register Field Descriptions

Bit	Field	Type	Reset	Description
31-0	VAL	R/W	0h	This field is used to indicate whether the source of an interrupt is a level (default) or a pulse for event group M. This is informational so that an ISR may query this register and know whether it has to clear a pulse event or a level event (see 3.4 Interrupt Handling). The value has no effect on how the VIM hardware functions. The input interrupts are agnostic as to whether they are pulse or level. Each bit corresponds to event Q where Q = Mx32+Bit 0 Level (default) 1 Pulse

7.1.5.10.20 RAW_1 Register (Offset = 420h) [Reset = 0h]

RAW_1 is shown in Figure 7-22 and described in Table 7-23.

Return to the Summary Table.

Group M Interrupt Raw Status/Set Register (M is 0 to 7) h400 + M x h20 + h00

Figure 7-22. RAW_1 Register

31	30	29	28	27	26	25	24	23	22	21	20	19	18	17	16	15	14	13	12	11	10	9	8	7	6	5	4	3	2	1	0
STS																															
R/W-0h																															

Table 7-23. RAW_1 Register Field Descriptions

Bit	Field	Type	Reset	Description
31-0	STS	R/W	0h	This is the raw status of the events in Group M Each bit corresponds to event Q where Q = Mx32+Bit Read 0 Inactive Read 1 Active/ Pending Write 0 No effect Write 1 Set to Interrupt Raw Status

7.1.5.10.21 STS_1 Register (Offset = 424h) [Reset = 0h]

STS_1 is shown in Figure 7-23 and described in Table 7-24.

Return to the Summary Table.

Group M Interrupt Enabled Status/Clear Register (M is 0 to 7) h400 + M x h20 + h04

Figure 7-23. STS_1 Register

31	30	29	28	27	26	25	24	23	22	21	20	19	18	17	16	15	14	13	12	11	10	9	8	7	6	5	4	3	2	1	0
MASK																															
R/W-0h																															

Copyright © 2025 Texas Instruments Incorporated

Table 7-24. STS_1 Register Field Descriptions

Bit	Field	Type	Reset	Description
31-0	MASK	R/W	0h	This is the masked status of the events in Group M Each bit corresponds to event Q where Q = Mx32+Bit Read 0 Inactive or Disabled Read 1 Active/Pending and Enabled Write 0 No effect Write 1 Clear Interrupt Raw Status

7.1.5.10.22 INTR_EN_SET_1 Register (Offset = 428h) [Reset = 0h]

INTR_EN_SET_1 is shown in Figure 7-24 and described in Table 7-25.

Return to the Summary Table.

Group M Interrupt Enabled Set Register (M is 0 to 7) h400 + M x h20 + h08

Figure 7-24. INTR_EN_SET_1 Register

31	30	29	28	27	26	25	24	23	22	21	20	19	18	17	16	15	14	13	12	11	10	9	8	7	6	5	4	3	2	1	0
MASK																															
R/W-0h																															

Table 7-25. INTR_EN_SET_1 Register Field Descriptions

Bit	Field	Type	Reset	Description
31-0	MASK	R/W	0h	This field is used to enable the mask of events in Group M Each bit corresponds to event Q where Q = Mx32+Bit Read 0 Disabled Read 1 Enabled Write 0 No effect Write 1 Set Enable

7.1.5.10.23 INTER_EN_CLR_1 Register (Offset = 42Ch) [Reset = 0h]

INTER_EN_CLR_1 is shown in Figure 7-25 and described in Table 7-26.

Return to the Summary Table.

Group M Interrupt Enabled Clear Register (M is 0 to 7) h400 + M x h20 + h0C

Figure 7-25. INTER_EN_CLR_1 Register

31	30	29	28	27	26	25	24	23	22	21	20	19	18	17	16	15	14	13	12	11	10	9	8	7	6	5	4	3	2	1	0
MASK																															
R/W-0h																															

Table 7-26. INTER_EN_CLR_1 Register Field Descriptions

Bit	Field	Type	Reset	Description
31-0	MASK	R/W	0h	This field is used to disable the mask of events in Group M Each bit corresponds to event Q where Q = Mx32+Bit Read 0 Disabled Read 1 Enabled Write 0 No effect Write 1 Clear Enable

7.1.5.10.24 IRQSTS_1 Register (Offset = 430h) [Reset = 0h]

IRQSTS_1 is shown in Figure 7-26 and described in Table 7-27.

Return to the Summary Table.

Group M Interrupt IRQ Enabled Status/Clear Register (M is 0 to 7) h400 + M x h20 + h10

Figure 7-26. IRQSTS_1 Register

31	30	29	28	27	26	25	24	23	22	21	20	19	18	17	16	15	14	13	12	11	10	9	8	7	6	5	4	3	2	1	0
MASK																															

Copyright © 2025 Texas Instruments Incorporated

Figure 7-26. IRQSTS_1 Register (continued)

R/W-0h

Table 7-27. IRQSTS_1 Register Field Descriptions

Bit	Field	Type	Reset	Description
31-0	MASK	R/W	0h	This is the masked status of the events in group M that are mapped to IRQ Each bit corresponds to event Q where Q = Mx32+Bit Read 0 Inactive, Disabled, or not an IRQ Read 1 Active/Pending, Enabled, and IRQ Write 0 No effect Write 1 Clear Interrupt Raw Status (if IRQ)

7.1.5.10.25 FIQSTS_1 Register (Offset = 434h) [Reset = 0h]

FIQSTS_1 is shown in Figure 7-27 and described in Table 7-28.

Return to the Summary Table.

Group M Interrupt FIQ Enabled Status/Clear Register (M is 0 to 7) h400 + M x h20 + h14

Figure 7-27. FIQSTS_1 Register

31	30	29	28	27	26	25	24	23	22	21	20	19	18	17	16	15	14	13	12	11	10	9	8	7	6	5	4	3	2	1	0
MASK																															
R/W-0h																															

Table 7-28. FIQSTS_1 Register Field Descriptions

Bit	Field	Type	Reset	Description
31-0	MASK	R/W	0h	This is the masked status of the events in group M that are mapped to FIQ Each bit corresponds to event Q where Q = Mx32+Bit Read 0 Inactive, Disabled, or not an FIQ Read 1 Active/Pending, Enabled, and FIQ Write 0 No effect Write 1 Clear Interrupt Raw Status (if FIQ)

7.1.5.10.26 INTMAP_1 Register (Offset = 438h) [Reset = 0h]

INTMAP_1 is shown in Figure 7-28 and described in Table 7-29.

Return to the Summary Table.

Group M Interrupt Map Register (M is 0 to 7) h400 + M x h20 + h18

Figure 7-28. INTMAP_1 Register

31	30	29	28	27	26	25	24	23	22	21	20	19	18	17	16	15	14	13	12	11	10	9	8	7	6	5	4	3	2	1	0
MASK																															
R/W-0h																															

Table 7-29. INTMAP_1 Register Field Descriptions

Bit	Field	Type	Reset	Description
31-0	MASK	R/W	0h	This field is used to indicate which interrupt the corresponding event influences (if enabled) for event group M. Each bit corresponds to event Q where Q = Mx32+Bit 0 IRQ Interrupt (default) 1 FIQ Interrupt

7.1.5.10.27 INTTYPE_1 Register (Offset = 43Ch) [Reset = 0h]

INTTYPE_1 is shown in Figure 7-29 and described in Table 7-30.

Return to the Summary Table.

Group M Type Map Register (M is 0 to 7) h400 + M x h20 + 0x1C

Copyright © 2025 Texas Instruments Incorporated

Figure 7-29. INTTYPE_1 Register

31	30	29	28	27	26	25	24	23	22	21	20	19	18	17	16	15	14	13	12	11	10	9	8	7	6	5	4	3	2	1	0
VAL																															
R/W-0h																															

Table 7-30. INTTYPE_1 Register Field Descriptions

Bit	Field	Type	Reset	Description
31-0	VAL	R/W	0h	This field is used to indicate whether the source of an interrupt is a level (default) or a pulse for event group M. This is informational so that an ISR may query this register and know whether it has to clear a pulse event or a level event (see 3.4 Interrupt Handling). The value has no effect on how the VIM hardware functions. The input interrupts are agnostic as to whether they are pulse or level. Each bit corresponds to event Q where Q = Mx32+Bit 0 Level (default) 1 Pulse

7.1.5.10.28 RAW_2 Register (Offset = 440h) [Reset = 0h]

RAW_2 is shown in Figure 7-30 and described in Table 7-31.

Return to the Summary Table.

Group M Interrupt Raw Status/Set Register (M is 0 to 7) h400 + M x h20 + h00

Figure 7-30. RAW_2 Register

31	30	29	28	27	26	25	24	23	22	21	20	19	18	17	16	15	14	13	12	11	10	9	8	7	6	5	4	3	2	1	0
STS																															
R/W-0h																															

Table 7-31. RAW_2 Register Field Descriptions

Bit	Field	Type	Reset	Description
31-0	STS	R/W	0h	This is the raw status of the events in Group M Each bit corresponds to event Q where Q = Mx32+Bit Read 0 Inactive Read 1 Active/ Pending Write 0 No effect Write 1 Set to Interrupt Raw Status

7.1.5.10.29 STS_2 Register (Offset = 444h) [Reset = 0h]

STS_2 is shown in Figure 7-31 and described in Table 7-32.

Return to the Summary Table.

Group M Interrupt Enabled Status/Clear Register (M is 0 to 7) h400 + M x h20 + h04

Figure 7-31. STS_2 Register

31	30	29	28	27	26	25	24	23	22	21	20	19	18	17	16	15	14	13	12	11	10	9	8	7	6	5	4	3	2	1	0
MASK																															
R/W-0h																															

Table 7-32. STS_2 Register Field Descriptions

Bit	Field	Type	Reset	Description
31-0	MASK	R/W	0h	This is the masked status of the events in Group M Each bit corresponds to event Q where Q = Mx32+Bit Read 0 Inactive or Disabled Read 1 Active/Pending and Enabled Write 0 No effect Write 1 Clear Interrupt Raw Status

Copyright © 2025 Texas Instruments Incorporated

7.1.5.10.30 INTR_EN_SET_2 Register (Offset = 448h) [Reset = 0h]

INTR_EN_SET_2 is shown in Figure 7-32 and described in Table 7-33.

Return to the Summary Table.

Group M Interrupt Enabled Set Register (M is 0 to 7) h400 + M x h20 + h08

Figure 7-32. INTR_EN_SET_2 Register

31	30	29	28	27	26	25	24	23	22	21	20	19	18	17	16	15	14	13	12	11	10	9	8	7	6	5	4	3	2	1	0
MASK																															
R/W-0h																															

Table 7-33. INTR_EN_SET_2 Register Field Descriptions

Bit	Field	Type	Reset	Description
31-0	MASK	R/W	0h	This field is used to enable the mask of events in Group M Each bit corresponds to event Q where Q = Mx32+Bit Read 0 Disabled Read 1 Enabled Write 0 No effect Write 1 Set Enable

7.1.5.10.31 INTER_EN_CLR_2 Register (Offset = 44Ch) [Reset = 0h]

INTER_EN_CLR_2 is shown in Figure 7-33 and described in Table 7-34.

Return to the Summary Table.

Group M Interrupt Enabled Clear Register (M is 0 to 7) h400 + M x h20 + h0C

Figure 7-33. INTER_EN_CLR_2 Register

31	30	29	28	27	26	25	24	23	22	21	20	19	18	17	16	15	14	13	12	11	10	9	8	7	6	5	4	3	2	1	0
MASK																															
R/W-0h																															

Table 7-34. INTER_EN_CLR_2 Register Field Descriptions

Bit	Field	Type	Reset	Description
31-0	MASK	R/W	0h	This field is used to disable the mask of events in Group M Each bit corresponds to event Q where Q = Mx32+Bit Read 0 Disabled Read 1 Enabled Write 0 No effect Write 1 Clear Enable

7.1.5.10.32 IRQSTS_2 Register (Offset = 450h) [Reset = 0h]

IRQSTS_2 is shown in Figure 7-34 and described in Table 7-35.

Return to the Summary Table.

Group M Interrupt IRQ Enabled Status/Clear Register (M is 0 to 7) h400 + M x h20 + h10

Figure 7-34. IRQSTS_2 Register

31	30	29	28	27	26	25	24	23	22	21	20	19	18	17	16	15	14	13	12	11	10	9	8	7	6	5	4	3	2	1	0
MASK																															
R/W-0h																															

Copyright © 2025 Texas Instruments Incorporated

Table 7-35. IRQSTS_2 Register Field Descriptions

Bit	Field	Type	Reset	Description
31-0	MASK	R/W	0h	This is the masked status of the events in group M that are mapped to IRQ Each bit corresponds to event Q where Q = Mx32+Bit Read 0 Inactive, Disabled, or not an IRQ Read 1 Active/Pending, Enabled, and IRQ Write 0 No effect Write 1 Clear Interrupt Raw Status (if IRQ)

7.1.5.10.33 FIQSTS_2 Register (Offset = 454h) [Reset = 0h]

FIQSTS_2 is shown in Figure 7-35 and described in Table 7-36.

Return to the Summary Table.

Group M Interrupt FIQ Enabled Status/Clear Register (M is 0 to 7) h400 + M x h20 + h14

Figure 7-35. FIQSTS_2 Register

31	30	29	28	27	26	25	24	23	22	21	20	19	18	17	16	15	14	13	12	11	10	9	8	7	6	5	4	3	2	1	0
MASK																															
R/W-0h																															

Table 7-36. FIQSTS_2 Register Field Descriptions

Bit	Field	Type	Reset	Description
31-0	MASK	R/W	0h	This is the masked status of the events in group M that are mapped to FIQ Each bit corresponds to event Q where Q = Mx32+Bit Read 0 Inactive, Disabled, or not an FIQ Read 1 Active/Pending, Enabled, and FIQ Write 0 No effect Write 1 Clear Interrupt Raw Status (if FIQ)

7.1.5.10.34 INTMAP_2 Register (Offset = 458h) [Reset = 0h]

INTMAP_2 is shown in Figure 7-36 and described in Table 7-37.

Return to the Summary Table.

Group M Interrupt Map Register (M is 0 to 7) h400 + M x h20 + h18

Figure 7-36. INTMAP_2 Register

31	30	29	28	27	26	25	24	23	22	21	20	19	18	17	16	15	14	13	12	11	10	9	8	7	6	5	4	3	2	1	0
MASK																															
R/W-0h																															

Table 7-37. INTMAP_2 Register Field Descriptions

Bit	Field	Type	Reset	Description
31-0	MASK	R/W	0h	This field is used to indicate which interrupt the corresponding event influences (if enabled) for event group M. Each bit corresponds to event Q where Q = Mx32+Bit 0 IRQ Interrupt (default) 1 FIQ Interrupt

7.1.5.10.35 INTTYPE_2 Register (Offset = 45Ch) [Reset = 0h]

INTTYPE_2 is shown in Figure 7-37 and described in Table 7-38.

Return to the Summary Table.

Group M Type Map Register (M is 0 to 7) h400 + M x h20 + 0x1C

Figure 7-37. INTTYPE_2 Register

31	30	29	28	27	26	25	24	23	22	21	20	19	18	17	16	15	14	13	12	11	10	9	8	7	6	5	4	3	2	1	0
VAL																															

Copyright © 2025 Texas Instruments Incorporated

Figure 7-37. INTTYPE_2 Register (continued)

R/W-0h

Table 7-38. INTTYPE_2 Register Field Descriptions

Bit	Field	Type	Reset	Description
31-0	VAL	R/W	0h	This field is used to indicate whether the source of an interrupt is a level (default) or a pulse for event group M. This is informational so that an ISR may query this register and know whether it has to clear a pulse event or a level event (see 3.4 Interrupt Handling). The value has no effect on how the VIM hardware functions. The input interrupts are agnostic as to whether they are pulse or level. Each bit corresponds to event Q where Q = Mx32+Bit 0 Level (default) 1 Pulse

7.1.5.10.36 RAW_3 Register (Offset = 460h) [Reset = 0h]

RAW_3 is shown in Figure 7-38 and described in Table 7-39.

Return to the Summary Table.

Group M Interrupt Raw Status/Set Register (M is 0 to 7) h400 + M x h20 + h00

Figure 7-38. RAW_3 Register

31	30	29	28	27	26	25	24	23	22	21	20	19	18	17	16	15	14	13	12	11	10	9	8	7	6	5	4	3	2	1	0
STS																															
R/W-0h																															

Table 7-39. RAW_3 Register Field Descriptions

Bit	Field	Type	Reset	Description
31-0	STS	R/W	0h	This is the raw status of the events in Group M Each bit corresponds to event Q where Q = Mx32+Bit Read 0 Inactive Read 1 Active/ Pending Write 0 No effect Write 1 Set to Interrupt Raw Status

7.1.5.10.37 STS_3 Register (Offset = 464h) [Reset = 0h]

STS_3 is shown in Figure 7-39 and described in Table 7-40.

Return to the Summary Table.

Group M Interrupt Enabled Status/Clear Register (M is 0 to 7) h400 + M x h20 + h04

Figure 7-39. STS_3 Register

31	30	29	28	27	26	25	24	23	22	21	20	19	18	17	16	15	14	13	12	11	10	9	8	7	6	5	4	3	2	1	0
MASK																															
R/W-0h																															

Table 7-40. STS_3 Register Field Descriptions

Bit	Field	Type	Reset	Description
31-0	MASK	R/W	0h	This is the masked status of the events in Group M Each bit corresponds to event Q where Q = Mx32+Bit Read 0 Inactive or Disabled Read 1 Active/Pending and Enabled Write 0 No effect Write 1 Clear Interrupt Raw Status

Copyright © 2025 Texas Instruments Incorporated

7.1.5.10.38 INTR_EN_SET_3 Register (Offset = 468h) [Reset = 0h]

INTR_EN_SET_3 is shown in Figure 7-40 and described in Table 7-41.

Return to the Summary Table.

Group M Interrupt Enabled Set Register (M is 0 to 7) h400 + M x h20 + h08

Figure 7-40. INTR_EN_SET_3 Register

31	30	29	28	27	26	25	24	23	22	21	20	19	18	17	16	15	14	13	12	11	10	9	8	7	6	5	4	3	2	1	0
MASK																															
R/W-0h																															

Table 7-41. INTR_EN_SET_3 Register Field Descriptions

Bit	Field	Type	Reset	Description
31-0	MASK	R/W	0h	This field is used to enable the mask of events in Group M Each bit corresponds to event Q where Q = Mx32+Bit Read 0 Disabled Read 1 Enabled Write 0 No effect Write 1 Set Enable

7.1.5.10.39 INTER_EN_CLR_3 Register (Offset = 46Ch) [Reset = 0h]

INTER_EN_CLR_3 is shown in Figure 7-41 and described in Table 7-42.

Return to the Summary Table.

Group M Interrupt Enabled Clear Register (M is 0 to 7) h400 + M x h20 + h0C

Figure 7-41. INTER_EN_CLR_3 Register

31	30	29	28	27	26	25	24	23	22	21	20	19	18	17	16	15	14	13	12	11	10	9	8	7	6	5	4	3	2	1	0
MASK																															
R/W-0h																															

Table 7-42. INTER_EN_CLR_3 Register Field Descriptions

Bit	Field	Type	Reset	Description
31-0	MASK	R/W	0h	This field is used to disable the mask of events in Group M Each bit corresponds to event Q where Q = Mx32+Bit Read 0 Disabled Read 1 Enabled Write 0 No effect Write 1 Clear Enable

7.1.5.10.40 IRQSTS_3 Register (Offset = 470h) [Reset = 0h]

IRQSTS_3 is shown in Figure 7-42 and described in Table 7-43.

Return to the Summary Table.

Group M Interrupt IRQ Enabled Status/Clear Register (M is 0 to 7) h400 + M x h20 + h10

Figure 7-42. IRQSTS_3 Register

31	30	29	28	27	26	25	24	23	22	21	20	19	18	17	16	15	14	13	12	11	10	9	8	7	6	5	4	3	2	1	0
MASK																															
R/W-0h																															

Copyright © 2025 Texas Instruments Incorporated

Table 7-43. IRQSTS_3 Register Field Descriptions

Bit	Field	Type	Reset	Description
31-0	MASK	R/W	0h	This is the masked status of the events in group M that are mapped to IRQ Each bit corresponds to event Q where Q = Mx32+Bit Read 0 Inactive, Disabled, or not an IRQ Read 1 Active/Pending, Enabled, and IRQ Write 0 No effect Write 1 Clear Interrupt Raw Status (if IRQ)

7.1.5.10.41 FIQSTS_3 Register (Offset = 474h) [Reset = 0h]

FIQSTS_3 is shown in Figure 7-43 and described in Table 7-44.

Return to the Summary Table.

Group M Interrupt FIQ Enabled Status/Clear Register (M is 0 to 7) h400 + M x h20 + h14

Figure 7-43. FIQSTS_3 Register

31	30	29	28	27	26	25	24	23	22	21	20	19	18	17	16	15	14	13	12	11	10	9	8	7	6	5	4	3	2	1	0
MASK																															
R/W-0h																															

Table 7-44. FIQSTS_3 Register Field Descriptions

Bit	Field	Type	Reset	Description
31-0	MASK	R/W	0h	This is the masked status of the events in group M that are mapped to FIQ Each bit corresponds to event Q where Q = Mx32+Bit Read 0 Inactive, Disabled, or not an FIQ Read 1 Active/Pending, Enabled, and FIQ Write 0 No effect Write 1 Clear Interrupt Raw Status (if FIQ)

7.1.5.10.42 INTMAP_3 Register (Offset = 478h) [Reset = 0h]

INTMAP_3 is shown in Figure 7-44 and described in Table 7-45.

Return to the Summary Table.

Group M Interrupt Map Register (M is 0 to 7) h400 + M x h20 + h18

Figure 7-44. INTMAP_3 Register

31	30	29	28	27	26	25	24	23	22	21	20	19	18	17	16	15	14	13	12	11	10	9	8	7	6	5	4	3	2	1	0
MASK																															
R/W-0h																															

Table 7-45. INTMAP_3 Register Field Descriptions

Bit	Field	Type	Reset	Description
31-0	MASK	R/W	0h	This field is used to indicate which interrupt the corresponding event influences (if enabled) for event group M. Each bit corresponds to event Q where Q = Mx32+Bit 0 IRQ Interrupt (default) 1 FIQ Interrupt

7.1.5.10.43 INTTYPE_3 Register (Offset = 47Ch) [Reset = 0h]

INTTYPE_3 is shown in Figure 7-45 and described in Table 7-46.

Return to the Summary Table.

Group M Type Map Register (M is 0 to 7) h400 + M x h20 + 0x1C

Figure 7-45. INTTYPE_3 Register

31	30	29	28	27	26	25	24	23	22	21	20	19	18	17	16	15	14	13	12	11	10	9	8	7	6	5	4	3	2	1	0
VAL																															

Copyright © 2025 Texas Instruments Incorporated

Figure 7-45. INTTYPE_3 Register (continued)

R/W-0h

Table 7-46. INTTYPE_3 Register Field Descriptions

Bit	Field	Type	Reset	Description
31-0	VAL	R/W	0h	This field is used to indicate whether the source of an interrupt is a level (default) or a pulse for event group M. This is informational so that an ISR may query this register and know whether it has to clear a pulse event or a level event (see 3.4 Interrupt Handling). The value has no effect on how the VIM hardware functions. The input interrupts are agnostic as to whether they are pulse or level. Each bit corresponds to event Q where Q = Mx32+Bit 0 Level (default) 1 Pulse

7.1.5.10.44 RAW_4 Register (Offset = 480h) [Reset = 0h]

RAW_4 is shown in Figure 7-46 and described in Table 7-47.

Return to the Summary Table.

Group M Interrupt Raw Status/Set Register (M is 0 to 7) h400 + M x h20 + h00

Figure 7-46. RAW_4 Register

31	30	29	28	27	26	25	24	23	22	21	20	19	18	17	16	15	14	13	12	11	10	9	8	7	6	5	4	3	2	1	0
STS																															
R/W-0h																															

Table 7-47. RAW_4 Register Field Descriptions

Bit	Field	Type	Reset	Description
31-0	STS	R/W	0h	This is the raw status of the events in Group M Each bit corresponds to event Q where Q = Mx32+Bit Read 0 Inactive Read 1 Active/ Pending Write 0 No effect Write 1 Set to Interrupt Raw Status

7.1.5.10.45 STS_4 Register (Offset = 484h) [Reset = 0h]

STS_4 is shown in Figure 7-47 and described in Table 7-48.

Return to the Summary Table.

Group M Interrupt Enabled Status/Clear Register (M is 0 to 7) h400 + M x h20 + h04

Figure 7-47. STS_4 Register

31	30	29	28	27	26	25	24	23	22	21	20	19	18	17	16	15	14	13	12	11	10	9	8	7	6	5	4	3	2	1	0
MASK																															
R/W-0h																															

Table 7-48. STS_4 Register Field Descriptions

Bit	Field	Type	Reset	Description
31-0	MASK	R/W	0h	This is the masked status of the events in Group M Each bit corresponds to event Q where Q = Mx32+Bit Read 0 Inactive or Disabled Read 1 Active/Pending and Enabled Write 0 No effect Write 1 Clear Interrupt Raw Status

Copyright © 2025 Texas Instruments Incorporated

7.1.5.10.46 INTR_EN_SET_4 Register (Offset = 488h) [Reset = 0h]

INTR_EN_SET_4 is shown in Figure 7-48 and described in Table 7-49.

Return to the Summary Table.

Group M Interrupt Enabled Set Register (M is 0 to 7) h400 + M x h20 + h08

Figure 7-48. INTR_EN_SET_4 Register

31	30	29	28	27	26	25	24	23	22	21	20	19	18	17	16	15	14	13	12	11	10	9	8	7	6	5	4	3	2	1	0
MASK																															
R/W-0h																															

Table 7-49. INTR_EN_SET_4 Register Field Descriptions

Bit	Field	Type	Reset	Description
31-0	MASK	R/W	0h	This field is used to enable the mask of events in Group M Each bit corresponds to event Q where Q = Mx32+Bit Read 0 Disabled Read 1 Enabled Write 0 No effect Write 1 Set Enable

7.1.5.10.47 INTER_EN_CLR_4 Register (Offset = 48Ch) [Reset = 0h]

INTER_EN_CLR_4 is shown in Figure 7-49 and described in Table 7-50.

Return to the Summary Table.

Group M Interrupt Enabled Clear Register (M is 0 to 7) h400 + M x h20 + h0C

Figure 7-49. INTER_EN_CLR_4 Register

31	30	29	28	27	26	25	24	23	22	21	20	19	18	17	16	15	14	13	12	11	10	9	8	7	6	5	4	3	2	1	0
MASK																															
R/W-0h																															

Table 7-50. INTER_EN_CLR_4 Register Field Descriptions

Bit	Field	Type	Reset	Description
31-0	MASK	R/W	0h	This field is used to disable the mask of events in Group M Each bit corresponds to event Q where Q = Mx32+Bit Read 0 Disabled Read 1 Enabled Write 0 No effect Write 1 Clear Enable

7.1.5.10.48 IRQSTS_4 Register (Offset = 490h) [Reset = 0h]

IRQSTS_4 is shown in Figure 7-50 and described in Table 7-51.

Return to the Summary Table.

Group M Interrupt IRQ Enabled Status/Clear Register (M is 0 to 7) h400 + M x h20 + h10

Figure 7-50. IRQSTS_4 Register

31	30	29	28	27	26	25	24	23	22	21	20	19	18	17	16	15	14	13	12	11	10	9	8	7	6	5	4	3	2	1	0
MASK																															
R/W-0h																															

Copyright © 2025 Texas Instruments Incorporated

Table 7-51. IRQSTS_4 Register Field Descriptions

Bit	Field	Type	Reset	Description
31-0	MASK	R/W	0h	This is the masked status of the events in group M that are mapped to IRQ Each bit corresponds to event Q where Q = Mx32+Bit Read 0 Inactive, Disabled, or not an IRQ Read 1 Active/Pending, Enabled, and IRQ Write 0 No effect Write 1 Clear Interrupt Raw Status (if IRQ)

7.1.5.10.49 FIQSTS_4 Register (Offset = 494h) [Reset = 0h]

FIQSTS_4 is shown in Figure 7-51 and described in Table 7-52.

Return to the Summary Table.

Group M Interrupt FIQ Enabled Status/Clear Register (M is 0 to 7) h400 + M x h20 + h14

Figure 7-51. FIQSTS_4 Register

31	30	29	28	27	26	25	24	23	22	21	20	19	18	17	16	15	14	13	12	11	10	9	8	7	6	5	4	3	2	1	0
MASK																															
R/W-0h																															

Table 7-52. FIQSTS_4 Register Field Descriptions

Bit	Field	Type	Reset	Description
31-0	MASK	R/W	0h	This is the masked status of the events in group M that are mapped to FIQ Each bit corresponds to event Q where Q = Mx32+Bit Read 0 Inactive, Disabled, or not an FIQ Read 1 Active/Pending, Enabled, and FIQ Write 0 No effect Write 1 Clear Interrupt Raw Status (if FIQ)

7.1.5.10.50 INTMAP_4 Register (Offset = 498h) [Reset = 0h]

INTMAP_4 is shown in Figure 7-52 and described in Table 7-53.

Return to the Summary Table.

Group M Interrupt Map Register (M is 0 to 7) h400 + M x h20 + h18

Figure 7-52. INTMAP_4 Register

31	30	29	28	27	26	25	24	23	22	21	20	19	18	17	16	15	14	13	12	11	10	9	8	7	6	5	4	3	2	1	0
MASK																															
R/W-0h																															

Table 7-53. INTMAP_4 Register Field Descriptions

Bit	Field	Type	Reset	Description
31-0	MASK	R/W	0h	This field is used to indicate which interrupt the corresponding event influences (if enabled) for event group M. Each bit corresponds to event Q where Q = Mx32+Bit 0 IRQ Interrupt (default) 1 FIQ Interrupt

7.1.5.10.51 INTTYPE_4 Register (Offset = 49Ch) [Reset = 0h]

INTTYPE_4 is shown in Figure 7-53 and described in Table 7-54.

Return to the Summary Table.

Group M Type Map Register (M is 0 to 7) h400 + M x h20 + 0x1C

Figure 7-53. INTTYPE_4 Register

31	30	29	28	27	26	25	24	23	22	21	20	19	18	17	16	15	14	13	12	11	10	9	8	7	6	5	4	3	2	1	0
VAL																															

Copyright © 2025 Texas Instruments Incorporated

Figure 7-53. INTTYPE_4 Register (continued)

R/W-0h

Table 7-54. INTTYPE_4 Register Field Descriptions

Bit	Field	Type	Reset	Description
31-0	VAL	R/W	0h	This field is used to indicate whether the source of an interrupt is a level (default) or a pulse for event group M. This is informational so that an ISR may query this register and know whether it has to clear a pulse event or a level event (see 3.4 Interrupt Handling). The value has no effect on how the VIM hardware functions. The input interrupts are agnostic as to whether they are pulse or level. Each bit corresponds to event Q where Q = Mx32+Bit 0 Level (default) 1 Pulse

7.1.5.10.52 RAW_5 Register (Offset = 4A0h) [Reset = 0h]

RAW_5 is shown in Figure 7-54 and described in Table 7-55.

Return to the Summary Table.

Group M Interrupt Raw Status/Set Register (M is 0 to 7) h400 + M x h20 + h00

Figure 7-54. RAW_5 Register

31	30	29	28	27	26	25	24	23	22	21	20	19	18	17	16	15	14	13	12	11	10	9	8	7	6	5	4	3	2	1	0
STS																															
R/W-0h																															

Table 7-55. RAW_5 Register Field Descriptions

Bit	Field	Type	Reset	Description
31-0	STS	R/W	0h	This is the raw status of the events in Group M Each bit corresponds to event Q where Q = Mx32+Bit Read 0 Inactive Read 1 Active/ Pending Write 0 No effect Write 1 Set to Interrupt Raw Status

7.1.5.10.53 STS_5 Register (Offset = 4A4h) [Reset = 0h]

STS_5 is shown in Figure 7-55 and described in Table 7-56.

Return to the Summary Table.

Group M Interrupt Enabled Status/Clear Register (M is 0 to 7) h400 + M x h20 + h04

Figure 7-55. STS_5 Register

31	30	29	28	27	26	25	24	23	22	21	20	19	18	17	16	15	14	13	12	11	10	9	8	7	6	5	4	3	2	1	0
MASK																															
R/W-0h																															

Table 7-56. STS_5 Register Field Descriptions

Bit	Field	Type	Reset	Description
31-0	MASK	R/W	0h	This is the masked status of the events in Group M Each bit corresponds to event Q where Q = Mx32+Bit Read 0 Inactive or Disabled Read 1 Active/Pending and Enabled Write 0 No effect Write 1 Clear Interrupt Raw Status

Copyright © 2025 Texas Instruments Incorporated

7.1.5.10.54 INTR_EN_SET_5 Register (Offset = 4A8h) [Reset = 0h]

INTR_EN_SET_5 is shown in Figure 7-56 and described in Table 7-57.

Return to the Summary Table.

Group M Interrupt Enabled Set Register (M is 0 to 7) h400 + M x h20 + h08

Figure 7-56. INTR_EN_SET_5 Register

31	30	29	28	27	26	25	24	23	22	21	20	19	18	17	16	15	14	13	12	11	10	9	8	7	6	5	4	3	2	1	0
MASK																															
R/W-0h																															

Table 7-57. INTR_EN_SET_5 Register Field Descriptions

Bit	Field	Type	Reset	Description
31-0	MASK	R/W	0h	This field is used to enable the mask of events in Group M Each bit corresponds to event Q where Q = Mx32+Bit Read 0 Disabled Read 1 Enabled Write 0 No effect Write 1 Set Enable

7.1.5.10.55 INTER_EN_CLR_5 Register (Offset = 4ACh) [Reset = 0h]

INTER_EN_CLR_5 is shown in Figure 7-57 and described in Table 7-58.

Return to the Summary Table.

Group M Interrupt Enabled Clear Register (M is 0 to 7) h400 + M x h20 + h0C

Figure 7-57. INTER_EN_CLR_5 Register

31	30	29	28	27	26	25	24	23	22	21	20	19	18	17	16	15	14	13	12	11	10	9	8	7	6	5	4	3	2	1	0
MASK																															
R/W-0h																															

Table 7-58. INTER_EN_CLR_5 Register Field Descriptions

Bit	Field	Type	Reset	Description
31-0	MASK	R/W	0h	This field is used to disable the mask of events in Group M Each bit corresponds to event Q where Q = Mx32+Bit Read 0 Disabled Read 1 Enabled Write 0 No effect Write 1 Clear Enable

7.1.5.10.56 IRQSTS_5 Register (Offset = 4B0h) [Reset = 0h]

IRQSTS_5 is shown in Figure 7-58 and described in Table 7-59.

Return to the Summary Table.

Group M Interrupt IRQ Enabled Status/Clear Register (M is 0 to 7) h400 + M x h20 + h10

Figure 7-58. IRQSTS_5 Register

31	30	29	28	27	26	25	24	23	22	21	20	19	18	17	16	15	14	13	12	11	10	9	8	7	6	5	4	3	2	1	0
MASK																															
R/W-0h																															

Copyright © 2025 Texas Instruments Incorporated

Table 7-59. IRQSTS_5 Register Field Descriptions

Bit	Field	Type	Reset	Description
31-0	MASK	R/W	0h	This is the masked status of the events in group M that are mapped to IRQ Each bit corresponds to event Q where Q = Mx32+Bit Read 0 Inactive, Disabled, or not an IRQ Read 1 Active/Pending, Enabled, and IRQ Write 0 No effect Write 1 Clear Interrupt Raw Status (if IRQ)

7.1.5.10.57 FIQSTS_5 Register (Offset = 4B4h) [Reset = 0h]

FIQSTS_5 is shown in Figure 7-59 and described in Table 7-60.

Return to the Summary Table.

Group M Interrupt FIQ Enabled Status/Clear Register (M is 0 to 7) h400 + M x h20 + h14

Figure 7-59. FIQSTS_5 Register

31	30	29	28	27	26	25	24	23	22	21	20	19	18	17	16	15	14	13	12	11	10	9	8	7	6	5	4	3	2	1	0
MASK																															
R/W-0h																															

Table 7-60. FIQSTS_5 Register Field Descriptions

Bit	Field	Type	Reset	Description
31-0	MASK	R/W	0h	This is the masked status of the events in group M that are mapped to FIQ Each bit corresponds to event Q where Q = Mx32+Bit Read 0 Inactive, Disabled, or not an FIQ Read 1 Active/Pending, Enabled, and FIQ Write 0 No effect Write 1 Clear Interrupt Raw Status (if FIQ)

7.1.5.10.58 INTMAP_5 Register (Offset = 4B8h) [Reset = 0h]

INTMAP_5 is shown in Figure 7-60 and described in Table 7-61.

Return to the Summary Table.

Group M Interrupt Map Register (M is 0 to 7) h400 + M x h20 + h18

Figure 7-60. INTMAP_5 Register

31	30	29	28	27	26	25	24	23	22	21	20	19	18	17	16	15	14	13	12	11	10	9	8	7	6	5	4	3	2	1	0
MASK																															
R/W-0h																															

Table 7-61. INTMAP_5 Register Field Descriptions

Bit	Field	Type	Reset	Description
31-0	MASK	R/W	0h	This field is used to indicate which interrupt the corresponding event influences (if enabled) for event group M. Each bit corresponds to event Q where Q = Mx32+Bit 0 IRQ Interrupt (default) 1 FIQ Interrupt

7.1.5.10.59 INTTYPE_5 Register (Offset = 4BCh) [Reset = 0h]

INTTYPE_5 is shown in Figure 7-61 and described in Table 7-62.

Return to the Summary Table.

Group M Type Map Register (M is 0 to 7) h400 + M x h20 + 0x1C

Figure 7-61. INTTYPE_5 Register

31	30	29	28	27	26	25	24	23	22	21	20	19	18	17	16	15	14	13	12	11	10	9	8	7	6	5	4	3	2	1	0
VAL																															

Copyright © 2025 Texas Instruments Incorporated

Figure 7-61. INTTYPE_5 Register (continued)

R/W-0h

Table 7-62. INTTYPE_5 Register Field Descriptions

Bit	Field	Type	Reset	Description
31-0	VAL	R/W	0h	This field is used to indicate whether the source of an interrupt is a level (default) or a pulse for event group M. This is informational so that an ISR may query this register and know whether it has to clear a pulse event or a level event (see 3.4 Interrupt Handling). The value has no effect on how the VIM hardware functions. The input interrupts are agnostic as to whether they are pulse or level. Each bit corresponds to event Q where Q = Mx32+Bit 0 Level (default) 1 Pulse

7.1.5.10.60 RAW_6 Register (Offset = 4C0h) [Reset = 0h]

RAW_6 is shown in Figure 7-62 and described in Table 7-63.

Return to the Summary Table.

Group M Interrupt Raw Status/Set Register (M is 0 to 7) h400 + M x h20 + h00

Figure 7-62. RAW_6 Register

31	30	29	28	27	26	25	24	23	22	21	20	19	18	17	16	15	14	13	12	11	10	9	8	7	6	5	4	3	2	1	0
STS																															
R/W-0h																															

Table 7-63. RAW_6 Register Field Descriptions

Bit	Field	Type	Reset	Description
31-0	STS	R/W	0h	This is the raw status of the events in Group M Each bit corresponds to event Q where Q = Mx32+Bit Read 0 Inactive Read 1 Active/ Pending Write 0 No effect Write 1 Set to Interrupt Raw Status

7.1.5.10.61 STS_6 Register (Offset = 4C4h) [Reset = 0h]

STS_6 is shown in Figure 7-63 and described in Table 7-64.

Return to the Summary Table.

Group M Interrupt Enabled Status/Clear Register (M is 0 to 7) h400 + M x h20 + h04

Figure 7-63. STS_6 Register

31	30	29	28	27	26	25	24	23	22	21	20	19	18	17	16	15	14	13	12	11	10	9	8	7	6	5	4	3	2	1	0
MASK																															
R/W-0h																															

Table 7-64. STS_6 Register Field Descriptions

Bit	Field	Type	Reset	Description
31-0	MASK	R/W	0h	This is the masked status of the events in Group M Each bit corresponds to event Q where Q = Mx32+Bit Read 0 Inactive or Disabled Read 1 Active/Pending and Enabled Write 0 No effect Write 1 Clear Interrupt Raw Status

Copyright © 2025 Texas Instruments Incorporated

7.1.5.10.62 INTR_EN_SET_6 Register (Offset = 4C8h) [Reset = 0h]

INTR_EN_SET_6 is shown in Figure 7-64 and described in Table 7-65.

Return to the Summary Table.

Group M Interrupt Enabled Set Register (M is 0 to 7) h400 + M x h20 + h08

Figure 7-64. INTR_EN_SET_6 Register

31	30	29	28	27	26	25	24	23	22	21	20	19	18	17	16	15	14	13	12	11	10	9	8	7	6	5	4	3	2	1	0
MASK																															
R/W-0h																															

Table 7-65. INTR_EN_SET_6 Register Field Descriptions

Bit	Field	Type	Reset	Description
31-0	MASK	R/W	0h	This field is used to enable the mask of events in Group M Each bit corresponds to event Q where Q = Mx32+Bit Read 0 Disabled Read 1 Enabled Write 0 No effect Write 1 Set Enable

7.1.5.10.63 INTER_EN_CLR_6 Register (Offset = 4CCh) [Reset = 0h]

INTER_EN_CLR_6 is shown in Figure 7-65 and described in Table 7-66.

Return to the Summary Table.

Group M Interrupt Enabled Clear Register (M is 0 to 7) h400 + M x h20 + h0C

Figure 7-65. INTER_EN_CLR_6 Register

31	30	29	28	27	26	25	24	23	22	21	20	19	18	17	16	15	14	13	12	11	10	9	8	7	6	5	4	3	2	1	0
MASK																															
R/W-0h																															

Table 7-66. INTER_EN_CLR_6 Register Field Descriptions

Bit	Field	Type	Reset	Description
31-0	MASK	R/W	0h	This field is used to disable the mask of events in Group M Each bit corresponds to event Q where Q = Mx32+Bit Read 0 Disabled Read 1 Enabled Write 0 No effect Write 1 Clear Enable

7.1.5.10.64 IRQSTS_6 Register (Offset = 4D0h) [Reset = 0h]

IRQSTS_6 is shown in Figure 7-66 and described in Table 7-67.

Return to the Summary Table.

Group M Interrupt IRQ Enabled Status/Clear Register (M is 0 to 7) h400 + M x h20 + h10

Figure 7-66. IRQSTS_6 Register

31	30	29	28	27	26	25	24	23	22	21	20	19	18	17	16	15	14	13	12	11	10	9	8	7	6	5	4	3	2	1	0
MASK																															
R/W-0h																															

Copyright © 2025 Texas Instruments Incorporated

Table 7-67. IRQSTS_6 Register Field Descriptions

Bit	Field	Type	Reset	Description
31-0	MASK	R/W	0h	This is the masked status of the events in group M that are mapped to IRQ Each bit corresponds to event Q where Q = Mx32+Bit Read 0 Inactive, Disabled, or not an IRQ Read 1 Active/Pending, Enabled, and IRQ Write 0 No effect Write 1 Clear Interrupt Raw Status (if IRQ)

7.1.5.10.65 FIQSTS_6 Register (Offset = 4D4h) [Reset = 0h]

FIQSTS_6 is shown in Figure 7-67 and described in Table 7-68.

Return to the Summary Table.

Group M Interrupt FIQ Enabled Status/Clear Register (M is 0 to 7) h400 + M x h20 + h14

Figure 7-67. FIQSTS_6 Register

31	30	29	28	27	26	25	24	23	22	21	20	19	18	17	16	15	14	13	12	11	10	9	8	7	6	5	4	3	2	1	0
MASK																															
R/W-0h																															

Table 7-68. FIQSTS_6 Register Field Descriptions

Bit	Field	Type	Reset	Description
31-0	MASK	R/W	0h	This is the masked status of the events in group M that are mapped to FIQ Each bit corresponds to event Q where Q = Mx32+Bit Read 0 Inactive, Disabled, or not an FIQ Read 1 Active/Pending, Enabled, and FIQ Write 0 No effect Write 1 Clear Interrupt Raw Status (if FIQ)

7.1.5.10.66 INTMAP_6 Register (Offset = 4D8h) [Reset = 0h]

INTMAP_6 is shown in Figure 7-68 and described in Table 7-69.

Return to the Summary Table.

Group M Interrupt Map Register (M is 0 to 7) h400 + M x h20 + h18

Figure 7-68. INTMAP_6 Register

31	30	29	28	27	26	25	24	23	22	21	20	19	18	17	16	15	14	13	12	11	10	9	8	7	6	5	4	3	2	1	0
MASK																															
R/W-0h																															

Table 7-69. INTMAP_6 Register Field Descriptions

Bit	Field	Type	Reset	Description
31-0	MASK	R/W	0h	This field is used to indicate which interrupt the corresponding event influences (if enabled) for event group M. Each bit corresponds to event Q where Q = Mx32+Bit 0 IRQ Interrupt (default) 1 FIQ Interrupt

7.1.5.10.67 INTTYPE_6 Register (Offset = 4DCh) [Reset = 0h]

INTTYPE_6 is shown in Figure 7-69 and described in Table 7-70.

Return to the Summary Table.

Group M Type Map Register (M is 0 to 7) h400 + M x h20 + 0x1C

Figure 7-69. INTTYPE_6 Register

31	30	29	28	27	26	25	24	23	22	21	20	19	18	17	16	15	14	13	12	11	10	9	8	7	6	5	4	3	2	1	0
VAL																															

Copyright © 2025 Texas Instruments Incorporated

Figure 7-69. INTTYPE_6 Register (continued)

R/W-0h

Table 7-70. INTTYPE_6 Register Field Descriptions

Bit	Field	Type	Reset	Description
31-0	VAL	R/W	0h	This field is used to indicate whether the source of an interrupt is a level (default) or a pulse for event group M. This is informational so that an ISR may query this register and know whether it has to clear a pulse event or a level event (see 3.4 Interrupt Handling). The value has no effect on how the VIM hardware functions. The input interrupts are agnostic as to whether they are pulse or level. Each bit corresponds to event Q where Q = Mx32+Bit 0 Level (default) 1 Pulse

7.1.5.10.68 RAW_7 Register (Offset = 4E0h) [Reset = 0h]

RAW_7 is shown in Figure 7-70 and described in Table 7-71.

Return to the Summary Table.

Group M Interrupt Raw Status/Set Register (M is 0 to 7) h400 + M x h20 + h00

Figure 7-70. RAW_7 Register

31	30	29	28	27	26	25	24	23	22	21	20	19	18	17	16	15	14	13	12	11	10	9	8	7	6	5	4	3	2	1	0
STS																															
R/W-0h																															

Table 7-71. RAW_7 Register Field Descriptions

Bit	Field	Type	Reset	Description
31-0	STS	R/W	0h	This is the raw status of the events in Group M Each bit corresponds to event Q where Q = Mx32+Bit Read 0 Inactive Read 1 Active/ Pending Write 0 No effect Write 1 Set to Interrupt Raw Status

7.1.5.10.69 STS_7 Register (Offset = 4E4h) [Reset = 0h]

STS_7 is shown in Figure 7-71 and described in Table 7-72.

Return to the Summary Table.

Group M Interrupt Enabled Status/Clear Register (M is 0 to 7) h400 + M x h20 + h04

Figure 7-71. STS_7 Register

31	30	29	28	27	26	25	24	23	22	21	20	19	18	17	16	15	14	13	12	11	10	9	8	7	6	5	4	3	2	1	0
MASK																															
R/W-0h																															

Table 7-72. STS_7 Register Field Descriptions

Bit	Field	Type	Reset	Description
31-0	MASK	R/W	0h	This is the masked status of the events in Group M Each bit corresponds to event Q where Q = Mx32+Bit Read 0 Inactive or Disabled Read 1 Active/Pending and Enabled Write 0 No effect Write 1 Clear Interrupt Raw Status

Copyright © 2025 Texas Instruments Incorporated

7.1.5.10.70 INTR_EN_SET_7 Register (Offset = 4E8h) [Reset = 0h]

INTR_EN_SET_7 is shown in Figure 7-72 and described in Table 7-73.

Return to the Summary Table.

Group M Interrupt Enabled Set Register (M is 0 to 7) h400 + M x h20 + h08

Figure 7-72. INTR_EN_SET_7 Register

31	30	29	28	27	26	25	24	23	22	21	20	19	18	17	16	15	14	13	12	11	10	9	8	7	6	5	4	3	2	1	0
MASK																															
R/W-0h																															

Table 7-73. INTR_EN_SET_7 Register Field Descriptions

Bit	Field	Type	Reset	Description
31-0	MASK	R/W	0h	This field is used to enable the mask of events in Group M Each bit corresponds to event Q where Q = Mx32+Bit Read 0 Disabled Read 1 Enabled Write 0 No effect Write 1 Set Enable

7.1.5.10.71 INTER_EN_CLR_7 Register (Offset = 4ECh) [Reset = 0h]

INTER_EN_CLR_7 is shown in Figure 7-73 and described in Table 7-74.

Return to the Summary Table.

Group M Interrupt Enabled Clear Register (M is 0 to 7) h400 + M x h20 + h0C

Figure 7-73. INTER_EN_CLR_7 Register

31	30	29	28	27	26	25	24	23	22	21	20	19	18	17	16	15	14	13	12	11	10	9	8	7	6	5	4	3	2	1	0
MASK																															
R/W-0h																															

Table 7-74. INTER_EN_CLR_7 Register Field Descriptions

Bit	Field	Type	Reset	Description
31-0	MASK	R/W	0h	This field is used to disable the mask of events in Group M Each bit corresponds to event Q where Q = Mx32+Bit Read 0 Disabled Read 1 Enabled Write 0 No effect Write 1 Clear Enable

7.1.5.10.72 IRQSTS_7 Register (Offset = 4F0h) [Reset = 0h]

IRQSTS_7 is shown in Figure 7-74 and described in Table 7-75.

Return to the Summary Table.

Group M Interrupt IRQ Enabled Status/Clear Register (M is 0 to 7) h400 + M x h20 + h10

Figure 7-74. IRQSTS_7 Register

31	30	29	28	27	26	25	24	23	22	21	20	19	18	17	16	15	14	13	12	11	10	9	8	7	6	5	4	3	2	1	0
MASK																															
R/W-0h																															

Copyright © 2025 Texas Instruments Incorporated

Table 7-75. IRQSTS_7 Register Field Descriptions

Bit	Field	Type	Reset	Description
31-0	MASK	R/W	0h	This is the masked status of the events in group M that are mapped to IRQ Each bit corresponds to event Q where Q = Mx32+Bit Read 0 Inactive, Disabled, or not an IRQ Read 1 Active/Pending, Enabled, and IRQ Write 0 No effect Write 1 Clear Interrupt Raw Status (if IRQ)

7.1.5.10.73 FIQSTS_7 Register (Offset = 4F4h) [Reset = 0h]

FIQSTS_7 is shown in Figure 7-75 and described in Table 7-76.

Return to the Summary Table.

Group M Interrupt FIQ Enabled Status/Clear Register (M is 0 to 7) h400 + M x h20 + h14

Figure 7-75. FIQSTS_7 Register

31	30	29	28	27	26	25	24	23	22	21	20	19	18	17	16	15	14	13	12	11	10	9	8	7	6	5	4	3	2	1	0
MASK																															
R/W-0h																															

Table 7-76. FIQSTS_7 Register Field Descriptions

Bit	Field	Type	Reset	Description
31-0	MASK	R/W	0h	This is the masked status of the events in group M that are mapped to FIQ Each bit corresponds to event Q where Q = Mx32+Bit Read 0 Inactive, Disabled, or not an FIQ Read 1 Active/Pending, Enabled, and FIQ Write 0 No effect Write 1 Clear Interrupt Raw Status (if FIQ)

7.1.5.10.74 INTMAP_7 Register (Offset = 4F8h) [Reset = 0h]

INTMAP_7 is shown in Figure 7-76 and described in Table 7-77.

Return to the Summary Table.

Group M Interrupt Map Register (M is 0 to 7) h400 + M x h20 + h18

Figure 7-76. INTMAP_7 Register

31	30	29	28	27	26	25	24	23	22	21	20	19	18	17	16	15	14	13	12	11	10	9	8	7	6	5	4	3	2	1	0
MASK																															
R/W-0h																															

Table 7-77. INTMAP_7 Register Field Descriptions

Bit	Field	Type	Reset	Description
31-0	MASK	R/W	0h	This field is used to indicate which interrupt the corresponding event influences (if enabled) for event group M. Each bit corresponds to event Q where Q = Mx32+Bit 0 IRQ Interrupt (default) 1 FIQ Interrupt

7.1.5.10.75 INTTYPE_7 Register (Offset = 4FCh) [Reset = 0h]

INTTYPE_7 is shown in Figure 7-77 and described in Table 7-78.

Return to the Summary Table.

Group M Type Map Register (M is 0 to 7) h400 + M x h20 + 0x1C

Figure 7-77. INTTYPE_7 Register

31	30	29	28	27	26	25	24	23	22	21	20	19	18	17	16	15	14	13	12	11	10	9	8	7	6	5	4	3	2	1	0
VAL																															

Copyright © 2025 Texas Instruments Incorporated

Figure 7-77. INTTYPE_7 Register (continued)

R/W-0h

Table 7-78. INTTYPE_7 Register Field Descriptions

Bit	Field	Type	Reset	Description
31-0	VAL	R/W	0h	This field is used to indicate whether the source of an interrupt is a level (default) or a pulse for event group M. This is informational so that an ISR may query this register and know whether it has to clear a pulse event or a level event (see 3.4 Interrupt Handling). The value has no effect on how the VIM hardware functions. The input interrupts are agnostic as to whether they are pulse or level. Each bit corresponds to event Q where Q = Mx32+Bit 0 Level (default) 1 Pulse

7.1.5.10.76 INTPRIORITY Register (Offset = 1000h) [Reset = Fh]

INTPRIORITY is shown in Figure 7-78 and described in Table 7-79.

Return to the Summary Table.

Instance Name	Offset
INTPRIORITY_0	1000h
INTPRIORITY_1	1004h
INTPRIORITY_2	1008h
INTPRIORITY_3	100Ch
INTPRIORITY_4	1010h
INTPRIORITY_5	1014h
INTPRIORITY_6	1018h
INTPRIORITY_7	101Ch
INTPRIORITY_8	1020h
INTPRIORITY_9	1024h
INTPRIORITY_10	1028h
INTPRIORITY_11	102Ch
INTPRIORITY_12	1030h
INTPRIORITY_13	1034h
INTPRIORITY_14	1038h
INTPRIORITY_15	103Ch
INTPRIORITY_16	1040h
INTPRIORITY_17	1044h
INTPRIORITY_18	1048h
INTPRIORITY_19	104Ch
INTPRIORITY_20	1050h
INTPRIORITY_21	1054h
INTPRIORITY_22	1058h
INTPRIORITY_23	105Ch
INTPRIORITY_24	1060h
INTPRIORITY_25	1064h
INTPRIORITY_26	1068h
INTPRIORITY_27	106Ch
INTPRIORITY_28	1070h
INTPRIORITY_29	1074h

Copyright © 2025 Texas Instruments Incorporated

Instance Name	Offset
INTPRIORITY_30	1078h
INTPRIORITY_31	107Ch
INTPRIORITY_32	1080h
INTPRIORITY_33	1084h
INTPRIORITY_34	1088h
INTPRIORITY_35	108Ch
INTPRIORITY_36	1090h
INTPRIORITY_37	1094h
INTPRIORITY_38	1098h
INTPRIORITY_39	109Ch
INTPRIORITY_40	10A0h
INTPRIORITY_41	10A4h
INTPRIORITY_42	10A8h
INTPRIORITY_43	10ACh
INTPRIORITY_44	10B0h
INTPRIORITY_45	10B4h
INTPRIORITY_46	10B8h
INTPRIORITY_47	10BCh
INTPRIORITY_48	10C0h
INTPRIORITY_49	10C4h
INTPRIORITY_50	10C8h
INTPRIORITY_51	10CCh
INTPRIORITY_52	10D0h
INTPRIORITY_53	10D4h
INTPRIORITY_54	10D8h
INTPRIORITY_55	10DCh
INTPRIORITY_56	10E0h
INTPRIORITY_57	10E4h
INTPRIORITY_58	10E8h
INTPRIORITY_59	10ECh
INTPRIORITY_60	10F0h
INTPRIORITY_61	10F4h
INTPRIORITY_62	10F8h
INTPRIORITY_63	10FCh
INTPRIORITY_64	1100h
INTPRIORITY_65	1104h
INTPRIORITY_66	1108h
INTPRIORITY_67	110Ch
INTPRIORITY_68	1110h
INTPRIORITY_69	1114h
INTPRIORITY_70	1118h
INTPRIORITY_71	111Ch
INTPRIORITY_72	1120h
INTPRIORITY_73	1124h
INTPRIORITY_74	1128h
INTPRIORITY_75	112Ch

Copyright © 2025 Texas Instruments Incorporated

Instance Name	Offset
INTPRIORITY_76	1130h
INTPRIORITY_77	1134h
INTPRIORITY_78	1138h
INTPRIORITY_79	113Ch
INTPRIORITY_80	1140h
INTPRIORITY_81	1144h
INTPRIORITY_82	1148h
INTPRIORITY_83	114Ch
INTPRIORITY_84	1150h
INTPRIORITY_85	1154h
INTPRIORITY_86	1158h
INTPRIORITY_87	115Ch
INTPRIORITY_88	1160h
INTPRIORITY_89	1164h
INTPRIORITY_90	1168h
INTPRIORITY_91	116Ch
INTPRIORITY_92	1170h
INTPRIORITY_93	1174h
INTPRIORITY_94	1178h
INTPRIORITY_95	17Ch
INTPRIORITY_96	1180h
INTPRIORITY_97	1184h
INTPRIORITY_98	1188h
INTPRIORITY_99	118Ch
INTPRIORITY_100	1190h
INTPRIORITY_101	1194h
INTPRIORITY_102	1198h
INTPRIORITY_103	1119Ch
INTPRIORITY_104	11A0h
INTPRIORITY_105	111A4h
INTPRIORITY_106	11A8h
INTPRIORITY_107	11ACh
INTPRIORITY_108	11B0h
INTPRIORITY_109	11B4h
INTPRIORITY_110	11B8h
INTPRIORITY_111	11BCh
INTPRIORITY_112	11C0h
INTPRIORITY_113	11C4h
INTPRIORITY_114	11C8h
INTPRIORITY_115	11CCh
INTPRIORITY_116	11D0h
INTPRIORITY_117	11D4h
INTPRIORITY_118	11D8h
INTPRIORITY_119	11DCh
INTPRIORITY_120	11E0h
INTPRIORITY_121	11E4h

Copyright © 2025 Texas Instruments Incorporated

Instance Name	Offset
INTPRIORITY_122	11E8h
INTPRIORITY_123	11ECh
INTPRIORITY_124	11F0h
INTPRIORITY_125	11F4h
INTPRIORITY_126	11F8h
INTPRIORITY_127	11FCh
INTPRIORITY_128	1200h
INTPRIORITY_129	1204h
INTPRIORITY_130	1208h
INTPRIORITY_131	120Ch
INTPRIORITY_132	1210h
INTPRIORITY_133	1214h
INTPRIORITY_134	1218h
INTPRIORITY_135	121Ch
INTPRIORITY_136	1220h
INTPRIORITY_137	1224h
INTPRIORITY_138	1228h
INTPRIORITY_139	122Ch
INTPRIORITY_140	1230h
INTPRIORITY_141	1234h
INTPRIORITY_142	1238h
INTPRIORITY_143	123Ch
INTPRIORITY_144	1240h
INTPRIORITY_145	1244h
INTPRIORITY_146	1248h
INTPRIORITY_147	124Ch
INTPRIORITY_148	1250h
INTPRIORITY_149	1254h
INTPRIORITY_150	1258h
INTPRIORITY_151	125Ch
INTPRIORITY_152	1260h
INTPRIORITY_153	1264h
INTPRIORITY_154	1268h
INTPRIORITY_155	126Ch
INTPRIORITY_156	1270h
INTPRIORITY_157	1274h
INTPRIORITY_158	1278h
INTPRIORITY_159	127Ch
INTPRIORITY_160	1280h
INTPRIORITY_161	1284h
INTPRIORITY_162	1288h
INTPRIORITY_163	128Ch
INTPRIORITY_164	1290h
INTPRIORITY_165	1294h
INTPRIORITY_166	1298h
INTPRIORITY_167	129Ch

Copyright © 2025 Texas Instruments Incorporated

Instance Name	Offset
INTPRIORITY_168	12A0h
INTPRIORITY_169	12A4h
INTPRIORITY_170	12A8h
INTPRIORITY_171	12ACh
INTPRIORITY_172	12B0h
INTPRIORITY_173	12B4h
INTPRIORITY_174	12B8h
INTPRIORITY_175	12BCh
INTPRIORITY_176	12C0h
INTPRIORITY_177	12C4h
INTPRIORITY_178	12C8h
INTPRIORITY_179	12CCh
INTPRIORITY_180	12D0h
INTPRIORITY_181	12D4h
INTPRIORITY_182	12D8h
INTPRIORITY_183	12DCh
INTPRIORITY_184	12E0h
INTPRIORITY_185	12E4h
INTPRIORITY_186	12E8h
INTPRIORITY_187	12ECh
INTPRIORITY_188	12F0h
INTPRIORITY_189	12F4h
INTPRIORITY_190	12F8h
INTPRIORITY_191	12FCh
INTPRIORITY_192	1300h
INTPRIORITY_193	1304h
INTPRIORITY_194	1308h
INTPRIORITY_195	130Ch
INTPRIORITY_196	1310h
INTPRIORITY_197	1314h
INTPRIORITY_198	1318h
INTPRIORITY_199	131Ch
INTPRIORITY_200	1320h
INTPRIORITY_201	1324h
INTPRIORITY_202	1328h
INTPRIORITY_203	132Ch
INTPRIORITY_204	1330h
INTPRIORITY_205	1334h
INTPRIORITY_206	1338h
INTPRIORITY_207	133Ch
INTPRIORITY_208	1340h
INTPRIORITY_209	1344h
INTPRIORITY_210	1348h
INTPRIORITY_211	134Ch
INTPRIORITY_212	1350h
INTPRIORITY_213	1354h

Copyright © 2025 Texas Instruments Incorporated

Instance Name	Offset
INTPRIORITY_214	1358h
INTPRIORITY_215	135Ch
INTPRIORITY_216	1360h
INTPRIORITY_217	1364h
INTPRIORITY_218	1368h
INTPRIORITY_219	136Ch
INTPRIORITY_220	1370h
INTPRIORITY_221	1374h
INTPRIORITY_222	1378h
INTPRIORITY_223	137Ch
INTPRIORITY_224	1380h
INTPRIORITY_225	1384h
INTPRIORITY_226	1388h
INTPRIORITY_227	138Ch
INTPRIORITY_228	1390h
INTPRIORITY_229	1394h
INTPRIORITY_230	1398h
INTPRIORITY_231	139Ch
INTPRIORITY_232	13A0h
INTPRIORITY_233	13A4h
INTPRIORITY_234	13A8h
INTPRIORITY_235	13ACh
INTPRIORITY_236	13B0h
INTPRIORITY_237	13B4h
INTPRIORITY_238	13B8h
INTPRIORITY_239	13BCh
INTPRIORITY_240	13C0h
INTPRIORITY_241	13C4h
INTPRIORITY_242	13C8h
INTPRIORITY_243	13CCh
INTPRIORITY_244	13D0h
INTPRIORITY_245	13D4h
INTPRIORITY_246	13D8h
INTPRIORITY_247	13DCh
INTPRIORITY_248	13E0h
INTPRIORITY_249	13E4h
INTPRIORITY_250	13E8h
INTPRIORITY_251	13ECh
INTPRIORITY_252	13F0h
INTPRIORITY_253	13F4h
INTPRIORITY_254	13F8h
INTPRIORITY_255	13FCh

Figure 7-78. INTPRIORITY Register

31	30	29	28	27	26	25	24	23	22	21	20	19	18	17	16	15	14	13	12	11	10	9	8	7	6	5	4	3	2	1	0
RES19																												PRI			

Copyright © 2025 Texas Instruments Incorporated

Figure 7-78. INTPRIORITY Register (continued)

R-0h	R/W-Fh

Table 7-79. INTPRIORITY Register Field Descriptions

Bit	Field	Type	Reset	Description
31-4	RES19	R	0h	RESERVE FIELD
3-0	PRI	R/W	Fh	This is the priority for interrupt Q. If two interrupts have the same priority, then whichever interrupt has the lower number Q wins arbitration 0 Highest Priority 15 Lowest Priority (Default)

7.1.5.10.77 INTVECTOR Register (Offset = X) [Reset = 0h]

INTVECTOR is shown in Figure 7-79 and described in Table 7-80.

Return to the Summary Table.

Instance Name	Offset
INTVECTOR_0	2000h
INTVECTOR_1	2004h
INTVECTOR_2	2008h
INTVECTOR_3	200Ch
INTVECTOR_4	2010h
INTVECTOR_5	2014h
INTVECTOR_6	2018h
INTVECTOR_7	201Ch
INTVECTOR_8	2020h
INTVECTOR_9	2024h
INTVECTOR_10	2028h
INTVECTOR_11	202Ch
INTVECTOR_12	2030h
INTVECTOR_13	2034h
INTVECTOR_14	2038h
INTVECTOR_15	203Ch
INTVECTOR_16	2040h
INTVECTOR_17	2044h
INTVECTOR_18	2048h
INTVECTOR_19	204Ch
INTVECTOR_20	2050h
INTVECTOR_21	2054h
INTVECTOR_22	2058h
INTVECTOR_23	205Ch
INTVECTOR_24	2060h
INTVECTOR_25	2064h
INTVECTOR_26	2068h
INTVECTOR_27	206Ch
INTVECTOR_28	2070h
INTVECTOR_29	2074h
INTVECTOR_30	2078h
INTVECTOR_31	207Ch

Copyright © 2025 Texas Instruments Incorporated

Instance Name	Offset
INTVECTOR_32	2080h
INTVECTOR_33	2084h
INTVECTOR_34	2088h
INTVECTOR_35	208Ch
INTVECTOR_36	2090h
INTVECTOR_37	2094h
INTVECTOR_38	2098h
INTVECTOR_39	209Ch
INTVECTOR_40	20A0h
INTVECTOR_41	20A4h
INTVECTOR_42	20A8h
INTVECTOR_43	20ACh
INTVECTOR_44	20B0h
INTVECTOR_45	20B4h
INTVECTOR_46	20B8h
INTVECTOR_47	20BCh
INTVECTOR_48	20C0h
INTVECTOR_49	20C4h
INTVECTOR_50	20C8h
INTVECTOR_51	20CCh
INTVECTOR_52	20D0h
INTVECTOR_53	20D4h
INTVECTOR_54	20D8h
INTVECTOR_55	20DCh
INTVECTOR_56	20E0h
INTVECTOR_57	20E4h
INTVECTOR_58	20E8h
INTVECTOR_59	20ECh
INTVECTOR_60	20F0h
INTVECTOR_61	20F4h
INTVECTOR_62	20F8h
INTVECTOR_63	20FCh
INTVECTOR_64	2100h
INTVECTOR_65	2104h
INTVECTOR_66	2108h
INTVECTOR_67	210Ch
INTVECTOR_68	2110h
INTVECTOR_69	2114h
INTVECTOR_70	2118h
INTVECTOR_71	211Ch
INTVECTOR_72	2120h
INTVECTOR_73	2124h
INTVECTOR_74	2128h
INTVECTOR_75	212Ch
INTVECTOR_76	2130h
INTVECTOR_77	2134h

Copyright © 2025 Texas Instruments Incorporated

Instance Name	Offset
INTVECTOR_78	2138h
INTVECTOR_79	213Ch
INTVECTOR_80	2140h
INTVECTOR_81	2144h
INTVECTOR_82	2148h
INTVECTOR_83	214Ch
INTVECTOR_84	2150h
INTVECTOR_85	2154h
INTVECTOR_86	2158h
INTVECTOR_87	215Ch
INTVECTOR_88	2160h
INTVECTOR_89	2164h
INTVECTOR_90	2168h
INTVECTOR_91	216Ch
INTVECTOR_92	2170h
INTVECTOR_93	2174h
INTVECTOR_94	2178h
INTVECTOR_95	217Ch
INTVECTOR_96	2180h
INTVECTOR_97	2184h
INTVECTOR_98	2188h
INTVECTOR_99	218Ch
INTVECTOR_100	2190h
INTVECTOR_101	2194h
INTVECTOR_102	2198h
INTVECTOR_103	219Ch
INTVECTOR_104	21A0h
INTVECTOR_105	21A4h
INTVECTOR_106	21A8h
INTVECTOR_107	21ACh
INTVECTOR_108	21B0h
INTVECTOR_109	21B4h
INTVECTOR_110	21B8h
INTVECTOR_111	21BCh
INTVECTOR_112	21C0h
INTVECTOR_113	21C4h
INTVECTOR_114	21C8h
INTVECTOR_115	21CCh
INTVECTOR_116	21D0h
INTVECTOR_117	21D4h
INTVECTOR_118	21D8h
INTVECTOR_119	21DCh
INTVECTOR_120	21E0h
INTVECTOR_121	21E4h
INTVECTOR_122	21E8h
INTVECTOR_123	21ECh

Copyright © 2025 Texas Instruments Incorporated

Instance Name	Offset
INTVECTOR_124	21F0h
INTVECTOR_125	21F4h
INTVECTOR_126	21F8h
INTVECTOR_127	21FCh
INTVECTOR_128	2200h
INTVECTOR_129	2204h
INTVECTOR_130	2208h
INTVECTOR_131	220Ch
INTVECTOR_132	2210h
INTVECTOR_133	2214h
INTVECTOR_134	2218h
INTVECTOR_135	221Ch
INTVECTOR_136	2220h
INTVECTOR_137	2224h
INTVECTOR_138	2228h
INTVECTOR_139	222Ch
INTVECTOR_140	2230h
INTVECTOR_141	2234h
INTVECTOR_142	2238h
INTVECTOR_143	223Ch
INTVECTOR_144	2240h
INTVECTOR_145	2244h
INTVECTOR_146	2248h
INTVECTOR_147	224Ch
INTVECTOR_148	2250h
INTVECTOR_149	2254h
INTVECTOR_150	2258h
INTVECTOR_151	225Ch
INTVECTOR_152	2260h
INTVECTOR_153	2264h
INTVECTOR_154	2268h
INTVECTOR_155	226Ch
INTVECTOR_156	2270h
INTVECTOR_157	2274h
INTVECTOR_158	2278h
INTVECTOR_159	227Ch
INTVECTOR_160	2280h
INTVECTOR_161	2284h
INTVECTOR_162	2288h
INTVECTOR_163	228Ch
INTVECTOR_164	2290h
INTVECTOR_165	2294h
INTVECTOR_166	2298h
INTVECTOR_167	229Ch
INTVECTOR_168	22A0h
INTVECTOR_169	22A4h

Copyright © 2025 Texas Instruments Incorporated

Instance Name	Offset
INTVECTOR_170	22A8h
INTVECTOR_171	22ACh
INTVECTOR_172	22B0h
INTVECTOR_173	22B4h
INTVECTOR_174	22B8h
INTVECTOR_175	22BCh
INTVECTOR_176	22C0h
INTVECTOR_177	22C4h
INTVECTOR_178	22C8h
INTVECTOR_179	22CCh
INTVECTOR_180	22D0h
INTVECTOR_181	22D4h
INTVECTOR_182	22D8h
INTVECTOR_183	22DCh
INTVECTOR_184	22E0h
INTVECTOR_185	22E4h
INTVECTOR_186	22E8h
INTVECTOR_187	22ECh
INTVECTOR_188	22F0h
INTVECTOR_189	22F4h
INTVECTOR_190	22F8h
INTVECTOR_191	22FCh
INTVECTOR_192	2300h
INTVECTOR_193	2304h
INTVECTOR_194	2308h
INTVECTOR_195	230Ch
INTVECTOR_196	2310h
INTVECTOR_197	2314h
INTVECTOR_198	2318h
INTVECTOR_199	231Ch
INTVECTOR_200	2320h
INTVECTOR_201	2324h
INTVECTOR_202	2328h
INTVECTOR_203	232Ch
INTVECTOR_204	2330h
INTVECTOR_205	2334h
INTVECTOR_206	2338h
INTVECTOR_207	233Ch
INTVECTOR_208	2340h
INTVECTOR_209	2344h
INTVECTOR_210	2348h
INTVECTOR_211	234Ch
INTVECTOR_212	2350h
INTVECTOR_213	2354h
INTVECTOR_214	2358h
INTVECTOR_215	235Ch

Copyright © 2025 Texas Instruments Incorporated

Instance Name	Offset
INTVECTOR_216	2360h
INTVECTOR_217	2364h
INTVECTOR_218	2368h
INTVECTOR_219	236Ch
INTVECTOR_220	2370h
INTVECTOR_221	2374h
INTVECTOR_222	2378h
INTVECTOR_223	237Ch
INTVECTOR_224	2380h
INTVECTOR_225	2384h
INTVECTOR_226	2388h
INTVECTOR_227	238Ch
INTVECTOR_228	2390h
INTVECTOR_229	2394h
INTVECTOR_230	2398h
INTVECTOR_231	239Ch
INTVECTOR_232	23A0h
INTVECTOR_233	23A4h
INTVECTOR_234	23A8h
INTVECTOR_235	23ACh
INTVECTOR_236	23B0h
INTVECTOR_237	23B4h
INTVECTOR_238	23B8h
INTVECTOR_239	23BCh
INTVECTOR_240	23C0h
INTVECTOR_241	23C4h
INTVECTOR_242	23C8h
INTVECTOR_243	23CCh
INTVECTOR_244	23D0h
INTVECTOR_245	23D4h
INTVECTOR_246	23D8h
INTVECTOR_247	23DCh
INTVECTOR_248	23E0h
INTVECTOR_249	23E4h
INTVECTOR_250	23E8h
INTVECTOR_251	23ECh
INTVECTOR_252	23F0h
INTVECTOR_253	23F4h
INTVECTOR_254	23F8h
INTVECTOR_255	23FCh

Figure 7-79. INTVECTOR Register

31	30	29	28	27	26	25	24	23	22	21	20	19	18	17	16
ADDR															
R/W-0h															
15	14	13	12	11	10	9	8	7	6	5	4	3	2	1	0

Copyright © 2025 Texas Instruments Incorporated

Figure 7-79. INTVECTOR Register (continued)

ADDR	RES20
R/W-0h	R-0h

Table 7-80. INTVECTOR Register Field Descriptions

Bit	Field	Type	Reset	Description
31-2	ADDR	R/W	0h	This is the 32-bit Vector Address associated with interrupt Q. It is the address that will be reflected in the IRQ Vector Address (Base Address + 0x18) or FIQ Vector Address (Base Address + 0x1C) and the VECADDR pin when interrupt Q is the active interrupt. Internally, these values are kept in a RAM. The FIQ and IRQ state machines have priority access to this RAM. Writes to this register will be piped internally, but further writes to the MMR interface may be stalled until this write has a chance to complete in the RAM. The new Vector Address will not take effect until this write completes to the RAM. In order to tell if this write has completed, software may read this register back. That read will not be able to complete unless the write has landed. Reads to this register will stall the MMR interface until the read is able to be completed at the RAM.
1-0	RES20	R	0h	Reserved. Read as 0. The lower 2 bits of the 32-bit vector address are always 0. Vector addresses must be 32-bit aligned.

7.1.6 Resets

AM273x supports the following resets:

- CR5SS_POR_RST: This is the full MCU R5F subsystem reset. It is also the Power On Reset.
- CR5ASS_RST: This reset is only for the Cortex R5F and the Vectored Interrupt Manager of the CoreA. None of the other logics are reset.
- CR5A_RST: This only reset the cortex of the R5F of the CoreA.
-
-
- VIMA_RST: This only reset the vectored interrupt manager of the CoreA.
-

7.1.6.1 R5F Subsystem Reset Trigger

For the safe reset of the R5F subsystem, follow this reset sequence:

1. Write 3'b111 to MSS_CTRL: R5_CONTROL: R5_CONTROL_RESET_FSM_TRIGGER starts the sequencer.
2. The sequencer is waiting for WFI from only CR5A if WFI_CHECKEN for corresponding resets is programmed. The sequencer isolates CR5SS when it receives WFI from CR5A.
3. The sequencer triggers CR5SS_POR_RST, which triggers resets to all resets mentioned in resets-table.
4. The intent is to reset CR5SS when it is in isolation. Thus, before Step 1, ensure MSS_RCM:RST2ASSERTDLY is programmed to 0;.
5. Reset is asserted for RST_ASSERDLY: RST_ASSERDLY_COMMON number of clock cycles, and released.

Copyright © 2025 Texas Instruments Incorporated

7.2 TI C66x DSP Subsystem (DSS)Overview

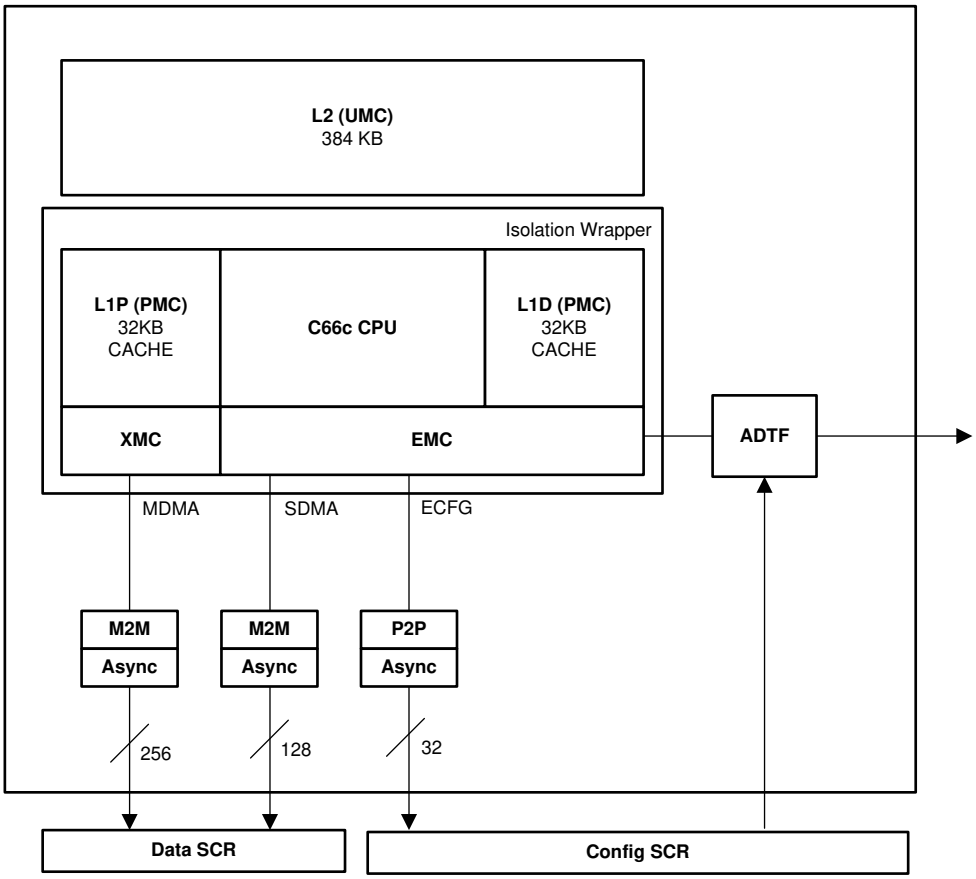

Figure 7-80. DSP C66x Subsystem

Copyright © 2025 Texas Instruments Incorporated

7.2.1 C66x DSP Subsystem

The purpose of this section is to provide an overview of the DSP subsystem (C66x CorePac) along with some integration details.

7.2.1.1 DSP Subsystem Overview

The DSP subsystem (C66x CorePac) supports the following key features:

- Fixed/Floating-point C66x CPU based on a superset of the C64x+ and C67x+ ISA
- Program Memory Controller (PMC):
  - 32KB Level 1 Program (L1P) Cache/SRAM
- Data Memory Controller (DMC):
  - 32KB L1 Data (L1D) Cache/SRAM
- L2 Memory Controller:
  - 384KB L2 RAM with up to 256KB of configurable into cache
- External Memory Controller (EMC):
  - Internal DMA (IDMA) engine
  - One 128-bit VBUSM slave port from DMA access at Div-by-2 clock
  - One 32-bit VBUSP master port to CFG access at Div-by-2 clock
- XMC (Extended Memory Controller):
  - One 256-bit port to L3 memory at Div-by-2 clock
- Multistream prefetch buffer
- Address extension/translation (32-bit to 36-bit)
- Memory protection for multiple segments
- Memory protection for all internal L1/L2 RAM
- Error Detection for L1P
- Error Detection and Correction for L1D
- Error Detection and Correction for all L2
- Integrated C66x CorePac interrupt controller (INTC) that works in conjunction with Chip-level Interrupt Controller (CIC) for distribution of system interrupts to the C66x core. Interrupts can be routed directly to the C66x core or through the CIC module in a flexible manner
- Integrated leakage and dynamic power management
- Debug/emulation capabilities:
  - Support for halt mode, real time and monitor mode debug capabilities
  - Support for processor instruction trace and system trace (**printf**-style debug)
- Error Detection for L1P Data and Tag RAMs
- Error Detection and Correction for L1D Data and Tag RAMs
- Error Detection and Correction for all L2 Data and Tag RAMs

Figure 7-81 shows an overview of the C66x CorePac.

Copyright © 2025 Texas Instruments Incorporated

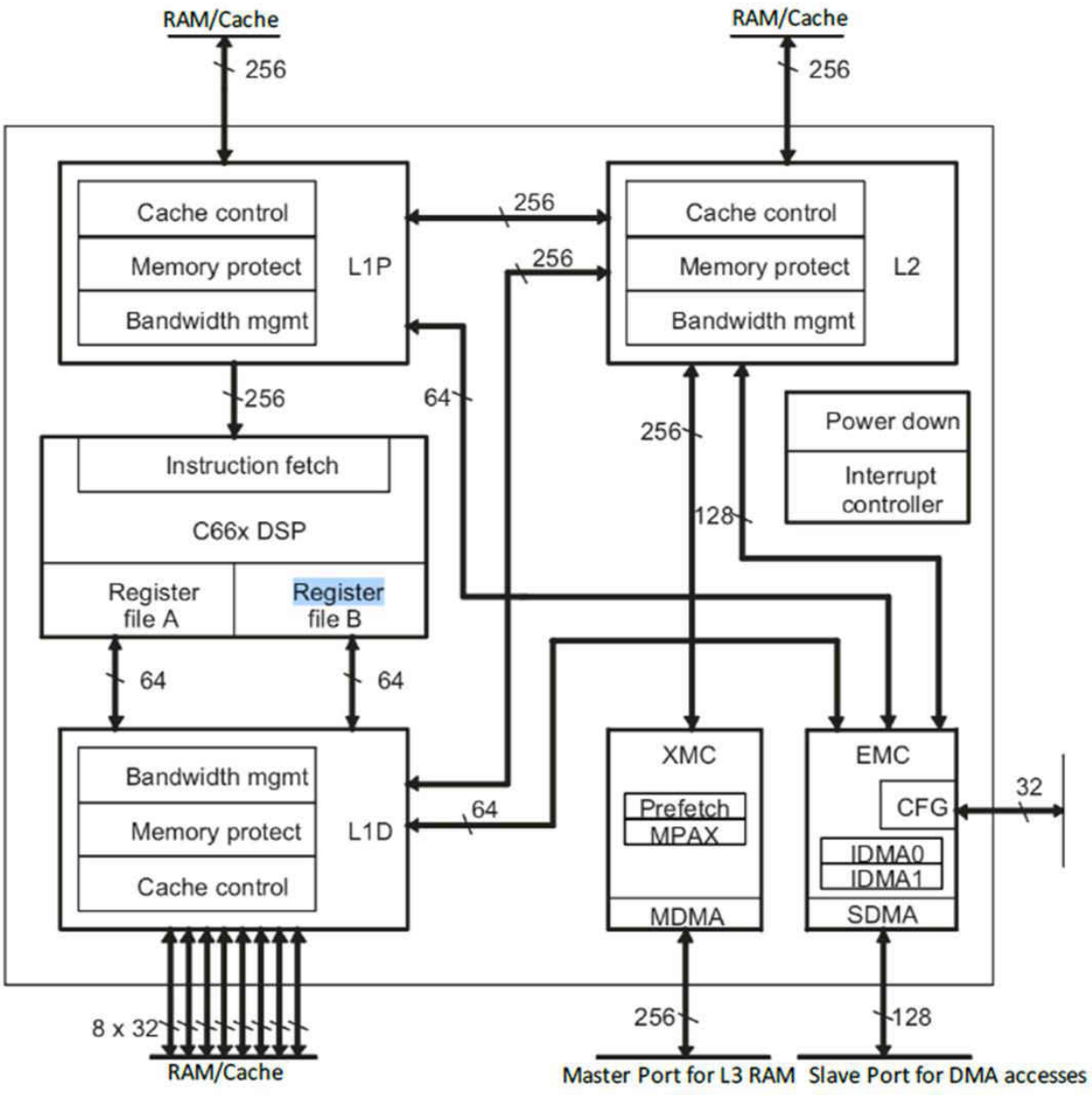

Figure 7-81. C66x CorePac Overview

For more information about:

- C66x CorePac, see the *TMS320C66x DSP CorePac User Guide* (SPRUGW0).
- C66x CPU core, see the *TMS320C66x DSP CPU and Instruction Set Reference Guide* (SPRUGH7).
- C66x cache memory system, see the *TMS320C66x DSP Cache User Guide* (SPRUGY8).
- C66x debug/trace support, see Section 12.1.

Copyright © 2025 Texas Instruments Incorporated

7.2.1.2 DSP Subsystem Integration

To turn on DSP power, please follow DSP power domain for details. To configure the DSP clock, please refer to section 1.5.3.3, DSS_DSP_CLK for clock source, divider, and gating selections details.

7.2.1.3 DSP Interrupt Sources

Refer to Section 9.2

7.2.1.4 DSP Subsystem Functional Description

For detailed DSP subsystem functional description, see the documents referenced in Section 8.2.1.1 .

Copyright © 2025 Texas Instruments Incorporated

7.2.1.5 DSP Subsystem Registers

Table 7-81 lists the memory-mapped registers for the C66x CorePac. All register offset addresses not listed in Table 7-81 should be considered as reserved locations and the register contents should not be modified. For base addresses of the DSP subsystem internal modules, see #unique_91.

The C66x CorePac registers (DSP_ICFG) are described in detail in the *TMS320C66x DSP CorePac User Guide* (SPRUGW0).

Table 7-81. C66x CorePac Registers

Address	Acronym	Register Name
01800000h to 0180000Ch	EVTFLAG_0 to EVTFLAG_3	Event Flag Registers
01800020h to 0180002Ch	EVTSET_0 to EVTSET_3	Event Set Registers
01800040h to 0180004Ch	EVTCLR_0 to EVTCLR_3	Event Clear Registers
01800080h to 0180008Ch	EVTMASK_0 to EVTMASK_3	Event Mask Registers
018000A0h to 018000ACh	MEVTFLAG_0 to MEVTFLAG_3	Masked Event Flag Registers
018000C0h to 018000CCh	EXPMASK_0 to EXPMASK_3	Exception Mask Registers
018000E0h to 018000ECh	MEXPFLAG_0 to MEXPFLAG_3	Masked Exception Flag Registers
01800104h	INTMUX1	Interrupt Mux Register
01800108h	INTMUX2	Interrupt Mux Register
0180010Ch	INTMUX3	Interrupt Mux Register
01800140h	AEGMUX0	Advanced Event Generator Mux Register
01800144h	AEGMUX1	Advanced Event Generator Mux Register
01800180h	INTXSTAT	Interrupt Exception Status Register
01800184h	INTXCLR	Interrupt Exception Clear Register
01800188h	INTDMASK	Dropped Interrupt Mask Register
018001C0h	EVTASRT	Event Assert Register
01810000h	PDCCMD	Power-Down Controller Command Register
01811100h	EDCINTMASK	Error Detect and Correct Interrupt Mask Register
01812000h	MM_REVID	C66x CorePac Revision ID Register
01820000h	IDMA0_STAT	IDMA Channel 0 Status Register
01820004h	IDMA0_MASK	IDMA Channel 0 Mask Register
01820008h	IDMA0_SOURCE	IDMA Channel 0 Source Address Register
0182000Ch	IDMA0_DEST	IDMA Channel 0 Destination Address Register
01820010h	IDMA0_COUNT	IDMA Channel 0 Count Register
01820100h	IDMA1_STAT	IDMA Channel 1 Status Register
01820108h	IDMA1_SOURCE	IDMA Channel 1 Source Address Register
0182010Ch	IDMA1_DEST	IDMA Channel 1 Destination Address Register
01820110h	IDMA1_COUNT	IDMA Channel 1 Count Register
01820200h	CPUARBE	EMC DSP Arbitration Control Register
01820204h	IDMAARBE	EMC IDMA Arbitration Control Register
01820208h	SDMAARBE	EMC Slave DMA Arbitration Control Register
01820210h	ECFGARBE	EMC CFG Arbitration Control Register
01820300h	ICFGMPFAR	CFG Memory Protection Fault Address Register
01820304h	ICFGMPFSR	CFG Memory Protection Fault Status Register

Copyright © 2025 Texas Instruments Incorporated

Table 7-81. C66x CorePac Registers (continued)

Address	Acronym	Register Name
01820308h	ICFGMPFCR	CFG Memory Protection Fault Command Register
01820408h	ECFGERR	CFG Bus Error Register
0182040Ch	ECFGERRCLR	CFG Bus Error Clear Register
01820500h	PAMAP0	PAMAP Register
01820504h	PAMAP1	PAMAP Register
01820508h	PAMAP2	PAMAP Register
0182050Ch	PAMAP3	PAMAP Register
01820510h	PAMAP4	PAMAP Register
01820514h	PAMAP5	PAMAP Register
01820518h	PAMAP6	PAMAP Register
0182051Ch	PAMAP7	PAMAP Register
01820520h	PAMAP8	PAMAP Register
01820524h	PAMAP9	PAMAP Register
01820528h	PAMAP10	PAMAP Register
0182052Ch	PAMAP11	PAMAP Register
01820530h	PAMAP12	PAMAP Register
01820534h	PAMAP13	PAMAP Register
01820538h	PAMAP14	PAMAP Register
0182053Ch	PAMAP15	PAMAP Register
01821104h	EDCINTFLG	Error Detect and Correct Interrupt Flag Register
01821108h	L1DEDCMD	L1D Error Detect Command Register
0182110Ch	L1DDCSTAT	L1D Error Detect DATA Correctable Status Register
01821110h	L1DDNCSTAT	L1D Error Detect DATA Non-Correctable Status Register
01821114h	L1DTCSTAT	L1D Error Detect TAG Correctable Status Register
01821118h	L1DTNCSTAT	L1D Error Detect TAG Non-Correctable Status Register
0182111Ch	L1DDEDADDR	L1D Error Detect Correctable and Non-Correctable DATA Address Register
01821120h	L1DTEDADDR	L1D Error Detect Correctable and Non-Correctable TAG Address Register
01821124h	L1DEDCNT	L1D EDC Count Register
01821128h	L2TEDCMD	L2 Error Detect Command Regsiter
0182112Ch	L2TCSTAT	L2 Error Detect TAG Correctable Status Register
01821130h	L2TNCSTAT	L2 Error Detect TAG Non-Correctable Status Register
01821134h	L2TEDADDR	L2 Error Detect TAG Correctable and Non-Correctable Address Register
01821138h	L2MCSTAT	L2 Error Detect MPPA Correctable Status Register
0182113Ch	L2MNCSTAT	L2 Error Detect MPPA Non-Correctable Status Register
01821140h	L2MEDADDR	L2 Error Detect MPPA Correctable and Non-Correctable Address Register
01821144h	L2SCSTAT	L2 Error Detect SNOP Correctable Stauts Register
01821148h	L2SNCSTAT	L2 Error Detect SNOP Non-Correctable Stauts Register
0182114Ch	L2SEDADDR	L2 Error Detect SNOP Correctable and Non-Correctable Address Register
01821150h	L2LCSTAT	L2 Error Detect LRU Correctable Status Register
01821154h	L2LNCSTAT	L2 Error Detect LRU Non-Correctable Status Register
01821158h	L2LEDADDR	L2 Error Detect LRU Correctable and Non-Correctable Address Register
0182115Ch	L2TEDCNT	L2 Error Detect Parity Error Count Register
01821160h	L1PTEDCMD	L1P Error Detect TAG Command Register
01821164h	L1PTEDSTAT	L1P Error Detect TAG Status Register
01821168h	L1PTEDADDR	L1P Error Detect TAG Lower Address Register

Copyright © 2025 Texas Instruments Incorporated

Table 7-81. C66x CorePac Registers (continued)

Address	Acronym	Register Name
0182116Ch	L1DTEDCNT	L1P Error Detect TAG Parity Error Count Register
01840000h	L2CFG	L2 Configuration Register
01840020h	L1PCFG	L1P Configuration Register
01840024h	L1PCC	L1P Cache Control Register
01840040h	L1DCFG	L1D Cache Configuration Register
01840044h	L1DCC	L1D Cache Control Register
01841000h	CPUARBU	L2 DSP Arbitration Control Register
01841004h	IDMAARBU	L2 IDMA Arbitration Control Register
01841008h	SDMAARBU	L2 Slave DMA Arbitration Control Register
0184100Ch	UCARBU	L2 User Coherence Arbitration Control Register
01841010h	MDMAARBU	L2 Master DMA Arbitration Control Register
01841040h	CPUARBD	L1 DSP Arbitration Control Register
01841044h	IDMAARBD	L1 IDMA Arbitration Control Register
01841048h	SDMAARBD	L1 Slave DMA Arbitration Control Register
0184104Ch	UCARBD	L1 User Coherence Arbitration Control Register
01844000h	L2WBAR	L2 Writeback Base Address Register
01844004h	L2WWC	L2 Writeback Word Count Register
01844010h	L2WIBAR	L2 Writeback-Invalidate Base Address Register
01844014h	L2WIWC	L2 Writeback-Invalidate Word Count Register
01844018h	L2IBAR	L2 Invalidate Base Address Register
0184401Ch	L2IWC	L2 Invalidate Word Count Register
01844020h	L1PIBAR	L1 Program Invalidate Base Address Register
01844024h	L1PIWC	L1 Program Invalidate Word Count Register
01844030h	L1DWIBAR	L1D Writeback-Invalidate Base Address Register
01844034h	L1DWIWC	L1D Writeback-Invalidate Word Count Register
01844040h	L1DWBAR	L1D Writeback Base Address Register
01844044h	L1DWWC	L1D Writeback Word Count Register
01844048h	L1DIBAR	L1D Invalidate Base Address Register
0184404Ch	L1DIWC	L1D Invalidate Word Count Register
01845000h	L2WB	L2 Writeback Register
01845004h	L2WBINV	L2 Writeback-Invalidate Register
01845008h	L2INV	L2 Invalidate Register
01845028h	L1PINV	L1 Program Invalidate Register
01845040h	L1DWB	L1D Writeback Register
01845044h	L1DWBINV	L1D Writeback-Invalidate Register
01845048h	L1DINV	L1D Invalidate Register
01846004h	L2EDSTAT	L2 Error Detection Status Register
01846008h	L2EDCMD	L2 Error Detection Command Register
0184600Ch	L2EDADDR	L2 Error Detection Address Register
01846018h	L2EDCPEC	L2 Error Detection Correctable Parity Error Counter Register
0184601Ch	L2EDCNEC	L2 Error Detection Non-correctable Parity Error Counter Register
01846020h	MDMAERR	MDMA Bus Error Register
01846024h	MDMAERRCLR	MDMA Bus Error Clear Register
01846030h	L2EDCEN	L2 Error Detection and Correction Enable Register
01846404h	L1PEDSTAT	L1P Error Detection Status Register

Copyright © 2025 Texas Instruments Incorporated

Table 7-81. C66x CorePac Registers (continued)

Address	Acronym	Register Name
01846408h	L1PEDCMD	L1P Error Detection Command Register
0184640Ch	L1PEDADDR	L1P Error Detection Address Register
01848000h to 018483FCh	MAR_0 to MAR_255	Memory Attribute Registers
0184A000h	L2MPFAR	L2 Memory Protection Fault Address Register
0184A004h	L2MPFSR	L2 Memory Protection Fault Set Register
0184A008h	L2MPFCR	L2 Memory Protection Fault Clear Register
0184A200h to 0184A27Ch	L2MPPA_0 to L2MPPA_31	L2 Memory Protection Page Attribute Registers
0184A400h	L1PMPFAR	L1P Memory Protection Fault Address Register
0184A404h	L1PMPFSR	L1P Memory Protection Fault Set Register
0184A408h	L1PMPFCR	L1P Memory Protection Fault Clear Register
0184A640h to 0184A67Ch	L1PMPPA_0 to L1PMPPA_15	L1P Memory Protection Page Attribute Registers
0184AC00h	L1DMPFAR	L1D Memory Protection Fault Address Register
0184AC04h	L1DMPFSR	L1D Memory Protection Fault Set Register
0184AC08h	L1DMPFCR	L1D Memory Protection Fault Clear Register
0184AD00h to 0184AD0Ch	MPLK_0 to MPLK_3	Memory Protection Lock Registers
0184AD10h	MPLKCMD	Memory Protection Lock Command Register
0184AD14h	MPLKSTAT	Memory Protection Lock Status Register
0184AE40h to 0184AE7Ch	L1DMPPA_0 to L1DMPPA_15	L1D Memory Page Protection Attribute Registers

7.2.2 DSP Subsystem Integration

The DSP C66x Corepac integrates the following IPs :

- Improved C66x Core and CGEM Megamodule with ECC
- 32-kB L1P Cache/SRAM
- 32-kB L1D Cache/SRAM
- 384-kB L2 Cache/SRAM
- ECC and EDC wherever supported
- L1P - 4-bit parity per 256-b location (1-b parity per 64-b line quadrant)
- L1D – no protection
- L2 – Distance-3 “detect 2, correct 1” Hamming code based error correction/detection

7.2.2.1 DSP Memory Overview

The L1P 32kB memory and L1D 32kB memory can be independently configured as part cache and part mapped to SRAM. The cache size can be 0KB, 4KB, 8KB, 16KB, or 32KB (where the mapped SRAM size is 32KB minus the cache size).

The L2 memory 384 kB memory can also be configured as part SRAM and part Cache. 128kB is always mapped as SRAM. The remaining 256kB can be configured to cache sizes of 0, 32k, 64k, 128k, or 256kB. The additional mapped SRAM available is 256-kB minus the cache size.

Copyright © 2025 Texas Instruments Incorporated

7.2.2.2 C66x Cache Subsystem

The purpose of this section is to provide an overview of the C66x cache memory architecture and to specify its configuration in this device. Details on the C66x cache functionality can be found in the *TMS320C66x DSP Cache User Guide* (SPRUGY8).

The device contains a 384KB level-2 memory (L2), a 32KB level-1 program memory (L1P), and a 32KB level-1 data memory (L1D). Each memory has a unique location in the memory map (see #unique_91).

After device reset, L1P and L1D cache are configured as all cache, by default. The L1P and L1D cache can be reconfigured via software through the L1PMODE field of the L1P Configuration Register (L1PMODE) and the L1DMODE field of the L1D Configuration Register (L1DCFG) of the C66x CorePac. L1D is a two-way set-associative cache, while L1P is a direct-mapped cache.

7.2.2.2.1 L1P Memory

The L1P memory configuration for this device is as follows:

- Region 0 size is 0K bytes (disabled)
- Region 1 size is 32K bytes with no wait states

Figure 7-82 shows the available SRAM/cache configurations for L1P.

Note

L1P can only be configured as cache.

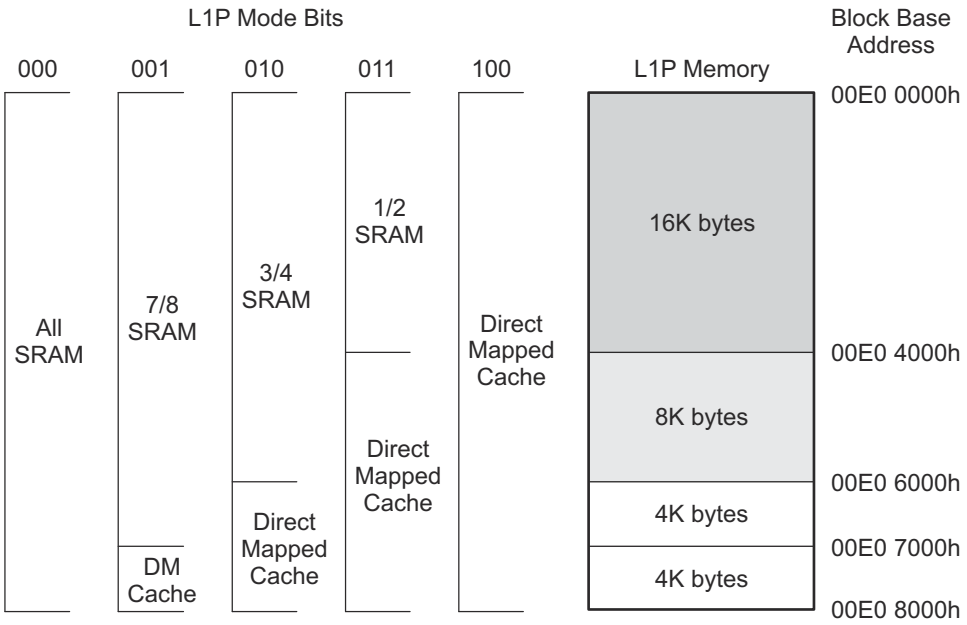

Figure 7-82. L1P Memory Configurations

7.2.2.2.2 L1D Memory

The L1D memory configuration for this device is as follows:

- Region 0 size is 0K bytes (disabled)
- Region 1 size is 32K bytes with no wait states.

Figure 7-83 shows the available SRAM/cache configurations for L1D.

Copyright © 2025 Texas Instruments Incorporated

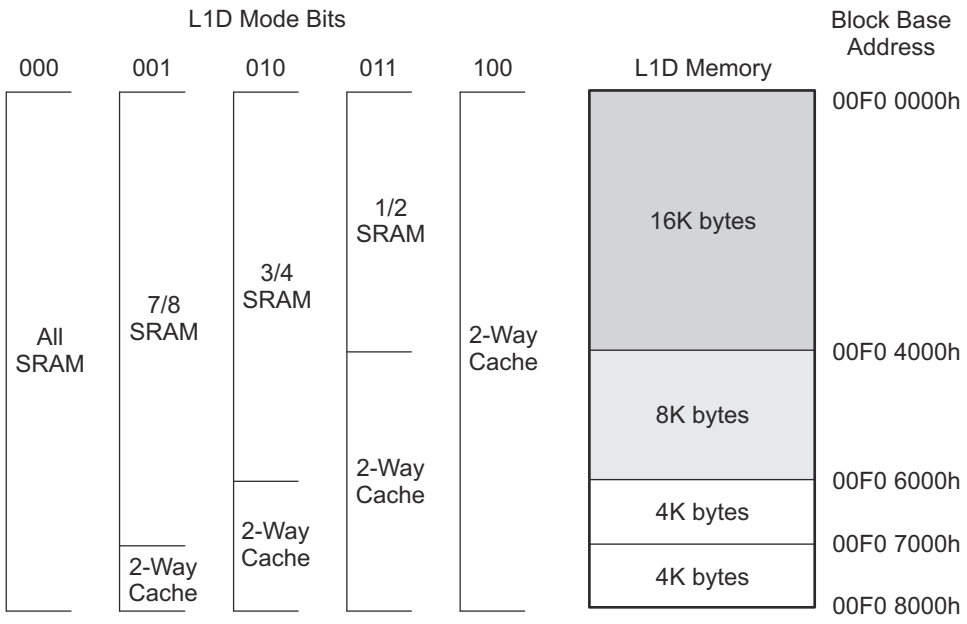

Figure 7-83. L1D Memory Configurations

7.2.2.2.3 L2 Memory

The L2 memory configuration for this device is as follows:

- 384KB of memory
- Local starting address is 0080 0000h.

L2 memory can be configured as all SRAM, all 4-way set-associative cache, or a mix of the two. The amount of L2 memory that is configured as cache is controlled through the L2MODE field of the L2 Configuration Register (L2CFG) of the C66x CorePac. Figure 7-84 shows the available SRAM/cache configurations for L2. By default, L2 is configured as all SRAM after device reset.

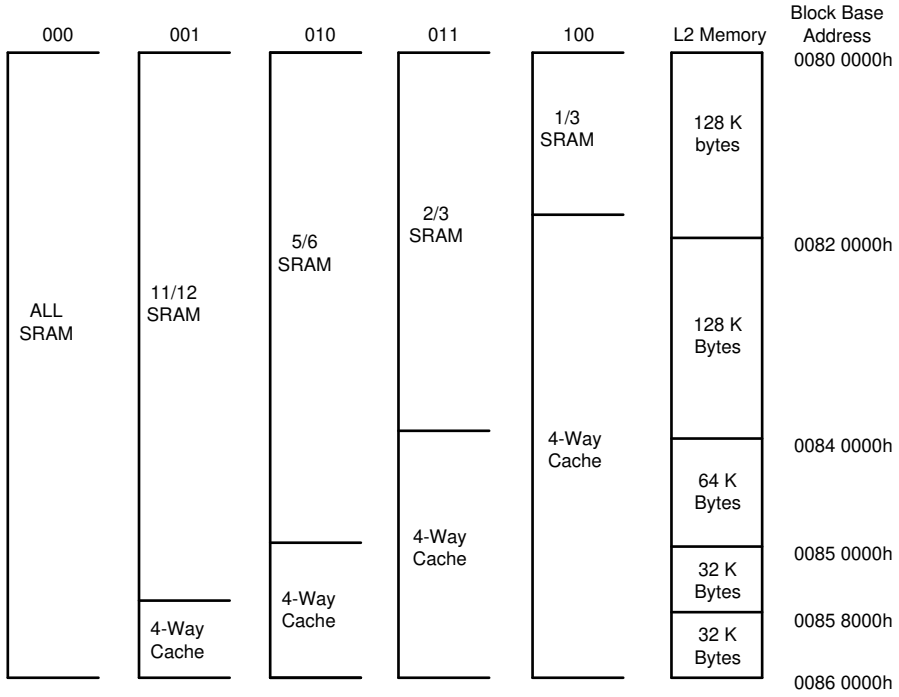

Figure 7-84. L2 Memory Configurations

Copyright © 2025 Texas Instruments Incorporated

7.2.2.2.4 DSP ECC Configuration

The device supports ECC/parity on all DSP internal SRAMs. All the ECC/parity features are enabled by default (that is, after device reset). Software can disable the features per SRAM type if not required.

Table 7-82 summarizes the ECC/parity support in DSP.

Table 7-82. DSP ECC/Parity Support

DSP Memory	ECC/Parity Support
L1P Data RAM	Parity
L1P Tag	Parity
L1D Data RAM	ECC-SECDED (Single Error Correction, Double Error Detection)
L1D Tag	ECC-SECDED
L2 Data RAM	ECC-SECDED
L2 Tag	ECC-SECDED

7.3 Radar Processing Hardware Accelerator

In addition to the DSP cores, the AM273x device incorporates Radar Hardware Accelerators HWA2.0 to offload the DSP from pre-processing computations.

7.3.1 Radar Accelerator Features Overview

- Flexible enough to offload almost all the operations from the initial compensation (DC estimation-correction, interference mitigation, and so forth) on raw ADC data before first dimension FFT until point cloud detection, with the least possible intervention from the DSP.
- Operating clock frequency is 400 MHz
- Data path bit-width of 24-bits (24-bit I, 24-bit Q)
- Input and output data formatter: scaling, truncation, head/tail sample skipping, zero padding/insertion of data, sample access pattern for DDMA use case.
- Capability to do all these operations in a single iteration: DC correction, interference zeroing out, complex multiplication, windowing, FFT, log, magnitude, stats computation with a capability of selecting/enabling or disabling/bypassing each of these computation blocks individually.
- 128KB local buffer/RAM split into eight 16KB banks, with each bank configurable as input or output for any compute/data transfer functionality.
- Flexible data flow and data sample arrangement to support efficient multi-dimensional operations and transpose accesses as required.
- Processing for inline (range FFT) and inter-frame (Doppler FFT, angle FFT, detection) threads simultaneously
- Support for CSI2 data input either in Rx interleaved or in serial manner
- Support for DC estimation and correction
- Support for interference mitigation
  - Estimation and zeroing out of the interference samples by estimating the average of the magniture of sudden spikes of vector elements, and applying scaled values as a threshold.
- Support for complex vector/scalar multiplications
- Support for a synthesizer channel combining and MIMO demodulation for DDMA
- Complex windowing – 2K samples window RAM with a capability to split 1KB ping- 1KB pong to allow programming new coefficients while older ones are used.
- Up to 2K point FFT with efficiency of 1 sample output per cycle and possibility to go higher in size until 4K/8K, with stitching (reduced efficiency).
- Doppler de-rotation of the FFT output
- Support for magnitude (absolute value) and Log-Magnitude computation.
- Nested loop support in PARAM sets
- Compression/decompression engine with block floating and exponential Golomb modes with performance of 1 complex sample processing per cycle
- Detection algorithm-specific accelerators (for example: CFAR CA/OS and other variants)

Copyright © 2025 Texas Instruments Incorporated

- 2D Local Maxima/Peak search algorithm with efficiency of 1 cell processing per cycle
- Lock-step state machine
- ECC on the PARAM RAMs and parity on local buffers

7.3.2 Radar Accelerator Architecture

The Radar accelerator details are covered in Section 7.4, which consists of 2 parts.

The first part covers the high-level architecture and key features such as windowing, FFT, and log-magnitude. The (optional) second part covers additional features such as CFAR, complex multiplication, advanced statistics, radar data compression engine, and so forth.

7.4 Radar Hardware Accelerator 2.0

This chapter describes the Radar Hardware Accelerator architecture, features, and operation of various blocks and their register descriptions. The purpose is to enable the user to understand the capabilities offered by the Radar Hardware Accelerator and to program it appropriately to achieve the desired functionality.

This chapter provides an overview of the overall architecture and features available in the Radar Hardware Accelerator. The main features, such as, windowing, FFT, and log-magnitude are covered in this chapter.

The chapter also covers additional features like CFAR and other advanced usage possibilities, which can be skipped if the user is interested only in the FFT computation capability.

This chapter covers the introduction and high-level architecture, the state machine, trigger mechanisms, input/output formatting, and general framework for using the accelerator. Later sections describe the primary computational unit features, namely, windowing, FFT, and log-magnitude.

7.4.1 Radar Hardware Accelerator – Overview 1364
7.4.2 Accelerator Engine – State Machine 1371
7.4.3 Accelerator Engine – Input Formatter 1378
7.4.4 Accelerator Engine – Output Formatter 1387
7.4.5 Accelerator Engine – Core Computational Unit 1393
7.4.6 Parameter Set Layouts 1404
7.4.7 FFT Engine – Pre-Processing 1407
7.4.8 Core Computational Unit - CFAR Engine 1426
7.4.9 Core Computational Unit – Statistics 1439
7.4.10 Core Computational Unit – Local Maxima Engine 1449
7.4.11 Context Switching 1456
7.4.12 Compression Engine 1460
7.4.13 Radar Hardware Accelerator Registers 1460

Copyright © 2025 Texas Instruments Incorporated

7.4.1 Radar Hardware Accelerator – Overview

This section provides an overview of the Radar Hardware Accelerator 2.0. The section covers the key features of the accelerator and overall architecture.

7.4.1.1 Introduction

The Radar Hardware Accelerator 2.1 is a hardware IP that enables off-loading the burden of certain frequently used computations in FMCW radar signal processing from the main processor. It is well known that FMCW radar signal processing involves the use of FFT and log-magnitude computations to obtain a radar image across the range, velocity, and angle dimensions. Some of the frequently used functions in FMCW radar signal processing can be done within the Radar Hardware Accelerator, while still retaining the flexibility of implementing other proprietary algorithms in the main processor.

7.4.1.2 Key Features

The main features of the Radar Hardware Accelerator 2.1 are as follows.

- Fast FFT computation, with programmable FFT sizes (2, 4, 8…, 2048-pt, and 3, 6, 12, …, 1536-pt) complex FFT.
- Internal FFT bit width of 24 bits (for each I and Q) for good SQNR performance, with fully programmable butterfly scaling at every stage for user flexibility.
- Built-in capabilities for pre-FFT processing – specifically DC estimation and removal, interference localization and mitigation, channel equalization, channel combination, zero insertion, and programmable windowing.
- Magnitude (absolute value) and log-magnitude computation capability.
- Flexible data flow and data sample arrangement to support efficient multidimensional FFT operations and transpose accesses as required.
- Chaining, looping and context switching mechanisms to sequence a set of accelerator operations one-after-another with minimal intervention from the main processor
- CFAR-CA and CFAR-OS detector support (linear and logarithmic), Local Maxima engine
- Statistics including 2D maxima, Histogram and CDF
- Radar data compression / decompression capability
- Miscellaneous other capabilities of the accelerator:
  - Stitching two or four 2K-point FFTs to get the equivalent of 4096-point or 8192-point FFT for industrial level sensing applications where large FFT sizes are required
  - Slow DFT mode, with resolution equivalent to 16K size FFT, for FFT peak interpolation purposes (for example, range interpolation)
  - Complex vector multiplication and Dot product capability for vectors up to 1024 in size

This chapter covers the high-level architecture and key features such as windowing, FFT, and log-magnitude. It also covers additional features such as CFAR, complex multiplication, advanced statistics, radar data compression engine, and so forth.

7.4.1.3 High Level Architecture

The Radar Hardware Accelerator module is loosely coupled to the main processor (eg. C6x DSP). The accelerator is connected to a 128-bit bus that is present in the main processor system, as shown in Figure 7-85.

The Radar Hardware Accelerator module comprises an accelerator engine and four memories, each of 16KB size, which are used to send input data to and pull output data from the accelerator engine. These memories are referred to as *local memories* of the Radar Accelerator (ACCEL_MEM). For convenience, these eight local memories are referred to as ACCEL_MEM0, ACCEL_MEM1, ACCEL_MEM2, ACCEL_MEM3, ACCEL_MEM4, ACCEL_MEM5, ACCEL_MEM6 and ACCEL_MEM7.

Copyright © 2025 Texas Instruments Incorporated

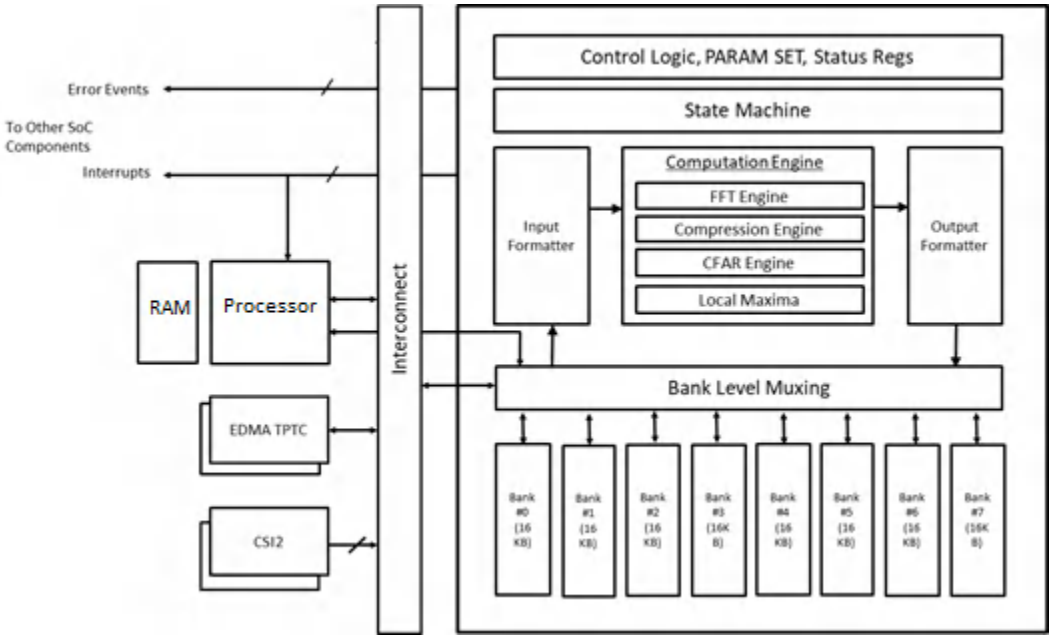

Figure 7-85. Radar Hardware Accelerator

Copyright © 2025 Texas Instruments Incorporated

7.4.1.3.1 High-Level Data Flow

The typical data flow is that the DMA module is used to bring samples (for example, FFT input samples) into the local memories of the Radar Hardware Accelerator, so that the main accelerator engine can access and process these samples. Once the accelerator processing is done, the DMA module reads the output samples from the local memories of the Radar Hardware Accelerator and stores them back in the Radar data memory for further processing by the main processor. The image below demonstrates the flow path discussed.

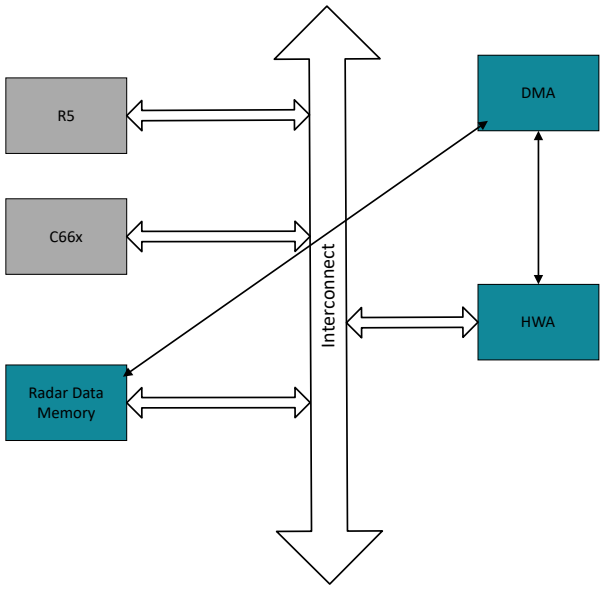

Figure 7-86. High-Level Data Flow

The purpose behind the eight separate local memories (16KB each) inside the Radar Hardware Accelerator is to enable the *ping-pong* mechanism, for both the input and output, such that the DMA write (and read) operations can happen in parallel to the main computational processing of the accelerator. The presence of four memories enables such parallelism. For example, the DMA can be configured to write FFT input samples (ping) into ACCEL_MEM0 and read FFT output samples (ping) from ACCEL_MEM2. At the same time, the accelerator engine can be working on FFT input samples (pong) from ACCEL_MEM1 and writing FFT output samples (pong) into ACCEL_MEM3. However, both the DMA and the accelerator cannot access the same 16KB memory at the same time. This would lead to an error (referto the MEM_ACCESS_ERR_STATUS register description in TBD-Table 3). As will be explained in later sections, the accelerator engine can perform multiple computational steps one after another autonomously. In each step, the input samples are read from one of the eight local memories and the output samples are written into another one of the eight local memories.

Copyright © 2025 Texas Instruments Incorporated

The Radar Hardware Accelerator operates on a single clock domain and the operating clock frequency is 400MHz.

The accelerator local memories are 128-bits wide, for example, each of the 16KB banks is implemented as 1024 words of 128 bits each. This allows the DMA to bring data into the accelerator local memories efficiently (up to a maximum throughput of 128 bits per clock cycle, depending upon the DMA configuration). Two ports for accessing the HWA local memories are available and these map the same 128KB into two different address spaces, thus allowing simultaneous efficient to and from DMA transfers.

It is important to note that any of the eight local memories can be the *source* of the input samples to the accelerator engine and any of the eight local memories can be the *destination* for the output samples from the accelerator engine – with the important restriction that the source and destination memories cannot be the same 16KB bank. Note also that the accelerator local memories do not necessarily need to be used in ping-pong mode and can instead be used as larger 32KB input and output memories, if the use case requires. The address space for the four 16KB memories is contiguous (including a wrap-around form the end of ACCEL_MEM7 to the start of ACCEL_MEM0). Therefore the source as well as destination memory addresses can span beyond 16KB.

7.4.1.3.2 Configuration

The operations of the Radar Hardware Accelerator are configured using registers, which are of two types – *parameter sets* and *common* (common for all parameter sets) registers. The purpose of the parameter sets is to enable a complete sequence of various accelerator operations to be preprogrammed (with appropriate source and destination memory addresses and other configurations specified for each operation in that sequence), such that the accelerator can perform them one after the other, with minimal intervention from the main processor.

The parameter-set register configurations are programmed into a separate 4KB *parameter-set configuration memory*. A state machine built into the accelerator handles the loading of one parameter-set configuration at a time and sequences the preprogrammed operations one after another. This process is further explained in later sections of this user's guide.

7.4.1.4 Accelerator Engine Block Diagram

As previously mentioned, the Radar Hardware Accelerator module consists of eight local memories of 16KB each (ACCEL_MEM) and the main accelerator engine. The accelerator engine has the following five components (as shown in Figure 7-87) – a state machine, input formatter block, output formatter block, core computational unit, and the 4KB parameter-set configuration memory.

Copyright © 2025 Texas Instruments Incorporated

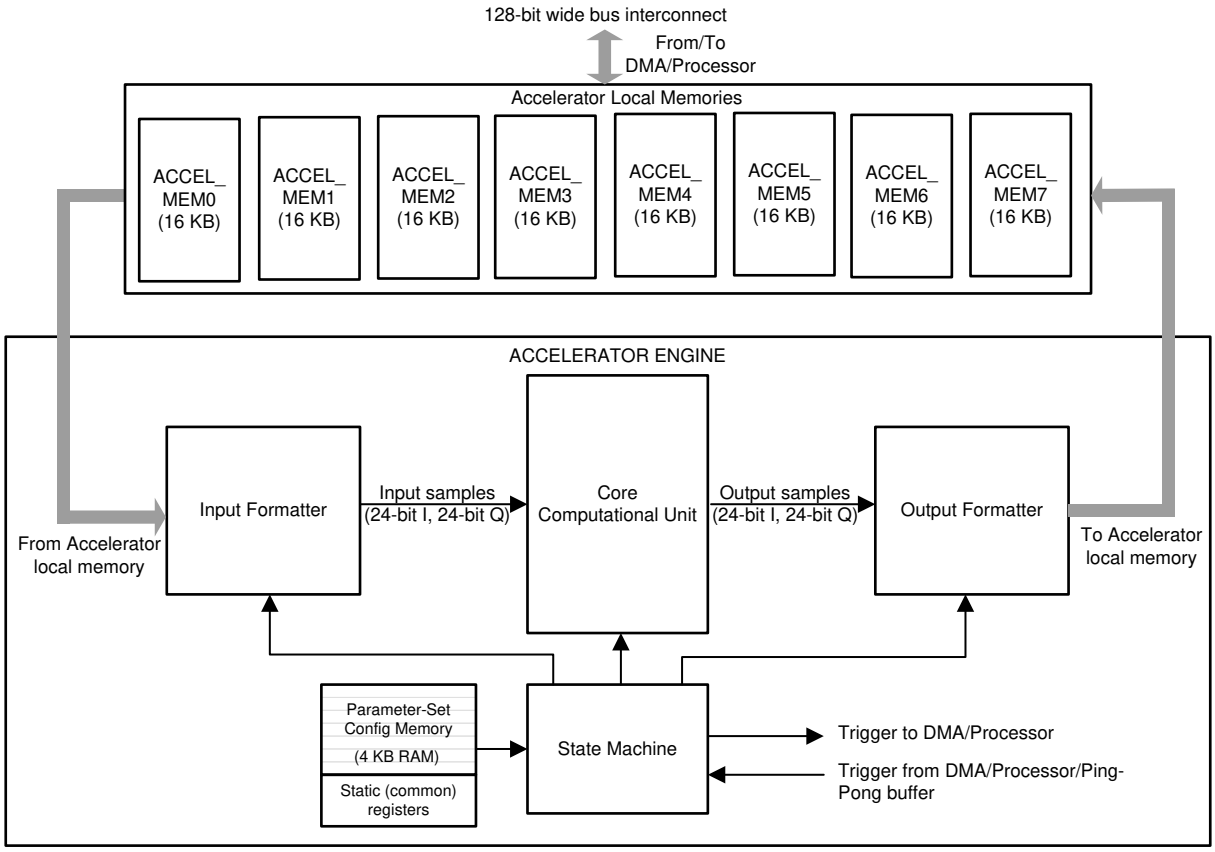

Figure 7-87. Accelerator Engine Block Diagram

The purpose of these components is as follows.

- State machine: the state machine is responsible for controlling the overall operation of the accelerator – specifically, the starting, looping, stopping, as well as triggering and handshake mechanisms between the accelerator, DMA, and main processor. The state machine is also closely connected to the parameter-set configuration memory and takes care of sequencing and chaining a sequence of multiple accelerator operations as programmed in the parameter-set configuration memory.
- Input formatter: the input formatter block is responsible for reading the input samples from any one of the local memories and feeding them into the core computational unit. In this process, this block provides flexible ways of accessing the input samples, in terms of 16-bit versus 32-bit aligned input samples, transpose read-out, flexible scaling, and sign extension to generate internal bit-width of 24 bits, and so on. Lastly the input formatter block provides 24-bit complex samples as input to the core computational unit. The local memory (memories) from which the input formatter reads the input samples is called the *source* memory.
- Output formatter: the output formatter block is responsible for writing the output samples from the core computational unit into the local memories. This block also provides flexible ways of formatting the output samples, in terms of 16-bit versus 32-bit aligned output samples, transpose write, flexible scaling from internal bit-width of 24 bits, to 16-bit or 32-bit aligned output samples, sign-extension, and so on. The local memory (memories) to which the output formatter writes the output samples is called the *destination* memory.
- Core computational unit: the core computational unit contains the main computational logic for various operations, such as windowing, FFT, magnitude, log2, and CFAR calculations. The unit accepts a streaming input from the input formatter block (at the rate of one input sample per clock cycle), performs computations, and produces a streaming output to the output formatter block (typically at the rate of one output sample per clock cycle), with some initial latency depending on the nature of the computations involved.
- Parameter-set configuration memory: this is a 4096-byte RAM that is used to preconfigure the sets of parameters (register settings) for a chained sequence of accelerator operations, which can then be executed

Copyright © 2025 Texas Instruments Incorporated

by the state machine in a loop. This allows the accelerator to perform a preprogrammed sequence of operations in a loop without frequent intervention from the main processor.

Figure 7-88. Parameter-Set Configuration Memory (4KB)

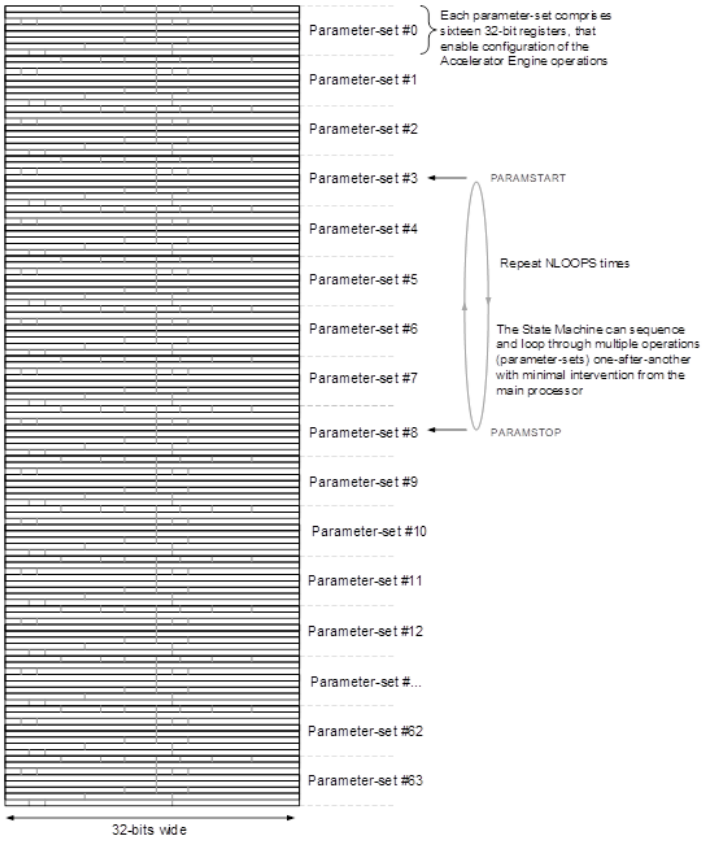

The number of parameter sets that can be preconfigured and sequenced (chained) is 64. This means that up to 64 accelerator operations can be chained together and these can then be looped as well, with minimal intervention from the main processor. For example, operations like FFT, log-magnitude, and CFAR detection can be preconfigured in the parameter-set configuration memory and the state machine can be made to sequence them one after another and run them in a loop for specified number of times. There is a provision available to interrupt the main processor and/or trigger a DMA channel at the end of each parameter set if required. This allows various ways by which the accelerator, DMA, and the main processor can work together to establish a data and processing flow. As shown in Figure 7-88, each parameter set contains the equivalent of sixteen 32-bit registers, which corresponds to total RAM size of 64 ×16 × 32 bits = 4KB for the parameter-set configuration memory.

The layout of the parameter-set register map is provided in Section 7.4.6. Note that the parameter-set RAM must be programmed using 32-bit word writes only (i.e., byte-writes and half-word writes are not supported). The detailed descriptions of the registers is provided in the various sections, as and when the functionality of each component is presented.

Typically, all necessary parameter sets can be pre-configured before triggering execution by the accelerator. If needed, the parameter sets can be modified on-the-fly but without modifying the parameter set being executed at that time. If parameter sets are being overwritten after execution, it is recommended to re-program all the fields for particular set, i.e., avoid partial over-writing.

7.4.1.5 Accelerator Engine Operation

The accelerator engine and the local memories run on a single clock domain. The overall operation of the accelerator can be summarized as follows. The accelerator engine is configured by the main processor through

Copyright © 2025 Texas Instruments Incorporated

common configuration registers (common for all parameter sets), as well as the parameter-set configuration memory. As explained earlier, the former comprises common register settings for overall control of the accelerator engine, and the latter comprises the 64 parameter-set specific settings which control the functioning of the accelerator for each of its *chained* sequence of operations.

When the accelerator engine is enabled, the state machine kicks off and controls the overall operation of the accelerator, which involves loading the parameter sets one at a time from the parameter-set configuration memory into various internal registers of the accelerator engine and running the accelerator as per the programmed configuration for each parameter set one after another. The entire procedure then repeats in a loop for a programmed number of times (NUMLOOPS described later).

Each parameter set includes various configuration details such as the accelerator mode of operation (FFT, Log2, and so on), the source memory address, number of samples, the destination memory address, input formatting, output formatting, trigger mode for controlling the start of computations to ensure proper handshake with the DMA, and so on.

7.4.1.5.1 Data Throughput

Once the state machine has loaded the registers corresponding to the current parameter set to be executed, the data flow happens as follows: at each clock cycle, one sample from the source memory is read by the input formatter and fed into the core computational unit with appropriate scaling and formatting as configured. The data interface between the input formatter and the core computational unit is a 24-bit complex bus (24-bit for each I and Q) which streams one input sample every clock cycle. The core computational unit processes this streaming sequence of input samples and in general, produces a streaming output also at one sample every clock cycle, after an initial latency period. Thus for most operations (FFT, log-magnitude, CFAR, and so on), in steady state the core computational unit maintains a streaming data rate of one sample per clock cycle. The data interface between the core computational unit and the output formatter is also a 24-bit complex bus (24-bit for each I and Q) and the output formatter is responsible for writing into the destination memory, with appropriate scaling and formatting as configured.

The next section provides more details regarding the state machine, including its detailed operation, registers, trigger mechanisms, and so on.

Copyright © 2025 Texas Instruments Incorporated

7.4.2 Accelerator Engine – State Machine

This section describes the state machine block present in the accelerator engine (see Figure 7-89). This block, together with the input formatter and output formatter blocks described in the next two sections, provides the overall framework for establishing the data flow and using the accelerator for various computations.

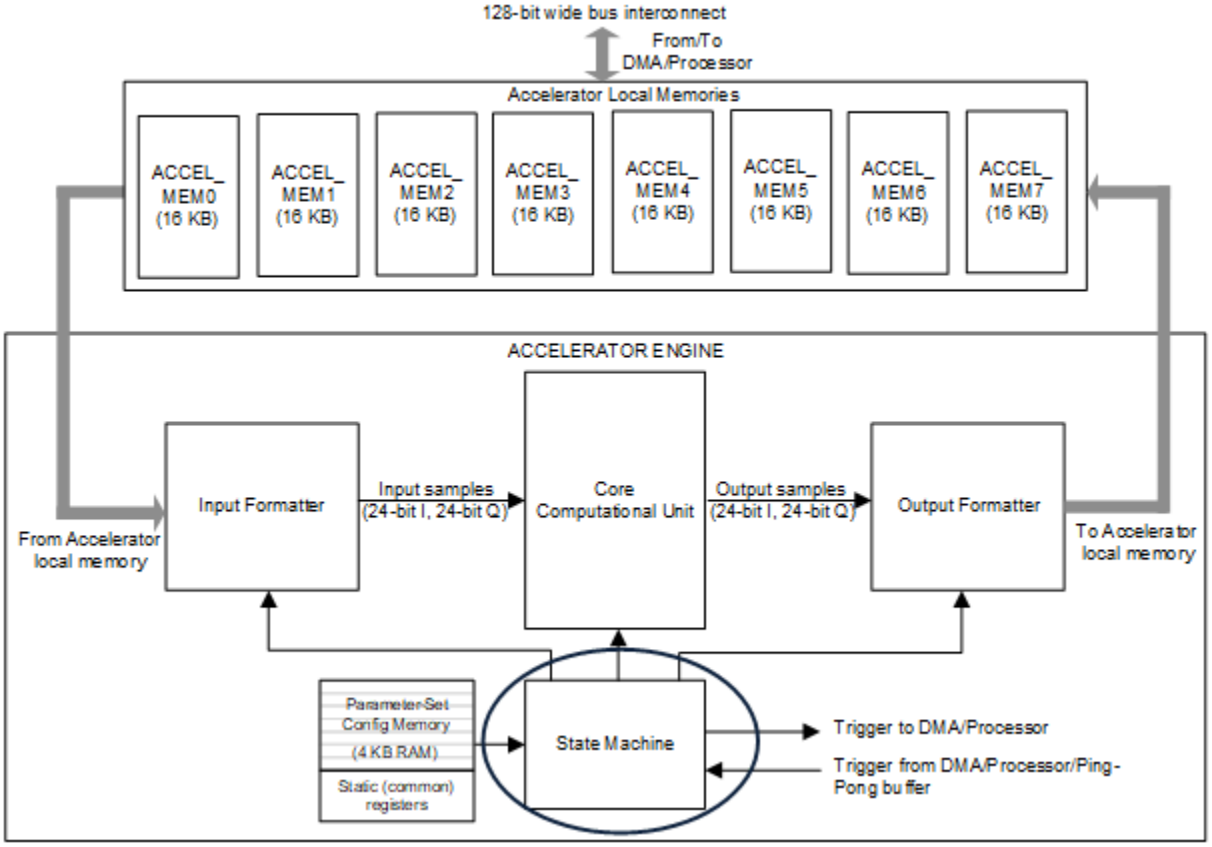

Figure 7-89. State Machine

7.4.2.1 State Machine

The state machine controls the overall functioning of the Radar Hardware Accelerator. The state machine controls the enabling and disabling of the accelerator, as well as supports sequencing an entire set of operations (configured using parameter-set configuration memory), and looping through those operations one after another without needing frequent intervention from the main processor.

7.4.2.1.1 State Machine – Operation

The state machine block and the entire accelerator remain in reset and disabled state by default. The state machine (and hence the accelerator in general) is enabled by setting the HWA_CLK_EN register bit, followed by writing 111b into the HWA_EN register.

Note that a complete list of registers pertaining to the state machine is provided in Section 7.4.2.1.4. Some of the registers are common (common for all parameter sets) registers, whereas some other registers are parameter-set registers, which as explained in the previous section means that they can be uniquely programmed for each of the 64 parameter sets. For each register, Table 7-83 lists whether it is part of the parameter set or not. Table 7-83 also provides a brief description of each register.

When enabled, the state machine steps through (one after another) the parameter sets programmed in the parameter-set configuration memory and executes the computations as per the configuration of each parameter set. The registers PARAM_START_IDX andPARAM_END_IDX define the starting index and ending index within

Copyright © 2025 Texas Instruments Incorporated

the 64 parameter sets, so that only those parameter sets between the start and end indices are executed by the accelerator, as shown in TBD. The state machine also loops through these parameter sets for a total of NUMLOOPS times (unless NUMLOOPS is programmed as 0 or 4095, in which case the loop does not run or runs infinite times respectively). As an example, if the state machine needs to be configured to run the first four parameter sets in a loop 64 times, then the registers should be programmed as follows: PARAM_START_IDX =0, PARAM_END_IDX = 3, and NUMLOOPS = 64.

For each parameter set, there is a TRIGMODE register, which is used to control when the state machine starts executing the computations for that parameter set. This control is useful, for example, to ensure that the input data is ready in the accelerator local memory (source memory) before the computations are started. Specifically, it is possible to trigger the start of computations after completion of a DMA transfer, or after a CSI2 line is received, and so on. The TRIGMODE register setting thus controls when the accelerator operation is triggered for the current parameter set and there are four trigger mechanisms supported as listed in the next subsection. Once triggered, the state machine loads all the registers from the parameter-set configuration memory for the current parameter set into corresponding internal registers of the accelerator and starts the actual computations for that parameter set. After completion of computations of the current parameter set, it moves to the next parameter set. . In general, once the parameter set registers are configured and the state machine is enabled, it is recommended to avoid dynamically changing any of the register values. In particular, note that the loading of parameter set (N+1)'s registers happens soon after the completion of parameter set N's execution, and this loading can happen even while the state machine is waiting for the parameter set (N+1)'s trigger to arrive. This means that parameter set configuration registers of parameter set (N+1) cannot be reliably changed while parameter set N is already executing.

After a sequence of operations as programmed in the parameter set(s) for the specified number of loops is complete, the accelerator provides a completion interrupt (DSS_HWA_THREAD1_LOOP_INT) to the processor. The accelerator can be reconfigured as desired. For reconfiguration, the following procedure must be followed. The accelerator must be disabled by writing 000b to the HWA_EN register. Then, a reset must be asserted by writing 111b followed by 000b to the HWA_RESET register. The new configurations can now be written in to the accelerator, and then the accelerator can be enabled again by writing 111b to HWA_EN. Note that any spare/reserved bits should be kept as 0.

7.4.2.1.2 State Machine – Trigger Mechanisms (Incoming)

As mentioned in the previous subsection, for each parameter set, the start of the computations can be triggered based on specific events. Four trigger mechanisms are supported as follows.

- Immediate trigger (TRIGMODE = 000b): In this case, the state machine does not wait for any trigger and starts the accelerator computations immediately for the current parameter set. This mode is applicable when chaining (sequencing) a set of operations one after another in the accelerator without any need for control handshake or data exchange outside the accelerator (for example, when chaining FFT and log-magnitude operations) with no need to wait for a trigger in between.
- Wait for processor-based software trigger (TRIGMODE = 001b, TRIGMODE = 111b): This is a software-triggered mode that is useful when the main processor must directly control the data flow and start or stop of accelerator computations. In this trigger mode, the state machine waits for a software-based trigger, which involves the main processor setting a separate self-clearing bit in a FW2HWA_TRIGGER_0 or FW2HWA_TRIGGER_1 register (single-bit register). The state machine keeps monitoring that register bit and waits as long as the value is zero. When the value becomes 1 (set), the state machine gets triggered to start the accelerator operations for the current parameter set. FW2HWA_TRIGGER_0 register bit corresponds to TRIGMODE = 001b and FW2HWA_TRG_1 corresponds to TRIGMODE = 111b.
- TRIGMODE= 010b : mode is reserved.
- Wait for the DMA-based trigger (TRIGMODE = 011b): This trigger mode is useful when a DMA transfer completion must be used to trigger the start of the accelerator computations for the current parameter set. The primary purpose of this trigger mode is as follows; when performing second dimension FFT, the DMA is used to bring the FFT input samples from the Radar data memory to the local memory of the accelerator. Upon completion of each DMA transfer, it is useful to automatically trigger the accelerator to perform the FFT.

Copyright © 2025 Texas Instruments Incorporated

To achieve this, the state machine of the accelerator has a 32-bit register called the DMA2HWA_TRIGGER register, where each register bit maps to one of 32 DMA channels that are associated with the accelerator. To use the DMA-based trigger mode, the HWA_TRIGSRCregister in the current parameter set must be programmed to the DMA channel whose completion we wish to monitor. The state machine then monitors the corresponding register bit in the DMA2HWA_TRIGGER register, and triggers the execution of the current parameter set only when that register bit gets set. For e.g. if HWA_TRIGSRC is programmed to 5, then the current parameter set will execute only once the register bit #5 gets set in DMA2HWA_TRIGGER.

The user may utilize the EDMA's linking capability to set the appropriate register bit in DMA2HWA_TRIGGER. Linking is a programmable feature of the EDMA, where the completion of a DMA transfer can automatically trigger a second DMA transfer. In the present context, the DMA transfer that moves data to the local memory of the accelerator can be linked to a second DMA whose purpose is to write a one-hot signature into DMA2HWA_TRIGGER to set a specific register bit and trigger the accelerator. Note that there are 32 read-only, one-hot, signature registers (SIG_DMACH1_DONE, SIG_DMACH2_DONE, and more) that are available. These registers are simply read-only registers which contain hard-coded values (each register is a one-hot signature – 0x0001, 0x0002, 0x0004, 0x0008, and so on). For convenience, these hard-coded 32 read-only signatures can be used, so that the second DMA can simply copy from one of these SIG_DMACHx_DONE registers into the DMA2HWA_TRIGGER register to set the appropriate register bit.

In case of multiple DMA triggers waiting on multiple HWA paramset operation, each time the DMA transfer is completed, the corresponding one-hot signature is copied to DMA2HWA_TRIGGER (self-clearing bit) register and this value gets internally latched and is serviced only on DMA transfer completion. For example, assume there are two parallel DMA's (DMA-0 and DMA-1) which are about to trigger paramset-0 and paramset-1 respectively. So in this case even if DMA-1 completes transfer first, the HWA will only start execution once DMA-0 is over and also note that DMA2HWA_TRIGGER register is not overwritten but the values get internally latched as mentioned above.

- Wait for hardware trigger (TRIGMODE = 0b100): These trigger modes are useful when a hardware signal such as CSI interrupt needs to be used to trigger the start of the accelerator computations for the current parameter set. The hardware trigger sources can be either CSI #1 frame start, CSI #1 lineend, or CSI #2 frame start, or CSI #2 line end. The HWA_TRIG_SRC register in the parameter-set decides which of these trigger sources is selected. . The valid range for HWA_TRIG_SRC register is 0 to 19, and these values correspond to different trigger sources – specifically, a value of 0 selects the right most trigger and 19 selects left most trigger in the following trigger sources: RCSS_CSI2A_SOF_INT[0,1] RCSS_CSI2A_EOL_CNTX[0..7]_INT, RCSS_CSI2B_SOF_INT[0,1], RCSS_CSI2B_EOL_CNTX[0..7]_INT. Please refer to the device TRM for more details.

7.4.2.1.3 State Machine – Trigger Mechanisms (Outgoing)

After the accelerator computations for the current parameter set are triggered (using one of the four incoming trigger mechanisms mentioned in the previous subsection), it performs the actual computation operations for that parameter set. These computations typically take several tens or hundreds of clock cycles, depending on the nature of the configuration programmed. Once the accelerator completes its computation operations for the current parameter set, the state machine advances to the next parameter set and repeats the same process. But before advancing to the next parameter set, it can interrupt the main processor and/or trigger a DMA channel. This provision is useful if the main processor is required to read or write registers or memory locations at the end of the current parameter set. Also, this provision is useful for triggering a DMA channel, so that the output of the accelerator can be copied out of the accelerator local memories.

There are two trigger mechanisms provided as follows:

- Interrupt(s) to main processor (CPU_INTR1_EN = 1, CPU_INTR2_EN = 1): The accelerator interrupts the main processor(s) at the end of completion of computations for the current parameter set, if the register bit CPU_INTR1_EN or CPU_INTR2_EN is set. Two interrupt signals are available and they are enabled or disabled for each parameter-set by these two register bits. Setting CPU_INTR1_EN in a parameter-set enables DSS_HWA_PARAM_DONE_INTR1 interrupt to be generated at the end of that parameter-set. Setting CPU_INTR2_EN in a parameter-set enables DSS_HWA_PARAM_DONE_INTR2 interrupt to be generated at the end of that parameter-set.

Copyright © 2025 Texas Instruments Incorporated

- Trigger to DMA (DMATRIG_DMATRIG_ENEN = 1): The accelerator gives a trigger to a DMA channel at the end of completion of computations for the current parameter set, if the register bit DMATRIG_EN is set. If DMATRIG_EN is set, then the particular DMA channel as specified in a separate HWA2DMA_TRIGDST register (valid values are 0 to 31, for the 32 DMA channels dedicated for the accelerator) is triggered. Thus, it is possible to preconfigure up to 32 DMA channels and trigger the appropriate one at the end of the computations of the current parameter set. The trigger from accelerator to the DMA channels can also be emulated by the processor, by writing to a FW2DMA_TRIGGER register. This can be used by the processor to kick-start a full/repetitive chain of operations, that are then subsequently managed between the DMA and the accelerator without further processor involvement – for example, the processor writes to the FW2DMA_TRIGGER register to trigger a DMA channel for the first time, and this kicks off a series of back-to-back data transfers and accelerator computations, with the DMA and accelerator hand-shaking with each other.

7.4.2.1.4 State Machine – Register Descriptions

Table 7-83 lists all the registers of the state machine block. As explained previously, some of the registers are common (common for all parameter sets) registers, whereas some others are *part of each parameter set*. For each register, this distinction is captured as part of the register description in Table 7-83.

Table 7-83. State Machine Registers

Register.Field	Width	Parameter Set	Description
HWA_ENABLE.hwa_en	3	No	Enable and Disable Control: This register enables or disables the entire Radar Hardware Accelerator. The reason for a 3-bit register (instead of 1-bit) is to avoid an accidental bit-flip (for example, transient error caused by a neutron strike) from unintentionally turning on the accelerator engine. A value of HWA_EN = 111b enables the Radar Hardware Accelerator and any other value of the register keeps the accelerator engine in disabled state.
HWA_ENABLE.hwa_clk_en	3	No	Clock-gating Control: This register bit controls the enable/ disable for the clock of the Radar Accelerator. This register bit can be set to 0 to clock-gate the accelerator when not using the accelerator. Before enabling the accelerator or before configuring the accelerator's registers, this register bit should be set first, so that the clock is available.
HWA_ENABLE.hwa_reset	3	No	Software Reset Control: This register provides software reset control for the Radar Hardware Accelerator. The assertion of these register bits by the main processor will bring the accelerator engine to a known reset state. This is mostly applicable for resetting the accelerator in case of unexpected behavior. Under normal circumstances, it is expected that whenever the accelerator is enabled (from disabled state), it always comes up in a known reset state automatically. The recommended sequence to be followed in case software reset is desired is to write 111b to this register and then a 000b, before the clock is enabled to the accelerator.
PARAM_RAM_LOOP.numloops	12	No	Number of loops: This register controls the number of times the state machine will loop through the parameter sets (from a programmed start index till a programmed end index) and run them. The maximum number of times the loop can be made is run is 4094. A value of 4095 (0xFFF) programmed in this register should be considered as a special case and it should be interpreted as an infinite loop mode, for example, keep looping and never stop the accelerator engine unless reset by the main processor. A value of zero programmed in this register means that the looping mechanism is disabled. In this case, the accelerator engine can still be used under direct control of the main processor (without the state machine looping provision coming into the picture).

Copyright © 2025 Texas Instruments Incorporated

Table 7-83. State Machine Registers (continued)

PARAM_RAM_IDX. param_start_idx	4	No	Parameter-set Start Index: These registers are used to control the start and stop index of the parameter set through which the state machine loops through. The state machine starts at the parameter set specified by PARAM_START_IDX and loads each parameter set one after another and runs the accelerator as per that configuration. When the state machine reaches the parameter set specified by PARAM_END_IDX, it loops back to the start index as specified by PARAM_START_IDX.
PARAM_RAM_IDX. param_end_idx	4	No	Parameter-set Stop Index: Refer register description for PARAM_START_IDX
HWA_ENABLE. hwa_dyn_clk_en	1	No	Dynamic Clock-gating Control: Setting this register bit to '1' enables the capability to clock gate the unused computation engines (i.e., from the four computation engines, namely FFT, CFAR, Memory compression, Local Maxima) to save power consumption, based on the specific parameter-set being executed.
TRIGMODE	4	Yes	Trigger mode select: 0000b – Immediate trigger 0001b – Software trigger 0010b – Reserved 0011b – DMA-based trigger 0100b – Hardware based trigger 0101b – Reserved 0110b – Reserved 0111b – M4 Micro-controller based trigger (equivalent to software trigger, differentiating trigger source between external and HWA CPU.
FW2HWA_TRIG_0.fw2hwa_trigger_0	1	No	Software trigger bit: This register bit is relevant whenever software triggered mode is used (TRIGMODE = 001b). Whenever this software triggered mode is configured for a parameter set, the state machine keeps monitoring this register bit and waits as long as the value is zero. The main processor software can set this register bit, so that the state machine gets triggered and starts the accelerator operations for that parameter set.
FW2HWA_TRIG_1.fw2hwa_trigger_1	1	No	Software trigger bit: This register bit is similar to FW2HWA_TRIGGER_0, except that this register bit corresponds to TRIGMODE = 111b.
DMA2HWA_TRIG.dma2hwa_trigger	32	No	DMA trigger register: This register is relevant whenever DMA triggered mode is used (for example, TRIGMODE = 011b). Whenever a DMA channel has finished copying input samples into the local memory of the accelerator and wants to trigger the accelerator, the procedure to follow is to use a second linked DMA channel to write a 32-bit one-hot signature into this register to trigger the accelerator. In DMA triggered mode, the state machine keeps monitoring this 32-bit register and waits as long as a specific bit (see DMA2HWA_TRIGSRC) in this register is zero. The second linked DMA channel writes a one-hot signature that sets the specific bit, so that the state machine gets triggered and starts the accelerator operations for that parameter set.
DMA2HWA_TRIGSRC	5	Yes	DMA channel select for DMA completion trigger: This parameter-set register is relevant whenever DMA triggered mode is used (for example, TRIGMODE = 011b). This register selects the bit number in DMA2HWA_TRIGGER for the state machine to monitor to trigger the operation for that parameter set.

Copyright © 2025 Texas Instruments Incorporated

Table 7-83. State Machine Registers (continued)

CPU_INTR1_EN	1	Yes	Completion interrupt to main processor: This parameter-set register is used to enable/disable interrupt to the main processor upon completion of the accelerator operation for that parameter set. If enabled, the main processor receives an interrupt from the Radar Hardware Accelerator at the end of operations for that parameter set, so that the main processor can take any necessary action. Two interrupts are available, and this register bit enables or disables the first interrupt.
CPU_INTR2_EN	1	Yes	Completion interrupt to main processor: Similar to CPU_INTR1_EN. This register bit enables or disables the second interrupt to the main processor.
PARAM_DONE_SET_STATUS_0 . param_done_set_status_0 PARAM_DONE_SET_STATUS_1. param_done_set_status_1	32	No	Parameter-set done status: These read-only status registers can be used by the main processor to see which parameter sets are complete that led to the interrupt to the main processor. The individual bits in these 32-bit status register indicate which of the 64 parameter sets have completed. These status bits are not automatically cleared, but they can be individually cleared by writing to another set of 32-bit registers (PARAM_DONE_STATUS_CLR)
PARAM_DONE_STATUS_CLR_0 PARAM_DONE_STATUS_CLR_1	32	No	Refer register description for PARAM_DONE_SET_STATUS
DMATRIG_EN	1	Yes	Completion trigger to DMA: This parameter-set register is used to enable DMA channel trigger upon completion of the accelerator operation for that parameter set. This trigger mechanism enables the accelerator to hand-shake with the DMA so that output data samples are copied out of the accelerator local memory. If enabled, the accelerator triggers a specified DMA channel, so that the output samples can be shipped from the local memory to Radar data memory.
HWA2DMA_TRIGDST	5	Yes	DMA channel select for accelerator completion trigger: This parameter-set register is used to select which of the 32 DMA channels allocated to the accelerator should be triggered upon completion of the accelerator operation for that parameter set. This register is to be used in conjunction with DMATRIG_EN.
FW2DMA_TRIGGER. fw2dma_trigger	32	No	Trigger from processor to DMA: This register can be used by the processor to trigger a DMA channel for the first time, so that a full sequence of repeated operations between the DMA and the accelerator gets kick-started.
PARAMADDR.paramaddr	6	No	Debug register for current parameter-set index: This read-only status register indicates the index of the current parameter set that is under execution. This is useful for debug, where parameter sets can be executed in single-step manner (one-by-one) using SW trigger mode for each of them. In such a debug, this register indicates which parameter set is currently waiting for the SW trigger.
LOOP_CNT.loop_cnt	12	No	Debug register for current loop count: This read-only status register indicates what is the loop count that is presently running. When the state machine is programmed for NUMLOOPS loops, this register shows the current loop count that is running.
TRIGGER_SET_STATUS_0. Trigger_set_status_0	32	No	Debug register for trigger status: This is a read-only status register, which indicates the trigger status of the accelerator, for example, whether a DMA trigger was ever received (refer TRIGMODE). The 32 bits in this register correspond to the 32 DMA trigger bits (refer DMA2HWA_TRIGGER).
TRIGGER_SET_STATUS_1. Trigger_set_status_1	32	No	Debug register for trigger status: This is a read-only status register, which indicates the trigger status of the accelerator, for example, whether a specific hardware trigger or software trigger or context switch trigger has even been received.

Copyright © 2025 Texas Instruments Incorporated

Table 7-83. State Machine Registers (continued)

TRIGGER_SET_IN_CLR_0. Trigger_set_in_clr_0	1	No	Clear trigger status read-only register: This register-bit when set clears the trigger status register TRIGGER_SET_STATUS_0 described above.
TRIGGER_SET_IN_CLR_1 Trigger_set_in_clr_1	1	No	Clear trigger status read-only register: This register-bit when set clears the trigger status register TRIGGER_SET_STATUS_1 described above.
FORCED_CONTEXTSW_EN	**1**	Yes	Force context switch: This register bit is useful in Context Switching. If this bit is set, the state machine switches the context to other thread after the completion of the current parameter-set. Refer the Context Switching section 28.11 of TRM for details.
CONTEXTSW_EN	1	Yes	Enable context switch: This register bit is useful in Context Switching. If this bit is set, the state machine is allowed to switch context at the end of execution of this parameter-set. Refer the Context Switching section 28.11 of TRM for details
PARAM_RAM_IDX_ALT.param_start_idx	10	No	Refer Context Switching section in section 28.11 of TRM
PARAM_RAM_IDX_ALT.param_end_idx	10	No	Refer Context Switching section in section 28.11 of TRM
PARAM_RAM_IDX_ALT.numloops	12	No	Refer Context Switching section in section 28.11 of TRM

The next two sections cover the Input Formatter and Output Formatter blocks, including their detailed operation, registers and usage procedure.

Copyright © 2025 Texas Instruments Incorporated

7.4.3 Accelerator Engine – Input Formatter

This section describes the input formatter block present in the accelerator engine (see Figure 7-90).

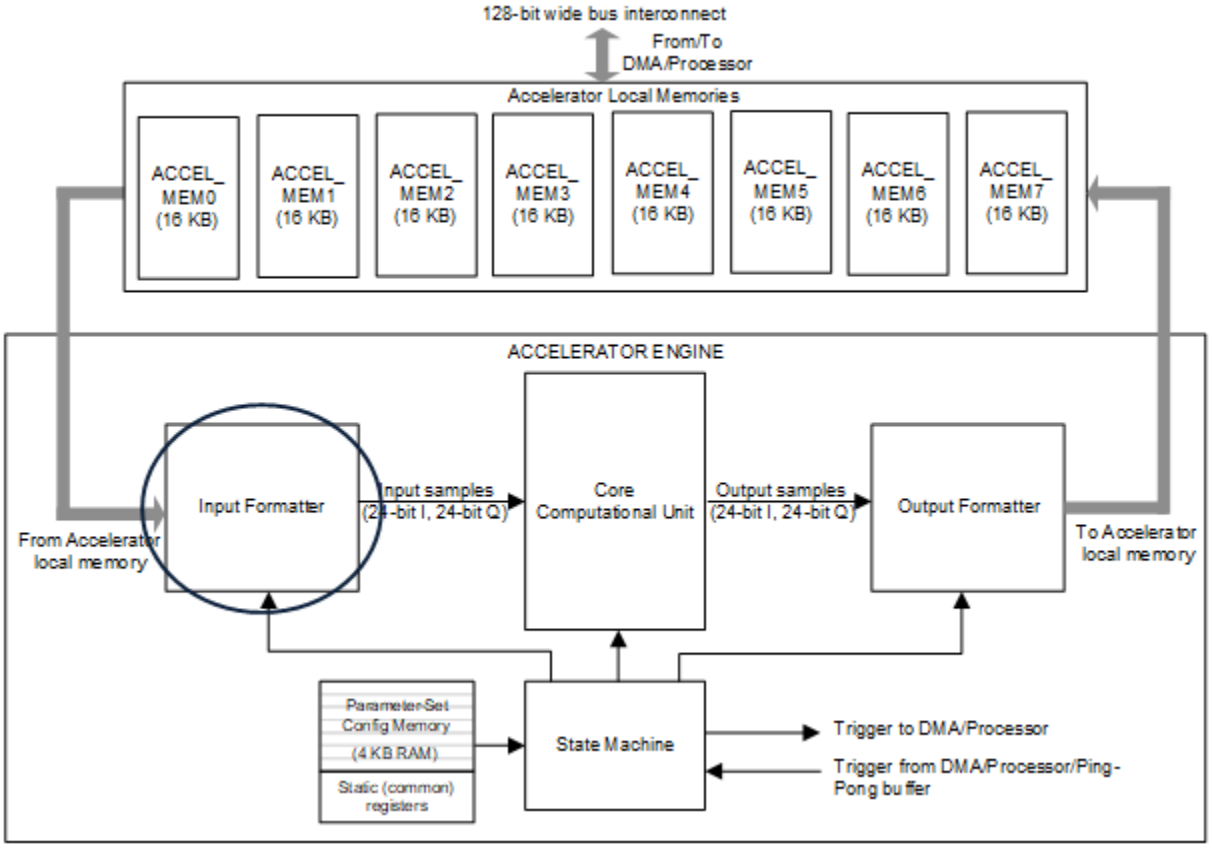

Figure 7-90. Input Formatter

7.4.3.1 Input Formatter

The input formatter is used to access, format, and feed the data from the local memories of the accelerator as 24-bit I and 24-bit Q samples into the core computational unit. The input formatter provides various capabilities to access and format the samples from the local memories – especially, various multidimensional access patterns (for example transpose access), 16-bit or 32-bit aligned word access, scaling using bit-shifts to generate 24-bit wide samples from 16-bit or 32-bit words, real versus complex input, sign extension, conjugation, and more.

7.4.3.1.1 Input Formatter – Operation

The input formatter block is responsible for reading the input samples from the accelerator local memory and feeding them into the core computational unit (see Figure 7-90). The data flow from the input formatter, through the core computational unit, to the output formatter is designed to sustain a steady-state throughput of one complex sample per clock cycle. The input formatter thus feeds one sample (24-bit I and 24-bit Q) into the core computational unit every clock cycle.

To make the best use of the capabilities of the core computational unit and to allow meaningful chaining of radar signal processing operations with minimal intervention from the processor, the input formatter supports flexibility in how the input samples are accessed from the memory and how they are formatted and fed into the core computational unit.

The memory from which the input formatter picks up the data is referred to as *source memory*. Note that any of the eight accelerator local memories can be the source memory. However, as will be described in a subsequent

Copyright © 2025 Texas Instruments Incorporated

section, there is an important restriction which explains that the source memory cannot be the same as the destination memory (which is the memory to which the output formatter writes the output data).

7.4.3.1.2 Input Formatter – 2D Indexed Addressing for Source Memory Access

The parameter-set register SRCADDR specifies the start address at which the input samples must be accessed. This register is a byte-address, and a value of 0x00000 corresponds to the first memory location of ACCEL_MEM0 memory. The SRCADDR register maps to the entire 128 KB address space of the eight accelerator local memories (8x16KB). Note that even though SRCADDR register is a 20-bit register, only the 17 LSB bits are used. The 3 MSB bits are reserved for future extension purpose.

The input data can be read from the memory as either 16-bit wide samples or 32-bit wide samples. Also, they can be read as real samples or complex samples. These two aspects are configured using register bits SRC16b32b and SRCREAL. See Section 7.4.3.1.5 for a description of these and other registers pertaining to the input formatter block. As an example, if SRC16b32b = 0 and SRCREAL = 0, then the input samples are read from the memory as 16-bit complex samples (16-bit I and 16-bit Q), shown in Figure 7-91.

An important feature of the input formatter block is that it supports flexible access pattern to fetch data from the source memory, which makes it convenient when the data corresponding to multiple RX channels are interleaved or when performing multi-dimensional (FFT) processing. This feature is facilitated through the SRCAINDX, SRCACNT, SRCBINDX, and BCNT registers, which are part of each parameter-set configuration.

The register SRCAINDX specifies how many bytes separate successive samples to be fetched from the source memory and the register SRCACNT specifies how many samples need to be fetched per iteration. An iteration is typically one computational routine, such as one FFT operation. It is possible to perform multiple iterations back-to-back – for example, four FFT operations corresponding to four RX channels. The register SRCBINDX specifies how many bytes separate the start of input samples for successive iterations and BCNT specifies how many iterations to perform back-to-back. These registers can be better understood using the example given in Figure 7-91.

Copyright © 2025 Texas Instruments Incorporated

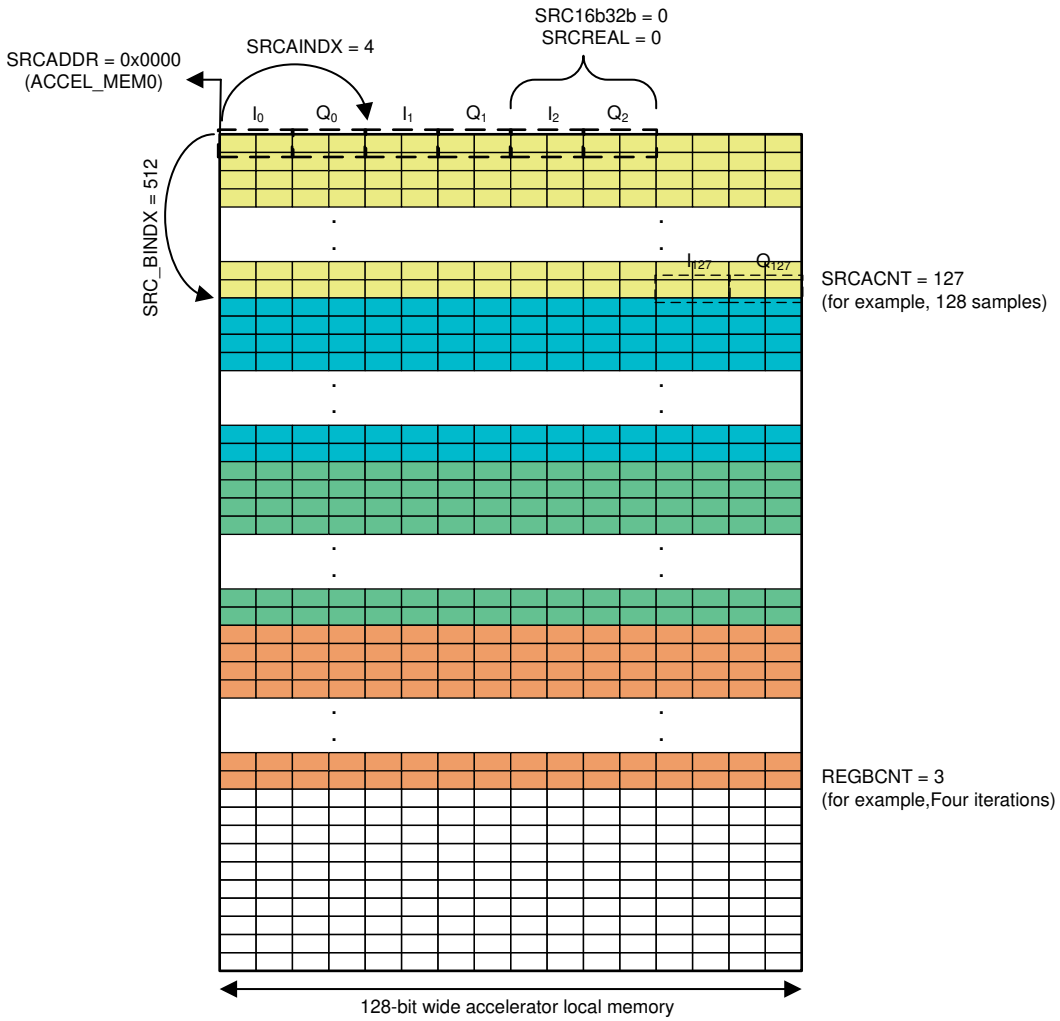

Figure 7-91. Input Formatter Source Memory Access Pattern (Example)

In Figure 7-91, the input data consists of complex data (16-bit I and 16-bit Q) that is contiguously present in ACCEL_MEM0. The data in memory consists of four sets of 128 samples each (say, corresponding to four RX antennas) and these are shown in four different colors. Because each sample occupies 4 bytes and the samples are contiguously placed in the memory starting at the beginning of ACCEL_MEM0, values of SRCADDR = 0x0000 and SRCAINDX = 4 are used to fetch these samples.

In each clock cycle, the input formatter fetches one complex sample from the memory and feeds it into the core computational unit (with appropriate scaling, as described later). Because there are 128 samples to be fed for the first iteration (computational routine), a value of SRCACNT = 127 is used. For the second iteration, the samples are fetched starting from a memory location that is SRCBINDX (=128 × 4 = 512) bytes away from SRCADDR.

This process repeats for the programmed number of iterations as per the BCNT register. For example, the value of BCNT = 3 used in this example corresponds to four iterations. Note that the registers shown here are part of parameter-set configuration registers and the four iterations described here can be performed using a single parameter set. Thus, A-dimension is used to run through samples of a given vector, and B-dimension is used to repeat (iterate) the same operation for multiple vectors.

In addition to A and B dimensions, the Input Formatter also includes a provision for C-dimension. The C-dimension is only available in a certain restricted mode of operation called the Local Maxima Engine and its usage is explained in the section 28.10 of the TRM.

Copyright © 2025 Texas Instruments Incorporated

An important restriction in programming the registers related to source memory access pattern is that the input formatter can only read data from one memory row (128-bit memory location) in a clock cycle. Therefore, if a sample is placed in memory such that the real-part (I value) is at the end of one memory location and the imaginary part (Q value) is at the beginning of the next memory location, then that would be an invalid configuration (see Figure 7-92). Further, although the accelerator supports byte-addresses, only even values are allowed for SRCADDR, SRCAINDX, SRCBINDX and SRCCINDX.

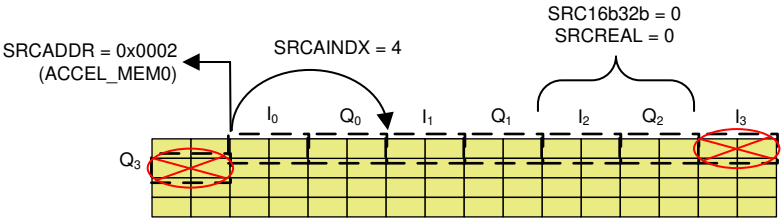

Figure 7-92. Invalid Configuration Example

7.4.3.1.3 Input Formatter – Circular and Shuffled Addressing

The input formatter additionally supports circular addressing in each of the A, B and C dimensions. For the A dimension, the register, SRCA_CIRCSHIFT controls the initial offset, while the registers, SRCA_CIRCSHIFTWRAP and SRC_CIRCSHIFTWRAP3X (bit 0) indicate the circular modulus at which the wrap-around happens.

For example, if SRCA_CIRCSHIFT is programmed as 7, then the input formatter skips sample indices 0 to 6 and reads samples from the source memory starting directly from index 7 (i.e., the 8th sample). Then, for wrap-around, if SRCA_CIRCSHIFTWRAP is programmed with a non-zero value and the LSB bit (bit 0) of SRC_CIRCSHIFTWRAP3X is 0, then the sample index wraps around (i.e., resets to 0) at 2^SRCA_CIRCSHIFTWRAP. Continuing the previous example, if SRCA_CIRCSHIFT = 7, SRCA_CIRCSHIFTWRAP = 9, and the LSB bit of SRC_CIRCSHIFTWRAP3X = 0, then the sample indices will be in the following order: 7, 8, 9, 10, 11, …, 510, 511, 0, 1, 2, 3, 4, 5, 6. On the other hand, in the same example, if the LSB bit (bit 0) of SRC_CIRCSHIFTWRAP3X is set equal to 1, then the sample index wraps around at 3*2^SRCA_CIRCSHIFTWRAP, and then the sample indices will be in the following order: 7, 8, 9, 10, 11, …, 1534, 1535, 0, 1, 2, 3, 4, 5, 6. Circular shifting is generally useful in CFAR and Local Maxima engines. Its usage is explained in more detail in the CFAR engine section in the scetion 28.10 of the TRM.

Circular shifting is also supported in B-dimension with registers SRCB_CIRCSHIFT, SRC_CIRCSHIFTWRAP and SRC_CIRCSHIFTWRAP3X (bit 1).

In addition to linear and circular addressing, the input formatter allows a shuffled access, in either the A-dimension or the B-dimension (selectable through the register SHUFFLE_AB). When engaged in A-dimension, the A-dimension's sample index is remapped (or shuffled) through a programmable look up table, Shuffle LUT. The Shuffle LUT is a 256 element vector (RAM) storing 12-bit numbers and this LUT can be programmed by the user with the shuffled index pattern that is desired. This feature is useful in rearranging angle dimension input samples for FFT. Note that the Shuffle LUT can hold only 256 elements atmost, and therefore the shuffled access is only supported for a maximum count of 256 (eg. SRCACNT of 255). Since Angle dimension FFT is usually small in size, this limitation is acceptable.

The start index within the Shuffle LUT (RAM) is also configurable in the parameter-set using the 4-bit register SHUFFLE_INDX_START_OFFSET. This 4-bit register value along with 4 LSBs padded as zeros becomes the 8-bit start index for the 256-element look-up table RAM. This feature allows multiple small shuffle patterns to be pre-stored in the Shuffle LUT, so that any of those patterns can be selected by appropriately setting this start index register in the parameter-set. For example, if SHUFFLE_INDX_START_OFFSET = 0010b, then the shuffled indices are picked up starting from index 32 (i.e., 00100000b) of the Shuffle LUT, and these shuffled indices in turn are used to pick up appropriate input samples from the source memory.

While A- and B-dimension have independent circular wrap around capabilities through the registers explained above, some use cases may need a combined (A, B) wrap around capability. A limited wrap around capability

Copyright © 2025 Texas Instruments Incorporated

in the combined (A, B) dimension is provided through the register WRAP_COMB (see Figure 7-93). If shuffling is enabled, it is possible that after combining (A, B) dimension, the combined value attempts to access an address outside the valid range. The register WRAP_COMB can be programmed to overcome this, and the input formatter wraps back any access outside the range [0, WRAP_COMB) to fall within this range.

Figure 7-93 shows how the sample count value (A-dimension sample index) and the iteration count value (B-dimension count) are used to calculate the address of the input sample to be fetched from the source memory. The exact addressing calculation is indicated in the schematic of the below figure. The bottom section of the figure showing C-dimension is only applicable in the case of a Local Max Engine mode of operation, which will be introduced later.

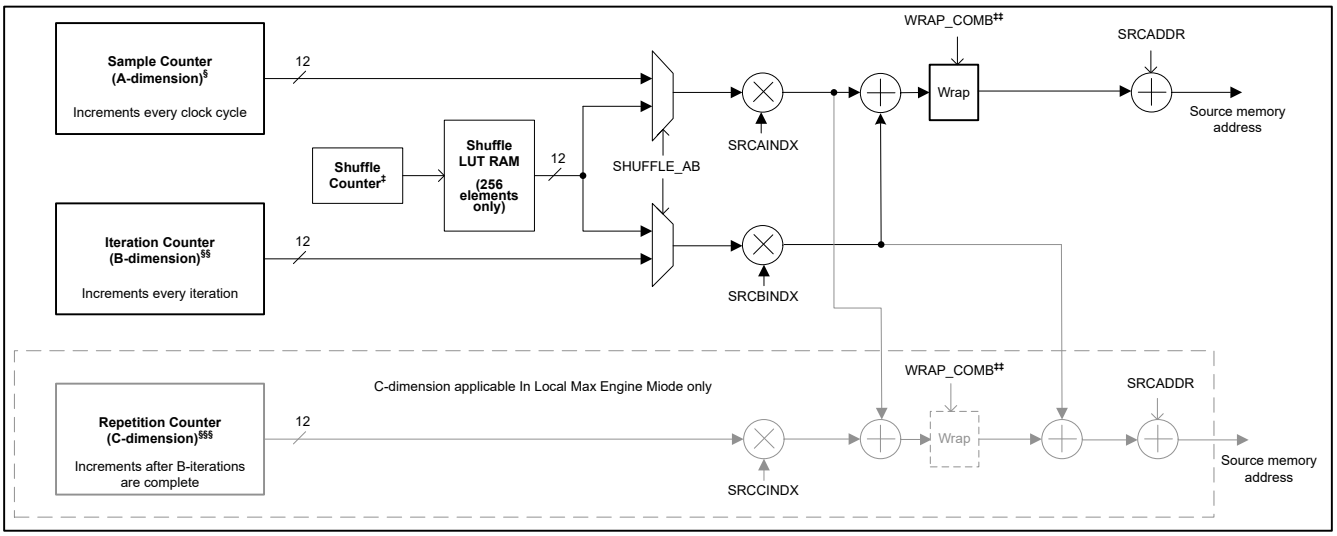

§ Starts at SRCA_CIRCSHIFT. If SRCA_CIRCSHIFTWRAP is non-zero, then wraps around at $2^{SRCA_CIRCSHIFTWRAP}$, or at $3*2^{SRCA_CIRCSHIFTWRAP}$

§§ Starts at SRCB_CIRCSHIFT. If SRCB_CIRCSHIFTWRAP is non-zero, then wraps around at $2^{SRCB_CIRCSHIFTWRAP}$, or at $3*2^{SRCA_CIRCSHIFTWRAP}$

§§§ Starts at SRCC_CIRCSHIFT. If SRCC_CIRCSHIFTWRAP is non-zero, then wraps around at $2^{SRCC_CIRCSHIFTWRAP}$, or at $3*2^{SRCA_CIRCSHIFTWRAP}$. Only applicable for Local Maxima Engine.

‡ Starts at SHUFFLE_INDX_START_OFFSET * 16. Increments every clock cycle if engaged in A-dim, or every iteration if engaged in B-dim.

‡‡ Wrap around based on WRAP_COMB register applies after combining A and B dimension address offsets. In local maxima engine mode, the WRAP_COMB register applies after combining A and C dimension address offsets.

Figure 7-93. Input Formatter's Source Memory Address Generation

7.4.3.1.4 Input Formatter – Scaling and Formatting

The input formatter allows the input samples read from the source memory to be scaled and formatted before feeding them as 24-bit complex samples into the core computational unit.

Even though the data read from the source memory is initially 16-bits or 32-bits wide (for each I and Q), the samples expected by the core computational unit are 24-bit complex samples (24-bits each for I and Q). There is a SRCSCAL register which provides scaling options using bit-shift to generate 24-bit samples from the original 16- or 32-bit data (see Figure 7-94).

For the 16-bit case, the 24-bit sample is generated by padding (8-SRCSCAL) zeros at the LSB and SRCSCAL redundant MSBs. For the 32-bit case, the 24-bit sample is generated by dropping SRCSCAL bits at the LSB and clipping (8-SRCSCAL) bits at the MSB. Note that the register bit SRCSIGNED is used to indicate whether the input samples are signed or unsigned. When this register bit is set, the input samples are treated as signed numbers and hence any extra MSB bits are sign- extended and any clipping of MSB bits takes care of signed saturation. In most cases of interest in this TRM (for example, when performing FFT operation), the input samples would be signed and hence SRCSIGNED should be set (i.e., equal to 1).

Copyright © 2025 Texas Instruments Incorporated

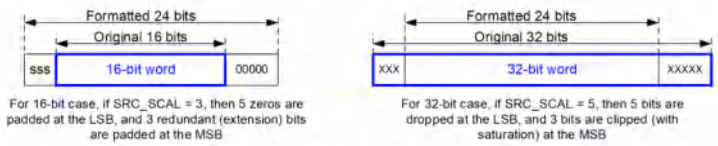

A. 16- or 32-bit words to 24-bit samples

Figure 7-94. Input Formatter Data Scaling

When the input samples are complex (for example, SRCREAL = 0), there is a provision to conjugate the input samples. Setting the register bit SRCCONJ conjugates the input samples before feeding them to the core computational unit. This feature (together with a corresponding DSTCONJ register bit in the output formatter block) enables an IFFT mode from the FFT engine. Note that conjugating the input and output of an FFT block is equivalent to an IFFT function.

There is also provision for swapping I and Q samples read from memory. This can be controlled using SRCIQSWAP register bit. If SRCIQSWAP = 0, then the I sample is located at the LSB bits, and the Q sample is located at the MSB bits.

There are other registers in the input formatter, such as BPM_EN, BPMPATTERNLSB and BPMPATTERNMSB, BPMRATE, and so on, which are beyond the scope of part one of this user's guide and these registers are described section 28.7.10 of the TRM. For the immediate purpose, of the first part of the TRM, it is important to note that BPM_EN and unused dimension (C) registers must be kept 0.

7.4.3.1.5 Input Formatter – Register Descriptions

Table 7-84 lists all the registers of the input formatter block.

Table 7-84. Input Formatter Registers

Register	Width	Parameter Set	Description
SRCADDR	20	Yes	Source start address: This register specifies the starting address of the input samples, for example, it specifies the source memory start address from which input samples have to be fetched by the input formatter. This is a byte-address but only even values are valid. This register covers the entire address space of the eight local memories (8 × 16KB = 128 KB). Only the 17 LSB bits of this register are relevant for this device, and the 3 MSB bits are reserved for future use. The eight accelerator local memories are contiguous in the memory address space and any of them can act as the source memory (as long as the same memory bank is not configured to be used as destination memory at the same time).
SRCACNT	12	Yes	Source sample count: This register specifies the number of samples (minus 1) from the source memory to process for every iteration. The sample count is in number of samples, not number of bytes. For example, the sample count can be specified as 255 (SRCACNT = 0x0FF) in a case where a 256-point FFT is required to be performed. Note however that the sample count register does not always match the FFT size. This can happen when zero-padding of input samples is required. For example, a sample count of 192 could be used with an FFT size of 256, in which case, the input formatter will automatically append 64 zeros.
SRCAINDX	20	Yes	Source sample index increment: This register specifies the number of bytes separating successive samples in the source memory. For example, a value of SRCAINDX = 16 means that successive samples are separated by 16 bytes in memory. Only even values are allowed for this register. The maximum value allowed for this register is 65534.

Copyright © 2025 Texas Instruments Incorporated

Table 7-84. Input Formatter Registers (continued)

BCNT	12	Yes	Number of iterations: This register specifies the number of times (minus 1) the processing should be repeated. This register can be used to process the four RX chains back-to-back – for example, a value of BCNT = 3 means that the processing (say first dimension FFT processing) is repeated four times. Note the distinction between the NUMLOOPS register of the state machine block and the BCNT register of the input formatter block. The NUMLOOPS register specifies how many times the state machine loops through all the configured parameter sets (with each time possibly awaiting a trigger), whereas the register BCNT specifies how many times the input formatter and the computational processing of the accelerator is iterated back-to-back for the current parameter set (without any intermediate triggers). Non-zero BCNT should be used only with non-zero ACNT.
SRCBINDX	20	Yes	Source offset per iteration: This register specifies the number of bytes separating the starting address of input samples for successive iterations. For example, when using four iterations to process the four RX chains, this register can be used to specify the offset in the starting address between the successive RX chains. Note the distinction that SRCAINDX specifies the number of bytes separating successive samples for a particular iteration, whereas SRCBINDX specifies the number of bytes separating the starting address of the first sample for successive iterations. Only even values are allowed for this register. The maximum value allowed for this register is 65534.
CCNT	12	Yes	C-dimension count – i.e., Number of times (minus 1) that the B dimension iterations are performed. This register specifies the C-dimension count. C-dimension is applicable only to Local Maxima Engine. Non-zero CCNT should be used only with non-zero BCNT.
SRCCINDX	20	Yes	Source offset in C-dimension: This register specifies the number of bytes separating the starting address of input samples for successive sets of B-dimension iterations. Only even values are allowed for this register. Refer to the description section for details on the address generation logic.
SRCREAL	1	Yes	Complex or Real Input: This register-bit specifies whether the input samples are real or complex. A value of SRCREAL = 0 implies complex input and a value of SRCREAL = 1 implies real input. When real input is selected, the input formatter block automatically feeds zero for the imaginary part into the core computational unit.
SRCA_CIRCSHIFT	12	Yes	Start index for circular shift in A-dimension. Input Formatter reads samples from the source memory with this start offset to the sample index.
SRCB_CIRCSHIFT	12	Yes	Start index for circular shift in B-dimension (similar to A-dimension circular shift).
SRCA_CIRCSHIFTWRAP	4	Yes	Circular shift wrap-around point for A-dimension: This register, when set to a non-zero value, specifies the wrap-around point for A-dimension sample counter. If SRC_CIRCSHIFTWRAP3X (A-dimension bit) is set to 0, the A-dimension sample index counter wraps around (i.e., resets to 0) when the counter exceeds (2^SRCA_CIRCSHIFTWRAP-1). When that bit is 1, the A-dimension sample index counter wraps around when the counter exceeds (3*2^SRCA_CIRCSHIFTWRAP-1).

Copyright © 2025 Texas Instruments Incorporated

Table 7-84. Input Formatter Registers (continued)

SRCB_CIRCSHIFTWRAP	4	Yes	Circular shift wrap-around point for B-dimension: This register, when set to a non-zero value, specifies the wrap-around point for B-dimension iteration counter. Functionality is similar to SRCA_CIRCSHIFTWRAP.
SRC_CIRCSHIFTWRAP3X	2	Yes	3X enable for circular shift wrap-around: This register is used in conjunction with SRCA_CIRCSHIFTWRAP and SRCB_CIRCSHIFTWRAP to specify the wrap-around point when circular shift is used. Bit 0 of this register corresponds to A-dimension, and bit 1 corresponds to B-dimension. Refer description of SRCA_CIRCSHIFTWRAP for details.
SHUFFLE_AB	2	Yes	Shuffled addressing: If this register is set to 0b01, the Shuffle LUT is used for sample index re-ordering in A-dimension. If it is set to 0b10, it is used in B-dimension. If this register is set to 0b00, the Shuffle LUT is bypassed / ignored.
SHUFFLE LUT RAM[256] DSS_HWA_SHUFFLE_RAM	12	No	This RAM stores the Shuffle LUT contents
SHUFFLE_INDX_START_OFFSET	4	Yes	Start index for the Shuffle LUT: This register together with 4 zeros padded at the LSB becomes the 8-bit starting index for the 256-element Shuffle LUT (RAM).
WRAP_COMB	20	*Yes*	Combined wrap around for A and B dimension: This is applicable in Shuffled addressing mode. The combined A & B dimension based address offset is wrapped around this number.
SRC16b32b	1	Yes	16-bit or 32-bit input word alignment: This register-bit specifies whether the input samples fetched from source memory are to be read as 16-bits or 32-bits wide. A value of SRC16b32b = 0 implies that the input samples are 16-bits wide each (in case of complex input, real and imaginary parts are each 16 bits wide). A value of SRC16b32b = 1 implies that the input samples are 32-bits wide each.
SRCSIGNED	1	Yes	Input sign-extension mode: This register-bit, when set, specifies that the input samples are signed numbers and hence, sign-extension or signed-saturation at the MSB is required when converting 16- bit or 32-bit input words to the 24-bit wide samples to be fed into the core computational unit.
SRCCONJ	1	Yes	Input conjugation: This register-bit specifies whether the input samples should be conjugated before feeding them into the core computational unit. If SRCCONJ is set, then the input samples are conjugated. Setting this register-bit only makes sense if the samples are complex numbers (for example, SRCREAL = 0). This register, together with its counterpart in the output formatter block, enable an IFFT mode for the FFT engine. Note that conjugating the input and output of an FFT block is equivalent to an IFFT function.
SRCSCAL	4	Yes	Input scaling: This register specifies a programmable scaling using bit-shift, when converting the 16-bit or 32-bit wide input data to 24-bit wide samples before feeding into the core computational unit. See Figure 8 and its description for more details regarding this register.
SRCIQSWAP	1	Yes	Swap the I & Q samples drawn from memory. LSB bits drawn from memory is used as I, and the MSB bits are used a Q of input
IP_OP_FORMATTER_CLIP_STATUS. ip_formatter_clip_status	1	No	Read-only register that indicates clip status for input formatter (during scaling).

Copyright © 2025 Texas Instruments Incorporated

Table 7-84. Input Formatter Registers (continued)

CLR_CLIP_MISC.clr_clip_status	1	No	Below clip status read-registers will be cleared upon writing to this self-clearing register bit: channel_comb_clip_status, dc_acc_clip_status, dc_est_clip_status, intf_stats_mag_accumulator_clip_status, intf_stats_magdiff_accumulator_clip_status, intf_stats_thresh_mag_clip_status, intf_stats_thresh_magdiff_clip_status, twid_incr_delta_frac_clip_status, ip_formatter_clip_status, op_formatter_clip_status
BPM_PATTERN_0, BPMPATTERN_1, … BPMPATTERN_7	–	–	Described in part two of this user's guide. For the immediate purposes relevant to part one of this user's guide, all of these registers must be kept as 0.
BPMRATE	–	–	Described in section 28.7.7 of the TRM.
BPMPHASE	–	–	Described in section 28.7.7 of the TRM.

Copyright © 2025 Texas Instruments Incorporated

7.4.4 Accelerator Engine – Output Formatter

This section describes the output formatter block present in the accelerator engine (see Figure 7-95).

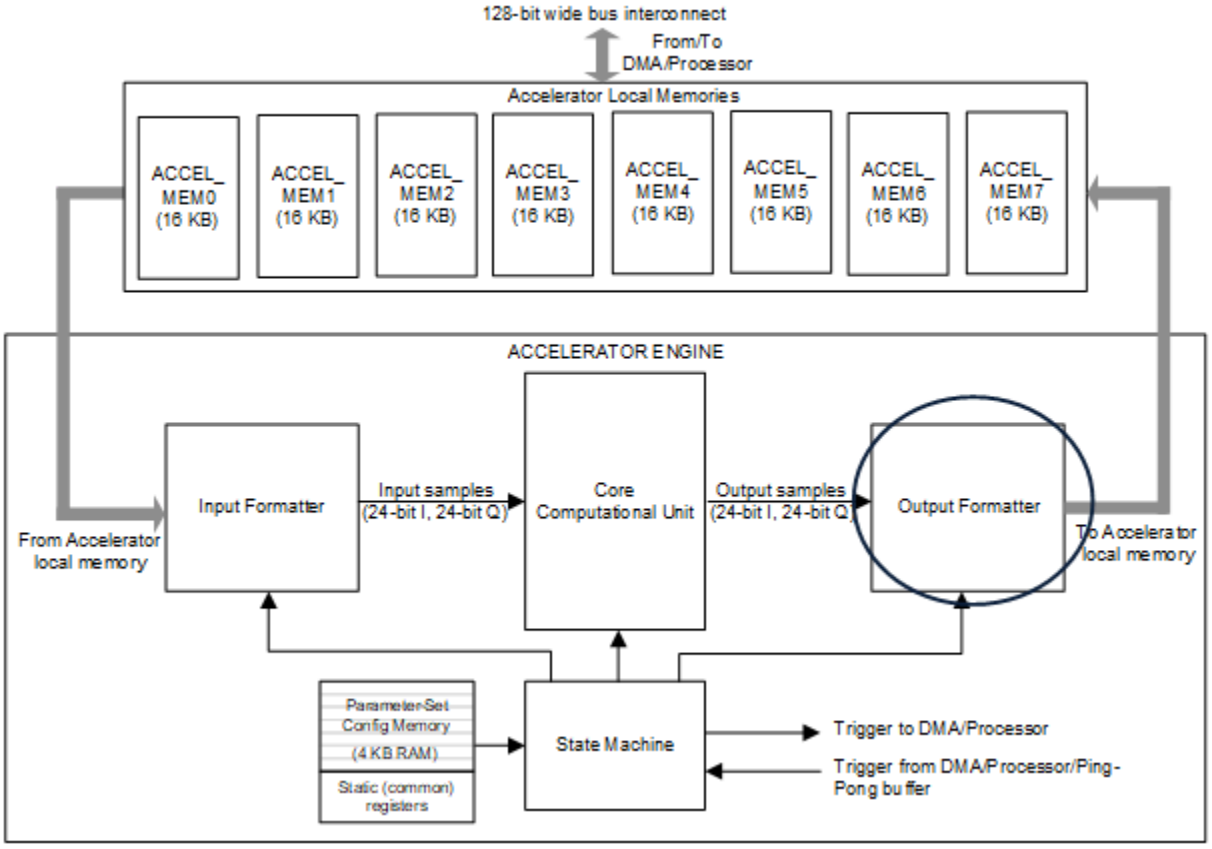

Figure 7-95. Output Formatter

7.4.4.1 Output Formatter

The output formatter is used to format and write the data coming out of the core computational unit into the accelerator local memory. Similar to the input formatter block discussed in the previous section, the output formatter block also provides various capabilities to format and write the samples written to the local memory – especially, various multidimensional access patterns (for example, transpose writes), 16-bit or 32-bit aligned word writes, scaling using bit-shifts to generate 16-bit or 32-bit words from 24-bit wide samples, real versus complex output write, and more.

7.4.4.1.1 Output Formatter – Operation

The output formatter block is responsible for storing the samples coming out of the core computation unit into the accelerator local memory (see Figure 7-95). As mentioned in the previous section, the data flow from the input formatter, through the core computational unit, to the output formatter, is designed to sustain a steady-state throughput of one complex sample per clock cycle. Thus, typically, the output formatter accepts one sample (24-bit I and 24-bit Q) from the core computational unit every clock cycle and writes it to the accelerator local memory. Just like the input formatter, the output formatter also supports lot of flexibility in how the samples are formatted and written into the memory.

The memory into which the output formatter writes the data is referred to as *destination memory*. Note that any of the four accelerator local memories can be the destination memory, with the important restriction that the source memory cannot be same as the destination memory. In other words, each of the eight 16KB memory banks can either function as source memory, or as destination memory at any time (for example, in any given parameter set).

Copyright © 2025 Texas Instruments Incorporated

7.4.4.1.2 Output Formatter – 2-D Indexed Addressing for Destination Memory Access

The parameter-set register DSTADDR specifies the start address at which the output samples must be written into the accelerator local memory. Similar to the SRCADDR register of the input formatter, the DSTADDR register of the output formatter is a byte-address and a value of 0x0 corresponds to the first memory location of ACCEL_MEM0 memory. The DSTADDR register maps to the entire 128KB address space of the eight accelerator local memories (each 16KB). As mentioned in the previous paragraph, in a given parameter set, SRCADDR and DSTADDR cannot be configured such that the input samples being fetched and the output samples being written out are accessing the same memory bank.

Even though the core computational unit produces a 24-bit complex output stream, this output data can be written to the memory as either 16-bit wide samples or 32-bit wide samples. Also, they can be written out as complex samples or real samples (for example, drop imaginary part – applicable when performing log-magnitude computation). These two aspects are configured using register bits DST16b32b and DSTREAL. See Section 7.4.4.1.4 for a description of these and other registers pertaining to the output formatter block. As an example, if DST16b32b = 0 and DSTREAL = 0, then the output samples are written to the memory as 16-bit complex samples (16-bit I and 16-bit Q), shown in Figure 7-96.

Similar to the input formatter block, the output formatter block also supports flexible patterns to write multidimensional data to the destination memory and this makes it convenient when the data corresponding to multiple RX channels must be interleaved, or when performing multidimensional (FFT) processing. This feature is facilitated through the DSTAINDX, DSTACNT, DSTBINDX, and BCNT registers, which are part of each parameter-set configuration.

The register DSTAINDX specifies how many bytes separate successive samples to be written to the destination memory and the register DSTACNT specifies how many samples must be written per iteration. Note that DSTACNT can be different from SRCACNT – this is useful when only a subset of the output samples need to be stored in the output memory (for example, if some FFT output bins must be discarded). The register DSTBINDX specifies how many bytes separate the start of output samples for successive iterations and BCNT specifies the number of iterations. The BCNT register is common for input formatter and output formatter. These registers can be better understood using the example given in Figure 7-96.

Copyright © 2025 Texas Instruments Incorporated

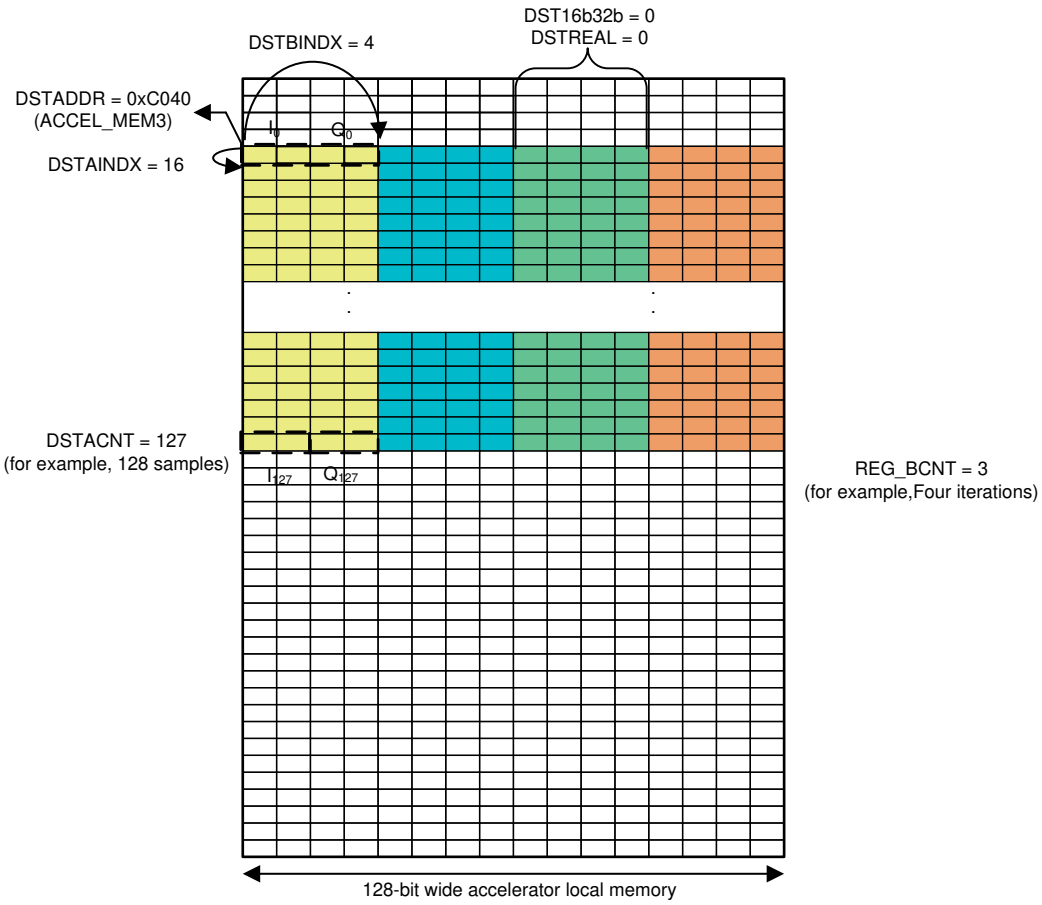

Figure 7-96. Output Formatter Destination Memory Access Pattern (Example)

In the example shown in Figure 7-96, the output data consists of complex data (16-bit I and 16-bit Q) that is written to ACCEL_MEM3. The output data consists of four sets of 128 samples each (say, corresponding to FFT output of four RX antennas) and these are shown in four different colors. Each sample occupies 4 bytes and the samples are written to the output memory at a specific start address inside ACCEL_MEM3, as shown in Figure 7-96. The samples for the four RX antennas are written to the memory in an interleaved manner. Thus, for this example, a value of DSTADDR = 0xC040, DSTAINDX = 16, DSTACNT = 127, and DSTBINDX = 4 are used. The register BCNT (common for input formatter and output formatter) is configured with a value of 3, corresponding to the four iterations required (for the four RX antennas). In steady state, for each clock cycle, the output formatter accepts one complex sample from the core computational unit and writes it into the memory as per the 2-D indexed addressing pattern programmed.

The register DSTACNT, which corresponds to the number of samples written to the destination memory for each iteration does not need to be equal to SRCACNT. This is useful in cases where some of the output samples (for example, some FFT bins at the end) can be dropped and do not need to be written into the destination memory. Another register, DST_SKIP_INIT is also available, which can be used to skip some samples in the beginning as well. The number of samples written to the destination memory for each iteration is equal to (DSTACNT + 1) – DST_SKIP_INIT.

Note that when performing FFT operations, internally the core computational unit sends out FFT output data in bit-reversed addressing order, but this is automatically handled in the output formatter, such that when the FFT output samples are written into the destination memory, they are written out in the correct normal order. Therefore, no special procedure is required on the part of the main processor to read the FFT output samples in the right sequence.

Copyright © 2025 Texas Instruments Incorporated

Similar to the input formatter, the output formatter can write data into only one memory row (128-bit memory location) in a clock cycle. Therefore DSTADDR, DSTAINDX, and DSTBINDX should be programmed such that no sample needs to be partially written in one memory row and the next (e.g. if DST16b32b=1). Also, these address parameters should be restricted to even values.

7.4.4.1.3 Output Formatter – Scaling and Formatting

The output formatter allows the 24-bit output samples from the core computational unit to be scaled and formatted before writing them to the destination memory as 16-bit or 32-bit words. There is a DSTSCAL register which provides scaling options using bit-shift, to take the 24-bit samples and convert them to 16-bit or 32-bit data.

For the 16-bit case (see Figure 7-97), the 24-bit sample (24-bits for each I and Q) is converted to 16-bit word by dropping DSTSCAL bits at the LSB and by clipping with saturation (8-DSTSCAL) bits at the MSB. For the 32-bit case, the 24-bit sample is padded with DSTSCAL extra bits at the MSB and with (8-DSTSCAL) extra zeros at the LSB. Note that the register bit DSTSIGNED is used to indicate whether the output samples are signed or unsigned. When this register bit is set, the output samples are treated as signed numbers and therefore any extra MSB bits are sign-extended and any clipping of MSB bits handles signed saturation. In most cases of interest in the TRM (for example, when performing FFT operation), the output samples would be signed and therefore DSTSIGNED should be set (for example, equal to 1). However, if the log-magnitude operation in the core computational unit is enabled, then the output samples are unsigned and therefore DSTSIGNED is cleared (for example, equal to zero).

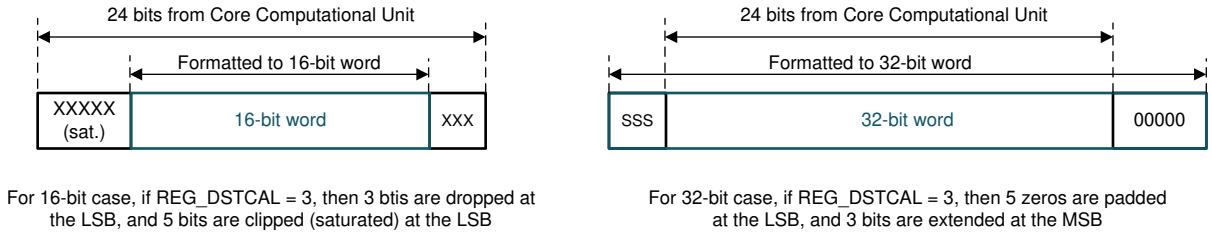

Figure 7-97. Output Formatter Data Scaling

When the output samples are complex (for example, DSTREAL = 0), there is a provision to conjugate the output samples. Setting the register bit DSTCONJ conjugates the output samples before writing them to the destination memory. This feature (together with a corresponding SRCCONJ register bit in the input formatter block) enables an IFFT mode from the FFT engine.

In addition, there is provision for swapping I and Q samples written into the destination memory. This is controlled using DSTIQSWAP register bit.

7.4.4.1.4 Output Formatter – Register Descriptions

Table 7-85 lists all the registers of the output formatter block.

Table 7-85. Output Formatter Registers

Register	Width	Parameter Set	Description

Copyright © 2025 Texas Instruments Incorporated

Table 7-85. Output Formatter Registers (continued)

DSTADDR	20	Yes	Destination start address: This register specifies the starting address of the output samples, for example, it specifies the destination memory start address at which the output samples have to be written by the output formatter. This is a byte-address but only even values are valid. This register covers the entire address space of the eight local memories (8 × 16KB = 128 KB). Only the 17 LSB bits of this register are relevant for this device, and the 3 MSB bits are reserved for future use. The eight accelerator local memories are contiguous in the memory address space and any of them can act as the destination memory (as long as the same memory bank is not configured to be used as source memory at the same time).
DSTACNT	12	Yes	Destination sample count: This register specifies the number of samples (minus 1) to be written to the destination memory for every iteration. The sample count is in number of samples, not number of bytes. For example, the sample count can be specified as 191 (DSTACNT = 0x0BF) in a case where 192 samples must be written. Note that the DSTACNT register can be different from SRCACNT or even the FFT size. This is useful when only a part of the FFT bins must be written to memory and the remaining (far-end FFT bins) can be discarded. This register description is true when the DST_SKIP_INIT register value is zero (see further for more information related to DST_SKIP_INIT).
DSTAINDX	20	Yes	Destination sample index increment: This register specifies the number of bytes separating successive samples to be written to the destination memory. For example, a value of DSTAINDX = 16 means that successive samples written to the destination memory should be separated by 16 bytes. Only even values are allowed for this register. The maximum value allowed for this register is 65534.
DSTBINDX	20	Yes	Destination offset per iteration: This register specifies the number of bytes separating the starting address of output samples for successive iterations. For example, when using four iterations to process four RX chains, this register can be used to specify the offset in the starting address between the successive RX chains. Note the distinction that DSTAINDX specifies the number of bytes separating successive samples for a particular iteration, whereas SRCBINDX specifies the number of bytes separating the starting address of the first sample for successive iterations. Only even values are allowed for this register. The maximum value allowed for this register is 65534.
DST_SKIP_ INIT	10	Yes	Destination skip sample count: This register specifies how many output samples should be skipped in the beginning, before starting to write to the destination memory. This is useful if only a certain part of the FFT output (skipping the first several bins) need to be stored in memory. The total number of samples written to destination memory is equal to DSTACNT+1-DST_SKIP_INIT.

Copyright © 2025 Texas Instruments Incorporated

Table 7-85. Output Formatter Registers (continued)

DSTREAL	1	Yes	Complex or real output: This register-bit specifies whether the output samples are real or complex. A value of DSTREAL = 0 implies complex output and a value of DSTREAL = 1 implies real output. When real output is selected, the output formatter block automatically stores only the real part into the destination memory. This is useful when the core computational unit is configured to output magnitude or log-magnitude values.
DST16b32b	1	Yes	16-bit or 32-bit output word alignment: This register-bit specifies whether the output samples are to be written as 16-bits or 32- bits wide in the destination memory. A value of DST16b32b = 0 implies that the output samples are to be written as 16-bit words (in case of complex output, real and imaginary parts are each 16 bits wide). A value of DST16b32b = 1 implies that the output samples are 32-bits wide each.
DSTSIGNED	1	Yes	Output sign-extension mode: This register-bit, when set, specifies that the output samples are signed numbers and therefore, sign-extension or signed-saturation at the MSB is required when converting the 24-bit wide samples coming from the core computational unit into 16-bit or 32-bit output words to be written to the destination memory.
DSTCONJ	1	Yes	Output conjugation: This register-bit specifies whether the output samples must be conjugated before writing them into the destination memory. If DSTCONJ is set, then the output samples are conjugated. Setting this register-bit only makes sense if the samples are complex numbers (for example, DSTREAL = 0). This register, together with its counterpart in the output formatter block, enables an IFFT mode for the FFT engine.
DSTSCAL	4	Yes	Output scaling: This register specifies a programmable scaling using bit-shift, when converting the 24-bit samples coming from the core computational unit into 16-bit or 32-bit wide words to be written to the destination memory. See Figure 11and its description for more details regarding this register.
DSTIQSWAP	1	Yes	IQ Swapping : Swap the I & Q samples written out to memory.
IP_OP_FORMATTER_CLIP_STATUS. op_formatter_clip_status	1	No	Read-only register that indicates clip status for output formatter (during scaling).
MEM_INIT_START. MEM_INIT_START_PARAM_RAM	1	No	Writing 1'b1 would start the memory initialization for the Param memory. Self-clearing bit.
MEM_INIT_START.MEM_INIT_START_DMEM7, MEM_INIT_START_DMEM6, .. MEM_INIT_START_DMEM0	1	No	Writing 1'b1 would start the memory initialization for the DMEM7, DMEM6.. DMEM0. Self-clearing bit
DMEM0, DMEM1… DMEM7 (MEM_ACCESS_ERR_STATUS) MEM_ACCESS_ERR_STATUS.dmem0..7	1	No	Memory access error: This set of 8 1-bit read-only registers indicates if there is a memory access error caused by incorrect configuration or usage of the accelerator, where both the DMA and the accelerator are attempting to access the same 16KB memory at the same time. The composite 8- bit register indicates the error status for the 8 16KB memories (DMEM0 bit corresponds to ACCEL_MEM0).

Copyright © 2025 Texas Instruments Incorporated

7.4.5 Accelerator Engine – Core Computational Unit

This section describes the core computational unit present in the accelerator engine (see Figure 7-98).

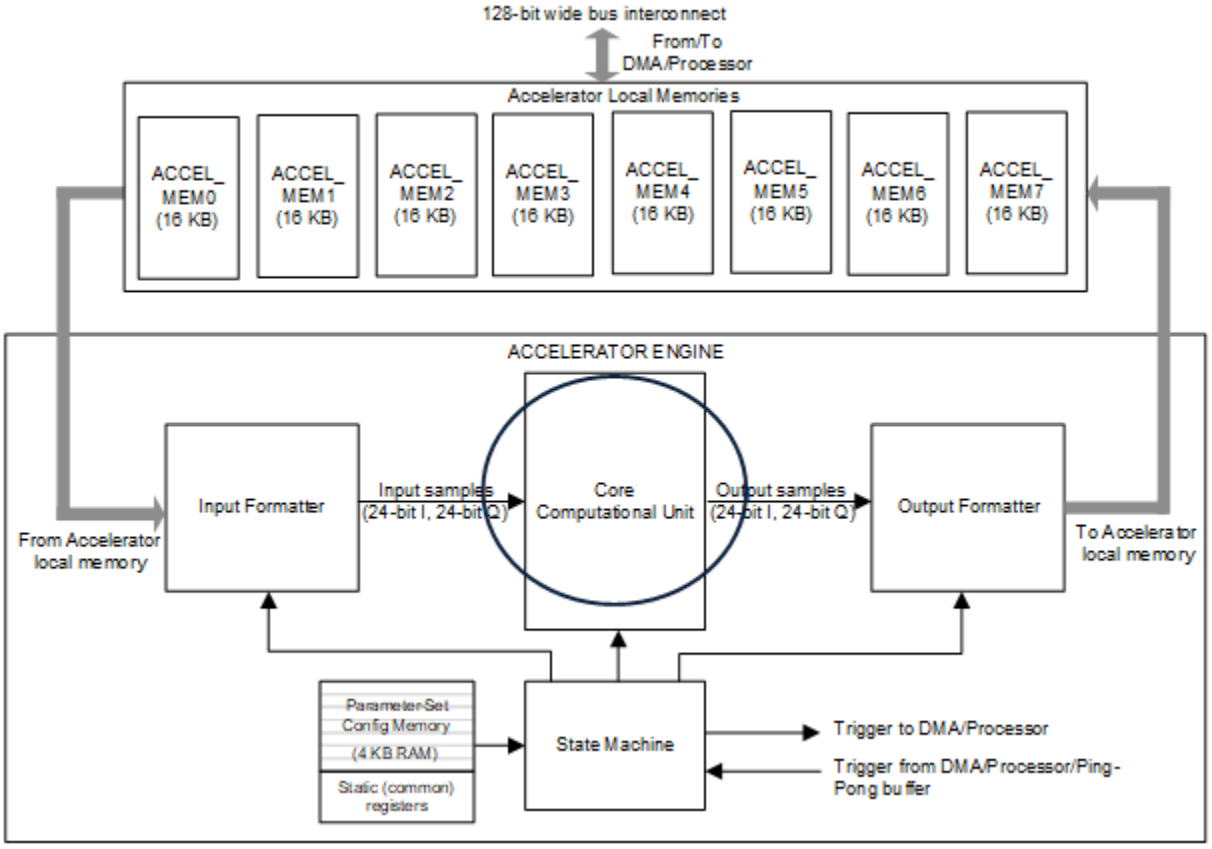

Figure 7-98. Core Computational Unit

7.4.5.1 Core Computational Unit

The core computational unit performs the mathematical operations required for the key functions, such as FFT, log-magnitude, CFAR detection, and so on. The core computational unit accepts a streaming 24-bit complex input (24 bits for each I and Q) from the input formatter block and it outputs a streaming 24-bit complex output (24 bits for each I and Q) to the output formatter block.

Copyright © 2025 Texas Instruments Incorporated

Figure 7-99 shows the block diagram of the core computational unit. The core computational unit has four main computation engines, namely:

- FFT Engine: Performs Pre-processing, Windowing, FFT and Log-magnitude.
- CFAR Engine: Performs CFAR detection using CFAR-CA or CFAR-OS method.
- Local Maxima Engine: Performs threshold and local maxima based peak identification.
- Compression Engine: Used for compression and decompression of radar data.

Only one of these four engines can be operational at any given instant. However, in separate parameter sets, different engines can be configured and used, so that multiple parameter sets executing one after another can accomplish a sequence of computational operations as desired. The register ACCEL_MODE controls which engine gets used in a given parameter set.

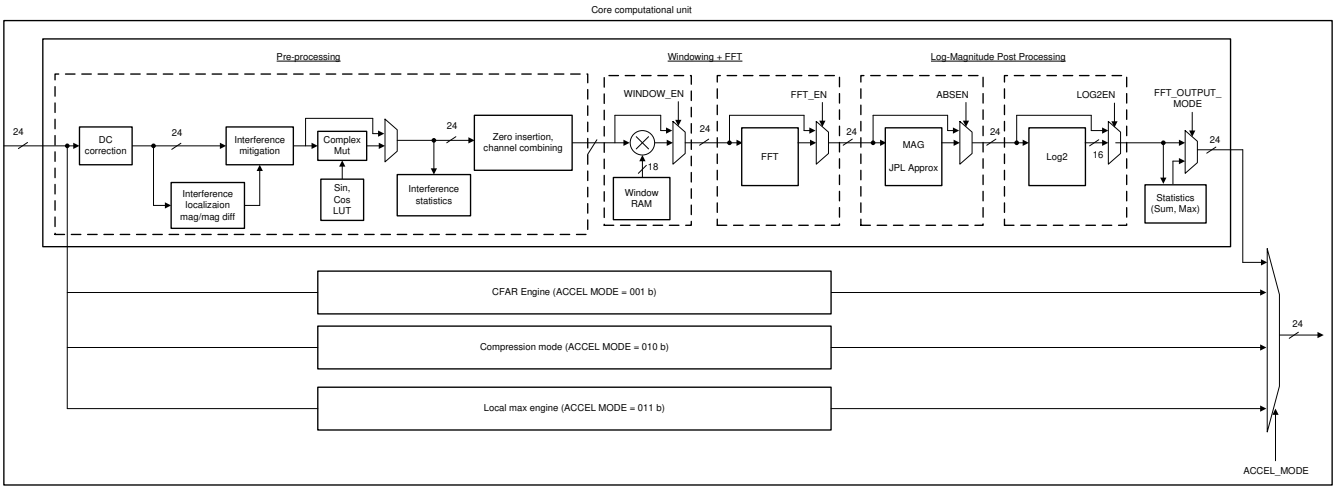

Figure 7-99. Core Computational Unit Block Diagram

7.4.5.1.1 Core Computational Unit – FFT Engine – Operation

The core computational unit operates on the streaming input of samples coming from the input formatter block, and in general outputs a stream of samples (after an initial latency in some cases) to the output formatter block. In general, at steady-state, one input sample is processed and one output sample is produced every clock.

The FFT Engine in the core computational unit has the ability to perform pre-processing, windowing, FFT, and log-magnitude computations. Each of these computational subblocks operate on a streaming input and produce a streaming output at the throughput of one sample per clock. These computational subblocks are stitched together one after the other in a series, as shown in Figure 7-99. This architecture allows multiple operations to be done in a streaming manner (for example, windowing and FFT can be done together), while at the same time, providing the user flexibility to choose one operation at a time.

The parameter-set registers WINDOW_EN, FFT_EN, ABS_EN, and LOG2_EN control the multiplexers (see Figure 7-99), which decide what operations are performed on the input samples for that parameter set.

Note that for the purpose of FFT engine operation in this section, the registers ACCEL_MODE and FFTOUT_MODE must be kept at zero. The purpose of these registers is covered in following sections of the TRM.

7.4.5.1.2 Core Computational Unit – FFT Engine – Windowing

The incoming samples from the input formatter to the core computational unit are passed through the (optional) windowing operation (see Figure 7-100). Windowing operation is often required prior to performing FFT, to mitigate the sinc roll-off leakage from one strong FFT bin to the adjacent bins.

As the incoming samples from the input formatter stream in, each sample is multiplied by the appropriate window coefficient read from a Window RAM. Because the incoming samples are complex 24-bits wide (24-bits for each I and Q), the windowing operation involves multiplying the 24-bit I and 24-bit Q of the incoming sample with the

Copyright © 2025 Texas Instruments Incorporated

window coefficient (see Figure 7-100). The output of this multiplication is rounded back to 24-bit I and 24-bit Q by dropping excess LSBs. Note that windowing can be enabled by setting the register bit WINDOW_EN to 1.

The window RAM can hold up to 2048 32-bit words. The window coefficients can be stored in these words in one of the following three formats:

1. 18-bit real coefficients: If WINDOW_MODE = 0b00, the window coefficients are assumed to be 18-bit signed real values. Up to 2048 real coefficients can be stored in the window RAM in this mode (one 32-bit word in the RAM stores one 18-bit coefficient).
2. 16-bit real coefficients: If WINDOW_MODE = 0b01, the window coefficients are assumed to be 16-bit signed real values. Up to 4096 real coefficients can be stored in the window RAM in this mode (one 32-bit word in the RAM stores two successive 16-bit coefficients: the 16LSBs store coefficients 0, 2, 4, etc. and 16MSBs store coefficients 1, 3, 5, etc.).
3. 16-bit complex coefficients: If WINDOW_MODE = 0b10, the window coefficients are assumed to be 16-bit I and 16-bit Q complex values. Up to 2048 complex coefficients can be stored in the window RAM in this mode (one 32-bit word in the RAM stores the real part of the coefficient in the 16 LSBs of the word and the imaginary part in the 16 MSBs of the word).

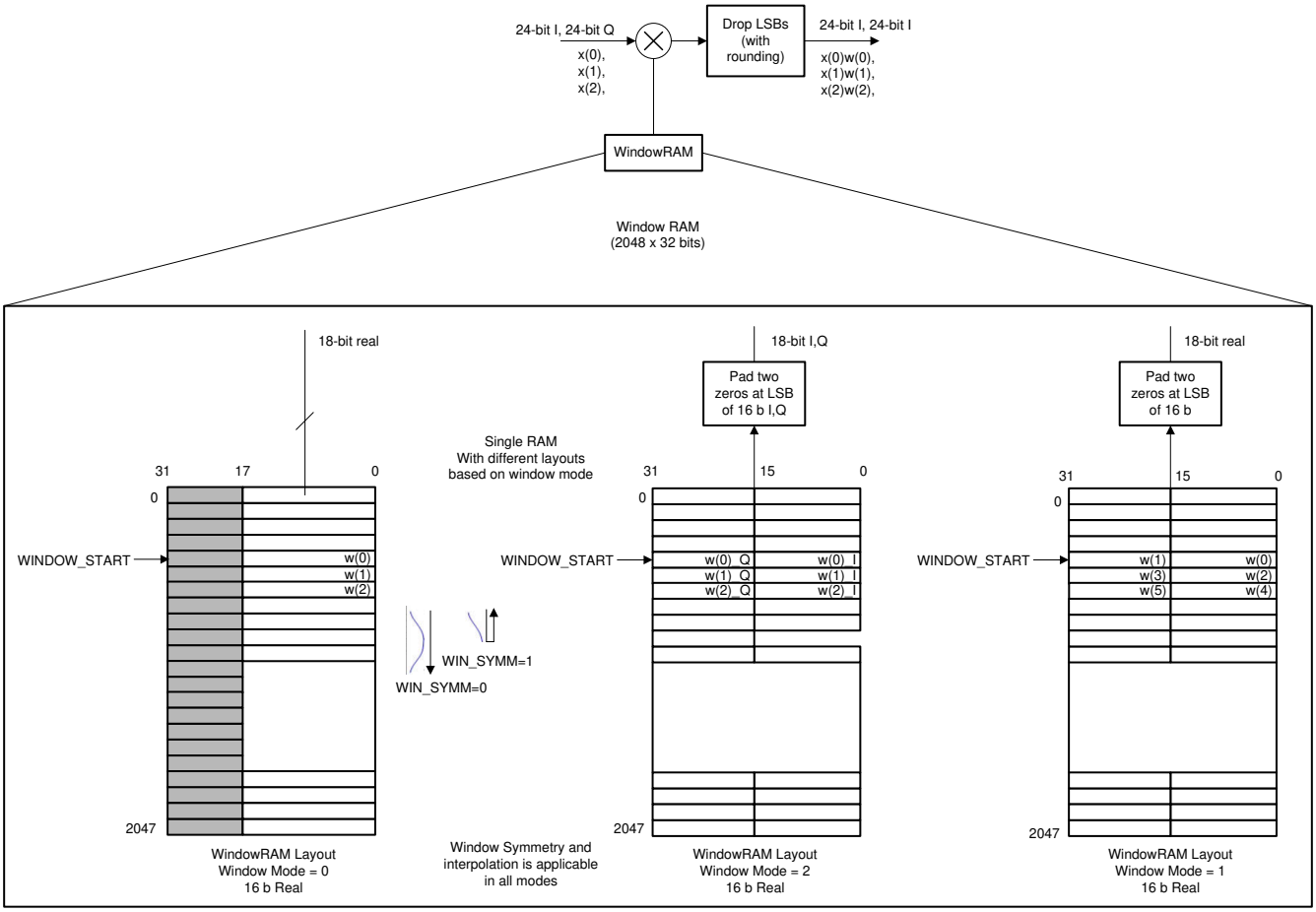

Figure 7-100. Window RAM Layout for 18b Real, 16b Complex and 16b Real Modes

The start location (32-bit word index) in the window RAM is programmed in a 11-bit register WINDOW_START as part of the parameter set, so that the windowing computation can pick the appropriate window coefficients starting from that index. For each incoming sample, the index keeps incrementing, so that each successive sample is multiplied by the successive window coefficient. At the end of each iteration (for example, when SRCACNT number of samples have been processed), the index resets back to the starting coefficient index programmed for the parameter set, so that the next iteration can be performed. At the end of all the iterations

Copyright © 2025 Texas Instruments Incorporated

of the current parameter set, the next parameter set can use a different window if desired. For example, when performing second- and third-dimension FFTs one after another (in two parameter sets), the window functions for both these FFTs can be pre-stored in the Window RAM and appropriate start index can be provided for each of the FFT operation dimensions.

If the window function is symmetric, the user may store only one half of the window coefficients in the Window RAM. The register bit WINSYMM, when set, indicates that after SRCACNT / 2 samples (or, if SRCACNT is odd, (SRCACNT + 1) / 2 samples) are processed, the window coefficients read-indexing must be reversed, so that the same set of coefficients used for the first SRCACNT / 2 samples are reused in the reverse order for the next SRCACNT / 2 samples. (See Figure 7-100). If SRCACNT is odd, then the last window coefficient is read only once, when the direction is reversed. If SRCACNT is even, then the last window coefficients is read twice, when the direction is reversed. In the dynamic window mode, the coefficients are read from the corresponding bank only.

The output of the windowing computation is 24-bit I and 24-bit Q, which is streamed into the FFT subblock.

7.4.5.1.3 Core Computational Unit – FFT Engine – FFT

The FFT subblock performs FFT on the incoming 24-bit I and 24-bit Q data stream. The FFT size is programmable, in the range, 2 to 2048. FFTs of length 2N for N = 0 to 11, and 3x2N for N = 0 to 9 are supported. Advanced features such as direct computation of two-dimensional FFTs, as well as an FFT *stitching* feature that realizes FFTs of larger lengths using a two-step process, are also supported. But their description is deferred to section 28.7.6 of the TRM.

The lowest FFT size of 2 is mostly useful as a *complexadd-subtract* feature or while using the *FFT*stitchingfeature. FFT sizes of 4, 8, 16, and 32 can be used for third dimension (angle estimation) FFT.

The FFT operation can be enabled or disabled by using the register bit FFT_EN. When enabled, the FFT subblock computes the FFT of the input data stream and produces a 24-bit I and 24-bit Q output stream. This output stream is initially in bit-reversed order, but the output formatter handles appropriately writing the output to the destination memory in the correct order.

The FFT implementation comprises a series of butterfly stages. Depending on the FFT size needed, an appropriate number of butterfly stages are employed.The FFT size is programmed using the registers, FFTSIZE and FFTSIZE_3X_EN.

For power-of-2 FFT sizes, the register bit FFTSIZE_3X_EN should be kept 0. The FFT size is configured using the register FFTSIZE and the actual FFT size in this case is 2^FFTSIZE. When an FFT size of the form (3 * power-of-2) is needed, then the register bit FFTSIZE_3X_EN should be set to 1. In this case, the actual FFT size is 3 * 2^FFTSIZE.

For example, if FFTSIZE_3X_EN is 0, then FFTSIZE = 5 means 32-point FFT, FFTSIZE = 7 means 128-point FFT, and so on. In this case, the FFT is realized using a series of FFTSIZE number of radix-2 butterfly stages. On the other hand, if FFTSIZE_3X_EN is set to 1, then FFTSIZE = 5 means a 96-point FFT, FFTSIZE = 7 means 384-point FFT. In these cases, an additional radix 3 butterfly stage is engaged before feeding to the original series of radix-2 butterfly stages.

Note that the FFT size must be equal to or larger than SRCACNT, and the input formatter block automatically zero-pads extra samples to account for the difference between FFT size and SRCACNT.

7.4.5.1.4 Core Computational Unit – FFT Engine – FFT – Zero Padding

The FFT engine has provision for *zeropadding*, which is important when performing FFT of a set of samples whose length doesn’t match a supported FFT size. The FFT engine automatically feeds the required number of zeros into the core computational unit, whenever the FFT size (as programmed using the FFTSIZE register, which is described in a later section) does not match the SRCACNT setting.

For example, if the number of input samples read by the input formatter is 56 (for example, SRCACNT = 55) and the FFT size is programmed to be 64 (FFTSIZE = 6, FFTSIZE_3X_EN = 0), then the FFT engine feeds 8 zeros at the end of each iteration, before starting to read the input samples for the next iteration from the

Copyright © 2025 Texas Instruments Incorporated

source memory. This zero-padding provision enables the core computational unit to perform 64-point FFT with the correct set of zero-padded input samples.

The zero padding is effective only when performing FFT operation in the core computational unit (i.e., when FFT_EN = 1) and not otherwise. Advanced features such as zero insertion (at programmable locations) and channel combining are described in section 28.7.9 of the TRM.

7.4.5.1.5 Core Computational Unit – FFT Quantization and Speed Performance

As is well known, a butterfly stage typically consists of add-subtract and twiddle multiplication operations. At the output of each add-subtract structure, the bit-width would increase by 1 bit (for example, 24-bit input would grow to 25-bit output). To handle this one-bit growth due to add-subtract operation, there is a provision at the output of each butterfly add-subtract stage to scale the result back to 24 bits, by either dividing the output by 2 (round off one LSB) or by saturating one MSB, shown in Figure 7-101.

The multi-bit register BFLY_SCALING is used to control this divide-by-2 scaling operation at each stage, so that the user has full flexibility to control the signal level through the different butterfly stages. If BFLY_SCALING = 0 for a particular stage, then the 25-bit output is saturated at the MSB to get back to 24 bits. Otherwise, it is convergent-rounded at the LSB to get back to 24 bits. The user can thus control the scaling at each of the butterfly stages. The LSB of this multi-bit register corresponds to the last stage and the MSB of this register corresponds to the first stage. For an FFT size of 64, only the LSB 6 bits are relevant. Similarly, for an FFT size of 3*64, the LSB 6 bits are relevant. Additionally the register, BFLY_SCALING_FFT3X indicates the scaling option for the single radix-3 stage (i.e., it supports removing 0 or 1 or 2 LSBs).

There is a multi-bit read-only register FFTCLIP which indicates whether there was any clipping in any of the butterfly stages. This register is a sticky register that gets set when a clipping event occurs and remains set until it is cleared using the CLR_FFTCLIP register bit. See the register description of FFTCLIP in Section 7.4.5.1.9.

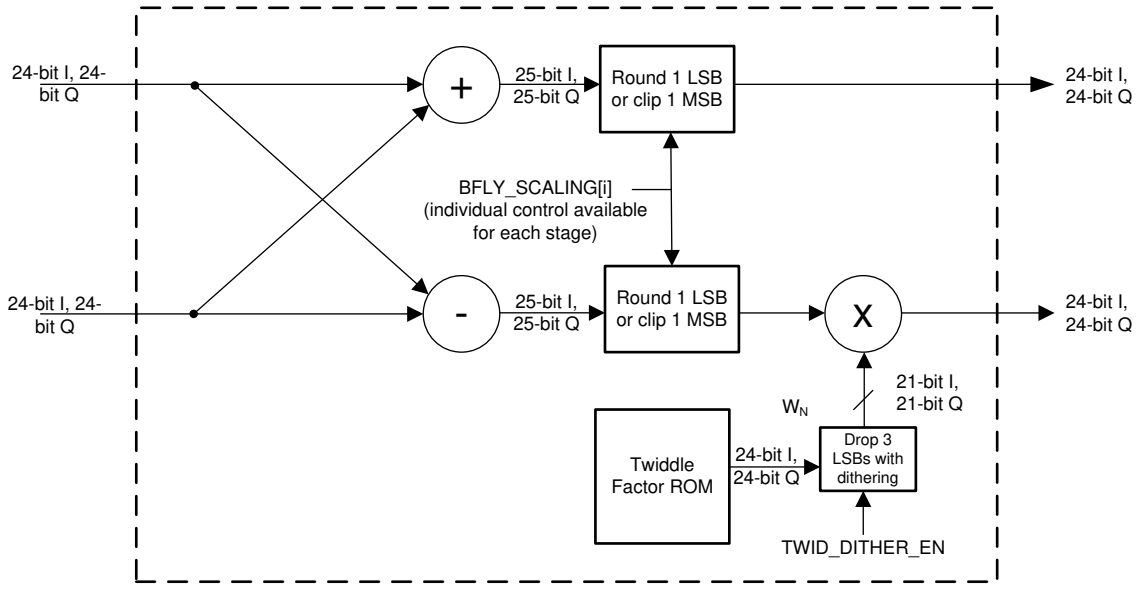

Figure 7-101. Butterfly Stage Fixed-Point

The twiddle factors are stored as 24-bit I and 24-bit Q coefficients. Prior to twiddle factor multiplication, the coefficients are reduced to 21-bit I and 21-bit Q by dropping three LSBs (with optional dithering). The purpose of dithering is to eliminate any repetitive quantization noise patterns from degrading the SFDR of the FFT. The use of dithering here is optional. For dithering, an LFSR is used to generate a random pattern, for which the LFSR seed must be loaded with a non-zero value (see LFSRSEED in the register descriptions).

The SFDR performance of the FFT, with dithering enabled, is better than –140 dBc, as shown in Figure 7-102.

Copyright © 2025 Texas Instruments Incorporated

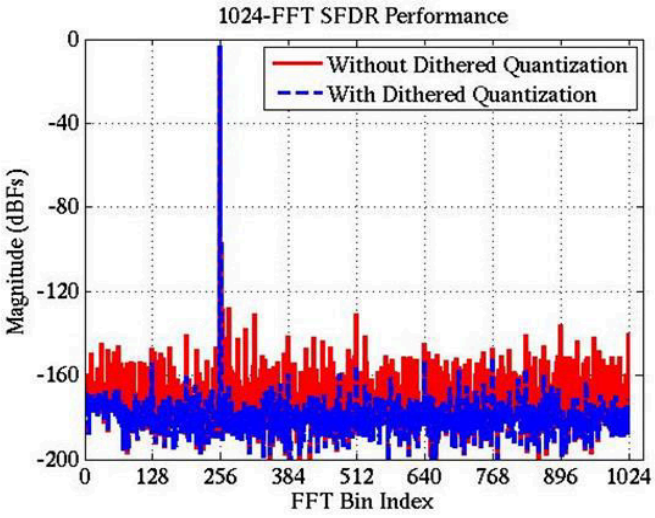

Figure 7-102. FFT SFDR Performance With and Without Dithering

The architecture of the FFT is such that it can take a streaming input (one sample per clock) and produce a streaming FFT output (one sample per clock), in steady-state. There is an initial latency of approximately *FFT size* number of clocks. This latency only comes into picture once for a given parameter set. Within a parameter set, multiple FFT iterations can be performed back-to-back (for example, for four RX) with no additional latency between iterations.

Because the implementation uses 400MHz clock in the device, a 256-point complex FFT for four RX chains would take 256 + 256 × 4 clock cycles to complete, which corresponds to 3.2 µs (plus a few clocks of implementation latencies, which are not accounted here since it is negligible). Table 7-86 lists the approximate computation time needed for various FFT sizes.

Table 7-86. FFT Computation Time

Example	FFT Size	Number of Back-to-Back Iterations	Number of Clock Cycles (Initial latency + Computation)	Total Duration
1	256	4	256 + (256 × 4)	3.2 µs
2	128	4	128 + (128 × 4)	1.6 µs
3	8	64	8 + (64 × 8)	1.3 µs

The output of the FFT can be fed to the output formatter or it can be sent to the magnitude/log-magnitude computation subblock.

Note

The FFT is a complex FFT implementation. If the input samples are real-only, then the SRCREAL register bit can be set, such that the imaginary part (Q-part) will be forced to zero by the input formatter block.

7.4.5.1.6 Advanced FFT Features – FFT Stitching

FFT Engine additionally allows the computation of 4096 & 8192-point FFTs by using FFT stitching. This is done in two-passes. In the first pass, 2 or 4 sets of 2048-point FFT are computed. In the next pass, 2048 sets of 2-point or 4-point FFTs are computed with appropriate twiddle pre-multiplications using the complex multiplier in mode 3 (described in part 2 of user guide) yielding the final 4096 or 8192-point FFT. The relevant register (CMULT_MODE, TWIDINCR, WINDOW_INTERP) settings are indicated in table below A detailed example of FFT stitching along with window interpolation is provided in HWA 2.0 Examples document.

Copyright © 2025 Texas Instruments Incorporated

Table 7-87. FFT Stitching Registers

FFT Size	CMULT_MODE	TWIDINCR	WINDOW_INTERP
4096	3	1	2
8192	3	2	1

7.4.5.1.7 Advanced FFT Features – 2D FFT

The traditional approach for realizing an M×N point 2-D FFT involves two passes: first pass computing M number of N-point FFTs on the input arrays, and then a second pass computing N number of M-point FFTs on the result of the first pass. HWA instead supports a direct and faster computation of M×N 2-D FFT, for small M×N sizes (M×N≤2048, N being a power of 2).

The following illustrates the necessary programming for an example with M=16 and N=4. The register FFT_SIZE should be set to , and the register FFT_SIZE_DIM2 should be set to . Further the M×N samples of input data should be placed in the memory and fed sequentially to the FFT engine in an interleaved manner as follows. If A is the 2-D 16×4 size input array for the 2-D FFT, then the data placement should ensure that the FFT engine's input order is $A_{0,0}$, $A_{0,1}$, $A_{0,2}$, $A_{0,3}$, $A_{1,0}$, $A_{1,1}$, $A_{1,2}$, $A_{1,3}$, $A_{2,0}$, $A_{2,1}$, …, $A_{15,0}$, $A_{15,1}$, $A_{15,2}$, $A_{15,3}$. The FFT engine computes the 2-D FFT results, and automatically stores them in the destination memory in the right order. The output memory contents would be linear order: $B_{0,0}$, $B_{0,1}$, $B_{0,2}$, $B_{0,3}$, $B_{1,0}$, $B_{1,1}$, $B_{1,2}$, $B_{1,3}$, $B_{2,0}$, $B_{2,1}$, …, $B_{15,0}$, $B_{15,1}$, $B_{15,2}$, $B_{15,3}$, where B represents the 2D FFT of A.

If zero padding is required in one or both dimensions, it can be achieved through the accelerator's zero insertion feature. It can be done by adding zeros at right locations in the M×N long linear array streaming into the FFT engine (subject to the 256 element limit in zero insertion feature). If 2-D windowing is required before the 2-D FFT, then the 2-D M×N window coefficients can be unrolled into one long linear array and placed in the window RAM. This is illustrated in the below figure for a 32×16 2-D FFT case. If 2-D FFT feature is enabled in any parameter set, it is recommended that the advanced 2D statistics feature be disabled in that parameter set.

This 2-D FFT feature can be used in performing small sized 2-D FFTs, repeatedly over several iterations (e.g. Azimuth × Elevation 2-D FFTs using A dimension, performed for multiple Doppler or Range bins using B dimension). The computation time for B iterations of M×N 2-D FFTs would be (B+1)×(MN) = BMN+MN. In comparison, the traditional two pass approach mentioned earlier, uses (BM+1)×N cycles for first pass (if first passes of all B iterations are performed together) and (BN+1)×M cycles for second pass, in total 2BMN+M+N.

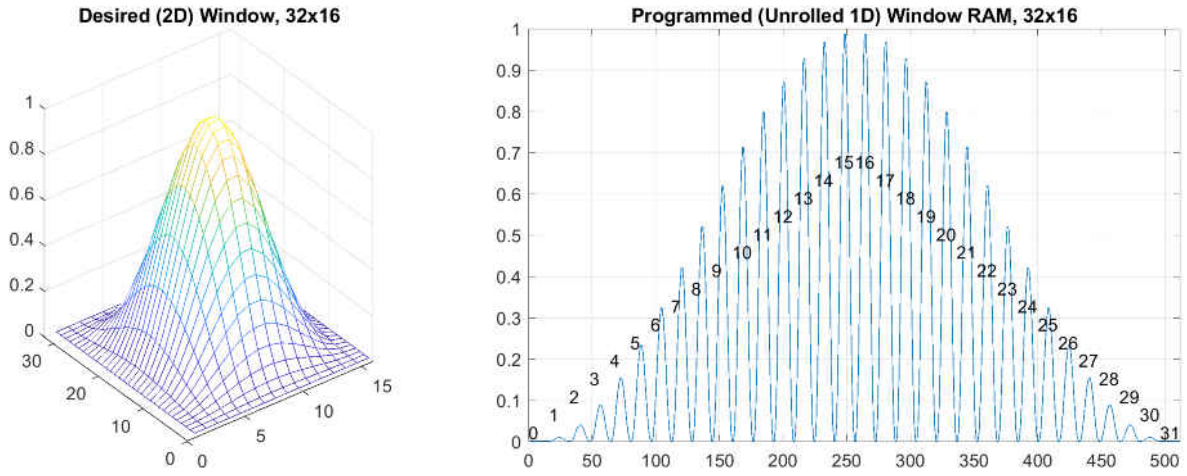

Figure 7-103. Unrolling 32x16 2D Array Window Coefficients to a 512 1D Vector for Placement in Window RAM

Copyright © 2025 Texas Instruments Incorporated

7.4.5.1.8 Core Computational Unit – FFT Engine – Magnitude and Log-Magnitude Post-Processing

The magnitude and log-magnitude post-processing block computes absolute value or log2 of the absolute value of its input. Because this block is connected to the output of the FFT engine, the computation of absolute value (and log2) can be directly performed on the streaming FFT output. Alternately, the FFT block can be bypassed and only the magnitude and log-magnitude block can be employed.

The processing in this block first involves computation of magnitude (absolute value) of the input samples in the magnitude subblock (using JPL approximation in HWA 2.0). The result of the magnitude computation is fed into a Log2 computation subblock, which uses a look-up table-based approximation to compute logarithm- base-2 of the magnitude.

As shown in Figure 7-99, if the register-bit ABS_EN is set, the magnitude computation subblock is enabled. In addition, if the register-bit LOG2_EN is set, then the Log2 computation subblock is also enabled. Note that setting LOG2_EN makes sense only when ABSEN is also set.

(1)

Figure 7-104.

In HWA 2.0, the magnitude computation uses JPL (Levitt and Morris) approximation. This approximation for magnitude of a complex number (I + jQ) is defined as follows, let U = max(|I|,|Q|) and V = min(|I|,|Q|). Then, the magnitude can be approximated as follows in Figure 7-105.

$$\text{Magnitude} \approx \max(U + V / 8, 7U / 8 + V / 2) \quad (2)$$

Figure 7-105.

The magnitude output is 24-bits wide (real number).

Next,the log2 computation of the magnitude value is achieved as follows. Any unsigned input number N can be written as N = 2k(1 + f) and the log2(N) can then be written as follows in Figure 7-106.

$$\log2(N) = k + \log2(1+f) \quad (3)$$

Figure 7-106.

The implementation of log2 computation uses the previous formula, where a look-up table approximation is used to generate the second term, for example, log2(1 + f). The accuracy of the log2 computation for HWA 2.0 is shown in #unique_143/unique_143_Connect_42_GUID-7ECD2969-36A1-45C6-8FA0-BF6818BB303F. The log2 output is 16-bits wide. The 16-bit logarithm output consists of 5 bits of integer part and 11 bits of fractional part.

Dependingon the settings of ABS_EN and LOG2_EN, either the magnitude or the log-magnitude is sent as the final output of the core computational unit. The final output of the core computational unit going to the output formatter is 24-bits I and 24-bits Q. Thus, if either magnitude or log-magnitude is enabled, the Q- values are just made zeros. Similarly, when log2 is enabled, because the output is 16-bits, 8 MSBs are filled as zero.

The outputformatter handles writing the samples to the destination memory as per the configured destination memory access pattern described in a previous section.

7.4.5.1.9 Core Computational Unit – FFT Engine – Register Descriptions

Table 7-88 lists all the registers of the FFT Engine within the core computational unit.

Copyright © 2025 Texas Instruments Incorporated

Table 7-88. FFT Engine Registers

Register	Width	Parameter Set	Description
WINDOW_EN	1	Yes	Windowing Enable: This register-bit enables or disables the pre-FFT windowing operation. If this register is set to 1, then the windowing is enabled, otherwise, it is disabled. The exact window function (coefficients) to be applied is specified in a dedicated Window RAM, which is 2048 × 32 bits in size.
FFT_EN	1	Yes	FFT Enable: This register-bit is used to enable the FFT computation. If FFT_EN = 1, then the FFT computation is enabled. Otherwise, it is disabled (bypassed).
ABS_EN	1	Yes	Magnitude Enable: This register-bit is used to enable the magnitude calculation. If this register bit is set, then the magnitude calculation is enabled, else it is bypassed. When enabled, the magnitude (absolute value) of the input complex samples are calculated using JPL approximation and the resulting magnitude value is sent on the I-arm of the output. The Q-arm is made zeros.
LOG2_EN	1	Yes	Log2 Enable: This register-bit is used to enable the Log2 computation. If this register bit is set, then the Log2 computation is enabled, else it is bypassed. Note that setting this register bit only makes sense if the inputs to the Log2 computation are unsigned real numbers, such as when the Magnitude Enable bit (ABS_EN) is also set. When enabled, the Log2 of the magnitude of the input samples is calculated and sent out on the I-arm of the output. The Q-arm is made zeros.
WINDOW_START	11	Yes	Windowing coefficients start location in Window RAM: This register specifies the starting location (32-bit word index) of the window coefficients within the Window RAM. The purpose of this register is to allow multiple windows (for example, one window of 512 coefficients and another window of 256 coefficients) to be stored in the Window RAM and one of these windows can be used by programming this start location register appropriately in the current parameter set.
WINSYMM	1	Yes	Window symmetry: This register-bit indicates whether the complete set of window coefficients are stored in the Window RAM or whether one half of the coefficients are stored. If this register bit is set, it means that the window function is symmetric and therefore, only one half of the window function coefficients are stored in the Window RAM. See the description section related to Windowing computation for more details.
WINDOW_MODE	2	Yes	Window Mode: 00b : 18-bit signed real coefficients, 01b: 16-bit signed real coefficients, 10b: 16-bit I, 16-bit Q complex coefficients
FFTSIZE	4	Yes	FFT size: This register indicates the number of FFT radix-2 butterfly stages employed. Refer detailed description section for more details on this register.
FFTSIZE3X_EN	1	Yes	FFT size 3X enable: This register indicates whether to engage the additional FFT radix-3 butterfly stage. Together with FFTSIZE, this register specifies the FFT size. This can be used to realize FFTs of length 3x2N point FFTs..
FFTSIZE_DIM2	4	Yes	2D FFT dimension specification: This register can be used to realize 2 dimensional FFTs. If this register is set to 0 (default), the FFT engine computes the usual one dimensional FFT. Otherwise, it computes a two dimensional FFT of size 2^(FFTSIZE–FFTSIZE_DIM2) x 2^FFTSIZE_DIM2.
BFLY_SCALING	12	Yes	Butterfly scaling for radix-2 stages: This register is used to control the butterfly scaling at each of the radix-2 butterfly stages. If the Nth bit in this register is set to 0, then the 25-bit output of the Nth radix-2 stage from the last is saturated to 24-bit. Otherwise it is scaled down by 2 and rounded to produce a 24-bit output.

Copyright © 2025 Texas Instruments Incorporated

Table 7-88. FFT Engine Registers (continued)

Register	Width	Parameter Set	Description
BFLY_SCALING_FFT3X	2	Yes	Butterfly scaling for radix-3 stage: This register is applicable only if FFTSIZE3X_EN is set to 1. This register is used to control the butterfly scaling in the 3-point FFT structure that precedes the powers-of-2 FFT structure. If this register is set to 0, then that 26-bit output after radix-3 stage is saturated at the MSB to get back to 24 bits. If it is 2, it is rounded to remove 2 LSBs to get back to 24 bits. A middle option exists by setting this to 1. In this case, the 26 bit temporary output is convergent-rounded to remove 1 LSB and the 25-bit output thus obtained is saturated to 24 bits.
DITHER_TWID_EN. dither_twid_en	1	No	Twiddle factor dithering enable: This register-bit is used to enable and disable dithering of twiddle factors in the FFT. The twiddle factors are 24-bits wide (24-bits for each I and Q), but they are quantized to 21-bits before twiddle factor multiplication. This quantization is implemented with dithering on the LSB, to avoid periodic quantization pattern affecting SFDR performance of the FFT. It is recommended to keep this register bit set to 1 (dithering enabled), with appropriate LSFR seed loaded.
LFSR_SEED. lfsr_seed	29	No	Seed for LFSR (random pattern): For twiddle factor dithering, there is an LFSR that is used, whose seed value is loaded by writing to this 29-bit LFSRSEED register. The LFSRSEED register should be set to any non-zero value, say 0x1234567. To load the LFSR seed, a pulse signal needs to be provided, by writing a 1 followed by a 0 (i.e., by setting and clearing) the LFSRLOAD register-bit.
LFSR_LOAD. lfsr_load	1	No	For twiddle factor dithering, there is an LFSR that is used, whose seed value is loaded by writing to this 29-bit LFSRSEED register. The LFSRSEED register should be set to any non-zero value, say 0x1234567. To load the LFSR seed, a pulse signal needs to be provided, by writing a 1 followed by a 0 (i.e., by setting and clearing) the LFSRLOAD register-bit.
FFT_CLIP.fft_clip	13	No	FFT Clip Status (read-only): This is a read-only status register, which indicates any saturation/clipping events that have happened in the FFT butterfly stages. Note that each of the individual butterfly stages in the FFT can be programmed to either saturate the MSB or round the LSB. Whenever saturation of MSB is used in any stage, there is a possibility that that stage can saturate or clip samples. In that case, this saturation event is indicated in the corresponding bit in this status register, so that the processor can read it. If multiple FFTs are performed, this status register includes any saturation events happening in any of them. This status register can only be cleared by any processor, by setting another single-bit register CLR_FFTCLIP, so that the saturation status indication gets cleared back to 0 and any subsequent saturation events can be freshly monitored. The MSB of this register indicates clip status corresponding to the radix 3 butterfly (note: it is the MSB, independent of the number of radix-2 stages engaged).
CLR_FFTCLIP.clr_fftclip	1	No	Clear FFT Clip Status register: This register bit, when set, clears the FFTCLIP register.
WINDOW_RAM[2048] DSS_HWA_WINDOW_RAM	32b each	No	This RAM stores the window co-efficients. Note that there is only one RAM and based on WINDOW_MODE, the samples are accordingly chosen as illustrated in Fig. 15
MEM_INIT_START. MEM_INIT_START_WINDOW_RAM	1	N	Writing 1'b1 would start the memory initialization for the window memory. This bit is self-clearing.

Copyright © 2025 Texas Instruments Incorporated

Table 7-88. FFT Engine Registers (continued)

Register	Width	Parameter Set	Description
ACCEL_MODE	3	Yes	Select Core Computational Unit Data Path: This register selects the data-path of the accelerator's core computational unit – for example, it selects which of the paths: the FFT engine path, or the CFAR engine path, or the compression/decompression path, or the local maxima engine path, or none is active. Value = 0b000: FFT engine path Value = 0b001: CFAR engine path Value = 0b010: Compression / decompression engine path Value = 0b011: Local Maxima engine path Value = 0b111: No Operation. The No Operation setting can be used together with an appropriate trigger mode to cause the state machine to wait for an event before moving to the next parameter-set.
WINDOW_INTERP_FRACTION CMULT_MODE TWIDINCR FFT_OUTPUT_MODE FFTSUMDIV MAX<n>_VALUE ISUM<n>, QSUM<n>	–	–	Described in sections starting from 28.7 of the TRM. For the immediate purposes relevant to this ection and above sections of HWA chapter, all of these registers should be kept as 0.

Copyright © 2025 Texas Instruments Incorporated

7.4.6 Parameter Set Layouts

The parameter-set register layout is provided below for all the accelerator modes. Note that the parameter-set RAM must be written using 32-bit word writes only (i.e., byte-writes and half-word writes are NOT supported).

ROW TITLE	S.No.	31	30	29	28	27	26	25	24	23	22	21	20	19	18	17	16	15	14	13	12	11	10	9	8	7	6	5	4	3	2	1	0
HEADER	0	CPU_INTR2_EN (1)	CPU_INTR1_EN (1)										FORCED_CONTEXTSW_EN (1)	CONTEXTSW_EN (1)	ACCEL_MODE (3)			HWA2DMA_TRIGDST (5)					DMATRIG_EN (1)		HWA_TRIGSRC (5)					TRIGMODE (4)			
SRC	1	SRCCONJ (1)	SRCIQSWAP (1)	SRCSIGNED (1)	SRC16b32b (1)	SRCREAL (1)	SHUFFLE_AB(2)			SRCSCAL(4)				SRCADDR (20)																			
SRCA	2	SRCACNT(12)												SRCAINDX (20)																			
SRCB	3	BCNT(12)												SRCBINDX (20)																			
SRCC	4	CCNT(12)												SRCCINDX (20)																			
CIRCSHIFT	5					SRCB_CIRCSHIFT(12)																SRCA_CIRCSHIFT(12)													
CIRCSHIFT2	6		SRC_CIRCSHIFTWRAP3X(2)		SRCA_CIRCSHIFTWRAP(4)				SRCB_CIRCSHIFTWRAP(4)																									
DST	7	DSTCONJ (1)	DSTIQSWAP (1)	DSTSIGNED (1)	DST16b32b (1)	DSTREAL (1)				DSTSCAL(4)				DSTADDR (20)																			
DSTA	8	DSTACNT(12)												DSTAINDX (20)																			
DSTB	9	DST_SKIP_INIT(12)												DSTBINDX (20)																			
RESERVED	10																																
BFLY_FFT	11			BFLY_SCALING_FFT3X (2)		BFLY_SCALING (12)												FFTSIZE (4)				FFTSIZE_DIM2 (4)			BPM_PHASE(4)				ZEROINSERT_EN(1)	FFTSIZE3X_EN (1)	BPM_EN (1)	FFT_EN (1)	
POST_PROCESSING_WINDOW	12	HIST_SCALE_SEL(4)				HIST_SIZE_SEL(4)					MAX2D_EN(1)	FFT_OUTPUT_MODE (2)		WINDOW_INTERP_FRACTION(2)		ABS_EN (1)	LOG2_EN (1)		WINDOW_MODE (2)		WINDOW_START (11)										WINSYM (1)	WINDOW_EN (1)	
PRE_PROCESSING	13	CMULT_MODE(4)				CMULT_SCALE_EN (1)	HIST_MODE(2)		INTF_MITG_CNT_THRESH (5)					INTF_MITG_EN (1)		INTF_MITG_PATH_SEL (2)			RECWIN_MODE(1)	INTF_STATS_RESET_MODE (2)		INTF_LOC_THRESH_SEL (2)	INTF_LOC_THRESH_MODE (2)		CHANCOMB_EN(1)	INTF_LOC_THRESH_EN(1		DCSUB_SEL (1)	DCEST_RESET_MODE (2)		DCSUB_EN(1)	
PRE_PROCESSING	14	INTF_MITG_LEFT_HYST_ORD (4)				INTF_MITG_RIGHT_HYST_ORD (4)														TWIDINCR(14)													
WRAP_COMB	15									SHUFFLE_INDX_START_OFFSET(4)				WRAP_COMB(20)																			

Figure 7-107. FFT Path Parameter Set Layout

Copyright © 2025 Texas Instruments Incorporated

ROW TITLE	S.No.	31	30	29	28	27	26	25	24	23	22	21	20	19	18	17	16	15	14	13	12	11	10	9	8	7	6	5	4	3	2	1	0
HEADER	0	CPU_INTR2_EN (1)	CPU_INTR1_EN (1)										FORCED_CONTEXTSW_E	CONTEXTSW_EN (1)	ACCEL_MODE (3)			HWA2DMA_TRIGDST (5)					DMATRIG_EN (1)		HWA_TRIGSRC (5)					TRIGMODE (4)			
SRC	1	SRCCONJ (1)	SRCIQSWAP (1)	SRCSIGNED (1)	SRC16b32b (1)	SRCREAL (1)	SHUFFLE_AB(2)			SRCSCAL(4)				SRCADDR (20)																			
SRCA	2	SRCACNT(12)												SRCAINDX (20)																			
SRCB	3	BCNT(12)												SRCBINDX (20)																			
SRCC	4	CCNT(12)												SRCCINDX (20)																			
CIRCSHIFT	5					SRCB_CIRCSHIFT(12)																SRCA_CIRCSHIFT(12)													
CIRCSHIFT2	6		SRC_CIRCSHIFTWRAP3X(2)		SRCA_CIRCSHIFTWRAP(4)				SRCB_CIRCSHIFTWRAP(4)																									
DST	7	DSTCONJ (1)	DSTIQSWAP (1)	DSTSIGNED (1)	DST16b32b (1)	DSTREAL (1)				DSTSCAL(4)				DSTADDR (20)																			
DSTA	8	DSTACNT(12)												DSTAINDX (20)																			
DSTB	9	DST_SKIP_INIT(12)												DSTBINDX (20)																			
RESERVED	10																																
CFAR_EN	11																					CFAR_OS_NONCYC_VA	CFAR_ABS_MODE (2)		CFAR_ADV_OUT_MO	CFAR_OUT_MODE (2)		CFAR_GROUPING_EN (1)	CFAR_CYCLIC (1)	CFAR_INP_MODE (1)	CFAR_LOG_MODE (1)	CFAR_CA_MODE (2)	
CFAR_CFG	12		CFAR_OS_KVAL(7)												CFAR_GUARD_INT (3)			CFAR_NOISEDIV (4)				CFAR_AVG_LEFT (6)					CFAR_AVG_RIGHT (6)						
RESERVED	13																																
RESERVED	14																																
RESERVED	15																																

Figure 7-108. CFAR Path Parameter Set Layout

Copyright © 2025 Texas Instruments Incorporated

ROW TITLE	S.No.	31	30	29	28	27	26	25	24	23	22	21	20	19	18	17	16	15	14	13	12	11	10	9	8	7	6	5	4	3	2	1	0
HEADER	0	CPU_INTR2_EN (1)	CPU_INTR1_EN (1)										FORCED_CONTEXTSW	CONTEXTSW_EN (1)	ACCEL_MODE (3)			HWA2DMA_TRIGDST (5)						DMATRIG_EN (1)		HWA_TRIGSRC (5)				TRIGMODE (4)			
SRC	1	SRCCONJ (1)	SRCIQSWAP (1)	SRCSIGNED (1)	SRC16b32b (1)	SRCREAL (1)	SHUFFLE_AB(2)			SRCSCAL(4)				SRCADDR (20)																			
SRCA	2	SRCACNT(12)												SRCAINDX (20)																			
SRCB	3	BCNT(12)												SRCBINDX (20)																			
RESERVED	4																																
RESERVED	5																																
RESERVED	6																																
DST	7	DSTCONJ (1)	DSTIQSWAP (1)	DSTSIGNED (1)	DST16b32b (1)	DSTREAL (1)				DSTSCAL(4)				DSTADDR (20)																			
DSTA	8	DSTACNT(12)												DSTAINDX (20)																			
DSTB	9	DST_SKIP_INIT(12)												DSTBINDX (20)																			
RESERVED	10																																
CMPDCMP	11	CMP_SCALEFAC (5)					CMP_EGE_OPT_K_INDX (4)				CMP_PASS_SEL(2)		CMP_HEADER_EN (1)	CMP_SCALEFAC_BW(4)				CMP_BFP_MANTISSA_BW (5)					CMP_EGE_K_ARR_LEN (4)				CMP_METHOD (3)			CMP_DCMP (1)	CMP_DITHER_EN(1)		
RESERVED	12																																
RESERVED	13																																
RESERVED	14																																
RESERVED	15																																

Figure 7-109. Compression Decompression Path Parameter Set Layout for HWA 2.0

SRCA	2	SRCACNT(12)												SRCAINDX (20)																			
SRCB	3	BCNT(12)												SRCBINDX (20)																			
SRCC	4	CCNT(12)												SRCCINDX (20)																			
CIRCSHIFT	5					SRCB_CIRCSHIFT(12)																SRCA_CIRCSHIFT(12)													
CIRCSHIFT2	6		SRC_CIRCSHIFTWRAP3X(2)		SRCA_CIRCSHIFTWRAP(4)				SRCB_CIRCSHIFTWRAP(4)																									
DST	7	DSTCONJ (1)	DSTIQSWAP (1)	DSTSIGNED (1)	DST16b32b (1)	DSTREAL (1)				DSTSCAL(4)				DSTADDR (20)																			
DSTA	8	DSTACNT(12)												DSTAINDX (20)																			
DSTB	9	DST_SKIP_INIT(12)												DSTBINDX (20)																			
RESERVED	10																																
LOCALMAX	11																			LM_DIMC_NONCYCLIC(1)	LM_DIMB_NONCYCLIC(1)	LM_THRESH_MODE(2)		LM_THRESH_BITMASK(2)		LM_NEIGH_BITMASK(8)							
RESERVED	12																																
RESERVED	13																																
RESERVED	14																																
VRAP_COMB	15									SHUFFLE_INDX_START_OFFSET(4)				VRAP_COMB(20)																			

Figure 7-110. Local Maxima Path Parameter Set Layout

Copyright © 2025 Texas Instruments Incorporated

7.4.7 FFT Engine – Pre-Processing

As explained in Part 1 of this chapter, the FFT Engine comprises pre-processing, windowing, FFT and Log-magnitude subblocks and these are stitched together one after the other in series (refer to Figure 7-111). This architecture allows multiple operations to be done in a streaming manner (for example, windowing and FFT can be done together), while at the same time, providing the user flexibility to choose one operation at a time. This section provides an overview of the pre-processing subblock inside the FFT engine of the core computational unit.

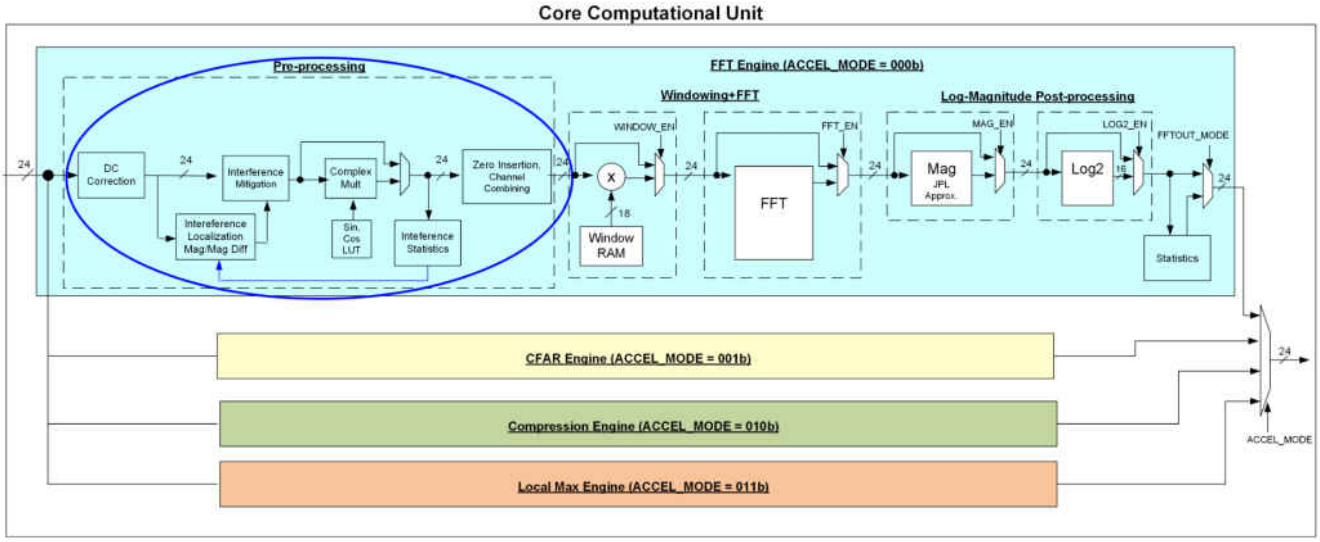

Figure 7-111. Core Computational Unit

The pre-processing subblock provides capability for DC estimation and correction, Interference localization and mitigation, complex multiplication, channel combining and zero-insertion.

7.4.7.1 DC Estimation

The DC estimation block estimates the time-domain average of the stream of samples along the A dimension. The stream can be one chirp, or set of chirps, i.e., frame. The DC is estimated on a per-iteration basis (i.e., along A dimension for each B iteration) for I & Q samples. Up-to 12 estimates corresponding to up to 12 iterations are available.

DC estimation is based on accumulation followed by a fine scaling and a programmable right shift. The fine scaling is configured as 1.8 value, via the 9-bit DCEST_SCALE register. The subsequent programmable right shift is configurable from 6 to 20 bits. Therefore, the DC estimation is well suited for cases where the number of samples per iteration is between 2^6 and 2^20. The fixed point details are captured in Figure 7-112. The internal accumulator reset supports several modes as shown in Table 7-89. For example, when DCEST_RESET_MODE = 2, the internal DC accumulators are reset at the beginning of the current parameter-set execution. Therefore, this mode estimates DC value for each set of SRCACNT samples along the A-dimension for up to 12 iterations along B-dimension within the current parameter-set. This mode is useful for per-chirp DC estimation. In this mode, the estimated DC values per iteration are latched at the end of current param-set and the accumulators are reset at the start. On the other hand, when DCEST_RESET_MODE = 3, the internal DC accumulators are reset only when the state machine executes the first loop of the parameter-set. As the state machine loops through various parameter-sets multiple times as programmed via NLOOPS register, the DC accumulators are not reset in between these loops. This mode is useful for per-frame DC estimation, where each loop corresponds to one chirp and the NLOOPS loops (chirps) correspond to a complete frame. The estimated DC values per iteration are latched at the end of last execution of the param-set.

The processor can read the DC estimates through the read-only registers – DCESTI_0VAL, .., DCESTI_11VAL & DCESTQ_0VAL, .., DCESTQ_11VAL. The DC estimates can also be used for DC subtraction described next.

Copyright © 2025 Texas Instruments Incorporated

Table 7-89. DC Estimation – Reset Modes

DCEST_RESET_MODE	Comments
0	Hold the DC internal accumulators without updating (bypass DC estimation).
1	DC estimation enabled, but free-running without automatic reset (i.e., not reset at the start of this parameter-set). In this mode, the software can reset the DC accumulators by writing to DC_EST_RESET_SW register bit.
2	Reset the DC internal accumulators at the start of this parameter-set. This mode is applicable for per-chirp DC estimation.
3	Reset the DC internal accumulators at the start of this parameter-set only if the loop-counter is 0. This mode is applicable for per-frame DC estimation.

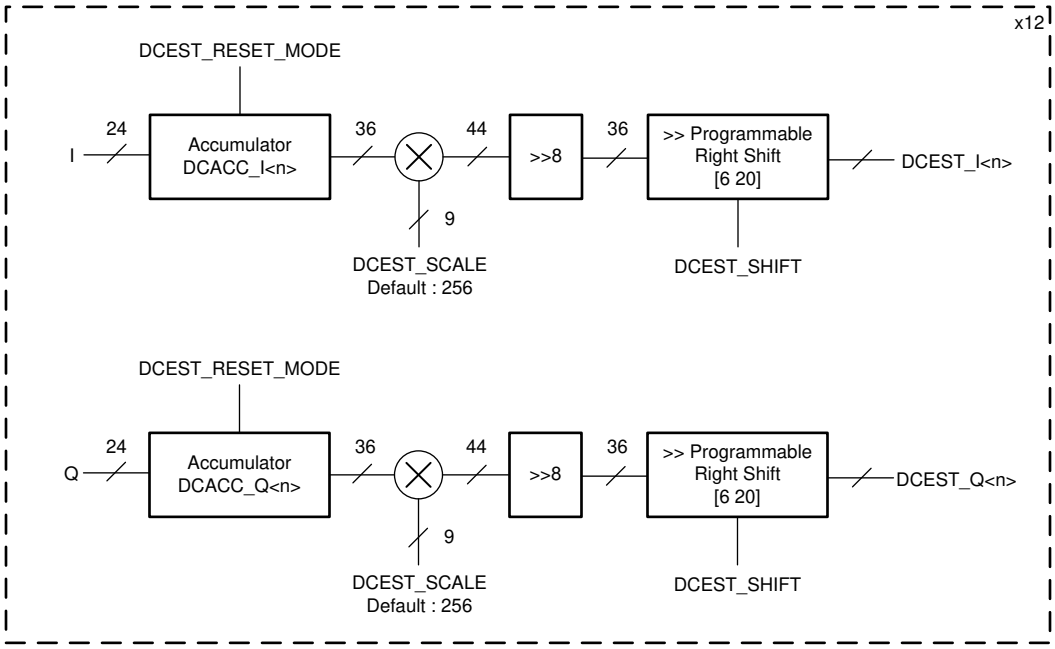

Figure 7-112. DC Estimation

7.4.7.2 DC Subtraction

The DC subtraction feature is enabled if the register DCSUB_EN is set to 1.

DC subtraction (see Figure 7-113) can use the output from the built-in DC estimation accumulators, or a user-programmed value, based on the register bit, DCSUB_SELECT. If DCSUB_SELECT is 1, the DC estimation based on the internal accumulators is used. If DCSUB_SELECT is 0, the software override values are used (they are given by DC_SW_I_<n> and DC_SW_Q_<n> for the nth iteration).

When using the built-in DC estimation accumulators, DC subtraction is performed on 12 individual streams corresponding to 12 RX on a per-iteration basis. Note that in a typical usage, for performing per-chirp DC estimation and DC subtraction, a two-pass approach is needed, where the first pass is configured for DC estimation via one parameter-set, and the second pass is configured for DC subtraction in the next parameter-set. Alternately, if a previous DC estimate (eg. From the previous chirp) is desired to be used for DC subtraction for the current chirp, then DC subtraction can be directly accomplished in one pass.

Copyright © 2025 Texas Instruments Incorporated

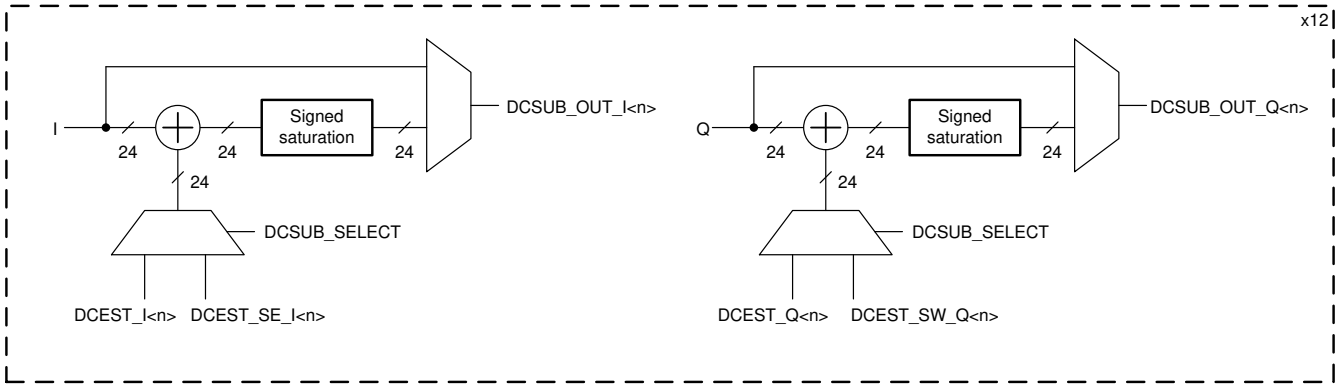

Figure 7-113. DC Subtraction

7.4.7.3 Interference Localization

In an FMCW radar transceiver, interference from another radar typically manifests itself as a time-domain spike in a few samples. This spike corresponds to the time duration when the chirping frequency of both radars overlap with each other. Such a time-domain spike caused by interference can lead to degradation in the noise floor at the FFT output, causing degradation in detection performance.

In order to mitigate the impact of interference, the pre-processing block provides capability to perform interference localization to identify samples corrupted by interference, followed by interference mitigation to repair those samples.

The INTF_LOC_THRESH_EN register is provided as part of the parameter-set to control when the interference localization should be enabled. When enabled, the input samples are fed through a magnitude calculation (based on JPL approximation), which computes a 24-bit magnitude of the 24-bit input complex sample. For definition of this approximation, see 28.5.1.8 of the TRM. Similarly, magnitude of the backward difference between adjacent samples is also computed, which is another useful metric for interference (glitch) detection.

Any sample whose magnitude and/or magnitude of backward difference exceeds thresholds THRESH_MAG<n> and THRESH_MAGDIFF<n> is considered as affected by interference and is marked by a corresponding Interference indicator Bit (IIB). This is supported individually for up to 12 iterations. Note that the IIB bit is just an internal signal that is set by the interference localization module, in order to mark samples for the interference mitigation module (described later). The register, INTF_LOC_THRESH_MODE determines the logic to set the IIB bit using the magnitude and/or magnitude of difference estimates. Based on this register, samples are marked with IIB if they exceed the THRESH_MAG<n>, or THRESH_MAGDIFF<n>, a logical AND of both, a logical OR of both as shown in Figure 7-114.

This applies across all iterations.

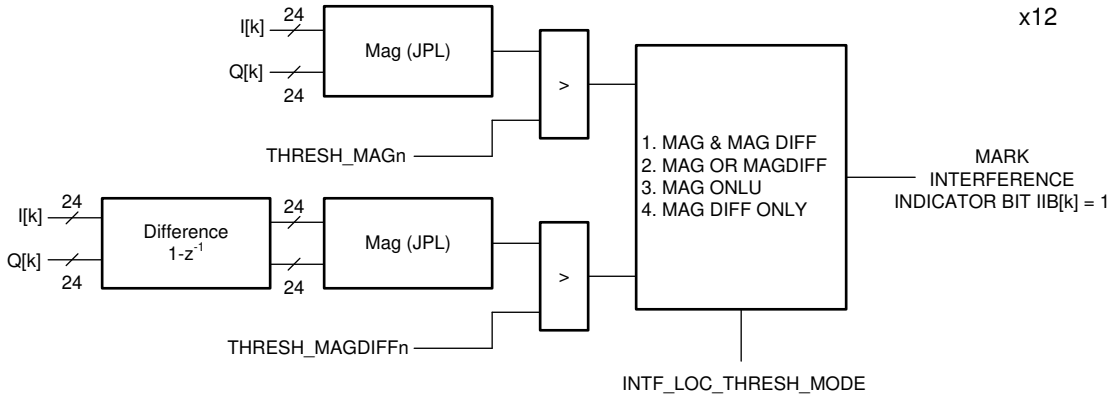

Figure 7-114. Interference Localization

Copyright © 2025 Texas Instruments Incorporated

The threshold values of THRESH_MAG<n> and THRESH_MAGDIFF<n> applied on a per-channel basis can derived from SW – INTF_LOC_THRESH_MAG<n>_SW, INTF_LOC_THRESH_MAGDIFF<n>_SW or from a built-in Interference statistics block – INTF_LOC_THRESH_MAG<n>, INTF_LOC_THRESH_MAGDIFF<n> as described in the next section. The user can also choose to sum the built-in interference statistics estimates across all channels to derive a common interference threshold across all iterations– INTF_STATS_SUM_MAG, INTF_STATS_SUM_MAGDIFF. The register, INTF_LOC_THRESH_SELECT is used to select these threshold options.

The number of samples marked with IIB across the iterations is recorded in the read-only registers, INTF_LOC_COUNT_ALL_CHIRP and INTF_LOC_COUNT_ALL_FRAME. This can be read after every chirp or after the completion of a frame (when the state machine completes all the programmed parameter-set loops and enters idle state).

7.4.7.4 Interference Statistics

This block (see Figure 7-115) provides the thresholds for interference localization. In order to obtain the interference statistics and derive the thresholds, the magnitude and magnitude of backward difference of the incoming samples are accumulated per iteration and up to 12 such independent accumulations are supported. These registers can be reset on a per-chirp or per-frame basis, and the behavior can be controlled using the register INTF_STATS_RESET_MODE. These reset modes are similar to DCEST_RESET_MODE previously explained (refer to Table 7-89). The interference statistics accumulators can be reset by software via writing the INTF_STATS_RESET_SW register bit. This reset also clears the INTF_LOC_COUNTS.

The determination of interference threshold for interference localization is based on taking the above accumulator values and applying a programmable fine scaling, followed by a programmable right shift. The fine scaling is configured via 8-bit registers, INTF_STATS_MAG_SCALE and INTF_STATS_MAGDIFF_SCALE in 5.3 format. The fine scaling value is interpreted as an unsigned 8-bit number with 5 integer bits and 3 fractional bits giving a scale in range [0 to 31.875]. The default value of this register is 8, applying a scaling of 1.0. The programmable right-shift in the range of 6 to 12 is applied via the registers, INTF_STATS_MAG_SHIFT and INTF_STATS_MAGDIFF_SHIFT respectively. Note that if the sum mode of threshold selection is made, then the shift values have to include the extra division based on number of iterations being summed.

The resulting values INTF_LOC_THRESH_MAGn and INTF_LOC_THRESH_MAGDIFFn are used as thresholds in the interference localization block as described in the previous section.

Copyright © 2025 Texas Instruments Incorporated

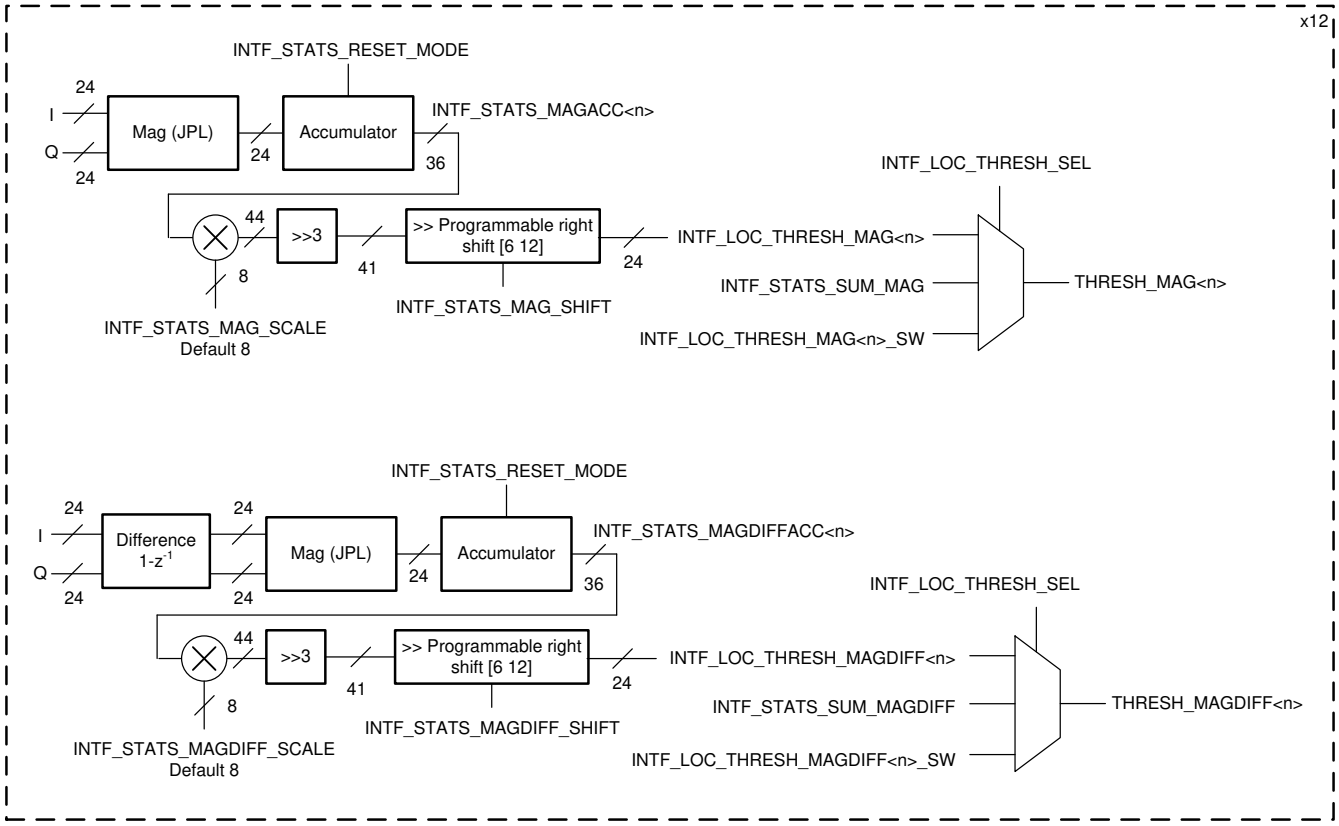

Figure 7-115. Interference Statistics

7.4.7.5 Interference Mitigation

Interference mitigation block (Figure 7-116) uses the results of Interference Localization block and mitigates the interference affecting the input samples which are marked as interference-corrupted through the Interference Indicator Bit. Interference mitigation is applicable for max. 12 iterations

The interference mitigation feature can be enabled by setting the INTF_MITG_EN bit in the parameter-set.

The first sub-module of the Interference Mitigation Block is a hysteresis module, which provides de-bouncing logic. For each incoming sample, its own IIB bit, as well as INTF_MITG_RIGHT_HYST_ORD number of right IIB bits and INTF_MITG_LEFT_HYST_ORD number of left IIB bits are considered in order to decide whether that particular sample is actually affected by interference. If the number of IIB bits in that interval is greater than or equal to INTF_MITG_CNTTHRESH, then that sample is assumed to be affected by interference. Thus, the hysteresis module outputs a filtered version of the IIB bit stream, which is then used for interference mitigation.

There are three different options (Figure 7-117) for interference mitigation and one of these can be selected using the INTF_MITG_PATH_SEL register. If INTF_MITG_PATH_SEL = 0, then the interference mitigation block simply zeros out samples that are marked with the IIB bit. This is a simple form of interference mitigation.

Copyright © 2025 Texas Instruments Incorporated

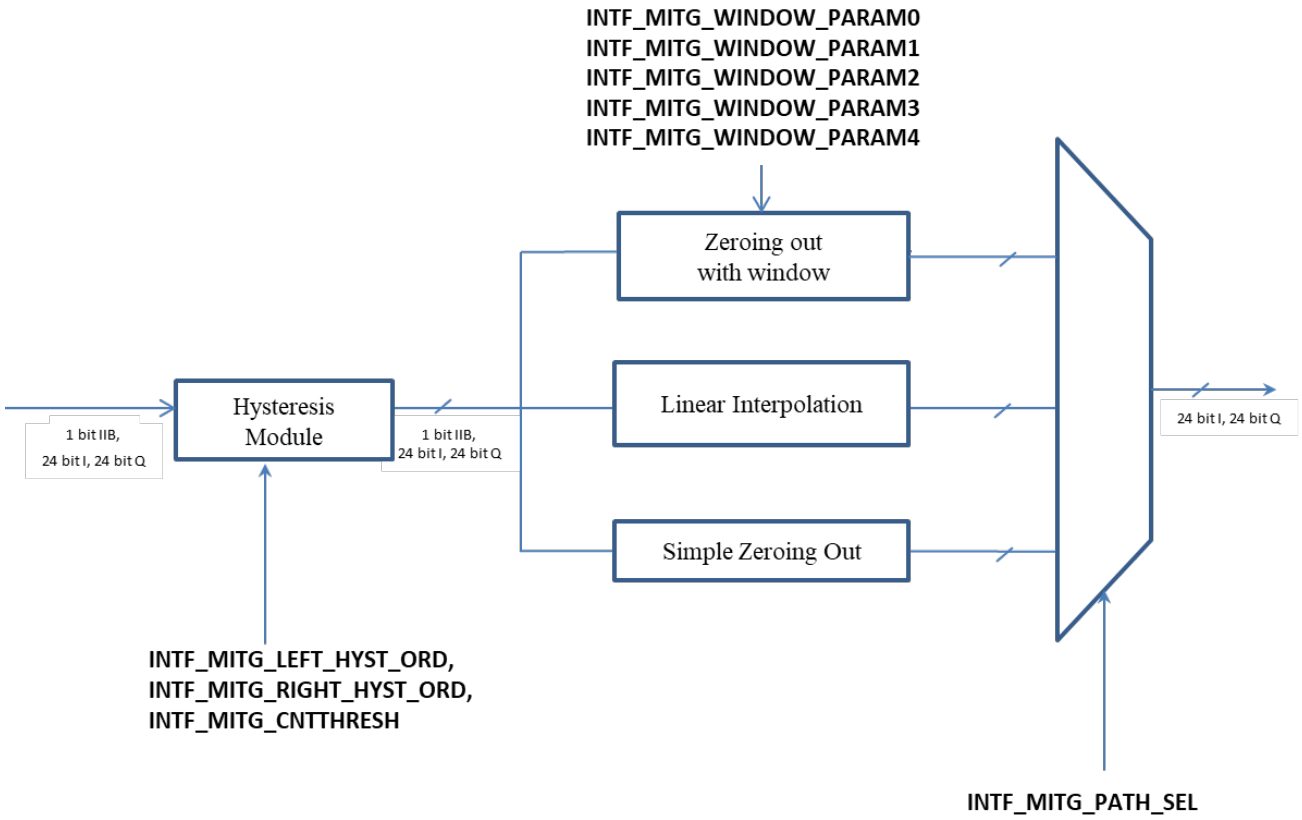

Figure 7-116. Interference Mitigation Block

Copyright © 2025 Texas Instruments Incorporated

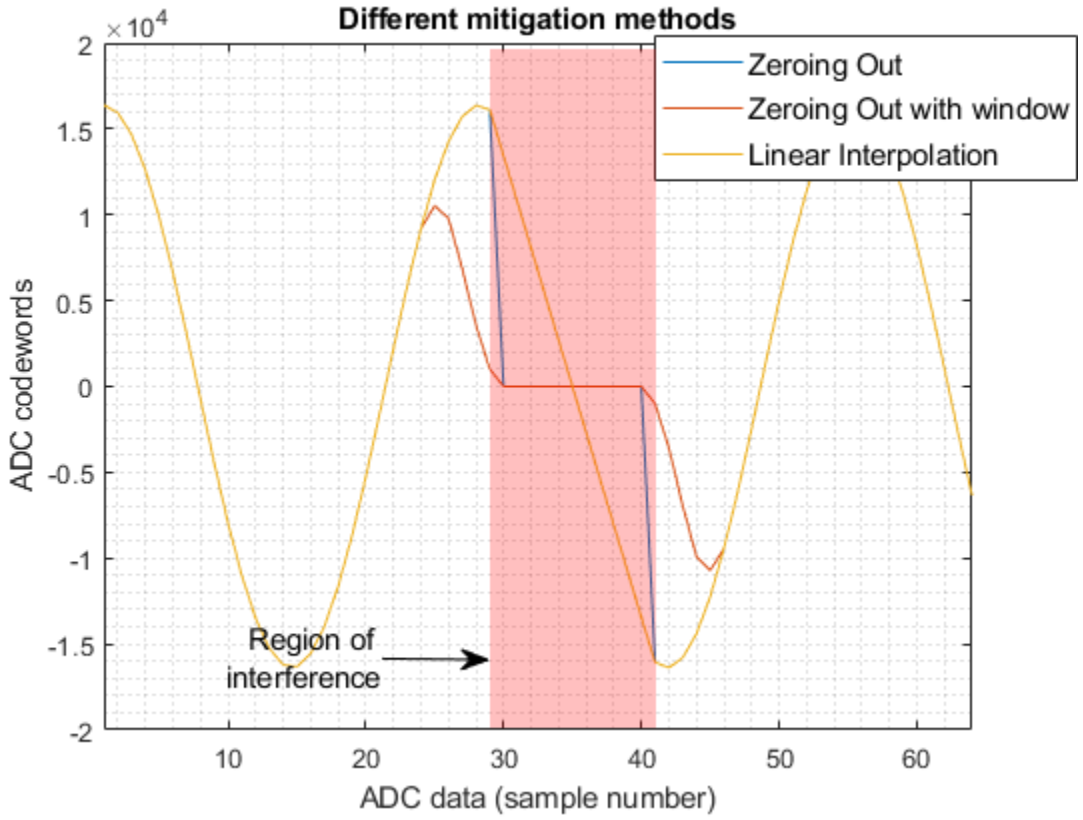

Figure 7-117. Interference Mitigation Methods

If INTF_MITG_PATH_SEL = 1, then the interference mitigation block performs a windowed zero-out, where a smoothing window is applied to the edge samples of the interference-affected set of samples, in order to reduce the side-lobe increase that can happen with abrupt windowing. The windowing function that is applied is programmable via the INTF_MITG_WINDOW_PARAM <n> registers. The manner in which this smoothing window is applied is as follows.

Assume that the input sample array is: [x[0], x[1], x[2], x[3], x[4], x[5], x[6], x[7], x[8], x[9], x[10]]. Assume that the IIB array input is of the form [0, 0, 0, 0, 0, 1, 1, 0, 0, 0, 0]. (In other words, the 6th and 7th samples are corrupted by interference.) Then, the output of the windowed zero-out module would be:

[x[0]w[4], x[1]w[3], x[2]w[2], x[3]w[1], x[4]w[0], 0, 0, x[7]w[0], x[8]w[1], x[9]w[2], x[10]w[3]].

Where w[n] = INTF_MITG_WINDOW_PARAM<n>.

Note that the samples that are affected by interference are always zeroed out. The window is applied on the neighbours of these samples, so as to smoothen the transition to zero.

If INTF_MITG_PATH_SEL = 2, then the interference mitigation block performs a linear interpolation between the two good (i.e., non-interference-affected) samples at the start and end of the interference affected set of samples and this linear interpolation procedure is used to replace the interference affected samples themselves. The number of interference affected samples between these good samples can be any number. However, if it exceeds 32, then the ‘last good sample’ is pushed out in the place of affected samples until a new good sample arrives. Then linear interpolation will be performed across the 32 remaining affected samples.

7.4.7.6 Complex Multiplication

In addition to interference zero-out, the pre-processing block contains a complex multiplication sub-block. The purpose of this sub-block (Figure 7-118) is to enable several assorted capabilities that require complex multiplication of the input samples. The CMULT_MODE register is used to enable and configure the complex

Copyright © 2025 Texas Instruments Incorporated

multiplication functionality. The complex multiplication sub-block can be disabled (bypassed) by the setting CMULT_MODE to 0b0000.

There are nine modes of the complex multiplier supported as follows. They are frequency shifter mode, frequency shifter with auto-increment mode (a slow DFT mode), FFT stitching mode, magnitude squared mode, scalar multiplication mode, vector multiplication modes-1 & 2, recursive windowing and LUT based frequency shifter modes.

Inall the nine modes of the complex multiplier, one complex multiplication is performed every clock cycle.

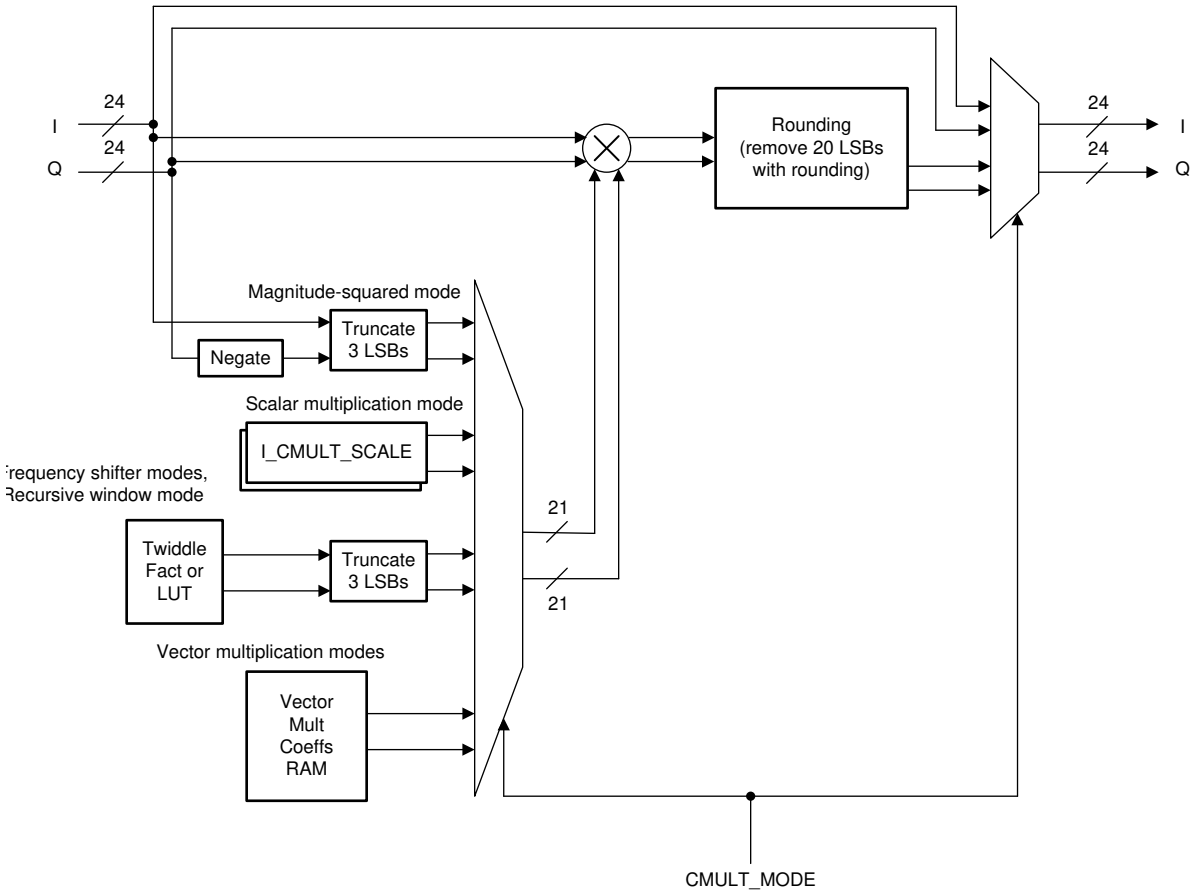

Figure 7-118. Complex Multiplication Capability in Pre-Processing Block

- **Frequency shifter mode**: If the register value is CMULT_MODE = 0001b, then the complex multiplier functions as a frequency shifter, which can be used to de-rotate the input samples by a certain frequency. This de-rotation is accomplished using cos, sin values from a twiddle factor look-up table (LUT). This LUT contains the (compressed) equivalent of the cos, sin values corresponding to the 16384 long sequence exp(–j*2*pi*(0:16383)/16384). TWIDINCR is used to specify the de-rotation frequency, by specifying how much the phase should change for each successive input sample (that register controls how much the LUT read index increments every sample) as shown in (Figure 9). The starting phase in this mode is always zero, since the 20-bit accumulator always starts at zero for each iteration.

  Note that although the figure shows another TWIDINCR_DELTA_FRAC register (portions shown in the red dotted box), that functionality is only applicable for CMULT_MODE = 1010b described later and it is not applicable in the present complex multiplier mode (0001b).

Copyright © 2025 Texas Instruments Incorporated

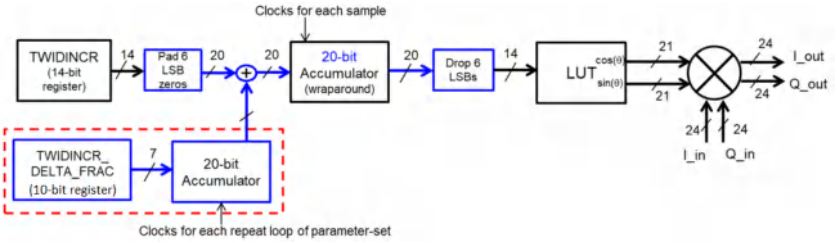

Figure 7-119. Frequency Shifter Mode

- **Frequency shifter with auto-increment mode (a slow DFT mode)**: If the register value is CMULT_MODE = 0010b, then the complex multiplier functions in a mode which enables Discrete Fourier Transform (DFT) computation. In this case, the complex multiplier performs a function that is very similar to frequency shifter mode, except that, at the end of each iteration, the de-rotation frequency is automatically incremented for the next iteration. Note that DFT computation for a given set of input samples involves de-rotating the samples by one frequency at a time, and computing a sum of the de-rotated samples for each such frequency. To achieve DFT computation, the Input Formatter should be configured to send the same set of input samples to the complex multiplier for multiple iterations (as many as the number of DFT bins required) and the complex multiplier de-rotates the samples by one frequency at a time and auto-increments to the next frequency for the next iteration. Also, the statistics block (explained in a later section) is used to compute the sum of the de-rotated samples corresponding to each iteration, which then becomes the final DFT value.

  The DFT computation is 'slow' in the sense that in each clock cycle, only one complex multiplication is performed. For example, for a 512-point input sample set, it would take 512 clock cycles per DFT bin. However, since the DFT mode is typically only used for FFT peak interpolation (very few bins), it is acceptable. The starting frequency for the DFT computation is specified in the TWIDINCR register (similar to the frequency shifter mode). The increment value by which the frequency increments every iteration is obtained from FFTSIZE register – Note that the DFT mode cannot be used simultaneously with FFT enabled, hence the FFTSIZE register has been over-loaded for providing the increment value in this mode. The increment value is calculated as 2^(14 – FFTSIZE) and hence the DFT resolution is 16384/2^(14 – FFTSIZE) = 2^FFTSIZE. As an example, if FFTSIZE = 1011b, then the DFT resolution is 2048. This is equivalent to computing DFT points corresponding to 2K size FFT grid. The highest resolution for the DFT would be obtained when FFTSIZE = 1110b (max allowed value), in which case the DFT resolution is 16384 (corresponding to 16K size FFT grid). In effect, for the kth iteration (with k starting from 0), the input samples x(n) for n = 0 to SRCACNT-1 are multiplied by the sequence, exp(–j*2*pi*(TWIDINCR+2^(14-FFTSIZE)*k)*(0:SRCACNT-1)/16384).
- **FFT Stitching mode**: If the register value is CMULT_MODE = 0011b, then the complex multiplier functions in FFT stitching mode. This mode is useful when large size FFTs (4K and 8K) are required. Since the FFT block natively supports only up to 2048 size, for 4096 and 8192 point FFT, an FFT Stitching procedure using two steps (two parameter-sets) can be used. As an example, when an 8K size FFT is needed, it is achieved in two steps as follows. In the first step, every 4th input sample is passed through a 2K size FFT (four 2K point FFTs are performed on decimated input samples). Then, in the next step, the resulting 4x2048 FFT outputs are sent through four-point "stitching" FFTs (2048 four- point FFTs), with an additional pre-multiplication by the complex multiplier block to achieve FFT stitching. This pre-multiplication uses the twiddle factor LUT in a specific pattern, for which additional configuration information is available in 2 LSBs of TWID_INCR register. Value '01' is for 4K (2x2048) size FFT stitching. If '10', then the twiddle factor pattern will correspond to what is required for 8K (4x2048) size FFT stitching. In the FFT stitching mode of operation, the 12 MSBs of TWID_INCR must be kept as 0.

  The last section includes a more detailed explanation and configuration information for the FFT stitching example for 4K and 8K FFT, including the use of WINDOW_INTERP_FRACTION register for extending the window RAM using linear interpolation to more than 2048 coefficients. Note that Window Symmetry and Interpolation modes can't be used simultaneously.
- **Magnitude squared mode**: If the register value is CULT_MODE = 0100b, then the complex multiplier functions in magnitude squared mode. In this case, the complex multiplier takes a complex input and

Copyright © 2025 Texas Instruments Incorporated

produces the magnitude squared as the output. This can be used together with the statistics block (explained in Section 3) to compute the mean squared sum of the input samples.

- **Scalar multiplication mode**: This mode is selected by setting CMULT_MODE = 0101b. It supports two options – multiplication by a complex scalar that remains constant across all iterations or by a complex scalar that changes per iteration.

  If the register bit CMULT_SCALE_EN = 0, then the complex multiplier functions in constant scalar multiplication mode. This feature is useful if the input samples need to be scaled by some constant factor. In this case, the complex multiplier will multiply each input sample with a 21-bit scalar complex number that is programmed in ICMULT_SCALE0 and QCMULT_SCALE0 registers (for I and Q value, each having 21 bits). The ICMULT_SCALE0 and QCMULT_SCALE0 registers are common registers and not part of parameter-set.

  To multiply the input samples for different iterations (channels) with different complex scalars, set CMULT_SCALE_EN = 1. In this mode, upto 12 different complex scalars are supported, viz. from ICMULT_SCALE0, QMULT_SCALE0 to ICMULT_SCALE11, QMULT_SCALE11 that are used for multiplication per iteration. TWID_INCR Register has no implication in this mode.
- **Vector multiplication mode 1**: If the register value is CMULT_MODE = 0110b, then the complex multiplier functions in vector multiplication mode 1. The purpose of this mode is to enable element-wise multiplication of two complex vectors, as well as dot-product capability (using statistics block to sum the element-wise multiplication output). The samples from the Input Formatter block constitute one of the two vectors, whereas the other vector is taken from a pre-loaded 'Vector Multiplication Coefficient RAM' inside the core computational unit. This Vector Multiplication Coefficient RAM can store 1024-complex samples and hence the vector multiplication can support a maximum of 1024 elements of multiplication. The Vector multiplication is not a highly parallelized operation, in the sense that only one complex multiplication is done per clock cycle. Note that the vector multiplication coefficient RAM should ideally be pre-programmed once upfront, and should not normally be re-programmed dynamically when the hardware accelerator is in active execution. If such a dynamic re-programming is required, then it can only be done when CMULT_MODE is set to 0b0000. For any other value of the CMULT_MODE register, the Vector multiplication coefficient RAM access is locked and hence cannot be re-programmed.

  The operation of the vector multiplication mode 1 is as follows. The streaming set of samples from the Input Formatter block is element-wise multiplied with successive samples from the Vector Multiplication Coefficient RAM. The statistics block (described in a later section) can be used to compute the sum for every iteration, which enables a dot-product implementation if desired. At the end of every iteration, the addressing from the Vector Multiplication Coefficient RAM is reset, so that for the next iteration, the samples are picked up from the start index of the Vector Multiplication Coefficient RAM. It is possible to choose a non-zero start address for the Vector Multiplication Coefficient RAM, by programming the TWID_INCR register. The top 12 MSBs of the TWID_INCR register functions as a sample address offset for the RAM. The 2 LSBs must be kept zero. For example, if TWID_INCR = 20, then the vector multiplication happens starting from the 5th coefficient in the RAM (zero-based count).

  When the size of vectors is small (<=12 coefficients), this mode can also be realized by setting the bit CMULT_SCALE_EN = 1 and programming ICMULT_SCALE0, QCMULT_SCALE0 to ICMULT_SCALE11, QCMULT_SCALE11 registers to store the successive coefficients. This mode can be used for example in RX channel gain and phase mismatch equalization. Because these ICMULT_SCALE<n> and QCMULT_SCALE<n> registers are independent of the Vector Multiplication Coefficients RAM, the user can use the RAM approach for some parameter-set which may need vector multiplication coefficients up to 1024, while another parameter-set of the processing chain uses the registers approach.
- **Vector multiplication mode 2**: If the register value is CMULT_MODE = 0111b, then the complex multiplier functions in vector multiplication mode 2, which is slightly different from the earlier Vector multiplication mode 1. The only difference in this case is that at the end of every iteration, the addressing of the Vector Multiplication Coefficient RAM is not reset, so that for the next iteration, the samples from the Vector Multiplication Coefficient RAM are picked up with an address that continues from where it left off at the end of the previous iteration. This mode can be used when a given set of input samples needs to be element-wise multiplied with multiple vectors. In this case, the input formatter block can be configured to repeat the same set of samples for multiple iterations, and the Vector Multiplication Coefficient RAM can be loaded with all the

Copyright © 2025 Texas Instruments Incorporated

vectors, such that for successive iterations, the input samples are multiplied with successive vectors. As in previous mode, TWID_INCR functions as an address offset for the RAM.

- **Recursive windowing mode** (next Figure) is supported using CMULT_MODE = 1000b. In this mode, a set of possibly random phase values θ(n) is stored in an internal RAM. This internal RAM is shared with the Vector Multiplication Coefficient RAM, in the sense that each of the *θ(n) values takes up one coefficient location in the Vector Multiplication Coefficients RAM, and therefore use of Recursive Windowing mode comes at the expense of reduced number of coefficients storage for the other vector multiplication modes. For the purpose of recursive windowing the vector multiplication RAM must be programmed with appropriate values and it is as shown below:
  - If θ is in degrees, the corresponding code to be programmed in the RAM is (θ/360) *2^16
  - If θ is in radians, the corresponding code to be programmed in the RAM is (θ /(2*pi)) *2^16

  The operation of Recursive Windowing mode is explained as follows.

  Assuming that the Window RAM (which is separate) contains the window coefficients w0(n), the final window function is computed as: Wk(n) = W0(n) * exp(– j*K*θ(n)*2*pi/16384). This computed window function Wk(n) is used for the windowing prior to FFT operation. Here K is either the iteration count (zero-based count corresponding to B-dimension iterations) within the parameter-set, or the current execution count of the parameter-set where CMULT_MODE = 0b1000. This selection can be made using the register bit, RECWIN_MODE_SEL. A value of RECWIN_MODE_SEL = 0 indicates k is based on iteration count, and RECWIN_MODE_SEL = 1 indicates it is based on the said execution count. When REC_WIN_MODE_SEL = 0, the value of K resets to zero at the end of all iterations of the current parameter-set. On the other hand, when REC_WIN_MODE_SEL = 1, the value of k persists (and increments) across multiple loops of the parameter-set and it can be reset via software by writing to the register bit RECWIN_RESET_SW.

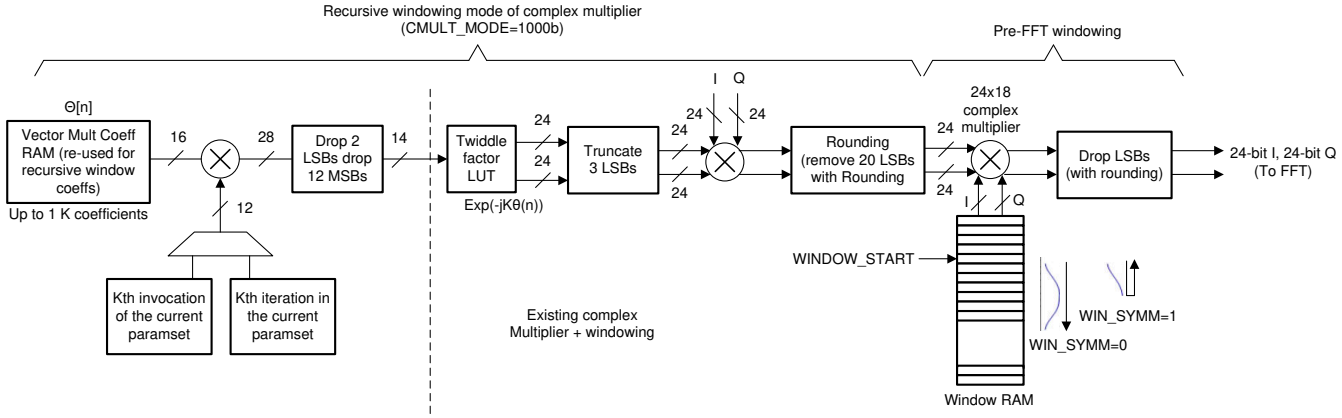

Figure 7-120. Recursive Windowing using the Complex Multiplier

- **LUT based frequency and phase de-rotation mode**: This mode is enabled using CMULT_MODE = 1001b. This mode is similar to Frequency shifter mode (previously explained, where CMULT_MODE = 0001b), except that it supports both frequency de-rotation and phase de-rotation based on a programmable RAM, TWID_ANGLE_RAM. Up to store 64 different frequency de-rotation and starting phase values can be programmed. Each entry in the RAM is 32 bits wide. The 16 MSBs contain starting phase word – TWID_PHA and in remaining 16 LSB, the top-most two bits are don't cares, the next 14 LSBs contain the de-rotation frequency word. The 6 LSBs of TWIDINCR register are used as a start address index to the TWID_ANGLE_RAM.

  There are two sub-modes of this feature, selectable by bit 13 of TWIDINCR register. If this bit set to 1 (Auto-increment mode), then the RAM index is incremented automatically after each iteration (i.e., B dimension), else (Non-increment mode), the RAM index is constant for all iterations, based on the 6 LSBs of TWIDINCR register. Further, bit 12 of TWIDINCR controls whether the RAM index saturates at 63 (behavior when the bit is set to 1) or wraps around (behavior when the bit is 0) in the Auto-increment mode.
- **Frequency shifter mode with fine frequency increment**: This mode is enabled using CMULT_MODE = 1010b. This mode is an extension of the Frequency shifter mode (previously explained, where CMULT_MODE = 0001b). In this mode, in addition to the previously explained frequency shifter functionality,

Copyright © 2025 Texas Instruments Incorporated

there is another signed 10-bit offset TWIDINCR_DELTA_FRAC that can be added to the de-rotation frequency, such that the de-rotation frequency changes incrementally after every “execution count”. The TWIDINCR_DELTA_FRAC value is automatically accumulated to the de-rotation frequency at the end of the current execution of the current parameter-set with CMULT_MODE = 1010b. The fixed-point design of this datapath is illustrated in Figure 9). In effect, the input samples x(n) for n = 0 to SRCACNT-1 are multiplied by the sequence: exp(–j * 2*pi * ((TWIDINCR + 2^(-6) * TWIDINCR_DELTA_FRAC * execution_count) * (0:SRCACNT-1) / 16384)). The execution_count here refers to the current execution count of the parameter-set with CMULT_MODE = 1010b. The TWIDINCR_DELTA_FRAC accumulator is reset only via software by writing to the TWID_INCR_DELTA_FRAC_RESET_SW register bit. Note that the TWIDINCR_DELTA_FRAC register is applicable only in this mode of the complex multiplier and is ignored in all other modes.

The memory layouts for different modes are illustrated in Figure 7-121.

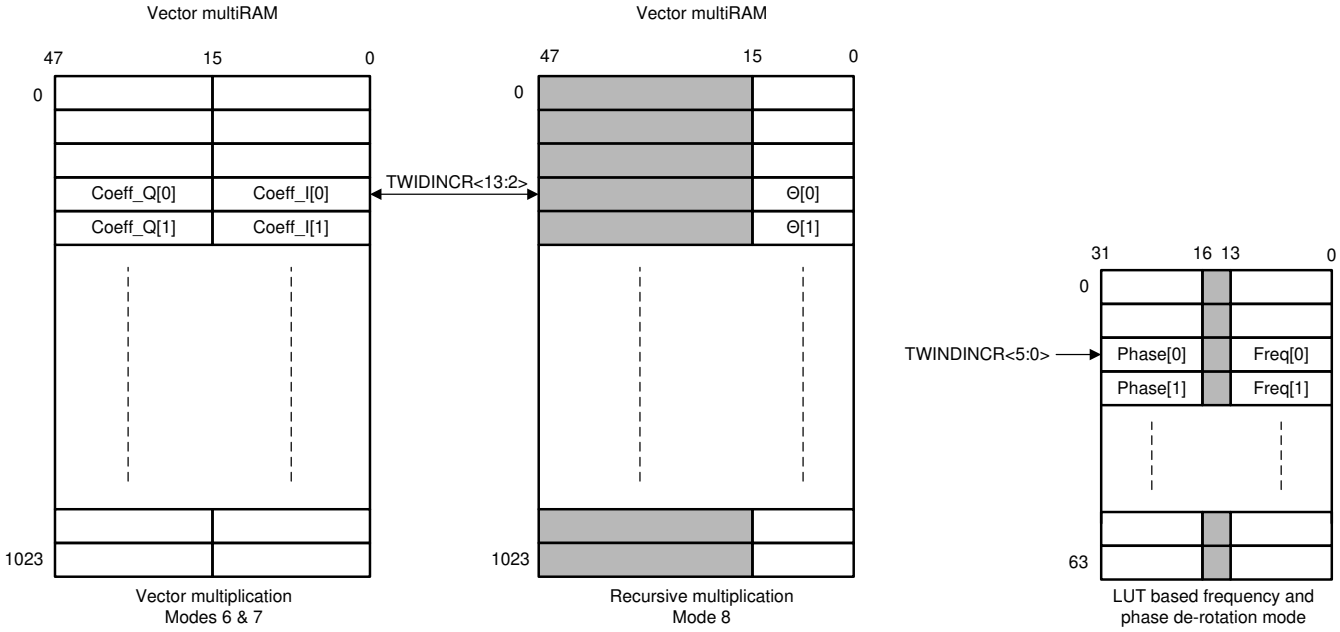

Figure 7-121. Memory Layout for Different Multiplication Modes

7.4.7.7 BPM Removal

Although not explicitly shown in Figure 2-1, it is possible to multiply the input samples going from the input formatter into the core computational unit with a +1/-1 programmable binary sequence (of length up to 256). This feature is enabled by setting the register bit BPM_EN in the parameter-set.

This feature may be useful when Binary Phase Modulation (BPM) is used during transmission of chirps. The BPM pattern is generally a pseudo-random sequence (chipping sequence) of 1’s and -1’s, which have already been applied to the radar transmit signal. Therefore, the radar signal processing of the resultant analog-to-digital converter (ADC) samples prior to FFT needs to undo the modulation. For instance, if each chirp is transmitted with a +1 or -1 polarity, then it is necessary to undo this sequence prior to the second dimension FFT processing across chirps. The BPM removal feature can be used to achieve this.

Note that an alternate way to achieve this is to pre-multiply the window coefficients, which are signed numbers, in the window RAM, so that the process of windowing prior to FFT takes care of undoing the BPM sequence.

When BPM removal is enabled, each input sample is multiplied by a +1 or -1, based on the bit sequence present in the eight 32-bit registers, BPMPATTERN0, BPMPATTERN1, … BPMPATTERN7. A bit value of 0 (1) multiplies the input sample with 1 (–1). The register BPMRATE is used to control for how many consecutive samples the same BPM bit is applied. For example, if BPMRATE = 4, then the same BPM bit is applied for 4 consecutive samples. Similarly, if BPMRATE = 1, then the BPM bit is changed for every sample.

Copyright © 2025 Texas Instruments Incorporated

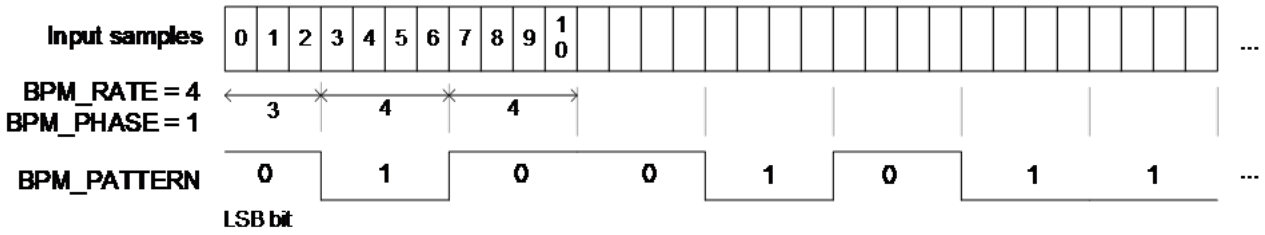

Figure 7-122. BPM Removal Capability

There is another register BPMPHASE that specifies the number of consecutive samples for which the first BPM bit is applied. Note that this is applicable only for the first BPM bit. If BPMPHASE = 0, then the first BPM bit is applied for BPMRATE number of samples. Otherwise, the first BPM bit is applied for BPMRATE – BPMPHASE number of samples. For example, if BPMPHASE = 1 and BPMRATE = 4, then the first BPM bit is applied for 4-1 = 3 samples, and then subsequent BPM bits are applied with periodicity of 4 samples for each bit. This is shown in Figure 7-122. If multiple iterations (for example, four back-to-back FFTs in a single parameter-set using BCNT=3) are done, then the same BPM pattern gets applied to the input samples in each iteration.

Notethe limitation that the BPM pattern register is 256 bits long, hence, the maximum BPM sequence length that is supported is 256. For higher BPM sequence length, the alternate approach of pre-multiplying the window coefficients stored in the window RAM may be considered.

7.4.7.8 Channel Combining

The accelerator allows combining of data samples from multiple channels into one effective channel. This is done via an accumulator that sums a set of successive samples along the A dimension. The samples to combine are indicated by a 256-length bit-vector, CHAN_COMB_VEC. A string of ‘1’ or a string of ‘0’ sums the samples corresponding to the indices. A ‘10’ or ‘01’ transition demarcates the groups. This results in a variable rate output based on the length of 1s-string & 0s-string. The down-stream processing stalls during the grouping. The LSB of this bit-vector corresponds to the first input sample. An additional register, CHAN_COMB_SIZE needs to be programmed to indicate the number of samples after this combination in A dimension. The combination pattern is the same across all iterations. The channel combining is feature is enabled only if CHAN_COMB_EN is set to 1. The bit-vector CHAN_COMB_VEC is specified through eight 32-bit registers, CHAN_COMB_VEC0, CHAN_COMB_VEC1, … CHAN_COMB_VEC7.

Channel combination is illustrated with an example here: if CHAN_COMB_VEC0 = 0x008C (and CHAN_COMB_VEC1-7 are 0s), SRCACNT = 11 (i.e. 12 samples), and CHAN_COMB_SIZE = 5, then the first 2 samples are combined into one output sample, the next 2 samples are combined into one output sample, and the next 3 samples are combined into one output sample, the next sample is output as another output sample, and the last 4 samples are combined into one output sample. Note that the 1s and 0s in CHAN_COMB_VEC can be flipped to achieve the same effect.

7.4.7.9 Zero Insertion

In addition to traditional zero padding before FFT, the accelerator includes a Zero Insertion feature. This feature allows filling of zeros at arbitrary locations in the A dimension, prior to windowing and FFT. Zero insertion is typically meant for angle-dimension FFT to account for missing antenna positions. The Zero Insertion capability is applicable to FFT sizes up to 256 .

In HWA2.0, ZERO_INSERT_MASK is a 256-bit vector (split in eight 32-bit registers) that holds the positions of zero-insertion. A bit value of ‘0’ inserts a zero and a value of ‘1’ means the input is passed through. Input streaming is stalled during the zero insertion. The register ZERO_INSERT_NUM is used indicate the number of zeros to be inserted. The register ZERO_INSERT_EN, if set to 1, enables this feature.

Zeros insert locations directly refer to FFT’s input sample indices. For example in HWA2.0, if FFT size is 16, SRCANT is 11, ZERO_INSERT_MASK0 = 0xFF0F means that the first 4 samples are passed through, 4 zeros

Copyright © 2025 Texas Instruments Incorporated

are inserted, and the next 8 samples are passed through. As with channel combination, the zero insertion pattern remains same across iterations.

This mode is not to be confused with zero padding mode where zeros are appended to an input stream. The number of zeros padded at the end depends on FFTsize, zero insertion and channel combination. It is recommended to avoid zero insertion for the last sample in the iteration (the last sample should come through input formatter).

Note

There is a known observation with the behavior in the readback values of the DSS_HWA_DEROT_RAM when using it as the zero-insertion mask register space. The RAM was designed to hold data up to 14-bits within 16-bit words (0x0000 to 0x3FFF) for frequency shifter phase values in CMULT_MODE = 1001 and the topmost 2 MSBs were not to be cared for. When using the zero-insertion feature in HWA 2.1, the RAM can be programmed with full range of 16-bit values (0x0000 to 0xFFFF) and the complete zero insertion for 2048 samples can be achieved as intended. The only thing to note would be that the readback value of the same which will read the top 2 MSBs as 0 (Eg : RAM programmed with 0xFFFF would have a readback value of 0x3FFF). This however does not represent the actual contents of the RAM nor will it affect the functionality of the zero-insertion feature. It is suggested that the user refer to the value programmed via software and treat it as the actual contents of the RAM. It can also be noted that in the HWA2.1, the ZERO_INSERT_MASK_<n> registers are obsolete.

7.4.7.10 Pre-Processing Block – Register Descriptions

Table 7-90 lists all the registers of the pre-processing block. As explained in the first part of this chapter, some of the registers are common (common for all parameter-sets) registers, whereas, some others are “part of each parameter-set”. For each register, this distinction is captured as part of the register description in Table 7-90.

Table 7-90. Pre-Processing Registers

Register.field	Width	Parameter-Set? (Y/N)	Description
DCEST_RESET_MODE	2	Y	2-bit field that controls the reset behavior for all 12 DC accumulators 00 : Hold Accumulator state without updating 01 : Reserved 10 : Reset at start of param-set (i.e., per-chirp DC estimation). 11 : Reset at start of param-set only if loop counter is 0 (i.e., per-frame DC estimation)
DC_EST_CTRL.dc_est_scale	9	N	Programmable fine scaling for DC estimation: 9-bit scale applied to all 12 DC accumulators. This is followed by right shift and truncation. Multiplies the accumulator output by DC_EST_SCALE/256. Default value is 256 giving a scale of 1.0. Setting it to 128, gives a scale of 0.5.
DC_EST_CTRL.dc_est_shift	4	N	Programmable right shift for DC estimation: Right bit-shift applied to all 12 DC accumulator outputs. Cannot be bypassed. Accumulator outputs are scaled by 2^(8 + 6 + DC_EST_SHIFT). Valid range for this register is 0 to 14 (i.e., scaling of 2^14 to 2^28). Note that DC_EST_SHIFT = 15 is not supported.
DC_ACC_I_<n>_VAL_LSB.Dc_acc_i_<n>_val_lsb n=0,1,..11	32	N	These read-only registers provide the lower 32 bits of 36b DC estimation accumulator values –I&Q for 12 streams for processor read-out.
DC_ACC_I_<n>_VAL_MSB.Dc_acc_i_<n>_val_msb n=0,1,..11	4	N	These read-only registers provide the upper 4 bits of 36b DC estimation accumulator values –I&Q for 12 streams for processor read-out.

Copyright © 2025 Texas Instruments Incorporated

Table 7-90. Pre-Processing Registers (continued)

Register.field	Width	Parameter-Set? (Y/N)	Description
DC_EST_RESET_SW.dc_est_reset_sw	1	N	Software reset for DC accumulators: Setting this register bit to 1 resets all 12 DC estimation accumulators. This is a self-clearing reset bit.
DC_EST_I_<n>_VAL.dc_est_i_<n>_val DC_EST_Q_<n>_VAL.dc_est_q_<n>_val n=0,1,..11	24	N	These read-only registers provide the DC estimates – I&Q for 12 streams – for the processor to read.
DC_ACC_CLIP_STATUS.dc_acc_clip_status	12	N	Clip status indication (read-register) for the 12 DC accumulators (both I and Q combined). Value of 1 indicates a clipping event occurred.
DC_EST_CLIP_STATUS.dc_est_clip_status	12	N	Clip status indication (read-register) for the 12 DC estimates (both I and Q combined). Value of 1 indicates a clipping event occurred.
DCSUB_EN	1	Y	Enable or Disable DC subtraction. If this register bit is set to 1, DC subtraction is enabled. Else, it is disabled.
DCSUB_SELECT	1	Y	Source select for DC subtraction: 0 : Value comes from processor via DC_SW_I<n> & DC_SW_Q<n> 1: Value comes from built-in DC estimation hardware, i.e., DCEST_I<n> & DCEST_Q<n>
DC_I<n>_SW.dc_i<n>_sw DC_Q<n>_SW.dc_q<n>_sw n=0,1,..11	24	N	User-programmed DC values used for DC subtraction. These registers are relevant only when DCSUB_SELECT is 0.
DC_SUB_CLIP.dc_sub_clip	1	N	Clip status indication (read-register) for DC subtraction node (both I and Q combined). Value of 1 indicates a clipping event occurred.
INTF_LOC_THRESH_EN	1	Y	Enable/Disable for Interference localization (marking out): This registerbit controls the enable/disable for the interference marking (setting Interference Indicator Bit) feature. The feature is enabled if this register bit is set to 1.
INTF_LOC_THRESH_MAG<n>_SW.intf_loc_thresh_mag<n>_sw n=0..11	24	N	Software Interference threshold for Magnitude These registersare used to specify the user-programmed threshold for marking out samples affected by interference in the Interference localization block. The magnitude of each incoming samples is compared with this threshold to decide whether it is corrupted by interference or not.
INTF_LOC_THRESH_MAGDIFF<n>_SW.intf_loc_thresh_magdiff<n>_sw n=0…11	24	N	Software Interference threshold for Magnitude of backward difference These registersare used to specify the user-programmed threshold for marking out samples affected by interference in the Interference localization block. The magnitude of backward difference of incoming samples is compared with this threshold to decide whether it is corrupted by interference or not.
INTF_LOC_THRESH_MODE	2	Y	Interference detection mode selection: This register is used to control the mode for interference detection in the Interference localization block. 00 : Magnitude OR Magnitude difference 01: Only Magnitude difference 10: Only Magnitude 11 : Magnitude AND Magnitude difference

Copyright © 2025 Texas Instruments Incorporated

Table 7-90. Pre-Processing Registers (continued)

Register.field	Width	Parameter-Set? (Y/N)	Description
INTF_LOC_THRESH_SEL	2	Y	Select the source of interference threshold 0 : User-defined threshold via INTERFTHRESH_MAG_SW and INTERFTHRESH_MAGDIFF_SW 1 : Single threshold based on built-in interference statistics outputs using sum value across collected interference statistics 2 : Threshold based on built-in interference statistics outputs, with each statistic being used for corresponding iteration (RX channel)
INTF_STATS_RESET_MODE	2	Y	Reset mode control for Interference statistics accumulators: Controls the reset behavior for all 12 magnitude and magdiff accumulators. 00 : Hold Accumulator state without updating 01 : Free-running accumulator mode 10 : Reset at start of parameter-set (i.e.,per-chirp accumulation). 11 : Reset at start of parameter-set only if loop counter is 0 (i.e., per-frame)
INTF_STATS_CTRL.intf_stats_mag_scale	8	N	Programmable fine scaling for Interference statistics Magnitude: Scaling applied to INTF_STATS_MAGACC<n> from interference statistics block.
INTF_STATS_CTRL.intf_stats_mag_shift	3	N	Programmable right shift for Interference statistics Magnitude: Right bit-shift applied to the interference magnitude accumulator. Total right shift of the accumulator is 2^(3+6+INTF_STATS_MAG_SHIFT). Valid range for this register is 0 to 6 (i.e., the total right shift can't be more than 2^15).
INTF_STATS_CTRL.intf_stats_magdiff_scale	8	N	Programmable fine scaling for Interference statistics MagDiff: Scaling applied to INTF_STATS_MAGDIFFACC<n> from interference statistics block.
INTF_STATS_CTRL.intf_stats_magdiff_shift	3	N	Programmable right shift for Interference statistics MagDiff: Right bit-shift applied to the interference magdiff accumulator. Total right shift of the accumulator is 2^(3+6+INTF_STATS_MAGDIFF_SHIFT). Valid range for this register is 0 to 6 (i.e., the right shift can't be more than 2^15).
INTF_STATS_MAG_ACC_<n>_LSB.intf_stats_mag_acc_<n>_lsb	32	N	These read-only registers provide the lower 32 bits of 36b magnitude accumulator values –I&Q 12 streams for processor read-out.
INTF_STATS_MAG_ACC_<n>_MSB.intf_stats_mag_acc_<n>_msb	4	N	These read-only registers provide the upper 4 bits of 36b magnitude accumulator values –I&Q 12 streams for processor read-out.
INTF_STATS_MAGDIFF_ACC_<n>_LSB.intf_stats_magdiff_acc_<n>_lsb	32	N	These read-only registers provide the lower 32 bits of 36b magnitude difference accumulator values –I&Q 12 streams for processor read-out.
INTF_STATS_MAG_ACC_<n>_MSB.intf_stats_mag_acc_<n>_msb	4	N	These read-only registers provide the upper 4 bits of 36b magnitude difference accumulator values –I&Q 12 streams for processor read-out.
INTF_STATS_RESET_SW.intf_stats_reset_sw	1	N	Software reset bit for all the interference statistics accumulators. This is a self-clearing reset bit.
INTF_LOC_THRESH_MAG<n>_VAL.intf_loc_thresh_mag<n>_val	24	N	Read-only thresholds – scaled and shifted INTF_STATS_MAGACC<n> of interference statistics block

Copyright © 2025 Texas Instruments Incorporated

Table 7-90. Pre-Processing Registers (continued)

Register.field	Width	Parameter-Set? (Y/N)	Description
INTF_STATS_SUM_MAG_VAL.intf_stats_sum_mag_val	24	N	Sum of INTF_LOC_THRESH_MAG<n>_VAL, based on number of iterations. Useful as single magnitude threshold value across all iterations
INTF_LOC_THRESH_MAGDIFF<n>_VAL.intf_loc_thresh_magdiff<n>_val	24	N	Read-only thresholds – scaled and shifted INTF_STATS_MAGACCDIFF<n> of interference statistics block
INTF_STATS_SUM_MAGDIFF_VAL.intf_stats_sum_magdiff_val	24	N	Sum of INTF_LOC_THRESH_MAGDIFF<n>_VAL, based on number of iterations. Useful as single magnitude difference threshold value across all iterations
INTF_STATS_SUM_MAG_VAL_CLIP_STATUS.intf_stats_sum_mag_val_clip_status	12	N	Read-only clip status indication register for 12 interference statistics magnitude accumulators INTF_STATS_MAGACC<n>. Value of 1 indicates a clipping event occurred in atleast one accumulator
INTF_STATS_SUM_MAGDIFF_VAL_CLIP_STATUS.intf_stats_sum_magdiff_val_clip_status	12	N	Read-only clip status indication register for 12 interference statistics magnitude-difference accumulators INTF_STATS_MAGACCDIFF<n>. Value of 1 indicates a clipping event occurred in atleast one accumulator
INTF_STATS_ACC_CLIP_STATUS.intf_stats_mag_accumulator_clip_status	12	N	Read-only clip status indication register for 12 magnitude based interference threshold. INTF_LOC_THRESH_MAG<n>_VAL. Value of 1 indicates a clipping event occurred in atleast one estimate
INTF_STATS_ACC_CLIP_STATUS.intf_stats_magdiff_accumulator_clip_status	12	N	Read-only clip status indication register for magnitude-difference based interference threshold. INTF_LOC_THRESH_MAGDIFF<n>_VAL. Value of 1 indicates a clipping event occurred in atleast one estimate
INTF_STATS_THRESH_CLIP_STATUS.intf_stats_thresh_mag_clip_status	1	N	Read-only clip status for sum of all magnitude thresholds computed by the statistics block. Value of 1 indicates that the sum clipped.
INTF_STATS_THRESH_CLIP_STATUS.intf_stats_thresh_magdiff_clip_status	1	N	Read-only clip status for sum of all magnitude difference thresholds computed by statistics block. Value of 1 indicates that the sum clipped.
INTF_LOC_COUNT_ALL_CHIRP.intf_loc_count_all_chirp	12	N	Read-only register indicating the number of samples that exceeded the threshold in a given param-set. The count is saturated to 2^12 – 1.
INTF_LOC_COUNT_ALL_FRAME.intf_loc_count_all_frame	20	N	Read-only register indicating the number of samples that exceeded the threshold across multiple executions of same param-set. The count is saturated to 2^20 – 1.
INTF_MITG_EN	1	Y	If this bit is set, the interference mitigation path is activated, else it is bypassed.
INTF_MITG_PATH_SEL	2	Y	Based on the value of this register, one of the three paths is activated. 00b: Simple Zeroing out 01b: Windowed Zeroing out 10b: Linear Interpolation 11b: Reserved
INTF_MITG_WINDOW_PARAM_<n>.intf_mitg_window_param_<n> n=0..4	5 (each)	N	This is a programmable array of window parameters. Each window parameter is an unsigned 5 bit integer. The length of the array is 5. The parameters of the window are assumed to be monotonically ascending. For example : val = floor(hanning(14)*32) INTF_MITG_WINDOW_PARAM = val(2:6); If a shorter window (of length less than 5) is desired, some of the earlier window parameters can be set to 31. This sets the window parameter to 31/32 (or ~1).

Copyright © 2025 Texas Instruments Incorporated

Table 7-90. Pre-Processing Registers (continued)

Register.field	Width	Parameter-Set? (Y/N)	Description
INTF_MITG_CNTTHRESH	5	Y	The (total) number of non-zero IIB within the 'Hysteresis window' should exceed this threshold for the sample-under-test to be considered to be affected by interference. Range : 0 to 31.
INTF_MITG_RIGHT_HYST_ORD	4	Y	The length of the IIB array considered on the right side of (i.e. after) the sample under test. Range : 0 to 15.
INTF_MITG_LEFT_HYST_ORD	4	Y	The length of the IIB array considered on the left side of (i.e. before) the sample under test. Range : 0 to 15.
CMULT_MODE	4	Y	Complexmultiplication mode selection: This registeris used to configure the mode of the complex multiplication sub-block. A value of 0000b disables/bypasses the complex multiplication. Any other value chooses one of nine available modes of operation . Detailed description of the nine modes in the main description section.
CMULT_SCALE_EN	1	Y	Complex multiplier iteration enable : This register bit is applicable in certain modes of the complex multiplication pre-processing to enable per-iteration change of the complex scalar coefficient. When using scalar multiplication mode of the complex multiplier (CMULT_MODE = 0101b), if CMULT_SCALE_EN is set to 1, then the input samples are multiplied by a different complex scalar (i.e., ICMULTSCALE0, QMULTSCALE0 to ICMULTSCALE11, QMULTSCALE11) for each iteration. Else, a constant complex scalar ICMULTSCALE0 and QCMULTSCALE0 is applied to all samples across all iterations. When using vector multiplication mode (CMULT_MODE = 0110b), if CMULT_SCALE_EN is set to 1, then instead of pulling the coefficients for vector multiplication from the Vector Multiplication Coefficients RAM, the input samples are multiplied successively by ICMULTSCALE0, QMULTSCALE0 to ICMULTSCALE11, QMULTSCALE11 registers.
ICMULT_SCALE<n>.icmult_scale<n> QCMULT_SCALE<n>.qcmult_scale<n> n = 0 ..11	21	N	Coefficients for Complex multiplication: Refer the description for CMULT_SCALE_EN register.
VEC_MULT_RAM[1024]	32	N	Vector multiplication RAM : Stores the complex vector multiplication coefficients used in modes 6, 7 and 8. Layout shown in Fig. 28-34

Copyright © 2025 Texas Instruments Incorporated

Table 7-90. Pre-Processing Registers (continued)

Register.field	Width	Parameter-Set? (Y/N)	Description
TWIDINCR	14	Y	Frequency shifter configuration: When the complex multiplication sub-block is programmed in one of the frequency shifter modes (CMULT_MODE = 0001b or 0010b), this register is used to indicate the amount of frequency shift. When the complex multiplication sub-block is programmed in FFT stitching mode (CMULT_MODE = 0011b), the last two bits of this register specify whether it is 4K or 8K FFT stitching. Specifically, if the last two bits are 01b, then it is 4K FFT stitching and if the last two bits are 10b, then it is 8K FFT stitching. Values of 00b and 11b are reserved. Also, the 12 MSB bits of this register must be kept zero in the FFT stitching mode. In all other modes of the complex multiplication sub-block, this 14-bit register must be kept as 0. When the complex multiplication sub-block is programmed with CMULT_MODE = 0110b, 0111b or 1000b, then the 12 MSBs of this register are used as an address offset for the Vector Multiplication Coefficients RAM (the 2 LSBs must be kept 0). When the complex multiplication sub-block is programmed with CMULT_MODE = 1001b, then the 6 LSBs of this register are used an address offset for TWID_ANGLE_RAM, with bit 13 enabling auto-address increment over iterations and bit 12 enabling address saturation or address roll-over after 63.
TWID_INCR_DELTA_FRAC.twid_incr_delta_frac	10	N	Fractional frequency increment per execution of the parameter-set: Frequency shift value to be accumulated at the end of current parameter-set. Refer main description for more details.
DSS_HWA_DEROT_RAM	32	N	
RECWIN_MODE	1	Y	Recursive window mode select bit.(0) –the K value increments with iteration. (1) –the K value increments with paramset execution count. K always starts from 0
RECWIN_RESET_SW.recwin_reset_sw	1	N	Software reset bit for recursive window K value. This is a self-clearing reset bit.
RECWIN_INIT_KVAL.recwin_init_kval	12	N	RESERVED. This is a reserved register and should be always kept 0.
TWID_INCR_DELTA_FRAC_RESET_SW.twid_incr_delta_frac_reset_sw	1	N	Software reset bit for fine frequency increment accumulator (in CMULT_MODE = 1010b). This is a self-clearing reset bit.
TWID_INCR_DELTA_FRAC_CLIP_STATUS.twid_incr_delta_frac_clip_status	1	N	Read-only register bit that indicates clip status for the fine-frequency increment accumulator (in CMULT_MODE = 1010b).
BPM_EN	1	Y	Enable/Disable BPM removal: This registerbit specifies whether the BPM removal needs to be enabled or not. If this register is set, then BPM removal is enabled prior to feeding samples from the input formatter into the core computational unit.

Copyright © 2025 Texas Instruments Incorporated

Table 7-90. Pre-Processing Registers (continued)

Register.field	Width	Parameter-Set? (Y/N)	Description
BPM_PATTERN<n>. bpm_pattern_<n> n=0..7	256	N	BPM pattern: Specifies the BPM patternto be used to multiply the input samples if BPM removal is enabled. The 256-bit word is split into 8 32-bit words as [BPM_PATTERN_7, BPM_PATTERN_6, BPM_PATTERN_5, BPM_PATTERN_4, BPM_PATTERN_3, BPM_PATTERN_2, BPM_PATTERN_1, BPM_PATTERN_0]
BPM_RATE.bpm_rate	10	N	BPM rate: Specifies the numberof input samples corresponding to each BPM bit. Minimum valid value for this register is 1.
BPMPHASE	4	Y	BPM startingphase: Specifies the startingphase of the BPM pattern periodicity. For more information, see the detailed description.
CHAN_COMB_EN	1	Y	Enable/Disable channel combining: If this register bit is set to 1, then the channel combining feature is enabled.
CHAN_COMB_VEC_<n>.chan_comb_vec_<n> n=0..7	256	N	Sample index indicator for Channel combining : This register indicates the sample indices that need to be combined in the Channel combiner block. A ‘01’ or ‘10’ transition demarcates the groups. The 256-bit word is split into 8 32-bit words as [CHAN_COMB_VEC_7,CHAN_COMB_VEC_6, CHAN_COMB_VEC_5, CHAN_COMB_VEC_4, CHAN_COMB_VEC_3, CHAN_COMB_VEC_2 CHAN_COMB_VEC_1, CHAN_COMB_VEC_0]
CHAN_COMB_SIZE.chan_comb_size	8	N	This register indicates the number of samples after channel combination in each iteration.
CHANNEL_COMB_CLIP_STATUS.channel_comb_clip_status	1	N	Clip status indication (read-register) during channel combining. Value of 1 indicates a clipping event occurred.
ZERO_INSERT_EN	1	Y	Enable/Disable zero-insertion: If this register bit is set to 1, then the zero-insertion feature is enabled.
ZERO_INSERT_NUM.zero_insert_num		N	This register indicates the number of zeros to be inserted in each iteration.

7.4.8 Core Computational Unit - CFAR Engine

This section describes the CFAR engine block present in the core computational unit.

Copyright © 2025 Texas Instruments Incorporated

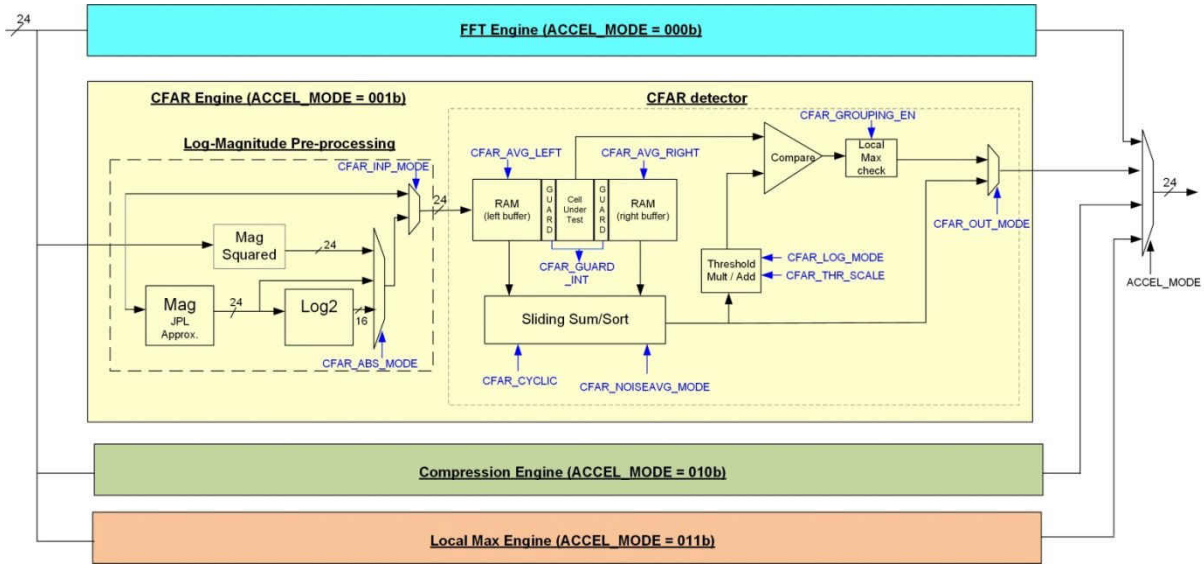

Figure 7-123. CFAR Engine

7.4.8.1 CFAR Engine

The CFAR engine (Figure 7-123) is a module that enables detection of objects, by identifying peaks in the FFT output. Although there are several detection algorithms, the accelerator supports CFAR-CA and CFAR-OS algorithms. CFAR-CA stands for constant false alarm rate – Cell Averaging. CFAR-OS stands for constant false alarm rate – Ordered Statistic.

As shown in figure, the CFAR engine path is selected by setting the accelerator mode ACCEL_MODE = 001b. In this mode, the FFT path is not usable simultaneously and the input 24-bit samples from the input formatter block will be routed into the CFAR engine. The CFAR engine has capability to perform CFAR- detection processing (both linear and logarithmic CFAR modes are available) and generate a peak list.

In CFAR, the processing steps involve computing a threshold for each sample under test (cell under test) and deciding whether a peak is detected or not based on whether the cell under test crosses that threshold. Additionally, peak grouping may be done, where a peak is declared only if the cell under test is greater than or equal to its most immediate neighboring cells to its left and right. One thing to note here is that for peak grouping, the left and right neighboring cells themselves are not required to be CFAR qualified.

In CFAR-CA case, for each cell under test, the computation of threshold is done by averaging the magnitude (or magnitude- squared or log-magnitude) of a specified number of noise samples to the left and right of the cell under test to determine a ‘surrounding noise level’ and then applying a scale factor (or addition factor in case log-magnitude is used) on that surrounding noise average to determine the threshold. Thus, the CFAR-CA detector takes one cell at a time, computes the threshold and decides whether a valid peak is present at that cell. In the case of CFAR-OS, for each cell under test, the computation of threshold is done by sorting the magnitude (or magnitude-squared or log-magnitude) of a specified number of noise samples to the left and right of the cell under test and selecting a specific “K-th” lowest value from the sorted list as representative of the surrounding noise level, and then applying a scale factor on that value to determine the threshold.

7.4.8.1.1 CFAR Engine – Operation

The CFAR engine receives 24-bit input samples from the Input Formatter block. Typically, these are real samples, representing the magnitude or magnitude-squared or log-magnitude of the FFT output. However, the input to CFAR engine can instead be complex samples, in which case, either magnitude or magnitude-squared or log-magnitude of the complex samples can be computed inside the CFAR engine itself. This is done by the log-magnitude pre-processing sub-block inside the CFAR engine (see Figure 7-123). The real unsigned result from this pre-processing operation is sent to CFAR detection processing. The registers CFAR_INP_MODE and CFAR_ABS_MODE are used to configure real vs. complex input, as well as the nature of pre-processing

Copyright © 2025 Texas Instruments Incorporated

required. The log-magnitude computation uses the same JPL approximation for magnitude calculation and the same look-up table (LUT) approximation for log2 computation as described in the section 28.5.1.8 for FFT engine post-processing. Note that for the case of real input (i.e., CFAR_INP_MODE = 1), the input samples must be unsigned. In this case, CFAR_ABS_MODE register has no effect.

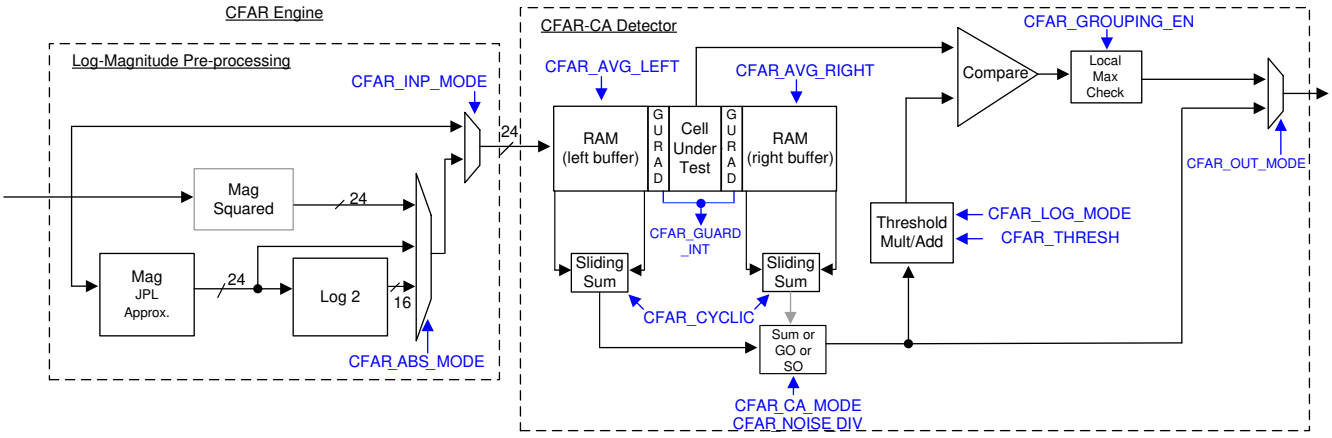

Figure 7-124. CFAR Engine Block Diagram

As described earlier, the CFAR detection processing involves finding a “surrounding noise average” for each cell under test and then determining a threshold that is a function of the surrounding noise average. The cell under test is compared against this threshold to decide whether a peak is present or not in that cell. To calculate the threshold, the surrounding noise average is multiplied with (or added to) a threshold scaling factor specified in CFAR_THRESH register.

There are two modes in which the CFAR detector can be used – in non-logarithmic mode (a.k.a linear CFAR), the threshold scale factor is multiplied, and in logarithmic mode (a.k.a logarithmic CFAR), the threshold scale factor is added. This is decided based on CFAR_LOG_MODE register.

Note: The linear and logarithmic modes are available for CFAR-CA and its variants. Their detection cores are built with 24-bit datapath width. Only the logarithmic mode is available for CFAR-OS. The CFAR-OS detection core is built with 16-bit datapath width, which is sufficient in logarithmic mode.

The final detection threshold that is so obtained is used to compare against the cell under test to determine whether a peak is detected in that cell.

Table 7-91 summarizes the register settings for the different CFAR modes of operation.

Table 7-91. CFAR Modes and Register Settings

Desired CFAR Mode	Input Real or Complex	Desired Pre-Processing	Register Values to Use		
			CFAR_INP_MODE	CFAR_ABS_MODE	CFAR_LOG_MODE
Linear CFAR	Real	N/A	1	00	0
	Complex	Magnitude	0	10	0
		Mag-squared	0	00	0
		Log2-Mag	0	11	0
Log CFAR	Real	N/A	1	00	1
	Complex	Log2-Mag	0	11	1

Desired CFAR-CA Algorithm	CFAR_CA_MODE Register Setting
CFAR-CA	00
CFAR-CAGO	01
CFAR-CASO	10

Copyright © 2025 Texas Instruments Incorporated

Desired CFAR-CA Algorithm	CFAR_CA_MODE Register Setting
CFAR-OS	11

The surrounding noise level computation has multiple options – cell averaging (CFAR-CA), cell averaging with greater-of selection (CFAR-CAGO), cell averaging with smaller-of selection (CFAR- CASO) and ordered statistic (CFAR-OS). The register CFAR_CA_MODE is used to select one among CFAR-CA, CFAR-CAGO, CFAR-CASO and CFAR-OS modes. In CFAR-CA, the noise samples on the left side and right side of the cell under test (after ignoring some guard cells on either side) are simply averaged to determine the surrounding noise level. In CFAR-CAGO, the noise samples on the left side and right side are averaged independently and the greater of the two is used to determine the threshold. In CFAR-CASO, the lesser of the two is used. In CFAR-OS, the noise samples on the left side and right side of the cell under test (after ignoring some guard cells on either side) are sorted and the “K-th” lowest value from the sorted list is selected as the surrounding noise level. The selection of “K-th value” from the sorted list is based on the register CFAR_OS_KVALUE (see table of registers for more details on this register).

The number of samples on the left side and right side used for computing the noise average is configured using CFAR_AVG_LEFT and CFAR_AVG_RIGHT registers and the number of guard cells is configured using CFAR_GUARD_INT register (Figure 7-124). The number of samples used for left side noise averaging is given by 2*CFAR_AVG_LEFT. The number of samples used for right side noise averaging is given by 2*CFAR_AVG_RIGHT. The number of guard cells that are ignored on each side of the cell under test is given by CFAR_GUARD_INT. For example as shown in Figure 7-125, if CFAR_AVG_LEFT = CFAR_AVG_RIGHT = 16, and CFAR_GUARD_INT = 3, then it means that the most immediate three samples each to the left and right of the cell under test are skipped and then, 32 samples on the left and 32 samples on the right side are used for noise averaging. Note that even though the term noise averaging is used here, the actual implementation simply adds the noise samples first and the “averaging” is done as a divide by a power-of- 2 as specified in a separate register, CFAR_NOISE_DIV. These registers are described in Section 9.1.

Note: The CFAR engine also supports a special “constant threshold mode” of CFAR detection. In this special mode, the detection threshold value to compare with each cell-under-test is based on a user configurable constant – CFAR_DET_THR. This detection threshold value is independent of “surrounding noise level”, and the detection comparison depends only CFAR_DET_THR, CFAR_THR_SCALE, and CFAR_LOG_MODE. This mode of operation can be achieved by setting the engine in CFAR-CA mode and additionally setting CFAR_AVG_LEFT = CFAR_AVG_RIGHT = 0. In this constant threshold mode, CFAR_THRESH scalefactor is multiplied with CFAR_DET_THR in the linear mode, and in the logarithmic mode the threshold scale factor is added.

In case of CFAR-CA, the valid values for CFAR_AVG_LEFT and CFAR_AVG_RIGHT is any number between 0 and 63 (except 1), which means that the number of samples each on the left side and right side used for noise averaging can be one of 0, 4, 6, 8, 10, 12, 14, … 124, 126. The values of CFAR_AVG_LEFT and CFAR_AVG_RIGHT can be different in cyclic mode of CFAR and need to be equal in non-cyclic mode (both are described in a later section).

However, in the case of CFAR-OS, the valid values for CFAR_AVG_LEFT and CFAR_AVG_RIGHT are highly restricted. They need to be equal (i.e., same window size on left and right sides) and further, the only values supported for these registers in CFAR-OS mode are: 0, 4, 6, 8, 12, 16, 24 and 32 (which corresponds to number of samples being 0, 8, 12, 16, 24, 32, 48 and 64 on either side). Note that the register CFAR_NOISE_DIV, which is used in CFAR-CA for noise “averaging”, is not applicable in case of CFAR-OS.

Copyright © 2025 Texas Instruments Incorporated

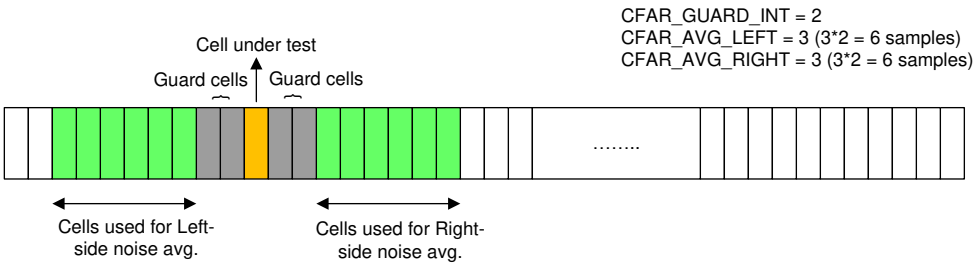

Figure 7-125. CFAR-CA: Cells Used for Surrounding Noise Average

As mentioned earlier, the CFAR_THRESH register specifies the threshold scaling factor. This is an 18-bit register whose value is used to either multiply or add to the 'surrounding noise average' to determine the threshold used for detection of the present cell under test. If logarithmic mode is disabled (in magnitude or magnitude-squared mode), then the register value is multiplied with the surrounding noise average to determine the threshold, else it is added to the surrounding noise average. In the former case, this 18-bit register is interpreted as a 14.4 value and supports a range of values from 1/16 to 2^14-1. In the latter case (logarithmic mode), the 18-bit register is interpreted as a 7.11 value.

The CFAR engine supports a few output formats that are described next.

7.4.8.1.2 CFAR Engine – Output Formats

As part of CFAR detection, the cells that exceed the threshold are noted and this 'Detected Peaks list' is sent to the destination memory. Since the output format of the core computational unit is 24-bits I and 24-bits Q, the detected peaks list is formatted into 'I' and 'Q' channels as shown in Figure 7-126 below. The 24-bit I channel contains the index at which the peak is detected, with the MSB 12 bits containing the iteration number (corresponding to BCNT counter value) and the LSB 12 bits containing the sample index number (corresponding to SRCACNT counter value). The 24-bit Q channel contains the surrounding noise level value or the cell under test value of that detected peak. This is chosen based on CFAR_OUT_MODE register setting. Instead of 'Detected Peaks list', it is also possible for the CFAR engine to send out the raw 'surrounding noise level' value for each cell. This is called 'Raw output mode'.

Copyright © 2025 Texas Instruments Incorporated

Figure 7-126 and Table 7-92 show the different output formats available.

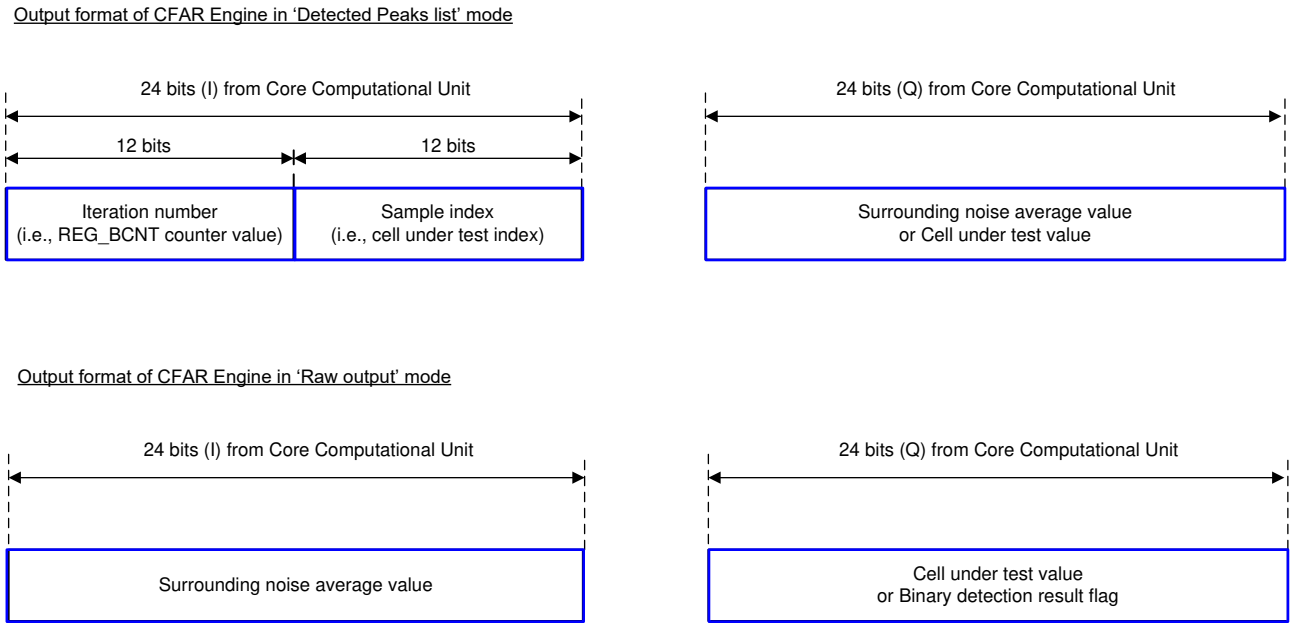

Figure 7-126. CFAR Engine Output Format

In detected peaks list mode, only the detected peaks are output to the destination memory. In this case, the read-only register CFARPEAKCNT indicates how many peaks have been totally detected, so that the main processor can read that many locations from the destination memory. In this mode, the number of peaks stored in the destination memory is limited to a maximum of 4095, or DSTACNT, whichever is smaller. If more peaks are detected beyond this number, they wrap around and circularly overwrite the same locations in the destination memory. Also, in this mode, the register DSTBINDX is not applicable and is ignored.

While detecting peaks, if 'peak grouping' is required, then it can be enabled using CFAR_GROUPING_EN register. In this case, a peak is declared as detected only if it the cell under test exceeds the threshold, as well as, if the cell under test exceeds the two neighboring cells to its immediate left and right (the peak is a local maximum).

Further, there is a special mode of the CFAR Engine called "Dominant peaks mode". This mode can be used to create a modified copy of the range FFT output, where the range FFT bins corresponding to large objects are kept as is, and the range FFT bins which do not correspond to large objects are masked (zeroed out). In this special mode of the CFAR engine, the CFAR engine takes complex (I & Q) input samples and the CFAR engine outputs values that are simply equal to its input values at the sample indices corresponding to the detected peaks, and outputs zeros at all other sample indices. This thereby gives an output array which is the same as the input array AND'ed with the binary CFAR peak detection flags. Note that this special mode is only meaningful when the CFAR input is complex , i.e., when CFAR_INP_MODE = 0. The purpose of this "Dominant Peaks mode" is to re-construct interference affected samples, where this mode can be used to extract the FFT output bins corresponding to large peaks and later, doing an IFFT on this output to re-construct the time domain signal corresponding only to dominant peaks.

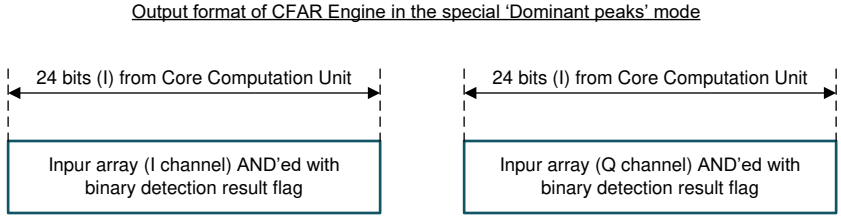

Figure 7-127. CFAR Engine Output Format in Dominant Peaks Mode

Copyright © 2025 Texas Instruments Incorporated

Table 7-92. CFAR Output Modes and Register Settings

CFAROutput Mode	IChannel Output	QChannel Output	Register Settings (CFAR_ADV_OUT_MODE, CFAR_OUT_MODE)
Rawoutput mode (all cells are output)	Surrounding noiselevel	Cellunder test value	(0,00)
	Surrounding noiselevel	Binary detectionresult flag (0 or 1)	(0,01)
Detectedpeaks list mode (only detected peaks are output)	Peak index	Surrounding noiselevel value	(0,10)
	Peak index	Cellunder test value	(0,11)
Dominant peaks mode	Reserved	Reserved	(1,00)
	Input array (I channel) AND'ed with binary detection result flag	Input array (Q channel) AND'ed with binary detection result flag	(1,01)

Copyright © 2025 Texas Instruments Incorporated

7.4.8.1.3 CFAR Engine – Cyclic vs. Non-Cyclic

The register CFAR_CYCLIC specifies whether the CFAR detector needs to work in cyclic mode or in non-cyclic mode. In general, the programmed number of samples for noise level computation (specified by CFAR_AVG_RIGHT and CFAR_AVG_LEFT) are available fully only for the cells under test which are in the middle of the input array (Figure 7-128). For first several cells under test, the available number of samples to the left is lesser than the programmed number. Similarly, for the last several cells under test, the available number of samples to the right is lesser than programmed.

In cyclic mode (Figure 7-129), this is handled by wrapping around the edges in a circular manner. For a cell under test near the left edge, some samples from the right edge (circular wrap around the edge) are fetched to collect the programmed CFAR_AVG_LEFT number of left side samples for noise level computation. Similarly, for a cell under test near the right edge, an appropriate number of samples from the left edge are used (again, circular wrap around the edge).

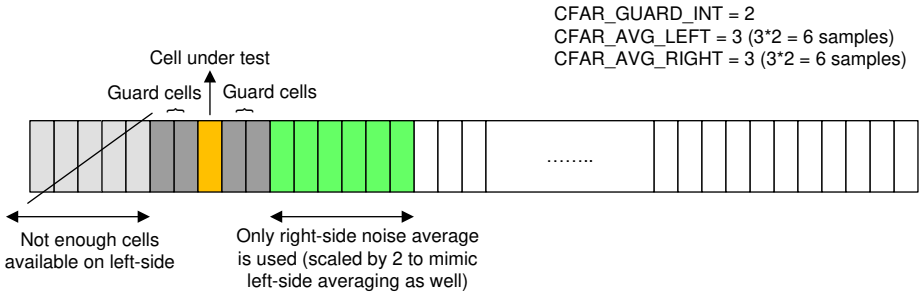

Figure 7-128. Handling of Samples Near the Edge in Non-Cyclic Mode

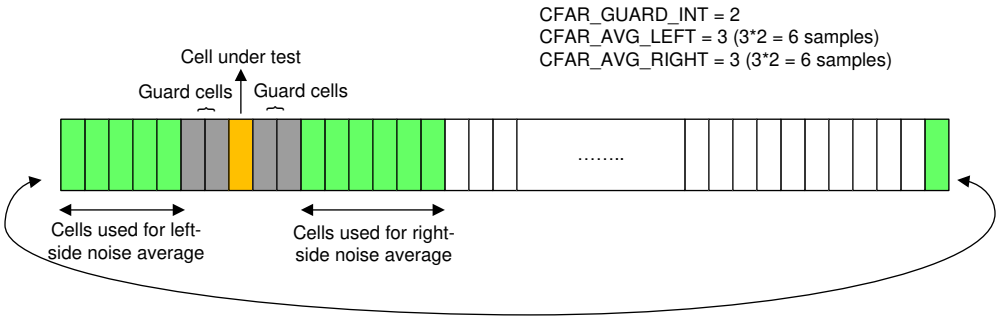

Figure 7-129. Handling of Samples Near the Edge in Cyclic Mode

This cyclic CFAR implementation is accomplished through a combination of a few register settings within the CFAR engine, as well as in the input and output formatter blocks. Specifically, the input formatter is configured to send additional samples (repeat samples) in a circular manner wrapping around the left and right edges. This is achieved by using the A-dimension circular shift (SRCA_CIRCSHIFT) and wrap-around (SRCA_CIRCSHIFTWRAP) registers in the input formatter, such that the required number of extra samples at both edges are streamed into the CFAR engine. The cyclic CFAR mode only works when the number of cells under test is a power of 2.

For example, if the number of cells under test is 256, the average number of left and right noise samples is 32 each and the number of guard cells is 3 on either side. Then, the registers need to be programmed as shown in Table 7-93.

Copyright © 2025 Texas Instruments Incorporated

Table 7-93. Configuration Example for CFAR Cyclic Mode

Module	RegisterSetting	Comments
CFAREngine	CFAR_GUARD_INT= 3	3guard cells on either side
	CFAR_AVG_LEFT= 16 CFAR_AVG_RIGHT= 16	32samples on left side and 32 samples on right side for noise averaging
Input Formatter	SRCACNT =325	255+ (32+3) + (32+3), where 255 is the usually configured value of SRCACNT for a 256 sample vector, plus 32+3 additional samples for circular repeat at either end
	SRCA_CIRCSHIFT= 221	256– (32+3), which is the starting offset for the circular shift, so that samples are streamed into CFAR engine start from this point
	SRCA_CIRCSHIFTWRAP= 8 SRC_CIRCSHIFTWRAP3X = 0	The circularwrap-around happens when SRCACNT counter value reaches 2^SRCA_CIRCSHIFTWRAP = 256
Output Formatter	REG_DST_SKIP_INIT= 0	Noneed to skip any samples at Output Formatter even though extra samples are fed into CFAR engine, because CFAR engine automatically strips out the extra samples
	DSTACNT= 255	256outputs corresponding to 256 cells

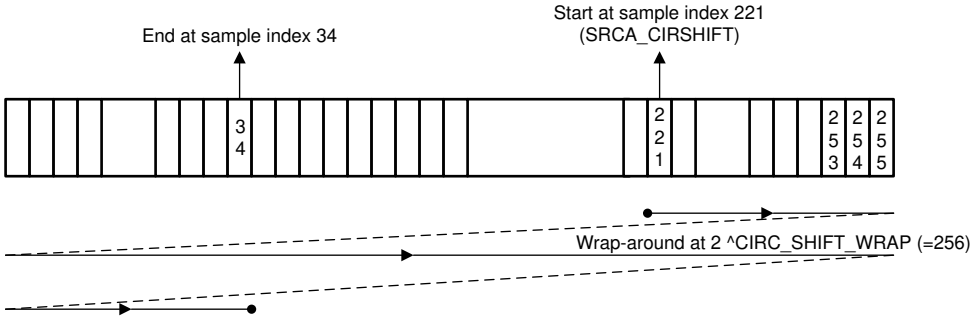

Figure 7-130. Input Formatter Sample Streaming for the Cyclic CFAR Example

However, the handling of edge samples in non-cyclic mode of CFAR is different. It is explained below – first for CFAR-CA and then for CFAR-OS versions.

In non-cyclic mode of CFAR-CA, if the number of available samples on the left for any cell under test is lesser than CFAR_AVG_LEFT, then the noise average is computed solely from the right side. This is done by calculating the noise sum as twice the right side noise sum. Similarly, if the number of available samples on the right is lesser than CFAR_AVG_RIGHT, then the noise average is computed solely from the left side. This is done by calculating the noise sum as twice the left side noise sum. It is required that the CFAR_AVG_LEFT and CFAR_AVG_RIGHT be programmed equally in non-cyclic mode – otherwise, the noise computation for the edge samples is not ideal.

In non-cyclic mode of CFAR-OS, the edge samples are handled as follows. For the cells under test that are near the edges, the number of available surrounding samples for sorting is lesser than programmed (CFAR_AVG_LEFT or CFAR_AVG_RIGHT). These available samples are first sorted and the Kth lowest value is selected as the noise level. It should be noted that this Kth lowest sample in the available samples may result in a sub-optimal noise level for edge samples than non-edge samples because the number of available samples is lesser for edge samples than for non-edge samples. A minor variant for better handling this edge sample case can be enabled by setting the register CFAR_OS_NONCYC_VARIANT_EN to 1. In that case, available samples are first sorted. But instead of using the programmed K value directly for noise sample selection from the sorted array, a proportionally scaled down value is used based on the number of available surrounding samples for each cell under test. This is illustrated in Table 7-94 below, where, L represents the programmed

Copyright © 2025 Texas Instruments Incorporated

CFAR_AVG_LEFT (same as CFAR_AVG_RIGHT) and K represents the programmed CFAR_OS_KVAL. It is required that the CFAR_AVG_LEFT and CFAR_AVG_RIGHT be programmed equally in non-cyclic mode.

Table 7-94. Internal K Value used in CFAR-OS Non-Cyclic Mode

No. of available samples on one side (excluding guard)	No. of available samples on the other side (excluding guard)	Internal K value used for noise sample selection (CFAR_OS_NON_CYC_ VARIANT_EN = 0)	Internal K value used for noise sample selection (CFAR_OS_NON_CYC_ VARIANT_EN = 1)
L	0 to floor(L/4)-1	K	floor (4K/8)
L	floor(L/4) to floor(2L/4)-1	K	floor (5K/8)
L	floor(2L/4) to floor(3L/4)-1	K	floor (6K/8)
L	floor(3L/4) to floor(4L/4)-1	K	floor (7K/8)
L	L	K	K

In general, it is expected that CFAR Engine will be used for arrays much larger than the configured left and right window and guard lengths. Specifically, the ACNT should exceed the sum of configured left and right window and guard lengths.

7.4.8.2 CFAR Engine – Register Descriptions

Table 7-95 lists all the registers of the CFAR engine block.

Table 7-95. CFAR Engine Registers

Register.field	Width	Parameter-Set? (Y/N)	Description
CFAR_AVG_LEFT	6	Y	Number of left-side samples for noise level computation: This register is used to specify the number of samples used for noise level computation to the left of the cell under test. The number of samples used for noise level computation is equal to the value of this register multiplied by 2. For example, if this register value is 15, then the number of left- side samples used for averaging is 30. The maximum number that is possible is 126. A value of zero in this register means that the noise samples on the left side are not used for noise level computation. The valid values for this register are different for CFAR-CA and CFAR-OS modes: In CFAR-CA (and its variants CFAR-CAGO and CFAR-CASO), valid values for this register are 0, 2, 3, 4, …63 (Note that avalue of 1 is not supported). This corresponds to number of samples equal to 0, 4, 6, 8, 10, 12, 14, … 124, or 126. In CFAR-OS mode, valid values for this register are restricted to 0, 4, 6, 8, 12, 16, 24, 32 only (which corresponds to number of samples equal to 0, 8, 12, 16, 24, 32, 48 or 64).
CFAR_AVG_RIGHT	6	Y	Numberof right-side samples for noise level computation: This registeris very similar to the above, except that this register specifies the averaging to the right of the cell under test. In most cases, it is expected that CFAR_AVG_RIGHT has the same value as CFAR_AVG_LEFT. In non-cyclic modes of CFAR, CFAR_AVG_RIGHT must be programmed equal to CFAR_AVG_LEFT.

Copyright © 2025 Texas Instruments Incorporated

Table 7-95. CFAR Engine Registers (continued)

Register.field	Width	Parameter-Set? (Y/N)	Description
CFAR_GUARD_INT	3	Y	Numberof guard cells: This registerspecifies the number of guard cells to ignore on either side of the cell under test. If this register value is 3, then three guard cells on the left side and three guard cells on the right side are ignored. Only the noise samples beyond this guard region are used for calculating the surrounding noise level.
CFAR_OS_KVALUE	7	Y	K-th value for ordered statistic: This register is useful only in CFAR-OS mode, where it indicates the parameter K. From the sorted list of left and right noise samples, the K'th lowest value is used as the noise sample. This is a zero-based count – for instance, if this register value is 27, then the 28th lowest element in the sorted array is selected. Note that since CFAR-OS supports a maximum of 64 samples each on left and right side, the maximum size of the vector to sort is 128, and hence the maximum valid value of CFAR_OS_KVALUE register is 127.
CFAR_OS_NON_CYC_VARIANT_EN	1	Y	Enable scaling of K value for edge samples in non-cyclic CFAR-OS: This is useful only in CFAR-OS in non-cyclic mode. Setting this to 1 enables a variant where the K value used for noise sample selection for edge samples is scaled down proportional to the number of available neighboring samples at edges.
CFAR_THRESH .cfar_thresh	18	N	Threshold scalefactor: This registeris used to specify the threshold scale factor. This value is used to either multiply or add to the 'surrounding noise level' to determine the threshold used for detection of the present cell under test. If logarithmic CFAR mode is disabled (in magnitude or magnitude-squared mode), then the register value is multiplied with the surrounding noise level to determine the threshold, else it is added to the surrounding noise level. In the former case, this 18-bit register is interpreted as a 14.4 value. In the latter case (logarithmic mode), the 18-bit register is interpreted as a 7.11 value.
CFAR_DET_THRESH.cfar_det_thresh	24	N	Constant detection threshold value in constant threshold mode: This register is applicable only in constant threshold mode of CFAR (i.e. only in CFAR-CA mode and only if CFAR_AVG_LEFT = CFAR_AVG_RIGHT = 0). In this special mode, this register specifies the detection threshold value used to compare with cell under test. The detection threshold value is held constant, and scaled by CFAR_THRESH linearly or logarithmically

Copyright © 2025 Texas Instruments Incorporated

Table 7-95. CFAR Engine Registers (continued)

Register.field	Width	Parameter-Set? (Y/N)	Description
CFAR_LOG_MODE	1	Y	CFARlinear or logarithmic mode: This registeris one of the registers used to specify whether the CFAR detector operates in linear or logarithmic mode. If this register bit is set, then the CFAR detector operates in logarithmic mode, which means that the threshold scale factor is added to (instead of multiplied with) the surrounding noise level value to determine the threshold. Note that this mode is meaningful only when the input samples to the CFAR detector are log- magnitude samples (see CFAR_INP_MODE as well). If this register bit is 0, then the logarithmic mode is disabled, in which case, the threshold scale factor is multiplied with (instead of added to) the surrounding noise level to determine the threshold. This mode is meaningful when magnitude or magnitude-squared samples are fed to the CFAR detector.
CFAR_INP_MODE	1	Y	CFARengine input mode: This registerbit specifies whether the inputs to the CFAR engine are complex samples or real values (the real values are already magnitude, magnitude-squared or log-magnitude numbers that can be directly sent to CFAR detection process). If this register bit is 1, then the input samples are real values and are directly sent to CFAR detection. If this register bit is 0, then the inputs are complex samples and hence either magnitude or magnitude- squared or log-magnitude computation is required prior to CFAR detection. Which of the three, viz., magnitude or magnitude-squared or log-magnitude is done, is selected by CFAR_ABS_MODE register described below.
CFAR_ABS_MODE	2	Y	CFARmagnitude, mag-squared or log-mag mode: This registeris used to specify which of the three computations, namely Magnitude, Mag- squared or Log-Magnitude, is enabled inside the CFAR engine prior to CFAR detection. This register is only relevant when CFAR_INP_MODE is 0 (complex samples are fed to CFAR engine). 00b– Magnitude-squared 01b – Not valid 10b– Magnitude (using JPL approximation) 11b– Log2-Magnitude (using LUT approximation)

Copyright © 2025 Texas Instruments Incorporated

Table 7-95. CFAR Engine Registers (continued)

Register.field	Width	Parameter-Set? (Y/N)	Description
CFAR_OUT_MODE	2	Y	CFARengine output mode: The MSBbit of this register selects whether the CFAR Engine outputs all the noise average values for all the cells (‘Raw output’ mode), or whether the CFAR Engine outputs only the detected peaks (‘Detected Peaks List’ mode). The LSB bit specifies the content of the 24-bit ‘I’ and ‘Q’ channel outputs logged in destination memory. If CFAR_ADV_OUT_MODE is set to 1 (special mode called “Dominant peaks”), this register should be set to 1. Refermain description section for details.
CFAR_ADV_OUT_MODE	1	Y	CFARengine special output mode (Dominant peaks mode): This register bit enables the special “Dominant peaks” mode of the CFAR engine. In this mode, the CFAR engine outputs the input array (I and Q) samples corresponding detected peak locations as is and suppresses the non-detected peak locations (sends zeros).
CFAR_GROUPING_ EN	1	Y	CFARpeak grouping enable: This registerbit specifies whether peak grouping should be enabled. When this register bit is 0, peak grouping is disabled, which means that a peak is declared as detected as long as the cell under test exceeds the threshold. On the other hand, if this register bit is 1, then a peak is declared as detected only if it the cell under test exceeds the threshold, as well as, if the cell under test exceeds the two neighboring cells to its immediate left and right (local maximum).
CFAR_NOISE_DIV	4	Y	CFARnoise average division factor: This parameter is applicable only in CFAR-CA modes and it is not applicable in CFAR-OS mode. This registerspecifies the division factor with which the noise sum calculated from the left and right noise windows are divided, in order to get the final surrounding noise average value. The division factor is equal to 2^ CFAR_NOISE_DIV. Therefore, only powers-of-2 division are possible, even though the number of samples specified in CFAR_AVG_LEFT and CFAR_AVG_RIGHT are not restricted to powers of 2. The surrounding noise average value obtained after the division is multiplied or added with CFAR_THRESH to determine the final threshold used to compare the cell under test for detection. The maximum allowed value for this register is 8, which gives a division factor of 256.

Copyright © 2025 Texas Instruments Incorporated

Table 7-95. CFAR Engine Registers (continued)

Register.field	Width	Parameter-Set? (Y/N)	Description
CFAR_CA_MODE	2	Y	CFARnoise averaging mode: This registerconfigures the noise averaging mode in the CFAR detector from one of these options – CFAR-CA, CFAR-CAGO, CFAR-CASO, CFAR-OS. 00b– CFAR-CA 01b– CFAR-CAGO 10b– CFAR-CASO 11b– CFAR-OS
CFAR_CYCLIC	1	Y	CFARcyclic vs. non-cyclic mode: This registerbit specifies whether the CFAR detector needs to work in cyclic mode or in non-cyclic mode. When this register bit is 0, the CFAR detector works in non-cyclic mode and when it is 1, it works in cyclic mode. Refer main description section for details on how to configure and use cyclic mode.
CFAR_PEAKCNT.cfar_peakcnt	12	N	CFARdetected peak count: This isa read-only register that contains the number of detected peaks that are logged in the destination memory, when CFAR Engine is configured in 'Detected Peaks List' mode. In the Detected Peaks List mode, since only the detected peaks are logged in the destination memory, this read-only register provides the number of detected peaks that are logged to the main processor, so that the main processor can determine how many entries to read from the destination memory.

7.4.9 Core Computational Unit – Statistics

This section describes the statistics block present in the core computational unit.

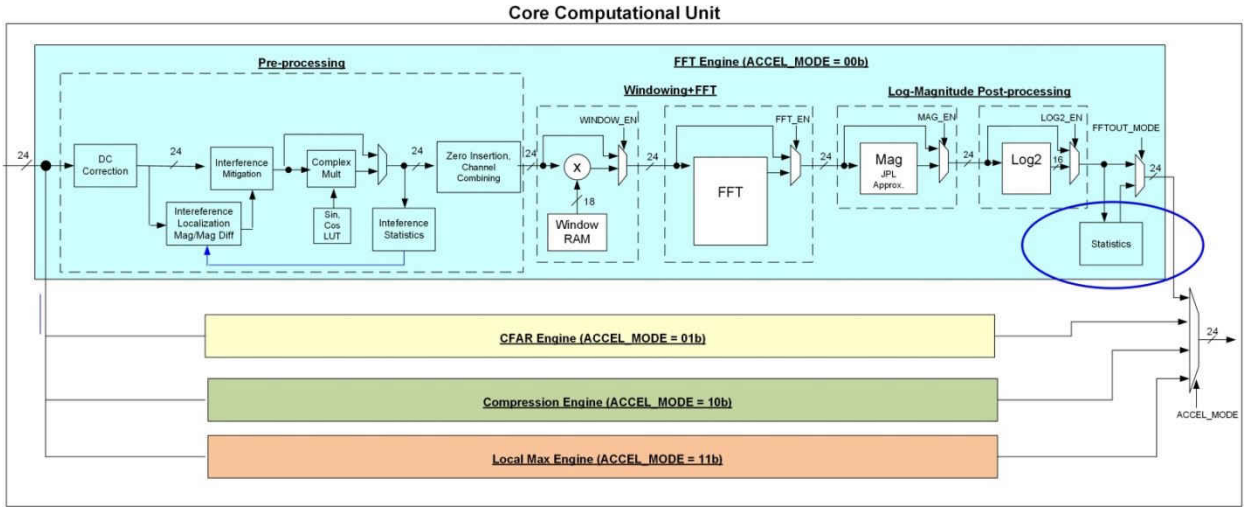

Figure 7-131. Statistics Block

Copyright © 2025 Texas Instruments Incorporated

7.4.9.1 Statistics Block

The corecomputational unit has a statistics computation block at the end of the FFT Engine path as shown in Figure 7-131. It can be used to compute a few simple statistics of the samples output by the core computational unit. It supports computing statistics on 1- and 2-dimensional array inputs.

With 1-dimensional array input, it can compute sum and maximum of samples. It also supports a few advanced features, with 2-dimensional array inputs. It can compute 2 arrays of maxima (one in each dimension) and multiple histograms or cumulative distribution functions (CDFs) of the input samples (one histogram for each sample index).

The simple basic mode of operation is described first. The advanced features are described in separate later sub-sections.

7.4.9.1.1 Basic Statistics Block – Operation

The 24-bit I and 24-bit Q output of the core computational unit goes to a statistics computation block. The purpose of this block is to find the maximum and sum (average) of the output samples

The sum and max statistics are computed on a 'per-iteration' basis (the sum and max values are logged at the end of each iteration) and the computation is reset for the next iteration. The sum and max values are logged in register-sets (see MAXn_VALUE, MAXn_INDEX, ISUMn, QSUMn register-sets), which can be read by the main processor. However, only four such registers are provided for each statistic and therefore, the sum and max values can be logged in these registers only for up to a maximum of four iterations.

The max statistics register-set comprises four read-only registers of 24 bits each, named MAXn_VALUE, for recording max values, and four read-only registers each 12 bits unsigned, named MAXn_INDEX, for recording the max indices. The sum statistics register-set contains four registers of 36 bits each, named ISUMn, for I-sum statistics, and 4 registers of 36 bits each, named QSUMn, for Q-sum statistics.

For larger number (>4) of iterations, either the sum or the max value can be sent to the destination memory for each iteration, which allows the statistic to be available even for cases with more than four iterations. The logging of the statistic into the destination memory is enabled using FFT_OUTPUT_MODE register described below.

The MSB bit of the FFT_OUTPUT_MODE (Table 8) register selects whether the default (main) output of the core computational unit goes to the destination memory, or the statistics block output. If the MSB of this 2-bit register is 0, then it selects the default mode of operation, where the main output (FFT or Log-Mag result) is sent to the destination memory. If the MSB is 1, then it selects the statistics output mode, where either the sum or max statistic is sent to the destination memory (one value per iteration). Whether the sum or max is sent to memory is dependent on the LSB bit. If the LSB bit is 0, then the statistic value that is sent is the max value (useful in conjunction with Log-Mag enabled to find the biggest peak and peak index per iteration). Here, the I output is the maximum value itself and the Q output is the index (location) of the maximum value. If the LSB bit is 1, then the statistic value that is sent is the sum value (useful for DFT mode, as well as for mean squared or mean of absolute values computation).

Table 7-96. Statistics Output Modes

FFT_OUTPUT_MODE Register	IChannel Output	QChannel Output
00b– Default output mode	Main output of core computational unit	
10b– Max statistics output (One output per iteration)	MaxValue	MaxIndex
11b– Sum statistics output (One output per iteration)	Sum ofI values	Sum ofQ values

The max statistic records the maximum value (and its index) of the magnitude or log-magnitude samples corresponding to every iteration. The sum statistic records the sum of the magnitude or log-magnitude or the complex output samples corresponding to each iteration. If the main output of the core computational unit is the complex FFT output (ABS EN=0 and LOG2EN=0), then the sum statistics is the complex sum.

Copyright © 2025 Texas Instruments Incorporated

The complex sum statistics mode is useful when used in conjunction with the complex multiplier block in DFT mode or vector multiplication mode. For example, the sum statistic computed here, together with the DFT mode of the complex multiplier block, enable DFT computation for the desired number of bins (iterations). When the desired number of bins is more than 4, the sum statistic can be sent to destination memory (instead of the main data output that is normally sent to the destination memory).

Notethat when the sum statistics is logged into the destination memory, it goes through the Output Formatter block as only 24-bits each for I and Q (same bit-width as the primary FFT outputs). Hence, the computed sum statistics value of 36-bits width, needs to be scaled down by right-shifting the appropriate number of LSBs (using FFTSUMDIV register) before sending to output formatter. Thus, when logging the statistics in destination memory, the sum statistics is to be used as an “average” value, rather than a “sum” value itself.

The FFTSUMDIV register specifies the number of bits to right-shift the sum statistic before it is written to destination memory. The internal sum statistic register is 36-bits wide (allowing 12 bits of MSB growth of the 24-bit data path), but this statistics value needs to be scaled down to 24 bits to match the data path width going to the Output Formatter. This register specifies how many LSBs to drop to convert the sum statistics to 24-bit value. Note that when ABS_EN = 1, unsigned saturation is implemented, else the saturation is signed. The FFTSUMDIV register specifies how many LSBs to drop to convert the sum statistics to 24-bit value. Therefore, it is recommended that this register is configured to drop an appropriate number of LSBs such that incorrect saturation in case of magnitude sum is avoided.

Notethat in statistics output mode, the registers DSTACNT, DSTAINDX, DSTBINDX, DST16b32b and DSTREAL are not meant to be used, since it is known that there is only one value to be written to destination memory for every iteration in a specific format. It is recommended that in this mode, DSTACNT be programmed to a value of 0, DSTAINDX and DSTBINDX are both programmed to a value of 8 bytes, DST16b32b is set to 1 and DSTREAL is reset to 0. The statistics is then always logged in the destination memory as consecutive 32-bit I and Q samples, irrespective of whether sum statistic or max statistic is being logged.

7.4.9.1.2 Statistics Block – Register Descriptions

Table 7-97 lists all the registers of the statistics block.

Table 7-97. Statistics Block Registers

Register.field	Width	Parameter-Set? (Y/N)	Description
MAX<n>_VALUE.max<n>_value n=1..4	24	N	Max value: These registers contain the max value on a per-iteration basis. These registers are meaningful only when Magnitude or Log-Magnitude is enabled. Only the max values for up to four iterations are recorded in these registers. For larger number of iterations, use statistics output mode (FFT_OUTPUT_MODE below).
MAX<n>_INDEX.max<n>_index n=1..4	12	N	Maxindex: These registerscontain the max index on a per-iteration basis, corresponding to each max value in the MAXn_VALUE registers.

Copyright © 2025 Texas Instruments Incorporated

Table 7-97. Statistics Block Registers (continued)

Register.field	Width	Parameter-Set? (Y/N)	Description
I_SUM<n>_LSB. I_sum<n>_lsb I_SUM<n>_MSB.i_sum<n>_msb Q_SUM<n>_LSB. Q_sum<n>_lsb Q_SUM<n>_MSB. Q_sum<n>_msb	32 4 32 4		Sum statistics: These registerscontain the sum of the I outputs and Q outputs on a per-iteration basis. Only the statistics for up to four iterations are recorded in these registers. For larger number of iterations, use statistics output mode (FFT_OUTPUT_MODE below). Note that both for sum and max the results of last iteration are placed in <n=1> register, the penultimate in <n=2> and so on.
FFT_OUTPUT_ MODE	2	Y	FFT Path outputmode: This registerspecifies the output mode of the FFT path. Instead of the default mode where the main output of the core computational unit is sent to the destination memory, this register can be configured such that either the max or sum statistics can be sent to the destination memory. 00b– Default mode (main output) 10b – Max statistics output mode 11b – Sum statistics output mode
FFTSUMDIV.fftsumdiv	5	N	Right-shiftingfor Sum statistic: This registerspecifies the number of bits to right-shift the sum statistic before it is written to destination memory. The internal sum statistic register is 36-bits wide (allowing 12 bits of MSB growth of the 24-bit data path), but this statistics value needs to be scaled down to 24 bits to match the data path width going to the Output Formatter. This register specifies how many LSBs to drop to convert the sum statistics to 24-bit value.

7.4.9.1.3 Advanced Statistics – 2-Dimensional Maxima

The Statistics block can be used to compute 2 arrays (one in each dimension) of maxima on the input samples. This feature can be enabled by setting the register, MAX2D_EN to 1.

For each iteration, the maximum value observed and the corresponding sample index are stored in per-iteration RAMs. Similarly, for each sample index, the maximum value observed over all the iterations and the corresponding iteration index are stored in per-sample RAMs. Thus, as shown in Figure 7-132 the results include (value, location) pairs stored on a per-iteration basis and per-sample index basis. These RAMs are a part of the

Copyright © 2025 Texas Instruments Incorporated

Advanced Statisitics Memories. This feature supports SRCACNT (samples) in the range of 1 to 255 and BCNT (iteration) in the range of 0 to 1023.

The processor as well as the local maxima computation engine can access the Advanced Statistics Memories. This allows the 2D maxima to be used as thresholds in the local maxima computation steps.

Local Maxima peak detector can be configured to use the max value RAMs as arrays of thresholds. The max value and max index RAMs can also be read and modified by the CPU/DSP. This allows flexible and application specific control on the peak detection thresholds. The data read/write format for the 2Dmax output RAMs are described in the table of Advanced Statistics Memories (Table 7-100).

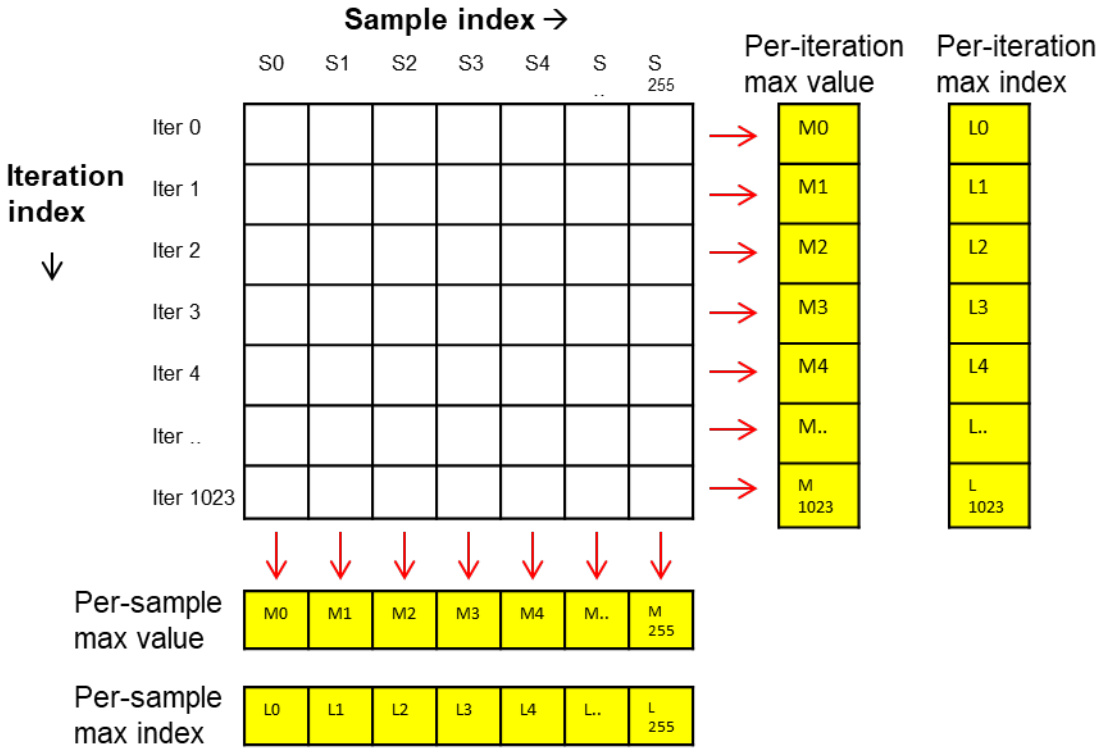

Figure 7-132. 2D Max Advanced Statistics Computation

7.4.9.1.4 Advanced Statistics – Histograms, CDF, and CDF Count Threshold

The Statistics block can compute the histograms or CDFs of the input samples. The statistics block can also be used to calculate a detection threshold based on the CDF.

The histogram function operates on a 2-D matrix of input samples. The ACNT (or 2^FFT_SIZE) number of samples received in a single iteration constitute the “sample” dimension. BCNT+1 iterations of the sample dimension data are received, which constitutes the “iteration” dimension. One histogram is computed for each sample index using values received across all iterations corresponding to that sample index as shown in figure below.

Copyright © 2025 Texas Instruments Incorporated

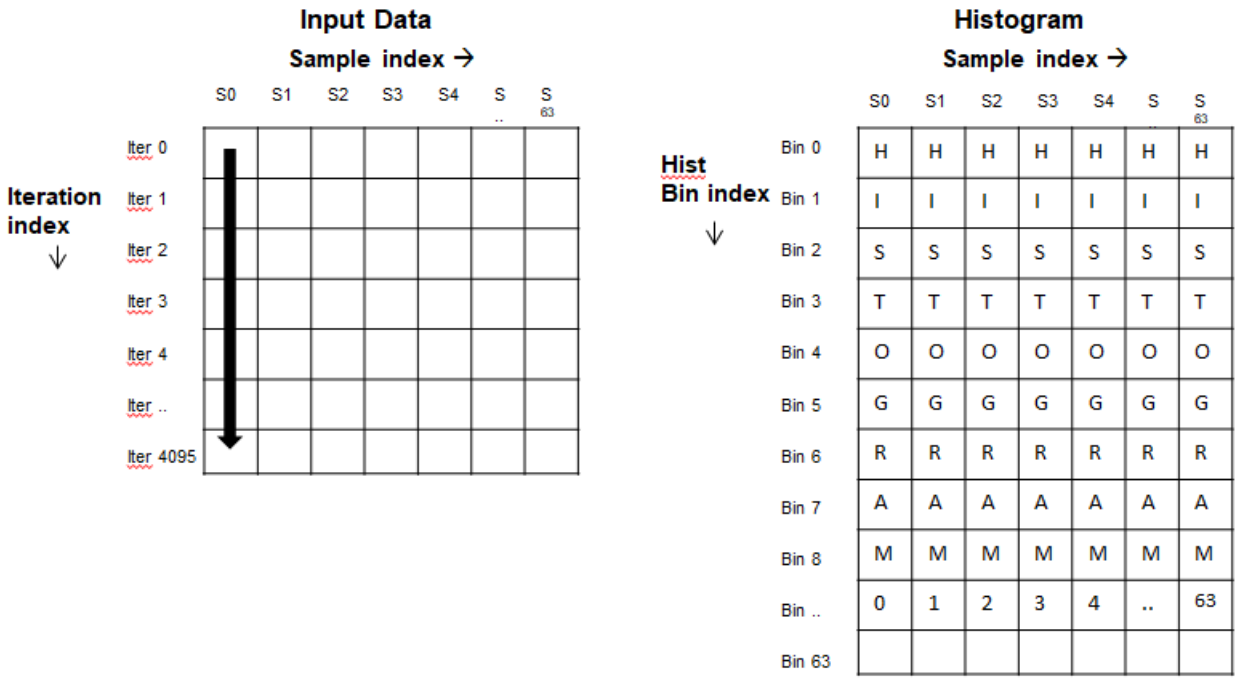

Figure 7-133. Advanced Statistics Histogram Computation

The results are stored in corresponding RAMs which are part of the Advanced Statistics Memories. The register HIST_MODE can be used to enable this feature and select the exact operation mode as mentioned in the table below. MEM_INIT_START bit 13 & 14 should be set to start the Histogram Memory initialization. MEM_INIT_DONE bit 13 & 14 indicates the histogram Memory initialization completion. If 2-D FFT feature is enabled in any parameter set, it is recommended that the advanced 2D statistics feature be disabled in that parameter set.

Table 7-98. Histogram Operating Modes

HIST_MODE	Histogram Statistics Computation
00	Disabled: In this mode, the histogram computation is totally bypassed and the Histogram RAM is retained in its existing state.
01	Histogram computation mode: In this mode, histograms are computed, one histogram per sample index. The histograms are stored in the Histogram RAM.
10	CDF count computation mode: In this mode, CDF counts are computed, one CDF per sample index. The CDF count range (0, number of iterations programmed) maps to the CDF range (0, 1). The CDFs are stored in the Histogram RAM. The CDF count computation needs additional computation time over and above the histogram computation mode. The number of histogram bins times the number of histograms is the number of additional cycles..

Copyright © 2025 Texas Instruments Incorporated

Table 7-98. Histogram Operating Modes (continued)

HIST_MODE	Histogram Statistics Computation
11	CDF threshold computation mode: In this mode, histograms are computed similar to the histogram computation mode. Additionally, for the purpose of computing a detection threshold, information about the histogram bin at which the corresponding CDF would just exceed the programmed register, CDF_CNT_THRESH, is calculated and reported through CDF_CNT_BINNUM. The corresponding CDF and histogram values at that bin are reported through CDF_CNT_CDFVAL and CDF_CNT_HISTVAL.

The histograms are computed on a per-sample-index basis. Up to 64 histograms can be computed. The valid range of SRCACNT for this feature is 1 to 63. The histogram size (number of bins) is programmable (from 8 to 64, in powers of 2) using the register HIST_SIZE_SEL. The bins are uniformly spaced. It should be noted that histogram resolution is optimal if input is in log-magnitude mode rather than linear-magnitude. Since the log-magnitude mode gives outputs with high precision (in 5.11u format, i.e. 5 integer bits, 11 fractional bits, unsigned), they can be scaled down through a programmable right shift before histogram computation, using the register HIST_SCALE_SEL. Valid values for HIST_SCALE_SEL are 7, 8, 9, 10, 11, 12 and 13. The HIST_SIZE_SEL and the HIST_SCALE_SEL registers are explained in Figure 7-134.

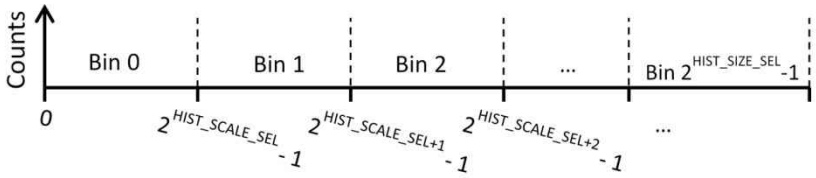

Figure 7-134. HIST_SCALE_SEL and HIST_SCALE_VAL Configuration

It should be noted that the input samples that exceed the highest bin are counted in the histogram's highest bin index. Also, if any bin's count (i.e. the number of occurrences) exceeds the bit-width allocated in the histogram output memory, then the count is clipped to the maximum level.

As an illustration, if SRCACNT = 31, BCNT = 767, HIST_SIZE_SEL = 4, HIST_SCALE_SEL = 10, and HIST_MODE = 0b01, then 32 histograms, each with 16 bins are computed and stored in the Histogram RAM. The bins correspond to the input ranges, [0 to 1023], [1024 to 2047], …, [14*1024 to 15*1024 -1], [>/= 15*1024]. In each of the 32 histograms, the sum of all bin values will match 768. This example assumes that the pre-processing block's channel combining and zero insertion features are not enabled. If they are enabled, then the number of histograms will match the resultant number of samples in A-dimension after the channel combining and zero insertion operations.

The contents of the Histogram RAM can be read by the CPU/DSP and may be utilized to update the threshold arrays for Local Maxima peak detection. The Histogram RAM can be read with the format explained in table of the Advanced Statistics Memories (Table 7-101).Histogram RAMs needs to be initialized before enabling histogram/CDF/Threshold operations in any parameter set. This can be done by setting the MEM_INIT_START_HIST_ODD_RAM and MEM_INIT_START_HIST_EVEN_RAM self-clearing bits described in register description below.

In HIST_MODE = 0b11, the CDF_CNT_BINNUM (bin number where CDF just exceeds the programmed CDF_CNT_THRESH) for each sample is stored along with the corresponding CDF_CNT_CDFVAL and CDF_CNT_HISTVAL. These values are stored in the CDF Threshold RAM which can be read with the format as explained in the Advanced Statistics Memories (Table 7-101).

Copyright © 2025 Texas Instruments Incorporated

7.4.9.1.5 Advanced Statistics Block – Register Descriptions

Table 7-99 lists all the registers of the statistics block.

Table 7-99. Advanced Statistics – Control Registers

Register	Width	Parameter Set	Description
MAX2D_EN	1	Yes	2-Dimensional Maxima Computation Enable: If this bit is set to 1, one maxima (and corresponding index) array for A dimension and another for B dimension are computed and stored in the per-sample and per-iteration RAMs.
HIST_MODE	2	Yes	Histogram Computation Mode: 00: Disable 01: Histogram computation mode 10: CDF computation mode 11: CDF threshold computation mode Refer to the earlier section for details.
HIST_SCALE_SEL	4	Yes	Histogram Input Scale Select: This register isused to select the input scaling before histogram computation. It provides a way to control the resolution of the histogram bins by right-shifting the input sample values before histogram computation. If this register is set to X (and Y=2^X), then the histogram bin ranges are [0, Y-1], [Y, 2Y–1] and so on. Valid values for this register are X=7, 8, 9, 10, 11, 12, and 13.
HIST_SIZE_SEL	4	Yes	Histogram Size Select: This register is used to select the histogram size (number of bins). The size is configurable in powers of 2. The number of histogram bins is 2^HIST_SIZE_SEL. Valid values of this register are 3, 4, 5, and 6. They correspond to histogram sizes of 8, 16, 32, and 64.
CDF_CNT_THRESH.cdf_cnt_thresh	12	No	This register is applicable in CDF count threshold mode of operation. CDF is computed over the histogram till the value of the CDF just exceeds the CDF_CNT_THRESH specified by the user. This register can take values from 0 to BCNT. CDF count threshold value is same for all samples indices (histograms). Value of ‘0’ is not valid.

Copyright © 2025 Texas Instruments Incorporated

Table 7-99. Advanced Statistics – Control Registers (continued)

Register	Width	Parameter Set	Description
MEM_INIT_START	32	No	Writing 1'b1 to bit locations – 13 & 14 would start the memory initialization for the Histogram Memory. These are self-clearing bits Bit 13 : MEM_INIT_START_HIST_ODD_RAM Bit 14 : MEM_INIT_START_HIST_EVEN_RAM
MEM_INIT_DONE	32	No	When the memory initialization is complete, then bit locations 13 & 14 shall be 1b'1 Bit 13 : MEM_INIT_DONE_HIST_ODD_RAM Bit 14 : MEM_INIT_DONE_HIST_EVEN_RAM

Table 7-100 lists the contents of the Advanced Statistics Memory.

Table 7-100. Contents of Advanced Statistics Memory Output

RAM content	Width	Description
MAXVAL_ARRAY_DIM1 [1024] DSS_HWA_2DSTAT_ITER_VAL_RAM	24 bits each	2-D Maxima Array – maximum values of each iteration: The maximum value across samples in each iteration is recorded here (one value per iteration, first address corresponding to first iteration).
MAXLOC_ARRAY_DIM1 [1024] DSS_HWA_2DSTAT_SMPL_VAL_RAM	10 bits each	2-D Maxima Array – maximum locations corresponding to each iteration: The sample index at which the maximum value occurred in each iteration is recorded here (one value per iteration, first address corresponding to first iteration).
MAXVAL_ARRAY_DIM2 [256] DSS_HWA_2DSTAT_ITER_IDX_RAM	24 bits each	2-D Maxima Array – maximum values corresponding to each sample index: The maximum value across the iterations for each sample index is recorded here (one value per sample index, first address corresponding to first sample index).
MAXLOC_ARRAY_DIM2[256] DSS_HWA_2DSTAT_SMPL_VAL_RAM	10 bits each	2-D Maxima Array – maximum locations corresponding to each sample:: The iteration count at which the maximum value occurred corresponding to each sample is recorded here (one value per sample index, first address corresponding to first sample index).
DSS_HWA_HIST_RAM HIST_OUT_ARRAY[64][64]	12 bits each	Histogram Output Corresponding to each Sample Index: The number of occurrences in each histogram bin is recorded here for different sample indices.

Copyright © 2025 Texas Instruments Incorporated

Table 7-100. Contents of Advanced Statistics Memory Output (continued)

RAM content	Width	Description
DSS_HWA_HIST_THRESH_RAM CDF_CNT_BINNUM [64]	6 bits each	If CDF count threshold mode is enabled: the bin number at which the specified count (CDF_CNT_THRESH) is just exceeded is stored in this register for all the sample indices.
DSS_HWA_HIST_THRESH_RAM CDF_CNT_CDFVAL [64]	12 bits each	Valid when CDF count threshold mode is enabled. This stores the CDF count at CDF_CNT_BINNUM bin for all the sample indices.
CDF_CNT_HISTVAL [64] DSS_HWA_HIST_THRESH_RAM	12 bits each	Valid when CDF count threshold mode is enabled. This stores the Histogram count at CDF_CNT_BINNUM bin for all the sample indices.

Table 7-101 lists the read/write format for Advanced Statistics Memories.

Table 7-101. Advanced Statistics Memories Format

RAM	Reg no.	Data Format	Description
Per-iteration Max Value	0	0:23 MAX_VAL_ITER_0 24:31 NU	The maximum value across samples in each iteration is recorded here
	:	:	
	1023	0:23 MAX_VAL_ITER_1023 24:31 NU	
Per-sample Max Value	0	0:23 MAX_VAL_SAMPLE_0 24:31 NU	The maximum value across the iterations for each sample index is recorded here
	:	:	
	255	0:23 MAX_VAL_SAMPLE_255 24:31 NU	
Per-iteration Max Index	0	0:9 MAX_INDEX_ITER_0 10:15 NU 16:25 MAX_INDEX_ITER_1 26:31 NU	The sample index at which the maximum value occurred in each iteration is recorded here
	:	:	
	511	0:9 MAX_INDEX_ITER_1022 10:15 NU 16:25 MAX_INDEX_ITER_1023 26:31 NU	
Per-sample Max Index	0	0:9 MAX_INDEX_SAMPLE_0 10:15 NU 16:25 MAX_INDEX_SAMPLE_1 26:31 NU	The iteration count at which the maximum value occurred corresponding to each sample is recorded here
	:	:	
	127	0:9 MAX_INDEX_SAMPLE_254 10:15 NU 16:25 MAX_INDEX_SAMPLE_256 26:31 NU	

Copyright © 2025 Texas Instruments Incorporated

Table 7-101. Advanced Statistics Memories Format (continued)

RAM	Reg no.	Data Format	Description
Histogram	[0][0]	0:11 HIST_BIN_0_SAMPLE_0 12:15 NU 16:27 HIST_BIN_1_SAMPLE_0 28:31 NU	Histogram output is stored when the HIST_MODE = 0b01 or 0b11. CDF output is stored when the HIST_MODE = 0b10. All the bins of the first sample are stored first. Followed by all the bins of the subsequent samples. Note: The case of 48-point histogram requires some special attention, while reading the histogram results RAM. For the case of 48 pt Histogram, the first 24 sample Histograms are accessed with sample indices [x][0..23] and next 24 sample Histograms are accessed with indices [x][32..55]. 'x' depends on particular number of bins configured determined by HIST_SIZE_SEL
	:	:	
	[32][0]	0:11 HIST_BIN_62_SAMPLE_0 12:15 NU 16:27 HIST_BIN_63_SAMPLE_0 28:31 NU	
	[0][1]	0:11 HIST_BIN_0_SAMPLE_1 12:15 NU 16:27 HIST_BIN_1_SAMPLE_1 28:31 NU	
	:	:	
	:	:	
	:	:	
	:	:	
	[32][63]	0:11 HIST_BIN_62_SAMPLE_63 12:15 NU 16:27 HIST_BIN_63_SAMPLE_63 28:31 NU	
CDF Threshold	0	0:11 CDF_CNT_HISTVAL_SAMPLE_0 12:23 CDF_CNT_CDFVAL_SAMPLE_0 24:29 CDF_CNT_BINNUM_SAMPLE_0 30:31 NU	When HIST_MODE = 0b11, the bin number where the CDF_CNT_THRESH is crossed is stored as CDF_CNT_BINNUM. It is stored in the same register combined with the CDF_CNT_CDFVAL and CDF_CNT_HISTVAL which store the cdf count and the histogram count in that bin respectively. These registers are stored for all the sample separately.
	:	:	
	63	0:11 CDF_CNT_HISTVAL_SAMPLE_63 12:23 CDF_CNT_CDFVAL_SAMPLE_63 24:29 CDF_CNT_BINNUM_SAMPLE_63 30:31 NU	

7.4.10 Core Computational Unit – Local Maxima Engine

The Core Computation Unit includes a Local Maxima Engine, which can be enabled by setting ACCEL_MODE = 011b.

In context of Radar signal processing, Local Maxima Engine is useful in a peak detection step where each sample/bin (Cell Under Test (CUT)) is compared against detection threshold(s), and also compared against

Copyright © 2025 Texas Instruments Incorporated

the neighboring samples and the CUT is declared as a valid local peak if the sample amplitude exceeds the detection threshold and is “more than or equal to” the neighboring cells. Local maxima computations are done on a 2D matrix. Typically, local maxima are computed after the Angle FFT, on the Doppler-Beam/angle “2D” plane (2D Local Maxima).

The output of the local maxima computations is stored into the destination memory as a bit pattern, where each bit indicates whether the specific sample/CUT was detected as a valid local peak or not. More details on this are given in the later section of the document. The detection thresholds can either be configured into the configuration registers or in the Advanced Statistics Memory (borrowed from the Statistics module), in case there are individual thresholds for the different rows and columns of the 2D matrix.

7.4.10.1 Local Maxima Engine – Operation

Figure 7-135 shows an example of 2D plane (eg. Dopplers-Beams plane) used for Local maxima computations. A 3x3 matrix (CUT and all its neighboring samples) is needed to compute the local maxima. To keep the scheme simple and efficient from memory access perspective (as the input samples for local maxima computations are fetched from the memory), a 3x4 matrix (shown as red box in Figure) is fetched.

Every cycle, four consecutive samples (16-bit x 4 = 64bits) are picked from the memory and this is repeated three times across three row vectors (doppler bins) to fetch the 3x4 matrix data. This box keeps on moving to the right (computation wise) till the last group of four samples are fetched. By the end of this process, we get a bit-pattern of size (bits) equivalent to the number of columns (i.e., beams), with each bit indicating whether the specific bin was a local peak or not. This scheme is repeated for each doppler vector to get the bit-pattern output for the complete 2D plane.

Samples are fetched using the three-dimension addressing scheme built-in to the Input Formatter (the dimensions denoted by A, B and C) by configuring the configuration registers accordingly. For Local Maxima operation, there are restrictions on the maximum sizes of these dimensions. The number of columns (achieved through dimension B) has to be one of these supported values: 8, 12, 16, 24, 32, 48, 64, 96, 128, 192, 256. The number of rows (achieved through dimension C) can be any value between 3 and 1024.

Typically, for CUT processing at the edges, wrap-around around these dimensions would be required (cyclic mode of operation). This is achieved using the configuration registers SRCB_CIRCSHIFTWRAP, SRC_CIRCSHIFTWRAP3X and WRAP_COMB. If non-cyclic mode of operation is desired (i.e., for the edge samples, the neighboring cells should not be wrapped around), then LM_DIMB_NONCYCLIC and LM_DIMC_NONCYCLIC register bits can be set. In this case, the unavailable neighbouring samples will be considered as masked out.

Copyright © 2025 Texas Instruments Incorporated

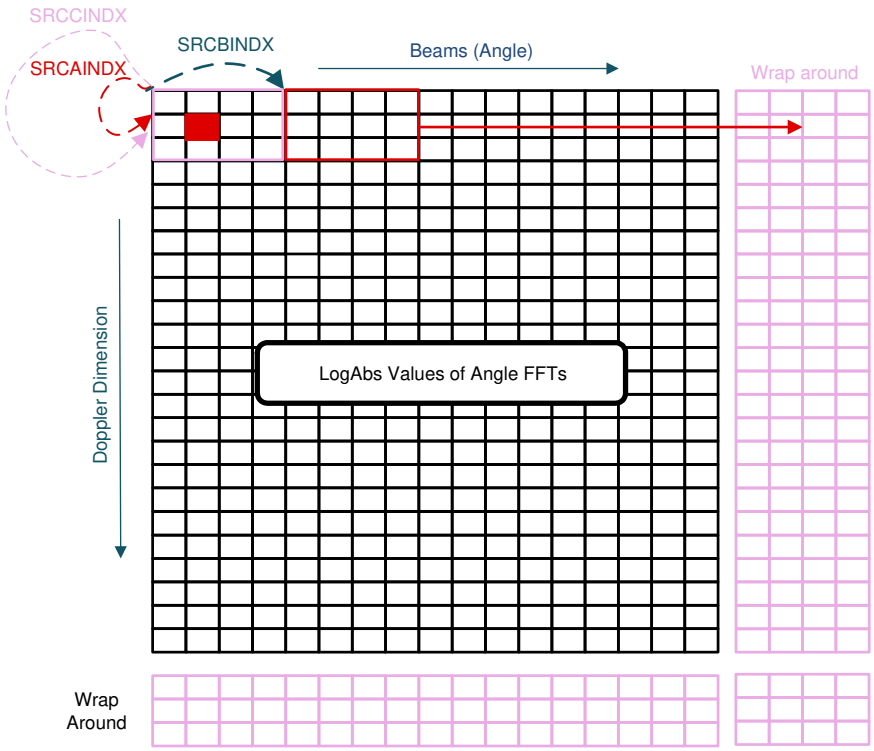

Figure 7-135. Local Maxima Engine A, B and C-Dimension Usage

Below is the example of the configuration values of each of these registers accessing the samples from the source memory for Local maxima computations for a 256x12 matrix. Note that though SRCACNT and SRCBINDX values are part of configuration registers, for the local maxima functionality, the values shall always be fixed to the values of 2 and 8 respectively, as shown below in Figure 7-136. The other registers are calculated easily as a function of the number of beams (number of columns) and number of Doppler (number of rows) as shown in the figure. Note that these configurations are irrespective of whether cyclic or non-cyclic mode of operation. It is important that in Local Maxima Engine mode of operation, the registers of Input Formatter and Output Formatter listed in figure below are programmed exactly as per the calculations shown.

Copyright © 2025 Texas Instruments Incorporated

Register	Value
SRCACNT	2
SRCAINDX	NumCols * 2
BCNT	NumCols / 4
SRCBINDX	8
CCNT	NumRows - 1
SRCCINDX	NumCols * 2
SRCREAL	0
SRC16b32b	1
WRAP_COMB	NumCols * NumRow * 2
SRC_CIRCSHIFTWRAP3X	010b if NumCols is one of {12, 24, 48, 96, 192}, 000b if NumCols if one of {8, 16, 32,64,128, 256}
SRCB_CIRCSHIFTWRAP	log2(NumColls/12) if NumCols is one of {12, 24, 48, 96, 192}, log2(NumCols/4) if NumCols is one of {8, 16, 32, 64, 128, 256}
DSTREAL	1
DSTACNT	ceil(NumCols/32) - 1
DSTAINDX	4
DSTBINDX	4 * ceil(NumCols/32)
DST16b32b	1

Figure 7-136. Local Maxima Engine Configuration

7.4.10.2 Local Maxima Engine – Operating Mode Configurations

Local maxima computations involve comparing each CUT with several values. The values that can be compared with are the 8 neighboring (adjacent right/left/top/bottom/diagonal) samples in the 2D matrix, row-threshold and a column-threshold. Each of these comparisons can be enabled or disabled through the configuration registers LM_NEIGH_BITMASK (8-bit) and LM_THRESH_BITMASK (2-bit).

The row- and column-thresholds can be selected from software configurable registers DIMB_THRESH_VALUE and DIMC_THRESH_VALUE or Maxima Arrays from Advanced Statistics RAM. This selection can be made through the register LM_THRESH_MODE. Further, if the Maxima Arrays from Advanced Statistics RAM are selected for determining thresholds, then the Local Maxima engine has provision for adding 24-bit signed offsets (one in each dimension). This can be useful in log-mode of operation, to convert the maxima arrays to row- and column-thresholds for peak detection. The offsets are programmable through the registers, MAX2D_OFFSET_DIM1 and MAX2D_OFFSET_DIM2. As these offsets are *added* to the Maxima Arrays from Advanced Statistics RAM to derive the detection thresholds, typically, these registers are expected to be set to negative values.

Figure 7-137 and Figure 7-138 illustrate the thresholding and comparisons in Local Maxima. The result of the Local Maxima comparisons is a 2D bit pattern. Each bit in it indicates whether the corresponding (row, column) CUT either exceeded *or equaled* each of the values it was compared against. A value of 0 in the result bit indicates that at least one of these values exceeded the CUT and 1 indicates otherwise.

Copyright © 2025 Texas Instruments Incorporated

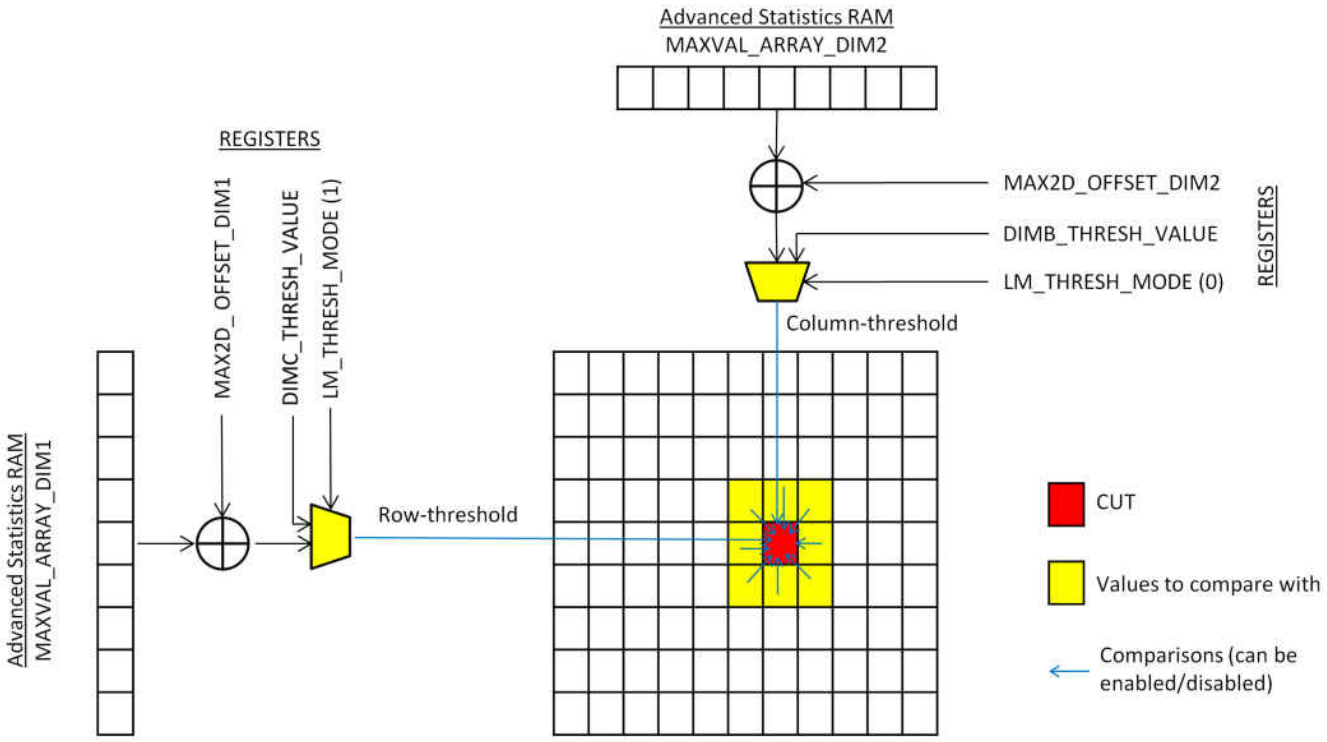

Figure 7-137. Local Maxima – Example Operating Mode Configurations

LM_NEIGH_BITMASK (0)	LM_NEIGH_BITMASK (1)	LM_NEIGH_BITMASK (2)
LM_NEIGH_BITMASK (7)	CUT	LM_NEIGH_BITMASK (3)
LM_NEIGH_BITMASK (6)	LM_NEIGH_BITMASK (5)	LM_NEIGH_BITMASK (4)

Figure 7-138. Local Maxima – Bitmask Configuration

7.4.10.3 Local Maxima Engine – Output Write Pattern

The output of the local maxima computations is first shifted to a local shift register of 256 bits. The output is pushed on to the local memory in HWA only once the computations worth one full row is completed. So, 256 puts a restriction on the maximum number of bins can be used in a particular row.

The output bit pattern is stored in the destination memory packed as 32-bit words, with the LSB bit corresponding to B-dimension (column) count of 0. In case when the output of a vector is not a multiple of 32 bits, the remaining bits in the last 32-bit word would be irrelevant bits and shall be ignored (set to ‘0’). If the number of bits per Doppler row is less than 32, for example 16, then 16 LSB of a 32b word are populated with bitmask and the remaining 16b are set to ‘0’.

This mechanism is described in the below diagrams Figure 7-139 and Figure 7-140.

Copyright © 2025 Texas Instruments Incorporated

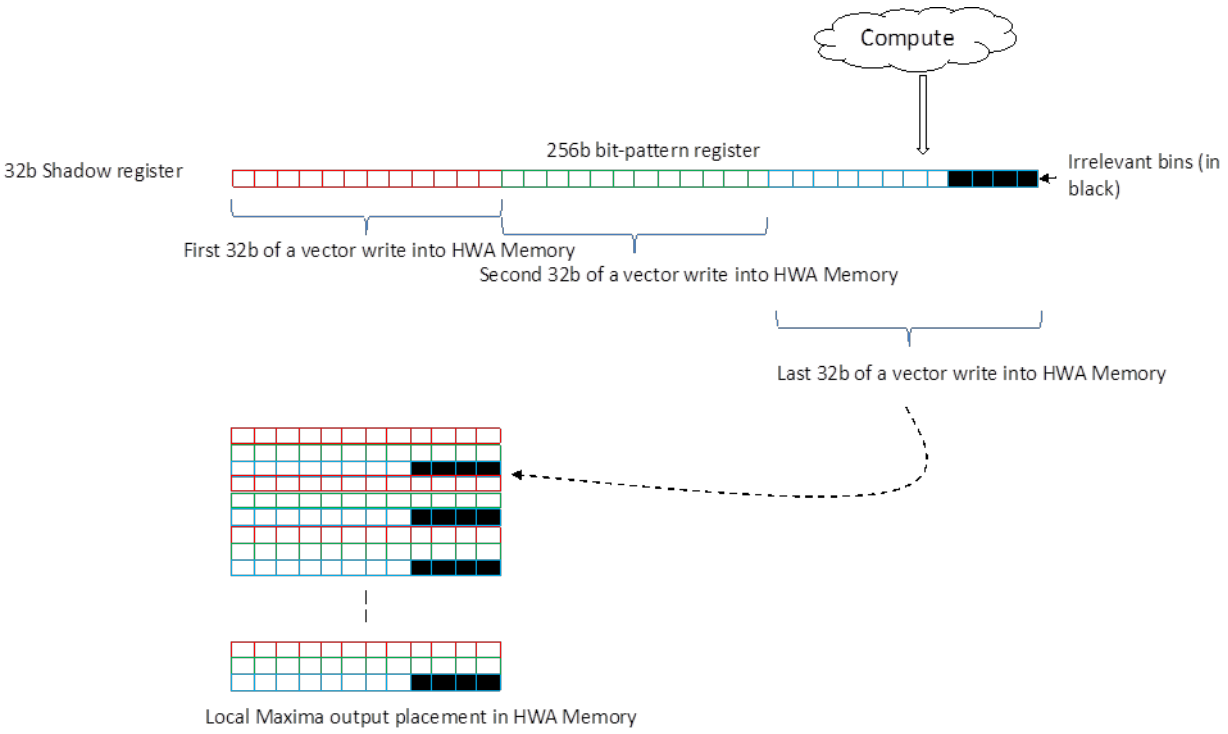

Figure 7-139. Local Maxima Output Write Pattern

(a) for 16 angles, the lower half-word is relevant, the upper is all zeros

Row i	16b'0	16b
Row I + 1	16b'0	16b

(b) for 48 angles, 3 half-words are relevant, the 4th is all zeros.

Row i	16b	16b
	16b'0	16b
Row I + 1	16b	16b
	16b'0	16b

Figure 7-140. Local Maxima Output Write Pattern for (a) 16 Angles, (b) 48 Angles

7.4.10.4 Local Maxima Engine – Register Descriptions

Table 7-102. Local Maxima Engine – Registers

Register	Width	Parameter Set	Description
LM_NEIGH_BITMASK	8	Y	Neighbour bitmask for CUT comparison: Bit mask for the 8 neighbouring cells (adjacent left/right/top/left/ diagonal) to enable or disable the comparison with cell under test. Starting from left top corner and moving in a clock-wise direction. If a bit is set to 1, then the corresponding comparison is disabled.

Copyright © 2025 Texas Instruments Incorporated

Table 7-102. Local Maxima Engine – Registers (continued)

Register	Width	Parameter Set	Description
LM_THRESH_BITMASK	2	Y	Enable/Disable for detection threshold comparison: 00b: Enable CUT comparison with detection threshold in both dimensions 01b: Enable CUT comparison with detection threshold in column dimension only (B-dimension threshold) 10b: Enable CUT comparison with detection threshold in row dimension only (C-dimension threshold) 11b: Disable CUT comparison with detection thresholds in both dimensions
LM_THRESH_MODE	2	Y	Threshold source selection: This 2-bit register is used to indicate whether the detection threshold is provided by a software register, or derived from the built-in Advanced Statistics RAM. The LSB of this register corresponds to column dimension (B-dimension), and the MSB corresponds to row dimension (C-dimension). If the register bit is 0, then the threshold is taken from software configured register (DIMB_THRESH_VALUE, DIMC_THRESH_VALUE), whereas if the register bit is 1, then the threshold is taken from the built-in Advanced Statistics RAM, with an offset addition (see registers MAX2D_OFFSET_DIM1, MAX2D_OFFSET_DIM2). .
LM_THRESH_VAL.dimb_thresh_val	16	N	SW configurable column threshold register: Refer description of LM_THRESH_MODE for more details.
LM_THRESH_VAL.dimc_thresh_val	16	N	SW configurable row threshold register: Refer description of LM_THRESH_MODE for more details.

Copyright © 2025 Texas Instruments Incorporated

Table 7-102. Local Maxima Engine – Registers (continued)

Register	Width	Parameter Set	Description
MAX2D_OFFSET_DIM1.max2d_offset_dim1	24	N	Offset for row thresholds from Advanced Statistics RAM: Offset to be added to dimension 1 Maxima results (from Advanced Statistics) to derive row thresholds for Local Maxima computation.
MAX2D_OFFSET_DIM2.max2d_offset_dim2	24	N	Offset for column thresholds from Advanced Statistics RAM: Offset to be added to dimension 2 Maxima results (from Advanced Statistics) to derive column thresholds for Local Maxima computation.
LM_DIMB_NONCYCLIC	1	Y	Dimension B Non Cyclic: 1: Non-cyclic mode of Local Maxima detection (i.e., for the edge samples, the neighboring cells will not be wrapped around) 0: Cyclic mode of Local Maxima detection (i.e., for the edge samples, the neighboring cells will be wrapped around)
LM_DIMC_NONCYCLIC	1	Y	Dimension C Non Cyclic: 1: Non-cyclic mode of Local Maxima detection (i.e., for the edge samples, the neighboring cells will not be wrapped around) 0: Cyclic mode of Local Maxima detection (i.e., for the edge samples, the neighboring cells will be wrapped around)

7.4.11 Context Switching

The state machine supports an advanced feature called ”Context Switching” that allows a sequence of operations running in the hardware accelerator to be interrupted, in order to run a different (higher priority) sequence of operations, before returning back to resume execution of the original sequence. This state machine feature is useful when Doppler FFT, detection and angle FFT processing of a radar frame is still running, while the chirps for the subsequent frame have already started. In such a case, it is possible for the hardware accelerator to perform the Doppler FFT, detection and angle FFT processing in one context (a.k.a the background context), while permitting “context switching” to an alternate context (a.k.a the high priority context) to perform inline range FFT processing as and when new chirp ADC data samples are received.

7.4.11.1 Context Switching – Operation

The context switching feature of the state machine can be enabled by setting the CS_ENABLE register bit. This register is a common (static) register that controls the overall enabling/disabling of the feature.

The background context execution is programmed and configured using PARAM_START_IDX, PARAM_END_IDX, and NUMLOOPS registers as before. The high priority context is programmed using additional parameter-sets that are configured using PARAM_START_IDX_ALT, PARAM_END_IDX_ALT and

Copyright © 2025 Texas Instruments Incorporated

ALT_NUMLOOPS registers (refer to Table 7-98). Normally, the state machine executes the parameter-sets in the background (low-priority) context by looping through the parameter-sets between PARAM_START_IDX and PARAM_END_IDX, until a context switch is triggered. Whenever a context switch from background context to high priority context happens, the state machine jumps to PARAM_START_IDX_ALT and executes the parameter-sets from PARAM_START_IDX_ALT to PARAM_END_IDX_ALT for ALT_NUMLOOPS number of times and returns back to resume execution of the background context from where it left off.

The context switch from background context to high priority context is triggered based on the settings of CS_TRIGMODE and CS_TRIGSRC registers. Specifically, CS_TRIGMODE can be configured to trigger context switch based on a DMA completion, or based on a CSI2 line/frame end event. Refer the register description section for details of these registers.

It is important to note that the context switch only happens at the end of execution of a parameter-set and never in the middle of execution of a parameter-set. Also, the context switch is allowed to happen at the end of a parameter-set only if CONTEXTSW_EN register bit in the parameter-set is set. If this register is not set, then context switch will not happen at the end of that parameter-set. CONTEXTSW_EN should only be set in the parameter-sets corresponding to background context.

Context switch from the high priority context back to the background context typically occurs after the completion of all parameter-sets in the high priority context. But if an early exit is needed, i.e. after the execution of a certain high priority parameter-set, the register FORCED_CONTEXTSW_EN in that parameter-set can be set. This forces a context switch to the background context, without the need for any explicit context switch trigger. In such a case, when the next context switch trigger occurs, the high priority context execution resumes from where it left off. FORCED_CONTEXTSW_EN should be set only in the parameter-sets corresponding to the high priority context, and can be used for debug purposes. It can also be used when a large time gap is expected between execution of one high priority parameter-set and the next (e.g. due to the timing of the associated trigger sources), and it is desired that this time gap be used for some background context execution.[SK1]

Generally, for most computations, there is no ‘state information’ that carries forward across parameter-sets – i.e., each parameter-set is independent of the other. However, there are four specific items – namely, DC estimation accumulators, Interference statistics accumulators, TWID_INCR_DELTA_FRAC execution count and Recursive window execution count, which have state information in the form of accumulator value or execution count value that is applicable across parameter-sets. Therefore, while using the context switching feature, appropriate care has to be taken by the user to ensure that these features do not conflict when used in both the background context and high-priority context at the same time. The solution to this is to use these features only in one context at a time (eg. DC estimation and compensation can be used only in range FFT context), or to avoid jumping context between certain back-to-back parameter-sets (eg. Avoid jumping context between Interference statistics estimation and Interference mitigation steps), or to use the processor to save and restore state information (where possible). Also, care should be taken by the user to ensure that the usage of source and destination (ACCEL_MEMx) memories is mutually exclusive between the two contexts, so that there is no unintentional overwriting of the memory bank that is still under use by the background context by some computations of the high-priority context.

The operation of the state machine featuring the context switch capability is shown in . In the figure, Context1 and Thread1 indicate the background context (states shown in left side of the figure) and Context2 and Thread2 indicate the high-priority thread (states shown in right side of the figure). FSM_STATE indicates which state the HWA is currently in and is detailed in register description table below.

Copyright © 2025 Texas Instruments Incorporated

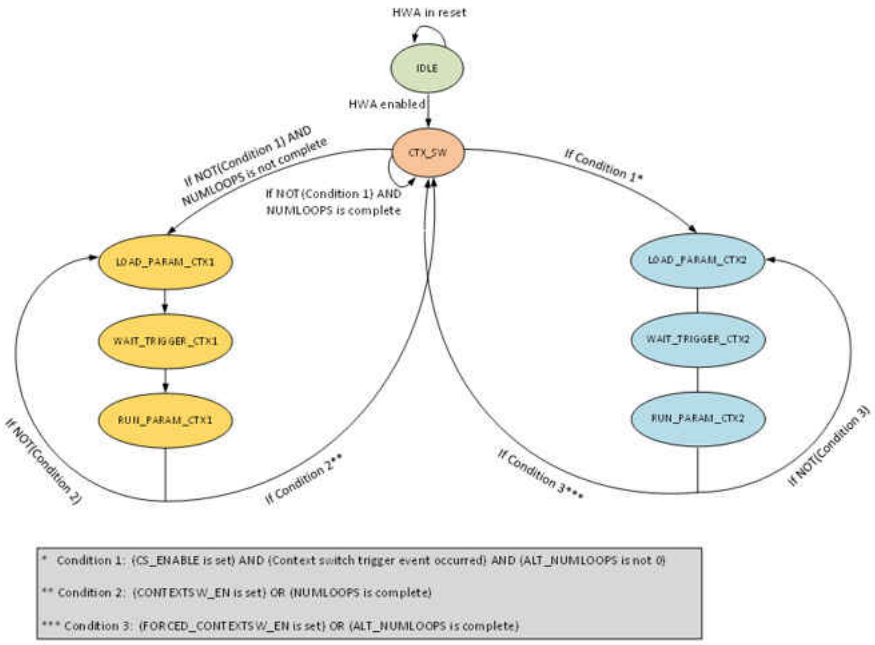

Figure 7-141. Context Switching State Machine

Whenever the NUMLOOPS of the background context completes, the state machine raises a loop complete interrupt (DSS_HWA_THREAD1_LOOP_INT). For every time the ALT_NUMLOOPS of the high-priority context completes, the state machine raises a different loop complete interrupt (DSS_HWA_THREAD2_LOOP_INT).

The accelerator's execution always begins with the background thread and proceeds to the high priority context upon receiving context switch trigger. If the application needs the operations to begin directly with the high priority context, then the user can define a "No Operation" parameter set in the background context and set CONTEXT_SW_EN in it, to indirectly achieve this.

Note that when the background context completes (i.e., NUMLOOPS is done), the state machine does not automatically move to IDLE state and remains in the CTX_SW state. This state means that the high-priority context switch can still happen even after all the operations for the background context are complete. The only way to make the state machine go back to IDLE state is by disabling the hardware accelerator completely.
In typical frame-by-frame processing applications, the host may disable the accelerator after the background context is completed and the necessary number of calls of the high priority context have been completed for one frame (counted by the host), and if necessary reconfigure the accelerator and trigger it again to restart the process.

Note that the accelerator's execution always begins with the background thread and proceeds to the high priority context upon receiving context switch trigger. If the application needs the operations to begin directly with the high priority context, then the user can define a "No Operation" parameter set in the background context and set CONTEXT_SW_EN in it, to indirectly achieve this.

7.4.11.2 State Machine – Context Switching – Register Descriptions

Table 7-103. Context Switching – Registers

Register	Width	Parameter Set	Description
CS_CONFIG.cs_enable	1	N	Context Switching Enable: 0: Disable context switching feature. 1: Enable context switching feature.

Copyright © 2025 Texas Instruments Incorporated

Table 7-103. Context Switching – Registers (continued)

Register	Width	Parameter Set	Description
PARAM_RAM_IDX_ALT.param_start_idx	10	N	Parameter-set start index for high-priority context: When context switch from background context to high-priority context happens, the state machine starts execution of high-priority context at the parameter-set indicated by this register. Valid range: 0-63
PARAM_RAM_IDX_ALT.param_end_idx	10	N	Parameter-set stop index for high-priority context: When running the high-priority context, this register indicates the last parameter-set in the sequence, before looping back to PARAM_START_IDX_ALT. Valid range: 0-63
PARAM_RAM_LOOP_ALT.numloops	12	N	Number of loops for high-priority context: This register specifies how many times (loops) for which the parameter-sets corresponding to the high-priority context are executed before returning back to resume the background context.
CS_CONFIG.cs_trigmode	4	N	Trigger mode selection for context switch: 0000b: Reserved 0001b: Reserved 0010b: Reserved 0011b: DMA-based trigger (used in conjunction with CS_TRIGSRC) 0100b: Hardware trigger (used in conjunction with CS_TRIGSRC) 0101b: Software trigger (used in conjunction with CS_FW2ACC_TRIG) Other values : Reserved
CS_CONFIG.cs_trgsrc	4	N	Trigger source for context switch: When CS_TRIGMODE = 0011b (i.e., in case of DMA-based trigger mode), this register specifies which DMA channel (i.e., which bit in DMA2CS_TRIG register) to wait for being set in order to perform context switch to high-priority context. When CS_TRIGMODE = 0100b (i.e., in case of hardware trigger mode), this register specifies which CSI2 trigger signal (out of the 20 possible trigger signals) to wait for in order to switch to high-priority context. The 20 signals are listed below, with CS_TRIGSRC = 0 corresponding to the last signal in the list: {CSI2A_FRAME_START[1:0], CSI2A_LINE_END[7:0], CSI2B_FRAME_START[1:0], CSI2B_LINE_END[7:0]}

Copyright © 2025 Texas Instruments Incorporated

Table 7-103. Context Switching – Registers (continued)

Register	Width	Parameter Set	Description
CONTEXTSW_EN	1	Y	Context switch enable register: This register is used in the background context. If this register is set to 1 in a parameter-set, then the state machine checks for a context switch trigger at the end of that parameter-set execution. If a trigger is found, the higher priority parameter-sets start executing. On returning from the higher priority context the next background parameter-set is run.
FORCED_CONTEXTSW_EN	1	Y	Forced context switch enable register: This register can be used in the higher priority context. If this register is set to 1 in a parameter-set, then the higher priority execution is interrupted after this parameter-set. And the execution switches to the next background parameter-set. Later when a context switch trigger is received the higher priority thread resumes from the parameter-set after the parameter-set having FORCED_CONTEXTSW_EN set.
CS_FW2ACC_TRIG.fw2hwa_trigger_cs	1	N	Software context switch trigger: When CS_TRIGMODE = 0101b, this register bit can be set by software to trigger a context switch.
FSM_STATE.FSM_STATE	3	N	3'b000: State Machine is in IDLE state 3'b111: State machine is in context switch state 3'b001: State machine is in thread 1 Load params state 3'b010: State machine is in thread 1 wait trigger state 3'b011: State machine is in thread 1 run state 3'b100: State machine is in thread 2 Load params state 3'b101: State machine is in thread 2 wait trigger state 3'b110: State machine is in thread 2 run state

7.4.12 Compression Engine

The accelerator includes a Compression Engine, which can compress or uncompress data in order to reduce storage RAM size requirements. For example, after range dimension FFT of the received RX data, the FFT results can be input to the Compression Engine and its output can be stored in a relatively smaller RAM in the device (e.g. L3 RAM). And before performing any Doppler FFT processing, the data can be retrieved from the RAM, input to the Compression Engine for uncompression, and then fed to any further Doppler FFT processing steps.

7.4.13 Radar Hardware Accelerator Registers

7.4.13.1 DSS_HWA_CFG Registers

DSS_HWA_CFG Registers lists the memory-mapped registers for the DSS_HWA_CFG registers. All register offset addresses not listed in DSS_HWA_CFG Registers should be considered as reserved locations and the register contents should not be modified.

Table 7-104. DSS_HWA_CFG Registers

Offset	Register Name	Register Notes	Section
0h	PID	PID register	PID Register (Offset = 0h) [Reset = 61800214h]

Copyright © 2025 Texas Instruments Incorporated

Table 7-104. DSS_HWA_CFG Registers (continued)

Offset	Register Name	Register Notes	Section
4h	PARAM_RAM_IDX		PARAM_RAM_IDX Register (Offset = 4h) [Reset = X]
8h	PARAM_RAM_LOOP		PARAM_RAM_LOOP Register (Offset = 8h) [Reset = X]
Ch	PARAM_RAM_IDX_ALT		PARAM_RAM_IDX_ALT Register (Offset = Ch) [Reset = X]
10h	PARAM_RAM_LOOP_ALT		PARAM_RAM_LOOP_ALT Register (Offset = 10h) [Reset = X]
18h	CS_CONFIG		CS_CONFIG Register (Offset = 18h) [Reset = X]
1Ch	FW2DMA_TRIG		FW2DMA_TRIG Register (Offset = 1Ch) [Reset = 0h]
20h	DMA2HWA_TRIG		DMA2HWA_TRIG Register (Offset = 20h) [Reset = 0h]
24h	SIGDMACH**n**DONE	Where **n** goes from 0-31	SIGDMACHnDONE Register (Offset = 24h +4h*Nn) [Reset = 1h]
A4h	FW2HWA_TRIG_0		FW2HWA_TRIG_0 Register (Offset = A4h) [Reset = X]
A8h	FW2HWA_TRIG_1		FW2HWA_TRIG_1 Register (Offset = A8h) [Reset = X]
ACh	CS_FW2ACC_TRIG		CS_FW2ACC_TRIG Register (Offset = ACh) [Reset = X]
B0h	BPM_PATTERN_0		BPM_PATTERN_0 Register (Offset = B0h) [Reset = 0h]
B4h	BPM_PATTERN_1		BPM_PATTERN_1 Register (Offset = B4h) [Reset = 0h]
B8h	BPM_PATTERN_2		BPM_PATTERN_2 Register (Offset = B8h) [Reset = 0h]
BCh	BPM_PATTERN_3		BPM_PATTERN_3 Register (Offset = BCh) [Reset = 0h]
C0h	BPM_PATTERN_4		BPM_PATTERN_4 Register (Offset = C0h) [Reset = 0h]
C4h	BPM_PATTERN_5		BPM_PATTERN_5 Register (Offset = C4h) [Reset = 0h]
C8h	BPM_PATTERN_6		BPM_PATTERN_6 Register (Offset = C8h) [Reset = 0h]

Copyright © 2025 Texas Instruments Incorporated

Table 7-104. DSS_HWA_CFG Registers (continued)

Offset	Register Name	Register Notes	Section
CCh	BPM_PATTERN_7		BPM_PATTERN_7 Register (Offset = CCh) [Reset = 0h]
D0h	BPM_RATE		BPM_RATE Register (Offset = D0h) [Reset = X]
D4h	PARAM_DONE_SET_STATUS_0		PARAM_DONE_SET_STATUS_0 Register (Offset = D4h) [Reset = 0h]
D8h	PARAM_DONE_SET_STATUS_1		PARAM_DONE_SET_STATUS_1 Register (Offset = D8h) [Reset = 0h]
DCh	PARAM_DONE_CLR_0		PARAM_DONE_CLR_0 Register (Offset = DCh) [Reset = 0h]
E0h	PARAM_DONE_CLR_1		PARAM_DONE_CLR_1 Register (Offset = E0h) [Reset = 0h]
E4h	TRIGGER_SET_STATUS_0		TRIGGER_SET_STATUS_0 Register (Offset = E4h) [Reset = 0h]
E8h	TRIGGER_SET_STATUS_1		TRIGGER_SET_STATUS_1 Register (Offset = E8h) [Reset = 0h]
ECh	TRIGGER_SET_IN_CLR_0		TRIGGER_SET_IN_CLR_0 Register (Offset = ECh) [Reset = X]
F0h	TRIGGER_SET_IN_CLR_1		TRIGGER_SET_IN_CLR_1 Register (Offset = F0h) [Reset = X]
F4h	DC_EST_RESET_SW		DC_EST_RESET_SW Register (Offset = F4h) [Reset = X]
F8h	DC_EST_CTRL		DC_EST_CTRL Register (Offset = F8h) [Reset = X]
FCh	DC_EST_I_**n**_VAL	Where **n** goes from 0-11	DC_EST_I_n_VAL Register (Offset = FCh + 4h*n) [Reset = X]
12Ch	DC_EST_Q_**n**_VAL	Where **n** goes from 0-11	DC_EST_Q_n_VAL Register (Offset = 12Ch + 4h*n) [Reset = X]
15Ch	DC_ACC_I_**n**_VAL_LSB	Where **n** goes from 0-11	DC_ACC_I_n_VAL_LSB Register (Offset = 15Ch + 8h*n) [Reset = 0h]
160h	DC_ACC_I_**n**_VAL_MSB	Where **n** goes from 0-11	DC_ACC_I_n_VAL_MSB Register (Offset = 160h + 8h*n) [Reset = X]

Copyright © 2025 Texas Instruments Incorporated

Table 7-104. DSS_HWA_CFG Registers (continued)

Offset	Register Name	Register Notes	Section
1BCh	DC_ACC_Q_**n**_VAL_LSB	Where **n** goes from 0-11	DC_ACC_Q_n_VAL_LSB Register (Offset = 1BCh + 8h*n) [Reset = 0h]
1C0h	DC_ACC_Q_**n**_VAL_MSB	Where **n** goes from 0-11	DC_ACC_Q_n_VAL_MSB Register (Offset = 1C0h + 8h*n) [Reset = X]
21Ch	DC_ACC_CLIP_STATUS		DC_ACC_CLIP_STATUS Register (Offset = 21Ch) [Reset = X]
220h	DC_EST_CLIP_STATUS		DC_EST_CLIP_STATUS Register (Offset = 220h) [Reset = X]
224h	DC_I**n**_SW	Where **n** goes from 0-11	DC_In_SW Register (Offset = 224h + 4h*n) [Reset = X]
254h	DC_Q**n**_SW	Where **n** goes from 0-11	DC_Qn_SW Register (Offset = 254h + 4h*n) [Reset = X]
284h	DC_SUB_CLIP		DC_SUB_CLIP Register (Offset = 284h) [Reset = X]
288h	DC_RESERVED_2		DC_RESERVED_2 Register (Offset = 288h) [Reset = 0h]
28Ch	DC_RESERVED_3		DC_RESERVED_3 Register (Offset = 28Ch) [Reset = 0h]
290h	DC_RESERVED_4		DC_RESERVED_4 Register (Offset = 290h) [Reset = 0h]
294h	DC_RESERVED_5		DC_RESERVED_5 Register (Offset = 294h) [Reset = 0h]
298h	INTF_STATS_RESET_SW		INTF_STATS_RESET_SW Register (Offset = 298h) [Reset = X]
29Ch	INTF_STATS_CTRL		INTF_STATS_CTRL Register (Offset = 29Ch) [Reset = X]
2A0h	INTF_LOC_THRESH_MAG**n**_VAL	Where **n** goes from 0-11	INTF_LOC_THRESH_MAGn_VAL Register (Offset = 2A0h + 4h*n) [Reset = X]
2D0h	INTF_LOC_THRESH_MAGDIFF**n**_VAL	Where **n** goes from 0-11	INTF_LOC_THRESH_MAGDIFFn_VAL Register (Offset = 2D0h + 4h*n) [Reset = X]
300h	INTF_LOC_COUNT_ALL_CHIRP		INTF_LOC_COUNT_ALL_CHIRP Register (Offset = 300h) [Reset = X]

Copyright © 2025 Texas Instruments Incorporated

Table 7-104. DSS_HWA_CFG Registers (continued)

Offset	Register Name	Register Notes	Section
304h	INTF_LOC_COUNT_ALL_FRAME		INTF_LOC_COUNT_ALL_FRAME Register (Offset = 304h) [Reset = X]
308h	INTF_STATS_MAG_ACC_**n**_LSB	Where **n** goes from 0-11	INTF_STATS_MAG_ACC_n_LSB Register (Offset = 308h + 8h*n) [Reset = 0h]
30Ch	INTF_STATS_MAG_ACC_**n**_MSB	Where **n** goes from 0-11	INTF_STATS_MAG_ACC_n_MSB Register (Offset = 30Ch + 8h*n) [Reset = X]
368h	INTF_STATS_MAGDIFF_ACC_**n**_LSB	Where **n** goes from 0-11	INTF_STATS_MAGDIFF_ACC_n_LSB Register (Offset = 368h + 8h*n) [Reset = 0h]
36Ch	INTF_STATS_MAGDIFF_ACC_**n**_MSB	Where **n** goes from 0-11	INTF_STATS_MAGDIFF_ACC_n_MSB Register (Offset = 36Ch + 8h*n) [Reset = X]
3C8h	INTF_LOC_THRESH_MAG**n**_SW	Where **n** goes from 0-11	INTF_LOC_THRESH_MAGn_SW Register (Offset = 3C8h + 4h*n) [Reset = X]
3F8h	INTF_LOC_THRESH_MAGDIFF**n**_SW	Where **n** goes from 0-11	INTF_LOC_THRESH_MAGDIFFn_SW Register (Offset = 3F8h + 4h*n) [Reset = X]
428h	INTF_STATS_ACC_CLIP_STATUS		INTF_STATS_ACC_CLIP_STATUS Register (Offset = 428h) [Reset = X]
42Ch	INTF_STATS_THRESH_CLIP_STATUS		INTF_STATS_THRESH_CLIP_STATUS Register (Offset = 42Ch) [Reset = X]
430h	INTF_MITG_WINDOW_PARAM_0		INTF_MITG_WINDOW_PARAM_0 Register (Offset = 430h) [Reset = X]
434h	INTF_MITG_WINDOW_PARAM_1		INTF_MITG_WINDOW_PARAM_1 Register (Offset = 434h) [Reset = X]
438h	INTF_MITG_WINDOW_PARAM_2		INTF_MITG_WINDOW_PARAM_2 Register (Offset = 438h) [Reset = X]
43Ch	INTF_MITG_WINDOW_PARAM_3		INTF_MITG_WINDOW_PARAM_3 Register (Offset = 43Ch) [Reset = X]

Copyright © 2025 Texas Instruments Incorporated

Table 7-104. DSS_HWA_CFG Registers (continued)

Offset	Register Name	Register Notes	Section
440h	INTF_MITG_WINDOW_PARAM_4		INTF_MITG_WINDOW_PARAM_4 Register (Offset = 440h) [Reset = X]
444h	INTF_STATS_SUM_MAG_VAL		INTF_STATS_SUM_MAG_VAL Register (Offset = 444h) [Reset = X]
448h	INTF_STATS_SUM_MAG_VAL_CLIP_STATUS		INTF_STATS_SUM_MAG_VAL_CLIP_STATUS Register (Offset = 448h) [Reset = X]
44Ch	INTF_STATS_SUM_MAGDIFF_VAL		INTF_STATS_SUM_MAGDIFF_VAL Register (Offset = 44Ch) [Reset = X]
450h	INTF_STATS_SUM_MAGDIFF_VAL_CLIP_STATUS		INTF_STATS_SUM_MAGDIFF_VAL_CLIP_STATUS Register (Offset = 450h) [Reset = X]
454h	INTERF_RESERVED_5		INTERF_RESERVED_5 Register (Offset = 454h) [Reset = 0h]
458h	ICMULT_SCALE**n**	Where **n** goes from 0-11	ICMULT_SCALEn Register (Offset = 458h + 4h*n) [Reset = X]
488h	QCMULT_SCALE**n**	Where **n** goes from 0-11	QCMULT_SCALEn Register (Offset = 488h + 4h*n) [Reset = X]
4B8h	TWID_INCR_DELTA_FRAC		TWID_INCR_DELTA_FRAC Register (Offset = 4B8h) [Reset = X]
4BCh	RECWIN_RESET_SW		RECWIN_RESET_SW Register (Offset = 4BCh) [Reset = X]
4C0h	TWID_INCR_DELTA_FRAC_RESET_SW		TWID_INCR_DELTA_FRAC_RESET_SW Register (Offset = 4C0h) [Reset = X]
4C4h	TWID_INCR_DELTA_FRAC_CLIP_STATUS		TWID_INCR_DELTA_FRAC_CLIP_STATUS Register (Offset = 4C4h) [Reset = X]
4C8h	RECWIN_INIT_KVAL		RECWIN_INIT_KVAL Register (Offset = 4C8h) [Reset = X]
4CCh	CMULT_RESERVED_2		CMULT_RESERVED_2 Register (Offset = 4CCh) [Reset = 0h]
4D0h	CHAN_COMB_SIZE		CHAN_COMB_SIZE Register (Offset = 4D0h) [Reset = X]

Copyright © 2025 Texas Instruments Incorporated

Table 7-104. DSS_HWA_CFG Registers (continued)

Offset	Register Name	Register Notes	Section
4D4h	CHAN_COMB_VEC_0		CHAN_COMB_VEC_0 Register (Offset = 4D4h) [Reset = 0h]
4D8h	CHAN_COMB_VEC_1		CHAN_COMB_VEC_1 Register (Offset = 4D8h) [Reset = 0h]
4DCh	CHAN_COMB_VEC_2		CHAN_COMB_VEC_2 Register (Offset = 4DCh) [Reset = 0h]
4E0h	CHAN_COMB_VEC_3		CHAN_COMB_VEC_3 Register (Offset = 4E0h) [Reset = 0h]
4E4h	CHAN_COMB_VEC_4		CHAN_COMB_VEC_4 Register (Offset = 4E4h) [Reset = 0h]
4E8h	CHAN_COMB_VEC_5		CHAN_COMB_VEC_5 Register (Offset = 4E8h) [Reset = 0h]
4ECh	CHAN_COMB_VEC_6		CHAN_COMB_VEC_6 Register (Offset = 4ECh) [Reset = 0h]
4F0h	CHAN_COMB_VEC_7		CHAN_COMB_VEC_7 Register (Offset = 4F0h) [Reset = 0h]
4F4h	CHANNEL_COMB_CLIP_STATUS		CHANNEL_COMB_CLIP_STATUS Register (Offset = 4F4h) [Reset = X]
4F8h	ZERO_INSERT_NUM		ZERO_INSERT_NUM Register (Offset = 4F8h) [Reset = X]
4FCh	ZERO_INSERT_MASK_0		ZERO_INSERT_MASK_0 Register (Offset = 4FCh) [Reset = 0h]
500h	ZERO_INSERT_MASK_1		ZERO_INSERT_MASK_1 Register (Offset = 500h) [Reset = 0h]
504h	ZERO_INSERT_MASK_2		ZERO_INSERT_MASK_2 Register (Offset = 504h) [Reset = 0h]
508h	ZERO_INSERT_MASK_3		ZERO_INSERT_MASK_3 Register (Offset = 508h) [Reset = 0h]
50Ch	ZERO_INSERT_MASK_4		ZERO_INSERT_MASK_4 Register (Offset = 50Ch) [Reset = 0h]
510h	ZERO_INSERT_MASK_5		ZERO_INSERT_MASK_5 Register (Offset = 510h) [Reset = 0h]

Copyright © 2025 Texas Instruments Incorporated

Table 7-104. DSS_HWA_CFG Registers (continued)

Offset	Register Name	Register Notes	Section
514h	ZERO_INSERT_MASK_6		ZERO_INSERT_MASK_6 Register (Offset = 514h) [Reset = 0h]
518h	ZERO_INSERT_MASK_7		ZERO_INSERT_MASK_7 Register (Offset = 518h) [Reset = 0h]
51Ch	ZERO_INSERT_RESERVED_1		ZERO_INSERT_RESERVED_1 Register (Offset = 51Ch) [Reset = 0h]
520h	ZERO_INSERT_RESERVED_2		ZERO_INSERT_RESERVED_2 Register (Offset = 520h) [Reset = 0h]
524h	ZERO_INSERT_RESERVED_3		ZERO_INSERT_RESERVED_3 Register (Offset = 524h) [Reset = 0h]
528h	ZERO_INSERT_RESERVED_4		ZERO_INSERT_RESERVED_4 Register (Offset = 528h) [Reset = 0h]
52Ch	LFSR_SEED		LFSR_SEED Register (Offset = 52Ch) [Reset = X]
530h	LFSR_LOAD		LFSR_LOAD Register (Offset = 530h) [Reset = X]
534h	DITHER_TWID_EN		DITHER_TWID_EN Register (Offset = 534h) [Reset = X]
538h	FFT_CLIP		FFT_CLIP Register (Offset = 538h) [Reset = X]
53Ch	CLR_FFTCLIP		CLR_FFTCLIP Register (Offset = 53Ch) [Reset = X]
540h	CLR_CLIP_MISC		CLR_CLIP_MISC Register (Offset = 540h) [Reset = X]
544h	IP_OP_FORMATTER_CLIP_STATUS		IP_OP_FORMATTER_CLIP_STATUS Register (Offset = 544h) [Reset = X]
548h	FFT_RESERVED_1		FFT_RESERVED_1 Register (Offset = 548h) [Reset = 0h]
54Ch	FFT_RESERVED_2		FFT_RESERVED_2 Register (Offset = 54Ch) [Reset = 0h]
550h	FFT_RESERVED_3		FFT_RESERVED_3 Register (Offset = 550h) [Reset = 0h]
554h	MAX1_VALUE		MAX1_VALUE Register (Offset = 554h) [Reset = X]

Copyright © 2025 Texas Instruments Incorporated

Table 7-104. DSS_HWA_CFG Registers (continued)

Offset	Register Name	Register Notes	Section
558h	MAX2_VALUE		MAX2_VALUE Register (Offset = 558h) [Reset = X]
55Ch	MAX3_VALUE		MAX3_VALUE Register (Offset = 55Ch) [Reset = X]
560h	MAX4_VALUE		MAX4_VALUE Register (Offset = 560h) [Reset = X]
564h	MAX1_INDEX		MAX1_INDEX Register (Offset = 564h) [Reset = X]
568h	MAX2_INDEX		MAX2_INDEX Register (Offset = 568h) [Reset = X]
56Ch	MAX3_INDEX		MAX3_INDEX Register (Offset = 56Ch) [Reset = X]
570h	MAX4_INDEX		MAX4_INDEX Register (Offset = 570h) [Reset = X]
574h	I_SUM1_LSB		I_SUM1_LSB Register (Offset = 574h) [Reset = 0h]
578h	I_SUM1_MSB		I_SUM1_MSB Register (Offset = 578h) [Reset = X]
57Ch	I_SUM2_LSB		I_SUM2_LSB Register (Offset = 57Ch) [Reset = 0h]
580h	I_SUM2_MSB		I_SUM2_MSB Register (Offset = 580h) [Reset = X]
584h	I_SUM3_LSB		I_SUM3_LSB Register (Offset = 584h) [Reset = 0h]
588h	I_SUM3_MSB		I_SUM3_MSB Register (Offset = 588h) [Reset = X]
58Ch	I_SUM4_LSB		I_SUM4_LSB Register (Offset = 58Ch) [Reset = 0h]
590h	I_SUM4_MSB		I_SUM4_MSB Register (Offset = 590h) [Reset = X]
594h	Q_SUM1_LSB		Q_SUM1_LSB Register (Offset = 594h) [Reset = 0h]
598h	Q_SUM1_MSB		Q_SUM1_MSB Register (Offset = 598h) [Reset = X]
59Ch	Q_SUM2_LSB		Q_SUM2_LSB Register (Offset = 59Ch) [Reset = 0h]
5A0h	Q_SUM2_MSB		Q_SUM2_MSB Register (Offset = 5A0h) [Reset = X]

Copyright © 2025 Texas Instruments Incorporated

Table 7-104. DSS_HWA_CFG Registers (continued)

Offset	Register Name	Register Notes	Section
5A4h	Q_SUM3_LSB		Q_SUM3_LSB Register (Offset = 5A4h) [Reset = 0h]
5A8h	Q_SUM3_MSB		Q_SUM3_MSB Register (Offset = 5A8h) [Reset = X]
5ACh	Q_SUM4_LSB		Q_SUM4_LSB Register (Offset = 5ACh) [Reset = 0h]
5B0h	Q_SUM4_MSB		Q_SUM4_MSB Register (Offset = 5B0h) [Reset = X]
5B4h	FFTSUMDIV		FFTSUMDIV Register (Offset = 5B4h) [Reset = X]
5B8h	MAX2D_OFFSET_DIM1		MAX2D_OFFSET_DIM1 Register (Offset = 5B8h) [Reset = X]
5BCh	MAX2D_OFFSET_DIM2		MAX2D_OFFSET_DIM2 Register (Offset = 5BCh) [Reset = X]
5C0h	CDF_CNT_THRESH		CDF_CNT_THRESH Register (Offset = 5C0h) [Reset = X]
5C4h	STATS_RESERVED_1		STATS_RESERVED_1 Register (Offset = 5C4h) [Reset = 0h]
5C8h	STATS_RESERVED_2		STATS_RESERVED_2 Register (Offset = 5C8h) [Reset = 0h]
5CCh	STATS_RESERVED_3		STATS_RESERVED_3 Register (Offset = 5CCh) [Reset = 0h]
5D0h	STATS_RESERVED_4		STATS_RESERVED_4 Register (Offset = 5D0h) [Reset = 0h]
5D4h	STATS_RESERVED_5		STATS_RESERVED_5 Register (Offset = 5D4h) [Reset = 0h]
5D8h	CFAR_PEAKCNT		CFAR_PEAKCNT Register (Offset = 5D8h) [Reset = X]
5DCh	CFAR_DET_THR		CFAR_DET_THR Register (Offset = 5DCh) [Reset = X]
5E0h	CFAR_TEST_REG		CFAR_TEST_REG Register (Offset = 5E0h) [Reset = X]
5E4h	CFAR_THRESH		CFAR_THRESH Register (Offset = 5E4h) [Reset = X]
5E8h	CFAR_RESERVED_1		CFAR_RESERVED_1 Register (Offset = 5E8h) [Reset = 0h]
5ECh	CFAR_RESERVED_2		CFAR_RESERVED_2 Register (Offset = 5ECh) [Reset = 0h]

Copyright © 2025 Texas Instruments Incorporated

Table 7-104. DSS_HWA_CFG Registers (continued)

Offset	Register Name	Register Notes	Section
5F0h	CFAR_RESERVED_3		CFAR_RESERVED_3 Register (Offset = 5F0h) [Reset = 0h]
5F4h	CFAR_RESERVED_4		CFAR_RESERVED_4 Register (Offset = 5F4h) [Reset = 0h]
5F8h	CMP_EGE_K0123		CMP_EGE_K0123 Register (Offset = 5F8h) [Reset = X]
5FCh	CMP_EGE_K4567		CMP_EGE_K4567 Register (Offset = 5FCh) [Reset = X]
600h	MEM_INIT_START		MEM_INIT_START Register (Offset = 600h) [Reset = X]
604h	MEM_INIT_DONE		MEM_INIT_DONE Register (Offset = 604h) [Reset = X]
608h	MEM_INIT_STATUS		MEM_INIT_STATUS Register (Offset = 608h) [Reset = X]
60Ch	LM_THRESH_VAL		LM_THRESH_VAL Register (Offset = 60Ch) [Reset = 0h]
610h	LM_2DSTATS_BASE_ADDR		LM_2DSTATS_BASE_ADDR Register (Offset = 610h) [Reset = X]
614h	HWA_SAFETY_EN		HWA_SAFETY_EN Register (Offset = 614h) [Reset = X]
618h	HWA_SAFETY_ERR_MASK		HWA_SAFETY_ERR_MASK Register (Offset = 618h) [Reset = X]
61Ch	HWA_SAFETY_ERR_STATUS		HWA_SAFETY_ERR_STATUS Register (Offset = 61Ch) [Reset = X]
620h	HWA_SAFETY_ERR_STATUS_RAW		HWA_SAFETY_ERR_STATUS_RAW Register (Offset = 620h) [Reset = X]
624h	HWA_SAFETY_DMEM0_ERR_ADDR		HWA_SAFETY_DMEM0_ERR_ADDR Register (Offset = 624h) [Reset = X]
628h	HWA_SAFETY_DMEM1_ERR_ADDR		HWA_SAFETY_DMEM1_ERR_ADDR Register (Offset = 628h) [Reset = X]
62Ch	HWA_SAFETY_DMEM2_ERR_ADDR		HWA_SAFETY_DMEM2_ERR_ADDR Register (Offset = 62Ch) [Reset = X]

Copyright © 2025 Texas Instruments Incorporated

Table 7-104. DSS_HWA_CFG Registers (continued)

Offset	Register Name	Register Notes	Section
630h	HWA_SAFETY_DMEM3_ERR_ADDR		HWA_SAFETY_DMEM3_ERR_ADDR Register (Offset = 630h) [Reset = X]
634h	HWA_SAFETY_DMEM4_ERR_ADDR		HWA_SAFETY_DMEM4_ERR_ADDR Register (Offset = 634h) [Reset = X]
638h	HWA_SAFETY_DMEM5_ERR_ADDR		HWA_SAFETY_DMEM5_ERR_ADDR Register (Offset = 638h) [Reset = X]
63Ch	HWA_SAFETY_DMEM6_ERR_ADDR		HWA_SAFETY_DMEM6_ERR_ADDR Register (Offset = 63Ch) [Reset = X]
640h	HWA_SAFETY_DMEM7_ERR_ADDR		HWA_SAFETY_DMEM7_ERR_ADDR Register (Offset = 640h) [Reset = X]
644h	HWA_SAFETY_WINDOW_RAM_ERR_ADDR		HWA_SAFETY_WINDOW_RAM_ERR_ADDR Register (Offset = 644h) [Reset = X]
648h	MEM_ACCESS_ERR_STATUS		MEM_ACCESS_ERR_STATUS Register (Offset = 648h) [Reset = X]
64Ch	LOOP_CNT		LOOP_CNT Register (Offset = 64Ch) [Reset = X]
650h	PARAMADDR		PARAMADDR Register (Offset = 650h) [Reset = X]
654h	PARAMADDR_CPUINTR0		PARAMADDR_CPUINTR0 Register (Offset = 654h) [Reset = X]
658h	PARAMADDR_CPUINTR1		PARAMADDR_CPUINTR1 Register (Offset = 658h) [Reset = X]
65Ch	FSM_STATE		FSM_STATE Register (Offset = 65Ch) [Reset = X]
660h	SINGLE_STEP_EN		SINGLE_STEP_EN Register (Offset = 660h) [Reset = X]
664h	SINGLE_STEP_TRIG		SINGLE_STEP_TRIG Register (Offset = 664h) [Reset = X]
668h	HWA_DMEM_A_BUS_SAFETY_CTRL		HWA_DMEM_A_BUS_SAFETY_CTRL Register (Offset = 668h) [Reset = X]

Copyright © 2025 Texas Instruments Incorporated

Table 7-104. DSS_HWA_CFG Registers (continued)

Offset	Register Name	Register Notes	Section
66Ch	HWA_DMEM_A_BUS_SAFETY_FI		HWA_DMEM_A_BUS_SAFETY_FI Register (Offset = 66Ch) [Reset = X]
670h	HWA_DMEM_A_BUS_SAFETY_ERR		HWA_DMEM_A_BUS_SAFETY_ERR Register (Offset = 670h) [Reset = 0h]
678h	HWA_DMEM_A_BUS_SAFETY_ERR_STAT_DATA0		HWA_DMEM_A_BUS_SAFETY_ERR_STAT_DATA0 Register (Offset = 678h) [Reset = X]
67Ch	HWA_DMEM_B_BUS_SAFETY_CTRL		HWA_DMEM_B_BUS_SAFETY_CTRL Register (Offset = 67Ch) [Reset = X]
680h	HWA_DMEM_B_BUS_SAFETY_FI		HWA_DMEM_B_BUS_SAFETY_FI Register (Offset = 680h) [Reset = X]
684h	HWA_DMEM_B_BUS_SAFETY_ERR		HWA_DMEM_B_BUS_SAFETY_ERR Register (Offset = 684h) [Reset = 0h]
68Ch	HWA_DMEM_B_BUS_SAFETY_ERR_STAT_DATA0		HWA_DMEM_B_BUS_SAFETY_ERR_STAT_DATA0 Register (Offset = 68Ch) [Reset = X]
FD0h	HW_SPARE_RW0		HW_SPARE_RW0 Register (Offset = FD0h) [Reset = 0h]
FD4h	HW_SPARE_RW1		HW_SPARE_RW1 Register (Offset = FD4h) [Reset = 0h]
FD8h	HW_SPARE_RW2		HW_SPARE_RW2 Register (Offset = FD8h) [Reset = 0h]
FDCh	HW_SPARE_RW3		HW_SPARE_RW3 Register (Offset = FDCh) [Reset = 0h]
FE0h	HW_SPARE_RO0		HW_SPARE_RO0 Register (Offset = FE0h) [Reset = 0h]
FE4h	HW_SPARE_RO1		HW_SPARE_RO1 Register (Offset = FE4h) [Reset = 0h]
FE8h	HW_SPARE_RO2		HW_SPARE_RO2 Register (Offset = FE8h) [Reset = 0h]
FECh	HW_SPARE_RO3		HW_SPARE_RO3 Register (Offset = FECh) [Reset = 0h]
FF0h	HW_SPARE_WPH		HW_SPARE_WPH Register (Offset = FF0h) [Reset = 0h]

Copyright © 2025 Texas Instruments Incorporated

Table 7-104. DSS_HWA_CFG Registers (continued)

Offset	Register Name	Register Notes	Section
FF4h	HW_SPARE_REC		HW_SPARE_REC Register (Offset = FF4h) [Reset = 0h]
1008h	LOCK0_KICK0	- KICK0 component	LOCK0_KICK0 Register (Offset = 1008h) [Reset = 0h]
100Ch	LOCK0_KICK1	- KICK1 component	LOCK0_KICK1 Register (Offset = 100Ch) [Reset = 0h]
1010h	intr_raw_status	Interrupt Raw Status/Set Register	intr_raw_status Register (Offset = 1010h) [Reset = X]
1014h	intr_enabled_status_clear	Interrupt Enabled Status/Clear register	intr_enabled_status_clear Register (Offset = 1014h) [Reset = X]
1018h	intr_enable	Interrupt Enable register	intr_enable Register (Offset = 1018h) [Reset = X]
101Ch	intr_enable_clear	Interrupt Enable Clear register	intr_enable_clear Register (Offset = 101Ch) [Reset = X]
1020h	eoi	EOI register	eoi Register (Offset = 1020h) [Reset = X]
1024h	fault_address	Fault Address register	fault_address Register (Offset = 1024h) [Reset = 0h]
1028h	fault_type_status	Fault Type Status register	fault_type_status Register (Offset = 1028h) [Reset = X]
102Ch	fault_attr_status	Fault Attribute Status register	fault_attr_status Register (Offset = 102Ch) [Reset = 0h]
1030h	fault_clear	Fault Clear register	fault_clear Register (Offset = 1030h) [Reset = X]

Complex bit access types are encoded to fit into small table cells. Table 7-105 shows the codes that are used for access types in this section.

Table 7-105. DSS_HWA_CFG Access Type Codes

Access Type	Code	Description
Read Type		
R	R	Read
Write Type		
W	W	Write
W1C	W 1C	Write 1 to clear
W1S	W 1S	Write 1 to set
Reset or Default Value		
-n		Value after reset or the default value
Register Array Variables		

Copyright © 2025 Texas Instruments Incorporated

Table 7-105. DSS_HWA_CFG Access Type Codes (continued)

Access Type	Code	Description
i,j,k,l,m,n		When these variables are used in a register name, an offset, or an address, they refer to the value of a register array where the register is part of a group of repeating registers. The register groups form a hierarchical structure and the array is represented with a formula.
y		When this variable is used in a register name, an offset, or an address it refers to the value of a register array.

Copyright © 2025 Texas Instruments Incorporated

7.4.13.1.1 PID Register (Offset = 0h) [Reset = 61800214h]

PID is shown in the figure and described in the table.

Return to the Summary Table.

PID register

Figure 7-139. PID Register

31	30	29	28	27	26	25	24
PID_msb16							
R-6180h							
23	22	21	20	19	18	17	16
PID_msb16							
R-6180h							
15	14	13	12	11	10	9	8
PID_misc					PID_major		
R-0h					R-2h		
7	6	5	4	3	2	1	0
PID_custom		PID_minor					
R-0h		R-14h					

Table 7-106. PID Register Field Descriptions

Bit	Field	Type	Reset	Description
31-16	PID_msb16	R	6180h	
15-11	PID_misc	R	0h	
10-8	PID_major	R	2h	
7-6	PID_custom	R	0h	
5-0	PID_minor	R	14h	

Copyright © 2025 Texas Instruments Incorporated

7.4.13.1.2 PARAM_RAM_IDX Register (Offset = 4h) [Reset = X]

PARAM_RAM_IDX is shown in the figure and described in the table.

Return to the Summary Table.

Figure 7-140. PARAM_RAM_IDX Register

31	30	29	28	27	26	25	24	23	22	21	20	19	18	17	16
RESERVED						param_end_idx									
R/W-X						R/W-0h									
15	14	13	12	11	10	9	8	7	6	5	4	3	2	1	0
RESERVED						param_start_idx									
R/W-X						R/W-0h									

Table 7-107. PARAM_RAM_IDX Register Field Descriptions

Bit	Field	Type	Reset	Description
31-26	RESERVED	R/W	X	
25-16	param_end_idx	R/W	0h	The state machine starts at the parameter-set specified by PARAM_START_IDX and loads each parameter-set one after another and runs the accelerator as per that configuration. When the state machine reaches the parameter-set specified by PARAM_ENS_IDX, it loops back to the start index as specified by PARAM_START_IDX.Valid range : 0-63
15-10	RESERVED	R/W	X	
9-0	param_start_idx	R/W	0h	The state machine starts at the parameter-set specified by PARAM_START_IDX and loads each parameter-set one after another and runs the accelerator as per that configuration. When the state machine reaches the parameter-set specified by PARAM_ENS_IDX, it loops back to the start index as specified by PARAM_START_IDX..Valid range : 0-63

Copyright © 2025 Texas Instruments Incorporated

7.4.13.1.3 PARAM_RAM_LOOP Register (Offset = 8h) [Reset = X]

PARAM_RAM_LOOP is shown in the figure and described in the table.

Return to the Summary Table.

Figure 7-141. PARAM_RAM_LOOP Register

31	30	29	28	27	26	25	24	23	22	21	20	19	18	17	16	15	14	13	12	11	10	9	8	7	6	5	4	3	2	1	0
RESERVED																				numloops											
R/W-X																				R/W-0h											

Table 7-108. PARAM_RAM_LOOP Register Field Descriptions

Bit	Field	Type	Reset	Description
31-12	RESERVED	R/W	X	
11-0	numloops	R/W	0h	Number of loops: This register controls the number of times the State Machine will loop through the parameter-sets (from a programmed start index till a programmed end index) and run them. The maximum number of times the loop can be made is run is 4094. A value of zero programmed in this register means that the looping mechanism is disabled.

Copyright © 2025 Texas Instruments Incorporated

7.4.13.1.4 PARAM_RAM_IDX_ALT Register (Offset = Ch) [Reset = X]

PARAM_RAM_IDX_ALT is shown in the figure and described in the table.

Return to the Summary Table.

Figure 7-142. PARAM_RAM_IDX_ALT Register

31	30	29	28	27	26	25	24	23	22	21	20	19	18	17	16
RESERVED						param_end_idx									
R/W-X						R/W-0h									
15	14	13	12	11	10	9	8	7	6	5	4	3	2	1	0
RESERVED						param_start_idx									
R/W-X						R/W-0h									

Table 7-109. PARAM_RAM_IDX_ALT Register Field Descriptions

Bit	Field	Type	Reset	Description
31-26	RESERVED	R/W	X	
25-16	param_end_idx	R/W	0h	PARAM_END_IDX for alternate thread
15-10	RESERVED	R/W	X	
9-0	param_start_idx	R/W	0h	PARAM_START_IDX for alternate thread

Copyright © 2025 Texas Instruments Incorporated

7.4.13.1.5 PARAM_RAM_LOOP_ALT Register (Offset = 10h) [Reset = X]

PARAM_RAM_LOOP_ALT is shown in the figure and described in the table.

Return to the Summary Table.

Figure 7-143. PARAM_RAM_LOOP_ALT Register

31	30	29	28	27	26	25	24	23	22	21	20	19	18	17	16	15	14	13	12	11	10	9	8	7	6	5	4	3	2	1	0
RESERVED																				numloops											
R/W-X																				R/W-0h											

Table 7-110. PARAM_RAM_LOOP_ALT Register Field Descriptions

Bit	Field	Type	Reset	Description
31-12	RESERVED	R/W	X	
11-0	numloops	R/W	0h	NUMLOOPS for alternate thread

Copyright © 2025 Texas Instruments Incorporated

7.4.13.1.6 CS_CONFIG Register (Offset = 18h) [Reset = X]

CS_CONFIG is shown in the figure and described in the table.

Return to the Summary Table.

Figure 7-144. CS_CONFIG Register

31	30	29	28	27	26	25	24
RESERVED							
R/W-X							
23	22	21	20	19	18	17	16
RESERVED			cs_trgsrc				
R/W-X			R/W-0h				
15	14	13	12	11	10	9	8
RESERVED				cs_trigmode			
R/W-X				R/W-5h			
7	6	5	4	3	2	1	0
RESERVED							cs_enable
R/W-X							R/W-0h

Table 7-111. CS_CONFIG Register Field Descriptions

Bit	Field	Type	Reset	Description
31-21	RESERVED	R/W	X	
20-16	cs_trgsrc	R/W	0h	In case of DMA trigger, this specifies which DMA channel (which bit in DMA2HWA_TRIG register) to wait for In case of HW-based trigger, this specifies which CSI2 trigger signal (out of the 20 possible trigger signals) to wait for
15-12	RESERVED	R/W	X	
11-8	cs_trigmode	R/W	5h	Trigger mode for context switching 0011b: DMA-based trigger (used in conjunction with DMA2HWA_TRIGGER and CS_TRIGSRC registers described below) 0100b: Hardware based trigger (used in conjunction with CS_TRIGSRC) Valid programmation 0-19, where 0 selct right most trigger and 19 selects left most trigger below {CSI2A_FRAME_START[1:0],CSI2A_LINE_END[7:0],CSI2B_FRAME_START[1:0],CSI2B_LINE_END[7:0]} 0101b: Software trigger (used in conjunction with CS_FW2ACC_TRIG register described below)
7-1	RESERVED	R/W	X	
0	cs_enable	R/W	0h	Master enable for the Conxtext switching feature.Setting this bit will allow context switching to ALT thread if it is enabled in the Param set

Copyright © 2025 Texas Instruments Incorporated

7.4.13.1.7 FW2DMA_TRIG Register (Offset = 1Ch) [Reset = 0h]

FW2DMA_TRIG is shown in the figure and described in the table.

Return to the Summary Table.

Figure 7-145. FW2DMA_TRIG Register

31	30	29	28	27	26	25	24	23	22	21	20	19	18	17	16	15	14	13	12	11	10	9	8	7	6	5	4	3	2	1	0
fw2dma_trigger																															
R/W-0h																															

Table 7-112. FW2DMA_TRIG Register Field Descriptions

Bit	Field	Type	Reset	Description
31-0	fw2dma_trigger	R/W	0h	SW Override for HWA Trigger to DMA by the CPU It s a Self clearing bit

Copyright © 2025 Texas Instruments Incorporated

7.4.13.1.8 DMA2HWA_TRIG Register (Offset = 20h) [Reset = 0h]

DMA2HWA_TRIG is shown in the figure and described in the table.

Return to the Summary Table.

Figure 7-146. DMA2HWA_TRIG Register

31	30	29	28	27	26	25	24	23	22	21	20	19	18	17	16	15	14	13	12	11	10	9	8	7	6	5	4	3	2	1	0
dma2hwa_trigger																															
R/W-0h																															

Table 7-113. DMA2HWA_TRIG Register Field Descriptions

Bit	Field	Type	Reset	Description
31-0	dma2hwa_trigger	R/W	0h	DMA trigger register: This register is relevant whenever DMA triggered mode is used (i.e., TRIGMODE = 011b). Whenever a DMA channel has finished copying input samples into the local memory of the accelerator and wants to trigger the accelerator, the procedure to follow is to use a second linked DMA channel to write a 16-bit one-hot signature into this register to trigger the accelerator. In DMA triggered mode, the State Machine keeps monitoring this 32-bit register and waits as long as a specific bit (see DMA2ACC_CHANNEL_TRIGSRC) in this register is zero. The second linked DMA channel writes a one-hot signature that sets the specific bit, so that the State Machine gets triggered and starts the accelerator operations for that parameter-set. It s a Self clearing bit

Copyright © 2025 Texas Instruments Incorporated

7.4.13.1.9 SIGDMACHnDONE Register (Offset = 24h +4h*Nn) [Reset = 1h]

SIGDMACH**n**DONE where n goes from 0-31 is shown in the figure and described in the table.

Return to the Summary Table.

Figure 7-147. SIGDMACHnDONE Register

31	30	29	28	27	26	25	24	23	22	21	20	19	18	17	16	15	14	13	12	11	10	9	8	7	6	5	4	3	2	1	0
SIGDMACH**n**DONE																															
R-1h																															

Table 7-114. SIGDMACHnDONE Register Field Descriptions

Bit	Field	Type	Reset	Description
31-0	SIGDMACH**n**DONE	R	1h	Signature for DMA channel **N** completion : 0x0000_000**N** Linked DMA can copy from one of these SIG_DMACHx_DONE registers into DMA2HWA_TRIGGER register to set the appropriate register bit to signal the completion of DMA and trigger the accelerator

Copyright © 2025 Texas Instruments Incorporated

7.4.13.1.10 FW2HWA_TRIG_0 Register (Offset = A4h) [Reset = X]

FW2HWA_TRIG_0 is shown in the figure and described in the table.

Return to the Summary Table.

Figure 7-148. FW2HWA_TRIG_0 Register

31	30	29	28	27	26	25	24
RESERVED							
R/W-X							
23	22	21	20	19	18	17	16
RESERVED							
R/W-X							
15	14	13	12	11	10	9	8
RESERVED							
R/W-X							
7	6	5	4	3	2	1	0
RESERVED							fw2hwa_trigger_0
R/W-X							R/W-0h

Table 7-115. FW2HWA_TRIG_0 Register Field Descriptions

Bit	Field	Type	Reset	Description
31-1	RESERVED	R/W	X	
0	fw2hwa_trigger_0	R/W	0h	Software trigger bit 0: This register bit is relevant whenever software triggered mode is used (i.e., TRIGMODE = 001b). The main processor software can set this register bit, so that the State Machine gets triggered and starts the accelerator operations for that parameter-set. It s a Self clearing bit

Copyright © 2025 Texas Instruments Incorporated

7.4.13.1.11 FW2HWA_TRIG_1 Register (Offset = A8h) [Reset = X]

FW2HWA_TRIG_1 is shown in the figure and described in the table.

Return to the Summary Table.

Figure 7-149. FW2HWA_TRIG_1 Register

31	30	29	28	27	26	25	24
RESERVED							
R/W-X							
23	22	21	20	19	18	17	16
RESERVED							
R/W-X							
15	14	13	12	11	10	9	8
RESERVED							
R/W-X							
7	6	5	4	3	2	1	0
RESERVED							fw2hwa_trigger_1
R/W-X							R/W-0h

Table 7-116. FW2HWA_TRIG_1 Register Field Descriptions

Bit	Field	Type	Reset	Description
31-1	RESERVED	R/W	X	
0	fw2hwa_trigger_1	R/W	0h	Software trigger bit 1: This register bit is relevant whenever software triggered mode is used (i.e., TRIGMODE = 111b). The main processor software can set this register bit, so that the State Machine gets triggered and starts the accelerator operations for that parameter-set. It s a Self clearing bit

Copyright © 2025 Texas Instruments Incorporated

7.4.13.1.12 CS_FW2ACC_TRIG Register (Offset = ACh) [Reset = X]

CS_FW2ACC_TRIG is shown in the figure and described in the table.

Return to the Summary Table.

Figure 7-150. CS_FW2ACC_TRIG Register

31	30	29	28	27	26	25	24
RESERVED							
R/W-X							
23	22	21	20	19	18	17	16
RESERVED							
R/W-X							
15	14	13	12	11	10	9	8
RESERVED							
R/W-X							
7	6	5	4	3	2	1	0
RESERVED							fw2hwa_trigger_cs
R/W-X							R/W-0h

Table 7-117. CS_FW2ACC_TRIG Register Field Descriptions

Bit	Field	Type	Reset	Description
31-1	RESERVED	R/W	X	
0	fw2hwa_trigger_cs	R/W	0h	CPU can set this register bit to trigger a context switch when CS_TRIGMODE = 101b It s a Self clearing bit

Copyright © 2025 Texas Instruments Incorporated

7.4.13.1.13 BPM_PATTERN_0 Register (Offset = B0h) [Reset = 0h]

BPM_PATTERN_0 is shown in the figure and described in the table.

Return to the Summary Table.

Figure 7-151. BPM_PATTERN_0 Register

31	30	29	28	27	26	25	24	23	22	21	20	19	18	17	16	15	14	13	12	11	10	9	8	7	6	5	4	3	2	1	0
bpm_pattern_0																															
R/W-0h																															

Table 7-118. BPM_PATTERN_0 Register Field Descriptions

Bit	Field	Type	Reset	Description
31-0	bpm_pattern_0	R/W	0h	BPM pattern [31:0]: Specifies the BPM pattern to be used to multiply the input samples if BPM removal is enabled

Copyright © 2025 Texas Instruments Incorporated

7.4.13.1.14 BPM_PATTERN_1 Register (Offset = B4h) [Reset = 0h]

BPM_PATTERN_1 is shown in the figure and described in the table.

Return to the Summary Table.

Figure 7-152. BPM_PATTERN_1 Register

31	30	29	28	27	26	25	24	23	22	21	20	19	18	17	16	15	14	13	12	11	10	9	8	7	6	5	4	3	2	1	0
bpm_pattern_1																															
R/W-0h																															

Table 7-119. BPM_PATTERN_1 Register Field Descriptions

Bit	Field	Type	Reset	Description
31-0	bpm_pattern_1	R/W	0h	BPM pattern [63:32]: Specifies the BPM pattern to be used to multiply the input samples if BPM removal is enabled

Copyright © 2025 Texas Instruments Incorporated

7.4.13.1.15 BPM_PATTERN_2 Register (Offset = B8h) [Reset = 0h]

BPM_PATTERN_2 is shown in the figure and described in the table.

Return to the Summary Table.

Figure 7-153. BPM_PATTERN_2 Register

31	30	29	28	27	26	25	24	23	22	21	20	19	18	17	16	15	14	13	12	11	10	9	8	7	6	5	4	3	2	1	0
bpm_pattern_2																															
R/W-0h																															

Table 7-120. BPM_PATTERN_2 Register Field Descriptions

Bit	Field	Type	Reset	Description
31-0	bpm_pattern_2	R/W	0h	BPM pattern [95:64]: Specifies the BPM pattern to be used to multiply the input samples if BPM removal is enabled

Copyright © 2025 Texas Instruments Incorporated

7.4.13.1.16 BPM_PATTERN_3 Register (Offset = BCh) [Reset = 0h]

BPM_PATTERN_3 is shown in the figure and described in the table.

Return to the Summary Table.

Figure 7-154. BPM_PATTERN_3 Register

31	30	29	28	27	26	25	24	23	22	21	20	19	18	17	16	15	14	13	12	11	10	9	8	7	6	5	4	3	2	1	0
bpm_pattern_3																															
R/W-0h																															

Table 7-121. BPM_PATTERN_3 Register Field Descriptions

Bit	Field	Type	Reset	Description
31-0	bpm_pattern_3	R/W	0h	BPM pattern [127:96]: Specifies the BPM pattern to be used to multiply the input samples if BPM removal is enabled

Copyright © 2025 Texas Instruments Incorporated

7.4.13.1.17 BPM_PATTERN_4 Register (Offset = C0h) [Reset = 0h]

BPM_PATTERN_4 is shown in the figure and described in the table.

Return to the Summary Table.

Figure 7-155. BPM_PATTERN_4 Register

31	30	29	28	27	26	25	24	23	22	21	20	19	18	17	16	15	14	13	12	11	10	9	8	7	6	5	4	3	2	1	0
bpm_pattern_4																															
R/W-0h																															

Table 7-122. BPM_PATTERN_4 Register Field Descriptions

Bit	Field	Type	Reset	Description
31-0	bpm_pattern_4	R/W	0h	BPM pattern [159:128]: Specifies the BPM pattern to be used to multiply the input samples if BPM removal is enabled

Copyright © 2025 Texas Instruments Incorporated

7.4.13.1.18 BPM_PATTERN_5 Register (Offset = C4h) [Reset = 0h]

BPM_PATTERN_5 is shown in the figure and described in the table.

Return to the Summary Table.

Figure 7-156. BPM_PATTERN_5 Register

31	30	29	28	27	26	25	24	23	22	21	20	19	18	17	16	15	14	13	12	11	10	9	8	7	6	5	4	3	2	1	0
bpm_pattern_5																															
R/W-0h																															

Table 7-123. BPM_PATTERN_5 Register Field Descriptions

Bit	Field	Type	Reset	Description
31-0	bpm_pattern_5	R/W	0h	BPM pattern [191:160]: Specifies the BPM pattern to be used to multiply the input samples if BPM removal is enabled

Copyright © 2025 Texas Instruments Incorporated

7.4.13.1.19 BPM_PATTERN_6 Register (Offset = C8h) [Reset = 0h]

BPM_PATTERN_6 is shown in the figure and described in the table.

Return to the Summary Table.

Figure 7-157. BPM_PATTERN_6 Register

31	30	29	28	27	26	25	24	23	22	21	20	19	18	17	16	15	14	13	12	11	10	9	8	7	6	5	4	3	2	1	0
bpm_pattern_6																															
R/W-0h																															

Table 7-124. BPM_PATTERN_6 Register Field Descriptions

Bit	Field	Type	Reset	Description
31-0	bpm_pattern_6	R/W	0h	BPM pattern [223:192]: Specifies the BPM pattern to be used to multiply the input samples if BPM removal is enabled

Copyright © 2025 Texas Instruments Incorporated

7.4.13.1.20 BPM_PATTERN_7 Register (Offset = CCh) [Reset = 0h]

BPM_PATTERN_7 is shown in the figure and described in the table.

Return to the Summary Table.

Figure 7-158. BPM_PATTERN_7 Register

31	30	29	28	27	26	25	24	23	22	21	20	19	18	17	16	15	14	13	12	11	10	9	8	7	6	5	4	3	2	1	0
bpm_pattern_7																															
R/W-0h																															

Table 7-125. BPM_PATTERN_7 Register Field Descriptions

Bit	Field	Type	Reset	Description
31-0	bpm_pattern_7	R/W	0h	BPM pattern[255:224]: Specifies the BPM pattern to be used to multiply the input samples if BPM removal is enabled

Copyright © 2025 Texas Instruments Incorporated

7.4.13.1.21 BPM_RATE Register (Offset = D0h) [Reset = X]

BPM_RATE is shown in the figure and described in the table.

Return to the Summary Table.

Figure 7-159. BPM_RATE Register

31	30	29	28	27	26	25	24	23	22	21	20	19	18	17	16	15	14	13	12	11	10	9	8	7	6	5	4	3	2	1	0
RESERVED																						bpm_rate									
R/W-X																						R/W-0h									

Table 7-126. BPM_RATE Register Field Descriptions

Bit	Field	Type	Reset	Description
31-10	RESERVED	R/W	X	
9-0	bpm_rate	R/W	0h	BPM rate: Specifies the number of input samples corresponding to each BPM bit. Minimum valid value for this register is 1.

Copyright © 2025 Texas Instruments Incorporated

7.4.13.1.22 PARAM_DONE_SET_STATUS_0 Register (Offset = D4h) [Reset = 0h]

PARAM_DONE_SET_STATUS_0 is shown in the figure and described in the table.

Return to the Summary Table.

Figure 7-160. PARAM_DONE_SET_STATUS_0 Register

31	30	29	28	27	26	25	24	23	22	21	20	19	18	17	16	15	14	13	12	11	10	9	8	7	6	5	4	3	2	1	0
param_done_set_status_0																															
R-0h																															

Table 7-127. PARAM_DONE_SET_STATUS_0 Register Field Descriptions

Bit	Field	Type	Reset	Description
31-0	param_done_set_status_0	R	0h	Parameter-set done status[31:0]: This read-only status register can be used by the main processor to see which parameter-sets are complete that led to the interrupt to the main processor. The individual bits in this 64-bit status register indicate which of the 64 parameter-sets have completed.

Copyright © 2025 Texas Instruments Incorporated

7.4.13.1.23 PARAM_DONE_SET_STATUS_1 Register (Offset = D8h) [Reset = 0h]

PARAM_DONE_SET_STATUS_1 is shown in the figure and described in the table.

Return to the Summary Table.

Figure 7-161. PARAM_DONE_SET_STATUS_1 Register

31	30	29	28	27	26	25	24	23	22	21	20	19	18	17	16	15	14	13	12	11	10	9	8	7	6	5	4	3	2	1	0
param_done_set_status_1																															
R-0h																															

Table 7-128. PARAM_DONE_SET_STATUS_1 Register Field Descriptions

Bit	Field	Type	Reset	Description
31-0	param_done_set_status_1	R	0h	Parameter-set done status[63:32]: This read-only status register can be used by the main processor to see which parameter-sets are complete that led to the interrupt to the main processor. The individual bits in this 64-bit status register indicate which of the 64 parameter-sets have completed.

Copyright © 2025 Texas Instruments Incorporated

7.4.13.1.24 PARAM_DONE_CLR_0 Register (Offset = DCh) [Reset = 0h]

PARAM_DONE_CLR_0 is shown in the figure and described in the table.

Return to the Summary Table.

Figure 7-162. PARAM_DONE_CLR_0 Register

31	30	29	28	27	26	25	24	23	22	21	20	19	18	17	16	15	14	13	12	11	10	9	8	7	6	5	4	3	2	1	0
param_done_status_clr_0																															
R/W-0h																															

Table 7-129. PARAM_DONE_CLR_0 Register Field Descriptions

Bit	Field	Type	Reset	Description
31-0	param_done_status_clr_0	R/W	0h	Status bits in PARAM_DONE_SET_STATUS are not automatically cleared, but they can be individually cleared by writing to 64-bit register PARAM_DONE_CLR. It s a Self clearing bit

Copyright © 2025 Texas Instruments Incorporated

7.4.13.1.25 PARAM_DONE_CLR_1 Register (Offset = E0h) [Reset = 0h]

PARAM_DONE_CLR_1 is shown in the figure and described in the table.

Return to the Summary Table.

Figure 7-163. PARAM_DONE_CLR_1 Register

31	30	29	28	27	26	25	24	23	22	21	20	19	18	17	16	15	14	13	12	11	10	9	8	7	6	5	4	3	2	1	0
param_done_status_clr_1																															
R/W-0h																															

Table 7-130. PARAM_DONE_CLR_1 Register Field Descriptions

Bit	Field	Type	Reset	Description
31-0	param_done_status_clr_1	R/W	0h	Status bits in PARAM_DONE_SET_STATUS are not automatically cleared, but they can be individually cleared by writing to 64-bit register PARAM_DONE_CLR. It s a Self clearing bit

Copyright © 2025 Texas Instruments Incorporated

7.4.13.1.26 TRIGGER_SET_STATUS_0 Register (Offset = E4h) [Reset = 0h]

TRIGGER_SET_STATUS_0 is shown in the figure and described in the table.

Return to the Summary Table.

Figure 7-164. TRIGGER_SET_STATUS_0 Register

31	30	29	28	27	26	25	24	23	22	21	20	19	18	17	16	15	14	13	12	11	10	9	8	7	6	5	4	3	2	1	0
trigger_set_status_0																															
R-0h																															

Table 7-131. TRIGGER_SET_STATUS_0 Register Field Descriptions

Bit	Field	Type	Reset	Description
31-0	trigger_set_status_0	R	0h	Debug register for trigger status[31:0]: This is a read-only status register, which indicates the trigger status of the accelerator, i.e., whether a specific DMA trigger or a CSI or a SW trigger was ever received (refer TRIGMODE in HW_ACC_PARAM register set). The mapping for 32 bits is as given below: {DMA2HWA_TRIGGER[31:0]}

Copyright © 2025 Texas Instruments Incorporated

7.4.13.1.27 TRIGGER_SET_STATUS_1 Register (Offset = E8h) [Reset = 0h]

TRIGGER_SET_STATUS_1 is shown in the figure and described in the table.

Return to the Summary Table.

Figure 7-165. TRIGGER_SET_STATUS_1 Register

31	30	29	28	27	26	25	24	23	22	21	20	19	18	17	16	15	14	13	12	11	10	9	8	7	6	5	4	3	2	1	0
trigger_set_status_1																															
R-0h																															

Table 7-132. TRIGGER_SET_STATUS_1 Register Field Descriptions

Bit	Field	Type	Reset	Description
31-0	trigger_set_status_1	R	0h	Debug register for trigger status[63:32]: This is a read-only status register, which indicates the trigger status of the accelerator, i.e., whether a specific DMA trigger or a CSI or a SW trigger was ever received (refer TRIGMODE in HW_ACC_PARAM register set). The mapping for 32 bits is as given below: {4'b0,CSI2A_FRAME_START[1:0],CSI2A_LINE_END[7:0],CSI2B_FRAME_START[1:0],CSI2B_LINE_END[7:0],FW2HWA_TRIGGER_CS,FW2HWA_TRIGGER_1,3'b0,FW2HWA_TRIGGER_0,1'b1}

Copyright © 2025 Texas Instruments Incorporated

7.4.13.1.28 TRIGGER_SET_IN_CLR_0 Register (Offset = ECh) [Reset = X]

TRIGGER_SET_IN_CLR_0 is shown in the figure and described in the table.

Return to the Summary Table.

Figure 7-166. TRIGGER_SET_IN_CLR_0 Register

31	30	29	28	27	26	25	24
RESERVED							
R/W-X							
23	22	21	20	19	18	17	16
RESERVED							
R/W-X							
15	14	13	12	11	10	9	8
RESERVED							
R/W-X							
7	6	5	4	3	2	1	0
RESERVED							trigger_set_in_clr_0
R/W-X							R/W-0h

Table 7-133. TRIGGER_SET_IN_CLR_0 Register Field Descriptions

Bit	Field	Type	Reset	Description
31-1	RESERVED	R/W	X	
0	trigger_set_in_clr_0	R/W	0h	Clear trigger_set_status : This register-bit when set clears the trigger status register TRIGGER_SET_STATUS_0 described above It s a Self clearing bit

Copyright © 2025 Texas Instruments Incorporated

7.4.13.1.29 TRIGGER_SET_IN_CLR_1 Register (Offset = F0h) [Reset = X]

TRIGGER_SET_IN_CLR_1 is shown in the figure and described in the table.

Return to the Summary Table.

Figure 7-167. TRIGGER_SET_IN_CLR_1 Register

31	30	29	28	27	26	25	24
RESERVED							
R/W-X							
23	22	21	20	19	18	17	16
RESERVED							
R/W-X							
15	14	13	12	11	10	9	8
RESERVED							
R/W-X							
7	6	5	4	3	2	1	0
RESERVED							trigger_set_in_clr_1
R/W-X							R/W-0h

Table 7-134. TRIGGER_SET_IN_CLR_1 Register Field Descriptions

Bit	Field	Type	Reset	Description
31-1	RESERVED	R/W	X	
0	trigger_set_in_clr_1	R/W	0h	Clear trigger_set_status : This register-bit when set clears the trigger status register TRIGGER_SET_STATUS_1 described above It s a Self clearing bit

Copyright © 2025 Texas Instruments Incorporated

7.4.13.1.30 DC_EST_RESET_SW Register (Offset = F4h) [Reset = X]

DC_EST_RESET_SW is shown in the figure and described in the table.

Return to the Summary Table.

Figure 7-168. DC_EST_RESET_SW Register

31	30	29	28	27	26	25	24
RESERVED							
R/W-X							
23	22	21	20	19	18	17	16
RESERVED							
R/W-X							
15	14	13	12	11	10	9	8
RESERVED							
R/W-X							
7	6	5	4	3	2	1	0
RESERVED							dc_est_reset_sw
R/W-X							R/W-0h

Table 7-135. DC_EST_RESET_SW Register Field Descriptions

Bit	Field	Type	Reset	Description
31-1	RESERVED	R/W	X	
0	dc_est_reset_sw	R/W	0h	Reset for all 12 DC estimation accumulators It s a Self clearing bit

Copyright © 2025 Texas Instruments Incorporated

7.4.13.1.31 DC_EST_CTRL Register (Offset = F8h) [Reset = X]

DC_EST_CTRL is shown in the figure and described in the table.

Return to the Summary Table.

Figure 7-169. DC_EST_CTRL Register

31	30	29	28	27	26	25	24	23	22	21	20	19	18	17	16
RESERVED												dc_est_shift			
R/W-X												R/W-0h			
15	14	13	12	11	10	9	8	7	6	5	4	3	2	1	0
RESERVED							dc_est_scale								
R/W-X							R/W-100h								

Table 7-136. DC_EST_CTRL Register Field Descriptions

Bit	Field	Type	Reset	Description
31-20	RESERVED	R/W	X	
19-16	dc_est_shift	R/W	0h	Programmable shift applied to all 12 accumulator outputs. Cannot be bypassed. Output shifted by $2^{8 + 6+DCEST_SHIFT}$. For DCEST_SHIFT = 15 also gives 2^{28} and not 29 (saturate at 28)
15-9	RESERVED	R/W	X	
8-0	dc_est_scale	R/W	100h	9-bit scale applied to all 12 accumulators. Multiplies the accumulator output by DCEST_SCALE/256.This is followed by right shift and truncation. Default value is 256 giving a scale of 1.0. Setting it to 128, gives a scale of 0.5

Copyright © 2025 Texas Instruments Incorporated

7.4.13.1.32 DC_EST_I_n_VAL Register (Offset = FCh + 4h*n) [Reset = X]

DC_EST_I_**n**_VAL where **n** goes from 0-11 is shown in the figure and described in the table.

Return to the Summary Table.

Figure 7-170. DC_EST_I_N_VAL Register

31	30	29	28	27	26	25	24	23	22	21	20	19	18	17	16	15	14	13	12	11	10	9	8	7	6	5	4	3	2	1	0
RESERVED								dc_est_i_**n**_val																							
R-X								R-0h																							

Table 7-137. DC_EST_I_N_VAL Register Field Descriptions

Bit	Field	Type	Reset	Description
31-24	RESERVED	R	X	
23-0	dc_est_i_**n**_val	R	0h	This read only register provide the DC estimates I for bcnt= **n**

Copyright © 2025 Texas Instruments Incorporated

7.4.13.1.33 DC_EST_Q_n_VAL Register (Offset = 12Ch + 4h*n) [Reset = X]

DC_EST_Q_**n**_VAL where **n** goes from 0-11 is shown in the figure and described in the table.

Return to the Summary Table.

Figure 7-171. DC_EST_Q_n_VAL Register

31	30	29	28	27	26	25	24	23	22	21	20	19	18	17	16	15	14	13	12	11	10	9	8	7	6	5	4	3	2	1	0
RESERVED								dc_est_q_**n**_val																							
R-X								R-0h																							

Table 7-138. DC_EST_Q_N_VAL Register Field Descriptions

Bit	Field	Type	Reset	Description
31-24	RESERVED	R	X	
23-0	dc_est_q_**n**_val	R	0h	This read only register provide the DC estimates Q for bcnt= **n**

Copyright © 2025 Texas Instruments Incorporated

7.4.13.1.34 DC_ACC_I_n_VAL_LSB Register (Offset = 15Ch + 8h*n) [Reset = 0h]

DC_ACC_I_**n**_VAL_LSB where **n** goes from 0-11 is shown in the figure and described in the table.

Return to the Summary Table.

Figure 7-172. DC_ACC_I_n_VAL_LSB Register

31	30	29	28	27	26	25	24	23	22	21	20	19	18	17	16	15	14	13	12	11	10	9	8	7	6	5	4	3	2	1	0
dc_acc_i_**n**_val_lsb																															
R-0h																															

Table 7-139. DC_ACC_I_n_VAL_LSB Register Field Descriptions

Bit	Field	Type	Reset	Description
31-0	dc_acc_i_**n**_val_lsb	R	0h	This read only register provide the LSB 32 bits value of DC accumulator I channel value for bcnt=**n**

Copyright © 2025 Texas Instruments Incorporated

7.4.13.1.35 DC_ACC_I_n_VAL_MSB Register (Offset = 160h + 8h*n) [Reset = X]

DC_ACC_I_**n**_VAL_MSB where **n** goes from 0-11 is shown in the figure and described in the table.

Return to the Summary Table.

Figure 7-173. DC_ACC_I_n_VAL_MSB Register

31	30	29	28	27	26	25	24
RESERVED							
R-X							
23	22	21	20	19	18	17	16
RESERVED							
R-X							
15	14	13	12	11	10	9	8
RESERVED							
R-X							
7	6	5	4	3	2	1	0
RESERVED				dc_acc_i_**n**_val_msb			
R-X				R-0h			

Table 7-140. DC_ACC_I_n_VAL_MSB Register Field Descriptions

Bit	Field	Type	Reset	Description
31-4	RESERVED	R	X	
3-0	dc_acc_i_**n**_val_msb	R	0h	This read only register provide the MSB 4 bits value of DC accumulator I channel value for bcnt=**n**

Copyright © 2025 Texas Instruments Incorporated

7.4.13.1.36 DC_ACC_Q_n_VAL_LSB Register (Offset = 1BCh + 8h*n) [Reset = 0h]

DC_ACC_Q_**n**_VAL_LSB where **n** goes from 0-11 is shown in the figure and described in the table.

Return to the Summary Table.

Figure 7-174. DC_ACC_Q_n_VAL_LSB Register

31	30	29	28	27	26	25	24	23	22	21	20	19	18	17	16	15	14	13	12	11	10	9	8	7	6	5	4	3	2	1	0
dc_acc_q_**n**_val_lsb																															
R-0h																															

Table 7-141. DC_ACC_Q_n_VAL_LSB Register Field Descriptions

Bit	Field	Type	Reset	Description
31-0	dc_acc_q_**n**_val_lsb	R	0h	This read only register provide the LSB 32 bits value of DC accumulator Q channel value for bcnt=**n**

Copyright © 2025 Texas Instruments Incorporated

7.4.13.1.37 DC_ACC_Q_n_VAL_MSB Register (Offset = 1C0h + 8h*n) [Reset = X]

DC_ACC_Q_**n**_VAL_MSB iwhere **n** goes from 0-11 is shown in the figure and described in the table.

Return to the Summary Table.

Figure 7-175. DC_ACC_Q_n_VAL_MSB Register

31	30	29	28	27	26	25	24
RESERVED							
R-X							
23	22	21	20	19	18	17	16
RESERVED							
R-X							
15	14	13	12	11	10	9	8
RESERVED							
R-X							
7	6	5	4	3	2	1	0
RESERVED				dc_acc_q_**n**_val_msb			
R-X				R-0h			

Table 7-142. DC_ACC_Q_n_VAL_MSB Register Field Descriptions

Bit	Field	Type	Reset	Description
31-4	RESERVED	R	X	
3-0	dc_acc_q_**n**_val_msb	R	0h	This read only register provide the MSB 4 bits value of DC accumulator Q channel value for bcnt=**n**

Copyright © 2025 Texas Instruments Incorporated

7.4.13.1.38 DC_ACC_CLIP_STATUS Register (Offset = 21Ch) [Reset = X]

DC_ACC_CLIP_STATUS is shown in the figure and described in the table.

Return to the Summary Table.

Figure 7-176. DC_ACC_CLIP_STATUS Register

31	30	29	28	27	26	25	24	23	22	21	20	19	18	17	16
RESERVED															
R-X															
15	14	13	12	11	10	9	8	7	6	5	4	3	2	1	0
RESERVED				dc_acc_clip_status											
R-X				R-0h											

Table 7-143. DC_ACC_CLIP_STATUS Register Field Descriptions

Bit	Field	Type	Reset	Description
31-12	RESERVED	R	X	
11-0	dc_acc_clip_status	R	0h	This register contains the clip status of both I/Q of DC accumulators 0 to 11

Copyright © 2025 Texas Instruments Incorporated

7.4.13.1.39 DC_EST_CLIP_STATUS Register (Offset = 220h) [Reset = X]

DC_EST_CLIP_STATUS is shown in the figure and described in the table.

Return to the Summary Table.

Figure 7-177. DC_EST_CLIP_STATUS Register

31	30	29	28	27	26	25	24	23	22	21	20	19	18	17	16
RESERVED															
R-X															
15	14	13	12	11	10	9	8	7	6	5	4	3	2	1	0
RESERVED				dc_est_clip_status											
R-X				R-0h											

Table 7-144. DC_EST_CLIP_STATUS Register Field Descriptions

Bit	Field	Type	Reset	Description
31-12	RESERVED	R	X	
11-0	dc_est_clip_status	R	0h	This register contains the clip status of DC estimates (both I & Q combined)

Copyright © 2025 Texas Instruments Incorporated

7.4.13.1.40 DC_In_SW Register (Offset = 224h + 4h*n) [Reset = X]

DC_**In**_SW where **n** goes from 0-11 is shown in the figure and described in the table.

Return to the Summary Table.

Figure 7-178. DC_In_SW Register

31	30	29	28	27	26	25	24	23	22	21	20	19	18	17	16	15	14	13	12	11	10	9	8	7	6	5	4	3	2	1	0
RESERVED								dc_i**n**_sw																							
R/W-X								R/W-0h																							

Table 7-145. DC_IN_SW Register Field Descriptions

Bit	Field	Type	Reset	Description
31-24	RESERVED	R/W	X	
23-0	dc_i**n**_sw	R/W	0h	SW programmed DC I value(for bcnt =**n**) used in DC subtraction

Copyright © 2025 Texas Instruments Incorporated

7.4.13.1.41 DC_Qn_SW Register (Offset = 254h + 4h*n) [Reset = X]

DC_Q**n**_SW where **n** goes from 0-11 is shown in the figure and described in the table.

Return to the Summary Table.

Figure 7-179. DC_Qn_SW Register

31	30	29	28	27	26	25	24	23	22	21	20	19	18	17	16	15	14	13	12	11	10	9	8	7	6	5	4	3	2	1	0
RESERVED								dc_q**n**_sw																							
R/W-X								R/W-0h																							

Table 7-146. DC_Qn_SW Register Field Descriptions

Bit	Field	Type	Reset	Description
31-24	RESERVED	R/W	X	
23-0	dc_q**n**_sw	R/W	0h	SW programmed DC Q value(for bcnt =**n**) used in DC subtraction

Copyright © 2025 Texas Instruments Incorporated

7.4.13.1.42 DC_SUB_CLIP Register (Offset = 284h) [Reset = X]

DC_SUB_CLIP is shown in the figure and described in the table.

Return to the Summary Table.

Figure 7-180. DC_SUB_CLIP Register

31	30	29	28	27	26	25	24
RESERVED							
R-X							
23	22	21	20	19	18	17	16
RESERVED							
R-X							
15	14	13	12	11	10	9	8
RESERVED							
R-X							
7	6	5	4	3	2	1	0
RESERVED							DC_SUB_CLIP
R-X							R-0h

Table 7-147. DC_SUB_CLIP Register Field Descriptions

Bit	Field	Type	Reset	Description
31-1	RESERVED	R	X	
0	DC_SUB_CLIP	R	0h	Indicates the DC subtraction clip status

Copyright © 2025 Texas Instruments Incorporated

7.4.13.1.43 DC_RESERVED_2 Register (Offset = 288h) [Reset = 0h]

DC_RESERVED_2 is shown in the figure and described in the table.

Return to the Summary Table.

Figure 7-181. DC_RESERVED_2 Register

31	30	29	28	27	26	25	24	23	22	21	20	19	18	17	16	15	14	13	12	11	10	9	8	7	6	5	4	3	2	1	0
RESERVED																															
R/W-0h																															

Table 7-148. DC_RESERVED_2 Register Field Descriptions

Bit	Field	Type	Reset	Description
31-0	RESERVED	R/W	0h	Reserved for future addition

Copyright © 2025 Texas Instruments Incorporated

7.4.13.1.44 DC_RESERVED_3 Register (Offset = 28Ch) [Reset = 0h]

DC_RESERVED_3 is shown in the figure and described in the table.

Return to the Summary Table.

Figure 7-182. DC_RESERVED_3 Register

31	30	29	28	27	26	25	24	23	22	21	20	19	18	17	16	15	14	13	12	11	10	9	8	7	6	5	4	3	2	1	0
RESERVED																															
R/W-0h																															

Table 7-149. DC_RESERVED_3 Register Field Descriptions

Bit	Field	Type	Reset	Description
31-0	RESERVED	R/W	0h	Reserved for future addition

Copyright © 2025 Texas Instruments Incorporated

7.4.13.1.45 DC_RESERVED_4 Register (Offset = 290h) [Reset = 0h]

DC_RESERVED_4 is shown in the figure and described in the table.

Return to the Summary Table.

Figure 7-183. DC_RESERVED_4 Register

31	30	29	28	27	26	25	24	23	22	21	20	19	18	17	16	15	14	13	12	11	10	9	8	7	6	5	4	3	2	1	0
RESERVED																															
R/W-0h																															

Table 7-150. DC_RESERVED_4 Register Field Descriptions

Bit	Field	Type	Reset	Description
31-0	RESERVED	R/W	0h	Reserved for future addition

Copyright © 2025 Texas Instruments Incorporated

7.4.13.1.46 DC_RESERVED_5 Register (Offset = 294h) [Reset = 0h]

DC_RESERVED_5 is shown in the figure and described in the table.

Return to the Summary Table.

Figure 7-184. DC_RESERVED_5 Register

31	30	29	28	27	26	25	24	23	22	21	20	19	18	17	16	15	14	13	12	11	10	9	8	7	6	5	4	3	2	1	0
RESERVED																															
R/W-0h																															

Table 7-151. DC_RESERVED_5 Register Field Descriptions

Bit	Field	Type	Reset	Description
31-0	RESERVED	R/W	0h	Reserved for future addition

Copyright © 2025 Texas Instruments Incorporated

7.4.13.1.47 INTF_STATS_RESET_SW Register (Offset = 298h) [Reset = X]

INTF_STATS_RESET_SW is shown in the figure and described in the table.

Return to the Summary Table.

Figure 7-185. INTF_STATS_RESET_SW Register

31	30	29	28	27	26	25	24
RESERVED							
R/W-X							
23	22	21	20	19	18	17	16
RESERVED							
R/W-X							
15	14	13	12	11	10	9	8
RESERVED							
R/W-X							
7	6	5	4	3	2	1	0
RESERVED							intf_stats_reset_sw
R/W-X							R/W-0h

Table 7-152. INTF_STATS_RESET_SW Register Field Descriptions

Bit	Field	Type	Reset	Description
31-1	RESERVED	R/W	X	
0	intf_stats_reset_sw	R/W	0h	SW reset for Interference stats module. It s a self clearing bit.

Copyright © 2025 Texas Instruments Incorporated

7.4.13.1.48 INTF_STATS_CTRL Register (Offset = 29Ch) [Reset = X]

INTF_STATS_CTRL is shown in the figure and described in the table.

Return to the Summary Table.

Figure 7-186. INTF_STATS_CTRL Register

31	30	29	28	27	26	25	24
intf_stats_magdiff_scale							
R/W-8h							
23	22	21	20	19	18	17	16
intf_stats_mag_scale							
R/W-8h							
15	14	13	12	11	10	9	8
RESERVED							
R/W-X							
7	6	5	4	3	2	1	0
RESERVED	intf_stats_magdiff_shift			RESERVED	intf_stats_mag_shift		
R/W-X	R/W-0h			R/W-X	R/W-0h		

Table 7-153. INTF_STATS_CTRL Register Field Descriptions

Bit	Field	Type	Reset	Description
31-24	intf_stats_magdiff_scale	R/W	8h	Unsigned scaler (5.3) applied to INTERFSUM_MAGDIFFn from interference statistics block. Default 8= scale of 1.0
23-16	intf_stats_mag_scale	R/W	8h	Unsigned scaler (5.3) applied to INTERFSUM_MAGn from interference statistics block. Default 8= scale of 1.0
15-7	RESERVED	R/W	X	
6-4	intf_stats_magdiff_shift	R/W	0h	Right shift applied after scaling - $2^{6+INTERFSUM_MAGDIFF_SHIFT}$. Can t be more than 2^{12}.
3	RESERVED	R/W	X	
2-0	intf_stats_mag_shift	R/W	0h	Right shift applied after scaling - $2^{6+INTERSUM_MAGS_SHIFT}$. Can t be more than 2^{12}.

Copyright © 2025 Texas Instruments Incorporated

7.4.13.1.49 INTF_LOC_THRESH_MAGn_VAL Register (Offset = 2A0h + 4h*n) [Reset = X]

INTF_LOC_THRESH_MAG**n**_VAL where **n** goes from 0-11 is shown in the figure and described in the table.

Return to the Summary Table.

Figure 7-187. INTF_LOC_THRESH_MAGn_VAL Register

31	30	29	28	27	26	25	24	23	22	21	20	19	18	17	16	15	14	13	12	11	10	9	8	7	6	5	4	3	2	1	0
RESERVED								intf_loc_thresh_mag**n**_val																									
R-X								R-0h																							

Table 7-154. INTF_LOC_THRESH_MAGn_VAL Register Field Descriptions

Bit	Field	Type	Reset	Description
31-24	RESERVED	R	X	
23-0	intf_loc_thresh_mag**n**_val	R	0h	Interference magnitude threshold value from Interference stats module (read only) for bcnt =**n**

Copyright © 2025 Texas Instruments Incorporated

7.4.13.1.50 INTF_LOC_THRESH_MAGDIFFn_VAL Register (Offset = 2D0h + 4h*n) [Reset = X]

INTF_LOC_THRESH_MAGDIFF**n**_VAL where **n** goes from 0-11 is shown in the figure and described in the table.

Return to the Summary Table.

Figure 7-188. INTF_LOC_THRESH_MAGDIFFN_VAL Register

31	30	29	28	27	26	25	24	23	22	21	20	19	18	17	16
RESERVED								intf_loc_thresh_magdiff**n**_val							
R-X								R-0h							
15	14	13	12	11	10	9	8	7	6	5	4	3	2	1	0
intf_loc_thresh_magdiff**n**_val															
R-0h															

Table 7-155. INTF_LOC_THRESH_MAGDIFFn_VAL Register Field Descriptions

Bit	Field	Type	Reset	Description
31-24	RESERVED	R	X	
23-0	intf_loc_thresh_magdiff**n**_val	R	0h	Interference magnitude difference threshold value from Interference stats module (read only) for bcnt =**n**

Copyright © 2025 Texas Instruments Incorporated

7.4.13.1.51 INTF_LOC_COUNT_ALL_CHIRP Register (Offset = 300h) [Reset = X]

INTF_LOC_COUNT_ALL_CHIRP is shown in the figure and described in the table.

Return to the Summary Table.

Figure 7-189. INTF_LOC_COUNT_ALL_CHIRP Register

31	30	29	28	27	26	25	24	23	22	21	20	19	18	17	16
RESERVED															
R-X															
15	14	13	12	11	10	9	8	7	6	5	4	3	2	1	0
RESERVED				intf_loc_count_all_chirp											
R-X				R-0h											

Table 7-156. INTF_LOC_COUNT_ALL_CHIRP Register Field Descriptions

Bit	Field	Type	Reset	Description
31-12	RESERVED	R	X	
11-0	intf_loc_count_all_chirp	R	0h	Number of samples that exceeded the threshold in a chirp

Copyright © 2025 Texas Instruments Incorporated

7.4.13.1.52 INTF_LOC_COUNT_ALL_FRAME Register (Offset = 304h) [Reset = X]

INTF_LOC_COUNT_ALL_FRAME is shown in the figure and described in the table.

Return to the Summary Table.

Figure 7-190. INTF_LOC_COUNT_ALL_FRAME Register

31	30	29	28	27	26	25	24	23	22	21	20	19	18	17	16
RESERVED												intf_loc_count_all_frame			
R-X												R-0h			
15	14	13	12	11	10	9	8	7	6	5	4	3	2	1	0
intf_loc_count_all_frame															
R-0h															

Table 7-157. INTF_LOC_COUNT_ALL_FRAME Register Field Descriptions

Bit	Field	Type	Reset	Description
31-20	RESERVED	R	X	
19-0	intf_loc_count_all_frame	R	0h	Number of samples that exceeded the threshold in a frame

Copyright © 2025 Texas Instruments Incorporated

7.4.13.1.53 INTF_STATS_MAG_ACC_n_LSB Register (Offset = 308h + 8h*n) [Reset = 0h]

INTF_STATS_MAG_ACC_**n**_LSB where **n** goes from 0-11 is shown in the figure and described in the table.

Return to the Summary Table.

Figure 7-191. INTF_STATS_MAG_ACC_n_LSB Register

31	30	29	28	27	26	25	24	23	22	21	20	19	18	17	16	15	14	13	12	11	10	9	8	7	6	5	4	3	2	1	0
intf_stats_mag_acc_**n**_lsb																															
R-0h																															

Table 7-158. INTF_STATS_MAG_ACC_n_LSB Register Field Descriptions

Bit	Field	Type	Reset	Description
31-0	intf_stats_mag_acc_**n**_lsb	R	0h	This read only register contains the accumulator value of interference magnitude(LSB 32 bits) for bcnt = **n**

Copyright © 2025 Texas Instruments Incorporated

7.4.13.1.54 INTF_STATS_MAG_ACC_n_MSB Register (Offset = 30Ch + 8h*n) [Reset = X]

INTF_STATS_MAG_ACC_**n**_MSB where **n** goes from 0-11 is shown in the figure and described in the table.

Return to the Summary Table.

Figure 7-192. INTF_STATS_MAG_ACC_n_MSB Register

31	30	29	28	27	26	25	24
RESERVED							
R-X							
23	22	21	20	19	18	17	16
RESERVED							
R-X							
15	14	13	12	11	10	9	8
RESERVED							
R-X							
7	6	5	4	3	2	1	0
RESERVED				intf_stats_mag_acc_**n**_msb			
R-X				R-0h			

Table 7-159. INTF_STATS_MAG_ACC_n_MSB Register Field Descriptions

Bit	Field	Type	Reset	Description
31-4	RESERVED	R	X	
3-0	intf_stats_mag_acc_**n**_msb	R	0h	This read only register contains the accumulator value of interference magnitude(MSB 4 bits) for bcnt = **n**

Copyright © 2025 Texas Instruments Incorporated

7.4.13.1.55 INTF_STATS_MAGDIFF_ACC_n_LSB Register (Offset = 368h + 8h*n) [Reset = 0h]

INTF_STATS_MAGDIFF_ACC_**n**_LSB where **n** goes from 0-11 is shown in the figure and described in the table.

Return to the Summary Table.

Figure 7-193. INTF_STATS_MAGDIFF_ACC_n_LSB Register

31	30	29	28	27	26	25	24	23	22	21	20	19	18	17	16	15	14	13	12	11	10	9	8	7	6	5	4	3	2	1	0
intf_stats_magdiff_acc_**n**_lsb																															
R-0h																															

Table 7-160. INTF_STATS_MAGDIFF_ACC_n_LSB Register Field Descriptions

Bit	Field	Type	Reset	Description
31-0	intf_stats_magdiff_acc_**n**_lsb	R	0h	This read only register contains the accumulator value of the interference magnitude difference (LSB 32 bits) for bcnt = **n**

Copyright © 2025 Texas Instruments Incorporated

7.4.13.1.56 INTF_STATS_MAGDIFF_ACC_n_MSB Register (Offset = 36Ch + 8h*n) [Reset = X]

INTF_STATS_MAGDIFF_ACC_**n**_MSB where **n** goes from 0-11 is shown in the figure and described in the table.

Return to the Summary Table.

Figure 7-194. INTF_STATS_MAGDIFF_ACC_n_MSB Register

31	30	29	28	27	26	25	24
RESERVED							
R-X							
23	22	21	20	19	18	17	16
RESERVED							
R-X							
15	14	13	12	11	10	9	8
RESERVED							
R-X							
7	6	5	4	3	2	1	0
RESERVED				intf_stats_magdiff_acc_**n**_msb			
R-X				R-0h			

Table 7-161. INTF_STATS_MAGDIFF_ACC_n_MSB Register Field Descriptions

Bit	Field	Type	Reset	Description
31-4	RESERVED	R	X	
3-0	intf_stats_magdiff_acc_**n**_msb	R	0h	This read only register contains the accumulator value of the interference magnitude difference (MSB 4 bits) for bcnt = **n**

Copyright © 2025 Texas Instruments Incorporated

7.4.13.1.57 I

Copyright © 2025 Texas Instruments Incorporated

7.4.13.1.58 INTF_LOC_THRESH_MAGn_SW Register (Offset = 3C8h + 4h*n) [Reset = X]

INTF_LOC_THRESH_MAG**n**_SW where **n** goes from 0-11 is shown in the figure and described in the table.

Return to the Summary Table.

Figure 7-195. INTF_LOC_THRESH_MAGn_SW Register

31	30	29	28	27	26	25	24	23	22	21	20	19	18	17	16	15	14	13	12	11	10	9	8	7	6	5	4	3	2	1	0
RESERVED								intf_loc_thresh_mag**n**_sw																									
R/W-X								R/W-0h																							

Table 7-162. INTF_LOC_THRESH_MAGn_SW Register Field Descriptions

Bit	Field	Type	Reset	Description
31-24	RESERVED	R/W	X	
23-0	intf_loc_thresh_mag**n**_sw	R/W	0h	SW programmed interface threshold magnitude for bcnt=**n**

Copyright © 2025 Texas Instruments Incorporated

7.4.13.1.59 INTF_LOC_THRESH_MAGDIFFn_SW Register (Offset = 3F8h + 4h*n) [Reset = X]

INTF_LOC_THRESH_MAGDIFF**n**_SW where **n** goes from 0-11 is shown in the figure and described in the table.

Return to the Summary Table.

Figure 7-196. INTF_LOC_THRESH_MAGDIFFn_SW Register

31	30	29	28	27	26	25	24	23	22	21	20	19	18	17	16
RESERVED								intf_loc_thresh_magdiff**n**_sw							
R/W-X								R/W-0h							
15	14	13	12	11	10	9	8	7	6	5	4	3	2	1	0
intf_loc_thresh_magdiff**n**_sw															
R/W-0h															

Table 7-163. INTF_LOC_THRESH_MAGDIFFn_SW Register Field Descriptions

Bit	Field	Type	Reset	Description
31-24	RESERVED	R/W	X	
23-0	intf_loc_thresh_magdiff**n**_sw	R/W	0h	SW programmed interface threshold magnitude difference for bcnt=**n**

Copyright © 2025 Texas Instruments Incorporated

7.4.13.1.60 INTF_STATS_ACC_CLIP_STATUS Register (Offset = 428h) [Reset = X]

INTF_STATS_ACC_CLIP_STATUS is shown in the figure and described in the table.

Return to the Summary Table.

Figure 7-197. INTF_STATS_ACC_CLIP_STATUS Register

31	30	29	28	27	26	25	24
RESERVED				intf_stats_magdiff_accumulator_clip_status			
R-X				R-0h			
23	22	21	20	19	18	17	16
intf_stats_magdiff_accumulator_clip_status							
R-0h							
15	14	13	12	11	10	9	8
RESERVED				intf_stats_mag_accumulator_clip_status			
R-X				R-0h			
7	6	5	4	3	2	1	0
intf_stats_mag_accumulator_clip_status							
R-0h							

Table 7-164. INTF_STATS_ACC_CLIP_STATUS Register Field Descriptions

Bit	Field	Type	Reset	Description
31-28	RESERVED	R	X	
27-16	intf_stats_magdiff_accumulator_clip_status	R	0h	Interference magnitue difference accumulator Clip status
15-12	RESERVED	R	X	
11-0	intf_stats_mag_accumulator_clip_status	R	0h	Interference magnitue accumulator Clip status

Copyright © 2025 Texas Instruments Incorporated

7.4.13.1.61 INTF_STATS_THRESH_CLIP_STATUS Register (Offset = 42Ch) [Reset = X]

INTF_STATS_THRESH_CLIP_STATUS is shown in the figure and described in the table.

Return to the Summary Table.

Figure 7-198. INTF_STATS_THRESH_CLIP_STATUS Register

31	30	29	28	27	26	25	24
RESERVED				intf_stats_thresh_magdiff_clip_status			
R-X				R-0h			
23	22	21	20	19	18	17	16
intf_stats_thresh_magdiff_clip_status							
R-0h							
15	14	13	12	11	10	9	8
RESERVED				intf_stats_thresh_mag_clip_status			
R-X				R-0h			
7	6	5	4	3	2	1	0
intf_stats_thresh_mag_clip_status							
R-0h							

Table 7-165. INTF_STATS_THRESH_CLIP_STATUS Register Field Descriptions

Bit	Field	Type	Reset	Description
31-28	RESERVED	R	X	
27-16	intf_stats_thresh_magdiff_clip_status	R	0h	Interference magnitude difference threshold Clip status
15-12	RESERVED	R	X	
11-0	intf_stats_thresh_mag_clip_status	R	0h	Interference magnitude threshold Clip status

Copyright © 2025 Texas Instruments Incorporated

7.4.13.1.62 INTF_MITG_WINDOW_PARAM_0 Register (Offset = 430h) [Reset = X]

INTF_MITG_WINDOW_PARAM_0 is shown in the figure and described in the table.

Return to the Summary Table.

Figure 7-199. INTF_MITG_WINDOW_PARAM_0 Register

31	30	29	28	27	26	25	24
RESERVED							
R/W-X							
23	22	21	20	19	18	17	16
RESERVED							
R/W-X							
15	14	13	12	11	10	9	8
RESERVED							
R/W-X							
7	6	5	4	3	2	1	0
RESERVED			intf_mitg_window_param_0				
R/W-X			R/W-0h				

Table 7-166. INTF_MITG_WINDOW_PARAM_0 Register Field Descriptions

Bit	Field	Type	Reset	Description
31-5	RESERVED	R/W	X	
4-0	intf_mitg_window_param_0	R/W	0h	This is a programmable array of window parameters. Each window parameter is an unsigned 5 bit integer. The total length of the array is 5. The BFR of the array is given by the matlab code : val = round(hanning(12)*32) INTF_MITG_WINDOW_PARAM = val(1:5);

Copyright © 2025 Texas Instruments Incorporated

7.4.13.1.63 INTF_MITG_WINDOW_PARAM_1 Register (Offset = 434h) [Reset = X]

INTF_MITG_WINDOW_PARAM_1 is shown in the figure and described in the table.

Return to the Summary Table.

Figure 7-200. INTF_MITG_WINDOW_PARAM_1 Register

31	30	29	28	27	26	25	24
RESERVED							
R/W-X							
23	22	21	20	19	18	17	16
RESERVED							
R/W-X							
15	14	13	12	11	10	9	8
RESERVED							
R/W-X							
7	6	5	4	3	2	1	0
RESERVED			intf_mitg_window_param_1				
R/W-X			R/W-0h				

Table 7-167. INTF_MITG_WINDOW_PARAM_1 Register Field Descriptions

Bit	Field	Type	Reset	Description
31-5	RESERVED	R/W	X	
4-0	intf_mitg_window_param_1	R/W	0h	Refer description of INTF_MITG_WINDOW_PARAM_0

Copyright © 2025 Texas Instruments Incorporated

7.4.13.1.64 INTF_MITG_WINDOW_PARAM_2 Register (Offset = 438h) [Reset = X]

INTF_MITG_WINDOW_PARAM_2 is shown in the figure and described in the table.

Return to the Summary Table.

Figure 7-201. INTF_MITG_WINDOW_PARAM_2 Register

31	30	29	28	27	26	25	24
RESERVED							
R/W-X							
23	22	21	20	19	18	17	16
RESERVED							
R/W-X							
15	14	13	12	11	10	9	8
RESERVED							
R/W-X							
7	6	5	4	3	2	1	0
RESERVED			intf_mitg_window_param_2				
R/W-X			R/W-0h				

Table 7-168. INTF_MITG_WINDOW_PARAM_2 Register Field Descriptions

Bit	Field	Type	Reset	Description
31-5	RESERVED	R/W	X	
4-0	intf_mitg_window_param_2	R/W	0h	Refer description of INTF_MITG_WINDOW_PARAM_0

Copyright © 2025 Texas Instruments Incorporated

7.4.13.1.65 INTF_MITG_WINDOW_PARAM_3 Register (Offset = 43Ch) [Reset = X]

INTF_MITG_WINDOW_PARAM_3 is shown in the figure and described in the table.

Return to the Summary Table.

Figure 7-202. INTF_MITG_WINDOW_PARAM_3 Register

31	30	29	28	27	26	25	24
RESERVED							
R/W-X							
23	22	21	20	19	18	17	16
RESERVED							
R/W-X							
15	14	13	12	11	10	9	8
RESERVED							
R/W-X							
7	6	5	4	3	2	1	0
RESERVED			intf_mitg_window_param_3				
R/W-X			R/W-0h				

Table 7-169. INTF_MITG_WINDOW_PARAM_3 Register Field Descriptions

Bit	Field	Type	Reset	Description
31-5	RESERVED	R/W	X	
4-0	intf_mitg_window_param_3	R/W	0h	Refer description of INTF_MITG_WINDOW_PARAM_0

Copyright © 2025 Texas Instruments Incorporated

7.4.13.1.66 INTF_MITG_WINDOW_PARAM_4 Register (Offset = 440h) [Reset = X]

INTF_MITG_WINDOW_PARAM_4 is shown in the figure and described in the table.

Return to the Summary Table.

Figure 7-203. INTF_MITG_WINDOW_PARAM_4 Register

31	30	29	28	27	26	25	24
RESERVED							
R/W-X							
23	22	21	20	19	18	17	16
RESERVED							
R/W-X							
15	14	13	12	11	10	9	8
RESERVED							
R/W-X							
7	6	5	4	3	2	1	0
RESERVED			intf_mitg_window_param_4				
R/W-X			R/W-0h				

Table 7-170. INTF_MITG_WINDOW_PARAM_4 Register Field Descriptions

Bit	Field	Type	Reset	Description
31-5	RESERVED	R/W	X	
4-0	intf_mitg_window_param_4	R/W	0h	Refer description of INTF_MITG_WINDOW_PARAM_0

Copyright © 2025 Texas Instruments Incorporated

7.4.13.1.67 INTF_STATS_SUM_MAG_VAL Register (Offset = 444h) [Reset = X]

INTF_STATS_SUM_MAG_VAL is shown in the figure and described in the table.

Return to the Summary Table.

Figure 7-204. INTF_STATS_SUM_MAG_VAL Register

31	30	29	28	27	26	25	24	23	22	21	20	19	18	17	16	15	14	13	12	11	10	9	8	7	6	5	4	3	2	1	0
RESERVED								intf_stats_sum_mag_val																							
R-X								R-0h																							

Table 7-171. INTF_STATS_SUM_MAG_VAL Register Field Descriptions

Bit	Field	Type	Reset	Description
31-24	RESERVED	R	X	
23-0	intf_stats_sum_mag_val	R	0h	Indicates the sum of mag values ; Only Configured BCNT mag values are added

Copyright © 2025 Texas Instruments Incorporated

7.4.13.1.68 INTF_STATS_SUM_MAG_VAL_CLIP_STATUS Register (Offset = 448h) [Reset = X]

INTF_STATS_SUM_MAG_VAL_CLIP_STATUS is shown in the figure and described in the table.

Return to the Summary Table.

Figure 7-205. INTF_STATS_SUM_MAG_VAL_CLIP_STATUS Register

31	30	29	28	27	26	25	24
RESERVED							
R-X							
23	22	21	20	19	18	17	16
RESERVED							
R-X							
15	14	13	12	11	10	9	8
RESERVED							
R-X							
7	6	5	4	3	2	1	0
RESERVED							intf_stats_sum_mag_val_clip_status
R-X							R-0h

Table 7-172. INTF_STATS_SUM_MAG_VAL_CLIP_STATUS Register Field Descriptions

Bit	Field	Type	Reset	Description
31-1	RESERVED	R	X	
0	intf_stats_sum_mag_val_clip_status	R	0h	Indicates the clip status of sum of mag values

Copyright © 2025 Texas Instruments Incorporated

7.4.13.1.69 INTF_STATS_SUM_MAGDIFF_VAL Register (Offset = 44Ch) [Reset = X]

INTF_STATS_SUM_MAGDIFF_VAL is shown in the figure and described in the table.

Return to the Summary Table.

Figure 7-206. INTF_STATS_SUM_MAGDIFF_VAL Register

31	30	29	28	27	26	25	24	23	22	21	20	19	18	17	16
RESERVED								intf_stats_sum_magdiff_val							
R-X								R-0h							
15	14	13	12	11	10	9	8	7	6	5	4	3	2	1	0
intf_stats_sum_magdiff_val															
R-0h															

Table 7-173. INTF_STATS_SUM_MAGDIFF_VAL Register Field Descriptions

Bit	Field	Type	Reset	Description
31-24	RESERVED	R	X	
23-0	intf_stats_sum_magdiff_val	R	0h	Indicates the sum of magdiff values ; Only Configured BCNT magdiff values are added

Copyright © 2025 Texas Instruments Incorporated

7.4.13.1.70 INTF_STATS_SUM_MAGDIFF_VAL_CLIP_STATUS Register (Offset = 450h) [Reset = X]

INTF_STATS_SUM_MAGDIFF_VAL_CLIP_STATUS is shown in the figure and described in the table.

Return to the Summary Table.

Figure 7-207. INTF_STATS_SUM_MAGDIFF_VAL_CLIP_STATUS Register

31	30	29	28	27	26	25	24
RESERVED							
R-X							
23	22	21	20	19	18	17	16
RESERVED							
R-X							
15	14	13	12	11	10	9	8
RESERVED							
R-X							
7	6	5	4	3	2	1	0
RESERVED							intf_stats_sum_magdiff_val_clip_status
R-X							R-0h

Table 7-174. INTF_STATS_SUM_MAGDIFF_VAL_CLIP_STATUS Register Field Descriptions

Bit	Field	Type	Reset	Description
31-1	RESERVED	R	X	
0	intf_stats_sum_magdiff_val_clip_status	R	0h	indicates the clip status of sum of magdiff values

Copyright © 2025 Texas Instruments Incorporated

7.4.13.1.71 INTERF_RESERVED_5 Register (Offset = 454h) [Reset = 0h]

INTERF_RESERVED_5 is shown in the figure and described in the table.

Return to the Summary Table.

Figure 7-208. INTERF_RESERVED_5 Register

31	30	29	28	27	26	25	24	23	22	21	20	19	18	17	16	15	14	13	12	11	10	9	8	7	6	5	4	3	2	1	0
RESERVED																															
R/W-0h																															

Table 7-175. INTERF_RESERVED_5 Register Field Descriptions

Bit	Field	Type	Reset	Description
31-0	RESERVED	R/W	0h	Reserved for future addition

Copyright © 2025 Texas Instruments Incorporated

7.4.13.1.72 ICMULT_SCALEn Register (Offset = 458h + 4h*n) [Reset = X]

ICMULT_SCALE**n** where **n** goes from 0-11 is shown in the figure and described in the table.

Return to the Summary Table.

Figure 7-209. ICMULT_SCALEn Register

31	30	29	28	27	26	25	24	23	22	21	20	19	18	17	16	15	14	13	12	11	10	9	8	7	6	5	4	3	2	1	0
RESERVED											icmult_scale**n**																				
R/W-X											R/W-0h																				

Table 7-176. ICMULT_SCALEn Register Field Descriptions

Bit	Field	Type	Reset	Description
31-21	RESERVED	R/W	X	
20-0	icmult_scale**n**	R/W	0h	Complex scalars used in CMULT_MODE = 0101, 0110 & 0111 In CMULT_MODE : 0101 , If set CMULT_SCALE_EN is 1, the input samples are multiplied by a different complex scalar ICMULTSCALE0, QMULTSCALE0 to ICMULTSCALE11, QMULTSCALE11 per-iteration based on REG_BCNT. Else, a constant complex scalar ICMULTSCALE0 and QCMULTSCALE0 is applied to all sample across all iterations. In CMULT_MODE : 0110 or 0111, if CMULT_SCALE_EN is 1, then input samples are multiplied successively by ICMULTSCALE0, QMULTSCALE0 to ICMULTSCALE11, QMULTSCALE11 per iteration. Complex scalar to be multiplier is ACNT modulo 12.

Copyright © 2025 Texas Instruments Incorporated

7.4.13.1.73 QCMULT_SCALEn Register (Offset = 488h + 4h*n) [Reset = X]

QCMULT_SCALE**n** where **n** goes from 0-11 is shown in the figure and described in the table.

Return to the Summary Table.

Figure 7-210. QCMULT_SCALEn Register

31	30	29	28	27	26	25	24	23	22	21	20	19	18	17	16	15	14	13	12	11	10	9	8	7	6	5	4	3	2	1	0
RESERVED											qcmult_scale**n**																				
R/W-X											R/W-0h																				

Table 7-177. QCMULT_SCALEn Register Field Descriptions

Bit	Field	Type	Reset	Description
31-21	RESERVED	R/W	X	
20-0	qcmult_scale**n**	R/W	0h	Complex scalars used in CMULT_MODE = 0101, 0110 & 0111 In CMULT_MODE : 0101 , If set CMULT_SCALE_EN is 1, the input samples are multiplied by a different complex scalar ICMULTSCALE0, QMULTSCALE0 to ICMULTSCALE11, QMULTSCALE11 per-iteration based on REG_BCNT. Else, a constant complex scalar ICMULTSCALE0 and QCMULTSCALE0 is applied to all sample across all iterations. In CMULT_MODE : 0110 or 0111, if CMULT_SCALE_EN is 1, then input samples are multiplied successively by ICMULTSCALE0, QMULTSCALE0 to ICMULTSCALE11, QMULTSCALE11 per iteration. Complex scalar to be multiplier is ACNT modulo 12.

Copyright © 2025 Texas Instruments Incorporated

7.4.13.1.74 TWID_INCR_DELTA_FRAC Register (Offset = 4B8h) [Reset = X]

TWID_INCR_DELTA_FRAC is shown in the figure and described in the table.

Return to the Summary Table.

Figure 7-211. TWID_INCR_DELTA_FRAC Register

31	30	29	28	27	26	25	24	23	22	21	20	19	18	17	16
RESERVED															
R/W-X															
15	14	13	12	11	10	9	8	7	6	5	4	3	2	1	0
RESERVED						twid_incr_delta_frac									
R/W-X						R/W-0h									

Table 7-178. TWID_INCR_DELTA_FRAC Register Field Descriptions

Bit	Field	Type	Reset	Description
31-10	RESERVED	R/W	X	
9-0	twid_incr_delta_frac	R/W	0h	Used in complex multiplier mode 10 Delta Fractional frequency increment per param-set looping Instantaneous frequency is (TWIDINCR << 10) +TWID_INCR_DELTA_ FRAC*c, c is current execution count of the parameter set.

Copyright © 2025 Texas Instruments Incorporated

7.4.13.1.75 RECWIN_RESET_SW Register (Offset = 4BCh) [Reset = X]

RECWIN_RESET_SW is shown in the figure and described in the table.

Return to the Summary Table.

Figure 7-212. RECWIN_RESET_SW Register

31	30	29	28	27	26	25	24
RESERVED							
R/W-X							
23	22	21	20	19	18	17	16
RESERVED							
R/W-X							
15	14	13	12	11	10	9	8
RESERVED							
R/W-X							
7	6	5	4	3	2	1	0
RESERVED							recwin_reset_sw
R/W-X							R/W-0h

Table 7-179. RECWIN_RESET_SW Register Field Descriptions

Bit	Field	Type	Reset	Description
31-1	RESERVED	R/W	X	
0	recwin_reset_sw	R/W	0h	This resets the param set counter / execution counter used in Complex multiplier mode 8 . It s a self clearing bit.

Copyright © 2025 Texas Instruments Incorporated

7.4.13.1.76 TWID_INCR_DELTA_FRAC_RESET_SW Register (Offset = 4C0h) [Reset = X]

TWID_INCR_DELTA_FRAC_RESET_SW is shown in the figure and described in the table.

Return to the Summary Table.

Figure 7-213. TWID_INCR_DELTA_FRAC_RESET_SW Register

31	30	29	28	27	26	25	24
RESERVED							
R/W-X							
23	22	21	20	19	18	17	16
RESERVED							
R/W-X							
15	14	13	12	11	10	9	8
RESERVED							
R/W-X							
7	6	5	4	3	2	1	0
RESERVED							twid_incr_delta_frac_reset_sw
R/W-X							R/W-0h

Table 7-180. TWID_INCR_DELTA_FRAC_RESET_SW Register Field Descriptions

Bit	Field	Type	Reset	Description
31-1	RESERVED	R/W	X	
0	twid_incr_delta_frac_reset_sw	R/W	0h	This resets the param set counter used in Complex multiplier mode 10 . It s a Self clearing bit

Copyright © 2025 Texas Instruments Incorporated

7.4.13.1.77 TWID_INCR_DELTA_FRAC_CLIP_STATUS Register (Offset = 4C4h) [Reset = X]

TWID_INCR_DELTA_FRAC_CLIP_STATUS is shown in the figure and described in the table.

Return to the Summary Table.

Figure 7-214. TWID_INCR_DELTA_FRAC_CLIP_STATUS Register

31	30	29	28	27	26	25	24
RESERVED							
R-X							
23	22	21	20	19	18	17	16
RESERVED							
R-X							
15	14	13	12	11	10	9	8
RESERVED							
R-X							
7	6	5	4	3	2	1	0
RESERVED							twid_incr_delta_frac_clip_status
R-X							R-0h

Table 7-181. TWID_INCR_DELTA_FRAC_CLIP_STATUS Register Field Descriptions

Bit	Field	Type	Reset	Description
31-1	RESERVED	R	X	
0	twid_incr_delta_frac_clip_status	R	0h	Indicates the clip status for TWID_INCR_DELTA_FRAC accumulator

Copyright © 2025 Texas Instruments Incorporated

7.4.13.1.78 RECWIN_INIT_KVAL Register (Offset = 4C8h) [Reset = X]

RECWIN_INIT_KVAL is shown in the figure and described in the table.

Return to the Summary Table.

Figure 7-215. RECWIN_INIT_KVAL Register

31	30	29	28	27	26	25	24	23	22	21	20	19	18	17	16
RESERVED															
R/W-X															
15	14	13	12	11	10	9	8	7	6	5	4	3	2	1	0
RESERVED				recwin_init_kval											
R/W-X				R/W-0h											

Table 7-182. RECWIN_INIT_KVAL Register Field Descriptions

Bit	Field	Type	Reset	Description
31-12	RESERVED	R/W	X	
11-0	recwin_init_kval	R/W	0h	Indicates the initialization value of execution counter in recursive window mode . Execution counter value is initialized when recwin_reset_sw is 1'b1

Copyright © 2025 Texas Instruments Incorporated

7.4.13.1.79 CMULT_RESERVED_2 Register (Offset = 4CCh) [Reset = 0h]

CMULT_RESERVED_2 is shown in the figure and described in the table.

Return to the Summary Table.

Figure 7-216. CMULT_RESERVED_2 Register

31	30	29	28	27	26	25	24	23	22	21	20	19	18	17	16	15	14	13	12	11	10	9	8	7	6	5	4	3	2	1	0
RESERVED																															
R/W-0h																															

Table 7-183. CMULT_RESERVED_2 Register Field Descriptions

Bit	Field	Type	Reset	Description
31-0	RESERVED	R/W	0h	Reserved for future addition

Copyright © 2025 Texas Instruments Incorporated

7.4.13.1.80 CHAN_COMB_SIZE Register (Offset = 4D0h) [Reset = X]

CHAN_COMB_SIZE is shown in the figure and described in the table.

Return to the Summary Table.

Figure 7-217. CHAN_COMB_SIZE Register

31	30	29	28	27	26	25	24	23	22	21	20	19	18	17	16
RESERVED															
R/W-X															
15	14	13	12	11	10	9	8	7	6	5	4	3	2	1	0
RESERVED								chan_comb_size							
R/W-X								R/W-0h							

Table 7-184. CHAN_COMB_SIZE Register Field Descriptions

Bit	Field	Type	Reset	Description
31-8	RESERVED	R/W	X	
7-0	chan_comb_size	R/W	0h	Number of samples after combination

Copyright © 2025 Texas Instruments Incorporated

7.4.13.1.81 CHAN_COMB_VEC_0 Register (Offset = 4D4h) [Reset = 0h]

CHAN_COMB_VEC_0 is shown in the figure and described in the table.

Return to the Summary Table.

Figure 7-218. CHAN_COMB_VEC_0 Register

31	30	29	28	27	26	25	24	23	22	21	20	19	18	17	16	15	14	13	12	11	10	9	8	7	6	5	4	3	2	1	0
chan_comb_vec_0																															
R/W-0h																															

Table 7-185. CHAN_COMB_VEC_0 Register Field Descriptions

Bit	Field	Type	Reset	Description
31-0	chan_comb_vec_0	R/W	0h	Channel combination MASK for 0 to 31 samples Vector indicating the samples indices that need to be combined. A 01 or 10 transition demarcates the groups. if CHAN_COMB_VEC = 0xF030000000000000 sums the first 4 samples and outputs one sample, sums 5th-9th samples and passes one sample, combines 10th-12th samples, outputs one sample and then streams the rest of the input

Copyright © 2025 Texas Instruments Incorporated

7.4.13.1.82 CHAN_COMB_VEC_1 Register (Offset = 4D8h) [Reset = 0h]

CHAN_COMB_VEC_1 is shown in the figure and described in the table.

Return to the Summary Table.

Figure 7-219. CHAN_COMB_VEC_1 Register

31	30	29	28	27	26	25	24	23	22	21	20	19	18	17	16	15	14	13	12	11	10	9	8	7	6	5	4	3	2	1	0
chan_comb_vec_1																															
R/W-0h																															

Table 7-186. CHAN_COMB_VEC_1 Register Field Descriptions

Bit	Field	Type	Reset	Description
31-0	chan_comb_vec_1	R/W	0h	Channel combination MASK for 32 to 63 samples Vector indicating the samples indices that need to be combined. A 01 or 10 transition demarcates the groups. if CHAN_COMB_VEC = 0xF030000000000000 sums the first 4 samples and outputs one sample, sums 5th-9th samples and passes one sample, combines 10th-12th samples, outputs one sample and then streams the rest of the input

Copyright © 2025 Texas Instruments Incorporated

7.4.13.1.83 CHAN_COMB_VEC_2 Register (Offset = 4DCh) [Reset = 0h]

CHAN_COMB_VEC_2 is shown in the figure and described in the table.

Return to the Summary Table.

Figure 7-220. CHAN_COMB_VEC_2 Register

31	30	29	28	27	26	25	24	23	22	21	20	19	18	17	16	15	14	13	12	11	10	9	8	7	6	5	4	3	2	1	0
chan_comb_vec_2																															
R/W-0h																															

Table 7-187. CHAN_COMB_VEC_2 Register Field Descriptions

Bit	Field	Type	Reset	Description
31-0	chan_comb_vec_2	R/W	0h	Channel combination MASK for 64 to 95 samples Vector indicating the samples indices that need to be combined. A 01 or 10 transition demarcates the groups. if CHAN_COMB_VEC = 0xF030000000000000 sums the first 4 samples and outputs one sample, sums 5th-9th samples and passes one sample, combines 10th-12th samples, outputs one sample and then streams the rest of the input

Copyright © 2025 Texas Instruments Incorporated

7.4.13.1.84 CHAN_COMB_VEC_3 Register (Offset = 4E0h) [Reset = 0h]

CHAN_COMB_VEC_3 is shown in the figure and described in the table.

Return to the Summary Table.

Figure 7-221. CHAN_COMB_VEC_3 Register

31	30	29	28	27	26	25	24	23	22	21	20	19	18	17	16	15	14	13	12	11	10	9	8	7	6	5	4	3	2	1	0
chan_comb_vec_3																															
R/W-0h																															

Table 7-188. CHAN_COMB_VEC_3 Register Field Descriptions

Bit	Field	Type	Reset	Description
31-0	chan_comb_vec_3	R/W	0h	Channel combination MASK for 96 to 127 samples Vector indicating the samples indices that need to be combined. A 01 or 10 transition demarcates the groups. if CHAN_COMB_VEC = 0xF030000000000000 sums the first 4 samples and outputs one sample, sums 5th-9th samples and passes one sample, combines 10th-12th samples, outputs one sample and then streams the rest of the input

Copyright © 2025 Texas Instruments Incorporated

7.4.13.1.85 CHAN_COMB_VEC_4 Register (Offset = 4E4h) [Reset = 0h]

CHAN_COMB_VEC_4 is shown in the figure and described in the table.

Return to the Summary Table.

Figure 7-222. CHAN_COMB_VEC_4 Register

31	30	29	28	27	26	25	24	23	22	21	20	19	18	17	16	15	14	13	12	11	10	9	8	7	6	5	4	3	2	1	0
chan_comb_vec_4																															
R/W-0h																															

Table 7-189. CHAN_COMB_VEC_4 Register Field Descriptions

Bit	Field	Type	Reset	Description
31-0	chan_comb_vec_4	R/W	0h	Channel combination MASK for 128 to 159 samples Vector indicating the samples indices that need to be combined. A 01 or 10 transition demarcates the groups. if CHAN_COMB_VEC = 0xF030000000000000 sums the first 4 samples and outputs one sample, sums 5th-9th samples and passes one sample, combines 10th-12th samples, outputs one sample and then streams the rest of the input

Copyright © 2025 Texas Instruments Incorporated

7.4.13.1.86 CHAN_COMB_VEC_5 Register (Offset = 4E8h) [Reset = 0h]

CHAN_COMB_VEC_5 is shown in the figure and described in the table.

Return to the Summary Table.

Figure 7-223. CHAN_COMB_VEC_5 Register

31	30	29	28	27	26	25	24	23	22	21	20	19	18	17	16	15	14	13	12	11	10	9	8	7	6	5	4	3	2	1	0
chan_comb_vec_5																															
R/W-0h																															

Table 7-190. CHAN_COMB_VEC_5 Register Field Descriptions

Bit	Field	Type	Reset	Description
31-0	chan_comb_vec_5	R/W	0h	Channel combination MASK for 160 to 191 samples Vector indicating the samples indices that need to be combined. A 01 or 10 transition demarcates the groups. if CHAN_COMB_VEC = 0xF030000000000000 sums the first 4 samples and outputs one sample, sums 5th-9th samples and passes one sample, combines 10th-12th samples, outputs one sample and then streams the rest of the input

Copyright © 2025 Texas Instruments Incorporated

7.4.13.1.87 CHAN_COMB_VEC_6 Register (Offset = 4ECh) [Reset = 0h]

CHAN_COMB_VEC_6 is shown in the figure and described in the table.

Return to the Summary Table.

Figure 7-224. CHAN_COMB_VEC_6 Register

31	30	29	28	27	26	25	24	23	22	21	20	19	18	17	16	15	14	13	12	11	10	9	8	7	6	5	4	3	2	1	0
chan_comb_vec_6																															
R/W-0h																															

Table 7-191. CHAN_COMB_VEC_6 Register Field Descriptions

Bit	Field	Type	Reset	Description
31-0	chan_comb_vec_6	R/W	0h	Channel combination MASK for 192 to 223 samples Vector indicating the samples indices that need to be combined. A 01 or 10 transition demarcates the groups. if CHAN_COMB_VEC = 0xF030000000000000 sums the first 4 samples and outputs one sample, sums 5th-9th samples and passes one sample, combines 10th-12th samples, outputs one sample and then streams the rest of the input

Copyright © 2025 Texas Instruments Incorporated

7.4.13.1.88 CHAN_COMB_VEC_7 Register (Offset = 4F0h) [Reset = 0h]

CHAN_COMB_VEC_7 is shown in the figure and described in the table.

Return to the Summary Table.

Figure 7-225. CHAN_COMB_VEC_7 Register

31	30	29	28	27	26	25	24	23	22	21	20	19	18	17	16	15	14	13	12	11	10	9	8	7	6	5	4	3	2	1	0
chan_comb_vec_7																															
R/W-0h																															

Table 7-192. CHAN_COMB_VEC_7 Register Field Descriptions

Bit	Field	Type	Reset	Description
31-0	chan_comb_vec_7	R/W	0h	Channel combination MASK for 224 to 255 samples Vector indicating the samples indices that need to be combined. A 01 or 10 transition demarcates the groups. if CHAN_COMB_VEC = 0xF030000000000000 sums the first 4 samples and outputs one sample, sums 5th-9th samples and passes one sample, combines 10th-12th samples, outputs one sample and then streams the rest of the input

Copyright © 2025 Texas Instruments Incorporated

7.4.13.1.89 CHANNEL_COMB_CLIP_STATUS Register (Offset = 4F4h) [Reset = X]

CHANNEL_COMB_CLIP_STATUS is shown in the figure and described in the table.

Return to the Summary Table.

Figure 7-226. CHANNEL_COMB_CLIP_STATUS Register

31	30	29	28	27	26	25	24
RESERVED							
R-X							
23	22	21	20	19	18	17	16
RESERVED							
R-X							
15	14	13	12	11	10	9	8
RESERVED							
R-X							
7	6	5	4	3	2	1	0
RESERVED							channel_comb_clip_status
R-X							R-0h

Table 7-193. CHANNEL_COMB_CLIP_STATUS Register Field Descriptions

Bit	Field	Type	Reset	Description
31-1	RESERVED	R	X	
0	channel_comb_clip_status	R	0h	Indicates the clip status of the channel combination

Copyright © 2025 Texas Instruments Incorporated

7.4.13.1.90 ZERO_INSERT_NUM Register (Offset = 4F8h) [Reset = X]

ZERO_INSERT_NUM is shown in the figure and described in the table.

Return to the Summary Table.

Figure 7-227. ZERO_INSERT_NUM Register

31	30	29	28	27	26	25	24	23	22	21	20	19	18	17	16
RESERVED															
R/W-X															
15	14	13	12	11	10	9	8	7	6	5	4	3	2	1	0
RESERVED								zero_insert_num							
R/W-X								R/W-0h							

Table 7-194. ZERO_INSERT_NUM Register Field Descriptions

Bit	Field	Type	Reset	Description
31-8	RESERVED	R/W	X	
7-0	zero_insert_num	R/W	0h	Number of zeros to be inserted in an iteration

Copyright © 2025 Texas Instruments Incorporated

7.4.13.1.91 ZERO_INSERT_MASK_0 Register (Offset = 4FCh) [Reset = 0h]

ZERO_INSERT_MASK_0 is shown in the figure and described in the table.

Return to the Summary Table.

Figure 7-228. ZERO_INSERT_MASK_0 Register

31	30	29	28	27	26	25	24	23	22	21	20	19	18	17	16	15	14	13	12	11	10	9	8	7	6	5	4	3	2	1	0
zero_insert_mask_0																															
R/W-0h																															

Table 7-195. ZERO_INSERT_MASK_0 Register Field Descriptions

Bit	Field	Type	Reset	Description
31-0	zero_insert_mask_0	R/W	0h	Zero insert mask for samples 0 to 31 A bit-field of 0 inserts a zero at location based on bit-field index. 1 means the input is passed through. Up-stream and down-stream processing is stalled during the zero insertion

Copyright © 2025 Texas Instruments Incorporated

7.4.13.1.92 ZERO_INSERT_MASK_1 Register (Offset = 500h) [Reset = 0h]

ZERO_INSERT_MASK_1 is shown in the figure and described in the table.

Return to the Summary Table.

Figure 7-229. ZERO_INSERT_MASK_1 Register

31	30	29	28	27	26	25	24	23	22	21	20	19	18	17	16	15	14	13	12	11	10	9	8	7	6	5	4	3	2	1	0
zero_insert_mask_1																															
R/W-0h																															

Table 7-196. ZERO_INSERT_MASK_1 Register Field Descriptions

Bit	Field	Type	Reset	Description
31-0	zero_insert_mask_1	R/W	0h	Zero insert mask for samples 32 to 63 A bit-field of 0 inserts a zero at location based on bit-field index. 1 means the input is passed through. Up-stream and down-stream processing is stalled during the zero insertion

Copyright © 2025 Texas Instruments Incorporated

7.4.13.1.93 ZERO_INSERT_MASK_2 Register (Offset = 504h) [Reset = 0h]

ZERO_INSERT_MASK_2 is shown in the figure and described in the table.

Return to the Summary Table.

Figure 7-230. ZERO_INSERT_MASK_2 Register

31	30	29	28	27	26	25	24	23	22	21	20	19	18	17	16	15	14	13	12	11	10	9	8	7	6	5	4	3	2	1	0
zero_insert_mask_2																															
R/W-0h																															

Table 7-197. ZERO_INSERT_MASK_2 Register Field Descriptions

Bit	Field	Type	Reset	Description
31-0	zero_insert_mask_2	R/W	0h	Zero insert mask for samples 64 to 95 A bit-field of 0 inserts a zero at location based on bit-field index. 1 means the input is passed through. Up-stream and down-stream processing is stalled during the zero insertion

Copyright © 2025 Texas Instruments Incorporated

7.4.13.1.94 ZERO_INSERT_MASK_3 Register (Offset = 508h) [Reset = 0h]

ZERO_INSERT_MASK_3 is shown in the figure and described in the table.

Return to the Summary Table.

Figure 7-231. ZERO_INSERT_MASK_3 Register

31	30	29	28	27	26	25	24	23	22	21	20	19	18	17	16	15	14	13	12	11	10	9	8	7	6	5	4	3	2	1	0
zero_insert_mask_3																															
R/W-0h																															

Table 7-198. ZERO_INSERT_MASK_3 Register Field Descriptions

Bit	Field	Type	Reset	Description
31-0	zero_insert_mask_3	R/W	0h	Zero insert mask for samples 96 to 127 A bit-field of 0 inserts a zero at location based on bit-field index. 1 means the input is passed through. Up-stream and down-stream processing is stalled during the zero insertion

Copyright © 2025 Texas Instruments Incorporated

7.4.13.1.95 ZERO_INSERT_MASK_4 Register (Offset = 50Ch) [Reset = 0h]

ZERO_INSERT_MASK_4 is shown in the figure and described in the table.

Return to the Summary Table.

Figure 7-232. ZERO_INSERT_MASK_4 Register

31	30	29	28	27	26	25	24	23	22	21	20	19	18	17	16	15	14	13	12	11	10	9	8	7	6	5	4	3	2	1	0
zero_insert_mask_4																															
R/W-0h																															

Table 7-199. ZERO_INSERT_MASK_4 Register Field Descriptions

Bit	Field	Type	Reset	Description
31-0	zero_insert_mask_4	R/W	0h	Zero insert mask for samples 128 to 159 A bit-field of 0 inserts a zero at location based on bit-field index. 1 means the input is passed through. Up-stream and down-stream processing is stalled during the zero insertion

Copyright © 2025 Texas Instruments Incorporated

7.4.13.1.96 ZERO_INSERT_MASK_5 Register (Offset = 510h) [Reset = 0h]

ZERO_INSERT_MASK_5 is shown in the figure and described in the table.

Return to the Summary Table.

Figure 7-233. ZERO_INSERT_MASK_5 Register

31	30	29	28	27	26	25	24	23	22	21	20	19	18	17	16	15	14	13	12	11	10	9	8	7	6	5	4	3	2	1	0
zero_insert_mask_5																															
R/W-0h																															

Table 7-200. ZERO_INSERT_MASK_5 Register Field Descriptions

Bit	Field	Type	Reset	Description
31-0	zero_insert_mask_5	R/W	0h	Zero insert mask for samples 160 to 191 A bit-field of 0 inserts a zero at location based on bit-field index. 1 means the input is passed through. Up-stream and down-stream processing is stalled during the zero insertion

Copyright © 2025 Texas Instruments Incorporated

7.4.13.1.97 ZERO_INSERT_MASK_6 Register (Offset = 514h) [Reset = 0h]

ZERO_INSERT_MASK_6 is shown in the figure and described in the table.

Return to the Summary Table.

Figure 7-234. ZERO_INSERT_MASK_6 Register

31	30	29	28	27	26	25	24	23	22	21	20	19	18	17	16	15	14	13	12	11	10	9	8	7	6	5	4	3	2	1	0
zero_insert_mask_6																															
R/W-0h																															

Table 7-201. ZERO_INSERT_MASK_6 Register Field Descriptions

Bit	Field	Type	Reset	Description
31-0	zero_insert_mask_6	R/W	0h	Zero insert mask for samples 192 to 223 A bit field of 0 inserts a zero at location based on bit-field index. 1 means the input is passed through. Up-stream and down-stream processing is stalled during the zero insertion

Copyright © 2025 Texas Instruments Incorporated

7.4.13.1.98 ZERO_INSERT_MASK_7 Register (Offset = 518h) [Reset = 0h]

ZERO_INSERT_MASK_7 is shown in the figure and described in the table.

Return to the Summary Table.

Figure 7-235. ZERO_INSERT_MASK_7 Register

31	30	29	28	27	26	25	24	23	22	21	20	19	18	17	16	15	14	13	12	11	10	9	8	7	6	5	4	3	2	1	0
zero_insert_mask_7																															
R/W-0h																															

Table 7-202. ZERO_INSERT_MASK_7 Register Field Descriptions

Bit	Field	Type	Reset	Description
31-0	zero_insert_mask_7	R/W	0h	Zero insert mask for samples 224 to 255 A bit-field of 0 inserts a zero at location based on bit-field index. 1 means the input is passed through. Up-stream and down-stream processing is stalled during the zero insertion

Copyright © 2025 Texas Instruments Incorporated

7.4.13.1.99 ZERO_INSERT_RESERVED_1 Register (Offset = 51Ch) [Reset = 0h]

ZERO_INSERT_RESERVED_1 is shown in the figure and described in the table.

Return to the Summary Table.

Figure 7-236. ZERO_INSERT_RESERVED_1 Register

31	30	29	28	27	26	25	24	23	22	21	20	19	18	17	16	15	14	13	12	11	10	9	8	7	6	5	4	3	2	1	0
RESERVED																															
R/W-0h																															

Table 7-203. ZERO_INSERT_RESERVED_1 Register Field Descriptions

Bit	Field	Type	Reset	Description
31-0	RESERVED	R/W	0h	Reserved for future addition

Copyright © 2025 Texas Instruments Incorporated

7.4.13.1.100 ZERO_INSERT_RESERVED_2 Register (Offset = 520h) [Reset = 0h]

ZERO_INSERT_RESERVED_2 is shown in the figure and described in the table.

Return to the Summary Table.

Figure 7-237. ZERO_INSERT_RESERVED_2 Register

31	30	29	28	27	26	25	24	23	22	21	20	19	18	17	16	15	14	13	12	11	10	9	8	7	6	5	4	3	2	1	0
RESERVED																															
R/W-0h																															

Table 7-204. ZERO_INSERT_RESERVED_2 Register Field Descriptions

Bit	Field	Type	Reset	Description
31-0	RESERVED	R/W	0h	Reserved for future addition

Copyright © 2025 Texas Instruments Incorporated

7.4.13.1.101 ZERO_INSERT_RESERVED_3 Register (Offset = 524h) [Reset = 0h]

ZERO_INSERT_RESERVED_3 is shown in the figure and described in the table.

Return to the Summary Table.

Figure 7-238. ZERO_INSERT_RESERVED_3 Register

31	30	29	28	27	26	25	24	23	22	21	20	19	18	17	16	15	14	13	12	11	10	9	8	7	6	5	4	3	2	1	0
RESERVED																															
R/W-0h																															

Table 7-205. ZERO_INSERT_RESERVED_3 Register Field Descriptions

Bit	Field	Type	Reset	Description
31-0	RESERVED	R/W	0h	Reserved for future addition

Copyright © 2025 Texas Instruments Incorporated

7.4.13.1.102 ZERO_INSERT_RESERVED_4 Register (Offset = 528h) [Reset = 0h]

ZERO_INSERT_RESERVED_4 is shown in the figure and described in the table.

Return to the Summary Table.

Figure 7-239. ZERO_INSERT_RESERVED_4 Register

31	30	29	28	27	26	25	24	23	22	21	20	19	18	17	16	15	14	13	12	11	10	9	8	7	6	5	4	3	2	1	0
RESERVED																															
R/W-0h																															

Table 7-206. ZERO_INSERT_RESERVED_4 Register Field Descriptions

Bit	Field	Type	Reset	Description
31-0	RESERVED	R/W	0h	Reserved for future addition

Copyright © 2025 Texas Instruments Incorporated

7.4.13.1.103 LFSR_SEED Register (Offset = 52Ch) [Reset = X]

LFSR_SEED is shown in the figure and described in the table.

Return to the Summary Table.

Figure 7-240. LFSR_SEED Register

31	30	29	28	27	26	25	24	23	22	21	20	19	18	17	16	15	14	13	12	11	10	9	8	7	6	5	4	3	2	1	0
RESERVED			lfsr_seed																												
R/W-X			R/W-0h																												

Table 7-207. LFSR_SEED Register Field Descriptions

Bit	Field	Type	Reset	Description
31-29	RESERVED	R/W	X	
28-0	lfsr_seed	R/W	0h	Seed for LFSR (random pattern): For twiddle factor dithering, there is an LFSR that is used, whose seed value is loaded by writing to this 29-bit LFSRSEED register. The LFSRSEED register should be set to any non-zero value, say 0x1234567

Copyright © 2025 Texas Instruments Incorporated

7.4.13.1.104 LFSR_LOAD Register (Offset = 530h) [Reset = X]

LFSR_LOAD is shown in the figure and described in the table.

Return to the Summary Table.

Figure 7-241. LFSR_LOAD Register

31	30	29	28	27	26	25	24
RESERVED							
R/W-X							
23	22	21	20	19	18	17	16
RESERVED							
R/W-X							
15	14	13	12	11	10	9	8
RESERVED							
R/W-X							
7	6	5	4	3	2	1	0
RESERVED							lfsr_load
R/W-X							R/W-0h

Table 7-208. LFSR_LOAD Register Field Descriptions

Bit	Field	Type	Reset	Description
31-1	RESERVED	R/W	X	
0	lfsr_load	R/W	0h	Its self clearing bit . It should be set for loading the LFSR_SEED. It s a self clearing bit

Copyright © 2025 Texas Instruments Incorporated

7.4.13.1.105 DITHER_TWID_EN Register (Offset = 534h) [Reset = X]

DITHER_TWID_EN is shown in the figure and described in the table.

Return to the Summary Table.

Figure 7-242. DITHER_TWID_EN Register

31	30	29	28	27	26	25	24
RESERVED							
R/W-X							
23	22	21	20	19	18	17	16
RESERVED							
R/W-X							
15	14	13	12	11	10	9	8
RESERVED							
R/W-X							
7	6	5	4	3	2	1	0
RESERVED							dither_twid_en
R/W-X							R/W-0h

Table 7-209. DITHER_TWID_EN Register Field Descriptions

Bit	Field	Type	Reset	Description
31-1	RESERVED	R/W	X	
0	dither_twid_en	R/W	0h	Twiddle factor dithering enable: This register-bit is used to enable and disable dithering of twiddle factors in the FFT. The twiddle factors are 24-bits wide (24-bits for each I and Q), but they are quantized to 21-bits before twiddle factor multiplication. This quantization is implemented with dithering on the LSB, to avoid periodic quantization pattern affecting SFDR performance of the FFT. TI recommends keeping this register bit set to 1 (for example, dithering enabled), with appropriate LSFR seed loaded (see the following).

Copyright © 2025 Texas Instruments Incorporated

7.4.13.1.106 FFT_CLIP Register (Offset = 538h) [Reset = X]

FFT_CLIP is shown in the figure and described in the table.

Return to the Summary Table.

Figure 7-243. FFT_CLIP Register

31	30	29	28	27	26	25	24	23	22	21	20	19	18	17	16	15	14	13	12	11	10	9	8	7	6	5	4	3	2	1	0
RESERVED																			fft_clip												
R-X																			R-0h											

Table 7-210. FFT_CLIP Register Field Descriptions

Bit	Field	Type	Reset	Description
31-13	RESERVED	R	X	
12-0	fft_clip	R	0h	FFT Clip Status (read-only): This is a read-only status register, which indicates any saturation/clipping events that have happened in the FFT butterfly stages. Note that each of the individual butterfly stages in the FFT can be programmed to either saturate the MSB or round the LSB. Whenever saturation of MSB is used in any stage, there is a possibility that that stage can saturate or clip samples. In that case, this saturation event is indicated in the corresponding bit in this status register, so that the Cortex-R4F processor can read it. If multiple FFTs are performed, this status register includes any saturation events happening in any of them. This status register can only be cleared by the R4F, by setting another single-bit register CLR_FFTCLIP, so that the saturation status indication gets cleared back to 0 and any subsequent saturation events can be freshly monitored. The MSB of this register indicates clip status corresponding to the radix 3 butterfly.

Copyright © 2025 Texas Instruments Incorporated

7.4.13.1.107 CLR_FFTCLIP Register (Offset = 53Ch) [Reset = X]

CLR_FFTCLIP is shown in the figure and described in the table.

Return to the Summary Table.

Figure 7-244. CLR_FFTCLIP Register

31	30	29	28	27	26	25	24
RESERVED							
R/W-X							
23	22	21	20	19	18	17	16
RESERVED							
R/W-X							
15	14	13	12	11	10	9	8
RESERVED							
R/W-X							
7	6	5	4	3	2	1	0
RESERVED							clr_fftclip
R/W-X							R/W-0h

Table 7-211. CLR_FFTCLIP Register Field Descriptions

Bit	Field	Type	Reset	Description
31-1	RESERVED	R/W	X	
0	clr_fftclip	R/W	0h	Clear FFT Clip Status register: This register bit, when set, clears the FFTCLIP register. It s a self clearing bit

Copyright © 2025 Texas Instruments Incorporated

7.4.13.1.108 CLR_CLIP_MISC Register (Offset = 540h) [Reset = X]

CLR_CLIP_MISC is shown in the figure and described in the table.

Return to the Summary Table.

Figure 7-245. CLR_CLIP_MISC Register

31	30	29	28	27	26	25	24
RESERVED							
R/W-X							
23	22	21	20	19	18	17	16
RESERVED							
R/W-X							
15	14	13	12	11	10	9	8
RESERVED							
R/W-X							
7	6	5	4	3	2	1	0
RESERVED							clr_clip_status
R/W-X							R/W-0h

Table 7-212. CLR_CLIP_MISC Register Field Descriptions

Bit	Field	Type	Reset	Description
31-1	RESERVED	R/W	X	
0	clr_clip_status	R/W	0h	This clears the following clip register channel_comb_clip_status dc_acc_clip_status dc_est_clip_status intf_stats_mag_accumulator_clip_status intf_stats_magdiff_accumulator_clip_status intf_stats_thresh_mag_clip_status intf_stats_thresh_magdiff_clip_status twid_incr_delta_frac_clip_status ip_formatter_clip_status op_formatter_clip_status intf_stats_sum_mag_val_clip_status intf_stats_sum_magdiff_val_clip_status dc_sub_clip Its a self clearing bit

Copyright © 2025 Texas Instruments Incorporated

7.4.13.1.109 IP_OP_FORMATTER_CLIP_STATUS Register (Offset = 544h) [Reset = X]

IP_OP_FORMATTER_CLIP_STATUS is shown in the figure and described in the table.

Return to the Summary Table.

Figure 7-246. IP_OP_FORMATTER_CLIP_STATUS Register

31	30	29	28	27	26	25	24
RESERVED							
R-X							
23	22	21	20	19	18	17	16
RESERVED							op_formatter_clip_status
R-X							R-0h
15	14	13	12	11	10	9	8
RESERVED							
R-X							
7	6	5	4	3	2	1	0
RESERVED							ip_formatter_clip_status
R-X							R-0h

Table 7-213. IP_OP_FORMATTER_CLIP_STATUS Register Field Descriptions

Bit	Field	Type	Reset	Description
31-17	RESERVED	R	X	
16	op_formatter_clip_status	R	0h	Indicates the output formatter clip status
15-1	RESERVED	R	X	
0	ip_formatter_clip_status	R	0h	Indicates the input formatter clip status

Copyright © 2025 Texas Instruments Incorporated

7.4.13.1.110 FFT_RESERVED_1 Register (Offset = 548h) [Reset = 0h]

FFT_RESERVED_1 is shown in the figure and described in the table.

Return to the Summary Table.

Figure 7-247. FFT_RESERVED_1 Register

31	30	29	28	27	26	25	24	23	22	21	20	19	18	17	16	15	14	13	12	11	10	9	8	7	6	5	4	3	2	1	0
RESERVED																															
R/W-0h																															

Table 7-214. FFT_RESERVED_1 Register Field Descriptions

Bit	Field	Type	Reset	Description
31-0	RESERVED	R/W	0h	Reserved for future addition

Copyright © 2025 Texas Instruments Incorporated

7.4.13.1.111 FFT_RESERVED_2 Register (Offset = 54Ch) [Reset = 0h]

FFT_RESERVED_2 is shown in the figure and described in the table.

Return to the Summary Table.

Figure 7-248. FFT_RESERVED_2 Register

31	30	29	28	27	26	25	24	23	22	21	20	19	18	17	16	15	14	13	12	11	10	9	8	7	6	5	4	3	2	1	0
RESERVED																															
R/W-0h																															

Table 7-215. FFT_RESERVED_2 Register Field Descriptions

Bit	Field	Type	Reset	Description
31-0	RESERVED	R/W	0h	Reserved for future addition

Copyright © 2025 Texas Instruments Incorporated

7.4.13.1.112 FFT_RESERVED_3 Register (Offset = 550h) [Reset = 0h]

FFT_RESERVED_3 is shown in the figure and described in the table.

Return to the Summary Table.

Figure 7-249. FFT_RESERVED_3 Register

31	30	29	28	27	26	25	24	23	22	21	20	19	18	17	16	15	14	13	12	11	10	9	8	7	6	5	4	3	2	1	0
RESERVED																															
R/W-0h																															

Table 7-216. FFT_RESERVED_3 Register Field Descriptions

Bit	Field	Type	Reset	Description
31-0	RESERVED	R/W	0h	Reserved for future addition

Copyright © 2025 Texas Instruments Incorporated

7.4.13.1.113 MAX1_VALUE Register (Offset = 554h) [Reset = X]

MAX1_VALUE is shown in the figure and described in the figure.

Return to the Summary Table.

Figure 7-250. MAX1_VALUE Register

31	30	29	28	27	26	25	24	23	22	21	20	19	18	17	16	15	14	13	12	11	10	9	8	7	6	5	4	3	2	1	0
RESERVED								max1_value																							
R-X								R-0h																							

Table 7-217. MAX1_VALUE Register Field Descriptions

Bit	Field	Type	Reset	Description
31-24	RESERVED	R	X	
23-0	max1_value	R	0h	These registers contain the max value on a per-iteration basis. These registers are meaningful only when Magnitude or Log-Magnitude is enabled. Only the max values for up to four iterations are recorded in these registers. For larger number of iterations, max values are wriiten into destination memory by configuring FFT_OUTPUT_MODE

Copyright © 2025 Texas Instruments Incorporated

7.4.13.1.114 MAX2_VALUE Register (Offset = 558h) [Reset = X]

MAX2_VALUE is shown in the figure and described in the table.

Return to the Summary Table.

Figure 7-251. MAX2_VALUE Register

31	30	29	28	27	26	25	24	23	22	21	20	19	18	17	16	15	14	13	12	11	10	9	8	7	6	5	4	3	2	1	0
RESERVED								max2_value																							
R-X								R-0h																							

Table 7-218. MAX2_VALUE Register Field Descriptions

Bit	Field	Type	Reset	Description
31-24	RESERVED	R	X	
23-0	max2_value	R	0h	These registers contain the max value on a per-iteration basis. These registers are meaningful only when Magnitude or Log-Magnitude is enabled. Only the max values for up to four iterations are recorded in these registers. For larger number of iterations, max values are wriiten into destination memory by configuring FFT_OUTPUT_MODE

Copyright © 2025 Texas Instruments Incorporated

7.4.13.1.115 MAX3_VALUE Register (Offset = 55Ch) [Reset = X]

MAX3_VALUE is shown in the figure and described in the table.

Return to the Summary Table.

Figure 7-252. MAX3_VALUE Register

31	30	29	28	27	26	25	24	23	22	21	20	19	18	17	16	15	14	13	12	11	10	9	8	7	6	5	4	3	2	1	0
RESERVED								max3_value																							
R-X								R-0h																							

Table 7-219. MAX3_VALUE Register Field Descriptions

Bit	Field	Type	Reset	Description
31-24	RESERVED	R	X	
23-0	max3_value	R	0h	These registers contain the max value on a per-iteration basis. These registers are meaningful only when Magnitude or Log-Magnitude is enabled. Only the max values for up to four iterations are recorded in these registers. For larger number of iterations, max values are wriiten into destination memory by configuring FFT_OUTPUT_MODE

Copyright © 2025 Texas Instruments Incorporated

7.4.13.1.116 MAX4_VALUE Register (Offset = 560h) [Reset = X]

MAX4_VALUE is shown in the figure and described in the table.

Return to the Summary Table.

Figure 7-253. MAX4_VALUE Register

31	30	29	28	27	26	25	24	23	22	21	20	19	18	17	16	15	14	13	12	11	10	9	8	7	6	5	4	3	2	1	0
RESERVED								max4_value																							
R-X								R-0h																							

Table 7-220. MAX4_VALUE Register Field Descriptions

Bit	Field	Type	Reset	Description
31-24	RESERVED	R	X	
23-0	max4_value	R	0h	These registers contain the max value on a per-iteration basis. These registers are meaningful only when Magnitude or Log-Magnitude is enabled. Only the max values for up to four iterations are recorded in these registers. For larger number of iterations, max values are wriiten into destination memory by configuring FFT_OUTPUT_MODE

Copyright © 2025 Texas Instruments Incorporated

7.4.13.1.117 MAX1_INDEX Register (Offset = 564h) [Reset = X]

MAX1_INDEX is shown in the figure and described in the table.

Return to the Summary Table.

Figure 7-254. MAX1_INDEX Register

31	30	29	28	27	26	25	24	23	22	21	20	19	18	17	16	15	14	13	12	11	10	9	8	7	6	5	4	3	2	1	0
RESERVED																				max1_index											
R-X																				R-0h											

Table 7-221. MAX1_INDEX Register Field Descriptions

Bit	Field	Type	Reset	Description
31-12	RESERVED	R	X	
11-0	max1_index	R	0h	These registers contain the max index on a per-iteration basis, corresponding to each max value in the MAXn_VALUE registers.

Copyright © 2025 Texas Instruments Incorporated

7.4.13.1.118 MAX2_INDEX Register (Offset = 568h) [Reset = X]

MAX2_INDEX is shown in the figure and described in the table.

Return to the Summary Table.

Figure 7-255. MAX2_INDEX Register

31	30	29	28	27	26	25	24	23	22	21	20	19	18	17	16	15	14	13	12	11	10	9	8	7	6	5	4	3	2	1	0
RESERVED																				max2_index											
R-X																				R-0h											

Table 7-222. MAX2_INDEX Register Field Descriptions

Bit	Field	Type	Reset	Description
31-12	RESERVED	R	X	
11-0	max2_index	R	0h	These registers contain the max index on a per-iteration basis, corresponding to each max value in the MAXn_VALUE registers.

Copyright © 2025 Texas Instruments Incorporated

7.4.13.1.119 MAX3_INDEX Register (Offset = 56Ch) [Reset = X]

MAX3_INDEX is shown in the figure and described in the table.

Return to the Summary Table.

Figure 7-256. MAX3_INDEX Register

31	30	29	28	27	26	25	24	23	22	21	20	19	18	17	16	15	14	13	12	11	10	9	8	7	6	5	4	3	2	1	0
RESERVED																				max3_index											
R-X																				R-0h											

Table 7-223. MAX3_INDEX Register Field Descriptions

Bit	Field	Type	Reset	Description
31-12	RESERVED	R	X	
11-0	max3_index	R	0h	These registers contain the max index on a per-iteration basis, corresponding to each max value in the MAXn_VALUE registers.

Copyright © 2025 Texas Instruments Incorporated

7.4.13.1.120 MAX4_INDEX Register (Offset = 570h) [Reset = X]

MAX4_INDEX is shown in the figure and described in the table.

Return to the Summary Table.

Figure 7-257. MAX4_INDEX Register

31	30	29	28	27	26	25	24	23	22	21	20	19	18	17	16	15	14	13	12	11	10	9	8	7	6	5	4	3	2	1	0
RESERVED																				max4_index											
R-X																				R-0h											

Table 7-224. MAX4_INDEX Register Field Descriptions

Bit	Field	Type	Reset	Description
31-12	RESERVED	R	X	
11-0	max4_index	R	0h	These registers contain the max index on a per-iteration basis, corresponding to each max value in the MAXn_VALUE registers.

Copyright © 2025 Texas Instruments Incorporated

7.4.13.1.121 I_SUM1_LSB Register (Offset = 574h) [Reset = 0h]

I_SUM1_LSB is shown in the figure and described in the table.

Return to the Summary Table.

Figure 7-258. I_SUM1_LSB Register

31	30	29	28	27	26	25	24	23	22	21	20	19	18	17	16	15	14	13	12	11	10	9	8	7	6	5	4	3	2	1	0
i_sum1_lsb																															
R-0h																															

Table 7-225. I_SUM1_LSB Register Field Descriptions

Bit	Field	Type	Reset	Description
31-0	i_sum1_lsb	R	0h	I Sum value 1 LSB 32 bits These registers contain the sum of the I outputs and Q outputs on a per-iteration basis. Only the statistics for up to four iterations are recorded in these registers. For larger number of iterations, use statistics output mode (FFT_OUTPUT_MODE) to write to destination memory

Copyright © 2025 Texas Instruments Incorporated

7.4.13.1.122 I_SUM1_MSB Register (Offset = 578h) [Reset = X]

I_SUM1_MSB is shown in the figure and described in the table.

Return to the Summary Table.

Figure 7-259. I_SUM1_MSB Register

31	30	29	28	27	26	25	24	23	22	21	20	19	18	17	16
RESERVED															
R-X															
15	14	13	12	11	10	9	8	7	6	5	4	3	2	1	0
RESERVED												i_sum1_msb			
R-X												R-0h			

Table 7-226. I_SUM1_MSB Register Field Descriptions

Bit	Field	Type	Reset	Description
31-4	RESERVED	R	X	
3-0	i_sum1_msb	R	0h	I Sum value 1 MSB 4 bits These registers contain the sum of the I outputs and Q outputs on a per-iteration basis. Only the statistics for up to four iterations are recorded in these registers. For larger number of iterations, use statistics output mode (FFT_OUTPUT_MODE) to write to destination memory

Copyright © 2025 Texas Instruments Incorporated

7.4.13.1.123 I_SUM2_LSB Register (Offset = 57Ch) [Reset = 0h]

I_SUM2_LSB is shown in the figure and described in the table.

Return to the Summary Table.

Figure 7-260. I_SUM2_LSB Register

31	30	29	28	27	26	25	24	23	22	21	20	19	18	17	16	15	14	13	12	11	10	9	8	7	6	5	4	3	2	1	0
i_sum2_lsb																															
R-0h																															

Table 7-227. I_SUM2_LSB Register Field Descriptions

Bit	Field	Type	Reset	Description
31-0	i_sum2_lsb	R	0h	I Sum value 2 LSB 32 bits These registers contain the sum of the I outputs and Q outputs on a per-iteration basis. Only the statistics for up to four iterations are recorded in these registers. For larger number of iterations, use statistics output mode (FFT_OUTPUT_MODE) to write to destination memory

Copyright © 2025 Texas Instruments Incorporated

7.4.13.1.124 I_SUM2_MSB Register (Offset = 580h) [Reset = X]

I_SUM2_MSB is shown in the figure and described in the table.

Return to the Summary Table.

Figure 7-261. I_SUM2_MSB Register

31	30	29	28	27	26	25	24	23	22	21	20	19	18	17	16
RESERVED															
R-X															
15	14	13	12	11	10	9	8	7	6	5	4	3	2	1	0
RESERVED												i_sum2_msb			
R-X												R-0h			

Table 7-228. I_SUM2_MSB Register Field Descriptions

Bit	Field	Type	Reset	Description
31-4	RESERVED	R	X	
3-0	i_sum2_msb	R	0h	I Sum value 2 MSB 4 bits These registers contain the sum of the I outputs and Q outputs on a per-iteration basis. Only the statistics for up to four iterations are recorded in these registers. For larger number of iterations, use statistics output mode (FFT_OUTPUT_MODE) to write to destination memory

Copyright © 2025 Texas Instruments Incorporated

7.4.13.1.125 I_SUM3_LSB Register (Offset = 584h) [Reset = 0h]

I_SUM3_LSB is shown in the figure and described in the table.

Return to the Summary Table.

Figure 7-262. I_SUM3_LSB Register

31	30	29	28	27	26	25	24	23	22	21	20	19	18	17	16	15	14	13	12	11	10	9	8	7	6	5	4	3	2	1	0
i_sum3_lsb																															
R-0h																															

Table 7-229. I_SUM3_LSB Register Field Descriptions

Bit	Field	Type	Reset	Description
31-0	i_sum3_lsb	R	0h	I Sum value 3 LSB 32 bits These registers contain the sum of the I outputs and Q outputs on a per-iteration basis. Only the statistics for up to four iterations are recorded in these registers. For larger number of iterations, use statistics output mode (FFT_OUTPUT_MODE) to write to destination memory

Copyright © 2025 Texas Instruments Incorporated

7.4.13.1.126 I_SUM3_MSB Register (Offset = 588h) [Reset = X]

I_SUM3_MSB is shown in the figure and described in the table.

Return to the Summary Table.

Figure 7-263. I_SUM3_MSB Register

31	30	29	28	27	26	25	24	23	22	21	20	19	18	17	16
RESERVED															
R-X															
15	14	13	12	11	10	9	8	7	6	5	4	3	2	1	0
RESERVED												i_sum3_msb			
R-X												R-0h			

Table 7-230. I_SUM3_MSB Register Field Descriptions

Bit	Field	Type	Reset	Description
31-4	RESERVED	R	X	
3-0	i_sum3_msb	R	0h	I Sum value 3 MSB 4 bits These registers contain the sum of the I outputs and Q outputs on a per-iteration basis. Only the statistics for up to four iterations are recorded in these registers. For larger number of iterations, use statistics output mode (FFT_OUTPUT_MODE) to write to destination memory

Copyright © 2025 Texas Instruments Incorporated

7.4.13.1.127 I_SUM4_LSB Register (Offset = 58Ch) [Reset = 0h]

I_SUM4_LSB is shown in the figure and described in the table.

Return to the Summary Table.

Figure 7-264. I_SUM4_LSB Register

31	30	29	28	27	26	25	24	23	22	21	20	19	18	17	16	15	14	13	12	11	10	9	8	7	6	5	4	3	2	1	0
i_sum4_lsb																															
R-0h																															

Table 7-231. I_SUM4_LSB Register Field Descriptions

Bit	Field	Type	Reset	Description
31-0	i_sum4_lsb	R	0h	I Sum value 4 LSB 32 bits These registers contain the sum of the I outputs and Q outputs on a per-iteration basis. Only the statistics for up to four iterations are recorded in these registers. For larger number of iterations, use statistics output mode (FFT_OUTPUT_MODE) to write to destination memory

Copyright © 2025 Texas Instruments Incorporated

7.4.13.1.128 I_SUM4_MSB Register (Offset = 590h) [Reset = X]

I_SUM4_MSB is shown in the figure and described in the table.

Return to the Summary Table.

Figure 7-265. I_SUM4_MSB Register

31	30	29	28	27	26	25	24	23	22	21	20	19	18	17	16
RESERVED															
R-X															
15	14	13	12	11	10	9	8	7	6	5	4	3	2	1	0
RESERVED												i_sum4_msb			
R-X												R-0h			

Table 7-232. I_SUM4_MSB Register Field Descriptions

Bit	Field	Type	Reset	Description
31-4	RESERVED	R	X	
3-0	i_sum4_msb	R	0h	I Sum value 4 MSB 4 bits These registers contain the sum of the I outputs and Q outputs on a per-iteration basis. Only the statistics for up to four iterations are recorded in these registers. For larger number of iterations, use statistics output mode (FFT_OUTPUT_MODE) to write to destination memory

Copyright © 2025 Texas Instruments Incorporated

7.4.13.1.129 Q_SUM1_LSB Register (Offset = 594h) [Reset = 0h]

Q_SUM1_LSB is shown in the figure and described in the table.

Return to the Summary Table.

Figure 7-266. Q_SUM1_LSB Register

31	30	29	28	27	26	25	24	23	22	21	20	19	18	17	16	15	14	13	12	11	10	9	8	7	6	5	4	3	2	1	0
q_sum1_lsb																															
R-0h																															

Table 7-233. Q_SUM1_LSB Register Field Descriptions

Bit	Field	Type	Reset	Description
31-0	q_sum1_lsb	R	0h	Q Sum value 1 LSB 32 bits These registers contain the sum of the I outputs and Q outputs on a per-iteration basis. Only the statistics for up to four iterations are recorded in these registers. For larger number of iterations, use statistics output mode (FFT_OUTPUT_MODE) to write to destination memory

Copyright © 2025 Texas Instruments Incorporated

7.4.13.1.130 Q_SUM1_MSB Register (Offset = 598h) [Reset = X]

Q_SUM1_MSB is shown in the figure and described in the table.

Return to the Summary Table.

Figure 7-267. Q_SUM1_MSB Register

31	30	29	28	27	26	25	24	23	22	21	20	19	18	17	16
RESERVED															
R-X															
15	14	13	12	11	10	9	8	7	6	5	4	3	2	1	0
RESERVED												q_sum1_msb			
R-X												R-0h			

Table 7-234. Q_SUM1_MSB Register Field Descriptions

Bit	Field	Type	Reset	Description
31-4	RESERVED	R	X	
3-0	q_sum1_msb	R	0h	Q Sum value 1 MSB 4 bits These registers contain the sum of the I outputs and Q outputs on a per-iteration basis. Only the statistics for up to four iterations are recorded in these registers. For larger number of iterations, use statistics output mode (FFT_OUTPUT_MODE) to write to destination memory

Copyright © 2025 Texas Instruments Incorporated

7.4.13.1.131 Q_SUM2_LSB Register (Offset = 59Ch) [Reset = 0h]

Q_SUM2_LSB is shown in the figure and described in the table.

Return to the Summary Table.

Figure 7-268. Q_SUM2_LSB Register

31	30	29	28	27	26	25	24	23	22	21	20	19	18	17	16	15	14	13	12	11	10	9	8	7	6	5	4	3	2	1	0
q_sum2_lsb																															
R-0h																															

Table 7-235. Q_SUM2_LSB Register Field Descriptions

Bit	Field	Type	Reset	Description
31-0	q_sum2_lsb	R	0h	Q Sum value 2 LSB 32 bits These registers contain the sum of the I outputs and Q outputs on a per-iteration basis. Only the statistics for up to four iterations are recorded in these registers. For larger number of iterations, use statistics output mode (FFT_OUTPUT_MODE) to write to destination memory

Copyright © 2025 Texas Instruments Incorporated

7.4.13.1.132 Q_SUM2_MSB Register (Offset = 5A0h) [Reset = X]

Q_SUM2_MSB is shown in the figure and described in the table.

Return to the Summary Table.

Figure 7-269. Q_SUM2_MSB Register

31	30	29	28	27	26	25	24	23	22	21	20	19	18	17	16
RESERVED															
R-X															
15	14	13	12	11	10	9	8	7	6	5	4	3	2	1	0
RESERVED												q_sum2_msb			
R-X												R-0h			

Table 7-236. Q_SUM2_MSB Register Field Descriptions

Bit	Field	Type	Reset	Description
31-4	RESERVED	R	X	
3-0	q_sum2_msb	R	0h	Q Sum value 2 MSB 4 bits These registers contain the sum of the I outputs and Q outputs on a per-iteration basis. Only the statistics for up to four iterations are recorded in these registers. For larger number of iterations, use statistics output mode (FFT_OUTPUT_MODE) to write to destination memory

Copyright © 2025 Texas Instruments Incorporated

7.4.13.1.133 Q_SUM3_LSB Register (Offset = 5A4h) [Reset = 0h]

Q_SUM3_LSB is shown in the figure and described in the table.

Return to the Summary Table.

Figure 7-270. Q_SUM3_LSB Register

31	30	29	28	27	26	25	24	23	22	21	20	19	18	17	16	15	14	13	12	11	10	9	8	7	6	5	4	3	2	1	0
q_sum3_lsb																															
R-0h																															

Table 7-237. Q_SUM3_LSB Register Field Descriptions

Bit	Field	Type	Reset	Description
31-0	q_sum3_lsb	R	0h	Q Sum value 3 LSB 32 bits These registers contain the sum of the I outputs and Q outputs on a per-iteration basis. Only the statistics for up to four iterations are recorded in these registers. For larger number of iterations, use statistics output mode (FFT_OUTPUT_MODE) to write to destination memory

Copyright © 2025 Texas Instruments Incorporated

7.4.13.1.134 Q_SUM3_MSB Register (Offset = 5A8h) [Reset = X]

Q_SUM3_MSB is shown in the figure and described in the table.

Return to the Summary Table.

Figure 7-271. Q_SUM3_MSB Register

31	30	29	28	27	26	25	24	23	22	21	20	19	18	17	16
RESERVED															
R-X															
15	14	13	12	11	10	9	8	7	6	5	4	3	2	1	0
RESERVED												q_sum3_msb			
R-X												R-0h			

Table 7-238. Q_SUM3_MSB Register Field Descriptions

Bit	Field	Type	Reset	Description
31-4	RESERVED	R	X	
3-0	q_sum3_msb	R	0h	Q Sum value 3 MSB 4 bits These registers contain the sum of the I outputs and Q outputs on a per-iteration basis. Only the statistics for up to four iterations are recorded in these registers. For larger number of iterations, use statistics output mode (FFT_OUTPUT_MODE) to write to destination memory

Copyright © 2025 Texas Instruments Incorporated

7.4.13.1.135 Q_SUM4_LSB Register (Offset = 5ACh) [Reset = 0h]

Q_SUM4_LSB is shown in the figure and described in the table.

Return to the Summary Table.

Figure 7-272. Q_SUM4_LSB Register

31	30	29	28	27	26	25	24	23	22	21	20	19	18	17	16	15	14	13	12	11	10	9	8	7	6	5	4	3	2	1	0
q_sum4_lsb																															
R-0h																															

Table 7-239. Q_SUM4_LSB Register Field Descriptions

Bit	Field	Type	Reset	Description
31-0	q_sum4_lsb	R	0h	Q Sum value 4 LSB 32 bits These registers contain the sum of the I outputs and Q outputs on a per-iteration basis. Only the statistics for up to four iterations are recorded in these registers. For larger number of iterations, use statistics output mode (FFT_OUTPUT_MODE) to write to destination memory

Copyright © 2025 Texas Instruments Incorporated

7.4.13.1.136 Q_SUM4_MSB Register (Offset = 5B0h) [Reset = X]

Q_SUM4_MSB is shown in the figure and described in the table.

Return to the Summary Table.

Figure 7-273. Q_SUM4_MSB Register

31	30	29	28	27	26	25	24	23	22	21	20	19	18	17	16
RESERVED															
R-X															
15	14	13	12	11	10	9	8	7	6	5	4	3	2	1	0
RESERVED												q_sum4_msb			
R-X												R-0h			

Table 7-240. Q_SUM4_MSB Register Field Descriptions

Bit	Field	Type	Reset	Description
31-4	RESERVED	R	X	
3-0	q_sum4_msb	R	0h	Q Sum value 4 MSB 4 bits These registers contain the sum of the I outputs and Q outputs on a per-iteration basis. Only the statistics for up to four iterations are recorded in these registers. For larger number of iterations, use statistics output mode (FFT_OUTPUT_MODE) to write to destination memory

Copyright © 2025 Texas Instruments Incorporated

7.4.13.1.137 FFTSUMDIV Register (Offset = 5B4h) [Reset = X]

FFTSUMDIV is shown in the figure and described in the table.

Return to the Summary Table.

Figure 7-274. FFTSUMDIV Register

31	30	29	28	27	26	25	24	23	22	21	20	19	18	17	16
RESERVED															
R/W-X															
15	14	13	12	11	10	9	8	7	6	5	4	3	2	1	0
RESERVED											fftsumdiv				
R/W-X											R/W-0h				

Table 7-241. FFTSUMDIV Register Field Descriptions

Bit	Field	Type	Reset	Description
31-5	RESERVED	R/W	X	
4-0	fftsumdiv	R/W	0h	Right-shifting for Sum statistic: This register specifies the number of bits to right-shift the sum statistic before it is written to destination memory. The internal sum statistic register is 36-bits wide (allowing 12 bits of MSB growth of the 24-bit data path), but this statistics value needs to be scaled down to 24 bits to match the data path width going to the Output Formatter. This register specifies how many LSBs to drop to convert the sum statistics to 24-bit value.

Copyright © 2025 Texas Instruments Incorporated

7.4.13.1.138 MAX2D_OFFSET_DIM1 Register (Offset = 5B8h) [Reset = X]

MAX2D_OFFSET_DIM1 is shown in the figure and described in the table.

Return to the Summary Table.

Figure 7-275. MAX2D_OFFSET_DIM1 Register

31	30	29	28	27	26	25	24	23	22	21	20	19	18	17	16	15	14	13	12	11	10	9	8	7	6	5	4	3	2	1	0
RESERVED								max2d_offset_dim1																							
R/W-X								R/W-0h																							

Table 7-242. MAX2D_OFFSET_DIM1 Register Field Descriptions

Bit	Field	Type	Reset	Description
31-24	RESERVED	R/W	X	
23-0	max2d_offset_dim1	R/W	0h	Offset to be added to dimension 1 Maxima results. This offset will be applied to all the maxima results in the iteration dimension. Needs to be configured to 0 in case no offset is required.

Copyright © 2025 Texas Instruments Incorporated

7.4.13.1.139 MAX2D_OFFSET_DIM2 Register (Offset = 5BCh) [Reset = X]

MAX2D_OFFSET_DIM2 is shown in the figure and described in the table.

Return to the Summary Table.

Figure 7-276. MAX2D_OFFSET_DIM2 Register

31	30	29	28	27	26	25	24	23	22	21	20	19	18	17	16	15	14	13	12	11	10	9	8	7	6	5	4	3	2	1	0
RESERVED								max2d_offset_dim2																							
R/W-X								R/W-0h																							

Table 7-243. MAX2D_OFFSET_DIM2 Register Field Descriptions

Bit	Field	Type	Reset	Description
31-24	RESERVED	R/W	X	
23-0	max2d_offset_dim2	R/W	0h	Offset to be added to dimension 2 Maxima results. This offset will be applied to all the maxima results in the sample dimension. Needs to be configured to 0 in case no offset is required.

Copyright © 2025 Texas Instruments Incorporated

7.4.13.1.140 CDF_CNT_THRESH Register (Offset = 5C0h) [Reset = X]

CDF_CNT_THRESH is shown in the figure and described in the table.

Return to the Summary Table.

Figure 7-277. CDF_CNT_THRESH Register

31	30	29	28	27	26	25	24	23	22	21	20	19	18	17	16
RESERVED															
R/W-X															
15	14	13	12	11	10	9	8	7	6	5	4	3	2	1	0
RESERVED				cdf_cnt_thresh											
R/W-X				R/W-0h											

Table 7-244. CDF_CNT_THRESH Register Field Descriptions

Bit	Field	Type	Reset	Description
31-12	RESERVED	R/W	X	
11-0	cdf_cnt_thresh	R/W	0h	This register is applicable in CDF_CNT_THRESH mode of operation. CDF is computed over the histogram till the value of the CDF just exceeds the CDF_CNT_THRESH specified by the user. This register can take values from 0 to 1023.

Copyright © 2025 Texas Instruments Incorporated

7.4.13.1.141 STATS_RESERVED_1 Register (Offset = 5C4h) [Reset = 0h]

STATS_RESERVED_1 is shown in the figure and described in the table.

Return to the Summary Table.

Figure 7-278. STATS_RESERVED_1 Register

31	30	29	28	27	26	25	24	23	22	21	20	19	18	17	16	15	14	13	12	11	10	9	8	7	6	5	4	3	2	1	0
RESERVED																															
R/W-0h																															

Table 7-245. STATS_RESERVED_1 Register Field Descriptions

Bit	Field	Type	Reset	Description
31-0	RESERVED	R/W	0h	Future use

Copyright © 2025 Texas Instruments Incorporated

7.4.13.1.142 STATS_RESERVED_2 Register (Offset = 5C8h) [Reset = 0h]

STATS_RESERVED_2 is shown in the figure and described in the table.

Return to the Summary Table.

Figure 7-279. STATS_RESERVED_2 Register

31	30	29	28	27	26	25	24	23	22	21	20	19	18	17	16	15	14	13	12	11	10	9	8	7	6	5	4	3	2	1	0
RESERVED																															
R/W-0h																															

Table 7-246. STATS_RESERVED_2 Register Field Descriptions

Bit	Field	Type	Reset	Description
31-0	RESERVED	R/W	0h	Future use

Copyright © 2025 Texas Instruments Incorporated

7.4.13.1.143 STATS_RESERVED_3 Register (Offset = 5CCh) [Reset = 0h]

STATS_RESERVED_3 is shown in the figure and described in the table.

Return to the Summary Table.

Figure 7-280. STATS_RESERVED_3 Register

31	30	29	28	27	26	25	24	23	22	21	20	19	18	17	16	15	14	13	12	11	10	9	8	7	6	5	4	3	2	1	0
RESERVED																															
R/W-0h																															

Table 7-247. STATS_RESERVED_3 Register Field Descriptions

Bit	Field	Type	Reset	Description
31-0	RESERVED	R/W	0h	Future use

Copyright © 2025 Texas Instruments Incorporated

7.4.13.1.144 STATS_RESERVED_4 Register (Offset = 5D0h) [Reset = 0h]

STATS_RESERVED_4 is shown in the figure and described in the table.

Return to the Summary Table.

Figure 7-281. STATS_RESERVED_4 Register

31	30	29	28	27	26	25	24	23	22	21	20	19	18	17	16	15	14	13	12	11	10	9	8	7	6	5	4	3	2	1	0
RESERVED																															
R/W-0h																															

Table 7-248. STATS_RESERVED_4 Register Field Descriptions

Bit	Field	Type	Reset	Description
31-0	RESERVED	R/W	0h	Future use

Copyright © 2025 Texas Instruments Incorporated

7.4.13.1.145 STATS_RESERVED_5 Register (Offset = 5D4h) [Reset = 0h]

STATS_RESERVED_5 is shown in the figure and described in the table.

Return to the Summary Table.

Figure 7-282. STATS_RESERVED_5 Register

31	30	29	28	27	26	25	24	23	22	21	20	19	18	17	16	15	14	13	12	11	10	9	8	7	6	5	4	3	2	1	0
RESERVED																															
R/W-0h																															

Table 7-249. STATS_RESERVED_5 Register Field Descriptions

Bit	Field	Type	Reset	Description
31-0	RESERVED	R/W	0h	Future use

Copyright © 2025 Texas Instruments Incorporated

7.4.13.1.146 CFAR_PEAKCNT Register (Offset = 5D8h) [Reset = X]

CFAR_PEAKCNT is shown in the figure and described in the table.

Return to the Summary Table.

Figure 7-283. CFAR_PEAKCNT Register

31	30	29	28	27	26	25	24	23	22	21	20	19	18	17	16	15	14	13	12	11	10	9	8	7	6	5	4	3	2	1	0
RESERVED																				cfar_peakcnt											
R-X																				R-0h											

Table 7-250. CFAR_PEAKCNT Register Field Descriptions

Bit	Field	Type	Reset	Description
31-12	RESERVED	R	X	
11-0	cfar_peakcnt	R	0h	CFAR detected peak count: This is a read-only register that contains the number of detected peaks that are logged in the destination memory, when CFAR Engine is configured in Detected Peaks List mode. In the Detected Peaks List mode, since only the detected peaks are logged in the destination memory, this read-only register provides the number of detected peaks that are logged to the main processor, so that the main processor can determine how many entries to read from the destination memory.

Copyright © 2025 Texas Instruments Incorporated

7.4.13.1.147 CFAR_DET_THR Register (Offset = 5DCh) [Reset = X]

CFAR_DET_THR is shown in the figure and described in the table.

Return to the Summary Table.

Figure 7-284. CFAR_DET_THR Register

31	30	29	28	27	26	25	24	23	22	21	20	19	18	17	16	15	14	13	12	11	10	9	8	7	6	5	4	3	2	1	0
RESERVED								cfar_det_thr																							
R/W-X								R/W-0h																							

Table 7-251. CFAR_DET_THR Register Field Descriptions

Bit	Field	Type	Reset	Description
31-24	RESERVED	R/W	X	
23-0	cfar_det_thr	R/W	0h	To be added

Copyright © 2025 Texas Instruments Incorporated

7.4.13.1.148 CFAR_TEST_REG Register (Offset = 5E0h) [Reset = X]

CFAR_TEST_REG is shown in the figure and described in the table.

Return to the Summary Table.

Figure 7-285. CFAR_TEST_REG Register

31	30	29	28	27	26	25	24	23	22	21	20	19	18	17	16	15	14	13	12	11	10	9	8	7	6	5	4	3	2	1	0
RESERVED								cfar_test_reg																							
R/W-X								R/W-0h																							

Table 7-252. CFAR_TEST_REG Register Field Descriptions

Bit	Field	Type	Reset	Description
31-24	RESERVED	R/W	X	
23-0	cfar_test_reg	R/W	0h	TI Reserved. Do not touch

Copyright © 2025 Texas Instruments Incorporated

7.4.13.1.149 CFAR_THRESH Register (Offset = 5E4h) [Reset = X]

CFAR_THRESH is shown in the figure and described in the table.

Return to the Summary Table.

Figure 7-286. CFAR_THRESH Register

31	30	29	28	27	26	25	24	23	22	21	20	19	18	17	16	15	14	13	12	11	10	9	8	7	6	5	4	3	2	1	0
RESERVED														cfar_thresh																	
R/W-X														R/W-0h																	

Table 7-253. CFAR_THRESH Register Field Descriptions

Bit	Field	Type	Reset	Description
31-18	RESERVED	R/W	X	
17-0	cfar_thresh	R/W	0h	Threshold scale factor: This register is used to specify the threshold scale factor. This value is used to either multiply or add to the surrounding noise average to determine the threshold used for detection of the present cell under test. If logarithmic CFAR mode is disabled (in magnitude or magnitude-squared mode), then the register value is multiplied with the surrounding noise average to determine the threshold, else it is added to the surrounding noise average. In the former case, this 18-bit register is interpreted as a 14.4 value. In the latter case (logarithmic mode), the 18-bit register is interpreted as a 7.11 value.

Copyright © 2025 Texas Instruments Incorporated

7.4.13.1.150 CFAR_RESERVED_1 Register (Offset = 5E8h) [Reset = 0h]

CFAR_RESERVED_1 is shown in the figure and described in the table.

Return to the Summary Table.

Figure 7-287. CFAR_RESERVED_1 Register

31	30	29	28	27	26	25	24	23	22	21	20	19	18	17	16	15	14	13	12	11	10	9	8	7	6	5	4	3	2	1	0
RESERVED																															
R/W-0h																															

Table 7-254. CFAR_RESERVED_1 Register Field Descriptions

Bit	Field	Type	Reset	Description
31-0	RESERVED	R/W	0h	Future use

Copyright © 2025 Texas Instruments Incorporated

7.4.13.1.151 CFAR_RESERVED_2 Register (Offset = 5ECh) [Reset = 0h]

CFAR_RESERVED_2 is shown in the figure and described in the table.

Return to the Summary Table.

Figure 7-288. CFAR_RESERVED_2 Register

31	30	29	28	27	26	25	24	23	22	21	20	19	18	17	16	15	14	13	12	11	10	9	8	7	6	5	4	3	2	1	0
RESERVED																															
R/W-0h																															

Table 7-255. CFAR_RESERVED_2 Register Field Descriptions

Bit	Field	Type	Reset	Description
31-0	RESERVED	R/W	0h	Future use

Copyright © 2025 Texas Instruments Incorporated

7.4.13.1.152 CFAR_RESERVED_3 Register (Offset = 5F0h) [Reset = 0h]

CFAR_RESERVED_3 is shown in the figure and described in the table.

Return to the Summary Table.

Figure 7-289. CFAR_RESERVED_3 Register

31	30	29	28	27	26	25	24	23	22	21	20	19	18	17	16	15	14	13	12	11	10	9	8	7	6	5	4	3	2	1	0
RESERVED																															
R/W-0h																															

Table 7-256. CFAR_RESERVED_3 Register Field Descriptions

Bit	Field	Type	Reset	Description
31-0	RESERVED	R/W	0h	Future use

Copyright © 2025 Texas Instruments Incorporated

7.4.13.1.153 CFAR_RESERVED_4 Register (Offset = 5F4h) [Reset = 0h]

CFAR_RESERVED_4 is shown in the figure and described in the table.

Return to the Summary Table.

Figure 7-290. CFAR_RESERVED_4 Register

31	30	29	28	27	26	25	24	23	22	21	20	19	18	17	16	15	14	13	12	11	10	9	8	7	6	5	4	3	2	1	0
RESERVED																															
R/W-0h																															

Table 7-257. CFAR_RESERVED_4 Register Field Descriptions

Bit	Field	Type	Reset	Description
31-0	RESERVED	R/W	0h	Future use

Copyright © 2025 Texas Instruments Incorporated

7.4.13.1.154 CMP_EGE_K0123 Register (Offset = 5F8h) [Reset = X]

CMP_EGE_K0123 is shown in the figure and described in the table.

Return to the Summary Table.

Figure 7-291. CMP_EGE_K0123 Register

31	30	29	28	27	26	25	24	23	22	21	20	19	18	17	16
RESERVED			cmp_ege_k3					RESERVED			cmp_ege_k2				
R/W-X			R/W-0h					R/W-X			R/W-0h				
15	14	13	12	11	10	9	8	7	6	5	4	3	2	1	0
RESERVED			cmp_ege_k1					RESERVED			cmp_ege_k0				
R/W-X			R/W-0h					R/W-X			R/W-0h				

Table 7-258. CMP_EGE_K0123 Register Field Descriptions

Bit	Field	Type	Reset	Description
31-29	RESERVED	R/W	X	
28-24	cmp_ege_k3	R/W	0h	3th K-param value should be loaded here which would be used in the First-pass of EGE Compression
23-21	RESERVED	R/W	X	
20-16	cmp_ege_k2	R/W	0h	2th K-param value should be loaded here which would be used in the First-pass of EGE Compression
15-13	RESERVED	R/W	X	
12-8	cmp_ege_k1	R/W	0h	1th K-param value should be loaded here which would be used in the First-pass of EGE Compression
7-5	RESERVED	R/W	X	
4-0	cmp_ege_k0	R/W	0h	0th K-param value should be loaded here which would be used in the First-pass of EGE Compression

Copyright © 2025 Texas Instruments Incorporated

7.4.13.1.155 CMP_EGE_K4567 Register (Offset = 5FCh) [Reset = X]

CMP_EGE_K4567 is shown in the figure and described in the table.

Return to the Summary Table.

Figure 7-292. CMP_EGE_K4567 Register

31	30	29	28	27	26	25	24	23	22	21	20	19	18	17	16
RESERVED			cmp_ege_k7					RESERVED			cmp_ege_k6				
R/W-X			R/W-0h					R/W-X			R/W-0h				
15	14	13	12	11	10	9	8	7	6	5	4	3	2	1	0
RESERVED			cmp_ege_k5					RESERVED			cmp_ege_k4				
R/W-X			R/W-0h					R/W-X			R/W-0h				

Table 7-259. CMP_EGE_K4567 Register Field Descriptions

Bit	Field	Type	Reset	Description
31-29	RESERVED	R/W	X	
28-24	cmp_ege_k7	R/W	0h	7th K-param value should be loaded here which would be used in the First-pass of EGE Compression
23-21	RESERVED	R/W	X	
20-16	cmp_ege_k6	R/W	0h	6th K-param value should be loaded here which would be used in the First-pass of EGE Compression
15-13	RESERVED	R/W	X	
12-8	cmp_ege_k5	R/W	0h	5th K-param value should be loaded here which would be used in the First-pass of EGE Compression
7-5	RESERVED	R/W	X	
4-0	cmp_ege_k4	R/W	0h	4th K-param value should be loaded here which would be used in the First-pass of EGE Compression

Copyright © 2025 Texas Instruments Incorporated

7.4.13.1.156 MEM_INIT_START Register (Offset = 600h) [Reset = X]

MEM_INIT_START is shown in the figure and described in the table.

Return to the Summary Table.

Figure 7-293. MEM_INIT_START Register

31	30	29	28	27	26	25	24
RESERVED							
R/W-X							
23	22	21	20	19	18	17	16
RESERVED							
R/W-X							
15	14	13	12	11	10	9	8
RESERVED	hist_odd_ram	hist_even_ram	per_iter_max_val_ram	per_sample_max_val_odd_ram	per_sample_max_val_even_ram	window_ram	param_ram
R/W-X	R/W-0h	R/W-0h	R/W-0h	R/W-0h	R/W-0h	R/W-0h	R/W-0h
7	6	5	4	3	2	1	0
dmem7	dmem6	dmem5	dmem4	dmem3	dmem2	dmem1	dmem0
R/W-0h	R/W-0h	R/W-0h	R/W-0h	R/W-0h	R/W-0h	R/W-0h	R/W-0h

Table 7-260. MEM_INIT_START Register Field Descriptions

Bit	Field	Type	Reset	Description
31-15	RESERVED	R/W	X	
14	hist_odd_ram	R/W	0h	writing 1'b1 would start the memory initialization for the Histogram memory 2 It s a self clearing bit
13	hist_even_ram	R/W	0h	writing 1'b1 would start the memory initialization for the Histogram memory 1 It s a self clearing bit
12	per_iter_max_val_ram	R/W	0h	writing 1'b1 would start the memory initialization for the 2D MAX per iteration RAM It s a self clearing bit
11	per_sample_max_val_odd_ram	R/W	0h	writing 1'b1 would start the memory initialization for the 2D MAX per sample RAM 2 It s a self clearing bit
10	per_sample_max_val_even_ram	R/W	0h	writing 1'b1 would start the memory initialization for the 2D MAX per sample RAM 1 It s a self clearing bit
9	window_ram	R/W	0h	writing 1'b1 would start the memory initialization for the window memory It s a self clearing bit
8	param_ram	R/W	0h	writing 1'b1 would start the memory initialization for the Param memory It s a self clearing bit
7	dmem7	R/W	0h	writing 1'b1 would start the memory initialization for the DMEM7 It s a self clearing bit
6	dmem6	R/W	0h	writing 1'b1 would start the memory initialization for the DMEM6 It s a self clearing bit
5	dmem5	R/W	0h	writing 1'b1 would start the memory initialization for the DMEM5 It s a self clearing bit
4	dmem4	R/W	0h	writing 1'b1 would start the memory initialization for the DMEM4 It s a self clearing bit
3	dmem3	R/W	0h	writing 1'b1 would start the memory initialization for the DMEM3 It s a self clearing bit
2	dmem2	R/W	0h	writing 1'b1 would start the memory initialization for the DMEM2 It s a self clearing bit
1	dmem1	R/W	0h	writing 1'b1 would start the memory initialization for the DMEM1. It s a self clearing bit

Copyright © 2025 Texas Instruments Incorporated

Table 7-260. MEM_INIT_START Register Field Descriptions (continued)

Bit	Field	Type	Reset	Description
0	dmem0	R/W	0h	writing 1'b1 would start the memory initialization for the DMEM0 It s a self clearing bit

Copyright © 2025 Texas Instruments Incorporated

7.4.13.1.157 MEM_INIT_DONE Register (Offset = 604h) [Reset = X]

MEM_INIT_DONE is shown in the figure and described in the table.

Return to the Summary Table.

Figure 7-294. MEM_INIT_DONE Register

31	30	29	28	27	26	25	24
RESERVED							
R/W-X							
23	22	21	20	19	18	17	16
RESERVED							
R/W-X							
15	14	13	12	11	10	9	8
RESERVED	hist_odd_ram	hist_even_ram	per_iteration_max_val_ram	per_sample_max_val_odd_ram	per_sample_max_val_even_ram	window_ram	param_ram
R/W-X	R/W-0h	R/W-0h	R/W-0h	R/W-0h	R/W-0h	R/W-0h	R/W-0h
7	6	5	4	3	2	1	0
dmem7	dmem6	dmem5	dmem4	dmem3	dmem2	dmem1	dmem0
R/W-0h	R/W-0h	R/W-0h	R/W-0h	R/W-0h	R/W-0h	R/W-0h	R/W-0h

Table 7-261. MEM_INIT_DONE Register Field Descriptions

Bit	Field	Type	Reset	Description
31-15	RESERVED	R/W	X	
14	hist_odd_ram	R/W	0h	Will be 1'b1 after cmpletion of memory initialization for hist_odd_ram
13	hist_even_ram	R/W	0h	Will be 1'b1 after cmpletion of memory initialization for hist_even_ram
12	per_iteration_max_val_ram	R/W	0h	Will be 1'b1 after cmpletion of memory initialization for per_iteration_max_val_ram
11	per_sample_max_val_odd_ram	R/W	0h	Will be 1'b1 after cmpletion of memory initialization for per_sample_max_val_odd_ram
10	per_sample_max_val_even_ram	R/W	0h	Will be 1'b1 after cmpletion of memory initialization for per_sample_max_val_even_ram
9	window_ram	R/W	0h	Will be 1'b1 after cmpletion of memory initialization for window_ram
8	param_ram	R/W	0h	Will be 1'b1 after cmpletion of memory initialization for param_ram
7	dmem7	R/W	0h	Will be 1'b1 after cmpletion of memory initialization for dmem7
6	dmem6	R/W	0h	Will be 1'b1 after cmpletion of memory initialization for dmem6
5	dmem5	R/W	0h	Will be 1'b1 after cmpletion of memory initialization for dmem5
4	dmem4	R/W	0h	Will be 1'b1 after cmpletion of memory initialization for dmem4
3	dmem3	R/W	0h	Will be 1'b1 after cmpletion of memory initialization for dmem3
2	dmem2	R/W	0h	Will be 1'b1 after cmpletion of memory initialization for dmem2
1	dmem1	R/W	0h	Will be 1'b1 after cmpletion of memory initialization for dmem1
0	dmem0	R/W	0h	Will be 1'b1 after cmpletion of memory initialization for dmem0

Copyright © 2025 Texas Instruments Incorporated

7.4.13.1.158 MEM_INIT_STATUS Register (Offset = 608h) [Reset = X]

MEM_INIT_STATUS is shown in the figure and described in the table.

Return to the Summary Table.

Figure 7-295. MEM_INIT_STATUS Register

31	30	29	28	27	26	25	24
RESERVED							
R-X							
23	22	21	20	19	18	17	16
RESERVED							
R-X							
15	14	13	12	11	10	9	8
RESERVED	hist_odd_ram	hist_even_ram	per_iteration_max_val_ram	per_sample_max_val_odd_ram	per_sample_max_val_even_ram	window_ram	param_ram
R-X	R-0h	R-0h	R-0h	R-0h	R-0h	R-0h	R-0h
7	6	5	4	3	2	1	0
dmem7	dmem6	dmem5	dmem4	dmem3	dmem2	dmem1	dmem0
R-0h	R-0h	R-0h	R-0h	R-0h	R-0h	R-0h	R-0h

Table 7-262. MEM_INIT_STATUS Register Field Descriptions

Bit	Field	Type	Reset	Description
31-15	RESERVED	R	X	
14	hist_odd_ram	R	0h	Will be 1'b1 during memory initialization for hist_odd_ram
13	hist_even_ram	R	0h	Will be 1'b1 during memory initialization for hist_even_ram
12	per_iteration_max_val_ram	R	0h	Will be 1'b1 during memory initialization for per_iteration_max_val_ram
11	per_sample_max_val_odd_ram	R	0h	Will be 1'b1 during memory initialization for per_sample_max_val_odd_ram
10	per_sample_max_val_even_ram	R	0h	Will be 1'b1 during memory initialization for per_sample_max_val_even_ram
9	window_ram	R	0h	Will be 1'b1 during memory initialization for window_ram
8	param_ram	R	0h	Will be 1'b1 during memory initialization for param_ram
7	dmem7	R	0h	Will be 1'b1 during memory initialization for dmem7
6	dmem6	R	0h	Will be 1'b1 during memory initialization for dmem6
5	dmem5	R	0h	Will be 1'b1 during memory initialization for dmem5
4	dmem4	R	0h	Will be 1'b1 during memory initialization for dmem4
3	dmem3	R	0h	Will be 1'b1 during memory initialization for dmem3
2	dmem2	R	0h	Will be 1'b1 during memory initialization for dmem2
1	dmem1	R	0h	Will be 1'b1 during memory initialization for dmem1
0	dmem0	R	0h	Will be 1'b1 during memory initialization for dmem0

Copyright © 2025 Texas Instruments Incorporated

7.4.13.1.159 LM_THRESH_VAL Register (Offset = 60Ch) [Reset = 0h]

LM_THRESH_VAL is shown in the figure and described in the table.

Return to the Summary Table.

Figure 7-296. LM_THRESH_VAL Register

31	30	29	28	27	26	25	24	23	22	21	20	19	18	17	16	15	14	13	12	11	10	9	8	7	6	5	4	3	2	1	0
dimc_thresh_val																dimb_thresh_val															
R/W-0h																R/W-0h															

Table 7-263. LM_THRESH_VAL Register Field Descriptions

Bit	Field	Type	Reset	Description
31-16	dimc_thresh_val	R/W	0h	Threshold value configured for Dimension C
15-0	dimb_thresh_val	R/W	0h	Threshold value configured for Dimension B

Copyright © 2025 Texas Instruments Incorporated

7.4.13.1.160 LM_2DSTATS_BASE_ADDR Register (Offset = 610h) [Reset = X]

LM_2DSTATS_BASE_ADDR is shown in the figure and described in the table.

Return to the Summary Table.

Figure 7-297. LM_2DSTATS_BASE_ADDR Register

31	30	29	28	27	26	25	24	23	22	21	20	19	18	17	16
RESERVED				base_addr_dimc											
R/W-X				R/W-0h											
15	14	13	12	11	10	9	8	7	6	5	4	3	2	1	0
RESERVED				base_addr_dimb											
R/W-X				R/W-0h											

Table 7-264. LM_2DSTATS_BASE_ADDR Register Field Descriptions

Bit	Field	Type	Reset	Description
31-28	RESERVED	R/W	X	
27-16	base_addr_dimc	R/W	0h	Base Address in Stats RAM for the Threshold values corresponding to dimension C
15-12	RESERVED	R/W	X	
11-0	base_addr_dimb	R/W	0h	Base Address in Stats RAM for the Threshold values corresponding to dimension B

Copyright © 2025 Texas Instruments Incorporated

7.4.13.1.161 HWA_SAFETY_EN Register (Offset = 614h) [Reset = X]

HWA_SAFETY_EN is shown in the figure and described in the table.

Return to the Summary Table.

Figure 7-298. HWA_SAFETY_EN Register

31	30	29	28	27	26	25	24
RESERVED							
R/W-X							
23	22	21	20	19	18	17	16
RESERVED							
R/W-X							
15	14	13	12	11	10	9	8
RESERVED							
R/W-X							
7	6	5	4	3	2	1	0
RESERVED				cfg_dmem_parity_en	cfg_window_ram_parity_en	cfg_fsm_lockstep_inv_en	cfg_fsm_lockstep_en
R/W-X				R/W-0h	R/W-0h	R/W-0h	R/W-0h

Table 7-265. HWA_SAFETY_EN Register Field Descriptions

Bit	Field	Type	Reset	Description
31-4	RESERVED	R/W	X	
3	cfg_dmem_parity_en	R/W	0h	Writing 1'b1 would enable the parity chekcer for the 8 DMEM memories
2	cfg_window_ram_parity_en	R/W	0h	Writing 1'b1 enables parity for windowing RAM
1	cfg_fsm_lockstep_inv_en	R/W	0h	Writing 1'b1 will invert the redundant FSM outputs. This can be used for selftest of FSM lockstep error interrupt. This bit is self clearing bit
0	cfg_fsm_lockstep_en	R/W	0h	Writing 1'b1 would enable the lockstep logic for FSM

Copyright © 2025 Texas Instruments Incorporated

7.4.13.1.162 HWA_SAFETY_ERR_MASK Register (Offset = 618h) [Reset = X]

HWA_SAFETY_ERR_MASK is shown in the figure and described in the table.

Return to the Summary Table.

Figure 7-299. HWA_SAFETY_ERR_MASK Register

31	30	29	28	27	26	25	24
RESERVED							
R/W-X							
23	22	21	20	19	18	17	16
RESERVED							
R/W-X							
15	14	13	12	11	10	9	8
RESERVED						fsm_lockstep	window_ram
R/W-X						R/W-0h	R/W-0h
7	6	5	4	3	2	1	0
dmem7	dmem6	dmem5	dmem4	dmem3	dmem2	dmem1	dmem0
R/W-0h	R/W-0h	R/W-0h	R/W-0h	R/W-0h	R/W-0h	R/W-0h	R/W-0h

Table 7-266. HWA_SAFETY_ERR_MASK Register Field Descriptions

Bit	Field	Type	Reset	Description
31-10	RESERVED	R/W	X	
9	fsm_lockstep	R/W	0h	When 1'b1 : FSM lockstep error is masked 1'b0 : FSM lockstep error is not masked
8	window_ram	R/W	0h	When 1'b1 : window RAM parity error is masked 1'b0 : window RAM parity error is not masked
7	dmem7	R/W	0h	When 1'b1 : DMEM7 parity error is masked 1'b0 : DMEM7 parity error is not masked
6	dmem6	R/W	0h	When 1'b1 : DMEM6 parity error is masked 1'b0 : DMEM6 parity error is not masked
5	dmem5	R/W	0h	When 1'b1 : DMEM5 parity error is masked 1'b0 : DMEM5 parity error is not masked
4	dmem4	R/W	0h	When 1'b1 : DMEM4 parity error is masked 1'b0 : DMEM4 parity error is not masked
3	dmem3	R/W	0h	When 1'b1 : DMEM3 parity error is masked 1'b0 : DMEM3 parity error is not masked
2	dmem2	R/W	0h	When 1'b1 : DMEM2 parity error is masked 1'b0 : DMEM2 parity error is not masked
1	dmem1	R/W	0h	When 1'b1 : DMEM1 parity error is masked 1'b0 : DMEM1 parity error is not masked
0	dmem0	R/W	0h	When 1'b1 : DMEM0 parity error is masked 1'b0 : DMEM0 parity error is not masked

Copyright © 2025 Texas Instruments Incorporated

7.4.13.1.163 HWA_SAFETY_ERR_STATUS Register (Offset = 61Ch) [Reset = X]

HWA_SAFETY_ERR_STATUS is shown in the figure and described in the table.

Return to the Summary Table.

Figure 7-300. HWA_SAFETY_ERR_STATUS Register

31	30	29	28	27	26	25	24
RESERVED							
R/W-X							
23	22	21	20	19	18	17	16
RESERVED							
R/W-X							
15	14	13	12	11	10	9	8
RESERVED						fsm_lockstep	window_ram
R/W-X						R/W-0h	R/W-0h
7	6	5	4	3	2	1	0
dmem7	dmem6	dmem5	dmem4	dmem3	dmem2	dmem1	dmem0
R/W-0h	R/W-0h	R/W-0h	R/W-0h	R/W-0h	R/W-0h	R/W-0h	R/W-0h

Table 7-267. HWA_SAFETY_ERR_STATUS Register Field Descriptions

Bit	Field	Type	Reset	Description
31-10	RESERVED	R/W	X	
9	fsm_lockstep	R/W	0h	Indicates the FSM lockstep error (Masked status)
8	window_ram	R/W	0h	Indicates the parity error in window RAM (Masked status)
7	dmem7	R/W	0h	Indicates the parity error in dmem7 (Masked status)
6	dmem6	R/W	0h	Indicates the parity error in dmem6 (Masked status)
5	dmem5	R/W	0h	Indicates the parity error in dmem5 (Masked status)
4	dmem4	R/W	0h	Indicates the parity error in dmem4 (Masked status)
3	dmem3	R/W	0h	Indicates the parity error in dmem3 (Masked status)
2	dmem2	R/W	0h	Indicates the parity error in dmem2 (Masked status)
1	dmem1	R/W	0h	Indicates the parity error in dmem1 (Masked status)
0	dmem0	R/W	0h	Indicates the parity error in dmem0 (Masked status)

Copyright © 2025 Texas Instruments Incorporated

7.4.13.1.164 HWA_SAFETY_ERR_STATUS_RAW Register (Offset = 620h) [Reset = X]

HWA_SAFETY_ERR_STATUS_RAW is shown in the figure and described in the table.

Return to the Summary Table.

Figure 7-301. HWA_SAFETY_ERR_STATUS_RAW Register

31	30	29	28	27	26	25	24
RESERVED							
R/W-X							
23	22	21	20	19	18	17	16
RESERVED							
R/W-X							
15	14	13	12	11	10	9	8
RESERVED						fsm_lockstep	window_ram
R/W-X						R/W-0h	R/W-0h
7	6	5	4	3	2	1	0
dmem7	dmem6	dmem5	dmem4	dmem3	dmem2	dmem1	dmem0
R/W-0h	R/W-0h	R/W-0h	R/W-0h	R/W-0h	R/W-0h	R/W-0h	R/W-0h

Table 7-268. HWA_SAFETY_ERR_STATUS_RAW Register Field Descriptions

Bit	Field	Type	Reset	Description
31-10	RESERVED	R/W	X	
9	fsm_lockstep	R/W	0h	Indicates the FSM lockstep error (raw status) Set irrespective of HWA_SAFETY_ERR_MASK bit 9
8	window_ram	R/W	0h	Indicates the parity error in window RAM(raw status) Set irrespective of HWA_SAFETY_ERR_MASK bit 8
7	dmem7	R/W	0h	Indicates the parity error in dmem7(raw status) Set irrespective of HWA_SAFETY_ERR_MASK bit 7
6	dmem6	R/W	0h	Indicates the parity error in dmem6(raw status) Set irrespective of HWA_SAFETY_ERR_MASK bit 6
5	dmem5	R/W	0h	Indicates the parity error in dmem5(raw status) Set irrespective of HWA_SAFETY_ERR_MASK bit 5
4	dmem4	R/W	0h	Indicates the parity error in dmem4(raw status) Set irrespective of HWA_SAFETY_ERR_MASK bit 4
3	dmem3	R/W	0h	Indicates the parity error in dmem3(raw status) Set irrespective of HWA_SAFETY_ERR_MASK bit 3
2	dmem2	R/W	0h	Indicates the parity error in dmem2(raw status) Set irrespective of HWA_SAFETY_ERR_MASK bit 2
1	dmem1	R/W	0h	Indicates the parity error in dmem1(raw status) Set irrespective of HWA_SAFETY_ERR_MASK bit 1
0	dmem0	R/W	0h	Indicates the parity error in dmem0(raw status). Set irrespective of HWA_SAFETY_ERR_MASK bit 0

Copyright © 2025 Texas Instruments Incorporated

7.4.13.1.165 HWA_SAFETY_DMEM0_ERR_ADDR Register (Offset = 624h) [Reset = X]

HWA_SAFETY_DMEM0_ERR_ADDR is shown in the figure and described in the table.

Return to the Summary Table.

Figure 7-302. HWA_SAFETY_DMEM0_ERR_ADDR Register

31	30	29	28	27	26	25	24	23	22	21	20	19	18	17	16
RESERVED															
R-X															
15	14	13	12	11	10	9	8	7	6	5	4	3	2	1	0
RESERVED						dmem0_err_addr									
R-X						R-0h									

Table 7-269. HWA_SAFETY_DMEM0_ERR_ADDR Register Field Descriptions

Bit	Field	Type	Reset	Description
31-10	RESERVED	R	X	
9-0	dmem0_err_addr	R	0h	Captures the address where parity error occured for dmem0

Copyright © 2025 Texas Instruments Incorporated

7.4.13.1.166 HWA_SAFETY_DMEM1_ERR_ADDR Register (Offset = 628h) [Reset = X]

HWA_SAFETY_DMEM1_ERR_ADDR is shown in the figure and described in the table.

Return to the Summary Table.

Figure 7-303. HWA_SAFETY_DMEM1_ERR_ADDR Register

31	30	29	28	27	26	25	24	23	22	21	20	19	18	17	16
RESERVED															
R-X															
15	14	13	12	11	10	9	8	7	6	5	4	3	2	1	0
RESERVED						dmem1_err_addr									
R-X						R-0h									

Table 7-270. HWA_SAFETY_DMEM1_ERR_ADDR Register Field Descriptions

Bit	Field	Type	Reset	Description
31-10	RESERVED	R	X	
9-0	dmem1_err_addr	R	0h	Captures the address where parity error occured for dmem1

Copyright © 2025 Texas Instruments Incorporated

7.4.13.1.167 HWA_SAFETY_DMEM2_ERR_ADDR Register (Offset = 62Ch) [Reset = X]

HWA_SAFETY_DMEM2_ERR_ADDR is shown in the figure and described in the table.

Return to the Summary Table.

Figure 7-304. HWA_SAFETY_DMEM2_ERR_ADDR Register

31	30	29	28	27	26	25	24	23	22	21	20	19	18	17	16
RESERVED															
R-X															
15	14	13	12	11	10	9	8	7	6	5	4	3	2	1	0
RESERVED						dmem2_err_addr									
R-X						R-0h									

Table 7-271. HWA_SAFETY_DMEM2_ERR_ADDR Register Field Descriptions

Bit	Field	Type	Reset	Description
31-10	RESERVED	R	X	
9-0	dmem2_err_addr	R	0h	Captures the address where parity error occured for dmem2

Copyright © 2025 Texas Instruments Incorporated

7.4.13.1.168 HWA_SAFETY_DMEM3_ERR_ADDR Register (Offset = 630h) [Reset = X]

HWA_SAFETY_DMEM3_ERR_ADDR is shown in the figure and described in the table.

Return to the Summary Table.

Figure 7-305. HWA_SAFETY_DMEM3_ERR_ADDR Register

31	30	29	28	27	26	25	24	23	22	21	20	19	18	17	16
RESERVED															
R-X															
15	14	13	12	11	10	9	8	7	6	5	4	3	2	1	0
RESERVED						dmem3_err_addr									
R-X						R-0h									

Table 7-272. HWA_SAFETY_DMEM3_ERR_ADDR Register Field Descriptions

Bit	Field	Type	Reset	Description
31-10	RESERVED	R	X	
9-0	dmem3_err_addr	R	0h	Captures the address where parity error occured for dmem3

Copyright © 2025 Texas Instruments Incorporated

7.4.13.1.169 HWA_SAFETY_DMEM4_ERR_ADDR Register (Offset = 634h) [Reset = X]

HWA_SAFETY_DMEM4_ERR_ADDR is shown in the figure and described in the table.

Return to the Summary Table.

Figure 7-306. HWA_SAFETY_DMEM4_ERR_ADDR Register

31	30	29	28	27	26	25	24	23	22	21	20	19	18	17	16
RESERVED															
R-X															
15	14	13	12	11	10	9	8	7	6	5	4	3	2	1	0
RESERVED						dmem4_err_addr									
R-X						R-0h									

Table 7-273. HWA_SAFETY_DMEM4_ERR_ADDR Register Field Descriptions

Bit	Field	Type	Reset	Description
31-10	RESERVED	R	X	
9-0	dmem4_err_addr	R	0h	Captures the address where parity error occured for dmem4

Copyright © 2025 Texas Instruments Incorporated

7.4.13.1.170 HWA_SAFETY_DMEM5_ERR_ADDR Register (Offset = 638h) [Reset = X]

HWA_SAFETY_DMEM5_ERR_ADDR is shown in the figure and described in the table.

Return to the Summary Table.

Figure 7-307. HWA_SAFETY_DMEM5_ERR_ADDR Register

31	30	29	28	27	26	25	24	23	22	21	20	19	18	17	16
RESERVED															
R-X															
15	14	13	12	11	10	9	8	7	6	5	4	3	2	1	0
RESERVED						dmem5_err_addr									
R-X						R-0h									

Table 7-274. HWA_SAFETY_DMEM5_ERR_ADDR Register Field Descriptions

Bit	Field	Type	Reset	Description
31-10	RESERVED	R	X	
9-0	dmem5_err_addr	R	0h	Captures the address where parity error occured for dmem5

Copyright © 2025 Texas Instruments Incorporated

7.4.13.1.171 HWA_SAFETY_DMEM6_ERR_ADDR Register (Offset = 63Ch) [Reset = X]

HWA_SAFETY_DMEM6_ERR_ADDR is shown in the figure and described in the table.

Return to the Summary Table.

Figure 7-308. HWA_SAFETY_DMEM6_ERR_ADDR Register

31	30	29	28	27	26	25	24	23	22	21	20	19	18	17	16
RESERVED															
R-X															
15	14	13	12	11	10	9	8	7	6	5	4	3	2	1	0
RESERVED						dmem6_err_addr									
R-X						R-0h									

Table 7-275. HWA_SAFETY_DMEM6_ERR_ADDR Register Field Descriptions

Bit	Field	Type	Reset	Description
31-10	RESERVED	R	X	
9-0	dmem6_err_addr	R	0h	Captures the address where parity error occured for dmem6

Copyright © 2025 Texas Instruments Incorporated

7.4.13.1.172 HWA_SAFETY_DMEM7_ERR_ADDR Register (Offset = 640h) [Reset = X]

HWA_SAFETY_DMEM7_ERR_ADDR is shown in the figure and described in the table.

Return to the Summary Table.

Figure 7-309. HWA_SAFETY_DMEM7_ERR_ADDR Register

31	30	29	28	27	26	25	24	23	22	21	20	19	18	17	16
RESERVED															
R-X															
15	14	13	12	11	10	9	8	7	6	5	4	3	2	1	0
RESERVED						dmem7_err_addr									
R-X						R-0h									

Table 7-276. HWA_SAFETY_DMEM7_ERR_ADDR Register Field Descriptions

Bit	Field	Type	Reset	Description
31-10	RESERVED	R	X	
9-0	dmem7_err_addr	R	0h	Captures the address where parity error occured for dmem7

Copyright © 2025 Texas Instruments Incorporated

7.4.13.1.173 HWA_SAFETY_WINDOW_RAM_ERR_ADDR Register (Offset = 644h) [Reset = X]

HWA_SAFETY_WINDOW_RAM_ERR_ADDR is shown in the figure and described in the table.

Return to the Summary Table.

Figure 7-310. HWA_SAFETY_WINDOW_RAM_ERR_ADDR Register

31	30	29	28	27	26	25	24	23	22	21	20	19	18	17	16
RESERVED															
R-X															
15	14	13	12	11	10	9	8	7	6	5	4	3	2	1	0
RESERVED					window_ram_err_addr										
R-X					R-0h										

Table 7-277. HWA_SAFETY_WINDOW_RAM_ERR_ADDR Register Field Descriptions

Bit	Field	Type	Reset	Description
31-11	RESERVED	R	X	
10-0	window_ram_err_addr	R	0h	Captures the address where parity error occured for window RAM

Copyright © 2025 Texas Instruments Incorporated

7.4.13.1.174 MEM_ACCESS_ERR_STATUS Register (Offset = 648h) [Reset = X]

MEM_ACCESS_ERR_STATUS is shown in the figure and described in the table.

Return to the Summary Table.

Figure 7-311. MEM_ACCESS_ERR_STATUS Register

31	30	29	28	27	26	25	24
RESERVED							
R/W-X							
23	22	21	20	19	18	17	16
RESERVED							
R/W-X							
15	14	13	12	11	10	9	8
RESERVED							
R/W-X							
7	6	5	4	3	2	1	0
dmem7	dmem6	dmem5	dmem4	dmem3	dmem2	dmem1	dmem0
R/W-0h	R/W-0h	R/W-0h	R/W-0h	R/W-0h	R/W-0h	R/W-0h	R/W-0h

Table 7-278. MEM_ACCESS_ERR_STATUS Register Field Descriptions

Bit	Field	Type	Reset	Description
31-8	RESERVED	R/W	X	
7	dmem7	R/W	0h	Indicates if more than 1 master (DMA,CM4,Accelerator) are trying to access the dmem7 at the same time
6	dmem6	R/W	0h	Indicates if more than 1 master (DMA,CM4,Accelerator) are trying to access the dmem6 at the same time
5	dmem5	R/W	0h	Indicates if more than 1 master (DMA,CM4,Accelerator) are trying to access the dmem5 at the same time
4	dmem4	R/W	0h	Indicates if more than 1 master (DMA,CM4,Accelerator) are trying to access the dmem4 at the same time
3	dmem3	R/W	0h	Indicates if more than 1 master (DMA,CM4,Accelerator) are trying to access the dmem3 at the same time
2	dmem2	R/W	0h	Indicates if more than 1 master (DMA,CM4,Accelerator) are trying to access the dmem2 at the same time
1	dmem1	R/W	0h	Indicates if more than 1 master (DMA,CM4,Accelerator) are trying to access the dmem1 at the same time
0	dmem0	R/W	0h	Indicates if more than 1 master (DMA,CM4,Accelerator) are trying to access the dmem0 at the same time

Copyright © 2025 Texas Instruments Incorporated

7.4.13.1.175 LOOP_CNT Register (Offset = 64Ch) [Reset = X]

LOOP_CNT is shown in the figure and described in the table.

Return to the Summary Table.

Figure 7-312. LOOP_CNT Register

31	30	29	28	27	26	25	24	23	22	21	20	19	18	17	16
RESERVED				loop_cnt_alt											
R-X				R-0h											
15	14	13	12	11	10	9	8	7	6	5	4	3	2	1	0
RESERVED				loop_cnt											
R-X				R-0h											

Table 7-279. LOOP_CNT Register Field Descriptions

Bit	Field	Type	Reset	Description
31-28	RESERVED	R	X	
27-16	loop_cnt_alt	R	0h	Loop count for alternate thread
15-12	RESERVED	R	X	
11-0	loop_cnt	R	0h	Loop count

Copyright © 2025 Texas Instruments Incorporated

7.4.13.1.176 PARAMADDR Register (Offset = 650h) [Reset = X]

PARAMADDR is shown in the figure and described in the table.

Return to the Summary Table.

Figure 7-313. PARAMADDR Register

31	30	29	28	27	26	25	24	23	22	21	20	19	18	17	16
RESERVED															
R-X															
15	14	13	12	11	10	9	8	7	6	5	4	3	2	1	0
RESERVED										paramaddr					
R-X										R-0h					

Table 7-280. PARAMADDR Register Field Descriptions

Bit	Field	Type	Reset	Description
31-6	RESERVED	R	X	
5-0	paramaddr	R	0h	Index of the current parameter set being executed from PARAM RAM .

Copyright © 2025 Texas Instruments Incorporated

7.4.13.1.177 PARAMADDR_CPUINTR0 Register (Offset = 654h) [Reset = X]

PARAMADDR_CPUINTR0 is shown in the figure and described in the table.

Return to the Summary Table.

Figure 7-314. PARAMADDR_CPUINTR0 Register

31	30	29	28	27	26	25	24	23	22	21	20	19	18	17	16
RESERVED															
R-X															
15	14	13	12	11	10	9	8	7	6	5	4	3	2	1	0
RESERVED										paramaddr					
R-X										R-0h					

Table 7-281. PARAMADDR_CPUINTR0 Register Field Descriptions

Bit	Field	Type	Reset	Description
31-6	RESERVED	R	X	
5-0	paramaddr	R	0h	Index of the parameter set when PARAM_DONE_INTR0 is generated

Copyright © 2025 Texas Instruments Incorporated

7.4.13.1.178 PARAMADDR_CPUINTR1 Register (Offset = 658h) [Reset = X]

PARAMADDR_CPUINTR1 is shown in the figure and described in the table.

Return to the Summary Table.

Figure 7-315. PARAMADDR_CPUINTR1 Register

31	30	29	28	27	26	25	24	23	22	21	20	19	18	17	16
RESERVED															
R-X															
15	14	13	12	11	10	9	8	7	6	5	4	3	2	1	0
RESERVED										paramaddr					
R-X										R-0h					

Table 7-282. PARAMADDR_CPUINTR1 Register Field Descriptions

Bit	Field	Type	Reset	Description
31-6	RESERVED	R	X	
5-0	paramaddr	R	0h	Index of the parameter set when PARAM_DONE_INTR1 is generated

Copyright © 2025 Texas Instruments Incorporated

7.4.13.1.179 FSM_STATE Register (Offset = 65Ch) [Reset = X]

FSM_STATE is shown in the figure and described in the table.

Return to the Summary Table.

Figure 7-316. FSM_STATE Register

31	30	29	28	27	26	25	24	23	22	21	20	19	18	17	16
RESERVED															
R-X															
15	14	13	12	11	10	9	8	7	6	5	4	3	2	1	0
RESERVED													fsm_state		
R-X													R-0h		

Table 7-283. FSM_STATE Register Field Descriptions

Bit	Field	Type	Reset	Description
31-3	RESERVED	R	X	
2-0	fsm_state	R	0h	Current state of the state machine

Copyright © 2025 Texas Instruments Incorporated

7.4.13.1.180 SINGLE_STEP_EN Register (Offset = 660h) [Reset = X]

SINGLE_STEP_EN is shown in the figure and described in the table.

Return to the Summary Table.

Figure 7-317. SINGLE_STEP_EN Register

31	30	29	28	27	26	25	24
RESERVED							
R/W-X							
23	22	21	20	19	18	17	16
RESERVED							
R/W-X							
15	14	13	12	11	10	9	8
RESERVED							
R/W-X							
7	6	5	4	3	2	1	0
RESERVED							single_step_en
R/W-X							R/W-0h

Table 7-284. SINGLE_STEP_EN Register Field Descriptions

Bit	Field	Type	Reset	Description
31-1	RESERVED	R/W	X	
0	single_step_en	R/W	0h	Single step enable 1'b1 : the state machine executes one parameter-set at a time and wait for the single step trigger every time

Copyright © 2025 Texas Instruments Incorporated

7.4.13.1.181 SINGLE_STEP_TRIG Register (Offset = 664h) [Reset = X]

SINGLE_STEP_TRIG is shown in the figure and described in the table.

Return to the Summary Table.

Figure 7-318. SINGLE_STEP_TRIG Register

31	30	29	28	27	26	25	24
RESERVED							
R/W-X							
23	22	21	20	19	18	17	16
RESERVED							
R/W-X							
15	14	13	12	11	10	9	8
RESERVED							
R/W-X							
7	6	5	4	3	2	1	0
RESERVED							single_step_trig
R/W-X							R/W-0h

Table 7-285. SINGLE_STEP_TRIG Register Field Descriptions

Bit	Field	Type	Reset	Description
31-1	RESERVED	R/W	X	
0	single_step_trig	R/W	0h	This is a self clearing sofware trigger bit . When single_step_en is 1 , the state machine executes one parameter-set at a time and wait for the single step trigger every time

Copyright © 2025 Texas Instruments Incorporated

7.4.13.1.182 HWA_DMEM_A_BUS_SAFETY_CTRL Register (Offset = 668h) [Reset = X]

HWA_DMEM_A_BUS_SAFETY_CTRL is shown in the figure and described in the table.

Return to the Summary Table.

Figure 7-319. HWA_DMEM_A_BUS_SAFETY_CTRL Register

31	30	29	28	27	26	25	24
RESERVED							
R/W-X							
23	22	21	20	19	18	17	16
type							
R-Fh							
15	14	13	12	11	10	9	8
RESERVED							err_clear
R/W-X							R/W-0h
7	6	5	4	3	2	1	0
RESERVED						enable	
R/W-X						R/W-7h	

Table 7-286. HWA_DMEM_A_BUS_SAFETY_CTRL Register Field Descriptions

Bit	Field	Type	Reset	Description
31-24	RESERVED	R/W	X	
23-16	type	R	Fh	TI Reserved. Do not touch
15-9	RESERVED	R/W	X	
8	err_clear	R/W	0h	Write_pulse bit field: 1'b1: clears the HWA_DMEM_A_BUS_SAFETY_ERR_COMP_ERR
7-3	RESERVED	R/W	X	
2-0	enable	R/W	7h	1'b1: enables safety for HWA_DMEM_A 1'b0: diables safety for HWA_DMEM_A

Copyright © 2025 Texas Instruments Incorporated

7.4.13.1.183 HWA_DMEM_A_BUS_SAFETY_FI Register (Offset = 66Ch) [Reset = X]

HWA_DMEM_A_BUS_SAFETY_FI is shown in the figure and described in the table.

Return to the Summary Table.

Figure 7-320. HWA_DMEM_A_BUS_SAFETY_FI Register

31	30	29	28	27	26	25	24
safe							
R/W-0h							
23	22	21	20	19	18	17	16
main							
R/W-0h							
15	14	13	12	11	10	9	8
data							
R/W-0h							
7	6	5	4	3	2	1	0
RESERVED		ded	sec	global_safe_req	global_main_req	global_safe	global_main
R/W-X		R/W-0h	R/W-0h	R/W-0h	R/W-0h	R/W-0h	R/W-0h

Table 7-287. HWA_DMEM_A_BUS_SAFETY_FI Register Field Descriptions

Bit	Field	Type	Reset	Description
31-24	safe	R/W	0h	Write_pulse bit field: 1'b1: Injects fault on Safe Component ports selected based on phase bit0: command phase bit1: write phase bit2: write status phase bit3: read phase bit4: Continous comparison bit7: Injects faults on phase qualifier.
23-16	main	R/W	0h	Write_pulse bit field: 1'b1: Injects fault on Main Component ports selected based on phase bit0: command phase bit1: write phase bit2: write status phase bit3: read phase bit4: Continous comparison bit7: Injects faults on phase qualifier.
15-8	data	R/W	0h	TI Reserved. Do not touch
7-6	RESERVED	R/W	X	
5	ded	R/W	0h	TI Reserved. Do not touch
4	sec	R/W	0h	TI Reserved. Do not touch
3	global_safe_req	R/W	0h	TI Reserved. Do not touch
2	global_main_req	R/W	0h	TI Reserved. Do not touch
1	global_safe	R/W	0h	Write_pulse bit field: 1'b1: Injects fault on all Safe Component ports.
0	global_main	R/W	0h	Write_pulse bit field: 1'b1: Injects fault on all Main Component ports.

Copyright © 2025 Texas Instruments Incorporated

7.4.13.1.184 HWA_DMEM_A_BUS_SAFETY_ERR Register (Offset = 670h) [Reset = 0h]

HWA_DMEM_A_BUS_SAFETY_ERR is shown in the figure and described in the table.

Return to the Summary Table.

Figure 7-321. HWA_DMEM_A_BUS_SAFETY_ERR Register

31	30	29	28	27	26	25	24	23	22	21	20	19	18	17	16
ded								sec							
R-0h								R-0h							
15	14	13	12	11	10	9	8	7	6	5	4	3	2	1	0
comp_check								comp_err							
R-0h								R-0h							

Table 7-288. HWA_DMEM_A_BUS_SAFETY_ERR Register Field Descriptions

Bit	Field	Type	Reset	Description
31-24	ded	R	0h	TI Reserved. Do not touch
23-16	sec	R	0h	TI Reserved. Do not touch
15-8	comp_check	R	0h	Non zero value indicates compare check error on corresponding phase bit0: command phase bit1: write phase bit2: write status phase bit3: read phase bit4: Continous comparison.
7-0	comp_err	R	0h	Non zero value indicates compare error on corresponding phase bit0: command phase bit1: write phase bit2: write status phase bit3: read phase bit4: Continous comparison.

Copyright © 2025 Texas Instruments Incorporated

7.4.13.1.185 HWA_DMEM_A_BUS_SAFETY_ERR_STAT_DATA0 Register (Offset = 678h) [Reset = X]

HWA_DMEM_A_BUS_SAFETY_ERR_STAT_DATA0 is shown in the figure and described in the table.

Return to the Summary Table.

Figure 7-322. HWA_DMEM_A_BUS_SAFETY_ERR_STAT_DATA0 Register

31	30	29	28	27	26	25	24	23	22	21	20	19	18	17	16	15	14	13	12	11	10	9	8	7	6	5	4	3	2	1	0
RESERVED																d1								d0							
R-X																R-0h								R-0h							

Table 7-289. HWA_DMEM_A_BUS_SAFETY_ERR_STAT_DATA0 Register Field Descriptions

Bit	Field	Type	Reset	Description
31-16	RESERVED	R	X	
15-8	d1	R	0h	TI Reserved. Do not touch
7-0	d0	R	0h	TI Reserved. Do not touch

Copyright © 2025 Texas Instruments Incorporated

7.4.13.1.186 HWA_DMEM_B_BUS_SAFETY_CTRL Register (Offset = 67Ch) [Reset = X]

HWA_DMEM_B_BUS_SAFETY_CTRL is shown in the figure and described in the table.

Return to the Summary Table.

Figure 7-323. HWA_DMEM_B_BUS_SAFETY_CTRL Register

31	30	29	28	27	26	25	24
RESERVED							
R/W-X							
23	22	21	20	19	18	17	16
type							
R-Fh							
15	14	13	12	11	10	9	8
RESERVED							err_clear
R/W-X							R/W-0h
7	6	5	4	3	2	1	0
RESERVED						enable	
R/W-X						R/W-7h	

Table 7-290. HWA_DMEM_B_BUS_SAFETY_CTRL Register Field Descriptions

Bit	Field	Type	Reset	Description
31-24	RESERVED	R/W	X	
23-16	type	R	Fh	TI Reserved. Do not touch
15-9	RESERVED	R/W	X	
8	err_clear	R/W	0h	Write_pulse bit field: 1'b1: clears the HWA_DMEM_B_BUS_SAFETY_ERR_COMP_ERR
7-3	RESERVED	R/W	X	
2-0	enable	R/W	7h	1'b1: enables safety for HWA_DMEM_B 1'b0: diables safety for HWA_DMEM_B

Copyright © 2025 Texas Instruments Incorporated

7.4.13.1.187 HWA_DMEM_B_BUS_SAFETY_FI Register (Offset = 680h) [Reset = X]

HWA_DMEM_B_BUS_SAFETY_FI is shown in the figure and described in the table.

Return to the Summary Table.

Figure 7-324. HWA_DMEM_B_BUS_SAFETY_FI Register

31	30	29	28	27	26	25	24
safe							
R/W-0h							
23	22	21	20	19	18	17	16
main							
R/W-0h							
15	14	13	12	11	10	9	8
data							
R/W-0h							
7	6	5	4	3	2	1	0
RESERVED		ded	sec	global_safe_req	global_main_req	global_safe	global_main
R/W-X		R/W-0h	R/W-0h	R/W-0h	R/W-0h	R/W-0h	R/W-0h

Table 7-291. HWA_DMEM_B_BUS_SAFETY_FI Register Field Descriptions

Bit	Field	Type	Reset	Description
31-24	safe	R/W	0h	Write_pulse bit field: 1'b1: Injects fault on Safe Component ports selected based on phase bit0: command phase bit1: write phase bit2: write status phase bit3: read phase bit4: Continous comparison bit7: Injects faults on phase qualifier.
23-16	main	R/W	0h	Write_pulse bit field: 1'b1: Injects fault on Main Component ports selected based on phase bit0: command phase bit1: write phase bit2: write status phase bit3: read phase bit4: Continous comparison bit7: Injects faults on phase qualifier.
15-8	data	R/W	0h	TI Reserved. Do not touch
7-6	RESERVED	R/W	X	
5	ded	R/W	0h	TI Reserved. Do not touch
4	sec	R/W	0h	TI Reserved. Do not touch
3	global_safe_req	R/W	0h	TI Reserved. Do not touch
2	global_main_req	R/W	0h	TI Reserved. Do not touch
1	global_safe	R/W	0h	Write_pulse bit field: 1'b1: Injects fault on all Safe Component ports.
0	global_main	R/W	0h	Write_pulse bit field: 1'b1: Injects fault on all Main Component ports.

Copyright © 2025 Texas Instruments Incorporated

7.4.13.1.188 HWA_DMEM_B_BUS_SAFETY_ERR Register (Offset = 684h) [Reset = 0h]

HWA_DMEM_B_BUS_SAFETY_ERR is shown in the figure and described in the table.

Return to the Summary Table.

Figure 7-325. HWA_DMEM_B_BUS_SAFETY_ERR Register

31	30	29	28	27	26	25	24	23	22	21	20	19	18	17	16
ded								sec							
R-0h								R-0h							
15	14	13	12	11	10	9	8	7	6	5	4	3	2	1	0
comp_check								comp_err							
R-0h								R-0h							

Table 7-292. HWA_DMEM_B_BUS_SAFETY_ERR Register Field Descriptions

Bit	Field	Type	Reset	Description
31-24	ded	R	0h	TI Reserved. Do not touch
23-16	sec	R	0h	TI Reserved. Do not touch
15-8	comp_check	R	0h	Non zero value indicates compare check error on corresponding phase bit0: command phase bit1: write phase bit2: write status phase bit3: read phase bit4: Continuous comparison.
7-0	comp_err	R	0h	Non zero value indicates compare error on corresponding phase bit0: command phase bit1: write phase bit2: write status phase bit3: read phase bit4: Continuous comparison.

Copyright © 2025 Texas Instruments Incorporated

7.4.13.1.189 HWA_DMEM_B_BUS_SAFETY_ERR_STAT_DATA0 Register (Offset = 68Ch) [Reset = X]

HWA_DMEM_B_BUS_SAFETY_ERR_STAT_DATA0 is shown in the figure and described in the table.

Return to the Summary Table.

Figure 7-326. HWA_DMEM_B_BUS_SAFETY_ERR_STAT_DATA0 Register

31	30	29	28	27	26	25	24	23	22	21	20	19	18	17	16	15	14	13	12	11	10	9	8	7	6	5	4	3	2	1	0
RESERVED																d1								d0							
R-X																R-0h								R-0h							

Table 7-293. HWA_DMEM_B_BUS_SAFETY_ERR_STAT_DATA0 Register Field Descriptions

Bit	Field	Type	Reset	Description
31-16	RESERVED	R	X	
15-8	d1	R	0h	TI Reserved. Do not touch
7-0	d0	R	0h	TI Reserved. Do not touch

Copyright © 2025 Texas Instruments Incorporated

7.4.13.1.190 HW_SPARE_RW0 Register (Offset = FD0h) [Reset = 0h]

HW_SPARE_RW0 is shown in the figure and described in the table.

Return to the Summary Table.

Figure 7-327. HW_SPARE_RW0 Register

31	30	29	28	27	26	25	24	23	22	21	20	19	18	17	16	15	14	13	12	11	10	9	8	7	6	5	4	3	2	1	0
hw_spare_rw0																															
R/W-0h																															

Table 7-294. HW_SPARE_RW0 Register Field Descriptions

Bit	Field	Type	Reset	Description
31-0	hw_spare_rw0	R/W	0h	Reserved for HW R&D

Copyright © 2025 Texas Instruments Incorporated

7.4.13.1.191 HW_SPARE_RW1 Register (Offset = FD4h) [Reset = 0h]

HW_SPARE_RW1 is shown in the figure and described in the table.

Return to the Summary Table.

Figure 7-328. HW_SPARE_RW1 Register

31	30	29	28	27	26	25	24	23	22	21	20	19	18	17	16	15	14	13	12	11	10	9	8	7	6	5	4	3	2	1	0
hw_spare_rw1																															
R/W-0h																															

Table 7-295. HW_SPARE_RW1 Register Field Descriptions

Bit	Field	Type	Reset	Description
31-0	hw_spare_rw1	R/W	0h	Reserved for HW R&D

Copyright © 2025 Texas Instruments Incorporated

7.4.13.1.192 HW_SPARE_RW2 Register (Offset = FD8h) [Reset = 0h]

HW_SPARE_RW2 is shown in the figure and described in the table.

Return to the Summary Table.

Figure 7-329. HW_SPARE_RW2 Register

31	30	29	28	27	26	25	24	23	22	21	20	19	18	17	16	15	14	13	12	11	10	9	8	7	6	5	4	3	2	1	0
hw_spare_rw2																															
R/W-0h																															

Table 7-296. HW_SPARE_RW2 Register Field Descriptions

Bit	Field	Type	Reset	Description
31-0	hw_spare_rw2	R/W	0h	Reserved for HW R&D

Copyright © 2025 Texas Instruments Incorporated

7.4.13.1.193 HW_SPARE_RW3 Register (Offset = FDCh) [Reset = 0h]

HW_SPARE_RW3 is shown in the figure and described in the table.

Return to the Summary Table.

Figure 7-330. HW_SPARE_RW3 Register

31	30	29	28	27	26	25	24	23	22	21	20	19	18	17	16	15	14	13	12	11	10	9	8	7	6	5	4	3	2	1	0
hw_spare_rw3																															
R/W-0h																															

Table 7-297. HW_SPARE_RW3 Register Field Descriptions

Bit	Field	Type	Reset	Description
31-0	hw_spare_rw3	R/W	0h	Reserved for HW R&D

Copyright © 2025 Texas Instruments Incorporated

7.4.13.1.194 HW_SPARE_RO0 Register (Offset = FE0h) [Reset = 0h]

HW_SPARE_RO0 is shown in the figure and described in the table.

Return to the Summary Table.

Figure 7-331. HW_SPARE_RO0 Register

31	30	29	28	27	26	25	24	23	22	21	20	19	18	17	16	15	14	13	12	11	10	9	8	7	6	5	4	3	2	1	0
hw_spare_ro0																															
R-0h																															

Table 7-298. HW_SPARE_RO0 Register Field Descriptions

Bit	Field	Type	Reset	Description
31-0	hw_spare_ro0	R	0h	Reserved for HW R&D

Copyright © 2025 Texas Instruments Incorporated

7.4.13.1.195 HW_SPARE_RO1 Register (Offset = FE4h) [Reset = 0h]

HW_SPARE_RO1 is shown in the figure and described in the table.

Return to the Summary Table.

Figure 7-332. HW_SPARE_RO1 Register

31	30	29	28	27	26	25	24	23	22	21	20	19	18	17	16	15	14	13	12	11	10	9	8	7	6	5	4	3	2	1	0
hw_spare_ro1																															
R-0h																															

Table 7-299. HW_SPARE_RO1 Register Field Descriptions

Bit	Field	Type	Reset	Description
31-0	hw_spare_ro1	R	0h	Reserved for HW R&D

Copyright © 2025 Texas Instruments Incorporated

7.4.13.1.196 HW_SPARE_RO2 Register (Offset = FE8h) [Reset = 0h]

HW_SPARE_RO2 is shown in the figure and described in the table.

Return to the Summary Table.

Figure 7-333. HW_SPARE_RO2 Register

31	30	29	28	27	26	25	24	23	22	21	20	19	18	17	16	15	14	13	12	11	10	9	8	7	6	5	4	3	2	1	0
hw_spare_ro2																															
R-0h																															

Table 7-300. HW_SPARE_RO2 Register Field Descriptions

Bit	Field	Type	Reset	Description
31-0	hw_spare_ro2	R	0h	Reserved for HW R&D

Copyright © 2025 Texas Instruments Incorporated

7.4.13.1.197 HW_SPARE_RO3 Register (Offset = FECh) [Reset = 0h]

HW_SPARE_RO3 is shown in the figure and described in the table.

Return to the Summary Table.

Figure 7-334. HW_SPARE_RO3 Register

31	30	29	28	27	26	25	24	23	22	21	20	19	18	17	16	15	14	13	12	11	10	9	8	7	6	5	4	3	2	1	0
hw_spare_ro3																															
R-0h																															

Table 7-301. HW_SPARE_RO3 Register Field Descriptions

Bit	Field	Type	Reset	Description
31-0	hw_spare_ro3	R	0h	Reserved for HW R&D

Copyright © 2025 Texas Instruments Incorporated

7.4.13.1.198 HW_SPARE_WPH Register (Offset = FF0h) [Reset = 0h]

HW_SPARE_WPH is shown in the figure and described in the table.

Return to the Summary Table.

Figure 7-335. HW_SPARE_WPH Register

31	30	29	28	27	26	25	24	23	22	21	20	19	18	17	16	15	14	13	12	11	10	9	8	7	6	5	4	3	2	1	0
hw_spare_wph																															
R/W-0h																															

Table 7-302. HW_SPARE_WPH Register Field Descriptions

Bit	Field	Type	Reset	Description
31-0	hw_spare_wph	R/W	0h	Reserved for HW R&D

Copyright © 2025 Texas Instruments Incorporated

7.4.13.1.199 HW_SPARE_REC Register (Offset = FF4h) [Reset = 0h]

HW_SPARE_REC is shown in the figure and described in the table.

Return to the Summary Table.

Figure 7-336. HW_SPARE_REC Register

31	30	29	28	27	26	25	24
hw_spare_rec31	hw_spare_rec30	hw_spare_rec29	hw_spare_rec28	hw_spare_rec27	hw_spare_rec26	hw_spare_rec25	hw_spare_rec24
R/W-0h	R/W-0h	R/W-0h	R/W-0h	R/W-0h	R/W-0h	R/W-0h	R/W-0h
23	22	21	20	19	18	17	16
hw_spare_rec23	hw_spare_rec22	hw_spare_rec21	hw_spare_rec20	hw_spare_rec19	hw_spare_rec18	hw_spare_rec17	hw_spare_rec16
R/W-0h	R/W-0h	R/W-0h	R/W-0h	R/W-0h	R/W-0h	R/W-0h	R/W-0h
15	14	13	12	11	10	9	8
hw_spare_rec15	hw_spare_rec14	hw_spare_rec13	hw_spare_rec12	hw_spare_rec11	hw_spare_rec10	hw_spare_rec9	hw_spare_rec8
R/W-0h	R/W-0h	R/W-0h	R/W-0h	R/W-0h	R/W-0h	R/W-0h	R/W-0h
7	6	5	4	3	2	1	0
hw_spare_rec7	hw_spare_rec6	hw_spare_rec5	hw_spare_rec4	hw_spare_rec3	hw_spare_rec2	hw_spare_rec1	hw_spare_rec0
R/W-0h	R/W-0h	R/W-0h	R/W-0h	R/W-0h	R/W-0h	R/W-0h	R/W-0h

Table 7-303. HW_SPARE_REC Register Field Descriptions

Bit	Field	Type	Reset	Description
31	hw_spare_rec31	R/W	0h	Reserved for HW R&D
30	hw_spare_rec30	R/W	0h	Reserved for HW R&D
29	hw_spare_rec29	R/W	0h	Reserved for HW R&D
28	hw_spare_rec28	R/W	0h	Reserved for HW R&D
27	hw_spare_rec27	R/W	0h	Reserved for HW R&D
26	hw_spare_rec26	R/W	0h	Reserved for HW R&D
25	hw_spare_rec25	R/W	0h	Reserved for HW R&D
24	hw_spare_rec24	R/W	0h	Reserved for HW R&D
23	hw_spare_rec23	R/W	0h	Reserved for HW R&D
22	hw_spare_rec22	R/W	0h	Reserved for HW R&D
21	hw_spare_rec21	R/W	0h	Reserved for HW R&D
20	hw_spare_rec20	R/W	0h	Reserved for HW R&D
19	hw_spare_rec19	R/W	0h	Reserved for HW R&D
18	hw_spare_rec18	R/W	0h	Reserved for HW R&D
17	hw_spare_rec17	R/W	0h	Reserved for HW R&D
16	hw_spare_rec16	R/W	0h	Reserved for HW R&D
15	hw_spare_rec15	R/W	0h	Reserved for HW R&D
14	hw_spare_rec14	R/W	0h	Reserved for HW R&D
13	hw_spare_rec13	R/W	0h	Reserved for HW R&D
12	hw_spare_rec12	R/W	0h	Reserved for HW R&D
11	hw_spare_rec11	R/W	0h	Reserved for HW R&D
10	hw_spare_rec10	R/W	0h	Reserved for HW R&D
9	hw_spare_rec9	R/W	0h	Reserved for HW R&D
8	hw_spare_rec8	R/W	0h	Reserved for HW R&D

Copyright © 2025 Texas Instruments Incorporated

Table 7-303. HW_SPARE_REC Register Field Descriptions (continued)

Bit	Field	Type	Reset	Description
7	hw_spare_rec7	R/W	0h	Reserved for HW R&D
6	hw_spare_rec6	R/W	0h	Reserved for HW R&D
5	hw_spare_rec5	R/W	0h	Reserved for HW R&D
4	hw_spare_rec4	R/W	0h	Reserved for HW R&D
3	hw_spare_rec3	R/W	0h	Reserved for HW R&D
2	hw_spare_rec2	R/W	0h	Reserved for HW R&D
1	hw_spare_rec1	R/W	0h	Reserved for HW R&D
0	hw_spare_rec0	R/W	0h	Reserved for HW R&D

Copyright © 2025 Texas Instruments Incorporated

7.4.13.1.200 LOCK0_KICK0 Register (Offset = 1008h) [Reset = 0h]

LOCK0_KICK0 is shown in the figure and described in the table.

Return to the Summary Table.

- KICK0 component

Figure 7-337. LOCK0_KICK0 Register

31	30	29	28	27	26	25	24	23	22	21	20	19	18	17	16	15	14	13	12	11	10	9	8	7	6	5	4	3	2	1	0
LOCK0_kick0																															
R/W-0h																															

Table 7-304. LOCK0_KICK0 Register Field Descriptions

Bit	Field	Type	Reset	Description
31-0	LOCK0_kick0	R/W	0h	- KICK0 component

Copyright © 2025 Texas Instruments Incorporated

7.4.13.1.201 LOCK0_KICK1 Register (Offset = 100Ch) [Reset = 0h]

LOCK0_KICK1 is shown in the figure and described in the table.

Return to the Summary Table.

- KICK1 component

Figure 7-338. LOCK0_KICK1 Register

31	30	29	28	27	26	25	24	23	22	21	20	19	18	17	16	15	14	13	12	11	10	9	8	7	6	5	4	3	2	1	0
LOCK0_kick1																															
R/W-0h																															

Table 7-305. LOCK0_KICK1 Register Field Descriptions

Bit	Field	Type	Reset	Description
31-0	LOCK0_kick1	R/W	0h	- KICK1 component

Copyright © 2025 Texas Instruments Incorporated

7.4.13.1.202 intr_raw_status Register (Offset = 1010h) [Reset = X]

intr_raw_status is shown in the figure and described in the table.

Return to the Summary Table.

Interrupt Raw Status/Set Register

Figure 7-339. intr_raw_status Register

31	30	29	28	27	26	25	24
RESERVED							
R/W-X							
23	22	21	20	19	18	17	16
RESERVED							
R/W-X							
15	14	13	12	11	10	9	8
RESERVED							
R/W-X							
7	6	5	4	3	2	1	0
RESERVED				proxy_err	kick_err	addr_err	prot_err
R/W-X				R/W1S-0h	R/W1S-0h	R/W1S-0h	R/W1S-0h

Table 7-306. intr_raw_status Register Field Descriptions

Bit	Field	Type	Reset	Description
31-4	RESERVED	R/W	X	
3	proxy_err	R/W1S	0h	Proxy0 access violation error. Raw status is read. Write a 1 to set the status. Writing a 0 has no effect.
2	kick_err	R/W1S	0h	Kick access violation error. Raw status is read. Write a 1 to set the status. Writing a 0 has no effect.
1	addr_err	R/W1S	0h	Addressing violation error. Raw status is read. Write a 1 to set the status. Writing a 0 has no effect.
0	prot_err	R/W1S	0h	Protection violation error. Raw status is read. Write a 1 to set the status. Writing a 0 has no effect.

Copyright © 2025 Texas Instruments Incorporated

7.4.13.1.203 intr_enabled_status_clear Register (Offset = 1014h) [Reset = X]

intr_enabled_status_clear is shown in the figure and described in the table.

Return to the Summary Table.

Interrupt Enabled Status/Clear register

Figure 7-340. intr_enabled_status_clear Register

31	30	29	28	27	26	25	24
RESERVED							
R/W-X							
23	22	21	20	19	18	17	16
RESERVED							
R/W-X							
15	14	13	12	11	10	9	8
RESERVED							
R/W-X							
7	6	5	4	3	2	1	0
RESERVED				enabled_proxy_err	enabled_kick_err	enabled_addr_err	enabled_prot_err
R/W-X				R/W1C-0h	R/W1C-0h	R/W1C-0h	R/W1C-0h

Table 7-307. intr_enabled_status_clear Register Field Descriptions

Bit	Field	Type	Reset	Description
31-4	RESERVED	R/W	X	
3	enabled_proxy_err	R/W1C	0h	Proxy0 access violation error. Enabled status is read. Write a 1 to clear the status. Writing a 0 has no effect.
2	enabled_kick_err	R/W1C	0h	Kick access violation error. Enabled status is read. Write a 1 to clear the status. Writing a 0 has no effect.
1	enabled_addr_err	R/W1C	0h	Addressing violation error. Enabled status is read. Write a 1 to clear the status. Writing a 0 has no effect.
0	enabled_prot_err	R/W1C	0h	Protection violation error. Enabled status is read. Write a 1 to clear the status. Writing a 0 has no effect.

Copyright © 2025 Texas Instruments Incorporated

7.4.13.1.204 intr_enable Register (Offset = 1018h) [Reset = X]

intr_enable is shown in the figure and described in the table.

Return to the Summary Table.

Interrupt Enable register

Figure 7-341. intr_enable Register

31	30	29	28	27	26	25	24
RESERVED							
R/W-X							
23	22	21	20	19	18	17	16
RESERVED							
R/W-X							
15	14	13	12	11	10	9	8
RESERVED							
R/W-X							
7	6	5	4	3	2	1	0
RESERVED				proxy_err_en	kick_err_en	addr_err_en	prot_err_en
R/W-X				R/W1S-0h	R/W1S-0h	R/W1S-0h	R/W1S-0h

Table 7-308. intr_enable Register Field Descriptions

Bit	Field	Type	Reset	Description
31-4	RESERVED	R/W	X	
3	proxy_err_en	R/W1S	0h	Proxy0 access violation error enable. Write a 1 to set the enable. Writing a 0 has no effect.
2	kick_err_en	R/W1S	0h	Kick access violation error enable. Write a 1 to set the enable. Writing a 0 has no effect.
1	addr_err_en	R/W1S	0h	Addressing violation error enable. Write a 1 to set the enable. Writing a 0 has no effect.
0	prot_err_en	R/W1S	0h	Protection violation error enable. Write a 1 to set the enable. Writing a 0 has no effect.

Copyright © 2025 Texas Instruments Incorporated

7.4.13.1.205 intr_enable_clear Register (Offset = 101Ch) [Reset = X]

intr_enable_clear is shown in the figure and described in the table.

Return to the Summary Table.

Interrupt Enable Clear register

Figure 7-342. intr_enable_clear Register

31	30	29	28	27	26	25	24
RESERVED							
R/W-X							
23	22	21	20	19	18	17	16
RESERVED							
R/W-X							
15	14	13	12	11	10	9	8
RESERVED							
R/W-X							
7	6	5	4	3	2	1	0
RESERVED				proxy_err_en_clr	kick_err_en_clr	addr_err_en_clr	prot_err_en_clr
R/W-X				R/W1C-0h	R/W1C-0h	R/W1C-0h	R/W1C-0h

Table 7-309. intr_enable_clear Register Field Descriptions

Bit	Field	Type	Reset	Description
31-4	RESERVED	R/W	X	
3	proxy_err_en_clr	R/W1C	0h	Proxy0 access violation error enable clear. Write a 1 to clear the enable. Writing a 0 has no effect.
2	kick_err_en_clr	R/W1C	0h	Kick access violation error enable clear. Write a 1 to clear the enable. Writing a 0 has no effect.
1	addr_err_en_clr	R/W1C	0h	Addressing violation error enable clear. Write a 1 to clear the enable. Writing a 0 has no effect.
0	prot_err_en_clr	R/W1C	0h	Protection violation error enable clear. Write a 1 to clear the enable. Writing a 0 has no effect.

Copyright © 2025 Texas Instruments Incorporated

7.4.13.1.206 eoi Register (Offset = 1020h) [Reset = X]

eoi is shown in the figure and described in the table.

Return to the Summary Table.

EOI register

Figure 7-343. eoi Register

31	30	29	28	27	26	25	24	23	22	21	20	19	18	17	16
RESERVED															
R/W-X															
15	14	13	12	11	10	9	8	7	6	5	4	3	2	1	0
RESERVED								eoi_vector							
R/W-X								R/W-0h							

Table 7-310. eoi Register Field Descriptions

Bit	Field	Type	Reset	Description
31-8	RESERVED	R/W	X	
7-0	eoi_vector	R/W	0h	EOI vector value. Write this with interrupt distribution value in the chip.

Copyright © 2025 Texas Instruments Incorporated

7.4.13.1.207 fault_address Register (Offset = 1024h) [Reset = 0h]

fault_address is shown in the figure and described in the table.

Return to the Summary Table.

Fault Address register

Figure 7-344. fault_address Register

31	30	29	28	27	26	25	24	23	22	21	20	19	18	17	16	15	14	13	12	11	10	9	8	7	6	5	4	3	2	1	0
fault_addr																															
R-0h																															

Table 7-311. fault_address Register Field Descriptions

Bit	Field	Type	Reset	Description
31-0	fault_addr	R	0h	Fault Address.

Copyright © 2025 Texas Instruments Incorporated

7.4.13.1.208 fault_type_status Register (Offset = 1028h) [Reset = X]

fault_type_status is shown in the figure and described in the table.

Return to the Summary Table.

Fault Type Status register

Figure 7-345. fault_type_status Register

31	30	29	28	27	26	25	24
RESERVED							
R-X							
23	22	21	20	19	18	17	16
RESERVED							
R-X							
15	14	13	12	11	10	9	8
RESERVED							
R-X							
7	6	5	4	3	2	1	0
RESERVED	fault_ns	fault_type					
R-X	R-0h	R-0h					

Table 7-312. fault_type_status Register Field Descriptions

Bit	Field	Type	Reset	Description
31-7	RESERVED	R	X	
6	fault_ns	R	0h	Non-secure access.
5-0	fault_type	R	0h	Fault Type 10_0000 = Supervisor read fault - priv = 1 dir = 1 dtype ! = 1 01_0000 = Supervisor write fault - priv = 1 dir = 0 00_1000 = Supervisor execute fault - priv = 1 dir = 1 dtype = 1 00_0100 = User read fault - priv = 0 dir = 1 dtype = 1 00_0010 = User write fault - priv = 0 dir = 0 00_0001 = User execute fault - priv = 0 dir = 1 dtype = 1 00_0000 = No fault

Copyright © 2025 Texas Instruments Incorporated

7.4.13.1.209 fault_attr_status Register (Offset = 102Ch) [Reset = 0h]

fault_attr_status is shown in the figure and described in the table.

Return to the Summary Table.

Fault Attribute Status register

Figure 7-346. fault_attr_status Register

31	30	29	28	27	26	25	24	23	22	21	20	19	18	17	16
fault_xid												fault_routeid			
R-0h												R-0h			
15	14	13	12	11	10	9	8	7	6	5	4	3	2	1	0
fault_routeid								fault_privid							
R-0h								R-0h							

Table 7-313. fault_attr_status Register Field Descriptions

Bit	Field	Type	Reset	Description
31-20	fault_xid	R	0h	XID.
19-8	fault_routeid	R	0h	Route ID.
7-0	fault_privid	R	0h	Privilege ID.

Copyright © 2025 Texas Instruments Incorporated

7.4.13.1.210 fault_clear Register (Offset = 1030h) [Reset = X]

fault_clear is shown in the figure and described in the table.

Return to the Summary Table.

Fault Clear register

Figure 7-347. fault_clear Register

31	30	29	28	27	26	25	24
RESERVED							
W-X							
23	22	21	20	19	18	17	16
RESERVED							
W-X							
15	14	13	12	11	10	9	8
RESERVED							
W-X							
7	6	5	4	3	2	1	0
RESERVED							fault_clr
W-X							W-0h

Table 7-314. fault_clear Register Field Descriptions

Bit	Field	Type	Reset	Description
31-1	RESERVED	W	X	
0	fault_clr	W	0h	Fault clear. Writing a 1 clears the current fault. Writing a 0 has no effect.

Copyright © 2025 Texas Instruments Incorporated

7.4.13.2 DSS_HWA_PARAM Registers

Table 7-315 lists the memory-mapped registers for the DSS_HWA_PARAM registers. All register offset addresses not listed in Table 7-315 should be considered as reserved locations and the register contents should not be modified.

Table 7-315. DSS_HWA_PARAM Registers

Offset	Acronym	Register Name	Section
0h	START		Go
FFCh	END		Go

Complex bit access types are encoded to fit into small table cells. Table 7-316 shows the codes that are used for access types in this section.

Table 7-316. DSS_HWA_PARAM Access Type Codes

Access Type	Code	Description
Read Type		
R	R	Read
Write Type		
W	W	Write
Reset or Default Value		
-n		Value after reset or the default value

Copyright © 2025 Texas Instruments Incorporated

7.4.13.2.1 START Register (Offset = 0h) [Reset = 00000000h]

START is shown in Table 7-317.

Return to the Summary Table.

Table 7-317. START Register Field Descriptions

Bit	Field	Type	Reset	Description
31-0	start	R/W	0h	Start address

Copyright © 2025 Texas Instruments Incorporated

7.4.13.2.2 END Register (Offset = FFCh) [Reset = 00000000h]

END is shown in Table 7-318.

Return to the Summary Table.

Table 7-318. END Register Field Descriptions

Bit	Field	Type	Reset	Description
31-0	end	R/W	0h	End address

Copyright © 2025 Texas Instruments Incorporated

7.4.13.3 DSS_HWA_WINDOW_RAM Registers

Table 7-319 lists the memory-mapped registers for the DSS_HWA_WINDOW_RAM registers. All register offset addresses not listed in Table 7-319 should be considered as reserved locations and the register contents should not be modified.

Table 7-319. DSS_HWA_WINDOW_RAM Registers

Offset	Acronym	Register Name	Section
0h	START		Go
1FFCh	END		Go

Complex bit access types are encoded to fit into small table cells. Table 7-320 shows the codes that are used for access types in this section.

Table 7-320. DSS_HWA_WINDOW_RAM Access Type Codes

Access Type	Code	Description
Read Type		
R	R	Read
Write Type		
W	W	Write
Reset or Default Value		
-n		Value after reset or the default value

Copyright © 2025 Texas Instruments Incorporated

7.4.13.3.1 START Register (Offset = 0h) [Reset = 00000000h]

START is shown in Table 7-321.

Return to the Summary Table.

Table 7-321. START Register Field Descriptions

Bit	Field	Type	Reset	Description
31-0	start	R/W	0h	Start address

Copyright © 2025 Texas Instruments Incorporated

7.4.13.3.2 END Register (Offset = 1FFCh) [Reset = 00000000h]

END is shown in Table 7-322.

Return to the Summary Table.

Table 7-322. END Register Field Descriptions

Bit	Field	Type	Reset	Description
31-0	end	R/W	0h	End address

Copyright © 2025 Texas Instruments Incorporated

7.4.13.4 DSS_HWA_MULT_RAM Registers

Table 7-323 lists the memory-mapped registers for the DSS_HWA_MULT_RAM registers. All register offset addresses not listed in Table 7-323 should be considered as reserved locations and the register contents should not be modified.

Table 7-323. DSS_HWA_MULT_RAM Registers

Offset	Acronym	Register Name	Section
0h	START		Go
1FFCh	END		Go

Complex bit access types are encoded to fit into small table cells. Table 7-324 shows the codes that are used for access types in this section.

Table 7-324. DSS_HWA_MULT_RAM Access Type Codes

Access Type	Code	Description
Read Type		
R	R	Read
Write Type		
W	W	Write
Reset or Default Value		
-n		Value after reset or the default value

Copyright © 2025 Texas Instruments Incorporated

7.4.13.4.1 START Register (Offset = 0h) [Reset = 00000000h]

START is shown in Table 7-325.

Return to the Summary Table.

Table 7-325. START Register Field Descriptions

Bit	Field	Type	Reset	Description
31-0	start	R/W	0h	Start address

Copyright © 2025 Texas Instruments Incorporated

7.4.13.4.2 END Register (Offset = 1FFCh) [Reset = 00000000h]

END is shown in Table 7-326.

Return to the Summary Table.

Table 7-326. END Register Field Descriptions

Bit	Field	Type	Reset	Description
31-0	end	R/W	0h	End address

Copyright © 2025 Texas Instruments Incorporated

7.4.13.5 DSS_HWA_DEROT_RAM Registers

Table 7-327 lists the memory-mapped registers for the DSS_HWA_DEROT_RAM registers. All register offset addresses not listed in Table 7-327 should be considered as reserved locations and the register contents should not be modified.

Table 7-327. DSS_HWA_DEROT_RAM Registers

Offset	Acronym	Register Name	Section
0h	START		Go
FCh	END		Go

Complex bit access types are encoded to fit into small table cells. Table 7-328 shows the codes that are used for access types in this section.

Table 7-328. DSS_HWA_DEROT_RAM Access Type Codes

Access Type	Code	Description
Read Type		
R	R	Read
Write Type		
W	W	Write
Reset or Default Value		
-n		Value after reset or the default value

Copyright © 2025 Texas Instruments Incorporated

7.4.13.5.1 START Register (Offset = 0h) [Reset = 00000000h]

START is shown in Table 7-329.

Return to the Summary Table.

Table 7-329. START Register Field Descriptions

Bit	Field	Type	Reset	Description
31-0	start	R/W	0h	Start address

Copyright © 2025 Texas Instruments Incorporated

7.4.13.5.2 END Register (Offset = FCh) [Reset = 00000000h]

END is shown in Table 7-330.

Return to the Summary Table.

Table 7-330. END Register Field Descriptions

Bit	Field	Type	Reset	Description
31-0	end	R/W	0h	End address

Copyright © 2025 Texas Instruments Incorporated

7.4.13.6 DSS_HWA_SHUFFLE_RAM Registers

Table 7-331 lists the memory-mapped registers for the DSS_HWA_SHUFFLE_RAM registers. All register offset addresses not listed in Table 7-331 should be considered as reserved locations and the register contents should not be modified.

Table 7-331. DSS_HWA_SHUFFLE_RAM Registers

Offset	Acronym	Register Name	Section
0h	START		Go
1FCh	END		Go

Complex bit access types are encoded to fit into small table cells. Table 7-332 shows the codes that are used for access types in this section.

Table 7-332. DSS_HWA_SHUFFLE_RAM Access Type Codes

Access Type	Code	Description
Read Type		
R	R	Read
Write Type		
W	W	Write
Reset or Default Value		
-n		Value after reset or the default value

Copyright © 2025 Texas Instruments Incorporated

7.4.13.6.1 START Register (Offset = 0h) [Reset = 00000000h]

START is shown in Table 7-333.

Return to the Summary Table.

Table 7-333. START Register Field Descriptions

Bit	Field	Type	Reset	Description
31-0	start	R/W	0h	Start address

Copyright © 2025 Texas Instruments Incorporated

7.4.13.6.2 END Register (Offset = 1FCh) [Reset = 00000000h]

END is shown in Table 7-334.

Return to the Summary Table.

Table 7-334. END Register Field Descriptions

Bit	Field	Type	Reset	Description
31-0	end	R/W	0h	End address

Copyright © 2025 Texas Instruments Incorporated

7.4.13.7 DSS_HWA_2DSTAT_ITER_VAL_RAM Registers

Table 7-335 lists the memory-mapped registers for the DSS_HWA_2DSTAT_ITER_VAL_RAM registers. All register offset addresses not listed in Table 7-335 should be considered as reserved locations and the register contents should not be modified.

Table 7-335. DSS_HWA_2DSTAT_ITER_VAL_RAM Registers

Offset	Acronym	Register Name	Section
0h	START		Go
FFCh	END		Go

Complex bit access types are encoded to fit into small table cells. Table 7-336 shows the codes that are used for access types in this section.

Table 7-336. DSS_HWA_2DSTAT_ITER_VAL_RAM Access Type Codes

Access Type	Code	Description
Read Type		
R	R	Read
Write Type		
W	W	Write
Reset or Default Value		
-n		Value after reset or the default value

Copyright © 2025 Texas Instruments Incorporated

7.4.13.7.1 START Register (Offset = 0h) [Reset = 00000000h]

START is shown in Table 7-337.

Return to the Summary Table.

Table 7-337. START Register Field Descriptions

Bit	Field	Type	Reset	Description
31-0	start	R/W	0h	Start address

Copyright © 2025 Texas Instruments Incorporated

7.4.13.7.2 END Register (Offset = FFCh) [Reset = 00000000h]

END is shown in Table 7-338.

Return to the Summary Table.

Table 7-338. END Register Field Descriptions

Bit	Field	Type	Reset	Description
31-0	end	R/W	0h	End address

Copyright © 2025 Texas Instruments Incorporated

7.4.13.8 DSS_HWA_2DSTAT_ITER_IDX_RAM Registers

Table 7-339 lists the memory-mapped registers for the DSS_HWA_2DSTAT_ITER_IDX_RAM registers. All register offset addresses not listed in Table 7-339 should be considered as reserved locations and the register contents should not be modified.

Table 7-339. DSS_HWA_2DSTAT_ITER_IDX_RAM Registers

Offset	Acronym	Register Name	Section
0h	START		Go
7FCh	END		Go

Complex bit access types are encoded to fit into small table cells. Table 7-340 shows the codes that are used for access types in this section.

Table 7-340. DSS_HWA_2DSTAT_ITER_IDX_RAM Access Type Codes

Access Type	Code	Description
Read Type		
R	R	Read
Write Type		
W	W	Write
Reset or Default Value		
-n		Value after reset or the default value

Copyright © 2025 Texas Instruments Incorporated

7.4.13.8.1 START Register (Offset = 0h) [Reset = 00000000h]

START is shown in Table 7-341.

Return to the Summary Table.

Table 7-341. START Register Field Descriptions

Bit	Field	Type	Reset	Description
31-0	start	R/W	0h	Start address

Copyright © 2025 Texas Instruments Incorporated

7.4.13.8.2 END Register (Offset = 7FCh) [Reset = 00000000h]

END is shown in Table 7-342.

Return to the Summary Table.

Table 7-342. END Register Field Descriptions

Bit	Field	Type	Reset	Description
31-0	end	R/W	0h	End address

Copyright © 2025 Texas Instruments Incorporated

7.4.13.9 DSS_HWA_2DSTAT_SMPL_VAL_RAM Registers

Table 7-343 lists the memory-mapped registers for the DSS_HWA_2DSTAT_SMPL_VAL_RAM registers. All register offset addresses not listed in Table 7-343 should be considered as reserved locations and the register contents should not be modified.

Table 7-343. DSS_HWA_2DSTAT_SMPL_VAL_RAM Registers

Offset	Acronym	Register Name	Section
0h	START		Go
3FCh	END		Go

Complex bit access types are encoded to fit into small table cells. Table 7-344 shows the codes that are used for access types in this section.

Table 7-344. DSS_HWA_2DSTAT_SMPL_VAL_RAM Access Type Codes

Access Type	Code	Description
Read Type		
R	R	Read
Write Type		
W	W	Write
Reset or Default Value		
-n		Value after reset or the default value

Copyright © 2025 Texas Instruments Incorporated

7.4.13.9.1 START Register (Offset = 0h) [Reset = 00000000h]

START is shown in Table 7-345.

Return to the Summary Table.

Table 7-345. START Register Field Descriptions

Bit	Field	Type	Reset	Description
31-0	start	R/W	0h	Start address

Copyright © 2025 Texas Instruments Incorporated

7.4.13.9.2 END Register (Offset = 3FCh) [Reset = 00000000h]

END is shown in Table 7-346.

Return to the Summary Table.

Table 7-346. END Register Field Descriptions

Bit	Field	Type	Reset	Description
31-0	end	R/W	0h	End address

Copyright © 2025 Texas Instruments Incorporated

7.4.13.10 DSS_HWA_2DSTAT_SMPL_IDX_RAM Registers

Table 7-347 lists the memory-mapped registers for the DSS_HWA_2DSTAT_SMPL_IDX_RAM registers. All register offset addresses not listed in Table 7-347 should be considered as reserved locations and the register contents should not be modified.

Table 7-347. DSS_HWA_2DSTAT_SMPL_IDX_RAM Registers

Offset	Acronym	Register Name	Section
0h	START		Go
1FCh	END		Go

Complex bit access types are encoded to fit into small table cells. Table 7-348 shows the codes that are used for access types in this section.

Table 7-348. DSS_HWA_2DSTAT_SMPL_IDX_RAM Access Type Codes

Access Type	Code	Description
Read Type		
R	R	Read
Write Type		
W	W	Write
Reset or Default Value		
-n		Value after reset or the default value

Copyright © 2025 Texas Instruments Incorporated

7.4.13.10.1 START Register (Offset = 0h) [Reset = 00000000h]

START is shown in Table 7-349.

Return to the Summary Table.

Table 7-349. START Register Field Descriptions

Bit	Field	Type	Reset	Description
31-0	start	R/W	0h	Start address

Copyright © 2025 Texas Instruments Incorporated

7.4.13.10.2 END Register (Offset = 1FCh) [Reset = 00000000h]

END is shown in Table 7-350.

Return to the Summary Table.

Table 7-350. END Register Field Descriptions

Bit	Field	Type	Reset	Description
31-0	end	R/W	0h	End address

Copyright © 2025 Texas Instruments Incorporated

7.4.13.11 DSS_HWA_HIST_RAM Registers

Table 7-351 lists the memory-mapped registers for the DSS_HWA_HIST_RAM registers. All register offset addresses not listed in Table 7-351 should be considered as reserved locations and the register contents should not be modified.

Table 7-351. DSS_HWA_HIST_RAM Registers

Offset	Acronym	Register Name	Section
0h	START		Go
1FFCh	END		Go

Complex bit access types are encoded to fit into small table cells. Table 7-352 shows the codes that are used for access types in this section.

Table 7-352. DSS_HWA_HIST_RAM Access Type Codes

Access Type	Code	Description
Read Type		
R	R	Read
Write Type		
W	W	Write
Reset or Default Value		
-n		Value after reset or the default value

Copyright © 2025 Texas Instruments Incorporated

7.4.13.11.1 START Register (Offset = 0h) [Reset = 00000000h]

START is shown in Table 7-353.

Return to the Summary Table.

Table 7-353. START Register Field Descriptions

Bit	Field	Type	Reset	Description
31-0	start	R/W	0h	Start address

Copyright © 2025 Texas Instruments Incorporated

7.4.13.11.2 END Register (Offset = 1FFCh) [Reset = 00000000h]

END is shown in Table 7-354.

Return to the Summary Table.

Table 7-354. END Register Field Descriptions

Bit	Field	Type	Reset	Description
31-0	end	R/W	0h	End address

Copyright © 2025 Texas Instruments Incorporated

7.4.13.12 DSS_HWA_HIST_THRESH_RAM Registers

Table 7-355 lists the memory-mapped registers for the DSS_HWA_HIST_THRESH_RAM registers. All register offset addresses not listed in Table 7-355 should be considered as reserved locations and the register contents should not be modified.

Table 7-355. DSS_HWA_HIST_THRESH_RAM Registers

Offset	Acronym	Register Name	Section
0h	START		Go
FCh	END		Go

Complex bit access types are encoded to fit into small table cells. Table 7-356 shows the codes that are used for access types in this section.

Table 7-356. DSS_HWA_HIST_THRESH_RAM Access Type Codes

Access Type	Code	Description
Read Type		
R	R	Read
Write Type		
W	W	Write
Reset or Default Value		
-n		Value after reset or the default value

Copyright © 2025 Texas Instruments Incorporated

7.4.13.12.1 START Register (Offset = 0h) [Reset = 00000000h]

START is shown in Table 7-357.

Return to the Summary Table.

Table 7-357. START Register Field Descriptions

Bit	Field	Type	Reset	Description
31-0	start	R/W	0h	Start address

Copyright © 2025 Texas Instruments Incorporated

7.4.13.12.2 END Register (Offset = FCh) [Reset = 00000000h]

END is shown in Table 7-358.

Return to the Summary Table.

Table 7-358. END Register Field Descriptions

Bit	Field	Type	Reset	Description
31-0	end	R/W	0h	End address

Copyright © 2025 Texas Instruments Incorporated

Chapter 8

Interprocessor Communication

8.1 Mailbox

The device provides a mailbox mechanism to asynchronously exchange the messages between any two processors.

Each processor has a mailbox memory space, and registers designated to be used by other processor that wishes to communicate.

Table 8-1. Processor Cores

PROCESSOR NUMBER	PROCESSOR
PROC0	MSS R5FSS0_CORE0
PROC1	MSS R5FSS0_CORE1
PROC2	HSM M4F
PROC3	DSS C66x DSP
PROC4	DSS M4F

Note

There is an MPU at every Mailbox that can be used to partition the mailbox memory between the Controllers/cores. This gives some flexibility over a fixed allocation scheme.

8.1.1 Maibox Message Scheme.....1721

Copyright © 2025 Texas Instruments Incorporated

8.1.1 Maibox Message Scheme

The mailbox architecture is a distributed architecture with the Mailbox memory present in the Receiving processors Subsystem. The following is the processor numbering for AM273x

Table 8-2. Mailbox Processor ID

Processor	ID
MSS_CR5A	0
HSM_CM4	2
RSS_CR4	3

The processor which wishes to send a message to another processor writes the message to the mailbox memory space, then interrupts the receiver processor. The receiver processor acknowledges the interrupt, then reads the message from the mailbox memory space. The receiver informs the sender that the message is read by an interrupt, which is acknowledged back by the sender. The sender must not initiate another message to the same receiver until the previously initiated mailbox interaction with the same receiver is complete.

1. SENDER writes the message in the RECEIVER mailbox.
2. SENDER triggers an interrupt to RECEIVER by writing 1 to <SENDER_SS>_CTRL: <SENDER>_MBOX_WRITE_DONE [RECEIVER]. Note: It is writing to its own CTRL space.
3. SENDER polls <RECEIVER_SS>_CTRL: <RECEIVER>_MBOX_READ_REQ[SENDER] and keeps writing 1'b1 to <SENDER_SS>_CTRL: <SENDER>_MBOX_WRITE_DONE [RECEIVER] until the read value is 1'b1.
4. RECEIVER gets a single interrupt for all interprocessor communication, which is an aggregated interrupt. RECEIVER reads the register <RECEIVER_SS>_CTRL::<RECEIVER>_MBOX_READ_REQ and sees bit [SENDER] is 0x1.
5. RECEIVER waits for some 60-70 clock cycles before going to next step.
6. RECEIVER writes to 0x1 to <RECEIVER_SS>>_CTRL::<RECEIVER>_MBOX_READ_REQ [SENDER] to clear the interrupt.
7. RECEIVER reads the message.
8. RECEIVER writes to 0x1 to <RECEIVER_SS>>_CTRL::<RECEIVER>_MBOX_READ_DONE_ACK[SENDER] to generate an acknowledgment interrupt to SENDER. SENDER gets a single interrupt for all interprocessor communication, which is an aggregated ACK interrupt.
9. RECEIVER polls the <SENDER_SS>_CTRL: <SENDER>_MBOX_READ_DONE and keeps writing 1'b1 to <RECEIVER_SS>_CTRL: <RECEIVER>_MBOX_READ_DONE_ACK [SENDER] until the read value is 1'b1.
10. SENDER reads the register <SENDER_SS>_CTRL:<SENDER>_MBOX_READ_DONE and sees bit [RECEIVER] is 0x1.
11. SENDER waits for some 60-70 clock cycles before going to next step.
12. SENDER writes 0x1 to <SENDER_SS>_CTRL:<SENDER>_MBOX_READ_DONE [RECEIVER] to clear the interrupt.

Mailbox message example (message from MSS CR5 C0 to RSS):

1. MSS CR5_C0 writes the message in the RSS mailbox.
2. MSS triggers an interrupt to RSS by writing 1 to MSS_CTRL: MSS_CR5A_MBOX_WRITE_DONE [3]. Note: It is writing to its own CTRL space.
3. MSS CR5_C0 polls the RSS_PROC_CTRL:RSS_MBOX_READ_REQ[0] and keeps writing 1 to MSS_CTRL: MSS_CR5A_MBOX_WRITE_DONE [3] until the read value is 1.
4. RSS gets a single interrupt for all interprocessor communication, which is an aggregated interrupt. RSS reads the register RSS_PROC_CTRL::RSS_MBOX_READ_REQ and sees bit [0] is 0x1.
5. RSS waits for some 60-70 clock cycles.
6. RSS writes to 0x1 to RSS_PROC_CTRL::RSS_MBOX_READ_REQ [0] to clear the interrupt.
7. RSS reads the message.

Copyright © 2025 Texas Instruments Incorporated

8. RSS writes to 0x1 to RSS_PROC_CTRL::RSS_MBOX_READ_DONE_ACK [0] to generate an acknowledgment interrupt to MSS CR5 C0.
9. RSS polls the MSS_CTRL:: MSS_CR5A_MBOX_READ_DONE[3] and keeps writing 1 to RSS_PROC_CTRL::RSS_MBOX_READ_DONE_ACK [0] until the read value is 1.
10. MSS CR5 C0 gets a single interrupt for all interprocessor communication, which is an aggregated ACK interrupt. MSS CR5 C0 reads the register MSS_CTRL:: MSS_CR5A_MBOX_READ_DONE and sees bit [3] is 0x1.
11. MSS CR5 C0 waits for some 60-70 clock cycles.
12. MSS CR5 C0 writes 0x1 to MSS_CTRL:: MSS_CR5A_MBOX_READ_DONE [3] to clear the interrupt.

Every processor is always writing to its own control space.

Each processor has only 2 interrupts (aggregated): <PROC>MBOX_READ_REQ and <PROC>MBOX_READ_ACK to its interrupt controller.

Scheme ensures the number of mailbox interrupts to a processor is always only 2, regardless of the number of procs in the SoC.

Refer to

- Section 6.2.6 for details on:
  - DSS_MAILBOX_MEMINT_START
  - DSS_MEMINIT_STATUS
  - DSS_MAILBOX_MEMINIT_DONE
- See MSS_CTRL Memory Map Registers for details on:
  - MSS_MAILBOX_MEM_INIT
  - MSS_MAILBOX_MEM_INIT_DONE
  - MSS_MAILBOX_MEM_INTIT_STATUS
  - MSS_MBOX_BUS_SAFETY_CTRL
  - MSS_MBOX_BUS_SAFETY_FI
  - MSS_MBOX_BUS_SAFETY_ERR
  - MSS_MBOX_BUS_SAFETY_ERR_STAT_DATA0
  - MSS_MBOX_BUS_SAFETY_ERR_STAT_CMD
  - MSS_MBOX_BUS_SAFETY_ERR_STAT_WRITE
  - MSS_MBOX_BUS_SAFETY_ERR_STAT_READ
  - MSS_MBOX_BUS_SAFETY_ERR_STAT_WRITERESP
  - MSS_CR5A_MBOX_WRITE_DONE
  - MSS_CR5A_MBOX_READ_REQ
  - MSS_CR5A_MBOX_READ_DONE
  - MSS_CR5B_MBOX_WRITE_DONE
  - MSS_CR5B_MBOX_READ_REQ
  - MSS_CR5B_MBOX_READ_DONE

Copyright © 2025 Texas Instruments Incorporated

Chapter 9
Interrupts

This section lists the various interrupts sources supported in the different subsystem of AM273x device

9.1 Main Subsystem Cortex R5F Interrupt Map

Table 9-1. Main Subsystem Cortex R5F Interrupt Map

Interrupt Number	Define Name	Description
0	MSS_ESM_LO	ESM Low Priority Interrupt
1	MSS_ESM_HI	ESM High Priority Interrupt
2	CR5SS_STC_DONE	Cortexr5ss subsystem STC complete interrupt
3	MSS_RTIA_INT0	RTIA compare interrupt
4	MSS_RTIA_INT1	RTIA compare interrupt
5	MSS_RTIA_INT2	RTIA compare interrupt
6	MSS_RTIA_INT3	RTIA compare interrupt
7	MSS_RTIA_OVERFLOW_INT0	RTIA overflow interrupt
8	MSS_RTIA_OVERFLOW_INT1	RTIA overflow interrupt
9	MSS_RTIB_INT0	RTIB compare interrupt
10	MSS_RTIB_INT1	RTIB compare interrupt
11	MSS_RTIB_OVERFLOW_INT0	RTIB overflow interrupt
12	MSS_RTIB_OVERFLOW_INT1	RTIB overflow interrupt
13	MSS_RTIC_INT0	RTIC compare interrupt
14	MSS_RTIC_INT1	RTIC compare interrupt
15	MSS_RTIC_OVERFLOW_INT0	RTIC overflow interrupt
16	MSS_RTIC_OVERFLOW_INT1	RTIC overflow interrupt
17	MSS_WDT_INT0	WDT compare interrupt
18	MSS_WDT_INT1	WDT compare interrupt
19	MSS_WDT_INT2	WDT compare interrupt
20	MSS_WDT_INT3	WDT compare interrupt
21	MSS_WDT_OVERFLOW_INT0	WDT over flow interrupt
22	MSS_WDT_OVERFLOW_INT1	WDT over flow interrupt
23	MSS_WDT_TB_INT	WDT time base interrupt
24	MSS_MCRC_INT	Interrupt from MCRC
25	MSS_DCCA_INT	MSS_DCCA Clock compare done interrupt
26	MSS_DCCB_INT	MSS_DCCB Clock compare done interrupt
27	MSS_DCCC_INT	MSS_DCCC Clock compare done interrupt
28	MSS_DCCD_INT	MSS_DCCD Clock compare done interrupt
29	MSS_CCCA_INT	MSS_CCCA dual clock compare done interrupt
30	MSS_CCCB_INT	MSS_CCCB dual clock compare done interrupt
31	MSS_SPIA_INT0	MSS_SPIA level 0 interrupt
32	MSS_SPIA_INT1	MSS_SPIA level 1 interrupt

Copyright © 2025 Texas Instruments Incorporated

Table 9-1. Main Subsystem Cortex R5F Interrupt Map (continued)

Interrupt Number	Define Name	Description
33	MSS_SPIB_INT0	MSS_SPIB level 0 interrupt
34	MSS_SPIB_INT1	MSS_SPIB level 1 interrupt
35	MSS_QSPI_INT	MSS_QSPI interrupt
36	MSS_GIO_INT0	MSS_GIO high-level Interrupt
37	MSS_GIO_INT1	MSS_GIO low-level interrupt
38	MSS_ETPWMA_INT0	MSS_ETPWMA Interrupt 0 which is a output to pad
39	MSS_ETPWMA_INT1	MSS_ETPWMA Interrupt 1 which is a output to pad
40	MSS_ETPWMB_INT0	MSS_ETPWMB Interrupt 0 which is a output to pad
41	MSS_ETPWMB_INT1	MSS_ETPWMB Interrupt 1 which is a output to pad
42	MSS_ETPWMC_INT0	MSS_ETPWMC Interrupt 0 which is a output to pad
43	MSS_ETPWMC_INT1	MSS_ETPWMC Interrupt 1 which is a output to pad
44	MSS_MCANA_INT0	MSS_MCANA first interrupt
45	MSS_MCANA_INT1	MSS_MCANA second interrupt
46	MSS_MCANA_FE_INT1	MSS_MCANA message filter interrupt1
47	MSS_MCANA_FE_INT2	MSS_MCANA message filter interrupt2
48	MSS_MCANB_INT0	MSS_MCANB first interrupt
49	MSS_MCANB_INT1	MSS_MCANB second interrupt
50	MSS_MCANB_FE_INT1	MSS_MCANB message filter interrupt1
51	MSS_MCANB_FE_INT2	MSS_MCANB message filter interrupt2
52	MSS_I2C_INT	MSS_I2C interrupt
53	MSS_SCIA_INT0	MSS_SCIA level0 input
54	MSS_SCIA_INT1	MSS_SCIA level1 input
55	MSS_SCIB_INT0	MSS_SCIB level0 input
56	MSS_SCIB_INT1	MSS_SCIB level1 input
57	TOP_PBIST_DONE_INT	TOP_PBIST done interrupt
58	MSS_GIO_PAD_INT0	Interrupt Triger from GIO[0][0]
59	MSS_GIO_PAD_INT1	Interrupt Triger from GIO[0][1]
60	MSS_GIO_PAD_INT2	Interrupt Triger from GIO[0][2]
61	MSS_GIO_PAD_INT3	Interrupt Triger from GIO[0][3]
62	MSS_MCANA_FE_INT3	MSS_MCANA message filter interrupt3
63	MSS_MCANA_FE_INT4	MSS_MCANA message filter interrupt4
64	MSS_MCANA_FE_INT5	MSS_MCANB message filter interrupt5
65	MSS_MCANA_FE_INT6	MSS_MCANA message filter interrupt6
66	MSS_MCANA_FE_INT7	MSS_MCANB message filter interrupt7
67	MSS_TPCC_A_INTAGG	MSS_TPCC_A Aggregated Functional Interrupt
68	MSS_TPCC_B_INTAGG	MSS_TPCC_B Aggregated Functional Interrupt
69	MSS_TPCC_A_ERRAGG	MSS_TPCC_A Agregated Error Interrupt
70	MSS_TPCC_B_ERRAGG	MSS_TPCC_B Agregated Error Interrupt
71	MSS_GPADC_IFM_DONE	MSS_GPADC ifm done interrupt
72	MSS_CPSW_TH_TRSH_INT	MSS CPSW T-host threshold interrupt
73	MSS_CPSW_TH_INT	MSS CPSW T-host interrupt
74	MSS_CPSW_FH_INT	MSS CPSW F-host interrupt
75	MSS_CPSW_MISC_INT	MSS CPSW interrupt
76	RESERVED	RESERVED
77	MSS_CR5A_MBOX_READ_REQ	Aggregated interrupt to MSS CR5A from other processor asking it to read

Copyright © 2025 Texas Instruments Incorporated

Table 9-1. Main Subsystem Cortex R5F Interrupt Map (continued)

Interrupt Number	Define Name	Description
78	MSS_CR5A_MBOX_READ_ACK	Aggregated interrupt to MSS CR5A from other processor saying the reading from their mailbox is done.
79	MSS_CR5B_MBOX_READ_REQ	Aggregated interrupt to MSS CR5B from other processor asking it to read
80	MSS_CR5B_MBOX_READ_ACK	Aggregated interrupt to MSS CR5B from other processor saying the reading from their mailbox is done.
81	RESERVED	RESERVED
82	TOP_DEBUGSS_TXDATA_AVAIL	Interrupt from TOP_DEBUGSS
83	MSS_CR5A_PMU_INT	Pmu Interrupt from MSS_CR5A
84	MSS_CR5B_PMU_INT	Pmu Interrupt from MSS_CR5B
85	MSS_CR5A_FPU_INT	Floating point expection from MSS_CR5A
86	MSS_CR5B_FPU_INT	Floating point expection from MSS_CR5B
87	RESERVED	RESERVED
88	CR5A_CTI_IRQ	IRQ request from CTI module from CR5A
89	CR5B_CTI_IRQ	IRQ request from CTI module from CR5B
90	RESERVED	RESERVED
91	MSS_SW_INT0	Software Interrupt from MSS_CTRL
92	MSS_SW_INT1	Software Interrupt from MSS_CTRL
93	MSS_SW_INT2	Software Interrupt from MSS_CTRL
94	MSS_SW_INT3	Software Interrupt from MSS_CTRL
95	MSS_SW_INT4	Software Interrupt from MSS_CTRL
96	RESERVED	RESERVED
97	MSS_PERIPH_ACCESS_ERRAGG	Aggregation of all access-errros from mpu and control spaces
98	RESERVED	RESERVED
99	RESERVED	RESERVED
100	RESERVED	RESERVED
101	RESERVED	RESERVED
102	RESERVED	RESERVED
103	RESERVED	RESERVED
104	RESERVED	RESERVED
105	RESERVED	RESERVED
106	RESERVED	RESERVED
107	MSS_RTIB_INT2	RTIB compare interrupt
108	MSS_RTIB_INT3	RTIB compare interrupt
109	MSS_RTIC_INT2	RTIC compare interrupt
110	MSS_RTIC_INT3	RTIC compare interrupt
111	RESERVED	RESERVED
112	RESERVED	RESERVED
113	MSS_MCANB_FE_INT3	MSS_MCANB message filter interrupt3
114	MSS_MCANB_FE_INT4	MSS_MCANB message filter interrupt4
115	MSS_MCANB_FE_INT5	MSS_MCANB message filter interrupt5
116	MSS_MCANB_FE_INT6	MSS_MCANB message filter interrupt6
117	MSS_MCANB_FE_INT7	MSS_MCANB message filter interrupt7
118	RESERVED	RESERVED
119	RESERVED	RESERVED
120	DSS_TPCC_A_INTAGG	DSS_TPCC_A Aggregated Functional Interrupt
121	DSS_TPCC_A_ERRAGG	DSS_TPCC_A Agregated Error Interrupt

Copyright © 2025 Texas Instruments Incorporated

Table 9-1. Main Subsystem Cortex R5F Interrupt Map (continued)

Interrupt Number	Define Name	Description
122	DSS_TPCC_B_INTAGG	DSS_TPCC_B_Aggregated Functional Interrupt
123	DSS_TPCC_B_ERRAGG	DSS_TPCC_B Agregated Error Interrupt
124	DSS_TPCC_C_INTAGG	DSS_TPCC_C Aggregated Functional Interrupt
125	DSS_TPCC_C_ERRAGG	DSS_TPCC_C Agregated Error Interrupt
126	Reserved	
127	Reserved	
128	Reserved	
129	DSS_DSP_PBIST_CTRL_DONE	DSS DSP PBIST Controller Done Interrupt
130	DSS_SW_INT0	SW interrupt generated by writing 0x1 to register DSS_CTRL.DSS_SW_INT[0]
131	DSS_SW_INT1	SW interrupt generated by writing 0x1 to register DSS_CTRL.DSS_SW_INT[1]
132	DSS_SW_INT2	SW interrupt generated by writing 0x1 to register DSS_CTRL.DSS_SW_INT[2]
133	DSS_SW_INT3	SW interrupt generated by writing 0x1 to register DSS_CTRL.DSS_SW_INT[3]
134	Reserved	ESM Low Priority Interrupt
135	Reserved	ESM High Priority Interrupt
136	DSS_MCRC_INT	DSS MCRC Interrupt
137	DSS_DSP_STC_DONE	DSS DSP STC Done Interrupt
138	Reserved	
139	DSS_SCIA_INT0	DSS SCIA Interrupt 0
140	DSS_SCIA_INT1	DSS SCIA Interrupt 1
141	RCSS_SCIA_INT	RCSS_SCIA Cominbed Interrupt from IP
142	RCSS_SCIA_ERR	RCSS_SCIA Error Interrupt
143	DSS_CBUFF_INT	DSS CBUFF Interrupt
144	DSS_CBUFF_INT_ERR	DSS CBUFF Error Interrupt
145	DSS_HWA_THREAD1_LOOP_INT	DSS_HWA Thread1 Loop complete interrupt
146	DSS_HWA_THREAD1_PARAM_DONE	DSS_HWA Thread1 Param done interrupt
147	RCSS_SPIA_INT0	RCSS SPI A Interrupt 0
148	RCSS_SPIA_INT1	RCSS SPI A Interrupt 1
149	RCSS_SPIB_INT0	RCSS SPI B Interrupt 0
150	RCSS_SPIB_INT1	RCSS SPI B Interrupt 1
151	RCSS_TPCC_A_INTAGG	RCSS_TPCC_A Aggregated Functional Interrupt
152	RCSS_TPCC_A_ERRAGG	RCSS_TPCC_A Aggregated Error Interrupt
153	RCSS_ECAP_INT	RCSS ECAP Interrupt
154	RCSS_MCASPA_TX_INT	RCSS McASP A Tx Interrupt
155	RCSS_MCASPB_TX_INT	RCSS McASP B Tx Interrupt
156	RCSS_MCASPB_TX_INT	RCSS McASP C Tx Interrupt
157	RCSS_MCASPA_RX_INT	RCSS McASP A Rx Interrupt
158	RCSS_MCASPB_RX_INT	RCSS McASP B Rx Interrupt
159	RCSS_MCASPC_RX_INT	RCSS McASP C Rx Interrupt
160	DSS_HWA_THREAD2_LOOP_INT	DSS_HWA Thread2 Loop complete interrupt
161	DSS_HWA_THREAD2_PARAM_DONE	DSS_HWA Thread2 Param done interrupt
162	DSS_WDT_TB_INT	DSS WDT Time Base Interrupt

Copyright © 2025 Texas Instruments Incorporated

Table 9-1. Main Subsystem Cortex R5F Interrupt Map (continued)

Interrupt Number	Define Name	Description
163	DSS_HWA_LOCAL_RAM_ERR	DSS_HWA Local RAM access error
164	DSS DCCA_INT	DSS DCCA Interrupt
165	DSS_DCCB_INT	DSS DCCB Interrupt
166	DSS_RTIA_OVERFLOW_0	DSS_RTIA Overflow 0
167	DSS_RTIA_OVERFLOW_1	DSS_RTIA Overflow 1
168	DSS_RTIA_0	DSS_RTIA Interrupt 0
169	DSS_RTIA_1	DSS_RTIA Interrupt 1
170	DSS_RTIA_2	DSS_RTIA Interrupt 2
171	DSS_RTIA_3	DSS_RTIA Interrupt 3
172	DSS_RTIB_OVERFLOW_0	DSS_RTIB Overflow 0
173	DSS_RTIB_OVERFLOW_1	DSS_RTIB Overflow 1
174	DSS_RTIB_0	DSS_RTIB Interrupt 0
175	DSS_RTIB_1	DSS_RTIB Interrupt 1
176	DSS_RTIB_2	DSS_RTIB Interrupt 2
177	DSS_RTIB_3	DSS_RTIB Interrupt 3
178	DSS_WDT_OVERFLOW_0	DSS_WDT Overflow 0
179	DSS_WDT_OVERFLOW_1	DSS_WDT Overflow 1
180	DSS_WDT_0	DSS_WDT Interrupt 0
181	DSS_WDT_1	DSS_WDT Interrupt 1
182	DSS_WDT_2	DSS_WDT Interrupt 2
183	DSS_WDT_3	DSS_WDT Interrupt 3
184	RCSS_CSI2A_INT	RCSS CSI2A Interrupt
185	RCSS_CSI2A_EOL_INT	RCSS CSI2A End of Line Interrupt
186	RCSS_CSI2A_SOF_INT0	RCSS CSI2A Start of Frame Interrupt 0
187	RCSS_CSI2A_SOF_INT1	RCSS CSI2A Start of Frame Interrupt 1
188	RCSS_CSI2B_INT	RCSS CSI2B Interrupt
189	RCSS_CSI2B_EOL_INT	RCSS CSI2B End of Line Interrupt
190	RCSS_CSI2B_SOF_INT0	RCSS CSI2B Start of Frame Interrupt 0
191	RCSS_CSI2B_SOF_INT1	RCSS CSI2B Start of Frame Interrupt 1
192	RCSS_I2CA_INT	RCSS I2C A Interrupt
193	RCSS_I2CB_INT	RCSS I2C B Interrupt
194	RCSS_GIO_INT0	RCSS_GIO high-level Interrupt
195	RCSS_GIO_INT1	RCSS_GIO low-level interrupt
196	DSS_DSP_MBOX_READ_REQ	DSS DSP Mailbox Read Request
197	DSS_DSP_MBOX_READ_ACK	DSS DSP Mailbox Read Acknowledge
198	RESERVED	RESERVED
199	RESERVED	RESERVED
200	MSS_DMM_A_INT0	Interrupt from MSS_DMM_A
201	MSS_DMM_A_INT1	Interrupt from MSS_DMM_A
202	MSS_DMM_B_INT0	Interrupt from MSS_DMM_B
203	MSS_DMM_B_INT1	Interrupt from MSS_DMM_B
204	RESERVED	RESERVED
205	RESERVED	RESERVED
206	RESERVED	RESERVED
207	RESERVED	RESERVED

Copyright © 2025 Texas Instruments Incorporated

Table 9-1. Main Subsystem Cortex R5F Interrupt Map (continued)

Interrupt Number	Define Name	Description
208	RESERVED	RESERVED
209	RESERVED	RESERVED
210	RCSS_CSI2A_SOF_INT	RCSS CSI2A Start of Frame Interrupt
211	RCSS_CSI2A_EOL_CNTX0_INT	RCSS_CSI2A End of Line Interrupt for Context 0
212	RCSS_CSI2A_EOL_CNTX1_INT	RCSS_CSI2A End of Line Interrupt for Context 1
213	RCSS_CSI2A_EOL_CNTX2_INT	RCSS_CSI2A End of Line Interrupt for Context 2
214	RCSS_CSI2A_EOL_CNTX3_INT	RCSS_CSI2A End of Line Interrupt for Context 3
215	RCSS_CSI2A_EOL_CNTX4_INT	RCSS_CSI2A End of Line Interrupt for Context 4
216	RCSS_CSI2A_EOL_CNTX5_INT	RCSS_CSI2A End of Line Interrupt for Context 5
217	RCSS_CSI2A_EOL_CNTX6_INT	RCSS_CSI2A End of Line Interrupt for Context 6
218	RCSS_CSI2A_EOL_CNTX7_INT	RCSS_CSI2A End of Line Interrupt for Context 7
219	RCSS_CSI2B_SOF_INT	RCSS CSI2B Start of Frame Interrupt
220	RCSS_CSI2B_EOL_CNTX0_INT	RCSS_CSI2B End of Line Interrupt for Context 0
221	RCSS_CSI2B_EOL_CNTX1_INT	RCSS_CSI2B End of Line Interrupt for Context 1
222	RCSS_CSI2B_EOL_CNTX2_INT	RCSS_CSI2B End of Line Interrupt for Context 2
223	RCSS_CSI2B_EOL_CNTX3_INT	RCSS_CSI2B End of Line Interrupt for Context 3
224	RCSS_CSI2B_EOL_CNTX4_INT	RCSS_CSI2B End of Line Interrupt for Context 4
225	RCSS_CSI2B_EOL_CNTX5_INT	RCSS_CSI2B End of Line Interrupt for Context 5
226	RCSS_CSI2B_EOL_CNTX6_INT	RCSS_CSI2B End of Line Interrupt for Context 6
227	RCSS_CSI2B_EOL_CNTX7_INT	RCSS_CSI2B End of Line Interrupt for Context 7
228	RESERVED	RESERVED
229	MSS_GIO_PAD_INT4	Interrupt Triger from MSS GIO[1][0]
230	MSS_GIO_PAD_INT5	Interrupt Triger from MSS GIO[1][1]
231	MSS_GIO_PAD_INT6	Interrupt Triger from MSS GIO[1][2]
232	MSS_GIO_PAD_INT7	Interrupt Triger from MSS GIO[1][3]
233-256	RESERVED	RESERVED

9.2 DSP Subsystem C66x Interrupt Map

Table 9-2. TI DSP Subsystem C66x Interrupt Map

Interrupt Number	Define Name	Description
NMI	DSS_ESM_HI	ESM High Priority Interrupt
Interrupts	Define Name	Description
16	DSP_PD_TRIGGER_WAKUP	Genreated on Write from DSS_RCM::DSP_PD_TRIGGER_WAKUP
17	Reserved	
18	DSS_TPCC_A_INTAGG	DSS_TPCC_A Aggregated Functional Interrupt
19	DSS_TPCC_A_ERRAGG	DSS_TPCC_A Agregated Error Interrupt
20	DSS_TPCC_B_INTAGG	DSS_TPCC_B_Aggregated Functional Interrupt
21	DSS_TPCC_B_ERRAGG	DSS_TPCC_B Agregated Error Interrupt
22	DSS_TPCC_C_INTAGG	DSS_TPCC_C Aggregated Functional Interrupt
23	DSS_TPCC_C_ERRAGG	DSS_TPCC_C Agregated Error Interrupt
24	DSS_PERIPH_ACCESS_ERRAGG	Aggregation of access-errros from DSS peripherals.
25	Reserved	
26	Reserved	
27	DSS_DSP_PBIST_CTRL_DONE	DSS DSP PBIST Controller Done Interrupt

Copyright © 2025 Texas Instruments Incorporated

Table 9-2. TI DSP Subsystem C66x Interrupt Map (continued)

Interrupt Number	Define Name	Description
28	DSS_SW_INT0	SW interrupt generated by writing 0x1 to register DSS_CTRL.DSS_SW_INT[0]
29	DSS_SW_INT1	SW interrupt generated by writing 0x1 to register DSS_CTRL.DSS_SW_INT[1]
30	DSS_SW_INT2	SW interrupt generated by writing 0x1 to register DSS_CTRL.DSS_SW_INT[2]
31	DSS_SW_INT3	SW interrupt generated by writing 0x1 to register DSS_CTRL.DSS_SW_INT[3]
32	DSS_ESM_LO	ESM Low Priority Interrupt
33	DSS_ESM_HI	ESM High Priority Interrupt
34	DSS_MCRC_INT	DSS MCRC Interrupt
35	DSS_DSP_STC_DONE	DSS DSP STC Done Interrupt
36	DSS_DSP_PBIST_DONE	DSS DSP PBIST Done Interrupt
37	DSS_SCIA_INT0	DSS SCIA Interrupt 0
38	DSS_SCIA_INT1	DSS SCIA Interrupt 1
39	RCSS_SCIA_INT	RCSS_SCIA Cominbed Interrupt from IP
40	RCSS_SCIA_ERR	RCSS_SCIA Error Interrupt
41	DSS_CBUFF_INT	DSS CBUFF Interrupt
42	DSS_CBUFF_INT_ERR	DSS CBUFF Error Interrupt
43	DSS_HWA_THREAD1_LOOP_INT	DSS_HWA Thread1 Loop complete interrupt
44	DSS_HWA_THREAD1_PARAM_DONE	DSS_HWA Thread1 Param done interrupt
45	RCSS_SPIA_INT0	RCSS SPI A Interrupt 0
46	RCSS_SPIA_INT1	RCSS SPI A Interrupt 1
47	RCSS_SPIB_INT0	RCSS SPI B Interrupt 0
48	RCSS_SPIB_INT1	RCSS SPI B Interrupt 1
49	RCSS_TPCC_A_INTAGG	RCSS_TPCC_A Aggregated Functional Interrupt
50	RCSS_TPCC_A_ERRAGG	RCSS_TPCC_A Aggregated Error Interrupt
51	RCSS_ECAP_INT	RCSS ECAP Interrupt
52	RCSS_MCASPA_TX_INT	RCSS McASP A Tx Interrupt
53	RCSS_MCASPB_TX_INT	RCSS McASP B Tx Interrupt
54	RCSS_MCASPB_TX_INT	RCSS McASP C Tx Interrupt
55	RCSS_MCASPA_RX_INT	RCSS McASP A Rx Interrupt
56	RCSS_MCASPB_RX_INT	RCSS McASP B Rx Interrupt
57	RCSS_MCASPC_RX_INT	RCSS McASP C Rx Interrupt
58	DSS_HWA_THREAD2_LOOP_INT	DSS_HWA Thread2 Loop complete interrupt
59	DSS_HWA_THREAD2_PARAM_DONE	DSS_HWA Thread2 Param done interrupt
60	DSS_WDT_TB_INT	DSS WDT Time Base Interrupt
61	DSS_HWA_LOCAL_RAM_ERR	DSS_HWA Local RAM access error
62	DSS_DCCA_INT	DSS DCCA Interrupt
63	DSS_DCCB_INT	DSS DCCB Interrupt
64	DSS_RTIA_OVERFLOW_0	DSS_RTIA Overflow 0
65	DSS_RTIA_OVERFLOW_1	DSS_RTIA Overflow 1
66	DSS_RTIA_0	DSS_RTIA Interrupt 0
67	DSS_RTIA_1	DSS_RTIA Interrupt 1
68	DSS_RTIA_2	DSS_RTIA Interrupt 2

Copyright © 2025 Texas Instruments Incorporated

Table 9-2. TI DSP Subsystem C66x Interrupt Map (continued)

Interrupt Number	Define Name	Description
69	DSS_RTIA_3	DSS_RTIA Interrupt 3
70	DSS_RTIB_OVERFLOW_0	DSS_RTIB Overflow 0
71	DSS_RTIB_OVERFLOW_1	DSS_RTIB Overflow 1
72	DSS_RTIB_0	DSS_RTIB Interrupt 0
73	DSS_RTIB_1	DSS_RTIB Interrupt 1
74	DSS_RTIB_2	DSS_RTIB Interrupt 2
75	DSS_RTIB_3	DSS_RTIB Interrupt 3
76	DSS_WDT_OVERFLOW_0	DSS_WDT Overflow 0
77	DSS_WDT_OVERFLOW_1	DSS_WDT Overflow 1
78	DSS_WDT_0	DSS_WDT Interrupt 0
79	DSS_WDT_1	DSS_WDT Interrupt 1
80	DSS_WDT_2	DSS_WDT Interrupt 2
81	DSS_WDT_3	DSS_WDT Interrupt 3
82	RCSS_CSI2A_INT	RCSS CSI2A Interrupt
83	RCSS_CSI2A_EOL_INT	RCSS CSI2A End of Line Interrupt
84	RCSS_CSI2A_SOF_INT0	RCSS CSI2A Start of Frame Interrupt 0
85	RCSS_CSI2A_SOF_INT1	RCSS CSI2A Start of Frame Interrupt 1
86	RCSS_CSI2B_INT	RCSS CSI2B Interrupt
87	RCSS_CSI2B_EOL_INT	RCSS CSI2B End of Line Interrupt
88	RCSS_CSI2B_SOF_INT0	RCSS CSI2B Start of Frame Interrupt 0
89	RCSS_CSI2B_SOF_INT1	RCSS CSI2B Start of Frame Interrupt 1
90	RCSS_I2CA_INT	RCSS I2C A Interrupt
91	RCSS_I2CB_INT	RCSS I2C B Interrupt
92	RCSS_GIO_INT0	RCSS_GIO high-level Interrupt
93	RCSS_GIO_INT1	RCSS_GIO low-level interrupt
94	DSS_DSP_MBOX_READ_REQ	DSS DSP Mailbox Read Request
95	DSS_DSP_MBOX_READ_ACK	DSS DSP Mailbox Read Acknowledge

9.3 DSP Subsystem Cortex M4 Interrupt Map

Table 9-3. DSP Subsystem Cortex M4 Interrupt Map

Interrupt Number	Define Name	Description
NMI	Pending	Pending alignment with architecture
Interrupts	Define Name	Description
0	RCSS_CSI2A_EOL_CNTX0_INT	RCSS_CSI2A End of Line Interrupt for Context 0
1	RCSS_CSI2A_EOL_CNTX1_INT	RCSS_CSI2A End of Line Interrupt for Context 1
2	RCSS_CSI2A_EOL_CNTX2_INT	RCSS_CSI2A End of Line Interrupt for Context 2
3	RCSS_CSI2A_EOL_CNTX3_INT	RCSS_CSI2A End of Line Interrupt for Context 3
4	RCSS_CSI2A_EOL_CNTX4_INT	RCSS_CSI2A End of Line Interrupt for Context 4
5	RCSS_CSI2A_EOL_CNTX5_INT	RCSS_CSI2A End of Line Interrupt for Context 5
6	RCSS_CSI2A_EOL_CNTX6_INT	RCSS_CSI2A End of Line Interrupt for Context 6
7	RCSS_CSI2A_EOL_CNTX7_INT	RCSS_CSI2A End of Line Interrupt for Context 7
8	RCSS_CSI2B_EOL_CNTX0_INT	RCSS_CSI2B End of Line Interrupt for Context 0
9	RCSS_CSI2B_EOL_CNTX1_INT	RCSS_CSI2B End of Line Interrupt for Context 1
10	RCSS_CSI2B_EOL_CNTX2_INT	RCSS_CSI2B End of Line Interrupt for Context 2
11	RCSS_CSI2B_EOL_CNTX3_INT	RCSS_CSI2B End of Line Interrupt for Context 3

Copyright © 2025 Texas Instruments Incorporated

Table 9-3. DSP Subsystem Cortex M4 Interrupt Map (continued)

Interrupt Number	Define Name	Description
12	RCSS_CSI2B_EOL_CNTX4_INT	RCSS_CSI2B End of Line Interrupt for Context 4
13	RCSS_CSI2B_EOL_CNTX5_INT	RCSS_CSI2B End of Line Interrupt for Context 5
14	RCSS_CSI2B_EOL_CNTX6_INT	RCSS_CSI2B End of Line Interrupt for Context 6
15	RCSS_CSI2B_EOL_CNTX7_INT	RCSS_CSI2B End of Line Interrupt for Context 7
16	RCSS_CSI2A_SOF_TRIG0_INT	RCSS_CSI2A Frame Start Trigger 0
17	RCSS_CSI2A_SOF_TRIG1_INT	RCSS_CSI2A Frame Start Trigger 1
18	RCSS_CSI2B_SOF_TRIG0_INT	RCSS_CSI2B Frame Start Trigger 0
19	RCSS_CSI2B_SOF_TRIG1_INT	RCSS_CSI2B Frame Start Trigger 1
20	DSS_HWA_THREAD1_LOOP_INT	DSS_HWA Thread1 Loop complete interrupt
21	DSS_HWA_THREAD1_PARAM_DONE	DSS_HWA Thread1 Param done interrupt
22	DSS_HWA_THREAD2_LOOP_INT	DSS_HWA Thread2 Loop complete interrupt
23	DSS_HWA_THREAD2_PARAM_DONE	DSS_HWA Thread2 Param done interrupt
24	DSS_HWA_LOCAL_RAM_ERR	DSS_HWA Local RAM access error
25	DSS_HWA_SPARE0	DSS_HWA Spare 0
26	DSS_HWA_SPARE1	DSS_HWA Spare 1
27	DSS_HWA_DMA_REQ_ORED	DSS_HWA DMA 32 Request Lines Ored
28	DSS_HWA_ERR_ORED	DSS_HWA ESM Group1 and Group2 Errors Ored
29	MSS_MCANA	MSS_MCANA Interrupt
30	MSS_MCANB	MSS_MCANB Interrupt
31	MSS_CPSW	MSS_CPSW Interrupt
32	DSS_CM4_MBOX_READ_REQ	DSS CM4 Mailbox Read Request
33	DSS_CM4_MBOX_READ_ACK	DSS CM4 Mailbox Read Acknowledge
34	DSS_WDT_NMI_REQ	DSS_WDT Non Maskable Interrupt
35	Reserved	Reserved
36	DSS_RTIA_0	DSS_RTIA Interrupt 0
37	DSS_RTIA_1	DSS_RTIA Interrupt 1
38	DSS_RTIA_2	DSS_RTIA Interrupt 2
39	DSS_RTIA_3	DSS_RTIA Interrupt 3
40	DSS_RTIA_OVERFLOW_0	DSS_RTIA Overflow 0
41	DSS_RTIA_OVERFLOW_1	DSS_RTIA Overflow 1
42	DSS_CM4_STC_DONE	DSS_CM4 STC Done interrupt
43	DSS_CM4_PERIPH_ACCESS_ERR AGG	Aggregation of access-errros from DSS CM4 peripherals. See Error access Response Section for more details
44	DSS_CM4_ACCESS_ERR_AGG	Write access error on the processor AHB Master ports
45	DSS_CM4_CTI_TRIGOUT2	DSS CM4 CTI Trigout 2
46	DSS_CM4_CTI_TRIGOUT3	DSS CM4 CTI Trigout 3
47	Reserved	Reserved
48	Reserved	Reserved
49	DSS_TPCC_A_INTAGG	DSS_TPCC_A Aggregated Functional Interrupt
50	DSS_TPCC_B_INTAGG	DSS_TPCC_B Aggregated Functional Interrupt
51	DSS_TPCC_C_INTAGG	DSS_TPCC_C Aggregated Functional Interrupt
52	DSS_DSP_SW_INT0	Software Interrupt from DSS_CTRL.DSS_SW_INT[0]
53	DSS_DSP_SW_INT1	Software Interrupt from DSS_CTRL.DSS_SW_INT[1]
54	MSS_CR5_SW_INT0	Software Interrupt from MSS_CTRL

Copyright © 2025 Texas Instruments Incorporated

Table 9-3. DSP Subsystem Cortex M4 Interrupt Map (continued)

Interrupt Number	Define Name	Description
55	MSS_CR5_SW_INT1	Software Interrupt from MSS_CTRL
56	RCSS_GIO_INT0	RCSS_GIO high-level Interrupt
57	RCSS_GIO_INT1	RCSS_GIO low-level interrupt
58	RCSS_SPIA_INT0	RCSS SPI A Interrupt 0
59	RCSS_SPIA_INT1	RCSS SPI A Interrupt 1
60	RCSS_SPIB_INT0	RCSS SPI B Interrupt 0
61	RCSS_SPIB_INT1	RCSS SPI B Interrupt 1
62	RCSS_GIO_PAD_INT0	Interrupt Triger from RCSS_GIO[0][2]
63	RCSS_GIO_PAD_INT1	Interrupt Triger from RCSS_GIO[0][3]

9.4 Main Subsystem ESM Interrupt Map

Table 9-4. Main Subsystem ESM Interrupt Map Group 1

ESM GROUP1	Define Name	Description
127:124	RESERVED	RESERVED
123	ANA_WU_AND_CLK_STATUS_ERR	Aggregated Error from ANA_WU_STATUS_REG and ANA_CLK_STATUS_REG
122	MSS_BUS_SAFETY_CR5B_AHB	AHB bridges safety Error for Cr5B
		- Comparision Error of all outputs from AHB bridge of CR5A
121	MSS_BUS_SAFETY_CR5A_AHB	AHB bridges safety Error for Cr5A
		- Comparision Error of all outputs from AHB bridge of CR5A
120	MSS_BUS_SAFETY_SCRP	MSS Bus Safety Error for the Node MSSS_BUS_SAFETY_(X)
		-Comparision Error of all outputs from VBUSP_SCR of MSS
119	MSS_BUS_SAFETY_MSS2MDO	MSS Bus Safety Error for the Node MSSS_BUS_SAFETY_(X)
		- ECC Uncorrectable Data Error
		- Compare Error on Control
118	MSS_BUS_SAFETY_DMM_SLAVE	MSS Bus Safety Error for the Node MSSS_BUS_SAFETY_(X)
		- ECC Uncorrectable Data Error
		- Compare Error on Control
117	MSS_BUS_SAFETY_DMM_MST	MSS Bus Safety Error for the Node MSSS_BUS_SAFETY_(X)
		- ECC Uncorrectable Data Error
		- Compare Error on Control
116	MSS_BUS_SAFETY_GPADC	MSS Bus Safety Error for the Node MSSS_BUS_SAFETY_(X)
		- ECC Uncorrectable Data Error
		- Compare Error on Control
115	MSS_BUS_SAFETY_RET_RAM	MSS Bus Safety Error for the Node MSSS_BUS_SAFETY_(X)
		- ECC Uncorrectable Data Error
		- Compare Error on Control

Copyright © 2025 Texas Instruments Incorporated

Table 9-4. Main Subsystem ESM Interrupt Map Group 1 (continued)

ESM GROUP1	Define Name	Description
114	MSS_BUS_SAFETY_MBOX	MSS Bus Safety Error for the Node MSSS_BUS_SAFETY_(X)
		- ECC Uncorrectable Data Error
		- Compare Error on Control
113	RESERVED	RESERVED
112	RESERVED	RESERVED
111	RESERVED	RESERVED
110	MSS_BUS_SAFETY_HSM_SLAVE	MSS Bus Safety Error for the Node MSSS_BUS_SAFETY_(X)
		- ECC Uncorrectable Data Error
		- Compare Error on Control
108 to 109	RESERVED	RESERVED
107	MSS_BUS_SAFETY_MCRC	MSS Bus Safety Error for the Node MSSS_BUS_SAFETY_(X)
		- ECC Uncorrectable Data Error
		- Compare Error on Control
106	MSS_BUS_SAFETY_QSPI	MSS Bus Safety Error for the Node MSSS_BUS_SAFETY_(X)
		- ECC Uncorrectable Data Error
		- Compare Error on Control
105	MSS_BUS_SAFETY_SEC_TPTC_A1_WR	MSS Bus Safety Error for the Node MSSS_BUS_SAFETY_(X)
		- ECC Uncorrectable Data Error
		- Compare Error on Control
104	MSS_BUS_SAFETY_SEC_TPTC_A1_RD	MSS Bus Safety Error for the Node MSSS_BUS_SAFETY_(X)
		- ECC Uncorrectable Data Error
		- Compare Error on Control
103	MSS_BUS_SAFETY_SEC_TPTC_A0_WR	MSS Bus Safety Error for the Node MSSS_BUS_SAFETY_(X)
		- ECC Uncorrectable Data Error
		- Compare Error on Control
102	MSS_BUS_SAFETY_SEC_TPTC_A0_RD	MSS Bus Safety Error for the Node MSSS_BUS_SAFETY_(X)
		- ECC Uncorrectable Data Error
		- Compare Error on Control
101	MSS_BUS_SAFETY_TPTC_B0_WR	MSS Bus Safety Error for the Node MSSS_BUS_SAFETY_(X)
		- ECC Uncorrectable Data Error
		- Compare Error on Control
100	MSS_BUS_SAFETY_TPTC_A1_WR	MSS Bus Safety Error for the Node MSSS_BUS_SAFETY_(X)
		- ECC Uncorrectable Data Error
		- Compare Error on Control
99	MSS_BUS_SAFETY_TPTC_A0_WR	MSS Bus Safety Error for the Node MSSS_BUS_SAFETY_(X)
		- ECC Uncorrectable Data Error
		- Compare Error on Control

Copyright © 2025 Texas Instruments Incorporated

Table 9-4. Main Subsystem ESM Interrupt Map Group 1 (continued)

ESM GROUP1	Define Name	Description
98	MSS_BUS_SAFETY_TPTC_B0_RD	MSS Bus Safety Error for the Node MSSS_BUS_SAFETY_(X)
		- ECC Uncorrectable Data Error
		- Compare Error on Control
97	MSS_BUS_SAFETY_TPTC_A1_RD	MSS Bus Safety Error for the Node MSSS_BUS_SAFETY_(X)
		- ECC Uncorrectable Data Error
		- Compare Error on Control
96	MSS_BUS_SAFETY_TPTC_A0_RD	MSS Bus Safety Error for the Node MSSS_BUS_SAFETY_(X)
		- ECC Uncorrectable Data Error
		- Compare Error on Control
95	MSS_BUS_SAFETY_CPSW	MSS Bus Safety Error for the Node MSSS_BUS_SAFETY_(X)
		- ECC Uncorrectable Data Error
		- Compare Error on Control
94	MSS_BUS_SAFETY_HSM_MST	MSS Bus Safety Error for the Node MSSS_BUS_SAFETY_(X)
		- ECC Uncorrectable Data Error
		- Compare Error on Control
93	MSS_BUS_SAFETY_DAP_RS232	MSS Bus Safety Error for the Node MSSS_BUS_SAFETY_(X)
		- ECC Uncorrectable Data Error
		- Compare Error on Control
92	MSS_BUS_SAFETY_CR5B_SLV	MSS Bus Safety Error for the Node MSSS_BUS_SAFETY_(X)
		- ECC Uncorrectable Data Error
		- Compare Error on Control
91	MSS_BUS_SAFETY_CR5A_SLV	MSS Bus Safety Error for the Node MSSS_BUS_SAFETY_(X)
		- ECC Uncorrectable Data Error
		- Compare Error on Control
87 to 90	RESERVED	RESERVED
86	MSS_MPU_MBOX_ADDR_ERR	MPU Addressing Error for MSS_MPU_(X)_ADDR_ERR
85	MSS_MPU_MBOX_PROT_ERR	MPU Protection Error for MSS_MPU_(X)_ADDR_ERR
84	MSS_MPU_L2_BANKA_ADDR_ERR	MPU Addressing Error for MSS_MPU_(X)_ADDR_ERR
83	MSS_MPU_L2_BANKA_PROT_ERR	MPU Protection Error for MSS_MPU_(X)_ADDR_ERR
82	MSS_MPU_L2_BANKB_ADDR_ERR	MPU Addressing Error for MSS_MPU_(X)_ADDR_ERR
81	MSS_MPU_L2_BANKB_PROT_ERR	MPU Protection Error for MSS_MPU_(X)_ADDR_ERR
80	RESERVED	RESERVED
79	MSS_MPU_PCRA_ADDR_ERR	MPU Addressing Error for MSS_MPU_(X)_ADDR_ERR
78	MSS_MPU_QSPI_ADDR_ERR	MPU Addressing Error for MSS_MPU_(X)_ADDR_ERR

Copyright © 2025 Texas Instruments Incorporated

Table 9-4. Main Subsystem ESM Interrupt Map Group 1 (continued)

ESM GROUP1	Define Name	Description
77	MSS_MPU_CR5A_SLV_ADDR_ERR	MPU Addressing Error for MSS_MPU_(X)_ADDR_ERR
76	MSS_MPU_CR5B_SLV_ADDR_ERR	MPU Addressing Error for MSS_MPU_(X)_ADDR_ERR
75	MSS_MPU_HSM_SLV_ADDR_ERR	MPU Addressing Error for MSS_MPU_(X)_ADDR_ERR
74	RESERVED	RESERVED
73	MSS_MPU_PCRA_PROT_ERR	MPU Protection Error for MSS_MPU_(X)_ADDR_ERR
72	MSS_MPU_QSPI_PROT_ERR	MPU Protection Error for MSS_MPU_(X)_ADDR_ERR
71	MSS_MPU_CR5A_SLV_PROT_ERR	MPU Protection Error for MSS_MPU_(X)_ADDR_ERR
70	MSS_MPU_CR5B_SLV_PROT_ERR	MPU Protection Error for MSS_MPU_(X)_ADDR_ERR
69	MSS_MPU_HSM_SLV_PROT_ERR	MPU Protection Error for MSS_MPU_(X)_ADDR_ERR
68	MSS_CPSW_SERR	Cpsw memories Single bit error pulse
67	MSS_CPSW_UERR	Cpsw memories Double bit error pulse
66	MSS_BUS_SAFETY_SEC_AGG_ERR	Aggregated error for SEC from all Nodes in MSS_SCR
64 to 65	RESERVED	RESERVED
63	ANA_LIMP_MODE	Error signal from analog if the CLK monitor finds the
		REF CLK to be outside the permissible range of frequency
62	MSS_MCRC_ERR	MCRC Comparision Error
61	MSS_DCCA_ERR	DCCA frequency comparision error
60	MSS_DCCB_ERR	DCCB frequency comparision error
59	MSS_DCCC_ERR	DCCC frequency comparision error
58	MSS_DCCD_ERR	DCCD frequency comparision error
57	MSS_CCCA_ERR	CCCA frequency comparision error
56	MSS_CCCB_ERR	CCCB frequency comparision error
55	MSS_SPIA_SERR	Single Bit correctable error indication for
		MIBSPI-A multi-buffer
54	MSS_SPIB_SERR	Single Bit correctable error indication for
		MIBSPI-B multi-buffer
53	MSS_SPIA_UERR	Multi Bit uncorrectable error indication for
		MIBSPI-A muti-buffer
52	MSS_SPIB_UERR	Multi Bit uncorrectable error indication for
		MIBSPI-B muti-buffer
51	MSS_MCANA_SERR	Single Bit correctable error indication for MCANA Message Memory
50	MSS_MCANA_UERR	Multi Bit uncorrectable error indication for MCANA Message Memory
49	MSS_MCANA_TS_ERR	MCANA Timestamping Error
48	MSS_MCANB_SERR	Single Bit correctable error indication for MCANB Message Memory
47	MSS_MCANB_UERR	Multi Bit uncorrectable error indication for MCANB Message Memory

Copyright © 2025 Texas Instruments Incorporated

Table 9-4. Main Subsystem ESM Interrupt Map Group 1 (continued)

ESM GROUP1	Define Name	Description
46	MSS_MCANB_TS_ERR	MCANB Timestamping Error
45	PAD_NERROR_IN	Reserved
44	MSS_TCMA_CR5A_SERR	Single Bit correctable error indication for ATCM of CR5A
43	MSS_TCMB1_CR5A_SERR	Single Bit correctable error indication for B1TCM of CR5A
42	MSS_TCMB0_CR5A_SERR	Single Bit correctable error indication for B0TCM of CR5A
41	MSS_TCMA_CR5B_SERR	Single Bit correctable error indication for ATCM of CR5B
40	MSS_TCMB1_CR5B_SERR	Single Bit correctable error indication for B1TCM of CR5B
39	MSS_TCMB0_CR5B_SERR	Single Bit correctable error indication for B0TCM of CR5B
38	MSS_CR5A_ITAG_SERR	Single Bit correctable error indication for Cache ITAG of CR5A
37	MSS_CR5A_IDATA_SERR	Single Bit correctable error indication for Cache IDATA of CR5A
36	MSS_CR5A_DTAG_SERR	Single Bit correctable error indication for Cache DTAG of CR5A
35	MSS_ CR5A _DDATA_ SERR	Single Bit correctable error indication for Cache DDATA of CR5A
34	MSS_CR5B_ITAG_SERR	Single Bit correctable error indication for Cache ITAG of CR5B
33	MSS_CR5B_IDATA_SERR	Single Bit correctable error indication for Cache IDATA of CR5B
32	MSS_CR5B_DTAG_SERR	Single Bit correctable error indication for Cache DTAG of CR5B
31	MSS_ CR5B _DDATA_ SERR	Single Bit correctable error indication for Cache DDATA of CR5B
30	MSS_TPCC_A_AGG_ERR	MSS_TPCC_A Aggregated Error Interrupt
		- TPCC Error
		- TPCC MPU Error
		- TPTC Error for all TPTCs connected to TPCC
		- Read and Write Config Space Access error to TPCC
		- Read and Write Config Space Access error or all TPTCs connected to TPCC
29	MSS_TPCC_B_AGG_ERR	MSS_TPCC_B Aggregated Error Interrupt
		- TPCC Error
		- TPCC MPU Error
		- TPTC Error for all TPTCs connected to TPCC
		- Read and Write Config Space Access error to TPCC
		- Read and Write Config Space Access error or all TPTCs connected to TPCC
28	RESERVED	RESERVED
27	EFUSE_ERR	Reserved for efuse errors
26	MSS_STC_ERR	STC Error indication for MSS Cortexr5ss
25	MSS_CCMR5_ST_ERR	CORTEXR5-Sub System Self test error for CCMR5 (comparator module)

Copyright © 2025 Texas Instruments Incorporated

Table 9-4. Main Subsystem ESM Interrupt Map Group 1 (continued)

ESM GROUP1	Define Name	Description
24	RESERVED	RESERVED
23	QSPI_WR_ERR	QSPI write error
22	MSS_ECC_AGGR_CR5A_SERR	MSS ECC AGGR for CR5A Memories Correctbale Error
		- MSS_VIM_CR5A
		- MSS_CR5A_CACHES (only for injection. Error is sent out through event bus)
		- MSS_CR5A_TCMs (only for injection. Error is sent out through event bus)
21	RESERVED	RESERVED
20	MSS_ECC_AGGR_CR5B_SERR	MSS ECC AGGR for CR5B Memories Correctbale Error
		- MSS_VIM_CR5B
		- MSS_CR5B_CACHES (only for injection. Error is sent out through event bus)
		- MSS_CR5B_TCMs (only for injection. Error is sent out through event bus)
19	RESERVED	RESERVED
18	MSS_ECC_AGGR_SERR	MSS ECC AGGR Correctbale Error
		- MSS_L2_BANKA/B
		- MSS_MBOX
		- MSS_RETRAM
		- MSS_GPADC
		- MSS_TPTC_A0/1 FIFO
		- MSS_TPTC_B0 FIFO
17	MSS_ECC_AGGR_UERR	MSS ECC AGGR Un-Correctbale Error
		- MSS_L2_BANKA/B
		- MSS_MBOX
		- MSS_RETRAM
		- MSS_GPADC
		- MSS_TPTC_A0/1 FIFO
		- MSS_TPTC_B0 FIFO
14 to 16	RESERVED	RESERVED
13	DSS_ESM_LO	ESM IRQ from Gem
12	DSS_ESM_HI	ESM FIQ from Gem
4 to 11	RESERVED	RESERVED
3	BSS_ESM_LO	ESM IRQ from BSS
2	BSS_ESM_HI	ESM FIQ from BSS
1	HSM_ESM_LO	ESM IRQ from HSM
0	HSM_ESM_HI	ESM FIQ from HSM

Table 9-5. Main Subsystem ESM Interrupt Map Group 2

ESM GROUP2	Define Name	Description
31 to 28	RESERVED	RESERVED
27	MSS_DCCA_ERR	DCCA Frequency comparison error
26	BSS_ESM_HI	ESM FIQ from BSS

Copyright © 2025 Texas Instruments Incorporated

Table 9-5. Main Subsystem ESM Interrupt Map Group 2 (continued)

ESM GROUP2	Define Name	Description
25	ANA_WU_AND_CLK_STATUS_ERR	Aggregated Error from ANA_WU_STATUS_REG and ANA_CLK_STATUS_REG
24	MSS_BUS_SAFETY_CR5A_MST_RD	MSS Bus Safety Error for the Node MSSS_BUS_SAFETY_(X)
		- ECC Uncorrectable Data Error
		- Compare Error on Control
23	MSS_BUS_SAFETY_CR5B_MST_RD	MSS Bus Safety Error for the Node MSSS_BUS_SAFETY_(X)
		- ECC Uncorrectable Data Error
		- Compare Error on Control
22	MSS_BUS_SAFETY_CR5A_MST_WR	MSS Bus Safety Error for the Node MSSS_BUS_SAFETY_(X)
		- ECC Uncorrectable Data Error
		- Compare Error on Control
21	MSS_BUS_SAFETY_CR5B_MST_WR	MSS Bus Safety Error for the Node MSSS_BUS_SAFETY_(X)
		- ECC Uncorrectable Data Error
		- Compare Error on Control
20	MSS_BUS_SAFETY_L2_BANKA	MSS Bus Safety Error for the Node MSSS_BUS_SAFETY_(X)
		- ECC Uncorrectable Data Error
		- Compare Error on Control
19	MSS_BUS_SAFETY_L2_BANKB	MSS Bus Safety Error for the Node MSSS_BUS_SAFETY_(X)
		- ECC Uncorrectable Data Error
		- Compare Error on Control
18	MSS_BUS_SAFETY_PCRA	MSS Bus Safety Error for the Node MSSS_BUS_SAFETY_(X)
		- ECC Uncorrectable Data Error
		- Compare Error on Control
17	MSS_BUS_SAFETY_PCRB	MSS Bus Safety Error for the Node MSSS_BUS_SAFETY_(X)
		- ECC Uncorrectable Data Error
		- Compare Error on Control
16	MSS_ECC_AGGR_CR5A_UERR	MSS ECC AGGR for CR5A Memories Un-Correctbale Error
		- MSS_VIM_CR5A
		- MSS_CR5A_CACHES (only for injection. Error is sent out through event bus)
		- MSS_CR5A_TCMs (only for injection. Error is sent out through event bus)
15	MSS_ECC_AGGR_CR5B_UERR	MSS ECC AGGR for CR5A Memories Un-Correctbale Error
		- MSS_VIM_CR5A
		- MSS_CR5A_CACHES (only for injection. Error is sent out through event bus)
		- MSS_CR5A_TCMs (only for injection. Error is sent out through event bus)
14	MSS_L2_BANKA_ECC_UERR	MSS_L2_BANKA Uncorrectable ECC Error

Copyright © 2025 Texas Instruments Incorporated

Table 9-5. Main Subsystem ESM Interrupt Map Group 2 (continued)

ESM GROUP2	Define Name	Description
13	MSS_L2_BANKB_ECC_UERR	MSS_L2_BANKB Uncorrectable ECC Error
12	VIM_LOCK_ERR	MSS_VIM lock step compare error
11	MSS_WDT_NMI	MSS Watch dog timer non maskable irq
10	MSS_CR5A_LIVELOCK	MSS_CR5A in live lock due to fatal errors
9	MSS_CR5B_LIVELOCK	MSS_CR5B in live lock due to fatal errors
8	MSS_TCMB1_CR5B_PARITY_ERR	Parity Error on Control signals for B1TCM of CR5B
7	MSS_TCMB0_CR5B_PARITY_ERR	Parity Error on Control signals for B0TCM of CR5B
6	MSS_TCMA_CR5B_PARITY_ERR	Parity Error on Control signals for ATCM of CR5B
5	MSS_TCMB1_CR5A_PARITY_ERR	Parity Error on Control signals for B1TCM of CR5A
4	MSS_TCMB0_CR5A_PARITY_ERR	Parity Error on Control signals for B0TCM of CR5A
3	MSS_TCMA_CR5A_PARITY_ERR	Parity Error on Control signals for ATCM of CR5A
2	MSS_CCMR5_ERR	Lock step Comparision Error from CCMR5
1	DSS_ESM_HI	ESM FIQ from DSP
0	HSM_ESM_HI	ESM FIQ from HSM

Table 9-6. MSS R5F ESM Interrupt Map

ESM GROUP3	Define Name	Description
31	RESERVED	RESERVED
30	RESERVED	RESERVED
29	MSS_CR5B_DDATA_UERR	Dcache data multibit error from CR5B
28	RESERVED	RESERVED
27	MSS_CR5B_DTAG_UERR	Dcache tag multibit error from CR5B
26	RESERVED	RESERVED
25	RESERVED	RESERVED
24	RESERVED	RESERVED
23	RESERVED	RESERVED
22	RESERVED	RESERVED
21	MSS_CR5A_DDATA_UERR	Dcache data multibit error from CR5A
20	RESERVED	RESERVED
19	MSS_CR5A_DTAG_UERR	Dcache tag multibit error from CR5A
18	RESERVED	RESERVED
17	RESERVED	RESERVED
16	RESERVED	RESERVED
15	RESERVED	RESERVED
14	RESERVED	RESERVED
13	MSS_TCMA_CR5B_UERR	Multi Bit Error in ATCM of CR5B
12	RESERVED	RESERVED
11	MSS_TCMB1_CR5B_UERR	Multi Bit Error in B1TCM of CR5B
10	RESERVED	RESERVED
9	MSS_TCMB0_CR5B_UERR	Multi Bit Error in B0TCM of CR5B
8	RESERVED	RESERVED

Copyright © 2025 Texas Instruments Incorporated

Table 9-6. MSS R5F ESM Interrupt Map (continued)

ESM GROUP3	Define Name	Description
7	MSS_TCMA_CR5A_UERR	Multi Bit Error in ATCM of CR5A
6	RESERVED	RESERVED
5	MSS_TCMB1_CR5A_UERR	Multi Bit Error in B1TCM of CR5A
4	RESERVED	RESERVED
3	MSS_TCMB0_CR5A_UERR	Multi Bit Error in B0TCM of CR5A
2	RESERVED	RESERVED
1	EFUSE_AUTOLOAD_ERR	Reserved for efuse autoload error
0	RESERVED	RESERVED

9.5 DSP Subsystem ESM Interrupt Map

Table 9-7. DSP Subsystem ESM Interrupt Map

ESM GROUP1	Define Name	Description
0	DSS_TPCC_A_ERRAGG	DSS_TPCC_A Aggregated Error Interrupt
		- TPCC Error
		- TPCC MPU Error
		- TPTC Error for all TPTCs connected to TPCC
		- Read and Write Config Space Access error to TPCC
		- Read and Write Config Space Access error or all TPTCs connected to TPCC
1	DSS_TPCC_B_ERRAGG	DSS_TPCC_B Aggregated Error Interrupt
		- TPCC Error
		- TPCC MPU Error
		- TPTC Error for all TPTCs connected to TPCC
		- Read and Write Config Space Access error to TPCC
		- Read and Write Config Space Access error or all TPTCs connected to TPCC
2	DSS_TPCC_C_ERRAGG	DSS_TPCC_C Aggregated Error Interrupt
		- TPCC Error
		- TPCC MPU Error
		- TPTC Error for all TPTCs connected to TPCC
		- Read and Write Config Space Access error to TPCC
		- Read and Write Config Space Access error or all TPTCs connected to TPCC
3	DSS_DSP_L1P_PARITY	DSS DSP L1 Parity Error
4	DSS_DSP_L2_SEC_ERR	DSS DSP L2 Single Bit Error
5	DSS_DSP_EDC_SEC_ERR	DSS DSP Error Decetion Single Bit Error
6	DSS_DSP_L2_DED_ERR	DSS DSP L2 Double Bit Error
7	DSS_DSP_EDC_DED_ERR	DSS DSP Error Decetion Double Bit Error
8	RESERVED	
9	DSS_CM4_STC_ERR	DSS_CM4_STC Error
10	DSS_DSP_STC_ERR	DSS_DSP_STC Error
11	DSS_CBUFF_SBE_ERR	DSS_CBUFF FIFO Single Bit error

Copyright © 2025 Texas Instruments Incorporated

Table 9-7. DSP Subsystem ESM Interrupt Map (continued)

ESM GROUP1	Define Name	Description
12	DSS_CBUFF_DBE_ERR	DSS_CBUFF FIFO Double Bit error
13	DSS_CBUFF_SAFETY_ERR	DSS_CBUFF Safety error
14	DSS_DSP_PBIST_ERR	DSS_DSP PBIST Error
15	DSS_BUS_SAFETY_SEC_ERRAGG	DSS Bus Safety Single Error Correction Error Aggregated Interrupt. SW must read the register DSS_CTRL:DSS_BUS_SAFETY_SEC_ERR_STAT0 and DSS_CTRL:DSS_BUS_SAFETY_SEC_ERR_STAT1
16	RESERVED	RESERVED
17	RESERVED	RESERVED
18	RCSS_BUS_SAFETY_CQMEM_WR	RCSS Bus Safety Error for the Node RCSS_BUS_SAFETY_(X) - ECC Uncorrectable Data Error - Compare Error on Control
19	RCSS_BUS_SAFETY_CQMEM_RD	RCSS Bus Safety Error for the Node RCSS_BUS_SAFETY_(X) - ECC Uncorrectable Data Error - Compare Error on Control
20	RCSS_BUS_SAFETY_SEC_ERRAGG	RCSS Bus Safety Single Error Correction Error Aggregated Interrupt.SW must read the register RCSS_CTRL:RCSS_BUS_SAFETY_SEC_ERR_STAT0
21	RCSS_BUS_SAFETY_TPTC_A0_RD	RCSS Bus Safety Error for the Node RCSS_BUS_SAFETY_(X) - ECC Uncorrectable Data Error - Compare Error on Control
22	RCSS_BUS_SAFETY_ADCBUF_RD	RCSS Bus Safety Error for the Node RCSS_BUS_SAFETY_(X) - ECC Uncorrectable Data Error - Compare Error on Control
23	RCSS_BUS_SAFETY_TPTC_A0_WR	RCSS Bus Safety Error for the Node RCSS_BUS_SAFETY_(X) - ECC Uncorrectable Data Error - Compare Error on Control
24	RCSS_BUS_SAFETY_ADCBUF_WR	RCSS Bus Safety Error for the Node RCSS_BUS_SAFETY_(X) - ECC Uncorrectable Data Error - Compare Error on Control
25	RCSS_BUS_SAFETY_CSI2A_MDMA	RCSS Bus Safety Error for the Node RCSS_BUS_SAFETY_(X) - ECC Uncorrectable Data Error - Compare Error on Control
26	RCSS_BUS_SAFETY_BSS_MST	RCSS Bus Safety Error for the Node RCSS_BUS_SAFETY_(X) - ECC Uncorrectable Data Error - Compare Error on Control

Copyright © 2025 Texas Instruments Incorporated

Table 9-7. DSP Subsystem ESM Interrupt Map (continued)

ESM GROUP1	Define Name	Description
27	RSS_BUS_SAFETY_DSS2RSS	RSS Bus Safety Error for the Node RSS_BUS_SAFETY_(X) - ECC Uncorrectable Data Error - Compare Error on Control
28	RSS_BUS_SAFETY_MSS2RSS	RSS Bus Safety Error for the Node RSS_BUS_SAFETY_(X) - ECC Uncorrectable Data Error - Compare Error on Control
29	RESERVED	RESERVED
30	RCSS_BUS_SAFETY_BSS_SLV	RCSS Bus Safety Error for the Node RCSS_BUS_SAFETY_(X) - ECC Uncorrectable Data Error - Compare Error on Control
31	RCSS_BUS_SAFETY_STATIC_MEM	RCSS Bus Safety Error for the Node RCSS_BUS_SAFETY_(X) - ECC Uncorrectable Data Error - Compare Error on Control
32	MPU_DSS_L3_BANKA_ADDR_ERR	MPU Addressing Error for DSS_(X)_MPU_ADDR_ERR
33	MPU_DSS_L3_BANKB_ADDR_ERR	MPU Addressing Error for DSS_(X)_MPU_ADDR_ERR
34	MPU_DSS_L3_BANKC_ADDR_ERR	MPU Addressing Error for DSS_(X)_MPU_ADDR_ERR
35	MPU_DSS_L3_BANKD_ADDR_ERR	MPU Addressing Error for DSS_(X)_MPU_ADDR_ERR
36	MPU_DSS_HWA_DMA0_ADDR_ERR	MPU Addressing Error for DSS_(X)_MPU_ADDR_ERR
37	MPU_DSS_HWA_DMA1_ADDR_ERR	MPU Addressing Error for DSS_(X)_MPU_ADDR_ERR
38	MPU_DSS_HWA_PROC_ADDR_ERR	MPU Addressing Error for DSS_(X)_MPU_ADDR_ERR
39	MPU_DSS_MBOX_MPU_ADDR_ERR	MPU Addressing Error for DSS_(X)_MPU_ADDR_ERR
40	MPU_DSS_L3_BANKA_PROT_ERR	MPU Protection Error for DSS_(X)_MPU_PROT_ERR
41	MPU_DSS_L3_BANKB_PROT_ERR	MPU Protection Error for DSS_(X)_MPU_PROT_ERR
42	MPU_DSS_L3_BANKC_PROT_ERR	MPU Protection Error for DSS_(X)_MPU_PROT_ERR
43	MPU_DSS_L3_BANKD_PROT_ERR	MPU Protection Error for DSS_(X)_MPU_PROT_ERR
44	MPU_DSS_HWA_DMA0_PROT_ERR	MPU Protection Error for DSS_(X)_MPU_PROT_ERR
45	MPU_DSS_HWA_DMA1_PROT_ERR	MPU Protection Error for DSS_(X)_MPU_PROT_ERR
46	MPU_DSS_HWA_PROC_PROT_ERR	MPU Protection Error for DSS_(X)_MPU_PROT_ERR
47	MPU_DSS_MBOX_MPU_PROT_ERR	MPU Protection Error for DSS_(X)_MPU_PROT_ERR

Copyright © 2025 Texas Instruments Incorporated

Table 9-7. DSP Subsystem ESM Interrupt Map (continued)

ESM GROUP1	Define Name	Description
48	DSS_BUS_SAFETY_DSP_MDMA	DSS Bus Safety Error for the Node RCSS_BUS_SAFETY_(X) - ECC Uncorrectable Data Error - Compare Error on Control
49	DSS_BUS_SAFETY_L3_BANKA	DSS Bus Safety Error for the Node RCSS_BUS_SAFETY_(X) - ECC Uncorrectable Data Error - Compare Error on Control
50	DSS_BUS_SAFETY_L3_BANKB	DSS Bus Safety Error for the Node RCSS_BUS_SAFETY_(X) - ECC Uncorrectable Data Error - Compare Error on Control
51	DSS_BUS_SAFETY_L3_BANKC	DSS Bus Safety Error for the Node RCSS_BUS_SAFETY_(X) - ECC Uncorrectable Data Error - Compare Error on Control
52	DSS_BUS_SAFETY_L3_BANKD	DSS Bus Safety Error for the Node RCSS_BUS_SAFETY_(X) - ECC Uncorrectable Data Error - Compare Error on Control
53	DSS_BUS_SAFETY_DSP_SDMA	DSS Bus Safety Error for the Node RCSS_BUS_SAFETY_(X) - ECC Uncorrectable Data Error - Compare Error on Control
54	DSS_BUS_SAFETY_TPTC_A0_RD	DSS Bus Safety Error for the Node RCSS_BUS_SAFETY_(X) - ECC Uncorrectable Data Error - Compare Error on Control
55	DSS_BUS_SAFETY_TPTC_A1_RD	DSS Bus Safety Error for the Node RCSS_BUS_SAFETY_(X) - ECC Uncorrectable Data Error - Compare Error on Control
56	DSS_BUS_SAFETY_TPTC_B0_RD	DSS Bus Safety Error for the Node RCSS_BUS_SAFETY_(X) - ECC Uncorrectable Data Error - Compare Error on Control
57	DSS_BUS_SAFETY_TPTC_B1_RD	DSS Bus Safety Error for the Node RCSS_BUS_SAFETY_(X) - ECC Uncorrectable Data Error - Compare Error on Control
58	DSS_BUS_SAFETY_TPTC_C0_RD	DSS Bus Safety Error for the Node RCSS_BUS_SAFETY_(X) - ECC Uncorrectable Data Error - Compare Error on Control
59	DSS_BUS_SAFETY_TPTC_C1_RD	DSS Bus Safety Error for the Node RCSS_BUS_SAFETY_(X) - ECC Uncorrectable Data Error - Compare Error on Control

Copyright © 2025 Texas Instruments Incorporated

Table 9-7. DSP Subsystem ESM Interrupt Map (continued)

ESM GROUP1	Define Name	Description
60	DSS_BUS_SAFETY_TPTC_C2_RD	DSS Bus Safety Error for the Node RCSS_BUS_SAFETY_(X)
		- ECC Uncorrectable Data Error
		- Compare Error on Control
61	DSS_BUS_SAFETY_TPTC_C3_RD	DSS Bus Safety Error for the Node RCSS_BUS_SAFETY_(X)
		- ECC Uncorrectable Data Error
		- Compare Error on Control
62	DSS_BUS_SAFETY_TPTC_C4_RD	DSS Bus Safety Error for the Node RCSS_BUS_SAFETY_(X)
		- ECC Uncorrectable Data Error
		- Compare Error on Control
63	DSS_BUS_SAFETY_TPTC_C5_RD	DSS Bus Safety Error for the Node RCSS_BUS_SAFETY_(X)
		- ECC Uncorrectable Data Error
		- Compare Error on Control
64	DSS_BUS_SAFETY_TPTC_A0_WR	DSS Bus Safety Error for the Node RCSS_BUS_SAFETY_(X)
		- ECC Uncorrectable Data Error
		- Compare Error on Control
65	DSS_BUS_SAFETY_TPTC_A1_WR	DSS Bus Safety Error for the Node RCSS_BUS_SAFETY_(X)
		- ECC Uncorrectable Data Error
		- Compare Error on Control
66	DSS_BUS_SAFETY_TPTC_B0_WR	DSS Bus Safety Error for the Node RCSS_BUS_SAFETY_(X)
		- ECC Uncorrectable Data Error
		- Compare Error on Control
67	DSS_BUS_SAFETY_TPTC_B1_WR	DSS Bus Safety Error for the Node RCSS_BUS_SAFETY_(X)
		- ECC Uncorrectable Data Error
		- Compare Error on Control
68	DSS_BUS_SAFETY_TPTC_C0_WR	DSS Bus Safety Error for the Node RCSS_BUS_SAFETY_(X)
		- ECC Uncorrectable Data Error
		- Compare Error on Control
69	DSS_BUS_SAFETY_TPTC_C1_WR	DSS Bus Safety Error for the Node RCSS_BUS_SAFETY_(X)
		- ECC Uncorrectable Data Error
		- Compare Error on Control
70	DSS_BUS_SAFETY_TPTC_C2_WR	DSS Bus Safety Error for the Node RCSS_BUS_SAFETY_(X)
		- ECC Uncorrectable Data Error
		- Compare Error on Control
71	DSS_BUS_SAFETY_TPTC_C3_WR	DSS Bus Safety Error for the Node RCSS_BUS_SAFETY_(X)
		- ECC Uncorrectable Data Error
		- Compare Error on Control

Copyright © 2025 Texas Instruments Incorporated

Table 9-7. DSP Subsystem ESM Interrupt Map (continued)

ESM GROUP1	Define Name	Description
72	DSS_BUS_SAFETY_TPTC_C4_WR	DSS Bus Safety Error for the Node RCSS_BUS_SAFETY_(X)
		- ECC Uncorrectable Data Error
		- Compare Error on Control
73	DSS_BUS_SAFETY_TPTC_C5_WR	DSS Bus Safety Error for the Node RCSS_BUS_SAFETY_(X)
		- ECC Uncorrectable Data Error
		- Compare Error on Control
74	DSS_BUS_SAFETY_CMC_COMP	DSS Bus Safety Error for the Node RCSS_BUS_SAFETY_(X)
		- ECC Uncorrectable Data Error
		- Compare Error on Control
75	DSS_BUS_SAFETY_MCRC	DSS Bus Safety Error for the Node RCSS_BUS_SAFETY_(X)
		- ECC Uncorrectable Data Error
		- Compare Error on Control
76	DSS_BUS_SAFETY_PCR	DSS Bus Safety Error for the Node RCSS_BUS_SAFETY_(X)
		- ECC Uncorrectable Data Error
		- Compare Error on Control
77	DSS_BUS_SAFETY_CBUFF	DSS Bus Safety Error for the Node RCSS_BUS_SAFETY_(X)
		- ECC Uncorrectable Data Error
		- Compare Error on Control
78	DSS_BUS_SAFETY_HWA_DMA0	DSS Bus Safety Error for the Node RCSS_BUS_SAFETY_(X)
		- ECC Uncorrectable Data Error
		- Compare Error on Control
79	DSS_BUS_SAFETY_HWA_DMA1	DSS Bus Safety Error for the Node RCSS_BUS_SAFETY_(X)
		- ECC Uncorrectable Data Error
		- Compare Error on Control
80	DSS_BUS_SAFETY_HWA_PROCM	DSS Bus Safety Error for the Node RCSS_BUS_SAFETY_(X)
		- ECC Uncorrectable Data Error
		- Compare Error on Control
81	DSS_BUS_SAFETY_HWA_PROCS	DSS Bus Safety Error for the Node RCSS_BUS_SAFETY_(X)
		- ECC Uncorrectable Data Error
		- Compare Error on Control
82	DSS_BUS_SAFETY_MBOX	DSS Bus Safety Error for the Node RCSS_BUS_SAFETY_(X)
		- ECC Uncorrectable Data Error
		- Compare Error on Control
83	RCSS_BUS_SAFETY_MBOX	RCSS Bus Safety Error for the Node RCSS_BUS_SAFETY_(X)
		- ECC Uncorrectable Data Error
		- Compare Error on Control

Copyright © 2025 Texas Instruments Incorporated

Table 9-7. DSP Subsystem ESM Interrupt Map (continued)

ESM GROUP1	Define Name	Description
84	RCSS_BUS_SAFETY_PCR	RCSS Bus Safety Error for the Node RCSS_BUS_SAFETY_(X)
		- ECC Uncorrectable Data Error
		- Compare Error on Control
85	RCSS_TPCC_A_ERRAGG	RCSS_TPCC_A Aggregated Error Interrupt
		- TPCC Error
		- TPCC MPU Error
		- TPTC Error for all TPTCs connected to TPCC
		- Read and Write Config Space Access error to TPCC
		- Read and Write Config Space Access error or all TPTCs connected to TPCC
86	RESERVED	RESERVED
87	RCSS_CSI2A_CTX_MEM_PARITY_ERR	RCSS CSI2A CTX Memory Parity Error
88	RCSS_CSI2A_FIFO_MEM_PARITY_ERR	RCSS CSI2A FIFO Memory Parity Error
89	RESERVED	RESERVED
90	RESERVED	RESERVED
91	DSS_ECC_AGGR_UERR	DSS ECC AGGR Un-Correctbale Error
		- DSS_MBOX
		- DSS_L3_BANKA/B/C/D
		- DSS_TPTC_A0/1 FIFO
		- DSS_TPTC_B0/1 FIFO
		- DSS_TPTC_C0/1/2/3/4/5 FIFO
		- RCSS_TPTC_A0/1
92	DSS_ECC_AGGR_SERR	DSS ECC AGGR Correctbale Error
		- DSS_MBOX
		- DSS_L3_BANKA/B/C/D
		- DSS_TPTC_A0/1 FIFO
		- DSS_TPTC_B0/1 FIFO
		- DSS_TPTC_C0/1/2/3/4/5 FIFO
		- RCSS_TPTC_A0/1
93	DSS_HWA_GRP1_ERR	NU
94	RSS_ECC_AGG_SERR	SEC error from ECC-AGGREGATOR which controls ADC_BUF_Memories and TPTC-memories
95	RSS_ECC_AGG_UERR	DED error from ECC-AGGREGATOR which controls ADC_BUF_Memories and TPTC-memories
96	RESERVED	RESERVED
97	DSS_L3_BANKA_ECC_UERR	DSS_L3_BANKA Uncorrectable ECC Error
98	DSS_L3_BANKB_ECC_UERR	DSS_L3_BANKB Uncorrectable ECC Error
99	DSS_L3_BANKC_ECC_UERR	DSS_L3_BANKC Uncorrectable ECC Error
100	DSS_L3_BANKD_ECC_UERR	DSS_L3_BANKD Uncorrectable ECC Error
101	DSS_DSP_L2_PARITY_ERR_VB0_EVEN	DSS DSP L2 Parity Error from Virtual Bank 0 Even Bank
102	DSS_DSP_L2_PARITY_ERR_VB0_ODD	DSS DSP L2 Parity Error from Virtual Bank 0 Even Odd

Copyright © 2025 Texas Instruments Incorporated

Table 9-7. DSP Subsystem ESM Interrupt Map (continued)

ESM GROUP1	Define Name	Description
103	DSS_DSP_L2_PARITY_ERR_VB1_EVEN	DSS DSP L2 Parity Error from Virtual Bank 1 Even Bank
104	DSS_DSP_L2_PARITY_ERR_VB1_ODD	DSS DSP L2 Parity Error from Virtual Bank 1 Even Odd
105	DSS_DSP_L2_PARITY_ERR_VB2_EVEN	DSS DSP L2 Parity Error from Virtual Bank 2 Even Bank
106	DSS_DSP_L2_PARITY_ERR_VB2_ODD	DSS DSP L2 Parity Error from Virtual Bank 2 Even Odd
107	DSS_DSP_L2_PARITY_ERR_VB3_EVEN	DSS DSP L2 Parity Error from Virtual Bank 3 Even Bank
108	DSS_DSP_L2_PARITY_ERR_VB3_ODD	DSS DSP L2 Parity Error from Virtual Bank 3 Even Odd
109	DSS_BUS_SAFETY_CMC_UCOMP0	DSS Bus Safety Error for the Node RCSS_BUS_SAFETY_(X)
		- ECC Uncorrectable Data Error
		- Compare Error on Control
110	DSS_BUS_SAFETY_CMC_UCOMP1	DSS Bus Safety Error for the Node RCSS_BUS_SAFETY_(X)
		- ECC Uncorrectable Data Error
		- Compare Error on Control
111	DSS_BUS_SAFETY_CMC_UCOMP2	DSS Bus Safety Error for the Node RCSS_BUS_SAFETY_(X)
		- ECC Uncorrectable Data Error
		- Compare Error on Control
112	DSS_BUS_SAFETY_CMC_UCOMP3	DSS Bus Safety Error for the Node RCSS_BUS_SAFETY_(X)
		- ECC Uncorrectable Data Error
		- Compare Error on Control
113	DSS_L3BANKA_ACCESS_ERR	
114	DSS_L3BANKB_ACCESS_ERR	
115	DSS_L3BANKC_ACCESS_ERR	
116	DSS_L3BANKD_ACCESS_ERR	
117	BSS_ESM_LO	ESM IRQ from BSS
118	BSS_ESM_HI	ESM FIQ from BSS
119	RSS_MPU_DSS2RSS_ADDR_ERR	MPU Addressing Error for RSS_MPU_(X)_ADDR_ERR
120	RSS_MPU_DSS2RSS_PROT_ERR	MPU Protection Error for RSS_MPU_(X)_ADDR_ERR
121	RSS_MPU_MSS2RSS_ADDR_ERR	MPU Addressing Error for RSS_MPU_(X)_ADDR_ERR
122	RSS_MPU_MSS2RSS_PROT_ERR	MPU Protection Error for RSS_MPU_(X)_ADDR_ERR
123	MSS_BUS_SAFETY_DSS2RSS	DSS Bus Safety Error for the Node DSS_BUS_SAFETY_(X) - ECC Uncorrectable Data Error - Compare Error on Control

Copyright © 2025 Texas Instruments Incorporated

Table 9-7. DSP Subsystem ESM Interrupt Map (continued)

ESM GROUP1	Define Name	Description
124	MSS_BUS_SAFETY_RSS2DSS	DSS Bus Safety Error for the Node DSS_BUS_SAFETY_(X) - ECC Uncorrectable Data Error - Compare Error on Control

Table 9-8. DSP Subsystem ESM Interrupt Map 2

ESM GROUP2	Define Name	Description
0	DSS_WDT_NMI_REQ	DSS_WDT Non Maskable Interrupt
1	DSS_DCCA_ERR	DSS_DCCA Error
2	DSS_DCCB_ERR	DSS_DCCB Error
3	DSS_HWA_GRP2_ERR	DSS HWA Group 2 Errors.
		- Parity error for any local memory banks (8 banks each of 16KB memory)
		- Parity error for Windowing RAM
		- HWA FSM lockstep error
4	DSS_DSP_L2_PARITY_ERR_VB0_EVEN	DSS DSP L2 Parity Error from Virtual Bank 0 Even Bank
5	DSS_DSP_L2_PARITY_ERR_VB0_ODD	DSS DSP L2 Parity Error from Virtual Bank 0 Even Odd
6	DSS_DSP_L2_PARITY_ERR_VB1_EVEN	DSS DSP L2 Parity Error from Virtual Bank 1 Even Bank
7	DSS_DSP_L2_PARITY_ERR_VB1_ODD	DSS DSP L2 Parity Error from Virtual Bank 1 Even Odd
8	DSS_DSP_L2_PARITY_ERR_VB2_EVEN	DSS DSP L2 Parity Error from Virtual Bank 2 Even Bank
9	DSS_DSP_L2_PARITY_ERR_VB2_ODD	DSS DSP L2 Parity Error from Virtual Bank 2 Even Odd
10	DSS_DSP_L2_PARITY_ERR_VB3_EVEN	DSS DSP L2 Parity Error from Virtual Bank 3 Even Bank
11	DSS_DSP_L2_PARITY_ERR_VB3_ODD	DSS DSP L2 Parity Error from Virtual Bank 3 Even Odd
12	DSS_DSP_L2_DED_ERR	DSS DSP L2 Double Bit Error
13	DSS_DSP_EDC_DED_ERR	DSS DSP Error Decetion Double Bit Error
14	BSS_ESM_HI	ESM FIQ from BSS

Copyright © 2025 Texas Instruments Incorporated

Chapter 10

Data Movement Architecture

10.1 Enhanced Direct Memory Access (EDMA)

This section describes the Enhanced Direct Memory Access (EDMA) controller. For features applicable to the EDMA instances in the device, see the device-specific Integration section. The primary purpose of the EDMA controller is to service data transfers programmed between two memory-mapped follower endpoints on the device. The EDMA controller consists of two principle blocks:

- EDMA channel controllers: EDMA_TPCC
- EDMA transfer controllers: EDMA_TPTC

Devices can have multiple instances of EDMA channel controllers, each associated with multiple EDMA transfer controllers.

The EDMA channel controller serves as the user interface for the EDMA controller. The EDMA_TPCC includes parameter RAM (PaRAM), channel control registers, and interrupt control registers. The EDMA_TPCC serves to prioritize incoming software requests or events from peripherals, and submits transfer requests (TR) to the EDMA transfer controller.

The EDMA transfer controllers are responsible for data movement. The transfer request packets (TRP) submitted by the EDMA_TPCC contain the transfer context, based on which the transfer controller issues read/write commands to the source and destination addresses programmed for a given transfer.

10.1.1 EDMA Module Overview 1750
10.1.2 EDMA Integration 1753
10.1.3 EDMA Controller Functional Description 1759
10.1.4 EDMA Transfer Examples 1808
10.1.5 EDMA Event Map 1814
10.1.6 EDMA Debug Checklist and Programming Tips 1822
10.1.7 EDMA Registers 1824

Copyright © 2025 Texas Instruments Incorporated

10.1.1 EDMA Module Overview

The enhanced direct memory access module, also called EDMA, performs high-performance data transfers between two target endpoints, memories and peripheral devices without microprocessor unit (MPU) or digital signal processor (DSP) support during transfer. EDMA transfer is programmed through a logical EDMA channel, which allows the transfer to be optimally tailored to the requirements of the application.

The EDMA controller is based on two major principal blocks:

- EDMA third-party channel controller (EDMA_TPCC)
- EDMA third-party transfer controller (EDMA_TPTC)

Figure 10-1 shows an overview of the EDMA module.

Copyright © 2025 Texas Instruments Incorporated

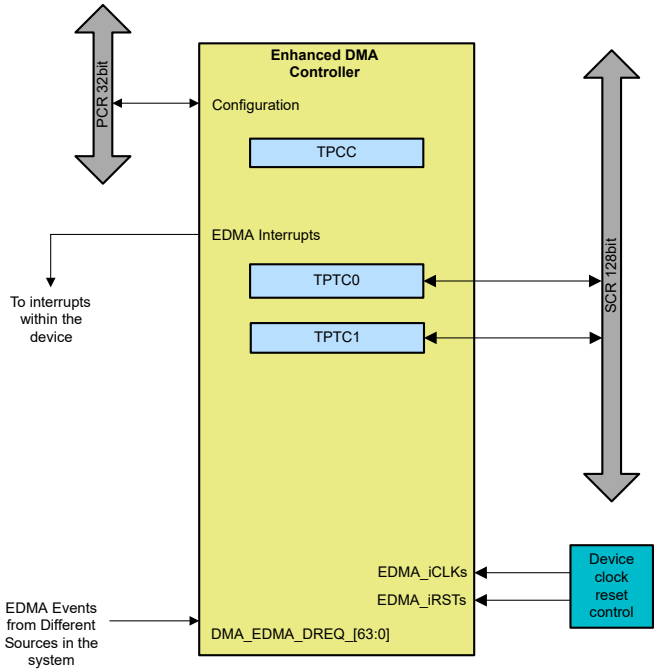

Figure 10-1. EDMA Module Overview

Copyright © 2025 Texas Instruments Incorporated

Note

When connecting to DSS, the SCR is 128 bit. When connecting to MSS and RCSS, the SCR is 64 bit.

For EDMA instances available on the device, see the device-specific integration section.

The **TPCC** is a high flexible channel controller that serves as both a user interface and an event interface for the EDMA controller. The EDMA_TPCC serves to prioritize incoming software requests or events from peripherals, and submits transfer requests (TRs) to the transfer controller.

The **TPTC** performs read and write transfers by EDMA ports to the target peripherals, as programmed in the Active and Pending set of the registers. The transfer controllers are responsible for data movement, and issue read/write commands to the source and destination addresses programmed for a given transfer in the EDMA_TPCC.

10.1.1.1 EDMA Features

This section shows generic EDMA features. For features applicable to the EDMA instances in the device, see the device-specific Integration section.

The EDMA_TPCC channel controller has the following features:

- Fully orthogonal transfer description:
  - Three transfer dimensions
  - A-synchronized transfers: one dimension serviced per event
  - AB-synchronized transfers: two dimensions serviced per event
  - Independent indexes on source and destination
  - Chaining feature allowing a 3-D transfer based on a single event.
- Flexible transfer definition:
  - Increment or FIFO transfer addressing modes
  - Linking mechanism allows automatic PaRAM set update
  - Chaining allows multiple transfers to execute with one event
- Interrupt generation for the following:
  - Transfer completion
  - Error conditions
- Debug visibility:
  - Queue water marking/threshold
  - Error and status recording to facilitate debug
- 64 DMA request channels:
  - Event synchronization
  - Manual synchronization (CPUs write to event set registers EDMA_TPCC_ESR and EDMA_TPCC_ESRH).
  - Chain synchronization (completion of one transfer triggers another transfer).
- Eight QDMA channels:
  - QDMA channels trigger automatically upon writing to a parameter RAM (PaRAM) set entry.
  - Support for programmable QDMA channel to PaRAM mapping.
- Each PaRAM set can be used for a DMA channel, QDMA channel, or link set.
- Multiple transfer controllers/event queues.
- 16 event entries per event queue.

The **EDMA_TPTC** transfer controller has the following features:

- 64-bit wide read and write ports per TC
- Supports two-dimensional transfers with independent indexes on source and destination (EDMA_TPCC manages the third dimension)
- Support for increment or constant addressing mode transfers
- Interrupt and error support
- Memory-Mapped Register (MMR) bit fields are fixed position in 32-bit MMR regardless of endianness

Copyright © 2025 Texas Instruments Incorporated

10.1.2 EDMA Integration

This section describes modules integration in the device, including information about clocks, resets, and hardware requests.

10.1.2.1 EDMA Integration in MSS

The MSS has 2 TPCCs and 3 TPTCs, as shown in Figure 10-2.

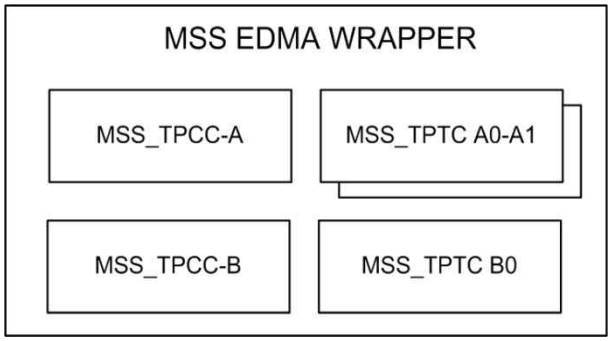

Figure 10-2. MSS EDMA Wrapper

Table 10-1 and Table 10-2 list the configuration for the TPCCs and TPTCs in the MSS.

Table 10-1. MSS TPCC Configuration

Parameters	TPCC_A	TPCC_B
DMA Ch	64	64
Param Entires	128	128
QDMA Ch	8	8
Event queues	2	2
Mem Protection	Yes	Yes
Channel Mapping	Yes	Yes
Num TCs	2	1
Num Int Ch	NA	NA
Num Regions	NA	NA

Table 10-2. MSS TPTC Configuration

Parameters	TPTCA0-A1-B0
FIFO Size	512
TR Pipe Depth	2
Bus Width	8
Read Cmd Num	8
Write Cmd Num	8
RAM ECC	1

Copyright © 2025 Texas Instruments Incorporated

10.1.2.2 EDMA Integration in DSS

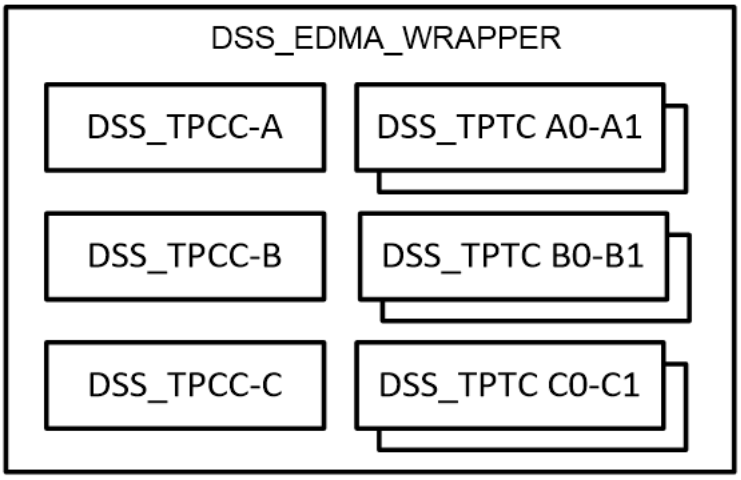

Figure 10-3. DSS EDMA Wrapper Block Diagram

The DSS has 3 TPCCs and 6 TPTCs.

Note

TPTC-C2, TPTC-C3, TPTC-C4, and TPTC-C5 modules and their functionality are not supported in this family of devices. *Any information regarding these modules has been retained in the documentation solely for the purpose of clarifying memory map read/write attributes. Features noted as "not supported" must not be used.*

Table 10-3 and Table 10-4 list the configuration for the TPCCs and TPTCs in the DSS.

Table 10-3. DSS TPCC Configuration

Parameters	TPCC_A	TPCC_B	TPCC_C
DMA Ch	64	64	64
Param Entires	128	128	256
QDMA Ch	8	8	8
Event queues	2	2	6
Mem Protection	Yes	Yes	Yes
Channel Mapping	Yes	Yes	Yes
Num TCs	2	2	2 (6)
Num Int Ch	NA	NA	NA
Num Regions	NA	NA	NA

Table 10-4. DSS TPTC Configuration

Parameters	TPTC_A[0-1]-B[0-1]-C[0-1]	TPTC_C[2-5]
FIFO Size	512	128
TR Pipe Depth	2	2
Bus Width	16	16
Read Cmd Num	8	8
Write Cmd Num	8	8

Copyright © 2025 Texas Instruments Incorporated

10.1.2.2.1 Max Burst Length

The max burst length for each TPTC can be controlled from the DSS_CTRL register space.

10.1.2.3 EDMA Error Interrupt Aggregator

The following interrupts are aggregated and sent to the processor:

- TPCC Error
- TPCC MPU Error
- TPTCs Error
- TPCC Read and Write Config Space Access Error
- TPTCs Read and Write Config Space Access Error

Table 10-5. TPCC Error Interrupt Aggregators

TPCC	Interrupt	Registers Space
MSS_TPCC_A	MSS_TPCC_A_ERRAGG	MSS_CTRL::MSS_TPCC_A_ERRAGG_MASK MSS_CTRL::MSS_TPCC_A_ERRAGG_STATUS MSS_CTRL::MSS_TPCC_A_ERRAGG_STATUS_RAW
MSS_TPCC_B	MSS_TPCC_B_ERRAGG	MSS_CTRL::MSS_TPCC_B_ERRAGG_MASK MSS_CTRL::MSS_TPCC_B_ERRAGG_STATUS MSS_CTRL::MSS_TPCC_B_ERRAGG_STATUS_RAW
DSS_TPCC_A	DSS_TPCC_A_ERRAGG	DSS_CTRL::DSS_TPCC_A_ERRAGG_MASK DSS_CTRL::DSS_TPCC_A_ERRAGG_STATUS DSS_CTRL::DSS_TPCC_A_ERRAGG_STATUS_RAW
DSS_TPCC_B	DSS_TPCC_B_ERRAGG	DSS_CTRL::DSS_TPCC_B_ERRAGG_MASK DSS_CTRL::DSS_TPCC_B_ERRAGG_STATUS DSS_CTRL::DSS_TPCC_B_ERRAGG_STATUS_RAW
DSS_TPCC_C	DSS_TPCC_C_ERRAGG	DSS_CTRL::DSS_TPCC_C_ERRAGG_MASK DSS_CTRL::DSS_TPCC_C_ERRAGG_STATUS DSS_CTRL::DSS_TPCC_C_ERRAGG_STATUS_RAW
RCSS_TPCC_A	RCSS_TPCC_A_ERRAGG	RCSS_CTRL::RCSS_TPCC_A_ERRAGG_MASK RCSS_CTRL::RCSS_TPCC_A_ERRAGG_STATUS RCSS_CTRL::RCSS_TPCC_A_ERRAGG_STATUS_RAW
HSM_TPCC_A	HSM_TPCC_A_ERRAGG	HSM_CTRL::HSM_TPCC_A_ERRAGG_MASK HSM_CTRL::HSM_TPCC_A_ERRAGG_STATUS HSM_CTRL::HSM_TPCC_A_ERRAGG_STATUS_RAW

Note

HSM TPCC and TPTC is available only for M4.

For an event to generate an interrupt to the processor, the corresponding bit field must be unmasked in TPCC_x_ERRAGG_MASK.

Copyright © 2025 Texas Instruments Incorporated

An interrupt processor can read the TPCC_x_ERRAGG_STATUS register to detect which event triggered the interrupt.

The interrupt can be cleared by writing 0x1 to the corresponding bit in TPCC_x_ERRAGG_STATUS. The software must ensure that all the aggregated interrupts are cleared so that the level interrupt is deserted before exiting the ISR. Only then is it ensured that a new pulse interrupt is generated to the processor. Thus, after clearing the software, the user should read the register to confirm a value of 0x0.

The register TPCC_x_ERRAGG_STATUS_RAW is set on an event irrespective of the value in TPCC_x_ERRAGG_MASK. This field can be cleared by writing 0x1 to the corresponding bit in TPCC_x_ERRAGG_STATUS_RAW

10.1.2.4 EDMA Functional Interrupt Aggregator

The following EDMA interrupts are aggregated and sent to the processor:

- TPCC Completion Interrupt
- TPCC Completion Region Interrupts
- TPTCs Completion Interrupt

TPCC Interrupt Aggregators lists the associated interrupt and registers for each TPCC instance

Table 10-6. TPCC Interrupt Aggregators

TPCC	Interrupt	Registers Space
MSS_TPCC_A	MSS_TPCC_A_INTAGG	MSS_CTRL::MSS_TPCC_A_INTAGG_MASK MSS_CTRL::MSS_TPCC_A_INTAGG_STATUS MSS_CTRL::MSS_TPCC_A_INTAGG_STATUS_RAW
MSS_TPCC_B	MSS_TPCC_B_INTAGG	MSS_CTRL::MSS_TPCC_B_INTAGG_MASK MSS_CTRL::MSS_TPCC_B_INTAGG_STATUS MSS_CTRL::MSS_TPCC_B_INTAGG_STATUS_RAW
DSS_TPCC_A	DSS_TPCC_A_INTAGG	DSS_CTRL::DSS_TPCC_A_INTAGG_MASK DSS_CTRL::DSS_TPCC_A_INTAGG_STATUS DSS_CTRL::DSS_TPCC_A_INTAGG_STATUS_RAW
DSS_TPCC_B	DSS_TPCC_B_INTAGG	DSS_CTRL::DSS_TPCC_B_INTAGG_MASK DSS_CTRL::DSS_TPCC_B_INTAGG_STATUS DSS_CTRL::DSS_TPCC_B_INTAGG_STATUS_RAW
DSS_TPCC_C	DSS_TPCC_C_INTAGG	DSS_CTRL::DSS_TPCC_C_INTAGG_MASK DSS_CTRL::DSS_TPCC_C_INTAGG_STATUS DSS_CTRL::DSS_TPCC_C_INTAGG_STATUS_RAW

Copyright © 2025 Texas Instruments Incorporated

Table 10-6. TPCC Interrupt Aggregators (continued)

TPCC	Interrupt	Registers Space
RCSS_TPCC_A	RCSS_TPCC_A_INTAGG	RCSS_CTRL::RCSS_TPCC_A_INTAGG_MASK RCSS_CTRL::RCSS_TPCC_A_INTAGG_STATUS RCSS_CTRL::RCSS_TPCC_A_INTAGG_STATUS_RAW
RCSS_TPCC_B	RCSS_TPCC_B_INTAGG	RCSS_CTRL::RCSS_TPCC_B_INTAGG_MASK RCSS_CTRL::RCSS_TPCC_B_INTAGG_STATUS RCSS_CTRL::RCSS_TPCC_B_INTAGG_STATUS_RAW
HSM_TPCC_A	HSM_TPCC_A_INTAGG	HSM_CTRL::HSM_TPCC_A_INTAGG_MASK HSM_CTRL::HSM_TPCC_A_INTAGG_STATUS HSM_CTRL::HSM_TPCC_A_INTAGG_STATUS_RAW

For an event to generate an interrupt to the processor, the corresponding bit field must be unmasked in TPCC_x_INTAGG_MASK.

An interrupt processor can read the TPCC_x_INTAGG_STATUS register to detect which event triggered the interrupt.

The interrupt can be cleared by writing 0x1 to the corresponding bit in TPCC_x_INTAGG_STATUS. The software must ensure that all the aggregated interrupts are cleared so that the level interrupt is deserted before exiting the ISR. Only then is it ensured that a new pulse interrupt is generated to the processor. Thus, after clearing software, the user should read the register to confirm a value of 0x0.

The register TPCC_x_INTAGG_STATUS_RAW is set on an event irrespective of the value in TPCC_x_INTAGG_MASK. This field can be cleared by writing 0x1 to the corresponding bit in TPCC_x_INTAGG_STATUS_RAW.

10.1.2.5 EDMA Configuration

- The MSS has 2 channel controllers: MSS_TPCC-A and MSS_TPCC-B.
  - MSS_TPCC-A has two transfer controllers: MSS_TPTC-A0 and MSS_TPTC-A1.
  - MSS_TPCC-B has one transfer controller MSS_TPTC-B0
- The DSS has 3 channel controllers: DSS_TPCC-A, DSS_TPCC-B and DSS_TPCC-C.
  - Each channel controller has 2 transfer controllers
- RCSS has 1 channel controller: RCSS_TPCC-A
  - RCSS_TPCC-A has two transfer controllers: RCSS_TPTC-A0 and RCSS_TPTC-A1.

Table 10-7. EDMA3 Channel Controller Configuration

Parameters	MSS_TPCC_A	MSS_TPCC_B	DSS_TPCC_A	DSS_TPCC_B	DSS_TPCC_C	RCSS_TPCC_A
DMA Channel	64	64	64	64	64	64
Param Entries	128	128	128	128	256	128
QDMA Channel	8	8	8	8	8	8
Event Queues	2	2	2	2	2	2
Mem Protection	Yes	Yes	Yes	Yes	Yes	Yes
Channel Mapping	Yes	Yes	Yes	Yes	Yes	Yes

Copyright © 2025 Texas Instruments Incorporated

Table 10-7. EDMA3 Channel Controller Configuration (continued)

Parameters	MSS_TPCC_A	MSS_TPCC_B	DSS_TPCC_A	DSS_TPCC_B	DSS_TPCC_C	RCSS_TPCC_A
Num TCs	2	1	2	2	2	2
Num Interrupt Channel	64	64	64	64	64	64
Num Regions	8	8	8	8	8	8

Table 10-8. EDMA3 Transfer Controller Configuration

Parameters	MSS_TOTCA0-A1-B0	DSS_TPTC-A[0-1]-B[0-1]-C[0-1]	RCSS_TPTC-A[0-1]
FIFO Size	512	512	512
TR Pipe Death	2	2	2
Bus Width	8	16	8
Read Cmd Num	8	8	8
Write Cmd Num	8	8	8
RAM ECC	1	Yes	Yes

Default Burst Size Configuration (DBS)

All TPTC supports four different default-burst-sizes which are configurable.

Table 10-9. Config Value to DBS Mapping

Config Value	Burst Size
2'b00	16 bytes
2'b01	32 bytes
2'b10	64 bytes
2'b11	128 bytes

Table 10-10. TPTC DBS Configuration Registers

TPTC Instance	Corresponding Register
MSS_TPTC_A<0-1>	MSS_CTRL::TPTC_DBS_CONFIG::TPTC_DBS_CONFIG_TPTC_A<0-1>
MSS_TPTC_B0	MSS_CTRL::TPTC_DBS_CONFIG::TPTC_DBS_CONFIG_TPTC_B0
DSS_TPTC_A<0-1>	DSS_CTRL::TPTC_DBS_CONFIG::TPTC_DBS_CONFIG_TPTC_A<0-1>
DSS_TPTC_B<0-1>	DSS_CTRL::TPTC_DBS_CONFIG::TPTC_DBS_CONFIG_TPTC_B<0-1>
DSS_TPTC_C<0-5>	DSS_CTRL::TPTC_DBS_CONFIG::TPTC_DBS_CONFIG_TPTC_C<0-5>
RCSS_TPTC_A<0-1>	RCSS_CTRL::TPTC_DBS_CONFIG::TPTC_DBS_CONFIG_TPTC_ A<0-1>

Copyright © 2025 Texas Instruments Incorporated

10.1.3 EDMA Controller Functional Description

This chapter discusses the architecture of the EDMA controller. The description contained in this section is generic to the EDMA module, and not all features mentioned here are supported by the device. See the EDMA integration section of the device to determine the applicability of these features.

10.1.3.1 Block Diagram

Figure 10-4 shows the functional block diagram of the EDMA controller.

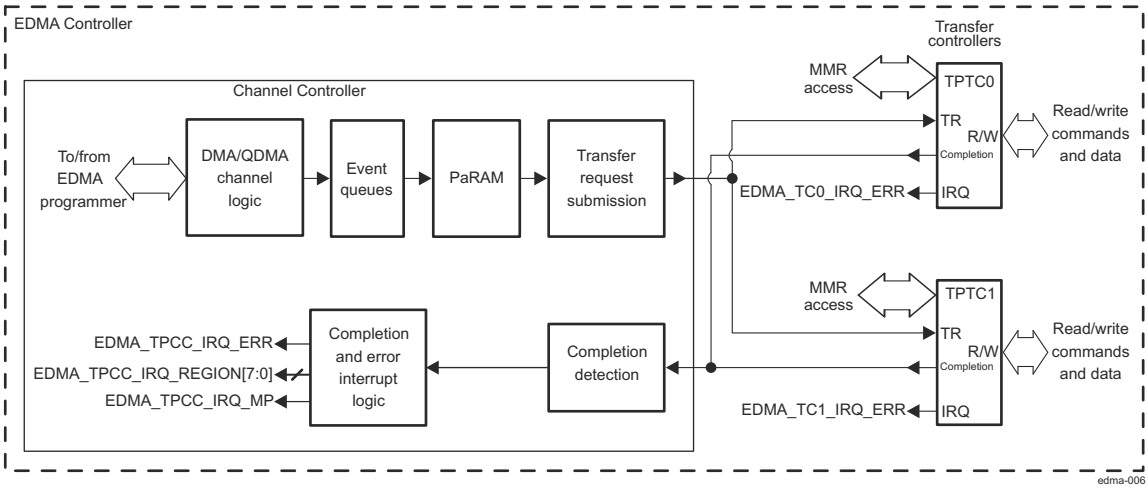

Figure 10-4. EDMA Controller Block Diagram

10.1.3.1.1 Third-Party Channel Controller

The TPCC is the EDMA transfer scheduler responsible for scheduling, arbitrating, and issuing user programmed transfers to the two TPTCs.

The functional block diagram below describes EDMA channel controller (EDMA_TPCC).

A. Although the block is depicted twice in EDMA Channel Controller Block Diagram, there is only one physical register set for the QDMA to PaRAM set mapping block.

The main blocks of the EDMA_TPCC are as follows:

- Parameter RAM (PaRAM): The PaRAM maintains parameter sets for channel and reload parameter sets. The PaRAM must be written with the transfer context for the desired channels and link parameter sets. EDMA_TPCC processes and sets based on a trigger event and submits a transfer request (TR) to the transfer controllers.
- EDMA event and interrupt processing registers: Allows mapping of events to parameter sets, enable/disable events, enable/disable interrupt conditions, and clearing interrupts.
- Completion detection: The completion detect block detects completion of transfers by the EDMA_TPTCs or follower peripherals. The completion of transfers can be used optionally to chain trigger new transfers or to assert interrupts.
- Event queues: Event queues form the interface between the event detection logic and the transfer request submission logic.
- Memory protection registers: Memory protection registers define the accesses (privilege level and requestor(s)) that are allowed to access the DMA channel shadow region view(s) and regions of PaRAM.

Other functions include the following:

- Region registers: Region registers allow DMA resources (DMA channels and interrupts) to be assigned to unique regions that different EDMA programmers own (for example, DSPs).
- Debug registers: Debug registers allow debug visibility by providing registers to read the queue status, controller status, and missed event status.

Copyright © 2025 Texas Instruments Incorporated

The EDMA_TPCC includes two channel types: DMA channels (64 channels) and QDMA channels (8 channels).

Each channel is associated with a given event queue/transfer controller and with a given PaRAM set. These channels are identical. The main difference between a DMA channel and a QDMA channel is the method that the system uses to trigger transfers.

- DMA channels are triggered by external events by the event set registers EDMA_TPCC_ESR and EDMA_TPCC_ESRH, or through chaining register EDMA_TPCC_CER.
- QDMA channels are triggered automatically (auto-triggered) by the CPU. QDMAs allow a minimum number of linear writes to be issued to the TPCC to force a series of transfers to occur.

The TPCC arbitrates among pending DMA and QDMA events with a fixed [64:1] and [8:1] priority encoder for these events, respectively (a low channel number corresponds to a high priority).

DMA events are always higher priority than QDMA events. The higher-priority event is placed in the event queue to await submission to the transfer controllers, which occurs at the earliest opportunity. Each event queue is serviced in FIFO order, with a maximum of 16 queued events per event queue. If more than one TPTC is ready to be programmed with a transmission request (TR), the event queues are serviced with fixed priority: Q0 is higher than Q1. When an event is ready to be queued and the event queue and the TC channel are empty, the event bypasses the event queue and goes directly to the PaRAM processing logic for submission to the appropriate TC. If the transfer request TR bus or PaRAM processing are busy, the bypass path is not used. The bypass is not used to dequeue for a higher-priority event.

Events are extracted from the event queue when the EDMA_TPTC is available for a new TR to be programmed into the EDMA_TPTC (signaled with the empty signal, indicating an empty program register set). As an event is extracted from the event queue, the associated PaRAM entry is processed and submitted to the TPTC as a TR. The TPCC updates the appropriate counts and addresses in the PaRAM entry in anticipation of the next trigger event for that PaRAM entry.

The EDMA_TPCC also has an error detection logic that causes an error interrupt generation on various error conditions (for example: missed events EDMA_TPCC_EMR and EDMA_TPCC_EMRH registers, exceeding event queue thresholds in EDMA_TPCC_CCERR register, etc.).

10.1.3.1.2 Third-Party Transfer Controller

The TPTC module is the EDMA transfer engine that generates transfers as programmed in dedicated working registers, using two dedicated controller ports: a read-only port and a write-only port.

Figure 10-5 shows a functional block diagram and of the EDMA transfer controller (EDMA_TPTC) and its connection to the EDMA_TPCC.

Copyright © 2025 Texas Instruments Incorporated

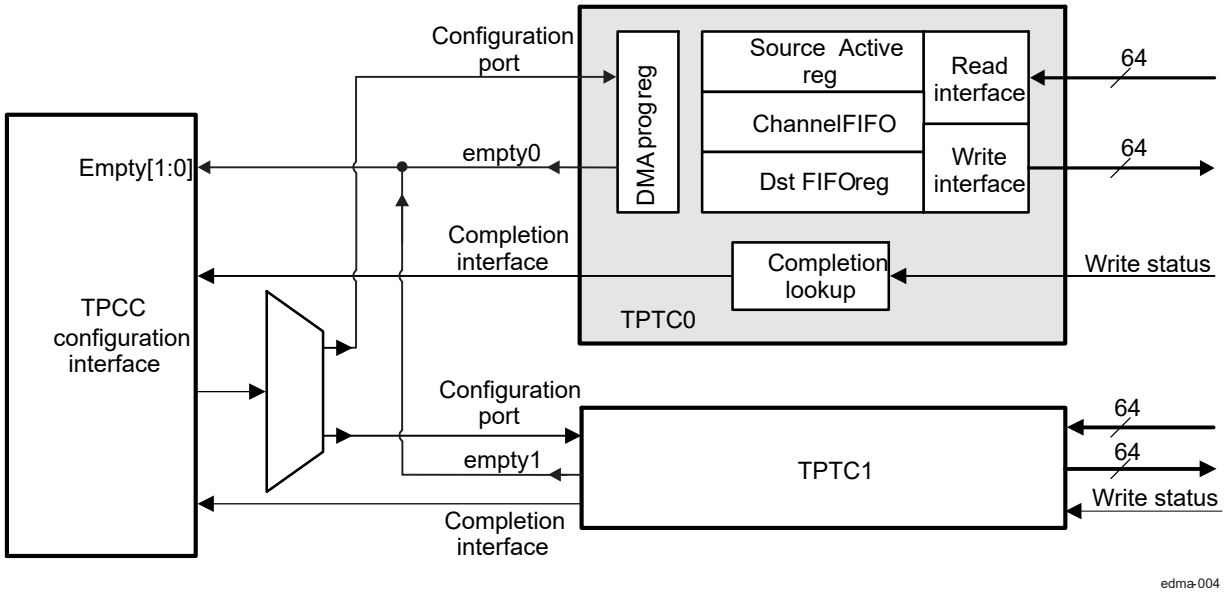

Figure 10-5. TPTC Block Diagram

Note

The port data bus width of the instances of the TPTC is fixed at 64 bits.

Two instances of the EDMA_TPTC generate concurrent traffic on the L3_VBUSM interconnect. Each TC controller consists of the following components:

- DMA Program Register Set: Stores the context for the DMA transfer that is loaded into the active register set when the current active register set completes. The CPU or TPCC programs the Program Register Set, not the active register set. For typical standalone operation, the CPU programs the Program Register while the TC services the Active register set. The Program Register set includes ownership control such that CPU software and the EDMA stay synchronized relative to one another.
- Source Active Register Set : Stores the context (src/dst/cnt/etc) for the DMA Transfer Request (TR) in progress in the Read Controller. The Active register set is split into independent Source and Destination, because the source interconnect controller and the destination interconnect controller operate independently of one another.
- Destination FIFO Register Set: Stores the context (src/dst/cnt/etc) for the DMA Transfer Request (TR) in progress, or pending, in the Write Controller. The pending register must allow the source controller to begin processing a new TR while the destination register set processes the previous TR.
- Channel FIFO: Temporary holding buffer for in-flight data. The read return data of the source peripheral is stored in the Data FIFO, and then is written to the destination peripheral by the write command/data bus.
- Read Controller/Interconnect Read Interface: The Interconnect read interface issues optimally sized read commands to the source peripheral, based on a burst size of 32 bytes and available landing space in the channel FIFO.
- Write controller/Interconnect Write interface: The local interconnect write interface issues optimally sized write commands to the destination peripheral, based on a burst size of 32 bytes and available data in the channel FIFO.
- Completion interface: sends completion codes to the EDMA_TPCC when a transfer completes and generates interrupts and chained events in the TPCC module.
- Configuration port: Target interface that provides read/write access to program registers and read access to all memory-mapped TPTC registers.

Copyright © 2025 Texas Instruments Incorporated

When one EDMA_TPTC module is idle and receive its first TR, DMA program register set receives the TR, where it transitions to the DMA source active set and the destination FIFO register set immediately. The second TR (if pending from EDMA_TPCC) is loaded into the DMA program set, ensuring it can start as soon as possible when the active transfer completes. As soon as the current active set is exhausted, the TR is loaded from the DMA program register set into the DMA source active register set as well as to the appropriate entry in the destination FIFO register set.

The read controller issues read commands controlled by the rules of command fragmentation and optimization. These are issued only when the data FIFO has space available for the data read. When sufficient data is in the data FIFO, the write controller starts issuing a write command again following the rules for command fragmentation and optimization.

Depending on the number of entries, the read controller can process up to two or four transfer requests ahead of the destination subject to the amount of free data FIFO.

10.1.3.2 Types of EDMA Controller Transfers

An EDMA transfer is always defined in terms of three dimensions. Figure 10-6 shows the three dimensions used by EDMA controller transfers. These three dimensions are defined as:

- 1st Dimension or Array (A): The 1st dimension in a transfer consists of EDMA_TPCC_ABCNT_n[15:0] ACNT contiguous bytes.
- 2nd Dimension or Frame (B): The 2nd dimension in a transfer consists of EDMA_TPCC_ABCNT_n[31:16] BCNT arrays of ACNT bytes. Each array transfer in the 2nd dimension is separated from each other by an index programmed using bit-fields EDMA_TPCC_BIDX_n[15:0] SBIDX or EDMA_TPCC_BIDX_n[31:16] DBIDX.
- 3rd Dimension or Block (C): The 3rd dimension in a transfer consists of CCNT frames of BCNT arrays of ACNT bytes. The Count for 3rd Dimension is defined in PaRAM memory EDMA_TPCC_CCNT_n[15:0] CCNT. Each transfer in the 3rd dimension is separated from the previous by an index programmed using EDMA_TPCC_CIDX_n[15:0] SCIDX or EDMA_TPCC_CIDX_n[31:16] DCIDX.

Note

The reference point for the index depends on the synchronization type. The amount of data transferred upon receipt of a trigger/synchronization event is controlled by the synchronization types (EDMA_TPCC_OPT_n[2] SYNCDIM bit). For these three dimensions, only two synchronization types are supported: A-synchronized transfers and AB-synchronized transfers.

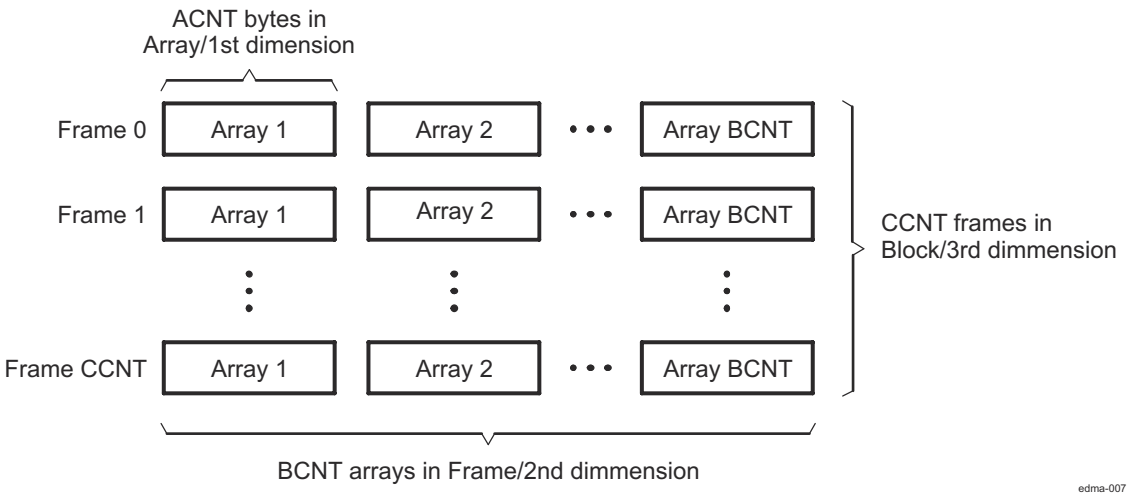

Figure 10-6. Definition of ACNT, BCNT, and CCNT

Copyright © 2025 Texas Instruments Incorporated

10.1.3.2.1 A-Synchronized Transfers

In an A-synchronized transfer, each EDMA sync event initiates the transfer of the 1st dimension of EDMA_TPCC_ABCNT_n[15:0] ACNT bytes, or one array of ACNT bytes. Each event/TR packet conveys the transfer information for one array only. Thus, BCNT × CCNT events are needed to completely service a PaRAM set.

Arrays are always separated by EDMA_TPCC_BIDX_n[15:0]SBIDX and EDMA_TPCC_BIDX_n[31:16] DBIDX, as shown in Figure 10-7, where the start address of Array N is equal to the start address of Array N – 1 plus source (SRC) or destination (DST) in EDMA_TPCC_BIDX_n register.

Frames are always separated by EDMA_TPCC_CIDX_n[15:0] SCIDX and EDMA_TPCC_CIDX_n[31:16] DCIDX. For A-synchronized transfers, after the frame is exhausted, the address is updated by adding SRCCIDX/DSTCIDX to the beginning address of the last array in the frame. As in Figure 10-7, SRCCIDX / DSTCIDX is the difference between the start of Frame 0 Array 3 to the start of Frame 1 Array 0.

Figure 10-7 shows an A-synchronized transfer of 3 (CCNT) frames of 4 (BCNT) arrays of n (ACNT) bytes. In this example, a total of 12 sync events (BCNT × CCNT) exhaust a PaRAM set. See Figure 10-7 for details on parameter set updates.

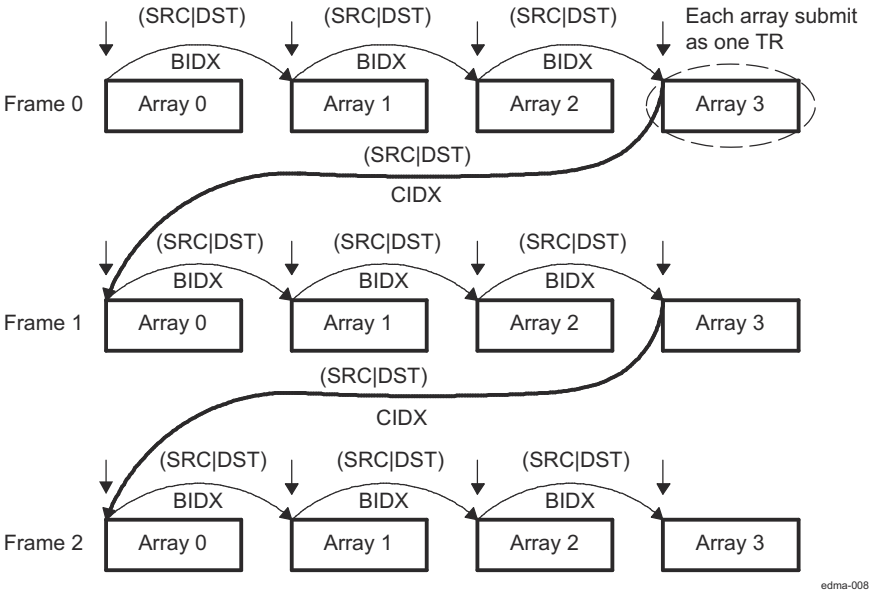

Figure 10-7. A-Synchronized Transfers (ACNT = n, BCNT = 4, CCNT = 3)

Copyright © 2025 Texas Instruments Incorporated

10.1.3.2.2 AB-Synchronized Transfers

In a AB-synchronized transfer, each EDMA sync event initiates the transfer of 2 dimensions or one frame. Each event/TR packet conveys information for one entire frame of BCNT_n arrays of ACNT_n bytes. Thus, EDMA_TPCC_CCNT_n events are needed to completely service a PaRAM set.

Arrays are always separated by EDMA_TPCC_BIDX_n[15:0] SBIDX and EDMA_TPCC_BIDX_n[31:16] DBIDX as shown in Figure 10-8. Frames are always separated by SRCCIDX and DSTCIDX.

Note that for AB-synchronized transfers, after a TR for the frame is submitted, the address update is to add EDMA_TPCC_CIDX_n[15:0] SCIDX / EDMA_TPCC_CIDX_n[31:16] DCIDX to the beginning address of the beginning array in the frame. This is different from A-synchronized transfers where the address is updated by adding SRCCIDX/DSTCIDX to the start address of the last array in the frame. See Section 10.1.3.3.6 for details on parameter set updates.

Figure 10-8 shows an AB-synchronized transfer of 3 (CCNT) frames of 4 (BCNT) arrays of *n* (ACNT) bytes. In this example, a total of 3 sync events (CCNT) exhaust a PaRAM set; that is, a total of 3 transfers of 4 arrays each completes the transfer.

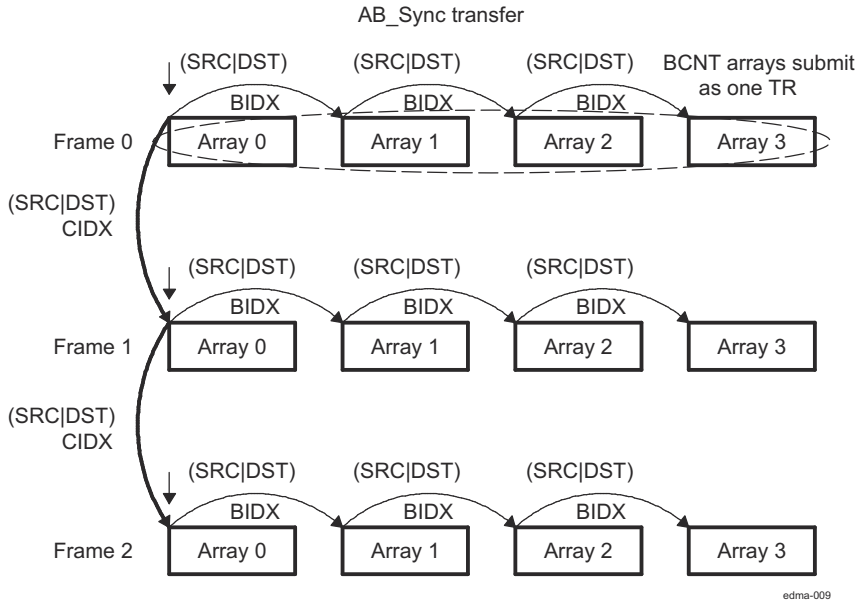

Figure 10-8. AB-Synchronized Transfers (ACNT = n, BCNT = 4, CCNT = 3)

Note

ABC-synchronized transfers are not directly supported. It can be logically achieved by chaining between multiple AB-synchronized transfers.

10.1.3.3 Parameter RAM (PaRAM)

The EDMA controller is a RAM-based architecture. The transfer context (source/destination addresses, count, indexes, etc.) for DMA or QDMA channels is programmed in a parameter RAM table in EDMA_TPCC. The PaRAM table is segmented into multiple PaRAM sets. Each PaRAM set includes eight four-byte PaRAM set entries (32-bytes total per PaRAM set), which includes typical DMA transfer parameters such as source address, destination address, transfer counts, indexes, options, etc.

The PaRAM structure supports flexible ping-pong, circular buffering, channel chaining, and auto-reloading (linking).

The contents of the PaRAM include the following:

Copyright © 2025 Texas Instruments Incorporated

- 128 PaRAM sets
- 64 channels that are direct mapped and can be used as link for QDMA sets if not used for DMA channels
- 8 channels remain for link or QDMA sets

By default, all channels map to PaRAM set to 0 and should be remapped before use by EDMA_TPCC_DCHMAPN_m and EDMA_TPCC_QCHMAPN_j registers. This can be done in the device boot flow.

Table 10-11. EDMA Parameter RAM Contents

PaRAM Set Number	Base Address	Parameters(1)
0	EDMA Base Address + 4000h to EDMA Base Address + 401Fh	PaRAM set 0
1	EDMA Base Address + 4020h to EDMA Base Address + 403Fh	PaRAM set 1
2	EDMA Base Address + 4040h to EDMA Base Address + 405Fh	PaRAM set 2
3	EDMA Base Address + 4060h to EDMA Base Address + 407Fh	PaRAM set 3
4	EDMA Base Address + 4080h to EDMA Base Address + 409Fh	PaRAM set 4
5	EDMA Base Address + 40A0h to EDMA Base Address + 40BFh	PaRAM set 5
6	EDMA Base Address + 40C0h to EDMA Base Address + 40DFh	PaRAM set 6
7	EDMA Base Address + 40E0h to EDMA Base Address + 40FFh	PaRAM set 7
8	EDMA Base Address + 4100h to EDMA Base Address + 411Fh	PaRAM set 8
9	EDMA Base Address + 4120h to EDMA Base Address + 413Fh	PaRAM set 9
...	...	...
63	EDMA Base Address + 47E0h to EDMA Base Address + 47FFh	PaRAM set 63
64	EDMA Base Address + 4800h to EDMA Base Address + 481Fh	PaRAM set 64
65	EDMA Base Address + 4820h to EDMA Base Address + 483Fh	PaRAM set 65
...	...	...
127	EDMA Base Address + 5000h to EDMA Base Address + 4FE0h	PaRAM set 127

(1) The device has 8 QDMA channels that can be mapped to any parameter set number from 0 to 127.

Note

AM273x has a maximum of 128 PaRAM sets. Additional tables and diagrams in this chapter may show a larger number (up to 511), however 128 is the maximum allowed number of entries.

10.1.3.3.1 PaRAM

Each parameter set of PaRAM is organized into eight 32-bit words or 32 bytes, as shown in PaRAM Set and described in EDMA Channel Parameter Description. Each PaRAM set consists of 16-bit and 32-bit parameters.

Copyright © 2025 Texas Instruments Incorporated

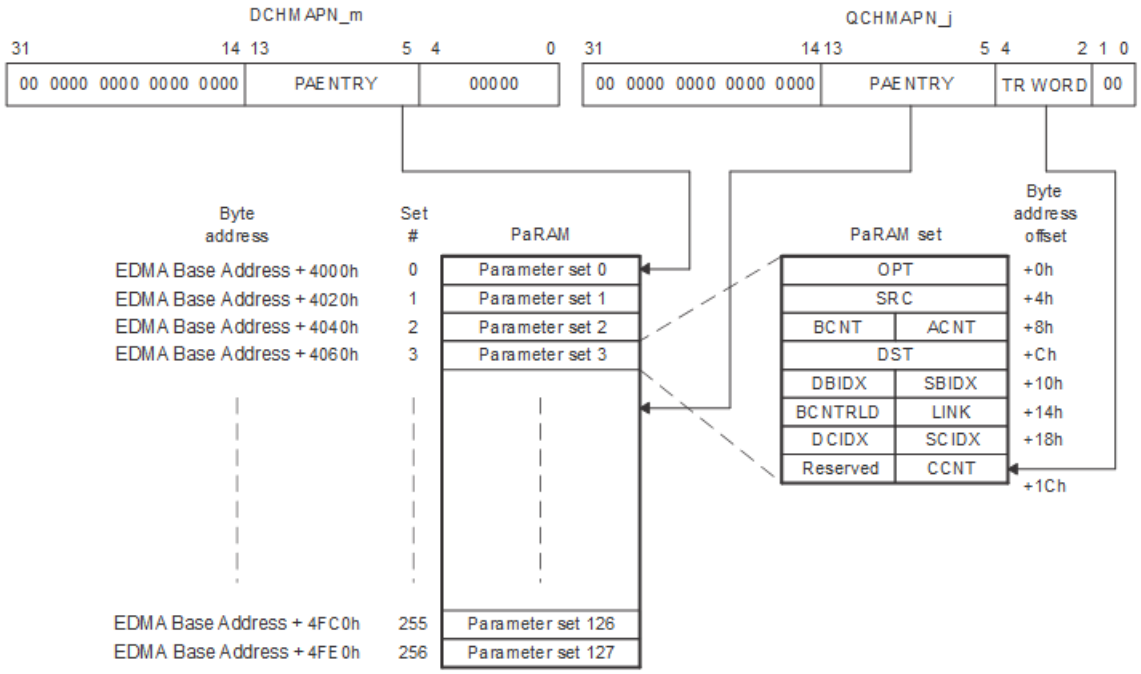

Figure 10-9. PaRAM Set

Note

Figure above is a representation of 128 bit entries. For device specific details please refer to EDMA configuration chapter.

Copyright © 2025 Texas Instruments Incorporated

Table 10-12. EDMA Channel Parameter Description

Offset Address (bytes)	Acronym	Parameter	Description
0h	OPT	Channel Options EDMA_TPCC_OPT_n register	Transfer configuration options
4h	SRC	Channel Source Address EDMA_TPCC_SRC_n register	The byte address from which data is transferred
8h(1)	ACNT	Count for 1st Dimension EDMA_TPCC_ABCNT_n[15:0] ACNT bit-field.	Unsigned value specifying the number of contiguous bytes within an array (first dimension of the transfer). Valid values range from 1 to 65 535.
	BCNT	Count for 2nd Dimension EDMA_TPCC_ABCNT_n[31:16] BCNT bit-field.	Unsigned value specifying the number of arrays in a frame, where an array is ACNT bytes. Valid values range from 1 to 65 535.
Ch	DST	Channel Destination Address EDMA_TPCC_DST_n register	The byte address to which data is transferred
10h(1)	SBIDX	Source BCNT Index EDMA_TPCC_BIDX_n[15:0] SBIDX bit-field.	Signed value specifying the byte address offset between source arrays within a frame (2nd dimension). Valid values range from –32 768 and 32 767.
	DBIDX	Destination BCNT Index EDMA_TPCC_BIDX_n[31:16] DBIDX bit-field.	Signed value specifying the byte address offset between destination arrays within a frame (2nd dimension). Valid values range from –32 768 and 32 767.
14h(1)	LINK	Link Address EDMA_TPCC_LNK_n[15:0] LINK bit-field	The PaRAM address containing the PaRAM set to be linked (copied from) when the current PaRAM set is exhausted. A value of FFFFh specifies a null link.
	BCNTRLD	BCNT Reload EDMA_TPCC_LNK_n[31:16] BCNTRLD bit-field	The count value used to reload BCNT when BCNT decrements to 0 (TR is submitted for the last array in 2nd dimension). Only relevant in A-synchronized transfers.
18h(1)	SCIDX	Source CCNT index. EDMA_TPCC_CIDX_n[15:0] SCIDX bit-field.	Signed value specifying the byte address offset between frames within a block (3rd dimension). Valid values range from –32 768 and 32 767. A-synchronized transfers: The byte address offset from the beginning of the last source array in a frame to the beginning of the first source array in the next frame. AB-synchronized transfers: The byte address offset from the beginning of the first source array in a frame to the beginning of the first source array in the next frame.
	DCIDX	Destination CCNT index. EDMA_TPCC_CIDX_n[31:16] DCIDX bit-field.	Signed value specifying the byte address offset between frames within a block (3rd dimension). Valid values range from –32 768 and 32 767. A-synchronized transfers: The byte address offset from the beginning of the last destination array in a frame to the beginning of the first destination array in the next frame. AB-synchronized transfers: The byte address offset from the beginning of the first destination array in a frame to the beginning of the first destination array in the next frame.
1Ch	CCNT	Count for 3rd Dimension. EDMA_TPCC_CCNT_n[15:0] CCNT bit-field.	Unsigned value specifying the number of frames in a block, where a frame is BCNT arrays of ACNT bytes. Valid values range from 1 to 65 535.
	Reserved	Reserved	Reserved. Always write 0 to this bit; writes of 1 to this bit are not supported and attempts cam result in undefined behavior.

(1) If OPT, SRC, or DST is the trigger word for a QDMA transfer, then it is required to do a 32-bit access to that field. Furthermore, it is recommended to perform only 32-bit accesses on the parameter RAM for best code compatibility. For example, switching the endianness of the processor swaps addresses of the 16-bit fields, but 32-bit accesses avoid the issue entirely.

Copyright © 2025 Texas Instruments Incorporated

10.1.3.3.2 EDMA Channel PaRAM Set Entry Fields

10.1.3.3.2.1 Channel Options Parameter (OPT)

This is the control register for TPCC channel configuration options. Refer to the EDMA_TPCC_OPT_n register bitfield description for additional details.

10.1.3.3.2.2 Channel Source Address (SRC)

The 32-bit source address parameter specifies the starting byte address of the source. For SAM in increment mode, there are no alignment restrictions imposed by EDMA. For SAM in FIFO addressing mode, it must program the source address to be aligned to a 256-bit aligned address (5 LSBs of address must be 0). If this rule is not observed, the EDMA_TPTC returns an error. Refer to Section 10.1.3.12.3 *Error Generation* for additional details.

10.1.3.3.2.3 Channel Destination Address (DST)

The 32-bit destination address parameter specifies the starting byte address of the destination. For DAM in increment mode, there are no alignment restrictions imposed by EDMA. For DAM in FIFO addressing mode, it must program the destination address to be aligned to a 256-bit aligned address (5 LSBs of address must be 0). If this rule is not observed, the EDMA_TPTC returns an error. Refer to *Error Generation* for additional details.

10.1.3.3.2.4 Count for 1st Dimension (ACNT)

EDMA_TPCC_ABCNT_n[15:0] ACNT represents the number of bytes within the 1st dimension of a transfer. ACNT is a 16-bit unsigned value with valid values between 1 and 65535. Therefore, the maximum number of bytes in an array is 65 535 bytes (64K – 1 bytes). ACNT must be greater than or equal to 1 for a TR to be submitted to EDMA_TPTC. A transfer with ACNT equal to 0 is considered either a null or dummy transfer. A dummy or null transfer generates a completion code depending on the settings of the completion bit fields in EDMA_TPCC_OPT_n.

Refer to Section 10.1.3.3.5 *Dummy Versus Null Transfer Comparison* and Section 10.1.3.5.3 *Dummy or Null Completion* for details on dummy/null completion conditions.

10.1.3.3.2.5 Count for 2nd Dimension (BCNT)

EDMA_TPCC_ABCNT_n[15:0] BCNT is a 16-bit unsigned value that specifies the number of arrays of length ACNT. For normal operation, valid values for BCNT are between 1 and 65 535. Therefore, the maximum number of arrays in a frame is 65 535 (64K – 1 arrays). A transfer with BCNT equal to 0 is considered either a null or dummy transfer. A dummy or null transfer generates a completion code depending on the settings of the completion bit fields in EDMA_TPCC_OPT_n.

Refer to Section 10.1.3.3.5 *Dummy Versus Null Transfer Comparison* and Section 10.1.3.5.3 *Dummy or Null Completion* for details on dummy/null completion conditions.

10.1.3.3.2.6 Count for 3rd Dimension (CCNT)

EDMA_TPCC_CCNT_n[15:0] CCNT is a 16-bit unsigned value that specifies the number of frames in a block. Valid values for CCNT are between 1 and 65 535. Therefore, the maximum number of frames in a block is 65 535 (64K – 1 frames). A transfer with CCNT equal to 0 is considered either a null or dummy transfer. A dummy or null transfer generates a completion code depending on the settings of the completion bit fields in EDMA_TPCC_OPT_n.

A CCNT value of 0 is considered either a null or dummy transfer.

Refer to Section 10.1.3.3.5 *Dummy Versus Null Transfer Comparison* and Section 10.1.3.5.3 *Dummy or Null Completion* for details on dummy/null completion conditions.

10.1.3.3.2.7 BCNT Reload (BCNTRLD)

EDMA_TPCC_LNK_n[31:16] BCNTRLD is a 16-bit unsigned value used to reload the EDMA_TPCC_ABCNT_n[15:0] BCNT field once the last array in the 2nd dimension is transferred. This field is only used for A-synchronized transfers. In this case, the EDMA_TPCC decrements the BCNT value by 1 on

Copyright © 2025 Texas Instruments Incorporated

each TR submission. When BCNT reaches 0, the EDMA_TPCC decrements CCNT and uses the BCNTRLD value to reinitialize the BCNT value.

For AB-synchronized transfers, the EDMA_TPCC submits the BCNT in the TR and the EDMA_TPTC decrements BCNT appropriately. For AB-synchronized transfers, BCNTRLD is not used.

10.1.3.3.2.8 Source B Index (SBIDX)

EDMA_TPCC_BIDX_n[15:0] SBIDX is a 16-bit signed value (2s complement) used for source address modification between each array in the 2nd dimension. Valid values for EDMA_TPCC_BIDX_n[15:0] SBIDX are between –32 768 and 32 767. It provides a byte address offset from the beginning of the source array to the beginning of the next source array. It applies to both A-synchronized and AB-synchronized transfers. Some examples:

- EDMA_TPCC_BIDX_n[15:0] SBIDX = 0000h (0): no address offset from the beginning of an array to the beginning of the next array. All arrays are fixed to the same beginning address.
- EDMA_TPCC_BIDX_n[15:0] SBIDX = 0003h (+3): the address offset from the beginning of an array to the beginning of the next array in a frame is 3 bytes. For example, if the current array begins at address 1000h, the next array begins at 1003h.
- EDMA_TPCC_BIDX_n[15:0] SBIDX = FFFFh (–1): the address offset from the beginning of an array to the beginning of the next array in a frame is –1 byte. For example, if the current array begins at address 5054h, the next array begins at 5053h.

10.1.3.3.2.9 Destination B Index (DBIDX)

EDMA_TPCC_BIDX_n[31:16] DBIDX is a 16-bit signed value (2s complement) used for destination address modification between each array in the 2nd dimension. Valid values for EDMA_TPCC_BIDX_n[31:16] DBIDX are between –32 768 and 32 767. It provides a byte address offset from the beginning of the destination array to the beginning of the next destination array within the current frame. It applies to both A-synchronized and AB-synchronized transfers. Refer to Section 10.1.3.3.2.8 *Source B Index (SBIDX)* for examples.

10.1.3.3.2.10 Source C Index (SCIDX)

EDMA_TPCC_CIDX_n[15:0] SCIDX is a 16-bit signed value (2s complement) used for source address modification in the 3rd dimension. Valid values for EDMA_TPCC_CIDX_n[15:0] SCIDX are between –32 768 and 32 767. It provides a byte address offset from the beginning of the current array (pointed to by SRC address) to the beginning of the first source array in the next frame. It applies to both A-synchronized and AB-synchronized transfers.

Note

When SCIDX is applied, the current array in an A-synchronized transfer is the last array in the frame (Figure 10-7), while the current array in an AB-synchronized transfer is the first array in the frame (Figure 10-8).

10.1.3.3.2.11 Destination C Index (DCIDX)

EDMA_TPCC_CIDX_n[31:16] DCIDX is a 16-bit signed value (2s complement) used for destination address modification in the 3rd dimension. Valid values are between –32 768 and 32 767. It provides a byte address offset from the beginning of the current array (pointed to by DST address) to the beginning of the first destination array TR in the next frame. It applies to both A-synchronized and AB-synchronized transfers.

Note

When DCIDX is applied, the current array in an A-synchronized transfer is the last array in the frame (Figure 10-7), while the current array in a AB-synchronized transfer is the first array in the frame (Figure 10-8).

Copyright © 2025 Texas Instruments Incorporated

10.1.3.3.2.12 Link Address (LINK)

The EDMA_TPCC provides a mechanism, called linking, to reload the current PaRAM set upon its natural termination (that is, after the count fields are decremented to 0) with a new PaRAM set. The 16-bit parameter EDMA_TPCC_LNK_n[15:0] LINK specifies the byte address offset in the PaRAM from which the EDMA_TPCC loads/reloads the next PaRAM set during linking.

It must program the link address to point to a valid aligned 32-byte PaRAM set. The 5 LSBs of the LINK field should be cleared to 0.

The EDMA_TPCC ignores the upper 2 bits of the LINK entry, allowing the flexibility of programming the link address as either an absolute/literal byte address or use the PaRAM-base-relative offset address. Therefore, if it use the literal address with a range from 4000h to 7FFFh, it will be treated as a PaRAM-base-relative value of 0000h to 3FFFh.

It should check that the programed value in the EDMA_TPCC_LNK_n[15:0] LINK field is correctly, so that link update is requested from a PaRAM address that falls in the range of the available PaRAM addresses on the device.

Value of FFFFh in EDMA_TPCC_LNK_n[15:0] LINK bit-field is referred to as a NULL link that should cause the EDMA_TPCC to perform an internal write of 0 to all entries of the current PaRAM set, except for the EDMA_TPCC_LNK_n[15:0] LINK field is set to FFFFh. Also, see Section 10.1.3.5 *Completion of a DMA Transfer* for details on terminating a transfer.

10.1.3.3.3 Null PaRAM Set

A null PaRAM set is defined as a PaRAM set where all count fields (EDMA_TPCC_ABCNT_n[15:0] ACNT, EDMA_TPCC_ABCNT_n[31:16] BCNT, and EDMA_TPCC_CCNT_n[15:0] CCNT) are cleared to 0. If a PaRAM set associated with a channel is a NULL set, then when serviced by the EDMA_TPCC, the bit corresponding to the channel is set in the associated event missed register (EDMA_TPCC_EMR, EDMA_TPCC_EMRH, or EDMA_TPCC_QEMR). This bit remains set in the associated secondary event register (EDMA_TPCC_SER, EDMA_TPCC_SERH, or EDMA_TPCC_QSER).
This implies that any future events on the same channel are ignored by the EDMA_TPCC and it is required to clear the bit in EDMA_TPCC_SER, EDMA_TPCC_SERH, or EDMA_TPCC_QSER for the channel. This is considered an error condition, since events are not expected on a channel that is configured as a null transfer.

10.1.3.3.4 Dummy PaRAM Set

A dummy PaRAM set is defined as a PaRAM set where at least one of the count fields (EDMA_TPCC_ABCNT_n[15:0] ACNT, EDMA_TPCC_ABCNT_n[31:16] BCNT, or EDMA_TPCC_CCNT_n[15:0] CCNT) is cleared to 0 and at least one of the count fields is nonzero.

If a PaRAM set associated with a channel is a dummy set, then when serviced by the EDMA_TPCC, it will not set the bit corresponding to the channel (DMA/QDMA) in the event missed register (EDMA_TPCC_EMR, EDMA_TPCC_EMRH, or EDMA_TPCC_QEMR) and the secondary event register (EDMA_TPCC_SER, EDMA_TPCC_SERH, or EDMA_TPCC_QSER) bit gets cleared similar to a normal transfer. Future events on that channel are serviced. A dummy transfer is a legal transfer of 0 bytes.

10.1.3.3.5 Dummy Versus Null Transfer Comparison

There are some differences in the way the EDMA_TPCC logic treats a dummy versus a null transfer request. A null transfer request is an error condition, but a dummy transfer is a legal transfer of 0 bytes. A null transfer causes an error bit (E*n*) in EDMA_TPCC_EMR to get set and the E*n* bit in EDMA_TPCC_SER remains set, essentially preventing any further transfers on that channel without clearing the associated error registers.

Table 10-13 summarizes the conditions and effects of null and dummy transfer requests.

Table 10-13. Dummy and Null Transfer Request

Feature	Null TR	Dummy TR
EDMA_TPCC_EMR / EDMA_TPCC_EMRH / EDMA_TPCC_QEMR is set	Yes	No
EDMA_TPCC_SER / EDMA_TPCC_SERH / EDMA_TPCC_QSER remains set	Yes	No

Copyright © 2025 Texas Instruments Incorporated

Table 10-13. Dummy and Null Transfer Request (continued)

Feature	Null TR	Dummy TR
Link update (STATIC = 0 in EDMA_TPCC_OPT_n)	Yes	Yes
EDMA_TPCC_QER is set	Yes	Yes
EDMA_TPCC_IPR / EDMA_TPCC_IPRH, EDMA_TPCC_CER / EDMA_TPCC_CERH is set using early completion	Yes	Yes

10.1.3.3.6 Parameter Set Updates

When a TR is submitted for a given DMA/QDMA channel and its corresponding PaRAM set, the EDMA_TPCC is responsible for updating the PaRAM set in anticipation of the next trigger event. For events that are not final, this includes address and count updates; for final events, this includes the link update.

The specific PaRAM set entries that are updated depend on the channel's synchronization type (A-synchronized or AB-synchronized) and the current state of the PaRAM set. A B-update refers to the decrementing of EDMA_TPCC_ABCNT_n[31:16] BCNT in the case of A-synchronized transfers after the submission of successive TRs. A C-update refers to the decrementing of CCNT in the case of A-synchronized transfers after BCNT TRs for EDMA_TPCC_ABCNT_n[15:0] ACNT byte transfers have submitted. For AB-synchronized transfers, a C-update refers to the decrementing of EDMA_TPCC_CCNT_n[15:0] CCNT after submission of every transfer request.

Refer to Table 10-14 for details and conditions on the parameter updates. A link update occurs when the PaRAM set is exhausted, as described in Section 10.1.3.3.7 *Linking Transfers*.

After the TR is read from the PaRAM (and is in process of being submitted to EDMA_TPTC), the following fields are updated if needed:

- A-synchronized: BCNT, CCNT, SRC, DST.
- AB-synchronized: CCNT, SRC, DST.

The following fields are not updated (except for during linking, where all fields are overwritten by the link PaRAM set):

- A-synchronized: EDMA_TPCC_ABCNT_n[15:0] ACNT, EDMA_TPCC_LNK_n[31:16] BCNTRLD, EDMA_TPCC_BIDX_n[15:0] SBIDX, EDMA_TPCC_BIDX_n[31:16] DBIDX, EDMA_TPCC_CIDX_n[15:0] SCIDX, EDMA_TPCC_CIDX_n[31:16] DCIDX, EDMA_TPCC_OPT_n, EDMA_TPCC_LNK_n[15:0]LINK.
- AB-synchronized: EDMA_TPCC_ABCNT_n[15:0] ACNT, EDMA_TPCC_ABCNT_n[31:16] BCNT, EDMA_TPCC_LNK_n[31:16] BCNTRLD, EDMA_TPCC_BIDX_n[15:0] SBIDX, EDMA_TPCC_BIDX_n[31:16] DBIDX, EDMA_TPCC_CIDX_n[15:0] SCIDX, EDMA_TPCC_CIDX_n[31:16] DCIDX, EDMA_TPCC_OPT_n, EDMA_TPCC_LNK_n[15:0]LINK.

Note

PaRAM updates only pertain to the information that is needed to properly submit the next transfer request to the EDMA_TPTC. Updates that occur while data is moved within a transfer request are tracked within the transfer controller, and is detailed in Section 10.1.3.12 *EDMA Transfer Controller (EDMA_TPTC)*. For A-synchronized transfers, the EDMA_TPCC always submits a TRP for EDMA_TPCC_ABCNT_n[15:0] ACNT bytes (EDMA_TPCC_ABCNT_n[31:16] BCNT = 1 and EDMA_TPCC_CCNT_n[15:0] CCNT = 1). For AB-synchronized transfers, the EDMA_TPCC always submits a TRP for EDMA_TPCC_ABCNT_n[15:0] ACNT bytes of BCNT arrays (EDMA_TPCC_CCNT_n[15:0] CCNT = 1). The EDMA_TPTC is responsible for updating source and destination addresses within the array based on EDMA_TPCC_ABCNT_n[15:0] ACNT and EDMA_TPCC_OPT_n[10:8] FWID. For AB-synchronized transfers, the EDMA_TPTC is also responsible to update source and destination addresses between arrays based on EDMA_TPCC_BIDX_n[15:0] SBIDX and EDMA_TPCC_BIDX_n[31:16] DBIDX.

Table 10-14 shows the details of parameter updates that occur within EDMA_TPCC for A-synchronized and AB-synchronized transfers.

Copyright © 2025 Texas Instruments Incorporated

Table 10-14. Parameter Updates in EDMA_TPCC (for Non-Null, Non-Dummy PaRAM Set)

	A-Synchronized Transfer			AB-Synchronized Transfer		
	B-Update	**C-Update**	**Link Update**	**B-Update**	**C-Update**	**Link Update**
Condition:	**BCNT > 1**	**BCNT == 1 && CCNT > 1**	**BCNT == 1 && CCNT == 1**	**N/A**	**EDMA_TPCC_CCNT_n[15:0] CCNT > 1**	**EDMA_TPCC_CCNT_n[15:0] CCNT == 1**
SRC	+= SBIDX	+= SCIDX	= Link.EDMA_TPCC_SRC_n	in EDMA_TPTC	+= SCIDX	= Link.EDMA_TPCC_SRC_n
DST	+= DBIDX	+= DCIDX	= Link.EDMA_TPCC_DST_n	in EDMA_TPTC	+= DCIDX	= Link.EDMA_TPCC_DST_n
ACNT	None	None	= Link.EDMA_TPCC_ABCNT_n[15:0] ACNT	None	None	= Link.EDMA_TPCC_ABCNT_n[15:0] ACNT
BCNT	–= 1	= BCNTRLD	= Link.EDMA_TPCC_ABCNT_n[31:16] BCNT	in EDMA_TPTC	N/A	= Link.EDMA_TPCC_ABCNT_n[31:16] BCNT
CCNT	None	–= 1	= Link.EDMA_TPCC_CCNT_n[15:0] CCNT	in EDMA_TPTC	-=1	= Link.EDMA_TPCC_CCNT_n[15:0] CCNT
SBIDX	None	None	= Link.EDMA_TPCC_BIDX_n[15:0] SBIDX	in EDMA_TPTC	None	= Link.EDMA_TPCC_BIDX_n[15:0] SBIDX
DBIDX	None	None	= Link.EDMA_TPCC_BIDX_n[31:16] DBIDX	None	None	= Link.EDMA_TPCC_BIDX_n[31:16] DBIDX
SCIDX	None	None	= Link.EDMA_TPCC_BIDX_n[15:0] SBIDX	in EDMA_TPTC	None	= Link.EDMA_TPCC_BIDX_n[15:0] SBIDX
DCIDX	None	None	= Link.EDMA_TPCC_BIDX_n[31:16] DBIDX	None	None	= Link.EDMA_TPCC_BIDX_n[31:16] DBIDX
LINK	None	None	= Link.EDMA_TPCC_LNK_n[15:0]LINK	None	None	= Link.EDMA_TPCC_LNK_n[15:0]LINK
BCNTRLD	None	None	= Link.EDMA_TPCC_LNK_n[31:16] BCNTRLD	None	None	= Link.EDMA_TPCC_LNK_n[31:16] BCNTRLD
OPT(1)	None	None	= LINK.EDMA_TPCC_OPT_n	None	None	= LINK.EDMA_TPCC_OPT_n

(1) In all cases, no updates occur if EDMA_TPCC_OPT_n[3] STATIC == 1 for the current PaRAM set.

Note

The EDMA_TPCC includes no special hardware to detect when an indexed address update calculation overflows/underflows. The address update will wrap across boundaries as programmed by the user. It should ensure that no transfer is allowed to cross internal port boundaries between peripherals. A single TR must target a single source/destination slave endpoint.

Copyright © 2025 Texas Instruments Incorporated

10.1.3.3.7 Linking Transfers

The EDMA_TPCC provides a mechanism known as linking, which allows the entire PaRAM set to be reloaded from a location within the PaRAM memory map (for both DMA and QDMA channels). Linking is especially useful for maintaining ping-pong buffers, circular buffering, and repetitive/continuous transfers with no CPU intervention. Upon completion of a transfer, the current transfer parameters are reloaded with the parameter set pointed that the 16-bit link address field of the current parameter set points to. Linking only occurs when the EDMA_TPCC_OPT_n[3] STATIC bit is cleared.

Note

It should always link a transfer (EDMA or QDMA) to another useful transfer. If it must terminate a transfer, then link the transfer to a NULL parameter set. Refer to Section 10.1.3.3.3 *Null PaRAM Set*.

The link update occurs after the current PaRAM set event parameters have been exhausted. An event's parameters are exhausted when the EDMA channel controller has submitted all of the transfers that are associated with the PaRAM set.

A link update occurs for null and dummy transfers depending on the state of the EDMA_TPCC_OPT_n[3] STATIC bit and the EDMA_TPCC_LNK_n[15:0] LINK field. In both cases (null or dummy), if the value of EDMA_TPCC_LNK_n[15:0] LINK is FFFFh, then a null PaRAM set (with all 0s and EDMA_TPCC_LNK_n[15:0] LINK set to FFFFh) is written to the current PaRAM set.
Similarly, if EDMA_TPCC_LNK_n[15:0] LINK is set to a value other than FFFFh, then the appropriate PaRAM location that EDMA_TPCC_LNK_n[15:0] LINK points to is copied to the current PaRAM set.

Once the channel completion conditions are met for an event, the transfer parameters that are located at the link address are loaded into the current DMA or QDMA channel's associated parameter set. This indicates that the EDMA_TPCC reads the entire set (eight words) from the PaRAM set specified by EDMA_TPCC_LNK_n[15:0] LINK and writes all eight words to the PaRAM set that is associated with the current channel. Figure 10-10 shows an example of a linked transfer.

Copyright © 2025 Texas Instruments Incorporated

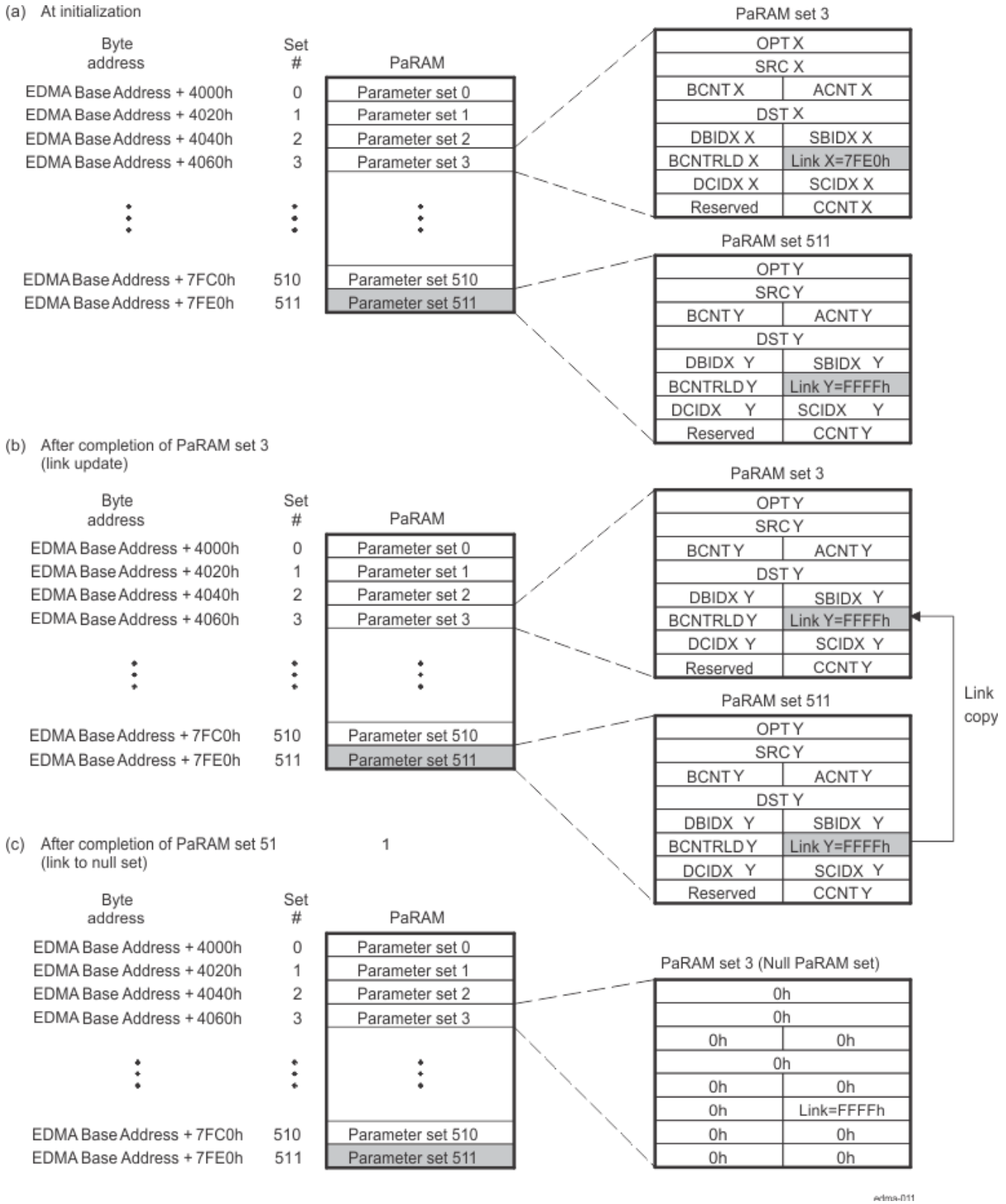

Figure 10-10. Linked Transfer

Copyright © 2025 Texas Instruments Incorporated

Note

AM273x has a maximum of 128 PaRAM sets. Additional tables and diagrams in this chapter may show a larger number (up to 511), however 128 is the maximum allowed number of entries.

Any PaRAM set in the PaRAM can be used as a link/reload parameter set. The PaRAM sets associated with peripheral synchronization events (refer to Section 10.1.3.6 *Event, Channel, and PaRAM Mapping*) only use for linking if the corresponding events are disabled.

If a PaRAM set location is defined as a QDMA channel PaRAM set (by EDMA_TPCC_QCHMAPN_j register), then copying the link PaRAM set into the current QDMA channel PaRAM set is recognized as a trigger event. It is latched in EDMA_TPCC_QER because a write to the trigger word was performed. This feature is used to create a linked list of transfers using a single QDMA channel and multiple PaRAM sets. Refer to Section 10.1.3.4.2 *QDMA Channels*.

Linking to itself replicates the behavior of auto-initialization, thus facilitating the use of circular buffering and repetitive transfers. After an EDMA channel exhausts its current PaRAM set, it reloads all of the parameter set entries from another PaRAM set, which is initialized with values that are identical to the original PaRAM set. Figure 10-11 shows an example of a linked to self transfer. Here, the PaRAM set 511 has the link field pointing to the address of parameter set 511 (linked to self).

Copyright © 2025 Texas Instruments Incorporated

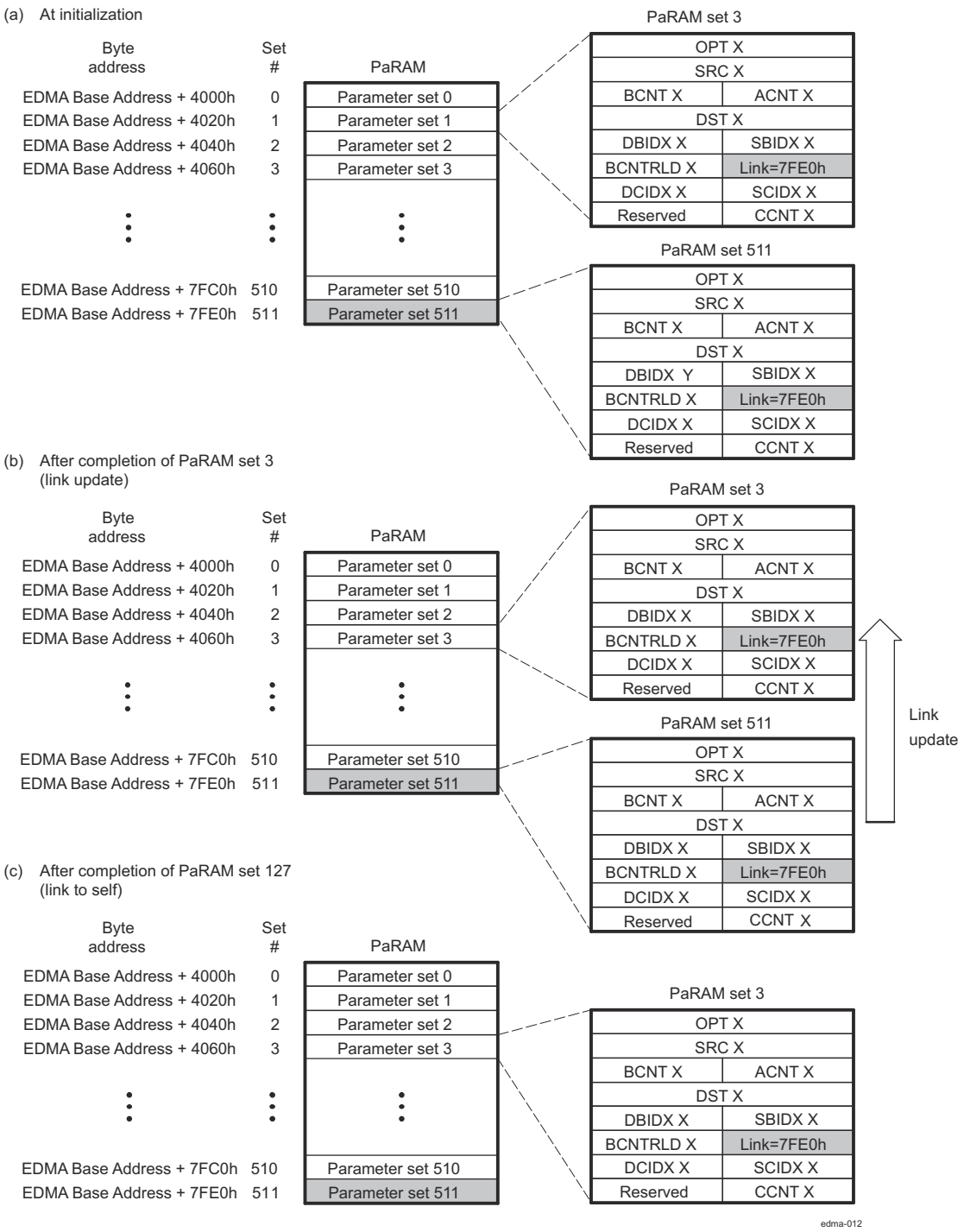

Figure 10-11. Link-to-Self Transfer

Note

If the in EDMA_TPCC_OPT_n[3] STATIC bit is set for a PaRAM set, then link updates are not performed.

Copyright © 2025 Texas Instruments Incorporated

10.1.3.3.8 Constant Addressing Mode Transfers/Alignment Issues

If either EDMA_TPCC_OPT_n[0] SAM or EDMA_TPCC_OPT_n[1] DAM is set (constant addressing mode), then the source or destination address must be aligned to a 256-bit aligned address, respectively, and the corresponding EDMA_TPCC_BIDX_n is an even multiple of 32 bytes (256 bits). The EDMA_TPCC does not recognize errors here, but the EDMA_TPTC asserts an error if this is not true. Refer to Section 10.1.3.12.3 *Error Generation*.

Note

The constant addressing (CONST) mode has limited applicability. The EDMA is configured for the constant addressing mode (EDMA_TPCC_OPT_n[0] SAM / EDMA_TPCC_OPT_n[1] DAM = 1) only if the transfer source or destination (on-chip memory, off-chip memory controllers, slave peripherals) support the constant addressing mode. If the constant addressing mode is not supported, the similar logical transfer can be achieved using the increment (INCR) mode (EDMA_TPCC_OPT_n[0] SAM / EDMA_TPCC_OPT_n[1] DAM =0) by appropriately programming the count and indices values.

10.1.3.3.9 Element Size

The EDMA controller does not use element-size and element-indexing. Instead, all transfers are defined in terms of all three dimensions: EDMA_TPCC_ABCNT_n[15:0] ACNT, EDMA_TPCC_ABCNT_n[31:16] BCNT, and EDMA_TPCC_CCNT_n[15:0] CCNT. An element-indexed transfer is logically achieved by programming EDMA_TPCC_ABCNT_n[15:0] ACNT to the size of the element and EDMA_TPCC_ABCNT_n[31:16] BCNT to the number of elements that need to be transferred. For example: If there are 16-bit audio data and 256 audio samples that must be transferred to a serial port, therefore the EDMA_TPCC_ABCNT_n[15:0] ACNT = 2 (2 bytes) and EDMA_TPCC_ABCNT_n[31:16] BCNT = 256.

10.1.3.4 Initiating a DMA Transfer

There are multiple ways to initiate a programmed data transfer using the EDMA_TPCC channel controller. Transfers on DMA channels are initiated by three sources.

They are listed as follows:

- **Event-triggered transfer request** (this is the typical usage of EDMA controller): A peripheral, system, or externally-generated event triggers a transfer request.
- **Manually-triggered transfer request:**The CPU manually triggers a transfer by writing a 1 to the corresponding bit in the event set registers (EDMA_TPCC_ESR / EDMA_TPCC_ESRH).
- **Chain-triggered transfer request:** A transfer is triggered on the completion of another transfer or sub-transfer.

Transfers on QDMA channels are initiated by two sources. They are as follows:

- **Auto-triggered transfer request:** Writing to the programmed trigger word triggers a transfer.
- **Link-triggered transfer requests:** Writing to the trigger word triggers the transfer when linking occurs.

10.1.3.4.1 DMA Channels

10.1.3.4.1.1 Event-Triggered Transfer Request

When an event is asserted from a peripheral or device pins, it gets latched in the corresponding bit of the event register (EDMA_TPCC_ER[31:0] E*n* = 1). For more information about peripheral events to EDMA events mapping, refer to *the device data manual*.
If the corresponding event in the event enable register (EDMA_TPCC_EER) is enabled (EDMA_TPCC_EER[31:0] E*n* = 1), then the EDMA_TPCC prioritizes and queues the event in the appropriate event queue. When the event reaches the head of the queue, it is evaluated for submission as a transfer request to the transfer controller.

If the PaRAM set is valid (not a NULL set), then a transfer request packet (TRP) is submitted to the EDMA_TPTC and the EDMA_TPCC_ER[31:0] E*n* bit is cleared. At this point, a new event can be safely received by the EDMA_TPCC.

Copyright © 2025 Texas Instruments Incorporated

If the PaRAM set associated with the channel is a NULL set (see Section 10.1.3.3.3 *Null PaRAM Set*), then no transfer request (TR) is submitted and the corresponding EDMA_TPCC_ER[31:0] E*n* bit is cleared and simultaneously the corresponding channel bit is set in the event miss register (EDMA_TPCC_EMR[31:0] E*n* = 1) to indicate that the event was discarded due to a null TR being serviced. Good programming practices should include cleaning the event missed error before re-triggering the DMA channel.

When an event is received, the corresponding event bit in the event register is set (EDMA_TPCC_ER[31:0] E*n* = 1), regardless of the state of EDMA_TPCC_EER[31:0] E*n*. If the event is disabled when an external event is received (EDMA_TPCC_ER[31:0] E*n* = 1 and EDMA_TPCC_EER[31:0] E*n* = 0), the EDMA_TPCC_ER[31:0] E*n* bit remains set. If the event is subsequently enabled (EDMA_TPCC_EER[31:0] E*n* = 1), then the pending event is processed by the EDMA_TPCC and the TR is processed/submitted, after which the EDMA_TPCC_ER[31:0] E*n* bit is cleared.

If an event is being processed (prioritized or is in the event queue) and another sync event is received for the same channel prior to the original being cleared (EDMA_TPCC_ER[31:0] E*n* != 0), then the second event is registered as a missed event in the corresponding bit of the event missed register (EDMA_TPCC_EMR[31:0] E*n* = 1).

10.1.3.4.1.2 Manually-Triggered Transfer Request

The CPU or any peripheral device module initiates a DMA transfer by writing to the event set register EDMA_TPCC_ESR. Writing a 1 to an event bit in the EDMA_TPCC_ESR results in the event being prioritized/queued in the appropriate event queue, regardless of the state of the EDMA_TPCC_EER[31:0] E*n* bit. When the event reaches the head of the queue, it is evaluated for submission as a transfer request to the transfer controller.

As in the event-triggered transfers, if the PaRAM set associated with the channel is valid (it is not a null set) then the TR is submitted to the associated EDMA_TPTC and the channel can be triggered again.

If the PaRAM set associated with the channel is a NULL set (see Section 10.1.3.3.3 *Null PaRAM Set*), then no transfer request (TR) is submitted and the corresponding EDMA_TPCC_ER[31:0] E*n* bit is cleared and simultaneously the corresponding channel bit is set in the event miss register EDMA_TPCC_EMR[31:0] E*n* = 1 to indicate that the event was discarded due to a null TR being serviced. Good programming practices should include clearing the event missed error before re-triggering the DMA channel.

If an event is being processed (prioritized or is in the event queue) and the same channel is manually set by a write to the corresponding channel bit of the event set register EDMA_TPCC_ESR[31:0] E*n* = 1 prior to the original being cleared EDMA_TPCC_ESR[31:0] E*n* = 0, then the second event is registered as a missed event in the corresponding bit of the event missed register EDMA_TPCC_EMR[31:0] E*n* = 1.

10.1.3.4.1.3 Chain-Triggered Transfer Request

Chaining is a mechanism by which the completion of one transfer automatically sets the event for another channel. When a chained completion code is detected, the value of which is dictated by the transfer completion code EDMA_TPCC_OPT_n[17:12] TCC of the PaRAM set associated with the channel, it results in the corresponding bit in the chained event register EDMA_TPCC_CER to be set EDMA_TPCC_CER[31:0] E[TCC] = 1).

Once a bit is set in EDMA_TPCC_CER, the EDMA_TPCC prioritizes and queues the event in the appropriate event queue. When the event reaches the head of the queue, it is evaluated for submission as a transfer request to the transfer controller.

As in the event-triggered transfers, if the PaRAM set associated with the channel is valid (it is not a null set) then the TR is submitted to the associated EDMA_TPTC and the channel can be triggered again.

If the PaRAM set associated with the channel is a NULL set (see Section 10.1.3.3.3 *Null PaRAM Set*), then no transfer request (TR) is submitted and the corresponding EDMA_TPCC_CER[31:0] E*n* bit is cleared and simultaneously the corresponding channel bit is set in the event miss register EDMA_TPCC_EMR[31:0] E*n* = 1 to indicate that the event was discarded due to a null TR being serviced. In this case, the error condition must

Copyright © 2025 Texas Instruments Incorporated

be cleared before the DMA channel can be re-triggered. Good programming practices might include clearing the event missed error before re-triggering the DMA channel.

If a chaining event is being processed (prioritized or queued) and another chained event is received for the same channel prior to the original being cleared EDMA_TPCC_CER[31:0] E*n* != 0), then the second chained event is registered as a missed event in the corresponding channel bit of the event missed register EDMA_TPCC_EMR[31:0] E*n* = 1.

Note

Chained event registers EDMA_TPCC_CER, event registers EDMA_TPCC_ER, and event set registers EDMA_TPCC_ESR operate independently. An event E*n* can be triggered by any of the trigger sources (event-triggered, manually-triggered, or chain-triggered).

10.1.3.4.2 QDMA Channels

10.1.3.4.2.1 Auto-Triggered and Link-Triggered Transfer Request

QDMA-based transfer requests are issued when a QDMA event gets latched in the QDMA event register EDMA_TPCC_QER[31:0] E*n* = 1. A bit corresponding to a QDMA channel is set in the QDMA event register EDMA_TPCC_QER when the following occurs:

- A CPU (or any device module) write occurs to a PaRAM address that is defined as a QDMA channel trigger word (programmed in the QDMA channel mapping register EDMA_TPCC_QCHMAPN_j for the particular QDMA channel and the QDMA channel is enabled via the QDMA event enable register EDMA_TPCC_QEER[31:0] E*n* = 1.
- EDMA_TPCC performs a link update on a PaRAM set address that is configured as a QDMA channel matches EDMA_TPCC_QCHMAPN_j settings and the corresponding channel is enabled via the QDMA event enable register EDMA_TPCC_QEER[31:0] E*n* = 1.

Once a bit is set in EDMA_TPCC_QER, the EDMA_TPCC prioritizes and queues the event in the appropriate event queue. When the event reaches the head of the queue, it is evaluated for submission as a transfer request to the transfer controller.

As in the event-triggered transfers, if the PaRAM set associated with the channel is valid (it is not a null set) then the TR is submitted to the associated EDMA_TPTC and the channel can be triggered again.

If a bit is already set in EDMA_TPCC_QER[31:0] E*n* = 1 and a second QDMA event for the same QDMA channel occurs prior to the original being cleared, the second QDMA event gets captured in the QDMA event miss register EDMA_TPCC_QEMR[7:0] E*n* = 1.

10.1.3.4.3 Comparison Between DMA and QDMA Channels

The primary difference between DMA and QDMA channels is the event/channel synchronization.

QDMA events are either auto-triggered or link triggered. Auto-triggering allows QDMA channels to be triggered by CPU(s) with a minimum number of linear writes to PaRAM. Link triggering allows a linked list of transfers to be executed, using a single QDMA PaRAM set and multiple link PaRAM sets.

A QDMA transfer is triggered when a CPU (or other device modules) writes to the trigger word of the QDMA channel parameter set (auto-triggered) or when the EDMA_TPCC performs a link update on a PaRAM set that has been mapped to a QDMA channel (link triggered).

Note

The CPUs triggered (manually triggered) DMA channels, in addition to writing to the PaRAM set, it is required to write to the event set register EDMA_TPCC_ESR to kick-off the transfer.

QDMA channels are typically for cases where a single event accomplishes a complete transfer since the CPU (or other device modules) must reprogram some portion of the QDMA PaRAM set in order to re-trigger the channel. QDMA transfers are programmed with EDMA_TPCC_ABCNT_n[31:0] BCNT =1 and

Copyright © 2025 Texas Instruments Incorporated

EDMA_TPCC_CCNT_n[15:0] CCNT = 1 for A-synchronized transfers, and EDMA_TPCC_CCNT_n[15:0] CCNT = 1 for AB-synchronized transfers.

Additionally, since linking is also supported (if EDMA_TPCC_OPT_n[3] STATIC = 0) for QDMA transfers, it allows to initiate a linked list of QDMAs, so when EDMA_TPCC copies over a link PaRAM set (including the write to the trigger word), the current PaRAM set mapped to the QDMA channel automatically recognizes as a valid QDMA event and initiate another set of transfers as specified by the linked set.

10.1.3.5 Completion of a DMA Transfer

A parameter set for a given channel is complete when the required number of transfer requests is submitted (based on receiving the number of synchronization events). The expected number of TRs for a non-null/non-dummy transfer is shown in Table 10-15 for both synchronization types along with state of the PaRAM set prior to the final TR being submitted. When the counts (EDMA_TPCC_ABCNT_n[31:0] BCNT and/or EDMA_TPCC_CCNT_n[15:0] CCNT) are this value, the next TR results in:

- Final chaining or interrupt codes sent by the transfer controllers (instead of intermediate).
- Link updates (linking to either null or another valid link set).

Table 10-15. Expected Number of Transfers for Non-Null Transfer

Sync Mode	Counts at time 0	Total # Transfers	Counts prior to final TR
A-synchronized	ACNT BCNT CCNT	(BCNT × CCNT) TRs of ACNT bytes each	EDMA_TPCC_ABCNT_n[31:0] BCNT == 1 && EDMA_TPCC_CCNT_n[15:0] CCNT == 1
AB-synchronized	ACNT BCNT CCNT	CCNT TRs for ACNT × BCNT bytes each	EDMA_TPCC_CCNT_n[15:0] CCNT == 1

The PaRAM OPT field must program with a specific transfer completion code TCC or EDMA_TPCC_OPT_n[17:12] TCC along with the other EDMA_TPCC_OPT_n fields ([22] TCCHEN, [20] TCINTEN, [23] ITCCHEN, and [21] ITCINTEN bits) to indicate whether the completion code is to be used for generating a chained event or/and for generating an interrupt upon completion of a transfer.

The specific EDMA_TPCC_OPT_n[17:12] TCC value (6-bit binary value) programmed dictates which of the 64-bits in the chain event register EDMA_TPCC_CER [TCC] and/or interrupt pending register EDMA_TPCC_IPR [TCC] is set.

It can selectively program whether the transfer controller sends back completion codes on completion of the final transfer request (TR) of a parameter set EDMA_TPCC_OPT_n[22] TCCHEN or EDMA_TPCC_OPT_n[20] TCINTEN, for all but the final transfer request (TR) of a parameter set EDMA_TPCC_OPT_n[23] ITCCHEN or EDMA_TPCC_OPT_n[21] ITCINTEN), or for all TRs of a parameter set (both). Refer to Section 10.1.3.8 *Chaining EDMA Channels* for details on chaining (intermediate/final chaining) and Section 10.1.3.9 *EDMA Interrupts* for details on intermediate/final interrupt completion.

A completion detection interface exists between the EDMA channel controller and transfer controller(s). This interface sends back information from the transfer controller to the channel controller to indicate that a specific transfer is completed. Completion of a transfer is used for generating chained events and/or generating interrupts to the CPU(s).

All DMA/QDMA PaRAM sets must also specify a link address value. For repetitive transfers such as ping-pong buffers, the link address value must point to another predefined PaRAM set. Alternatively, a non-repetitive transfer must set the link address value to the null link value. The null link value is defined as FFFFh. Refer to Section 10.1.3.3.7 *Linking Transfers* for more details.

Copyright © 2025 Texas Instruments Incorporated

Note

Any incoming events that are mapped to a null PaRAM set results in an error condition. The error condition must clear before the corresponding channel is used again. Refer to Section 10.1.3.3.5 *Dummy Versus Null Transfer Comparison*.

There are three ways the EDMA_TPCC gets updated/informed about a transfer completion: normal completion, early completion, and dummy/null completion. This applies to both chained events and completion interrupt generation.

10.1.3.5.1 Normal Completion

In normal completion mode EDMA_TPCC_OPT_n[11] TCCMODE = 0, the transfer or sub-transfer is considered to be complete when the EDMA channel controller receives the completion codes from the EDMA transfer controller. In this mode, the completion code to the channel controller is posted by the transfer controller after it receives a signal from the destination peripheral. Normal completion is typically used to generate an interrupt to inform the CPU that a set of data is ready for processing.

10.1.3.5.2 Early Completion

In early completion mode EDMA_TPCC_OPT_n[11] TCCMODE = 1, the transfer is considered to be complete when the EDMA channel controller submits the transfer request (TR) to the EDMA transfer controller. In this mode, the channel controller generates the completion code internally. Early completion is typically useful for chaining, as it allows subsequent transfers to be chained-triggered while the previous transfer is still in progress within the transfer controller, maximizing the overall throughput of the set of the transfers.

10.1.3.5.3 Dummy or Null Completion

This is a variation of early completion. Dummy or null completion is associated with a dummy set Section 10.1.3.3.4 or null set Section 10.1.3.3.3. In both cases, the EDMA channel controller does not submit the associated transfer request to the EDMA transfer controller(s). However, if the set (dummy/null) has the OPT field programmed to return completion code (intermediate/final interrupt/chaining completion), then it sets the appropriate bits in the interrupt pending registers EDMA_TPCC_IPR and EDMA_TPCC_IPRH or chained event register EDMA_TPCC_CER and EDMA_TPCC_CERH. The internal early completion path is used by the channel controller to return the completion codes internally (that is, EDMA_TPCC generates the completion code).

10.1.3.6 Event, Channel, and PaRAM Mapping

Several of the 64 DMA channels are tied to a specific hardware event, thus allowing events from device peripherals or external hardware (via the dma_evt[3:0] pins) to trigger transfers. A DMA channel typically requests a data transfer when it receives its event (apart from manually-triggered, chain-triggered, and other transfers). The amount of data transferred per synchronization event depends on the channel's configuration (EDMA_TPCC_ABCNT_n[15:0] ACNT, EDMA_TPCC_ABCNT_n[31:16] BCNT, EDMA_TPCC_CCNT_n[15:0] CCNT, etc.) and the synchronization type (A-synchronized or AB-synchronized).

The association of an event to a channel is fixed within the EDMA Channel Controller, that is, each DMA channel has one specific event associated with it.

In an application, if a channel does not use the associated synchronization event or if it does not have an associated synchronization event (unused), that channel can be used for manually-triggered or chained-triggered transfers, for linking/reloading, or as a QDMA channel.

10.1.3.6.1 DMA Channel to PaRAM Mapping

The mapping between the DMA channel numbers and the PaRAM sets is programmable (see Section 10.1.3.3). The DMA channel mapping registers EDMA_TPCC_DCHMAPN_m in the EDMA_TPCC provide programmability that allows the DMA channels to be mapped to any of the PaRAM sets in the PaRAM memory map. Figure 10-12 illustrates the use of EDMA_TPCC_DCHMAPN_m. There is one EDMA_TPCC_DCHMAPN_m register per channel.

Copyright © 2025 Texas Instruments Incorporated

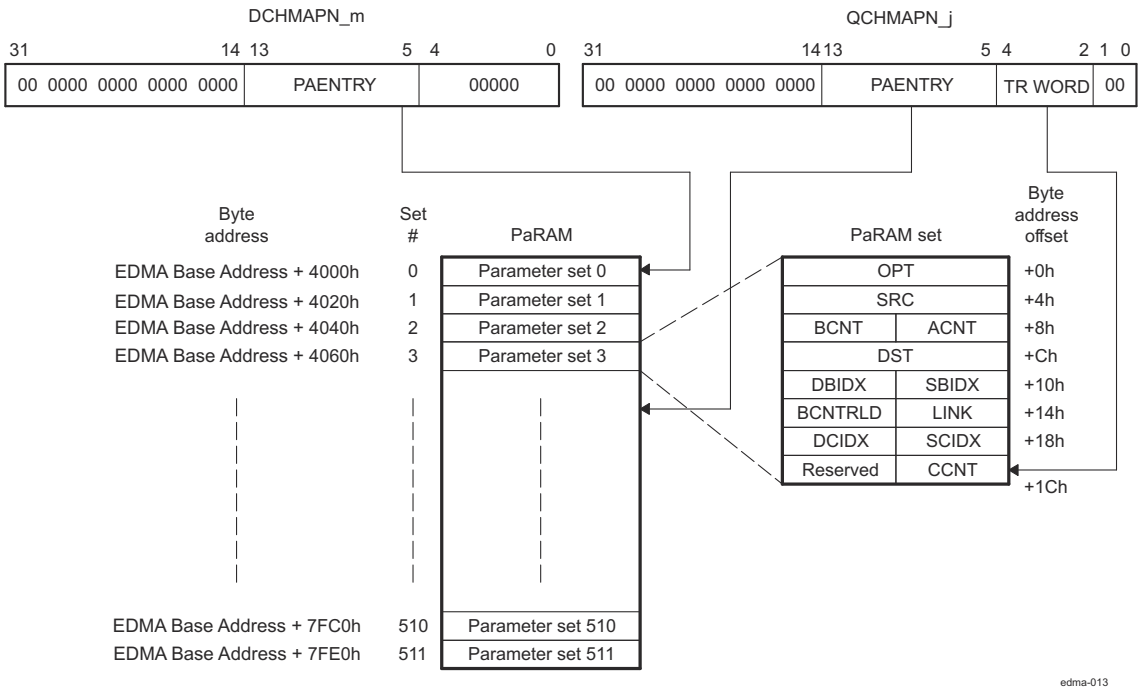

Figure 10-12. DMA Channel and QDMA Channel to PaRAM Mapping

Note

AM273x has a maximum of 128 PaRAM sets. Additional tables and diagrams in this chapter may show a larger number (up to 511), however 128 is the maximum allowed number of entries.

10.1.3.6.2 QDMA Channel to PaRAM Mapping

The mapping between the QDMA channels and the PaRAM sets is programmable. The QDMA channel mapping register EDMA_TPCC_QCHMAPN_j in the EDMA_TPCC allows to map the QDMA channels to any of the PaRAM sets in the PaRAM memory map. Figure 10-13 illustrates the use of EDMA_TPCC_QCHMAPN_j.

EDMA_TPCC_QCHMAPN_j[4:2] TRWORD bit-field allows to program the trigger word in the PaRAM set for the QDMA channel. A trigger word is one of the eight words in the PaRAM set. For a QDMA transfer to occur, a valid TR synchronization event for EDMA_TPCC is a write to the trigger word in the PaRAM set pointed to by EDMA_TPCC_QCHMAPN_j for a particular QDMA channel. By default, QDMA channels are mapped to PaRAM set 0.

It must appropriately re-map PaRAM set 0 before use.

Copyright © 2025 Texas Instruments Incorporated

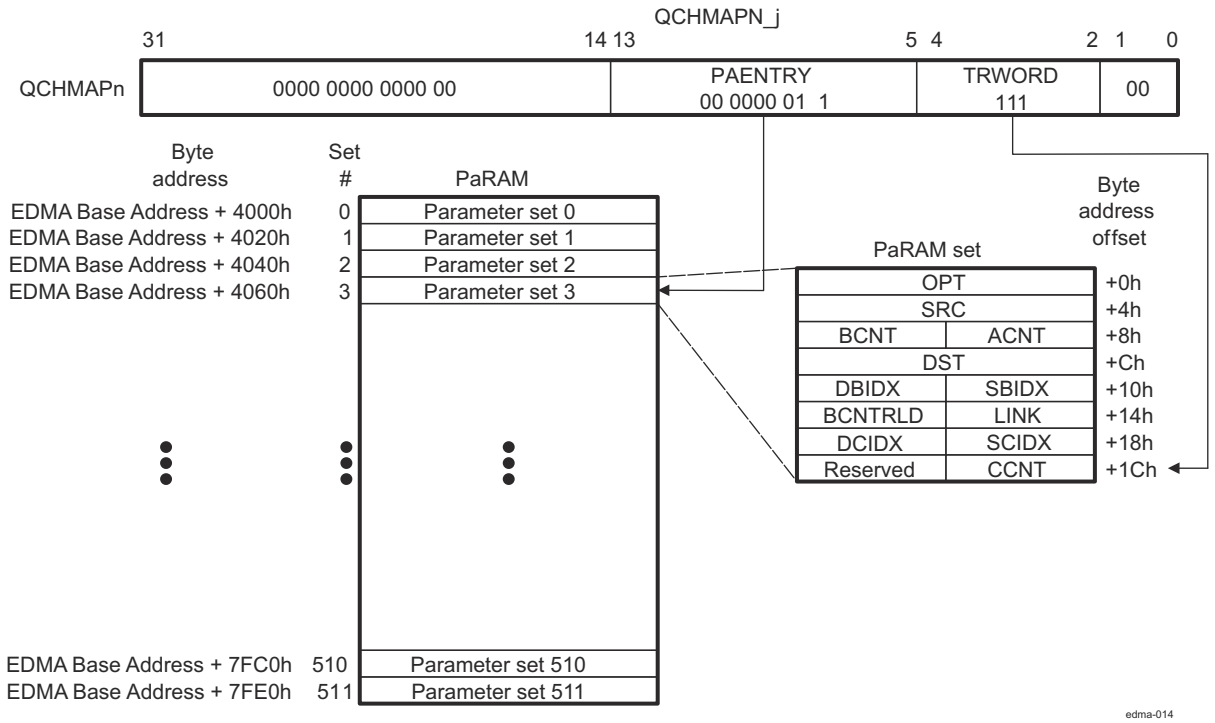

Figure 10-13. QDMA Channel to PaRAM Mapping

10.1.3.7 EDMA Channel Controller Regions

The EDMA channel controller divides its address space into eight regions. Individual channel resources are assigned to a specific region, where each region is typically assigned to a specific device module uses the EDMA controller.

Application software can use regions or to ignore them altogether. It can be used active memory protection in conjunction with regions so that only a specific device module which uses the EDMA (for example, privilege identification) or privilege level (for example, user vs. supervisor) is allowed access to a given region, and thus to a given DMA or QDMA channel. This allows robust system-level DMA code where each EDMA initiator only modifies the state of the assigned resources. Memory protection is described in Section 10.1.3.10 *Memory Protection*.

10.1.3.7.1 Region Overview

The EDMA channel controller memory-mapped registers are divided in three main categories:

1. Global registers
2. Global region channel registers
3. Shadow region channel registers

The global registers are located at a single/fixed location in the EDMA_TPCC memory map. These registers control EDMA resource mapping and provide debug visibility and error tracking information.

The channel registers (including DMA, QDMA, and interrupt registers) are accessible via the global channel region address range, or in the shadow *n* channel region address range(s). For example, the event enable register EDMA_TPCC_EER is visible at the global address of EDMA Base Address + 1020h or region addresses of EDMA Base Address + 2020h for region 0, EDMA Base Address + 2220h for region 1, … EDMA Base Address + 2E20h for region 7.

The DMA region access enable registers EDMA_TPCC_DRAEM_k and the QDMA region access enable registers EDMA_TPCC_QRAEN_k control the underlying control register bits that are accessible via the shadow region address space (except for EDMA_TPCC_IEVAL and EDMA_TPCC_IEVAL_RN_k registers). Table 10-16

Copyright © 2025 Texas Instruments Incorporated

lists the registers in the shadow region memory map. Refer to *EDMA_TPCC register mapping summary* for the complete global and shadow region memory maps.

Table 10-16. Shadow Region Registers

EDMA_TPCC_DRAEM_k	EDMA_TPCC_DRAEHM_k	EDMA_TPCC_QRAEN_k
EDMA_TPCC_ER	EDMA_TPCC_ERH	EDMA_TPCC_QER
EDMA_TPCC_ECR	EDMA_TPCC_ECRH	EDMA_TPCC_QEER
EDMA_TPCC_ESR	EDMA_TPCC_ESRH	EDMA_TPCC_QEECR
EDMA_TPCC_CER	EDMA_TPCC_CERH	EDMA_TPCC_QEESR
EDMA_TPCC_EER	EDMA_TPCC_EERH	
EDMA_TPCC_EECR	EDMA_TPCC_EECRH	
EDMA_TPCC_EESR	EDMA_TPCC_EESRH	
EDMA_TPCC_SER	EDMA_TPCC_SERH	
EDMA_TPCC_SECR	EDMA_TPCC_SECRH	
EDMA_TPCC_IER	EDMA_TPCC_IERH	
EDMA_TPCC_IECR	EDMA_TPCC_IECRH	
EDMA_TPCC_IESR	EDMA_TPCC_IESRH	
EDMA_TPCC_IPR	EDMA_TPCC_IPRH	
EDMA_TPCC_ICR	EDMA_TPCC_ICRH	
Register not affected by DRAE\DRAEH		
EDMA_TPCC_IEVAL		
EDMA_TPCC_IEVAL_RN_k		

Figure 10-14 illustrates the conceptual view of the regions.

Copyright © 2025 Texas Instruments Incorporated

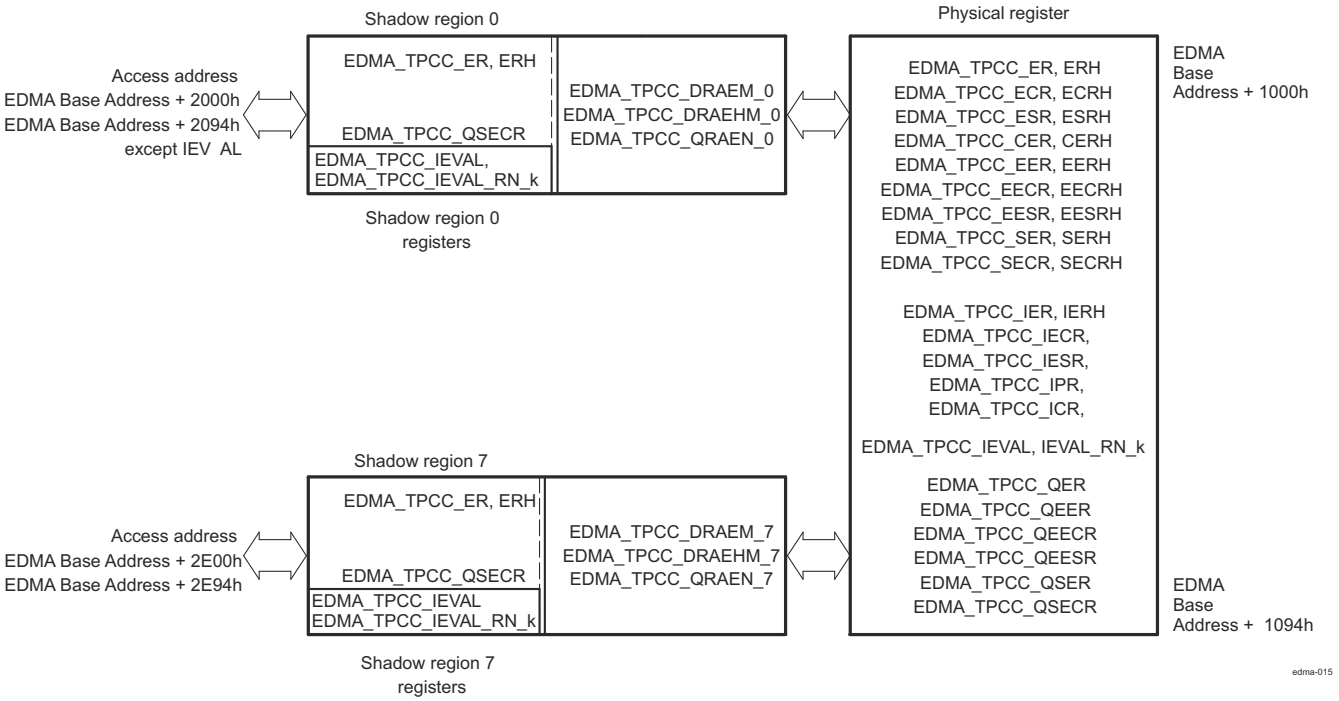

Figure 10-14. Shadow Region Registers

10.1.3.7.2 Channel Controller Regions

There are eight EDMA shadow regions (and associated memory maps). Associated with each shadow region are a set of registers defining which channels and interrupt completion codes belong to that region. These registers are user-programmed per region to assign ownership of the DMA/QDMA channels to a region.

- EDMA_TPCC_DRAEM_k and EDMA_TPCC_DRAEHM_k: One register pair exists for each of the shadow regions. The number of bits in each register pair matches the number of DMA channels (64 DMA channels). These registers need to be programmed to assign ownership of DMA channels and interrupt (or EDMA_TPCC_OPT_n[17:12] TCC codes) to the respective region. Accesses to DMA and interrupt registers via the shadow region address view are filtered through the DRAEM/DRAEHM pair. A value of 1 in the corresponding EDMA_TPCC_DRAEM_k[31:0] / EDMA_TPCC_DRAEHM_k[31:0] bit implies that the corresponding DMA interrupt channel is accessible; a value of 0 in the corresponding EDMA_TPCC_DRAEM_k[31:0] / EDMA_TPCC_DRAEHM_k[31:0] bit forces writes to be discarded and returns a value of 0 for reads.
- EDMA_TPCC_QRAEN_k: One register exists for every region. The number of bits in each register matches the number of QDMA channels (8 QDMA channels). These registers must be programmed to assign ownership of QDMA channels to the respective region. To enable a channel in a shadow region using shadow region 0 EDMA_TPCC_QEER, the corresponding bits in QRAE must be set or writing into EDMA_TPCC_QEESR there will be no the desired effect.
- EDMA_TPCC_MPPAN_k and EDMA_TPCC_MPPAG: One register exists for every region. This register defines the privilege level, requestor, and types of accesses allowed to a region's memory-mapped registers.

It is typical for an application to have a unique assignment of QDMA/DMA channels (and, therefore, a given bit position) to a given region.

The use of shadow regions allows restricted access to EDMA resources (DMA channels, QDMA channels, TCC, interrupts) by tasks in a system by setting or clearing bits in the EDMA_TPCC_DRAEM_k / EDMA_TPCC_QRAEN_k registers.

If exclusive access to any given channel / TCC code is required for a region, then only that region's EDMA_TPCC_DRAEM_k / EDMA_TPCC_QRAEN_k have the associated bit set.

Copyright © 2025 Texas Instruments Incorporated

Example 10-1. Resource Pool Division Across Two Regions

This example illustrates a resource pool division across two regions, assuming region 0 must be allocated 16 DMA channels (0-15) and 1 QDMA channel (0) and 32 TCC codes (0-15 and 48-63).

Region 1 needs to be allocated 16 DMA channels (16-32) and the remaining 7 QDMA channels (1-7) and TCC codes (16-47).

EDMA_TPCC_DRAEM_k should be equal to the OR of the bits that are required for the DMA channels and the TCC codes:

```
Region 0: DRAEHM, DRAEM = 0xFFFF0000, 0x0000FFFF QRAEN = 0x0000001
Region 1: DRAEHM, DRAEM = 0x0000FFFF, 0xFFFF0000 QRAEN = 0x00000FE
```

10.1.3.7.3 Region Interrupts

In addition to the EDMA_TPCC global completion interrupt, there is an additional completion interrupt line that is associated with every shadow region. Along with the interrupt enable register EDMA_TPCC_IER, DRAEM acts as a secondary interrupt enable for the respective shadow region interrupts. Refer to *Hardware Request* for more information about EDMA Interrupts.

10.1.3.8 Chaining EDMA Channels

The channel chaining capability for the EDMA allows the completion of an EDMA channel transfer to trigger another EDMA channel transfer. The purpose is to allow the ability to chain several events through one event occurrence.

Chaining is different from linking (Section 10.1.3.3.7 *Linking Transfers*). The EDMA link feature reloads the current channel parameter set with the linked parameter set. The EDMA chaining feature does not modify or update any channel parameter set. It provides a synchronization event to the chained channel (see Section 10.1.3.4.1.3 *Chain-Triggered Transfer Request*).

Chaining is achieved at either final transfer completion or intermediate transfer completion, or both, of the current channel. Consider a channel *m* (DMA/QDMA) required to chain to channel *n*. Channel number *n* (0-63) needs to be programmed into the EDMA_TPCC_OPT_n[17:12] TCC bit-field of channel *m* channel options parameter (OPT) set.

- If final transfer completion chaining EDMA_TPCC_OPT_n[22] TCCHEN = 1 is enabled, the chain-triggered event occurs after the submission of the last transfer request of channel *m* is either submitted or completed (depending on early or normal completion).

Copyright © 2025 Texas Instruments Incorporated

- If intermediate transfer completion chaining EDMA_TPCC_OPT_n[23] ITCCHEN = 1 is enabled, the chain-triggered event occurs after every transfer request, except the last of channel *m* is either submitted or completed (depending on early or normal completion).
- If both final and intermediate transfer completion chaining (EDMA_TPCC_OPT_n[22] TCCHEN = 1 and EDMA_TPCC_OPT_n[23] ITCCHEN = 1) are enabled, then the chain-trigger event occurs after every transfer request is submitted or completed (depending on early or normal completion).

Table 10-17 illustrates the number of chain event triggers occurring in different synchronized scenarios. Consider channel 31 programmed with EDMA_TPCC_ABCNT_n[15:0] ACNT = 3, EDMA_TPCC_ABCNT_n[31:16] BCNT = 4, EDMA_TPCC_CCNT_n[15:0] CCNT = 5, and EDMA_TPCC_OPT_n[17:12] TCC = 30.

Table 10-17. Chain Event Triggers

	(Number of chained event triggers on channel 30)	
Options	**A-Synchronized**	**AB-Synchronized**
EDMA_TPCC_OPT_n[22] TCCHEN = 1, EDMA_TPCC_OPT_n[23] ITCCHEN = 0	1 (Owing to the last TR)	1 (Owing to the last TR)
EDMA_TPCC_OPT_n[22] TCCHEN = 0, EDMA_TPCC_OPT_n[23] ITCCHEN = 1	19 (Owing to all but the last TR)	4 (Owing to all but the last TR)
EDMA_TPCC_OPT_n[22] TCCHEN = 1, EDMA_TPCC_OPT_n[23] ITCCHEN = 1	20 (Owing to a total of 20 TRs)	5 (Owing to a total of 5 TRs)

10.1.3.9 EDMA Interrupts

The EDMA interrupts are divided into 2 categories: transfer completion interrupts and error interrupts.

There are nine region interrupts, eight shadow regions and one global region. The transfer completion interrupts are listed in Table 10-18. The transfer completion interrupts and the error interrupts from the transfer controllers are all routed to the device interrupt controllers INTCs.

Table 10-18. EDMA Transfer Completion Interrupts

Name	Description
EDMA_TPCC_INT0	EDMA_TPCC Transfer Completion Interrupt Shadow Region 0
EDMA_TPCC_INT1	EDMA_TPCC Transfer Completion Interrupt Shadow Region 1
EDMA_TPCC_INT2	EDMA_TPCC Transfer Completion Interrupt Shadow Region 2
EDMA_TPCC_INT3	EDMA_TPCC Transfer Completion Interrupt Shadow Region 3
EDMA_TPCC_INT4	EDMA_TPCC Transfer Completion Interrupt Shadow Region 4
EDMA_TPCC_INT5	EDMA_TPCC Transfer Completion Interrupt Shadow Region 5
EDMA_TPCC_INT6	EDMA_TPCC Transfer Completion Interrupt Shadow Region 6
EDMA_TPCC_INT7	EDMA_TPCC Transfer Completion Interrupt Shadow Region 7

Table 10-19. EDMA Error Interrupts

Name	Description
EDMA_TPCC_ERRINT	EDMA_TPCC Error Interrupt
EDMA_TPCC_MPINT	EDMA_TPCC Memory Protection Interrupt
EDMA_TC0_ERRINT	TC0 Error Interrupt
EDMA_TC1_ERRINT	TC1 Error Interrupt

10.1.3.9.1 Transfer Completion Interrupts

The EDMA_TPCC is responsible for generating transfer completion interrupts to the CPU(s) (and other EDMA controllers). The EDMA generates a single completion interrupt per shadow region, as well as one for the global region on behalf of all 64 channels. The various control registers and bit fields facilitate EDMA interrupt generation.

The software architecture must either use the global interrupt or the shadow interrupts, but not both.

Copyright © 2025 Texas Instruments Incorporated

The transfer completion code EDMA_TPCC_OPT_n[17:12] TCC value is directly mapped to the bits of the interrupt pending register EDMA_TPCC_IPR / EDMA_TPCC_IPRH.

For example, if EDMA_TPCC_OPT_n[17:12] TCC = 10 0001b, EDMA_TPCC_IPRH[1] is set after transfer completion, and results in interrupt generation to the CPU(s) if the completion interrupt is enabled for the CPU. See Section 10.1.3.9.1.1 *Enabling Transfer Completion Interrupts* for details about enabling EDMA transfer completion interrupts.

When a completion code is returned (as a result of early or normal completions), the corresponding bit in EDMA_TPCC_IPR / EDMA_TPCC_IPRH registers is set if transfer completion interrupt (final/intermediate) is enabled in the channel options parameter (OPT) for a PaRAM set associated with the transfer.

Table 10-20. Transfer Complete Code (TCC) to EDMA_TPCC Interrupt Mapping

TCC values in EDMA_TPCC_OPT_n[17:12] TCC (EDMA_TPCC_OPT_n[20] TCINTEN / EDMA_TPCC_OPT_n[21] ITCINTEN = 1)	EDMA_TPCC_IPR Bit Set	TCC values in EDMA_TPCC_OPT_n[17:12] TCC (EDMA_TPCC_OPT_n[20] TCINTEN / EDMA_TPCC_OPT_n[21] ITCINTEN = 1)	EDMA_TPCC_IPRH Bit Set(1)
0	EDMA_TPCC_IPR[0]	20h	EDMA_TPCC_IPR[32] / EDMA_TPCC_IPRH[0]
1	EDMA_TPCC_IPR[1]	21h	EDMA_TPCC_IPR[33] / EDMA_TPCC_IPRH[1]
2h	EDMA_TPCC_IPR[2]	22h	EDMA_TPCC_IPR[34] / EDMA_TPCC_IPRH[2]
3h	EDMA_TPCC_IPR[3]	23h	EDMA_TPCC_IPR[35] / EDMA_TPCC_IPRH[3]
4h	EDMA_TPCC_IPR[4]	24h	EDMA_TPCC_IPR[36] / EDMA_TPCC_IPRH[4]
...	...	...	...
1Eh	EDMA_TPCC_IPR[30]	3Eh	EDMA_TPCC_IPR[62] / EDMA_TPCC_IPRH[30]
1Fh	EDMA_TPCC_IPR[31]	3Fh	EDMA_TPCC_IPR[63] / EDMA_TPCC_IPRH[31]

(1) Bit fields EDMA_TPCC_IPR [32-63] correspond to bits 0 to 31 in EDMA_TPCC_IPRH, respectively.

The transfer completion code (TCC) can program to any value for a DMA/QDMA channel. A direct relation between the channel number and the transfer completion code value does not need to exist. This allows multiple channels having the same transfer completion code value to cause a CPU to execute the same interrupt service routine (ISR) for different channels.

If the channel is used in the context of a shadow region and it intends for the shadow region interrupt to be asserted, then ensure that the bit corresponding to the TCC code is enabled in EDMA_TPCC_IER / EDMA_TPCC_IERH and in the corresponding shadow region's DMA region access registers (EDMA_TPCC_DRAEM_k / EDMA_TPCC_DRAEHM_k).

Interrupt generation can be enabled at either final transfer completion or intermediate transfer completion, or both. Consider channel *m* as an example.

- If the final transfer interrupt (EDMA_TPCC_OPT_n[20] TCINTEN = 1) is enabled, the interrupt occurs after the last transfer request of channel *m* is either submitted or completed (depending on early or normal completion).
- If the intermediate transfer interrupt (EDMA_TPCC_OPT_n[21] ITCINTEN = 1) is enabled, the interrupt occurs after every transfer request, except the last TR of channel *m* is either submitted or completed (depending on early or normal completion).

Copyright © 2025 Texas Instruments Incorporated

- If both final and intermediate transfer completion interrupts (EDMA_TPCC_OPT_n[20] TCINTEN = 1, and EDMA_TPCC_OPT_n[21] ITCINTEN = 1) are enabled, then the interrupt occurs after every transfer request is submitted or completed (depending on early or normal completion).

Table 10-21 shows the number of interrupts that occur in different synchronized scenarios. Consider channel 31, programmed with ABCNT_n[15:0] ACNT = 3, EDMA_TPCC_ABCNT_n[31:16] BCNT = 4, EDMA_TPCC_CCNT_n[15:0]CCNT = 5, and EDMA_TPCC_OPT_n[17:12] TCC = 30.

Table 10-21. Number of Interrupts

Options	A-Synchronized	AB-Synchronized
EDMA_TPCC_OPT_n[20] TCINTEN = 1, EDMA_TPCC_OPT_n[21] ITCINTEN = 0	1 (Last TR)	1 (Last TR)
EDMA_TPCC_OPT_n[20] TCINTEN = 0, EDMA_TPCC_OPT_n[21] ITCINTEN = 1	19 (All but the last TR)	4 (All but the last TR)
EDMA_TPCC_OPT_n[20] TCINTEN = 1, EDMA_TPCC_OPT_n[21] ITCINTEN = 1	20 (All TRs)	5 (All TRs)

10.1.3.9.1.1 Enabling Transfer Completion Interrupts

For the EDMA channel controller to assert a transfer completion to the external environment, the interrupts must be enabled in the EDMA_TPCC. This is in addition to setting up the EDMA_TPCC_OPT_n[20] TCINTEN and EDMA_TPCC_OPT_n[21] ITCINTEN bits of the associated PaRAM set.

The EDMA channel controller has interrupt enable registers EDMA_TPCC_IER / EDMA_TPCC_IERH and each bit location in EDMA_TPCC_IER / EDMA_TPCC_IERH serves as a primary enable for the corresponding interrupt pending registers EDMA_TPCC_IPR / EDMA_TPCC_IPRH.

All of the interrupt registers (EDMA_TPCC_IER, EDMA_TPCC_IESR, EDMA_TPCC_IECR, and EDMA_TPCC_IPR) are either manipulated from the global DMA channel region, or by the DMA channel shadow regions. The shadow regions provide a view to the same set of physical registers that are in the global region.

The EDMA channel controller has a hierarchical completion interrupt scheme that uses a single set of interrupt pending registers EDMA_TPCC_IPR / EDMA_TPCC_IPRH and single set of interrupt enable registers EDMA_TPCC_IER / EDMA_TPCC_IERH. The programmable DMA region access enable registers EDMA_TPCC_DRAEM_k / EDMA_TPCC_DRAEHM_k provides a second level of interrupt masking. The global region interrupt output is gated based on the enable mask that is provided by EDMA_TPCC_IER / EDMA_TPCC_IERH, see Figure 10-15

The region interrupt outputs are gated by EDMA_TPCC_IER and the specific EDMA_TPCC_DRAEM_k / EDMA_TPCC_DRAEHM_k associated with the region.

Figure 10-15 shows the Interrupt diagram of the EDMA controller.

Copyright © 2025 Texas Instruments Incorporated

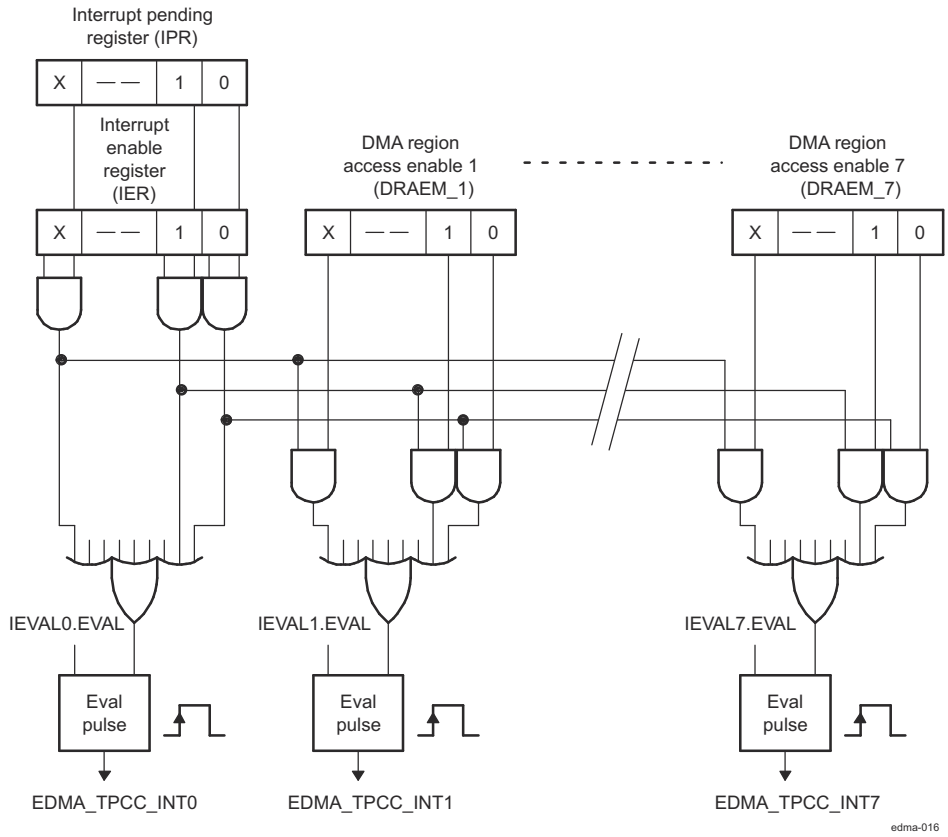

Figure 10-15. Interrupt Diagram

The EDMA_TPCC generates the transfer completion interrupts that are associated with each shadow region, the following conditions must be true:

- EDMA_TPCC_INT0: (EDMA_TPCC_IPR[0] E0 & EDMA_TPCC_IER[0] E0 & EDMA_TPCC_DRAEM_k.DRAEM_0[0] E0) | (EDMA_TPCC_IPR[1] E1 & EDMA_TPCC_IER[1] E1 & EDMA_TPCC_DRAEM_k.DRAEM_0[1] E1) | …|(EDMA_TPCC_IPRH[31] E63 & EDMA_TPCC_IERH[31] E63 & EDMA_TPCC_DRAEHM_k.DRAEHM_0[31] E63)
- EDMA_TPCC_INT1: (EDMA_TPCC_IPR[0] E0 & EDMA_TPCC_IER[0] E0 & EDMA_TPCC_DRAEM_k.DRAEM_1[0] E0) | (EDMA_TPCC_IPR[1] E1 & EDMA_TPCC_IER[1] E1 & EDMA_TPCC_DRAEM_k.DRAEM_1[1] E1) | …| (EDMA_TPCC_IPRH[31] E63 & EDMA_TPCC_IERH[31] E63 & EDMA_TPCC_DRAEHM_k.DRAEHM_1[31] E63)
- EDMA_TPCC_INT2: (EDMA_TPCC_IPR[0] E0 & EDMA_TPCC_IER[0] E0 & EDMA_TPCC_DRAEM_k.DRAEM_2[0] E0) | (EDMA_TPCC_IPR[1] E1 & EDMA_TPCC_IER[1] E1 & EDMA_TPCC_DRAEM_k.DRAEM_2[1] E1) | …|(EDMA_TPCC_IPRH[31] E63 & EDMA_TPCC_IERH[31] E63 & EDMA_TPCC_DRAEHM_k.DRAEHM_2[31] E63)....
- Up to EDMA_TPCC_INT7: (EDMA_TPCC_IPR[0] E0 & EDMA_TPCC_IER[0] E0 & EDMA_TPCC_DRAEM_k.DRAEM_7[0] E0) | (EDMA_TPCC_IPR[1] E1 & EDMA_TPCC_IER[1] E1 & EDMA_TPCC_DRAEM_k.DRAEM_7[1] E1) | …|(EDMA_TPCC_IPRH[31] E63 & EDMA_TPCC_IERH[31] E63 & EDMA_TPCC_DRAEHM_k.DRAEHM_7[31] E63)

Copyright © 2025 Texas Instruments Incorporated

Note

The EDMA_TPCC_DRAEM_k / EDMA_TPCC_DRAEHM_k for all regions are expected to be set up at system initialization and to remain static for an extended period of time. The interrupt enable registers are used for dynamic enable/disable of individual interrupts.

Because there is no relation between the EDMA_TPCC_OPT_n[17:12] TCC value and the DMA/QDMA channel, it is possible, the DMA channel 0 to have the EDMA_TPCC_OPT_n[17:12] TCC = 63 in its associated PaRAM set. This mean that if a transfer completion interrupt is enabled (EDMA_TPCC_OPT_n[20] TCINTEN or EDMA_TPCC_OPT_n[21] ITCINTEN is set), then based on the TCC value, EDMA_TPCC_IPRH[31] E63 is set up on completion. For proper channel operations and interrupt generation using the shadow region map - program the EDMA_TPCC_DRAEM_k / EDMA_TPCC_DRAEHM_k that is associated with the shadow region to have read/write access to both bit 0 (corresponding to channel 0) and bit 63 (corresponding to EDMA_TPCC_IPRH bit that is set upon completion).

10.1.3.9.1.2 Clearing Transfer Completion Interrupts

Transfer completion interrupts that are latched to the interrupt pending registers (EDMA_TPCC_IPR / EDMA_TPCC_IPRH) are cleared by writing a 1 to the corresponding bit in the interrupt pending clear register (EDMA_TPCC_ICR / EDMA_TPCC_ICRH). For example, a write of 1 to EDMA_TPCC_ICR[0] E0 clears a pending interrupt in EDMA_TPCC_IPR[0] E0.

If an incoming transfer completion code TCC (EDMA_TPCC_OPT_n[17:12] TCC) gets latched to a bit in EDMA_TPCC_IPR / EDMA_TPCC_IPRH, then additional bits that get set due to a subsequent transfer completion does not result in asserting the EDMA_TPCC completion interrupt. In order for the completion interrupt to be pulsed, the required transition is from a state where no enabled interrupts are set to a state where at least one enabled interrupt is set.

10.1.3.9.2 EDMA Interrupt Servicing

Upon completion of a transfer (early or normal completion), the EDMA channel controller sets the appropriate bit in the interrupt pending registers (EDMA_TPCC_IPR / EDMA_TPCC_IPRH), as the transfer completion codes specify. If the completion interrupts are appropriately enabled, then the CPU enters the interrupt service routine (ISR) when the completion interrupt is asserted.

After servicing the interrupt, the ISR should clear the corresponding bit in EDMA_TPCC_IPR/ EDMA_TPCC_IPRH, thereby enabling recognition of future interrupts. The EDMA_TPCC only asserts additional completion interrupts when all EDMA_TPCC_IPR / EDMA_TPCC_IPRH bits clear.

When one interrupt is serviced many other transfer completions may result in additional bits being set in EDMA_TPCC_IPR / EDMA_TPCC_IPRH, thereby resulting in additional interrupts. Each of the bits in EDMA_TPCC_IPR / EDMA_TPCC_IPRH may need different types of service therefore, the ISR must check all pending interrupts and continue until all of the posted interrupts are serviced appropriately.

Examples of pseudo code for a CPU interrupt service routine for an EDMA_TPCC completion interrupt are shown in Example 10-2 and Example 10-3.

The ISR routine in Example 10-2 is more exhaustive and incurs a higher latency.

Example 10-2. Interrupt Servicing

The pseudo code:

1. Reads the interrupt pending register EDMA_TPCC_IPR / EDMA_TPCC_IPRH.
2. Performs the operations needed.
3. Writes to the interrupt pending clear register EDMA_TPCC_ICR / EDMA_TPCC_ICRH to clear the corresponding EDMA_TPCC_IPR / EDMA_TPCC_IPRH bit(s).
4. Reads EDMA_TPCC_IPR / EDMA_TPCC_IPRH again:

Copyright © 2025 Texas Instruments Incorporated

a. If EDMA_TPCC_IPR / EDMA_TPCC_IPRH is not equal to 0, repeat from step 2 (implies occurrence of new event between step 2 to step 4).
b. If EDMA_TPCC_IPR / EDMA_TPCC_IPRH is equal to 0, assure that all of the enabled interrupts are inactive.

Note

An event may occur during step 4 while the EDMA_TPCC_IPR / EDMA_TPCC_IPRH bits are read as 0 and the application is still in the interrupt service routine. If this happens, a new interrupt is recorded in the device interrupt controller and a new interrupt generates as soon as the application exits in the interrupt service routine.

10.1.3.9.3

Example 10-3 is less rigorous, with less burden on the software in polling for set interrupt bits, but can occasionally cause a race condition as mentioned above.

Example 10-3. Interrupt Servicing

If any enabled and pending (possibly lower priority) interrupts are left, force the interrupt logic to reassert the interrupt pulse by setting the EDMA_TPCC_IEVAL[0] EVAL bit in the interrupt evaluation register.

The pseudo code is as follows:

1. Enters ISR.
2. Reads EDMA_TPCC_IPR / EDMA_TPCC_IPRH.
3. For the condition that is set in EDMA_TPCC_IPR / EDMA_TPCC_IPRH:
   a. Service interrupt as the application requires.
   b. Clear the bit for serviced conditions (others may still be set, and other transfers may have resulted in returning the TCC to EDMA_TPCC after step 2).
4. Reads EDMA_TPCC_IPR / EDMA_TPCC_IPRH prior to exiting the ISR:
   a. If EDMA_TPCC_IPR / EDMA_TPCC_IPRH is equal to 0, then exit the ISR.
   b. If EDMA_TPCC_IPR / EDMA_TPCC_IPRH is not equal to 0, then set EDMA_TPCC_IEVAL so that upon exit of ISR, a new interrupt triggers if any enabled interrupts are still pending.

10.1.3.9.4 Interrupt Evaluation Operations

The EDMA_TPCC has interrupt evaluate registers EDMA_TPCC_IEVAL that exist in the global region and in each shadow region. The registers in the shadow region are the only registers in the DMA channel shadow region memory map that are not affected by the settings for the DMA region access enable registers EDMA_TPCC_DRAEM_k / EDMA_TPCC_DRAEHM_k. Writing a 1 to the EDMA_TPCC_IEVAL[0] EVAL bit in the registers that are associated with a particular shadow region results in pulsing the associated region interrupt (global or shadow), if any enabled interrupt (via EDMA_TPCC_IER / EDMA_TPCC_IERH) is still pending EDMA_TPCC_IPR / EDMA_TPCC_IPRH. This register assures that the CPU does not miss the interrupts (or the EDMA controller associated with the shadow region) if the software architecture chooses not to use all interrupts. Refer to Example 10-3 about the use of EDMA_TPCC_IEVAL in the EDMA interrupt service routine (ISR).

Similarly an error evaluation register EDMA_TPCC_EEVAL exists in the global region. Writing a 1 to the EDMA_TPCC_EEVAL[0] EVAL bit causes the pulsing of the error interrupt if any pending errors are in EDMA_TPCC_EMR / EDMA_TPCC_EMRH, EDMA_TPCC_QEMR, or EDMA_TPCC_CCERR. See Section 10.1.3.9.5 *Error Interrupts* for additional information regarding error interrupts.

Copyright © 2025 Texas Instruments Incorporated

Note

While using EDMA_TPCC_IEVAL for shadow region completion interrupts, check that the EDMA_TPCC_IEVAL operated upon is from that particular shadow region memory map.

Copyright © 2025 Texas Instruments Incorporated

10.1.3.9.5 Error Interrupts

The EDMA_TPCC error registers provide the capability to differentiate error conditions (event missed, threshold exceed, etc.). Additionally, setting the error bits in these registers results in asserting the EDMA_TPCC error interrupt. If the EDMA_TPCC error interrupt is enabled in the device interrupt controller(s), then it allows the CPU(s) to handle the error conditions.

The EDMA_TPCC has a single error interrupt (EDMA_TPCC_ERRINT) that is asserted for all EDMA_TPCC error conditions. There are four conditions that cause the error interrupt:

- DMA missed events: for all 64 DMA channels. DMA missed events are latched in the event missed registers EDMA_TPCC_EMR / EDMA_TPCC_EMRH.
- QDMA missed events: for all 8 QDMA channels. QDMA missed events are latched in the QDMA event missed register EDMA_TPCC_QEMR.
- Threshold exceed: for all event queues. These are latched in EDMA_TPCC error register EDMA_TPCC_CCERR.
- TCC error: for outstanding transfer requests that are expected to return completion code EDMA_TPCC_OPT_n[22] TCCHEN or EDMA_TPCC_OPT_n[23] TCINTEN bit is set to 1, exceeding the maximum limit of 63. This is also latched in the EDMA_TPCC error register EDMA_TPCC_CCERR.

Figure 10-16 illustrates the EDMA_TPCC error interrupt generation operation.

If any of the bits are set in the error registers due to any error condition, the EDMA_TPCC_ERRINT is always asserted, as there are no enables for masking these error events. Similar to transfer completion interrupts (EDMA_TPCC_INT), the error interrupt also only pulses when the error interrupt condition transitions from no errors being set to at least one error being set. If additional error events are latched prior to the original error bits clearing, the EDMA_TPCC does not generate additional interrupt.

To reduce the burden on the software, there is an error evaluate register EDMA_TPCC_EEVAL that allows re-evaluation of pending set error events/bits, similar to the interrupt evaluate register EDMA_TPCC_IEVAL. Unlike the EDMA_TPCC_IEVAL functionality, the EDMA_TPCC_EEVAL register must be written with ‘1’ after any error interrupts are serviced (even when all pending errors are cleared) in order for subsequent errors to trigger a new interrupt.

Note

It is good practice to enable the error interrupt in the device interrupt controller and to associate an interrupt service routine with it to address the various error conditions appropriately. Doing so puts less burden on the software (polling for error status), it provides a good debug mechanism for unexpected error conditions.

Copyright © 2025 Texas Instruments Incorporated

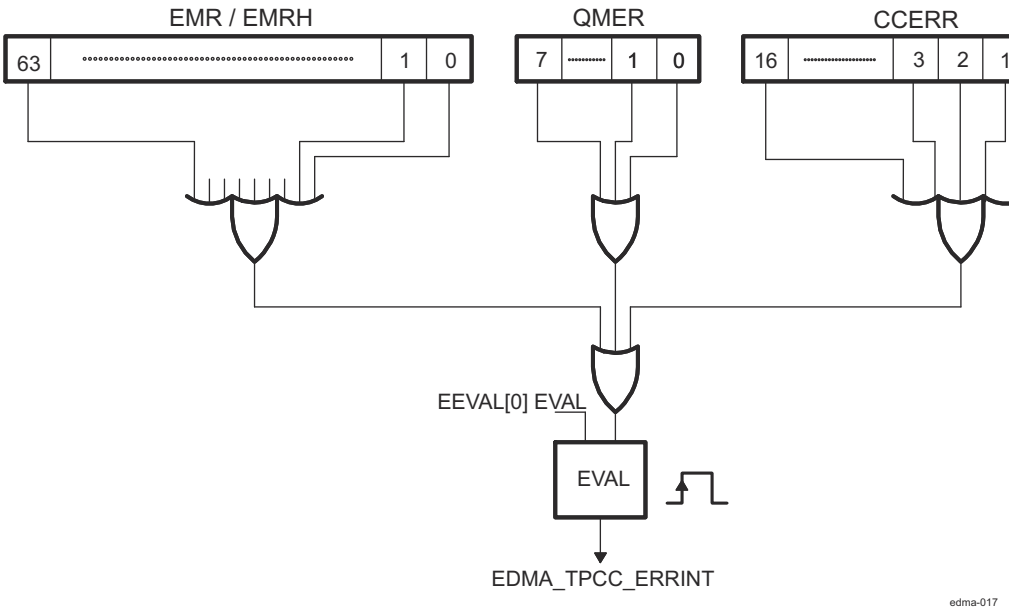

Figure 10-16. Error Interrupt Operation

Copyright © 2025 Texas Instruments Incorporated

10.1.3.10 Memory Protection

The EDMA channel controller supports two kinds of memory protection: active and proxy.

10.1.3.10.1 Active Memory Protection

Active memory protection is a feature that allows or prevents read and write accesses to the EDMA_TPCC registers. Active memory protection is achieved by a set of memory protection permissions attribute EDMA_TPCC_MPPAN_k registers.

The EDMA_TPCC register map is divided into three categories:

- a global region.
- a global channel region.
- eight shadow regions.

Each shadow region consists of the respective shadow region registers and the associated PaRAM. For more detailed information regarding the contents of a shadow region, refer to the associated Register Addendum.

Each of the eight shadow regions has an associated EDMA_TPCC_MPPAN_k registers that defines the specific requestor(s) and types of requests that are allowed to the regions resources.

The global channel region is also protected with a memory-mapped register EDMA_TPCC_MPPAG. The EDMA_TPCC_MPPAG applies to the global region and to the global channel region, except the other EDMA_TPCC_MPPAN_k registers themselves.

Table 10-22 shows the accesses that are allowed or not allowed to the EDMA_TPCC_MPPAG and EDMA_TPCC_MPPAN_k. The active memory protection uses the EDMA_TPCC_OPT_n[31] PRIV and EDMA_TPCC_OPT_n[27:24] PRIVID attributes of the EDMA peripheral modules. TheEDMA_TPCC_OPT_n[31] PRIV is the privilege level (i.e., user vs. supervisor).

The EDMA_TPCC_OPT_n[27:24] PRIVID refers to a privilege ID with a number that is associated with an EDMA peripheral modules.

Table 10-22. Allowed Accesses

Access	Supervisor	User
Read	Yes	Yes
Write	Yes	No

Table 10-23 describes the EDMA_TPCC_MPPAN_k register mapping for the shadow regions (which includes shadow region registers and PaRAM addresses).

The region-based EDMA_TPCC_MPPAN_k registers are used to protect accesses to the DMA shadow regions and the associated region PaRAM. Because there are eight regions, there are eight EDMA_TPCC_MPPAN_k region registers (MPPA[0-7]).

Table 10-23. MPPA Registers to Region Assignment

Register	Registers Protect	Address Range	PaRAM Protect(1)	Address Range
EDMA_TPCC_MPPAG	Global Range	0000h-1FFCh	N/A	N/A
EDMA_TPCC_MPPAN_k. MPPAN_0	DMA Shadow 0	2000h-21FCh	1st octant	4000h-47FCh
MPPAN_1	DMA Shadow 1	2200h-23FCh	2nd octant	4800h-4FFCh
MPPAN_2	DMA Shadow 2	2400h-25FCh	3rd octant	5000h-57FCh
MPPAN_3	DMA Shadow 3	2600h-27FCh	4th octant	5800h-5FFCh
MPPAN_4	DMA Shadow 4	2800h-29FCh	5th octant	6000h-67FCh
MPPAN_5	DMA Shadow 5	2A00h-2BFCh	6th octant	6800h-6FFCh
MPPAN_6	DMA Shadow 6	2C00h-2DFCh	7th octant	7000h-77FCh

Copyright © 2025 Texas Instruments Incorporated

Table 10-23. MPPA Registers to Region Assignment (continued)

Register	Registers Protect	Address Range	PaRAM Protect(1)	Address Range
MPPAN_7	DMA Shadow 7	2E00h-2FFCh	8th octant	7800h-7FFCh

(1) The PARAM region is divided into 8 regions referred to as an octant.

Example *Access denied.*

Write access to shadow region 7's event enable set register EDMA_TPCC_EESR:

1. The original value of the event enable register EDMA_TPCC_EER at address offset 0x1020 is 0x0.
2. The EDMA_TPCC_MPPAN_k. EDMA_TPCC_MPPAN_7[7] NS is set to prevent user level accesses (EDMA_TPCC_MPPAN_k. EDMA_TPCC_MPPAN_7[1] UW = 0, EDMA_TPCC_MPPAN_k. EDMA_TPCC_MPPAN_7[2] UR = 0), but it allows supervisor level accesses (EDMA_TPCC_MPPAN_k. EDMA_TPCC_MPPAN_7[4] SW = 1, EDMA_TPCC_MPPAN_k. EDMA_TPCC_MPPAN_7[5] SR = 1) with a privilege ID of 0. (EDMA_TPCC_MPPAN_k. EDMA_TPCC_MPPAN_7[10] AID0 = 1).
3. EDMA peripheral modules with a privilege ID of 0 attempts to perform a user-level write of a value of 0xFF00FF00 to shadow region 7's event enable set register EDMA_TPCC_EESR at address offset 0x2E30.

Note

The EDMA_TPCC_EER is a read-only register and the only way that write to it is by writing to the EDMA_TPCC_EESR. There is only one physical register for EDMA_TPCC_EER, EDMA_TPCC_EESR, etc. and that the shadow regions only provide to the same physical set.

4. Since the EDMA_TPCC_MPPAN_k. EDMA_TPCC_MPPAN_7[1] UW = 0, though the privilege ID of the write access is set to 0, the access is not allowed and the EDMA_TPCC_EER is not written too.

Example *Access Allowed*

Write access to shadow region 7's event enable set register EDMA_TPCC_EESR:

1. The original value of the event enable register EDMA_TPCC_EER at address offset 0x1020 is 0x0.
2. The EDMA_TPCC_MPPAN_k.EDMA_TPCC_MPPAN_7 is set to allow user-level accesses (EDMA_TPCC_MPPAN_k.EDMA_TPCC_MPPAN_7[1] UW = 1, EDMA_TPCC_MPPAN_k. EDMA_TPCC_MPPAN_7[2] UR = 1) and supervisor-level accesses (EDMA_TPCC_MPPAN_k. EDMA_TPCC_MPPAN_7[4] SW = 1, EDMA_TPCC_MPPAN_k. EDMA_TPCC_MPPAN_7[5] SR = 1) with a privilege ID of 0. (EDMA_TPCC_MPPAN_k. EDMA_TPCC_MPPAN_7[10] AID0 = 1).
3. EDMA peripheral modules with a privilege ID of 0, attempts to perform a user-level write of a value of 0xABCD0123 to shadow region 7's event enable set register EDMA_TPCC_EESR at address offset 0x2E30.

Note

The EDMA_TPCC_EER is a read-only register and the only way that write to it is by writing to the EDMA_TPCC_EESR. There is only one physical register for EDMA_TPCC_EER, EDMA_TPCC_EESR, etc. and that the shadow regions only provide to the same physical set.

4. Since the EDMA_TPCC_MPPAN_k. EDMA_TPCC_MPPAN_7[1] UW = 1 and EDMA_TPCC_MPPAN_k. MPPAN_7[10] AID0 = 1, the user-level write access is allowed.
5. The accesse to shadow region registers are masked by their respective EDMA_TPCC_DRAEM_k register. In this example, the EDMA_TPCC_DRAEM_k. EDMA_TPCC_DRAEM_7 is set of 0x9FF00FC2.
6. The value finally written to EDMA_TPCC_EER is 0x8BC00102.

10.1.3.10.2 Proxy Memory Protection

Proxy memory protection allows an EDMA transfer programmed by a given peripheral module connected to EDMA, to have its permissions travel with the transfer through the EDMA_TPTC. The permissions travel along with the read transactions to the source and the write transactions to the destination endpoints. The EDMA_TPCC_OPT_n[31] PRIV bit and EDMA_TPCC_OPT_n[27:24] PRIVID bit is set with the peripheral module's PRIV value and PRIVID values, respectively, when any part of the PaRAM set is written.

Copyright © 2025 Texas Instruments Incorporated

The EDMA_TPCC_OPT_n[31] PRIV is the privilege level (i.e., user vs. supervisor). The EDMA_TPCC_OPT_n[27:24] PRIVID refers to a privilege ID with a number that is associated with an peripheral module connected to EDMA.

These options are part of the TR that are submitted to the transfer controller. The transfer controller uses the above values on their respective read and write command bus so that the target endpoints can perform memory protection checks based on these values.

Consider a parameter set that is programmed by a CPU in user privilege level for a simple transfer with the source buffer on an L2 page and the destination buffer on an L1D page. The EDMA_TPCC_OPT_n[31] PRIV is 0 for user-level and the CPU has a EDMA_TPCC_OPT_n[27:24] PRIVID to 0.

The PaRAM set is shown in Figure 10-17.

Figure 10-17. PaRAM Set Content for Proxy Memory Protection Example

(a) EDMA Parameters

Parameter Contents		Parameter	
0010 0007h		Channel Options Parameter (OPT)	
009F 0000h		Channel Source Address (SRC)	
0001h	0004h	Count for 2nd Dimension (BCNT)	Count for 1st Dimension (ACNT)
00F0 7800h		Channel Destination Address (DST)	
0001h	0001h	Destination BCNT Index (DBIDX)	Source BCNT Index (SBIDX)
0000h	FFFFh	BCNT Reload (BCNTRLD)	Link Address (LINK)
0001h	1000h	Destination CCNT Index (DCIDX)	Source CCNT Index (SCIDX)
0000h	0001h	Reserved	Count for 3rd Dimension (CCNT)

(b) Channel Options Parameter (OPT_n) Content

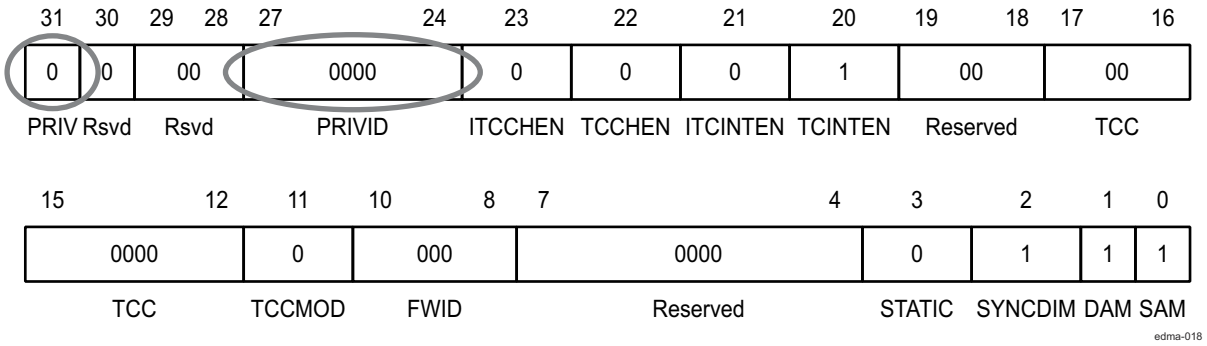

Figure 10-18. Channel Options Parameter (OPT) Example

The EDMA_TPCC_OPT_n[31] PRIV and EDMA_TPCC_OPT_n[27:24] PRIVID information travels along with the read and write requests that are issued to the source and destination memories.

For example, if the access attributes that are associated with the L2 page with the source buffer only allow supervisor read, write accesses (EDMA_TPCC_MPPAN_k[4] SW and EDMA_TPCC_MPPAN_k[5] SR), the user-level read request above is refused. Similarly, if the access attributes that are associated with the L1D page with the destination buffer only allow supervisor read and write accesses (EDMA_TPCC_MPPAN_k[4] SW, EDMA_TPCC_MPPAN_k[5] SR), the user-level write request above is refused. For the transfer to succeed, the source and destination pages must have user-read and user-write permissions, respectively, along with allowing accesses from a PRIVID = 0.

Because the privilege level and privilege identification travel with the read and write requests, EDMA acts as a proxy.

Copyright © 2025 Texas Instruments Incorporated

Figure 10-19 illustrates the propagation of EDMA_TPCC_OPT_n[31] PRIV and EDMA_TPCC_OPT_n[27:24] PRIVID at the boundaries of all the interacting entities (CPU, EDMA_TPCC, EDMA_TPTCs, and slave memories).

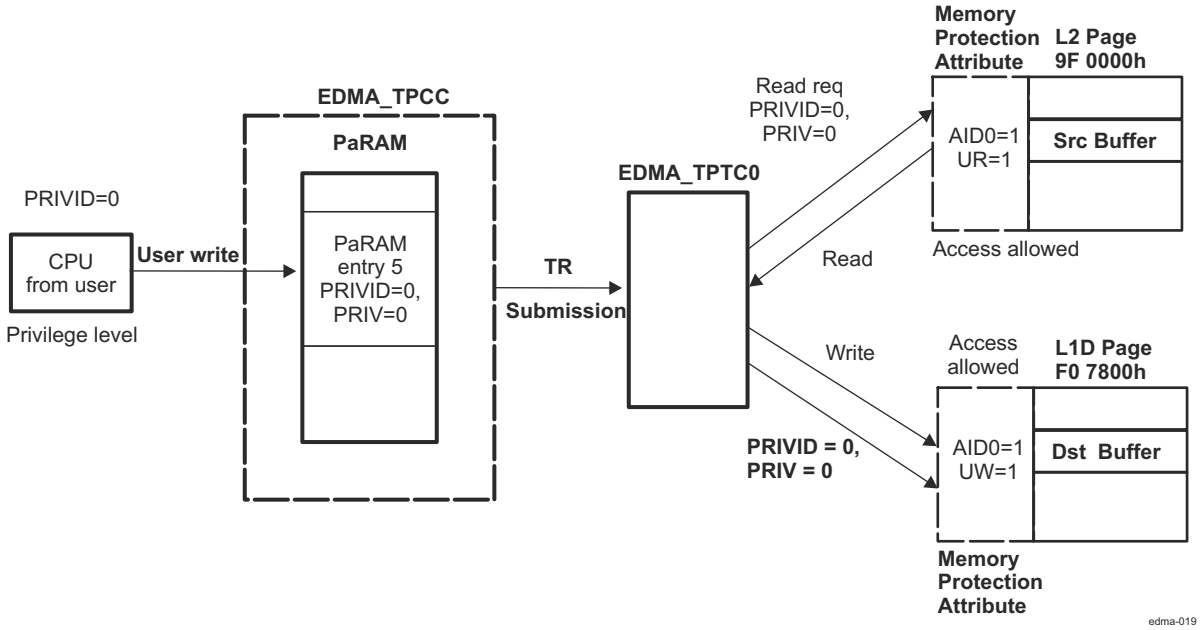

Figure 10-19. Proxy Memory Protection Example

10.1.3.11 Event Queue(s)

Event queues are a part of the EDMA channel controller. Event queues form the interface between the event detection logic in the EDMA_TPCC and the transfer request (TR) submission logic of the EDMA_TPCC. Each queue is 16 entries deep. Each event queue can queue a maximum of 16 events. If there are more than 16 events, then the events that cannot find a place in the event queue remain set in the associated event register and the CPU does not stall.

There are two event queues for the device: Queue0, Queue1. Events in Queue0 result in submission of its associated transfer requests (TRs) to TC0. The transfer requests that are associated with events in Queue1 are submitted to TC1.

An event that wins prioritization against other DMA and/or QDMA pending events is placed at the tail of the appropriate event queue. Each event queue is serviced in FIFO order. Once the event reaches the head of its queue and the corresponding transfer controller is ready to receive another TR, the event is de-queued and the PaRAM set corresponding to the de-queued event is processed and submitted as a transfer request packet (TRP) to the associated EDMA transfer controller.

Queue0 has highest priority and Queue1 has the lowest priority, if Queue0 and Queue1 both have at least one event entry and if both TC0 and TC1 can accept transfer requests, then the event in Queue0 is de-queued first and its associated PaRAM set is processed and submitted as a transfer request (TR) to TC0.

Refer to *Performance Considerations* for system-level performance considerations. All of the event entries in all of the event queues are software readable (not writeable) by accessing the event entry registers EDMA_TPCC_Q0E_p and EDMA_TPCC_Q1E_p. Each event entry register characterizes the queued event in terms of the type of event (manual, event, chained or auto-triggered) and the event number. Refer to the associated Register Addendum for EDMA_TPCC_Q0E_p / EDMA_TPCC_Q1E_p descriptions of the bit fields.

10.1.3.11.1 DMA/QDMA Channel to Event Queue Mapping

Each of the 64 DMA channels and eight QDMA channels are programmed independently to map to a specific queue, using the DMA queue number register EDMA_TPCC_DMAQNUMN_k and the QDMA queue number

Copyright © 2025 Texas Instruments Incorporated

register EDMA_TPCC_QDMAQNUM. The mapping of DMA/QDMA channels is critical to achieving the desired performance level for the EDMA and most importantly, in meeting real-time deadlines. Refer to *System-level Performance Considerations*.

Note

If an event is ready to be queued and both the event queue and the EDMA transfer controller that is associated to the event queue are empty, then the event bypasses the event queue, and moves the PaRAM processing logic, and eventually to the transfer request submission logic for submission to the EDMA_TPTC. In this case, the event is not logged in the event queue status registers.

10.1.3.11.2 Queue RAM Debug Visibility

There are two event queues and each queue has 16 entries. These 16 entries are managed in a circular FIFO. There is a queue status register EDMA_TPCC_QSTATN_i associated with each queue. These along with all of the 16 entries per queue can be read via registers EDMA_TPCC_QSTATN_i and Q0E_p / Q1E_p, respectively.

These registers provide user visibility.

The event queue entry register (Q*x*E*y* Q0E_p / Q1E_p) uniquely identifies the specific event type (event-triggered, manually-triggered, chain-triggered, and QDMA events) along with the event number (for all DMA/QDMA event channels) that are in the queue or have been de-queued (passed through the queue).

Each of the 16 entries in the event queue are read using the EDMA_TPCC memory-mapped register. To see the history of the last 16 TRs that have been processed by the EDMA on a given queue, read the event queue registers. This provides user/software visibility and is helpful for debugging real-time issues (typically post-mortem), involving multiple events and event sources.

The queue status register (QSTAT*n* EDMA_TPCC_QSTATN_i) includes fields for the start pointer EDMA_TPCC_QSTATN_i[3:0] STRTPTR which provides the offset to the head entry of an event. It also includes a field called EDMA_TPCC_QSTATN_i[12:8] NUMVAL that provides the total number of valid entries residing in the event queue at a given instance of time. The EDMA_TPCC_QSTATN_i[3:0] STRTPTR is used to index appropriately into the 16 event entries. EDMA_TPCC_QSTATN_i[12:8] NUMVAL number of entries starting from STRTPTR are indicative of events still queued in the respective queue. The remaining entry must be read to determine what's already de-queued and submitted to the associated transfer controller.

10.1.3.11.3 Queue Resource Tracking

The EDMA_TPCC event queue includes watermarking/threshold logic that allows to keep track of maximum usage of all event queues. This is useful for debugging real-time deadline violations that may result from head-of-line blocking on a given EDMA event queue.

The maximum number of events are programed that the queue up in an event queue by programming the threshold value (between 0 to 15) in the queue watermark threshold A register EDMA_TPCC_QWMTHRA. The maximum queue usage is recorded actively in the watermark EDMA_TPCC_QSTATN_i[20:16] WM field of the queue status register, that keeps getting updated based on a comparison of number of valid entries, which is also visible in the EDMA_TPCC_QSTATN_i[12:8] NUMVAL bit and the maximum number of entries.

If the queue usage is exceeded, this status is visible in the EDMA_TPCC registers: the QTHRXCD*n* bits in the channel controller error register EDMA_TPCC_CCERR[7:0] and the EDMA_TPCC_QSTATN_i[24] THRXCD bit, where *n* stands for the event queue number. Any bits that are set in EDMA_TPCC_CCERR also generate an EDMA_TPCC error interrupt.

10.1.3.11.4 Performance Considerations

The device system bus infrastructure arbitrates bus requests from all of the controllers (TCs, CPU(S), and other bus controllers) to the shared target resources (peripherals and memories).

Copyright © 2025 Texas Instruments Incorporated

The priorities of transfer requests (read and write commands) from the EDMA transfer controllers with respect to other controllers are programmed using the Control Module registers. The EDMA_TPCC_QUEPRI register has no affect.

Therefore, the priority of unloading queues has a secondary affect compared to the priority of the transfers as they are executed by the EDMA_TPTC.

10.1.3.12 EDMA Transfer Controller (EDMA_TPTC)

The EDMA channel controller is the user-interface of the EDMA and the EDMA transfer controller (EDMA_TPTC) is the data movement engine of the EDMA controller. The EDMA_TPCC submits transfer requests (TR) to the EDMA_TPTC and the EDMA_TPTC performs the data transfers dictated by the TR, so the EDMA_TPTC is a slave to the EDMA_TPCC.

10.1.3.12.1 Architecture Details

10.1.3.12.1.1 Command Fragmentation

The TC read and write controllers in conjunction with the source and destination register sets are responsible for issuing optimally-sized reads and writes to the target endpoints. An optimally-sized command is defined by the transfer controller default burst size (DBS), which is defined in the *TPTC DBS Configuration registers*.

The EDMA_TPTC attempts to issue the largest possible command size as limited by the DBS value or the EDMA_TPCC_ABCNT_n[15:0] ACNT and EDMA_TPCC_ABCNT_n[31:16] BCNT value of the TR. EDMA_TPTC obeys the following rules:

- The read/write controllers always issue commands less than or equal to the DBS value.
- The first command of a 1D transfer command always aligns the address of subsequent commands to the DBS value.

Table 10-24 lists the TR segmentation rules that are followed by the EDMA_TPTC. In summary, if the EDMA_TPCC_ABCNT_n[15:0] ACNT value is larger than the DBS value, then the EDMA_TPTC breaks the EDMA_TPCC_ABCNT_n[15:0] ACNT array into DBS-sized commands to the source/destination addresses. Each EDMA_TPCC_ABCNT_n[31:16] BCNT number of arrays are then serviced in succession.

For BCNT arrays of ACNT bytes (that is, a 2D transfer), if the EDMA_TPCC_ABCNT_n[15:0] ACNT value is less than or equal to the DBS value, then the TR may be optimized into a 1D-transfer in order to maximize efficiency. The optimization takes place if the EDMA_TPTC recognizes that the 2D-transfer is organized as a single dimension (EDMA_TPCC_ABCNT_n[15:0] ACNT == EDMA_TPCC_BIDX_n) and the ACNT value is a power of 2.

Table 10-24 lists conditions in which the optimizations are performed.

Table 10-24. Read/Write Command Optimization Rules

ACNT ≤ DBS	ACNT is power of 2	BIDX = ACNT	BCNT ≤ 1023	SAM/DAM = Increment	Description
Yes	Yes	Yes	Yes	Yes	Optimized
No	x	x	x	x	Not Optimized
x	No	x	x	x	Not Optimized
x	x	No	x	x	Not Optimized
x	x	x	No	x	Not Optimized
x	x	x	x	No	Not Optimized

10.1.3.12.1.2 TR Pipelining

TR pipelining refers to the ability of the source active set to proceed ahead of the destination active set. Essentially, the reads for a given TR may already be in progress while the writes of a previous TR may not have completed.

The number of outstanding TRs is limited by the number of destination FIFO register entries.

Copyright © 2025 Texas Instruments Incorporated

TR pipelining is useful for maintaining throughput on back-to-back small TRs. It minimizes the startup overhead because reads start in the background of a previous TR writes.

Copyright © 2025 Texas Instruments Incorporated

Example 10-4. Command Fragmentation (DBS = 64)

The pseudo code:

1. EDMA_TPTCn_PCNT[15:0] ACNT = 8, EDMA_TPTCn_PCNT[31:16] BCNT = 8, EDMA_TPTCn_PBIDX[15:0] SBIDX = 8, EDMA_TPTCn_PBIDX[31:16] DBIDX = 10, EDMA_TPTCn_PSRC[31:0] SADDR = 64, EDMA_TPTCn_SADST[31:0] DADDR = 191

   Read Controller: This is optimized from a 2D-transfer to a 1D-transfer such that the read side is equivalent to EDMA_TPTCn_PCNT[15:0] ACNT = 64, EDMA_TPTCn_PCNT[31:16] BCNT = 1.

   Cmd0 = 64 byte

   Write Controller: Because DBIDX != ACNT, it is not optimized.

   Cmd0 = 8 byte, Cmd1 = 8 byte, Cmd2 = 8 byte, Cmd3 = 8 byte, Cmd4 = 8 byte, Cmd5 = 8 byte, Cmd6 = 8 byte, Cmd7 = 8 byte.
2. EDMA_TPTCn_PCNT[15:0] ACNT=128, EDMA_TPTCn_PCNT[31:16] BCNT = 1, EDMA_TPTCn_PSRC[31:0] SADDR = 63, EDMA_TPTCn_SADST[31:0] DADDR = 513

   Read Controller: Read address is not aligned.

   Cmd0 = 1 byte, (now the SADDR is aligned to 64 for the next command)

   Cmd1 = 64 bytes

   Cmd2 = 63 bytes

   Write Controller: The write address is also not aligned.

   Cmd0 = 63 bytes, (now the DADDR is aligned to 64 for the next command)

   Cmd1 = 64 bytes

   Cmd2 = 1 byte

10.1.3.12.1.3 Performance Tuning

By default, reads are as issued as fast as possible. In some cases, the reads issued by the EDMA_TPTC could fill the available command buffering for a target, delaying other (potentially higher priority) controllers from successfully submitting commands to that target. The rate at which read commands are issued by the EDMA_TPTC is controlled by the EDMA_TPTCn_RDRATE register. The EDMA_TPTCn_RDRATE register defines the number of cycles that the EDMA_TPTC read controller waits before issuing subsequent commands for a given TR, thus minimizing the chance of the EDMA_TPTC consuming all available target resources. The EDMA_TPTCn_RDRATE[2:0] RDRATE value must be set to a relatively small value if the transfer controller is targeted for high priority transfers and to a higher value if the transfer controller is targeted for low priority transfers.

In contrast, the Write Interface does not have any performance turning knobs because writes always have an interval between commands as write commands are submitted along with the associated write data.

10.1.3.12.2 Memory Protection

The transfer controller plays an important role in handling proxy memory protection. There are two access properties associated with a transfer: for instance, the privilege id (system-wide identification assigned to a controller) of the controller initiating the transfer, and the privilege level (user versus supervisor) used to program the transfer. This information is maintained in the PaRAM set when it is programmed in the channel controller. When a TR is submitted to the transfer controller, this information is made available to the EDMA_TPTC and used by the EDMA_TPTC while issuing read and write commands. The read or write commands have the same privilege identification, and privilege level as that programmed in the EDMA transfer in the channel controller.

Copyright © 2025 Texas Instruments Incorporated

10.1.3.12.3 Error Generation

Errors are generated if enabled under three conditions:

- EDMA_TPTC detection of an error signaled by the source or destination address.
- Attempt to read or write to an invalid address in the configuration memory map.
- Detection of a constant addressing mode TR violating the constant addressing mode transfer rules (the source/destination addresses and source/destination indexes must be aligned to 32 bytes).

Either or all error types may be disabled. If an error bit is set and enabled, the error interrupt for the concerned transfer controller is generated.

10.1.3.12.4 Debug Features

The DMA program register set, DMA source active register set, and the destination FIFO register set are used to derive a brief history of TRs serviced through the transfer controller.

Additionally, the EDMA_TPTC status register EDMA_TPTCn_TCSTAT has dedicated bit fields to indicate the ongoing activity within different parts of the transfer controller:

- The EDMA_TPTCn_TCSTAT[1] SRCACTV bit indicates whether the source active set is active.
- The EDMA_TPTCn_TCSTAT[6:4] DSTACTV bit indicates the number of TRs resident in the destination register active set at a given instance.
- The EDMA_TPTCn_TCSTAT[0] PROGBUSY bit indicates whether a valid TR is present in the DMA program set.

Note

If the TRs are in progression, it must realize that there is a chance that the values read from the EDMA_TPTC status registers will be inconsistent since the EDMA_TPTC changes the values of these registers due to ongoing activities.

It is recommended that to ensure no additional submission of TRs to the EDMA_TPTC in order to facilitate ease of debug.

10.1.3.12.4.1 Destination FIFO Register Pointer

The destination FIFO register pointer is implemented as a circular buffer with the start pointer being EDMA_TPTCn_TCSTAT[12:11] DFSTRTPTR and a buffer depth of usually 2 or 4. The EDMA_TPTC maintains two important status details in EDMA_TPTCn_TCSTAT that are used during advanced debugging, if necessary. The EDMA_TPTCn_TCSTAT[12:11] DFSTRTPTR is a start pointer, the index to the head of the destination FIFO register. The EDMA_TPTCn_TCSTAT[6:4] DSTACTV is a counter for the number of valid (occupied) entries. These registers are used to get a brief history of transfers.

Examples of some register field values and their interpretation:

- EDMA_TPTCn_TCSTAT[12:11] DFSTRTPTR = 0x0 and EDMA_TPTCn_TCSTAT[6:4] DSTACTV = 0x0 implies that no TRs are stored in the destination FIFO register.
- EDMA_TPTCn_TCSTAT[12:11] DFSTRTPTR = 0x1 and EDMA_TPTCn_TCSTAT[6:4] DSTACTV = 0x2 implies that two TRs are present. The first pending TR is read from the destination FIFO register entry 1 and the second pending TR is read from the destination FIFO register entry 2.
- EDMA_TPTCn_TCSTAT[12:11] DFSTRTPTR = 0x3 and EDMA_TPTCn_TCSTAT[6:4] DSTACTV = 0x2 implies that two TRs are present. The first pending TR is read from the destination FIFO register entry 3 and the second pending TR is read from the destination FIFO register entry 0.

10.1.3.13 Event Dataflow

This section summarizes the data flow of a single event, from the time the event is latched to the channel controller to the time the transfer completion code is returned. The following steps list the sequence of EDMA_TPCC activity:

1. Event is asserted from an external source (peripheral or external interrupt). This also is similar for a manually-triggered, chained-triggered, or QDMA-triggered event. The event is latched

Copyright © 2025 Texas Instruments Incorporated

into the EDMA_TPCC_ER[31:0]E*n* / EDMA_TPCC_ERH[31:0] E*n* (or EDMA_TPCC_CER[31:0] E*n* / EDMA_TPCC_CERH[31:0] E*n*, EDMA_TPCC_ESR[31:0] E*n* / EDMA_TPCC_ESRH[31:0] E*n*, EDMA_TPCC_QER[7:0] E*n*) bit.

2. Once an event is prioritized and queued into the appropriate event queue, the EDMA_TPCC_SER[31:0] E*n* \ EDMA_TPCC_SERH[31:0] E*n* (or EDMA_TPCC_QSER[7:0] E*n*) bit is set to inform the event prioritization / processing logic to disregard this event since it is already in the queue. Alternatively, if the transfer controller and the event queue are empty, then the event bypasses the queue.
3. The EDMA_TPCC processing and the submission logic evaluates the appropriate PaRAM set and determines whether it is a non-null and non-dummy transfer request (TR).
4. The EDMA_TPCC clears the EDMA_TPCC_ER[31:0] E*n*/ EDMA_TPCC_ERH[31:0] E*n* (or EDMA_TPCC_CER[31:0] E*n* / EDMA_TPCC_CERH[31:0] E*n*, EDMA_TPCC_ESR[31:0]E*n* / EDMA_TPCC_ESRH[31:0] E*n*, EDMA_TPCC_QER[31:0] E*n*) bit and the EDMA_TPCC_SER[31:0] E*n*/ EDMA_TPCC_SERH[31:0] E*n* bit as soon as it determines the TR is non-null. In the case of a null set, the EDMA_TPCC_SER[31:0] E*n*/ EDMA_TPCC_SERH[31:0] E*n* bit remains set. It submits the non-null/non-dummy TR to the associated transfer controller. If the TR was programmed for early completion, the EDMA_TPCC immediately sets the interrupt pending register (EDMA_TPCC_IPR[31:0] I[TCC] / EDMA_TPCC_IPRH[31:0] I[TCC] - 32).
5. If the TR was programmed for normal completion, the EDMA_TPCC sets the interrupt pending register (EDMA_TPCC_IPR[31:0] I[TCC] / EDMA_TPCC_IPRH[31:0] I[TCC]) when the EDMA_TPTC informs the EDMA_TPCC about completion of the transfer (returns transfer completion codes).
6. The EDMA_TPCC programs the associated EDMA_TPTC's Program Register Set with the TR.
7. The TR is then passed to the Source Active set and the DST FIFO Register Set, if both the register sets are available.
8. The Read Controller processes the TR by issuing read commands to the source slave endpoint. The Read Data lands in the Data FIFO of the EDMA_TPTC*n*.
9. As soon as sufficient data is available, the Write Controller begins processing the TR by issuing write commands to the destination slave endpoint.
10. This continues until the TR completes and the EDMA_TPTC*n* then signals completion status to the EDMA_TPCC.

10.1.3.14 EDMA Controller Prioritization

The EDMA controller has many implementation rules to deal with concurrent events/channels, transfers, etc. The following subsections detail various arbitration details whenever there might be occurrence of concurrent activity. Figure 10-20 shows the different places EDMA priorities come into play.

Copyright © 2025 Texas Instruments Incorporated

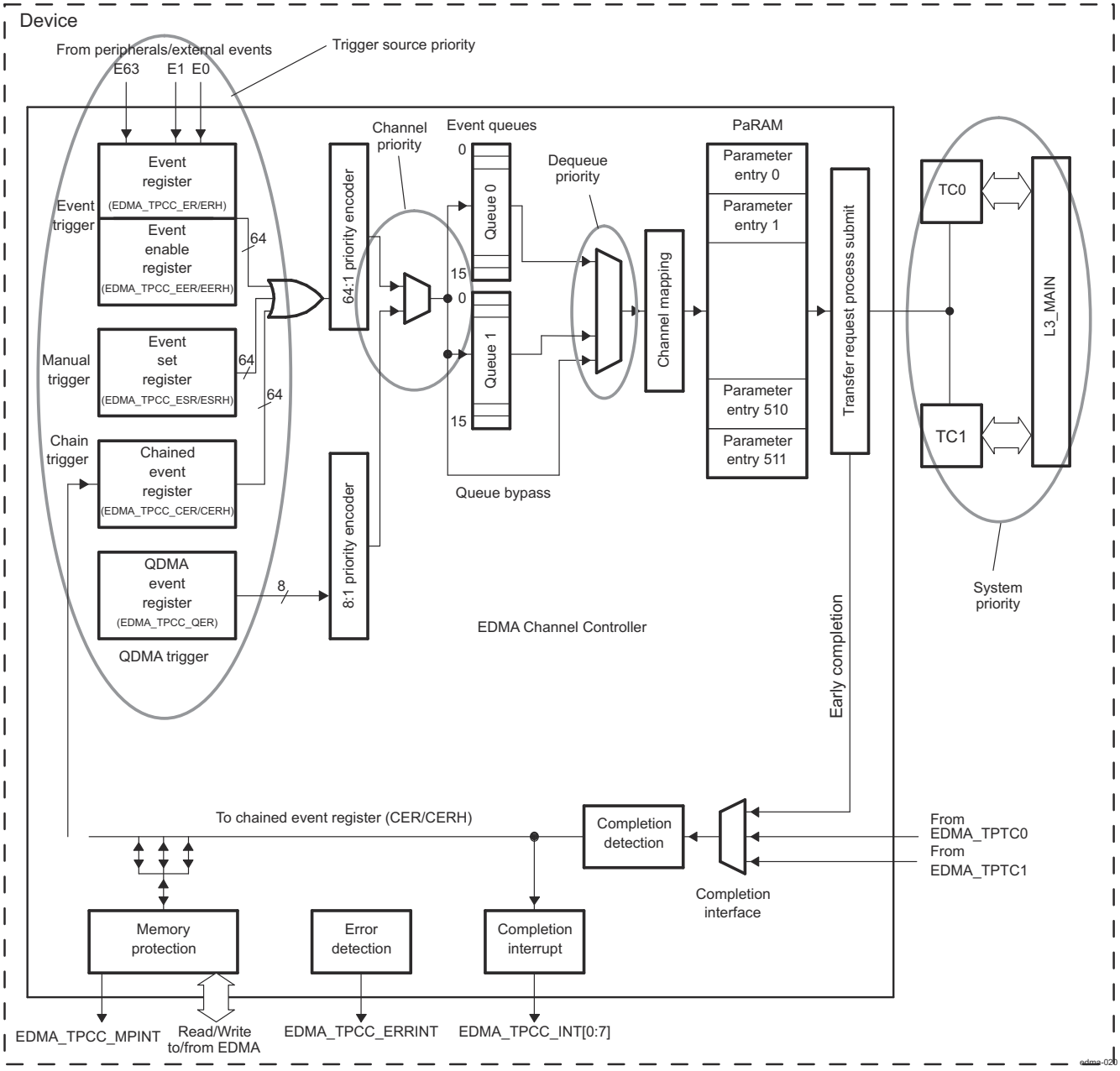

Figure 10-20. EDMA Prioritization

10.1.3.14.1 Channel Priority

The EDMA event registers EDMA_TPCC_ER and EDMA_TPCC_ERH capture up to 64 events, the QDMA event register EDMA_TPCC_QER captures QDMA events for all QDMA channels therefore, it is possible for events to occur simultaneously on the DMA/QDMA event inputs. For events arriving simultaneously, the event associated with the lowest channel number is prioritized for submission to the event queues (for DMA events, channel 0 has the highest priority and channel 63 has the lowest priority, for QDMA events, channel 0 has the highest priority and channel 7 has the lowest priority). This mechanism only sorts simultaneous events for submission to the event queues.

If a DMA and QDMA event occurs simultaneously, the DMA event always has prioritization against the QDMA event for submission to the event queues.

Copyright © 2025 Texas Instruments Incorporated

10.1.3.14.2 Trigger Source Priority

If a EDMA channel is associated with more than one trigger source (event trigger, manual trigger, and chain trigger), and if multiple events are set simultaneously for the same channel (EDMA_TPCC_ER[31:0] E*n* = 1, EDMA_TPCC_ESR[31:0] E*n* = 1 , EDMA_TPCC_CER[31:0] E*n* = 1) , then the EDMA_TPCC always services these events in the following priority order: event trigger (via EDMA_TPCC_ER) is higher priority than chain trigger (via EDMA_TPCC_CER) and chain trigger is higher priority than manual trigger (via EDMA_TPCC_ESR).

This implies that if for channel 0, both EDMA_TPCC_ER[0] E0 = 1 and EDMA_TPCC_CER[0] E0 = 1 at the same time, then the EDMA_TPCC_ER[0] E0 event is always queued before the EDMA_TPCC_CER[0] E0 event.

10.1.3.14.3 Dequeue Priority

The priority of the associated transfer request (TR) is further mitigated by which event queue is being used for event submission (dictated by EDMA_TPCC_DMAQNUMN_k and EDMA_TPCC_QDMAQNUM). For submission of a TR to the transfer request, events need to be de-queued from the event queues. Queue 0 has the highest dequeue priority and queue 1 the lowest.

10.1.3.15 Emulation Considerations

During debug when using the emulator, the CPU(s) may be halted on an execute packet boundary for single-stepping, benchmarking, profiling, or other debug purposes. During an emulation halt, the EDMA channel controller and transfer controller operations continue. Events continue to be latched and processed and transfer requests continue to be submitted and serviced.

Since EDMA is involved in servicing multiple controller and target peripherals, it is not feasible to have an independent behavior of the EDMA for emulation halts. EDMA functionality would be coupled with the peripherals it is servicing, which might have different behavior during emulation halts.

Copyright © 2025 Texas Instruments Incorporated

10.1.4 EDMA Transfer Examples

The EDMA channel controller performs a variety of transfers depending on the parameter configuration. The following sections provide a description and PaRAM configuration for some typical use case scenarios.

10.1.4.1 Block Move Example

The most basic transfer performed by the EDMA is a block move. During device operation it is often necessary to transfer a block of data from one location to another, usually between on-chip and off-chip memory.

In this example, a section of data is to be copied from external memory to internal L2 SRAM as shown in Figure 10-21.

The source address for the transfer is set to the start of the data block in external memory, and the destination address is set to the start of the data block in L2. If the data block is less than 64K bytes, the PaRAM configuration shown in Figure 10-22 holds true with the synchronization type set to A-synchronized and indexes cleared to 0. If the amount of data is greater than or equal to 64K bytes, EDMA_TPCC_ABCNT_n[31:16] BCNT and the B-indexes need to be set appropriately with the synchronization type set to AB-synchronized. The EDMA_TPCC_OPT_n[3] STATIC bit is set to prevent linking.

This transfer example may also be set up using QDMA. For successive transfer submissions, of a similar nature, the number of cycles used to submit the transfer are fewer depending on the number of changing transfer parameters. The QDMA trigger word must be programed to be the highest numbered offset in the PaRAM set that undergoes change.

Figure 10-22 shows the parameters Block Move transfer.

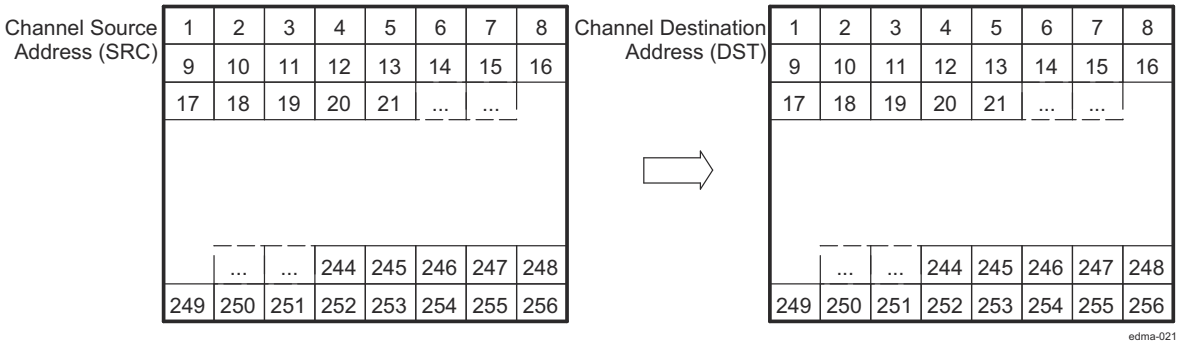

Figure 10-21. Block Move Example

Copyright © 2025 Texas Instruments Incorporated

Figure 10-22. Block Move Example PaRAM Configuration

(a) EDMA Parameters

Parameter Contents		Parameter	
0010 0008h		Channel Options Parameter (OPT)	
Channel Source Address (SRC)		Channel Source Address (SRC)	
0001h	FFFFh	Count for 2nd Dimension (BCNT)	Count for 1st Dimension (ACNT)
Channel Destination Address (DST)		Channel Destination Address (DST)	
0000h	0000h	Destination BCNT Index (DBIDX)	Source BCNT Index (SBIDX)
0000h	FFFFh	BCNT Reload (BCNTRLD)	Link Address (LINK)
0000h	0000h	Destination CCNT Index (DCIDX)	Source CCNT Index (SCIDX)
0000h	0001h	Reserved	Count for 3rd Dimension (CCNT)

(b)Channel Options Parameter (OPT) Content

- EDMA_TPCC_OPT_n[3] STATIC = 0x1
- EDMA_TPCC_OPT_n[20] TCINTEN = 0x1

Copyright © 2025 Texas Instruments Incorporated

10.1.4.2 Subframe Extraction Example

The EDMA can efficiently extract a small frame of data from a larger frame of data. By performing a 2D-to-1D transfer, the EDMA retrieves a portion of data for the CPU to process. In this example, a 640 × 480-pixel frame of video data is stored in external memory. Each pixel is represented by a 16-bit halfword. The CPU extracts a 16 × 12-pixel subframe of the image for processing. To facilitate more efficient processing time by the CPU, the EDMA places the subframe in internal L2 SRAM. Figure 10-23 shows the transfer of a subframe from external memory to L2.

The same PaRAM entry options are used for QDMA channels, as well as DMA channels. The EDMA_TPCC_OPT_n[3] STATIC bit is set to prevent linking. For successive transfers, only changed parameters need to be programmed before triggering the channel.

Figure 10-24 shows the parameters for Subframe Extraction transfer.

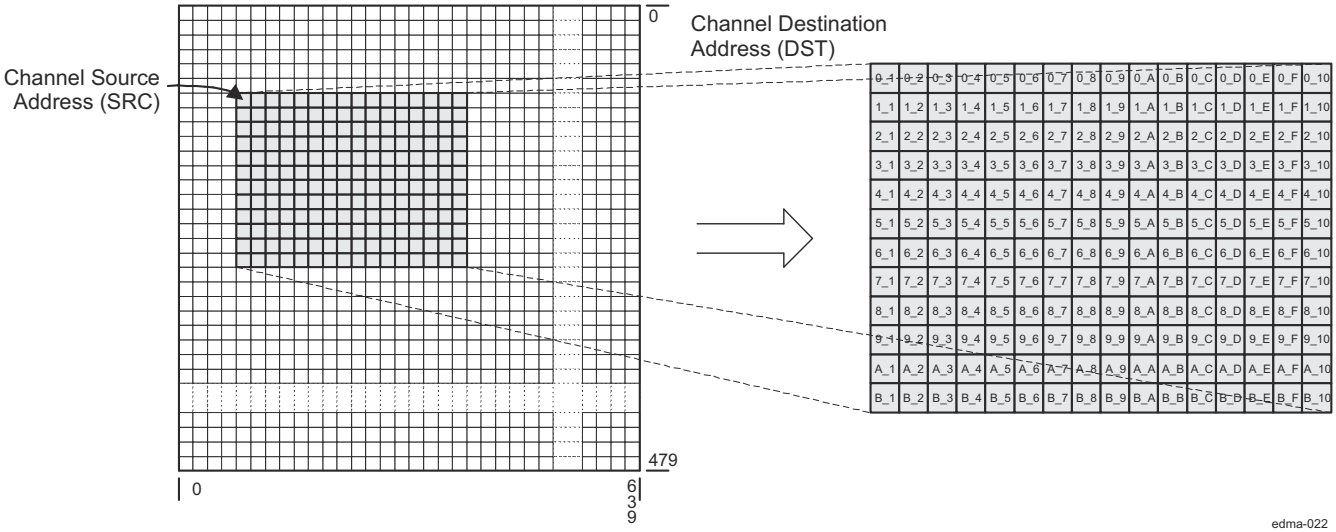

Figure 10-23. Subframe Extraction Transfer

Figure 10-24. Subframe Extraction Example PaRAM Configuration

(a) EDMA Parameters

Parameter Contents			Parameter	
0010 000Ch			Channel Options Parameter (OPT)	
Channel Source Address (SRC)			Channel Source Address (SRC)	
000Ch	0020h		Count for 2nd Dimension (BCNT)	Count for 1st Dimension (ACNT)
Channel Destination Address (DST)			Channel Destination Address (DST)	
0020h	0500h		Destination BCNT Index (DBIDX)	Source BCNT Index (SBIDX)
0000h	FFFFh		BCNT Reload (BCNTRLD)	Link Address (LINK)
0000h	0000h		Destination CCNT Index (DCIDX)	Source CCNT Index (SCIDX)
0000h	0001h		Reserved	Count for 3rd Dimension (CCNT)

(b) Channel Options Parameter (OPT) Content

- EDMA_TPCC_OPT_n[2] SYNCDIM = 0x1
- EDMA_TPCC_OPT_n[3] STATIC = 0x1
- EDMA_TPCC_OPT_n[20] TCINTEN = 0x1

Copyright © 2025 Texas Instruments Incorporated

10.1.4.3 Data Sorting Example

Many applications require the use of multiple data arrays, it is often desirable to have the arrays arranged such that the first elements of each array are adjacent, the second elements are adjacent, and so on. Often this is not how the data is presented to the device. Either data is transferred via a peripheral with the data arrays arriving one after the other or the arrays are located in memory with each array occupying a portion of contiguous memory spaces. For these instances, the EDMA can reorganize the data into the desired format.

To determine the parameter set values, the following need to be considered:

- ACNT - Program this to be the size in bytes of an element.
- BCNT - Program this to be the number of elements in a frame.
- CCNT - Program this to be the number of frames.
- SBIDX - Program this to be the size of the element or ACNT.
- DBIDX - CCNT × ACNT
- SCIDX - ACNT × BCNT
- DCIDX - ACNT

The synchronization type needs to be AB-synchronized and the EDMA_TPCC_OPT_n[3] STATIC bit is 0 to allow updates to the parameter set. It is advised to use normal EDMA channels for sorting.

It is not possible to sort this with a single trigger event. Instead, the channel can be programmed to be chained to itself. After BCNT elements get sorted, intermediate chaining could be used to trigger the channel again causing the transfer of the next BCNT elements and so on. Figure 10-26 shows the parameter set programming for this transfer, assuming channel 0 and an element size of 4 bytes.

Figure 10-25 shows the Data Sorting transfer

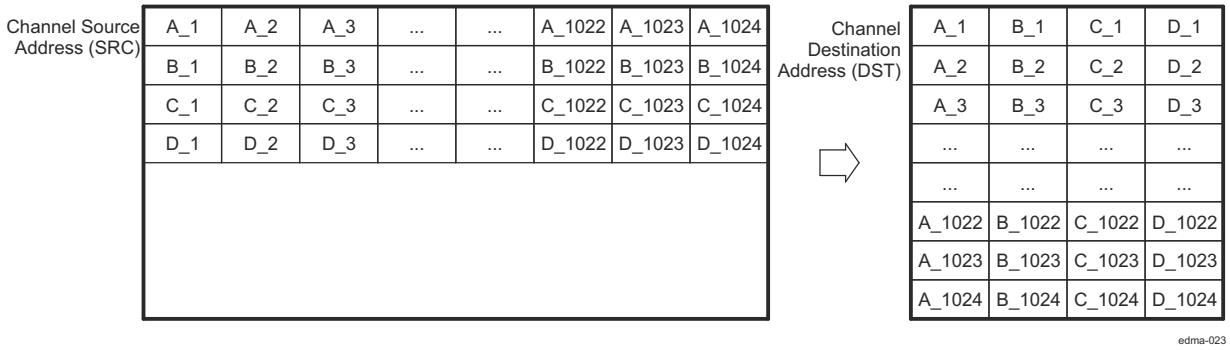

Figure 10-25. Data Sorting Example

Copyright © 2025 Texas Instruments Incorporated

Figure 10-26. Data Sorting Example PaRAM Configuration

(a) EDMA Parameters

Parameter Contents		Parameter	
0090 0004h		Channel Options Parameter (OPT)	
Channel Source Address (SRC)		Channel Source Address (SRC)	
0400h	0004h	Count for 2nd Dimension (BCNT)	Count for 1st Dimension (ACNT)
Channel Destination Address (DST)		Channel Destination Address (DST)	
0010h	0001h	Destination BCNT Index (DSTBIDX)	Source BCNT Index (SRCBIDX)
0000h	FFFFh	BCNT Reload (BCNTRLD)	Link Address (LINK)
0001h	1000h	Destination CCNT Index (DSTCIDX)	Source CCNT Index (SRCCIDX)
0000h	0004h	Reserved	Count for 3rd Dimension (CCNT)

(b) Channel Options Parameter (OPT) Content

- EDMA_TPCC_OPT_n[2] SYNCDIM = 0x1
- EDMA_TPCC_OPT_n[20] TCINTEN = 0x1
- EDMA_TPCC_OPT_n[23] ITCCHEN = 0x1

Copyright © 2025 Texas Instruments Incorporated

10.1.4.4 Setting Up an EDMA Transfer

The following list provides a quick guide for the typical steps involved in setting up a transfer.

1. Initiating a DMA/QDMA channel
   a. Determine the type of channel (QDMA or DMA) to be used.
   b. Channel mapping
      i. If using a QDMA channel, program the EDMA_TPCC_QCHMAPN_j with the parameter set number to which the channel maps and the trigger word.
      ii. If using a DMA channel, program the EDMA_TPCC_DCHMAPN_m with the parameter set number to which the channel maps.
   c. If the channel is being used in the context of a shadow region, ensure the EDMA_TPCC_DRAEM_k / EDMA_TPCC_DRAEHM_k for the region is properly set up to allow read write accesses to bits in the event registers and interrupt registers in the Shadow region memory map. The subsequent steps in this process should be done using the respective shadow region registers. (Shadow region descriptions and usage are provided in Section 10.1.3.7.1.)
   d. Determine the type of triggering used.
      i. If external events are used for triggering (DMA channels), enable the respective event in EDMA_TPCC_EER / EDMA_TPCC_EERH by writing into EDMA_TPCC_EESR / EDMA_TPCC_EESRH.
      ii. If QDMA Channel is used, enable the channel in EDMA_TPCC_QEER by writing into EDMA_TPCC_QEESR.
   e. Queue setup
      i. If a QDMA channel is used, set up the EDMA_TPCC_QDMAQNUM to map the channel to the respective event queue.
      ii. If a DMA channel is used, set up the EDMA_TPCC_DMAQNUMN_k to map the event to the respective event queue.

2. Parameter set setup
   a. Program the PaRAM set number associated with the channel. Note that

Note

If it is a QDMA channel, the PaRAM entry that is configured as trigger word is written to last. Alternatively, enable the QDMA channel (step 1-d-ii above) just before the write to the trigger word.

3. Interrupt setup
   a. Enable the interrupt in the EDMA_TPCC_IER / EDMA_TPCC_IERH by writing into EDMA_TPCC_IESR / EDMA_TPCC_IESRH.
   b. Ensure the EDMA_TPCC completion interrupt (this refers to either the Global interrupt or the shadow region interrupt) is enabled properly in the Device Interrupt controller.
   c. Set up the interrupt controller properly to receive the expected EDMA interrupt.
4. Initiate transfer
   a. This step is highly dependent on the event trigger source:
      i. If the source is an external event coming from a peripheral, the peripheral will be enabled to start generating relevant EDMA events that can be latched to the EDMA_TPCC_ER transfer.
      ii. For QDMA events, writes to the trigger word (step 2-a above) will initiate the transfer.
      iii. Manually triggered transfers will be initiated by writes to the Event Set Registers EDMA_TPCC_ESR / EDMA_TPCC_ESRH.
      iv. Chained-trigger events initiate when a previous transfer returns a transfer completion code equal to the chained channel number.

5. Wait for completion

Copyright © 2025 Texas Instruments Incorporated

a. If the interrupts are enabled as mentioned in step 3 above, then the EDMA_TPCC will generate a completion interrupt to the CPU whenever transfer completion results in setting the corresponding bits in the interrupt pending register EDMA_TPCC_IPR / EDMA_TPCC_IPRH. The set bits must be cleared in the EDMA_TPCC_IPR / EDMA_TPCC_IPRH by writing to corresponding bit in EDMA_TPCC_ICR / EDMA_TPCC_ICRH.
b. If polling for completion (interrupts not enabled in the device controller), then the application code can wait on the expected bits to be set in the EDMA_TPCC_IPR / EDMA_TPCC_IPRH. Again, the set bits in the EDMA_TPCC_IPR / EDMA_TPCC_IPRH must be manually cleared via EDMA_TPCC_ICR / EDMA_TPCC_ICRH before the next set of transfers is performed for the same transfer completion code values.

10.1.5 EDMA Event Map

10.1.5.1 MSS TPCC_A Event Map

Table 10-25. MSS TPCC_A Event Map

TPCC Event	Define Name	Description
0	MSS_SPIA_DMA_REQ0	MSS SPIA DMA Request 0
1	MSS_SPIA_DMA_REQ1	MSS SPIA DMA Request 1
2	MSS_SPIA_DMA_REQ2	MSS SPIA DMA Request 2
3	MSS_SPIA_DMA_REQ3	MSS SPIA DMA Request 3
4	MSS_SPIA_DMA_REQ4	MSS SPIA DMA Request 4
5	MSS_SPIA_DMA_REQ5	MSS SPIA DMA Request 5
6	MSS_SPIB_DMA_REQ0	MSS SPIB DMA Request 0
7	MSS_SPIB_DMA_REQ1	MSS SPIB DMA Request 1
8	MSS_SPIB_DMA_REQ2	MSS SPIB DMA Request 2
9	MSS_SPIB_DMA_REQ3	MSS SPIB DMA Request 3
10	MSS_SPIB_DMA_REQ4	MSS SPIB DMA Request 4
11	MSS_SPIB_DMA_REQ5	MSS SPIB DMA Request 5
12	MSS_QSPI_DMA_REQ0	MSS QSPI DMA Request 0
13	MSS_MCRC_DMA_REQ0	MSS MCRC DMA Request 0
14	MSS_MCRC_DMA_REQ0	MSS MCRC DMA Request 1
15	MSS_RTIA_DMA_REQ0	MSS RTIA DMA Request 0
16	MSS_RTIA_DMA_REQ1	MSS RTIA DMA Request 1
17	MSS_RTIA_DMA_REQ2	MSS RTIA DMA Request 2
18	MSS_RTIA_DMA_REQ3	MSS RTIA DMA Request 3
19	MSS_RTIB_DMA_REQ0	MSS RTIB DMA Request 0
20	MSS_RTIB_DMA_REQ1	MSS RTIB DMA Request 1
21	MSS_RTIC_DMA_REQ0	MSS RTIC DMA Request 0
22	MSS_RTIC_DMA_REQ1	MSS RTIC DMA Request 1
23	MSS_WDT_DMA_REQ0	MSS WDT DMA Request 0
24	MSS_WDT_DMA_REQ1	MSS WDT DMA Request 1
25	MSS_WDT_DMA_REQ2	MSS WDT DMA Request 2
26	MSS_WDT_DMA_REQ3	MSS WDT DMA Request 3
27	MSS_ETPWMA_DMA_REQ0	MSS_ETPWMA DMA Req directly taken from IO
28	MSS_ETPWMA_DMA_REQ1	MSS_ETPWMA DMA Req directly taken from IO
29	MSS_ETPWMB_DMA_REQ0	MSS_ETPWMB DMA Req directly taken from IO
30	MSS_ETPWMB_DMA_REQ1	MSS_ETPWMB DMA Req directly taken from IO
31	MSS_ETPWMC_DMA_REQ0	MSS_ETPWMC DMA Req directly taken from IO
32	MSS_ETPWMC_DMA_REQ1	MSS_ETPWMC DMA Req directly taken from IO

Copyright © 2025 Texas Instruments Incorporated

Table 10-25. MSS TPCC_A Event Map (continued)

TPCC Event	Define Name	Description
33	MSS_MCANA_DMA_REQ0	MSS_MCANA DMA Request 0
34	MSS_MCANA_DMA_REQ1	MSS_MCANA DMA Request 1
35	MSS_MCANA_FE_INT1	MSS_MCANA filter event 1
36	MSS_MCANA_FE_INT2	MSS_MCANA filter event 2
37	MSS_MCANA_FE_INT4	MSS_MCANA filter event 4
38	MSS_MCANB_DMA_REQ0	MSS_MCANB DMA Request 0
39	MSS_MCANB_DMA_REQ1	MSS_MCANB DMA Request 1
40	MSS_MCANB_FE_INT1	MSS_MCANB filter event 1
41	MSS_MCANB_FE_INT2	MSS_MCANB filter event 2
42	MSS_MCANB_FE_INT4	MSS_MCANB filter event 4
43	MSS_RTIB_DMA_REQ2	MSS RTIB DMA Request 2
44	MSS_RTIB_DMA_REQ3	MSS RTIB DMA Request 3
45	MSS_RTIC_DMA_REQ2	MSS RTIC DMA Request 2
46	MSS_RTIC_DMA_REQ3	MSS RTIC DMA Request 3
47	Reserved	Reserved
48	Reserved	Reserved
49	MSS_GIO_PAD_INT0	Interrupt Triger from GIO[0][0]
50	MSS_GIO_PAD_INT1	Interrupt Triger from GIO[0][1]
51	MSS_GIO_PAD_INT2	Interrupt Triger from GIO[0][2]
52	MSS_GIO_PAD_INT3	Interrupt Triger from GIO[0][3]
53	MSS_GIO_PAD_INT4	Interrupt Triger from GIO[1][0]
54	Reserved	Reserved
55	MSS_I2C_DMA_REQ 0	MSS_I2C DMA Request 0
56	MSS_I2C_DMA_REQ 1	MSS_I2C DMA Request 1
57	MSS_SCIA_RX_DMA_REQ	MSS SCIA RX DMA Request
58	MSS_SCIA_TX_DMA_REQ	MSS SCIA TX DMA Request
59	MSS_SCIB_RX_DMA_REQ	MSS SCIB RX DMA Request
60	MSS_SCIB_TX_DMA_REQ	MSS SCIB TX DMA Request
61	Reserved	Reserved
62	Reserved	Reserved
63	CBUFF_DMA_REQ	Trigger from CBUFF

10.1.5.2 MSS TPCC_B Event Map

Table 10-26. MSS TPCC_B Event Map

TPCC Event	Define Name	Description
0	MSS_MCRC_DMA_REQ0	MSS MCRC DMA Request 0
1	MSS_MCRC_DMA_REQ1	MSS MCRC DMA Request 1
2	MSS_ETPWMA_DMA_REQ0	MSS_ETPWMA DMA Req directly taken from IO
3	MSS_ETPWMA_DMA_REQ1	MSS_ETPWMA DMA Req directly taken from IO
4	MSS_ETPWMB_DMA_REQ0	MSS_ETPWMB DMA Req directly taken from IO
5	MSS_ETPWMB_DMA_REQ1	MSS_ETPWMB DMA Req directly taken from IO
6	MSS_ETPWMC_DMA_REQ0	MSS_ETPWMC DMA Req directly taken from IO
7	MSS_ETPWMC_DMA_REQ1	MSS_ETPWMC DMA Req directly taken from IO
8	MSS_MCANA_DMA_REQ0	MSS_MCANA DMA Request 0
9	MSS_MCANA_DMA_REQ1	MSS_MCANA DMA Request 1

Copyright © 2025 Texas Instruments Incorporated

Table 10-26. MSS TPCC_B Event Map (continued)

TPCC Event	Define Name	Description
10	MSS_MCANB_DMA_REQ0	MSS_MCANB DMA Request 0
11	MSS_MCANB_DMA_REQ1	MSS_MCANB DMA Request 1
12	Reserved	Reserved
13	Reserved	Reserved
14	Reserved	Reserved
15	Reserved	Reserved
16	MSS_GIO_PAD_INT0	Interrupt Triger from GIO[0][0]
17	MSS_GIO_PAD_INT1	Interrupt Triger from GIO[0][1]
18	MSS_GIO_PAD_INT2	Interrupt Triger from GIO[0][2]
19	MSS_GIO_PAD_INT3	Interrupt Triger from GIO[0][3]
20	MSS_GIO_PAD_INT4	Interrupt Triger from GIO[1][0]
21	Reserved	Reserved
22	Reserved	Reserved
23	Reserved	Reserved
24	Reserved	Reserved
25	Reserved	Reserved
26	DTHE_SHA_DMA_REQ0	DMA request 1 from SHA
27	DTHE_SHA_DMA_REQ1	DMA request 2 from SHA
28	DTHE_SHA_DMA_REQ2	DMA request 3 from SHA
29	DTHE_SHA_DMA_REQ3	DMA request 4 from SHA
30	DTHE_SHA_DMA_REQ4	DMA request 5 from SHA
31	DTHE_SHA_DMA_REQ5	DMA request 6 from SHA
32	DTHE_AES_DMA_REQ0	DMA request 1 from AES
33	DTHE_AES_DMA_REQ1	DMA request 2 from AES
34	DTHE_AES_DMA_REQ2	DMA request 3 from AES
35	DTHE_AES_DMA_REQ3	DMA request 4 from AES
36	DTHE_AES_DMA_REQ4	DMA request 5 from AES
37	DTHE_AES_DMA_REQ5	DMA request 6 from AES
38	DTHE_AES_DMA_REQ6	DMA request 7 from AES
39	DTHE_AES_DMA_REQ7	DMA request 8 from AES
40	Reserved	Reserved
41	Reserved	Reserved
42	Reserved	Reserved
43	MSS_MCANB_FE_INT1	Filter event 1 from MSS_MCANA
44	MSS_MCANB_FE_INT2	Filter event 2 from MSS_MCANA
45	MSS_MCANB_FE_INT3	Filter event 3 from MSS_MCANA
46	MSS_MCANB_FE_INT4	Filter event 4 from MSS_MCANA
47	MSS_MCANB_FE_INT5	Filter event 5 from MSS_MCANA
48	MSS_MCANB_FE_INT6	Filter event 6 from MSS_MCANA
49	MSS_MCANB_FE_INT7	Filter event 7 from MSS_MCANA
50	MSS_MCANB_FE_INT1	Filter event 1 from MSS_MCANB
51	MSS_MCANB_FE_INT2	Filter event 2 from MSS_MCANB
52	MSS_MCANB_FE_INT3	Filter event 3 from MSS_MCANB

Copyright © 2025 Texas Instruments Incorporated

Table 10-26. MSS TPCC_B Event Map (continued)

TPCC Event	Define Name	Description
53	MSS_MCANB_FE_INT4	Filter event 4 from MSS_MCANB
54	MSS_MCANB_FE_INT5	Filter event 5 from MSS_MCANB
55	MSS_MCANB_FE_INT6	Filter event 6 from MSS_MCANB
56	MSS_MCANB_FE_INT7	Filter event 7 from MSS_MCANB
57	Reserved	Reserved
58	Reserved	Reserved
59	Reserved	Reserved
60	Reserved	Reserved
61	Reserved	Reserved
62	Reserved	Reserved
63	Reserved	Reserved

10.1.5.3 DSS TPCC_A/TPCC_B/TPCC_C Event Map

Table 10-27. DSS TPCC_A Event Map

TPCC Event	Define Name	Decscription
0	DSS_RTIA_DMA_REQ0	DSS RTIA DMA Request 0
1	DSS_RTIA_DMA_REQ1	DSS RTIA DMA Request 1
2	DSS_RTIA_DMA_REQ2	DSS RTIA DMA Request 2
3	DSS_RTIA_DMA_REQ3	DSS RTIA DMA Request 3
4	DSS_RTIB_DMA_REQ0	DSS RTIB DMA Request 0
5	DSS_RTIB_DMA_REQ1	DSS RTIB DMA Request 1
6	DSS_RTIB_DMA_REQ2	DSS RTIB DMA Request 2
7	DSS_RTIB_DMA_REQ3	DSS RTIB DMA Request 3
8	DSS_WDT_DMA_REQ0	DSS WDT DMA Request 0
9	DSS_WDT_DMA_REQ1	DSS WDT DMA Request 1
10	DSS_WDT_DMA_REQ2	DSS WDT DMA Request 2
11	DSS_WDT_DMA_REQ3	DSS WDT DMA Request 3
12	DSS_MCRC_DMA_REQ0	DSS MCRC DMA Request 0
13	DSS_MCRC_DMA_REQ1	DSS MCRC DMA Request 1
14	DSS_SCIA_RX_DMA_REQ	DSS SCIA RX DMA Request
15	DSS_SCIA_TX_DMA_REQ	DSS SCIA TX DMA Request
16	Reserved	Reserved
17	Reserved	Reserved
18	DSS_CBUFF_DMA_REQ0	DSS CBUF DMA Request 0
19	DSS_CBUFF_DMA_REQ1	DSS CBUF DMA Request 1
20	DSS_CBUFF_DMA_REQ2	DSS CBUF DMA Request 2
21	DSS_CBUFF_DMA_REQ3	DSS CBUF DMA Request 3
22	DSS_CBUFF_DMA_REQ4	DSS CBUF DMA Request 4
23	DSS_CBUFF_DMA_REQ5	DSS CBUF DMA Request 5
24	DSS_CBUFF_DMA_REQ6	DSS CBUF DMA Request 6
25		
26		
27		
28		
29		

Copyright © 2025 Texas Instruments Incorporated

Table 10-27. DSS TPCC_A Event Map (continued)

TPCC Event	Define Name	Decscription
30		
31		
32	DSS_HWA_DMA_REQ0	DSS HWA DMA Request 0
33	DSS_HWA_DMA_REQ1	DSS HWA DMA Request 1
34	DSS_HWA_DMA_REQ2	DSS HWA DMA Request 2
35	DSS_HWA_DMA_REQ3	DSS HWA DMA Request 3
36	DSS_HWA_DMA_REQ4	DSS HWA DMA Request 4
37	DSS_HWA_DMA_REQ5	DSS HWA DMA Request 5
38	DSS_HWA_DMA_REQ6	DSS HWA DMA Request 6
39	DSS_HWA_DMA_REQ7	DSS HWA DMA Request 7
40	DSS_HWA_DMA_REQ8	DSS HWA DMA Request 8
41	DSS_HWA_DMA_REQ9	DSS HWA DMA Request 9
42	DSS_HWA_DMA_REQ10	DSS HWA DMA Request 10
43	DSS_HWA_DMA_REQ11	DSS HWA DMA Request 11
44	DSS_HWA_DMA_REQ12	DSS HWA DMA Request 12
45	DSS_HWA_DMA_REQ13	DSS HWA DMA Request 13
46	DSS_HWA_DMA_REQ14	DSS HWA DMA Request 14
47	DSS_HWA_DMA_REQ15	DSS HWA DMA Request 15
48	DSS_HWA_DMA_REQ16	DSS HWA DMA Request 16
49	DSS_HWA_DMA_REQ17	DSS HWA DMA Request 17
50	DSS_HWA_DMA_REQ18	DSS HWA DMA Request 18
51	DSS_HWA_DMA_REQ19	DSS HWA DMA Request 19
52	DSS_HWA_DMA_REQ20	DSS HWA DMA Request 20
53	DSS_HWA_DMA_REQ21	DSS HWA DMA Request 21
54	DSS_HWA_DMA_REQ22	DSS HWA DMA Request 22
55	DSS_HWA_DMA_REQ23	DSS HWA DMA Request 23
56	DSS_HWA_DMA_REQ24	DSS HWA DMA Request 24
57	DSS_HWA_DMA_REQ25	DSS HWA DMA Request 25
58	DSS_HWA_DMA_REQ26	DSS HWA DMA Request 26
59	DSS_HWA_DMA_REQ27	DSS HWA DMA Request 27
60	DSS_HWA_DMA_REQ28	DSS HWA DMA Request 28
61	DSS_HWA_DMA_REQ29	DSS HWA DMA Request 29
62	DSS_HWA_DMA_REQ30	DSS HWA DMA Request 30
63	DSS_HWA_DMA_REQ31	DSS HWA DMA Request 31

Table 10-28. TPCC_B/TPCC_C Event Map

TPCC Event	Define Name	Description
0	DSS_RTIA_DMA_REQ0	DSS RTIA DMA Request 0
1	DSS_RTIA_DMA_REQ1	DSS RTIA DMA Request 1
2	DSS_RTIA_DMA_REQ2	DSS RTIA DMA Request 2
3	DSS_RTIA_DMA_REQ3	DSS RTIA DMA Request 3
4	DSS_RTIB_DMA_REQ0	DSS RTIB DMA Request 0
5	DSS_RTIB_DMA_REQ1	DSS RTIB DMA Request 1
6	DSS_RTIB_DMA_REQ2	DSS RTIB DMA Request 2
7	DSS_RTIB_DMA_REQ3	DSS RTIB DMA Request 3

Copyright © 2025 Texas Instruments Incorporated

Table 10-28. TPCC_B/TPCC_C Event Map (continued)

TPCC Event	Define Name	Description
8	DSS_WDT_DMA_REQ0	DSS WDT DMA Request 0
9	DSS_WDT_DMA_REQ1	DSS WDT DMA Request 1
10	DSS_WDT_DMA_REQ2	DSS WDT DMA Request 2
11	DSS_WDT_DMA_REQ3	DSS WDT DMA Request 3
12	DSS_MCRC_DMA_REQ0	DSS MCRC DMA Request 0
13	DSS_MCRC_DMA_REQ1	DSS MCRC DMA Request 1
14	DSS_SCIA_RX_DMA_REQ	DSS SCIA RX DMA Request
15	DSS_SCIA_TX_DMA_REQ	DSS SCIA TX DMA Request
16	RCSS_CSI2A_EOF_INT	RCSS CSI2A/B End of Frame Interrupt (all contexts combined interrupt)
17	RCSS_CSI2A_EOL_INT	RCSS CSI2A/B End of Line Interrupt (all contexts combined interrupt)
18	DSS_CBUFF_DMA_REQ0	DSS CBUF DMA Request 0
19	DSS_CBUFF_DMA_REQ1	DSS CBUF DMA Request 1
20	DSS_CBUFF_DMA_REQ2	DSS CBUF DMA Request 2
21	DSS_CBUFF_DMA_REQ3	DSS CBUF DMA Request 3
22	DSS_CBUFF_DMA_REQ4	DSS CBUF DMA Request 4
23	DSS_CBUFF_DMA_REQ5	DSS CBUF DMA Request 5
24	DSS_CBUFF_DMA_REQ6	DSS CBUF DMA Request 6
25	RCSS_CSI2A_SOF_INT0	RCSS_CSI2A/B Frame Start Trigger 0(Selective frame start based on Register RCSS_CSI2A/B_CFG in RCSS_CTRL
26	RCSS_CSI2A_SOF_INT1	RCSS_CSI2A/B Frame Start Trigger 1(Selective frame start based on Register RCSS_CSI2A/B_CFG in RCSS_CTRL
27	RCSS_CSI2A_EOL_CNTX0_INT	RCSS_CSI2A/B End of Line Interrupt for Context 0
28	RCSS_CSI2A_EOL_CNTX1_INT	RCSS_CSI2A/B End of Line Interrupt for Context 1
29	RCSS_CSI2A_EOL_CNTX2_INT	RCSS_CSI2A/B End of Line Interrupt for Context 2
30	RCSS_CSI2A_EOL_CNTX3_INT	RCSS_CSI2A/B End of Line Interrupt for Context 3
31	Reserved	Reserved
32	DSS_HWA_DMA_REQ0	DSS HWA DMA Request 0
33	DSS_HWA_DMA_REQ1	DSS HWA DMA Request 1
34	DSS_HWA_DMA_REQ2	DSS HWA DMA Request 2
35	DSS_HWA_DMA_REQ3	DSS HWA DMA Request 3
36	DSS_HWA_DMA_REQ4	DSS HWA DMA Request 4
37	DSS_HWA_DMA_REQ5	DSS HWA DMA Request 5
38	DSS_HWA_DMA_REQ6	DSS HWA DMA Request 6
39	DSS_HWA_DMA_REQ7	DSS HWA DMA Request 7
40	DSS_HWA_DMA_REQ8	DSS HWA DMA Request 8
41	DSS_HWA_DMA_REQ9	DSS HWA DMA Request 9
42	DSS_HWA_DMA_REQ10	DSS HWA DMA Request 10
43	DSS_HWA_DMA_REQ11	DSS HWA DMA Request 11
44	DSS_HWA_DMA_REQ12	DSS HWA DMA Request 12
45	DSS_HWA_DMA_REQ13	DSS HWA DMA Request 13
46	DSS_HWA_DMA_REQ14	DSS HWA DMA Request 14
47	DSS_HWA_DMA_REQ15	DSS HWA DMA Request 15
48	DSS_HWA_DMA_REQ16	DSS HWA DMA Request 16
49	DSS_HWA_DMA_REQ17	DSS HWA DMA Request 17

Copyright © 2025 Texas Instruments Incorporated

Table 10-28. TPCC_B/TPCC_C Event Map (continued)

TPCC Event	Define Name	Description
50	DSS_HWA_DMA_REQ18	DSS HWA DMA Request 18
51	DSS_HWA_DMA_REQ19	DSS HWA DMA Request 19
52	DSS_HWA_DMA_REQ20	DSS HWA DMA Request 20
53	DSS_HWA_DMA_REQ21	DSS HWA DMA Request 21
54	DSS_HWA_DMA_REQ22	DSS HWA DMA Request 22
55	DSS_HWA_DMA_REQ23	DSS HWA DMA Request 23
56	DSS_HWA_DMA_REQ24	DSS HWA DMA Request 24
57	DSS_HWA_DMA_REQ25	DSS HWA DMA Request 25
58	DSS_HWA_DMA_REQ26	DSS HWA DMA Request 26
59	DSS_HWA_DMA_REQ27	DSS HWA DMA Request 27
60	DSS_HWA_DMA_REQ28	DSS HWA DMA Request 28
61	DSS_HWA_DMA_REQ29	DSS HWA DMA Request 29
62	DSS_HWA_DMA_REQ30	DSS HWA DMA Request 30
63	DSS_HWA_DMA_REQ31	DSS HWA DMA Request 31

10.1.5.4 Radar Control Subsystem EDMA Event Map

Table 10-29. Radar Constrol Subsystem EDMA Event Map

TPCC Event	Define Name	Description
0	RCSS_SPIA_DMA_REQ0	RCSS_SPIA DMA Request 0
1	RCSS_SPIA_DMA_REQ1	RCSS_SPIA DMA Request 1
2	RCSS_SPIA_DMA_REQ2	RCSS_SPIA DMA Request 2
3	RCSS_SPIA_DMA_REQ3	RCSS_SPIA DMA Request 3
4	RCSS_SPIA_DMA_REQ4	RCSS_SPIA DMA Request 4
5	RCSS_SPIA_DMA_REQ5	RCSS_SPIA DMA Request 5
6	RCSS_SPIB_DMA_REQ0	RCSS_SPIB DMA Request 0
7	RCSS_SPIB_DMA_REQ1	RCSS_SPIB DMA Request 1
8	RCSS_SPIB_DMA_REQ2	RCSS_SPIB DMA Request 2
9	RCSS_SPIB_DMA_REQ3	RCSS_SPIB DMA Request 3
10	RCSS_SPIB_DMA_REQ4	RCSS_SPIB DMA Request 4
11	RCSS_SPIB_DMA_REQ5	RCSS_SPIB DMA Request 5
12	RCSS_ECAP_DMA_REQ	RCSS_ECAP DMA Request
13	Reserved	Reserved
14	Reserved	Reserved
15	Reserved	Reserved
16	RCSS_CSI2A_EOF_INT	RCSS CSI2A End Of Frame Interrupt
17	RCSS_CSI2A_EOL_INT	RCSS CSI2A End Of Line Interrupt
18	RCSS_CSI2A_EOL_CNTX0_INT	RCSS_CSI2A End of Line Interrupt for Context 0
19	RCSS_CSI2A_EOL_CNTX1_INT	RCSS_CSI2A End of Line Interrupt for Context 1
20	RCSS_CSI2A_EOL_CNTX2_INT	RCSS_CSI2A End of Line Interrupt for Context 2
21	RCSS_CSI2A_EOL_CNTX3_INT	RCSS_CSI2A End of Line Interrupt for Context 3
22	RCSS_CSI2A_EOL_CNTX4INT	RCSS_CSI2A End of Line Interrupt for Context 4
23	RCSS_CSI2A_EOL_CNTX5_INT	RCSS_CSI2A End of Line Interrupt for Context 5
24	RCSS_CSI2A_EOL_CNTX6_INT	RCSS_CSI2A End of Line Interrupt for Context 6
25	RCSS_CSI2A_EOL_CNTX7_INT	RCSS_CSI2A End of Line Interrupt for Context 7
26	RCSS_CSI2A_SOF_INT0	RCSS_CSI2A Frame Start Trigger 0

Copyright © 2025 Texas Instruments Incorporated

Table 10-29. Radar Constrol Subsystem EDMA Event Map (continued)

TPCC Event	Define Name	Description
27	RCSS_CSI2A_SOF_INT1	RCSS_CSI2A Frame Start Trigger 1
28	Reserved	Reserved
29	Reserved	Reserved
30	Reserved	Reserved
31	Reserved	Reserved
32	RCSS_CSI2B_EOF_INT	RCSS CSI2B End Of Frame Interrupt
33	RCSS_CSI2B_EOL_INT	RCSS CSI2B End Of Line Interrupt
34	RCSS_CSI2B_EOL_CNTX0_INT	RCSS_CSI2B End of Line Interrupt for Context 0
35	RCSS_CSI2B_EOL_CNTX1_INT	RCSS_CSI2B End of Line Interrupt for Context 1
36	RCSS_CSI2B_EOL_CNTX2_INT	RCSS_CSI2B End of Line Interrupt for Context 2
37	RCSS_CSI2B_EOL_CNTX3_INT	RCSS_CSI2B End of Line Interrupt for Context 3
38	RCSS_CSI2B_EOL_CNTX4_INT	RCSS_CSI2B End of Line Interrupt for Context 4
39	RCSS_CSI2B_EOL_CNTX5_INT	RCSS_CSI2B End of Line Interrupt for Context 5
40	RCSS_CSI2B_EOL_CNTX6_INT	RCSS_CSI2B End of Line Interrupt for Context 6
41	RCSS_CSI2B_EOL_CNTX7_INT	RCSS_CSI2B End of Line Interrupt for Context 7
42	RCSS_CSI2B_SOF_INT0	RCSS_CSI2B Frame Start Trigger 0
43	RCSS_CSI2B_SOF_INT1	RCSS_CSI2B Frame Start Trigger 1
44	RCSS_SCIA_TX_SINGLE_REQ	RCSS_SCIA Transmit Single Request
45	RCSS_SCIA_TX_BURST_REQ	RCSS_SCIA Transmit Burst Request
46	Reserved	Reserved
47	Reserved	Reserved
48	RCSS_MCASPA_TX_REQ	RCSS_MCASPA Transmit Event Pending
49	RCSS_MCASPB_TX_REQ	RCSS_MCASPB Transmit Event Pending
50	RCSS_MCASPC_TX_REQ	RCSS_MCASPC Transmit Event Pending
51	RCSS_MCASPA_RX_REQ	RCSS_MCASPA Receive Event Pending
52	RCSS_MCASPB_RX_REQ	RCSS_MCASPB Receive Event Pending
53	RCSS_MCASPC_RX_REQ	RCSS_MCASPC Receive Event Pending
54	RCSS_I2CA_TX_DMA_REQ	RCSS_I2CA Transmit DMA Request
55	RCSS_I2CA_RX_DMA_REQ	RCSS_I2CA Receive DMA Request
56	RCSS_I2CB_TX_DMA_REQ	RCSS_I2CB Transmit DMA Request
57	RCSS_I2CB_RX_DMA_REQ	RCSS_I2CB Receive DMA Request
58	RCSS_SCIA_RX_SINGLE_REQ	RCSS_SCIA Receive Single Request
59	RCSS_SCIA_RX_BURST_REQ	RCSS_SCIA Receive Burst Request
60	Reserved	Reserved
61	Reserved	Reserved
62	Reserved	Reserved
63	Reserved	Reserved

Copyright © 2025 Texas Instruments Incorporated

10.1.6 EDMA Debug Checklist and Programming Tips

This section lists some tips to keep in mind while debugging applications using the EDMA controller.

10.1.6.1 EDMA Debug Checklist

Table 10-30 provides some common issues and their probable causes and resolutions.

Table 10-30. Debug Checklist

Issue	Description/Solution
The transfer associated with the channel does not happen. The channel does not get serviced.	The EDMA_TPCC may not service a transfer request, even though the associated PaRAM set is programmed appropriately. Check for the following: 1) Verify that events are enabled, i.e., if an external/peripheral event is latched in Event Registers EDMA_TPCC_ER / EDMA_TPCC_ERH, check that the event is enabled in the Event Enable Registers EDMA_TPCC_EER / EDMA_TPCC_EERH. Similarly, for QDMA channels, check that QDMA events are appropriately enabled in the QDMA Event Enable Register EDMA_TPCC_QEER. 2) Verify that the DMA or QDMA Secondary Event Register EDMA_TPCC_SER / EDMA_TPCC_SERH / EDMA_TPCC_QSER bits corresponding to the particular event or channel are not set.
The Secondary Event Registers bits are set, not allowing additional transfers to occur on a channel.	It is possible that a trigger event was received when the parameter set associated with the channel/event was a NULL set for a previous transfer on the channel. This is typical in two cases: 1) QDMA channels: Typically if the parameter set is non-static and expected to be terminated by a NULL set (i.e., EDMA_TPCC_OPT_n[3] STATIC = 0x0, EDMA_TPCC_LNK_n[15:0] LINK = 0xFFFF), the parameter set is updated with a NULL set after submission of the last TR. Because QDMA channels are auto-triggered, this update caused the generation of an event. An event generated for a NULL set causes an error condition and results in setting the bits corresponding to the QDMA channel in the EDMA_TPCC_QEMR and EDMA_TPCC_QSER. This will disable further prioritization of the channel. 2) DMA channels used in a continuous mode: The peripheral may be set up to continuously generate infinite events (for instance, in case of McASP, every time the data shifts out from the DXR register, it generates an XEVT). The parameter set may be programmed to expect only a finite number of events and to be terminated by a NULL link. After the expected number of events, the parameter set is reloaded with a NULL parameter set. Because the peripheral will generate additional events, an error condition is set in the EDMA_TPCC_SER[31:0] E*n* and EDMA_TPCC_EMR[31:0] E*n* set, preventing further event prioritization. Check the number of events received is limited to the expected number of events for which the parameter set is programmed, or check the bits corresponding to particular channel or event are not set in the Secondary event registers (EDMA_TPCC_SER / EDMA_TPCC_SERH / EDMA_TPCC_QSER) and Event Missed Registers (EDMA_TPCC_EMR / EDMA_TPCC_EMRH / EDMA_TPCC_QEMR) before trying to perform subsequent transfers for the event/channel.

Copyright © 2025 Texas Instruments Incorporated

Table 10-30. Debug Checklist (continued)

Issue	Description/Solution
Completion interrupts are not asserted, or no further interrupts are received after the first completion interrupt.	Check the following: 1) The interrupt generation is enabled in the EDMA_TPCC_OPT_n of the associated PaRAM set (EDMA_TPCC_OPT_n[20] TCINTEN = 0x1 and/or EDMA_TPCC_OPT_n[20] ITCINTEN = 0x1). 2) The interrupts are enabled in the EDMA Channel Controller, via the Interrupt Enable Registers (EDMA_TPCC_IER / EDMA_TPCC_IERH). 3) The corresponding interrupts are enabled in the device interrupt controller. 4) The set interrupts are cleared in the interrupt pending registers (EDMA_TPCC_IPR / EDMA_TPCC_IPRH) before exiting the transfer completion interrupt service routine (ISR). See Section 10.1.3.9.1.2 *Clearing Transfer Complerion Interrupts* for details on writing EDMA ISRs. 5) If working with shadow region interrupts, make sure that the DMA Region Access registers (EDMA_TPCC_DRAEM_k / EDMA_TPCC_DRAEHM_k) are set up properly, because the EDMA_TPCC_DRAEM_k / EDMA_TPCC_DRAEHM_k registers act as secondary enables for shadow region completion interrupts, along with the EDMA_TPCC_IER / EDMA_TPCC_IERH registers. If working with shadow region interrupts, make sure that the bits corresponding to the transfer completion code EDMA_TPCC_OPT_n[17:12] TCC value are also enabled in the EDMA_TPCC_DRAEM_k / EDMA_TPCC_DRAEHM_k registers. For instance, if the PaRAM set associated with Channel 0 returns a completion code of 63 EDMA_TPCC_OPT_n[17:12] TCC = 63, ensure that EDMA_TPCC_DRAEHM_k[31] E63 is also set for a shadow region completion interrupt because the interrupt pending register bit set will be EDMA_TPCC_IPRH[31] I63 (not EDMA_TPCC_IPR[0] I0).

Copyright © 2025 Texas Instruments Incorporated

10.1.6.2 EDMA Programming Tips

1. For several registers, the setting and clearing of bits needs to be done via separate dedicated registers. For example, the Event Register (EDMA_TPCC_ER / EDMA_TPCC_ERH) can only be cleared by writing a 1 to the corresponding bits in the Event Clear Registers (EDMA_TPCC_ECR / EDMA_TPCC_ECRH). Similarly, the Event Enable Register (EDMA_TPCC_EER / EDMA_TPCC_EERH) bits can only be set with writing of 0x1 to the Event Enable Set Registers (EDMA_TPCC_EESR / EDMA_TPCC_EESRH) and cleared with writing of 0x1 to the corresponding bits in the Event Enable Clear Register (EDMA_TPCC_EECR / EDMA_TPCC_EECRH).
2. Writes to the shadow region memory maps are governed by region access registers (EDMA_TPCC_DRAE / EDMA_TPCC_DRAEHM_k / EDMA_TPCC_QRAEN_k). If the appropriate channels are not enabled in these registers, read/write access to the shadow region memory map is not enabled.
3. When working with shadow region completion interrupts, ensure that the DMA Region Access Registers (EDMA_TPCC_DRAEM_k / EDMA_TPCC_DRAEHM_k) for every region are set in a mutually exclusive way (unless it is a requirement for an application). If there is an overlap in the allocated channels and transfer completion codes (setting of Interrupt Pending Register bits) in the region resource allocation, it results in multiple shadow region completion interrupts.
   For example, if EDMA_TPCC_DRAEM_k.DRAEM_0[0] E0 and EDMA_TPCC_DRAEM_k.DRAEM_1[0] E0 are both set, then on completion of a transfer that returns a TCC = 0x0, they will generate both shadow region 0 and 1 completion interrupts.
4. While programming a non-dummy parameter set, ensure the EDMA_TPCC_CCNT_n[15:0] CCNT is not left to zero.
5. Enable the EDMA_TPCC error interrupt in the device controller and attach an interrupt service routine (ISR) to ensure that error conditions are not missed in an application and are appropriately addressed with the ISR.
6. Depending on the application, it can want to break large transfers into smaller transfers and use self-chaining to prevent starvation of other events in an event queue.
7. In applications where a large transfer is broken into sets of small transfers using chaining or other methods, it chooses to use the early chaining option to reduce the time between the sets of transfers and increase the throughput.
   However, keep in mind that with early completion, all data might have not been received at the end point when completion is reported because the EDMA_TPCC internally signals completion when the TR is submitted to the EDMA_TPTC, potentially before any data has been transferred.
8. The event queue entries can be observed to determine the last few events if there is a system failure (provided the entries were not bypassed).

10.1.7 EDMA Registers

Copyright © 2025 Texas Instruments Incorporated

10.1.7.1 TPCC Registers

Table 10-31 lists the TPCC registers. All register offset addresses not listed in Table 10-31 should be considered as reserved locations and the register contents should not be modified.

Table 10-31. TPCC Registers

Offset	Acronym	Register Name	Section
0h	PID	PID	Section 11.1.7.1.1
4h	CCCFG	CCCFG	Section 11.1.7.1.2
200h	QCHMAPN	QCHMAPN	Section 11.1.7.1.3
240h	DMAQNUMN	DMAQNUMN	Section 11.1.7.1.4
260h	QDMAQNUM	QDMAQNUM	Section 11.1.7.1.5
280h	QUETCMAP	QUETCMAP	Section 11.1.7.1.6
284h	QUEPRI	QUEPRI	Section 11.1.7.1.7
300h	EMR	EMR	Section 11.1.7.1.8
304h	EMRH	EMRH	Section 11.1.7.1.9
308h	EMCR	EMCR	Section 11.1.7.1.10
30Ch	EMCRH	EMCRH	Section 11.1.7.1.11
310h	QEMR	QEMR	Section 11.1.7.1.12
314h	QEMCR	QEMCR	Section 11.1.7.1.13
318h	CCERR	CCERR	Section 11.1.7.1.14
31Ch	CCERRCLR	CCERRCLR	Section 11.1.7.1.15
320h	EEVAL	EEVAL	Section 11.1.7.1.16
340h	DRAEM	DRAEM	Section 11.1.7.1.17
344h	DRAEHM	DRAEHM	Section 11.1.7.1.18
380h	QRAEN	QRAEN	Section 11.1.7.1.19
400h	QNE0	QNE0	Section 11.1.7.1.20
404h	QNE1	QNE1	Section 11.1.7.1.21
408h	QNE2	QNE2	Section 11.1.7.1.22
40Ch	QNE3	QNE3	Section 11.1.7.1.23
410h	QNE4	QNE4	Section 11.1.7.1.24
414h	QNE5	QNE5	Section 11.1.7.1.25
418h	QNE6	QNE6	Section 11.1.7.1.26
41Ch	QNE7	QNE7	Section 11.1.7.1.27
420h	QNE8	QNE8	Section 11.1.7.1.28
424h	QNE9	QNE9	Section 11.1.7.1.29
428h	QNE10	QNE10	Section 11.1.7.1.30
42Ch	QNE11	QNE11	Section 11.1.7.1.31
430h	QNE12	QNE12	Section 11.1.7.1.32
434h	QNE13	QNE13	Section 11.1.7.1.33
438h	QNE14	QNE14	Section 11.1.7.1.34
43Ch	QNE15	QNE15	Section 11.1.7.1.35
600h	QSTATN	QSTATN	Section 11.1.7.1.36
620h	QWMTHRA	QWMTHRA	Section 11.1.7.1.37
640h	CCSTAT	CCSTAT	Section 11.1.7.1.38
700h	AETCTL	AETCTL	Section 11.1.7.1.39
704h	AETSTAT	AETSTAT	Section 11.1.7.1.40
708h	AETCMD	AETCMD	Section 11.1.7.1.41

Copyright © 2025 Texas Instruments Incorporated

Table 10-31. TPCC Registers (continued)

Offset	Acronym	Register Name	Section
1000h	ER	ER	Section 11.1.7.1.42
1004h	ERH	ERH	Section 11.1.7.1.43
1008h	ECR	ECR	Section 11.1.7.1.44
100Ch	ECRH	ECRH	Section 11.1.7.1.45
1010h	ESR	ESR	Section 11.1.7.1.46
1014h	ESRH	ESRH	Section 11.1.7.1.47
1018h	CER	CER	Section 11.1.7.1.48
101Ch	CERH	CERH	Section 11.1.7.1.49
1020h	EER	EER	Section 11.1.7.1.50
1024h	EERH	EERH	Section 11.1.7.1.51
1028h	EECR	EECR	Section 11.1.7.1.52
102Ch	EECRH	EECRH	Section 11.1.7.1.53
1030h	EESR	EESR	Section 11.1.7.1.54
1034h	EESRH	EESRH	Section 11.1.7.1.55
1038h	SER	SER	Section 11.1.7.1.56
103Ch	SERH	SERH	Section 11.1.7.1.57
1040h	SECR	SECR	Section 11.1.7.1.58
1044h	SECRH	SECRH	Section 11.1.7.1.59
1050h	IER	IER	Section 11.1.7.1.60
1054h	IERH	IERH	Section 11.1.7.1.61
1058h	IECR	IECR	Section 11.1.7.1.62
105Ch	IECRH	IECRH	Section 11.1.7.1.63
1060h	IESR	IESR	Section 11.1.7.1.64
1064h	IESRH	IESRH	Section 11.1.7.1.65
1068h	IPR	IPR	Section 11.1.7.1.66
106Ch	IPRH	IPRH	Section 11.1.7.1.67
1070h	ICR	ICR	Section 11.1.7.1.68
1074h	ICRH	ICRH	Section 11.1.7.1.69
1078h	IEVAL	IEVAL	Section 11.1.7.1.70
1080h	QER	QER	Section 11.1.7.1.71
1084h	QEER	QEER	Section 11.1.7.1.72
1088h	QEECR	QEECR	Section 11.1.7.1.73
108Ch	QEESR	QEESR	Section 11.1.7.1.74
1090h	QSER	QSER	Section 11.1.7.1.75
1094h	QSECR	QSECR	Section 11.1.7.1.76
2000h	ER_RN	ER_RN	Section 11.1.7.1.77
2004h	ERH_RN	ERH_RN	Section 11.1.7.1.78
2008h	ECR_RN	ECR_RN	Section 11.1.7.1.79
200Ch	ECRH_RN	ECRH_RN	Section 11.1.7.1.80
2010h	ESR_RN	ESR_RN	Section 11.1.7.1.81
2014h	ESRH_RN	ESRH_RN	Section 11.1.7.1.82
2018h	CER_RN	CER_RN	Section 11.1.7.1.83
201Ch	CERH_RN	CERH_RN	Section 11.1.7.1.84
2020h	EER_RN	EER_RN	Section 11.1.7.1.85
2024h	EERH_RN	EERH_RN	Section 11.1.7.1.86

Copyright © 2025 Texas Instruments Incorporated

Table 10-31. TPCC Registers (continued)

Offset	Acronym	Register Name	Section
2028h	EECR_RN	EECR_RN	Section 11.1.7.1.87
202Ch	EECRH_RN	EECRH_RN	Section 11.1.7.1.88
2030h	EESR_RN	EESR_RN	Section 11.1.7.1.89
2034h	EESRH_RN	EESRH_RN	Section 11.1.7.1.90
2038h	SER_RN	SER_RN	Section 11.1.7.1.91
203Ch	SERH_RN	SERH_RN	Section 11.1.7.1.92
2040h	SECR_RN	SECR_RN	Section 11.1.7.1.93
2044h	SECRH_RN	SECRH_RN	Section 11.1.7.1.94
2050h	IER_RN	IER_RN	Section 11.1.7.1.95
2054h	IERH_RN	IERH_RN	Section 11.1.7.1.96
2058h	IECR_RN	IECR_RN	Section 11.1.7.1.97
205Ch	IECRH_RN	IECRH_RN	Section 11.1.7.1.98
2060h	IESR_RN	IESR_RN	Section 11.1.7.1.99
2064h	IESRH_RN	IESRH_RN	Section 11.1.7.1.100
2068h	IPR_RN	IPR_RN	Section 11.1.7.1.101
206Ch	IPRH_RN	IPRH_RN	Section 11.1.7.1.102
2070h	ICR_RN	ICR_RN	Section 11.1.7.1.103
2074h	ICRH_RN	ICRH_RN	Section 11.1.7.1.104
2078h	IEVAL_RN	IEVAL_RN	Section 11.1.7.1.105
2080h	QER_RN	QER_RN	Section 11.1.7.1.106
2084h	QEER_RN	QEER_RN	Section 11.1.7.1.107
2088h	QEECR_RN	QEECR_RN	Section 11.1.7.1.108
208Ch	QEESR_RN	QEESR_RN	Section 11.1.7.1.109
2090h	QSER_RN	QSER_RN	Section 11.1.7.1.110
2094h	QSECR_RN	QSECR_RN	Section 11.1.7.1.111
4000h	OPT	OPT	Section 11.1.7.1.112
4004h	SRC	SRC	Section 11.1.7.1.113
4008h	ABCNT	ABCNT	Section 11.1.7.1.114
400Ch	DST	DST	Section 11.1.7.1.115
4010h	BIDX	BIDX	Section 11.1.7.1.116
4014h	LNK	LNK	Section 11.1.7.1.117
4018h	CIDX	CIDX	Section 11.1.7.1.118
401Ch	CCNT	CCNT	Section 11.1.7.1.119

Copyright © 2025 Texas Instruments Incorporated

10.1.7.1.1 PID Register (Offset = 0h) [reset = 4001AB00h]

PID is shown in Figure 10-27 and described in Table 10-32.

Return to the Table 10-31.

Peripheral ID Register

Figure 10-27. PID Register

31	30	29	28	27	26	25	24	23	22	21	20	19	18	17	16
SCHEME		RES1		FUNC											
R-1h		R-0h		R-1h											
15	14	13	12	11	10	9	8	7	6	5	4	3	2	1	0
RTL					MAJOR			CUSTOM		MINOR					
R-15h					R-3h			R-0h		R-0h					

Table 10-32. PID Register Field Descriptions

Bit	Field	Type	Reset	Description
31-30	SCHEME	R	1h	PID Scheme: Used to distinguish between old ID scheme and current. Spare bit to encode future schemes EDMA uses 'new scheme' indicated with value of 0x1.
29-28	RES1	R	0h	RESERVE FIELD
27-16	FUNC	R	1h	Function indicates a software compatible module family.
15-11	RTL	R	15h	RTL Version
10-8	MAJOR	R	3h	Major Revision
7-6	CUSTOM	R	0h	Custom revision field: Not used on this version of EDMA.
5-0	MINOR	R	0h	Minor Revision

Copyright © 2025 Texas Instruments Incorporated

10.1.7.1.2 CCCFG Register (Offset = 4h) [reset = 00213445h]

CCCFG is shown in Figure 10-28 and described in Table 10-33.

Return to the Table 10-31.

CC Configuration Register

Figure 10-28. CCCFG Register

31	30	29	28	27	26	25	24
RES2						MPEXIST	CHMAPEXIST
R-0h						R-0h	R-0h
23	22	21	20	19	18	17	16
RES3		NUMREGN		RES4	NUMTC		
R-0h		R-2h		R-0h	R-1h		
15	14	13	12	11	10	9	8
RES5	NUMPAENTRY			RES6	NUMINTCH		
R-0h	R-3h			R-0h	R-4h		
7	6	5	4	3	2	1	0
RES7	NUMQDMACH			RES8	NUMDMACH		
R-0h	R-4h			R-0h	R-5h		

Table 10-33. CCCFG Register Field Descriptions

Bit	Field	Type	Reset	Description
31-26	RES2	R	0h	RESERVE FIELD
25	MPEXIST	R	0h	Memory Protection Existence MPEXIST = 0 : No memory protection. MPEXIST = 1 : Memory Protection logic included.
24	CHMAPEXIST	R	0h	Channel Mapping Existence CHMAPEXIST = 0 : No Channel mapping. CHMAPEXIST = 1 : Channel mapping logic included.
23-22	RES3	R	0h	RESERVE FIELD
21-20	NUMREGN	R	2h	Number of MP and Shadow regions
19	RES4	R	0h	RESERVE FIELD
18-16	NUMTC	R	1h	Number of Queues/Number of TCs
15	RES5	R	0h	RESERVE FIELD
14-12	NUMPAENTRY	R	3h	Number of PaRAM entries
11	RES6	R	0h	RESERVE FIELD
10-8	NUMINTCH	R	4h	Number of Interrupt Channels
7	RES7	R	0h	RESERVE FIELD
6-4	NUMQDMACH	R	4h	Number of QDMA Channels
3	RES8	R	0h	RESERVE FIELD
2-0	NUMDMACH	R	5h	Number of DMA Channels

Copyright © 2025 Texas Instruments Incorporated

10.1.7.1.3 QCHMAPN Register (Offset = 200h) [reset = 0h]

QCHMAPN is shown in Figure 10-29 and described in Table 10-34.

Return to the Table 10-31.

QDMA Channel N Mapping Register

Figure 10-29. QCHMAPN Register

31	30	29	28	27	26	25	24
RES10							
R-0h							
23	22	21	20	19	18	17	16
RES10							
R-0h							
15	14	13	12	11	10	9	8
RES10			PAENTRY				
R-0h			R/W-0h				
7	6	5	4	3	2	1	0
PAENTRY			TRWORD			RESERVED	
R/W-0h			R/W-0h			R-	

Table 10-34. QCHMAPN Register Field Descriptions

Bit	Field	Type	Reset	Description
31-14	RES10	R	0h	RESERVE FIELD
13-5	PAENTRY	R/W	0h	PaRAM Entry number for QDMA Channel N.
4-2	TRWORD	R/W	0h	TRWORD points to the specific trigger word of the PaRAM Entry defined by PAENTRY. A write to the trigger word results in a QDMA Event being recognized.
1-0	RESERVED	R	0h	

Copyright © 2025 Texas Instruments Incorporated

10.1.7.1.4 DMAQNUMN Register (Offset = 240h) [reset = 0h]

DMAQNUMN is shown in Figure 10-30 and described in Table 10-35.

Return to the Table 10-31.

DMA Queue Number Register n Contains the Event queue number to be used for the corresponding DMA Channel.

Figure 10-30. DMAQNUMN Register

31	30	29	28	27	26	25	24
RES11	E7			RES12	E6		
R-0h	R/W-0h			R-0h	R/W-0h		
23	22	21	20	19	18	17	16
RES13	E5			RES14	E4		
R-0h	R/W-0h			R-0h	R/W-0h		
15	14	13	12	11	10	9	8
RES15	E3			RES16	E2		
R-0h	R/W-0h			R-0h	R/W-0h		
7	6	5	4	3	2	1	0
RES17	E1			RES18	E0		
R-0h	R/W-0h			R-0h	R/W-0h		

Table 10-35. DMAQNUMN Register Field Descriptions

Bit	Field	Type	Reset	Description
31	RES11	R	0h	RESERVE FIELD
30-28	E7	R/W	0h	DMA Queue Number for event #7
27	RES12	R	0h	RESERVE FIELD
26-24	E6	R/W	0h	DMA Queue Number for event #6
23	RES13	R	0h	RESERVE FIELD
22-20	E5	R/W	0h	DMA Queue Number for event #5
19	RES14	R	0h	RESERVE FIELD
18-16	E4	R/W	0h	DMA Queue Number for event #4
15	RES15	R	0h	RESERVE FIELD
14-12	E3	R/W	0h	DMA Queue Number for event #3
11	RES16	R	0h	RESERVE FIELD
10-8	E2	R/W	0h	DMA Queue Number for event #2
7	RES17	R	0h	RESERVE FIELD
6-4	E1	R/W	0h	DMA Queue Number for event #1
3	RES18	R	0h	RESERVE FIELD
2-0	E0	R/W	0h	DMA Queue Number for event #0

Copyright © 2025 Texas Instruments Incorporated

10.1.7.1.5 QDMAQNUM Register (Offset = 260h) [reset = 0h]

QDMAQNUM is shown in Figure 10-31 and described in Table 10-36.

Return to the Table 10-31.

QDMA Queue Number Register Contains the Event queue number to be used for the corresponding QDMA Channel.

Figure 10-31. QDMAQNUM Register

31	30	29	28	27	26	25	24
RES19	E7			RES20	E6		
R-0h	R/W-0h			R-0h	R/W-0h		
23	22	21	20	19	18	17	16
RES21	E5			RES22	E4		
R-0h	R/W-0h			R-0h	R/W-0h		
15	14	13	12	11	10	9	8
RES23	E3			RES24	E2		
R-0h	R/W-0h			R-0h	R/W-0h		
7	6	5	4	3	2	1	0
RES25	E1			RES26	E0		
R-0h	R/W-0h			R-0h	R/W-0h		

Table 10-36. QDMAQNUM Register Field Descriptions

Bit	Field	Type	Reset	Description
31	RES19	R	0h	RESERVE FIELD
30-28	E7	R/W	0h	QDMA Queue Number for event #7
27	RES20	R	0h	RESERVE FIELD
26-24	E6	R/W	0h	QDMA Queue Number for event #6
23	RES21	R	0h	RESERVE FIELD
22-20	E5	R/W	0h	QDMA Queue Number for event #5
19	RES22	R	0h	RESERVE FIELD
18-16	E4	R/W	0h	QDMA Queue Number for event #4
15	RES23	R	0h	RESERVE FIELD
14-12	E3	R/W	0h	QDMA Queue Number for event #3
11	RES24	R	0h	RESERVE FIELD
10-8	E2	R/W	0h	QDMA Queue Number for event #2
7	RES25	R	0h	RESERVE FIELD
6-4	E1	R/W	0h	QDMA Queue Number for event #1
3	RES26	R	0h	RESERVE FIELD
2-0	E0	R/W	0h	QDMA Queue Number for event #0

Copyright © 2025 Texas Instruments Incorporated

10.1.7.1.6 QUETCMAP Register (Offset = 280h) [reset = 10h]

QUETCMAP is shown in Figure 10-32 and described in Table 10-37.

Return to the Table 10-31.

Queue to TC Mapping

Figure 10-32. QUETCMAP Register

31	30	29	28	27	26	25	24
RES27							
R-0h							
23	22	21	20	19	18	17	16
RES27							
R-0h							
15	14	13	12	11	10	9	8
RES27							
R-0h							
7	6	5	4	3	2	1	0
RES27	TCNUMQ1			RES28	TCNUMQ0		
R-0h	R/W-1h			R-0h	R/W-0h		

Table 10-37. QUETCMAP Register Field Descriptions

Bit	Field	Type	Reset	Description
31-7	RES27	R	0h	RESERVE FIELD
6-4	TCNUMQ1	R/W	1h	TC Number for Queue N: Defines the TC number that Event Queue N TRs are written to.
3	RES28	R	0h	RESERVE FIELD
2-0	TCNUMQ0	R/W	0h	TC Number for Queue N: Defines the TC number that Event Queue N TRs are written to.

Copyright © 2025 Texas Instruments Incorporated

10.1.7.1.7 QUEPRI Register (Offset = 284h) [reset = 0h]

QUEPRI is shown in Figure 10-33 and described in Table 10-38.

Return to the Table 10-31.

Queue Priority

Figure 10-33. QUEPRI Register

31	30	29	28	27	26	25	24
RES29							
R-0h							
23	22	21	20	19	18	17	16
RES29							
R-0h							
15	14	13	12	11	10	9	8
RES29							
R-0h							
7	6	5	4	3	2	1	0
RES29	PRIQ1			RES30	PRIQ0		
R-0h	R/W-0h			R-0h	R/W-0h		

Table 10-38. QUEPRI Register Field Descriptions

Bit	Field	Type	Reset	Description
31-7	RES29	R	0h	RESERVE FIELD
6-4	PRIQ1	R/W	0h	Priority Level for Queue 1 Dictates the priority level used for the OPTIONS field programmation for Qn TRs. Sets the priority used for TC read and write commands.
3	RES30	R	0h	RESERVE FIELD
2-0	PRIQ0	R/W	0h	Priority Level for Queue 0 Dictates the priority level used for the OPTIONS field programmation for Qn TRs. Sets the priority used for TC read and write commands.

Copyright © 2025 Texas Instruments Incorporated

10.1.7.1.8 EMR Register (Offset = 300h) [reset = 0h]

EMR is shown in Figure 10-34 and described in Table 10-39.

Return to the Table 10-31.

Event Missed Register: The Event Missed register is set if 2 events are received without the first event being cleared or if a Null TR is serviced. Chained events (CER) Set Events (ESR) and normal events (ER) are treated individually. If any bit in the EMR register is set (and all errors (including QEMR/CCERR) were previously clear) then an error will be signaled with TPCC error interrupt.

Figure 10-34. EMR Register

31	30	29	28	27	26	25	24	23	22	21	20	19	18	17	16
E31	E30	E29	E28	E27	E26	E25	E24	E23	E22	E21	E20	E19	E18	E17	E16
R-0h	R-0h	R-0h	R-0h	R-0h	R-0h	R-0h	R-0h	R-0h	R-0h	R-0h	R-0h	R-0h	R-0h	R-0h	R-0h
15	14	13	12	11	10	9	8	7	6	5	4	3	2	1	0
E15	E14	E13	E12	E11	E10	E9	E8	E7	E6	E5	E4	E3	E2	E1	E0
R-0h	R-0h	R-0h	R-0h	R-0h	R-0h	R-0h	R-0h	R-0h	R-0h	R-0h	R-0h	R-0h	R-0h	R-0h	R-0h

Table 10-39. EMR Register Field Descriptions

Bit	Field	Type	Reset	Description
31	E31	R	0h	Event Missed #31
30	E30	R	0h	Event Missed #30
29	E29	R	0h	Event Missed #29
28	E28	R	0h	Event Missed #28
27	E27	R	0h	Event Missed #27
26	E26	R	0h	Event Missed #26
25	E25	R	0h	Event Missed #25
24	E24	R	0h	Event Missed #24
23	E23	R	0h	Event Missed #23
22	E22	R	0h	Event Missed #22
21	E21	R	0h	Event Missed #21
20	E20	R	0h	Event Missed #20
19	E19	R	0h	Event Missed #19
18	E18	R	0h	Event Missed #18
17	E17	R	0h	Event Missed #17
16	E16	R	0h	Event Missed #16
15	E15	R	0h	Event Missed #15
14	E14	R	0h	Event Missed #14
13	E13	R	0h	Event Missed #13
12	E12	R	0h	Event Missed #12
11	E11	R	0h	Event Missed #11
10	E10	R	0h	Event Missed #10
9	E9	R	0h	Event Missed #9
8	E8	R	0h	Event Missed #8
7	E7	R	0h	Event Missed #7

Copyright © 2025 Texas Instruments Incorporated

Table 10-39. EMR Register Field Descriptions (continued)

Bit	Field	Type	Reset	Description
6	E6	R	0h	Event Missed #6
5	E5	R	0h	Event Missed #5
4	E4	R	0h	Event Missed #4
3	E3	R	0h	Event Missed #3
2	E2	R	0h	Event Missed #2
1	E1	R	0h	Event Missed #1
0	E0	R	0h	Event Missed #0

Copyright © 2025 Texas Instruments Incorporated

10.1.7.1.9 EMRH Register (Offset = 304h) [reset = 0h]

EMRH is shown in Figure 10-35 and described in Table 10-40.

Return to the Table 10-31.

Event Missed Register (High Part): The Event Missed register is set if 2 events are received without the first event being cleared or if a Null TR is serviced. Chained events (CER) Set Events (ESR) and normal events (ER) are treated individually. If any bit in the EMR register is set (and all errors (including QEMR/CCERR) were previously clear) then an error will be signaled with TPCC error interrupt.

Figure 10-35. EMRH Register

31	30	29	28	27	26	25	24	23	22	21	20	19	18	17	16
E63	E62	E61	E60	E59	E58	E57	E56	E55	E54	E53	E52	E51	E50	E49	E48
R-0h	R-0h	R-0h	R-0h	R-0h	R-0h	R-0h	R-0h	R-0h	R-0h	R-0h	R-0h	R-0h	R-0h	R-0h	R-0h
15	14	13	12	11	10	9	8	7	6	5	4	3	2	1	0
E47	E46	E45	E44	E43	E42	E41	E40	E39	E38	E37	E36	E35	E34	E33	E32
R-0h	R-0h	R-0h	R-0h	R-0h	R-0h	R-0h	R-0h	R-0h	R-0h	R-0h	R-0h	R-0h	R-0h	R-0h	R-0h

Table 10-40. EMRH Register Field Descriptions

Bit	Field	Type	Reset	Description
31	E63	R	0h	Event Missed #63
30	E62	R	0h	Event Missed #62
29	E61	R	0h	Event Missed #61
28	E60	R	0h	Event Missed #60
27	E59	R	0h	Event Missed #59
26	E58	R	0h	Event Missed #58
25	E57	R	0h	Event Missed #57
24	E56	R	0h	Event Missed #56
23	E55	R	0h	Event Missed #55
22	E54	R	0h	Event Missed #54
21	E53	R	0h	Event Missed #53
20	E52	R	0h	Event Missed #52
19	E51	R	0h	Event Missed #51
18	E50	R	0h	Event Missed #50
17	E49	R	0h	Event Missed #49
16	E48	R	0h	Event Missed #48
15	E47	R	0h	Event Missed #47
14	E46	R	0h	Event Missed #46
13	E45	R	0h	Event Missed #45
12	E44	R	0h	Event Missed #44
11	E43	R	0h	Event Missed #43
10	E42	R	0h	Event Missed #42
9	E41	R	0h	Event Missed #41
8	E40	R	0h	Event Missed #40
7	E39	R	0h	Event Missed #39

Copyright © 2025 Texas Instruments Incorporated

Table 10-40. EMRH Register Field Descriptions (continued)

Bit	Field	Type	Reset	Description
6	E38	R	0h	Event Missed #38
5	E37	R	0h	Event Missed #37
4	E36	R	0h	Event Missed #36
3	E35	R	0h	Event Missed #35
2	E34	R	0h	Event Missed #34
1	E33	R	0h	Event Missed #33
0	E32	R	0h	Event Missed #32

Copyright © 2025 Texas Instruments Incorporated

10.1.7.1.10 EMCR Register (Offset = 308h) [reset = 0h]

EMCR is shown in Figure 10-36 and described in Table 10-41.

Return to the Table 10-31.

Event Missed Clear Register: CPU write of '1' to the EMCR.En bit causes the EMR.En bit to be cleared. CPU write of '0' has no effect.. All error bits must be cleared before additional error interrupts will be asserted by CC.

Figure 10-36. EMCR Register

31	30	29	28	27	26	25	24	23	22	21	20	19	18	17	16
E31	E30	E29	E28	E27	E26	E25	E24	E23	E22	E21	E20	E19	E18	E17	E16
W-0h	W-0h	W-0h	W-0h	W-0h	W-0h	W-0h	W-0h	W-0h	W-0h	W-0h	W-0h	W-0h	W-0h	W-0h	W-0h
15	14	13	12	11	10	9	8	7	6	5	4	3	2	1	0
E15	E14	E13	E12	E11	E10	E9	E8	E7	E6	E5	E4	E3	E2	E1	E0
W-0h	W-0h	W-0h	W-0h	W-0h	W-0h	W-0h	W-0h	W-0h	W-0h	W-0h	W-0h	W-0h	W-0h	W-0h	W-0h

Table 10-41. EMCR Register Field Descriptions

Bit	Field	Type	Reset	Description
31	E31	W	0h	Event Missed Clear #31
30	E30	W	0h	Event Missed Clear #30
29	E29	W	0h	Event Missed Clear #29
28	E28	W	0h	Event Missed Clear #28
27	E27	W	0h	Event Missed Clear #27
26	E26	W	0h	Event Missed Clear #26
25	E25	W	0h	Event Missed Clear #25
24	E24	W	0h	Event Missed Clear #24
23	E23	W	0h	Event Missed Clear #23
22	E22	W	0h	Event Missed Clear #22
21	E21	W	0h	Event Missed Clear #21
20	E20	W	0h	Event Missed Clear #20
19	E19	W	0h	Event Missed Clear #19
18	E18	W	0h	Event Missed Clear #18
17	E17	W	0h	Event Missed Clear #17
16	E16	W	0h	Event Missed Clear #16
15	E15	W	0h	Event Missed Clear #15
14	E14	W	0h	Event Missed Clear #14
13	E13	W	0h	Event Missed Clear #13
12	E12	W	0h	Event Missed Clear #12
11	E11	W	0h	Event Missed Clear #11
10	E10	W	0h	Event Missed Clear #10
9	E9	W	0h	Event Missed Clear #9
8	E8	W	0h	Event Missed Clear #8
7	E7	W	0h	Event Missed Clear #7
6	E6	W	0h	Event Missed Clear #6

Copyright © 2025 Texas Instruments Incorporated

Table 10-41. EMCR Register Field Descriptions (continued)

Bit	Field	Type	Reset	Description
5	E5	W	0h	Event Missed Clear #5
4	E4	W	0h	Event Missed Clear #4
3	E3	W	0h	Event Missed Clear #3
2	E2	W	0h	Event Missed Clear #2
1	E1	W	0h	Event Missed Clear #1
0	E0	W	0h	Event Missed Clear #0

Copyright © 2025 Texas Instruments Incorporated

10.1.7.1.11 EMCRH Register (Offset = 30Ch) [reset = 0h]

EMCRH is shown in Figure 10-37 and described in Table 10-42.

Return to the Table 10-31.

Event Missed Clear Register (High Part): CPU write of '1' to the EMCR.En bit causes the EMR.En bit to be cleared. CPU write of '0' has no effect.. All error bits must be cleared before additional error interrupts will be asserted by CC.

Figure 10-37. EMCRH Register

31	30	29	28	27	26	25	24	23	22	21	20	19	18	17	16
E63	E62	E61	E60	E59	E58	E57	E56	E55	E54	E53	E52	E51	E50	E49	E48
W-0h	W-0h	W-0h	W-0h	W-0h	W-0h	W-0h	W-0h	W-0h	W-0h	W-0h	W-0h	W-0h	W-0h	W-0h	W-0h
15	14	13	12	11	10	9	8	7	6	5	4	3	2	1	0
E47	E46	E45	E44	E43	E42	E41	E40	E39	E38	E37	E36	E35	E34	E33	E32
W-0h	W-0h	W-0h	W-0h	W-0h	W-0h	W-0h	W-0h	W-0h	W-0h	W-0h	W-0h	W-0h	W-0h	W-0h	W-0h

Table 10-42. EMCRH Register Field Descriptions

Bit	Field	Type	Reset	Description
31	E63	W	0h	Event Missed Clear #63
30	E62	W	0h	Event Missed Clear #62
29	E61	W	0h	Event Missed Clear #61
28	E60	W	0h	Event Missed Clear #60
27	E59	W	0h	Event Missed Clear #59
26	E58	W	0h	Event Missed Clear #58
25	E57	W	0h	Event Missed Clear #57
24	E56	W	0h	Event Missed Clear #56
23	E55	W	0h	Event Missed Clear #55
22	E54	W	0h	Event Missed Clear #54
21	E53	W	0h	Event Missed Clear #53
20	E52	W	0h	Event Missed Clear #52
19	E51	W	0h	Event Missed Clear #51
18	E50	W	0h	Event Missed Clear #50
17	E49	W	0h	Event Missed Clear #49
16	E48	W	0h	Event Missed Clear #48
15	E47	W	0h	Event Missed Clear #47
14	E46	W	0h	Event Missed Clear #46
13	E45	W	0h	Event Missed Clear #45
12	E44	W	0h	Event Missed Clear #44
11	E43	W	0h	Event Missed Clear #43
10	E42	W	0h	Event Missed Clear #42
9	E41	W	0h	Event Missed Clear #41
8	E40	W	0h	Event Missed Clear #40
7	E39	W	0h	Event Missed Clear #39
6	E38	W	0h	Event Missed Clear #38

Copyright © 2025 Texas Instruments Incorporated

Table 10-42. EMCRH Register Field Descriptions (continued)

Bit	Field	Type	Reset	Description
5	E37	W	0h	Event Missed Clear #37
4	E36	W	0h	Event Missed Clear #36
3	E35	W	0h	Event Missed Clear #35
2	E34	W	0h	Event Missed Clear #34
1	E33	W	0h	Event Missed Clear #33
0	E32	W	0h	Event Missed Clear #32

Copyright © 2025 Texas Instruments Incorporated

10.1.7.1.12 QEMR Register (Offset = 310h) [reset = 0h]

QEMR is shown in Figure 10-38 and described in Table 10-43.

Return to the Table 10-31.

QDMA Event Missed Register: The QDMA Event Missed register is set if 2 QDMA events are detected without the first event being cleared or if a Null TR is serviced.. If any bit in the QEMR register is set (and all errors (including EMR/CCERR) were previously clear) then an error will be signaled with TPCC error interrupt.

Figure 10-38. QEMR Register

31	30	29	28	27	26	25	24	23	22	21	20	19	18	17	16
RES31															
R-0h															
15	14	13	12	11	10	9	8	7	6	5	4	3	2	1	0
RES31								E7	E6	E5	E4	E3	E2	E1	E0
R-0h								R-0h	R-0h	R-0h	R-0h	R-0h	R-0h	R-0h	R-0h

Table 10-43. QEMR Register Field Descriptions

Bit	Field	Type	Reset	Description
31-8	RES31	R	0h	RESERVE FIELD
7	E7	R	0h	Event Missed #7
6	E6	R	0h	Event Missed #6
5	E5	R	0h	Event Missed #5
4	E4	R	0h	Event Missed #4
3	E3	R	0h	Event Missed #3
2	E2	R	0h	Event Missed #2
1	E1	R	0h	Event Missed #1
0	E0	R	0h	Event Missed #0

Copyright © 2025 Texas Instruments Incorporated

10.1.7.1.13 QEMCR Register (Offset = 314h) [reset = 0h]

QEMCR is shown in Figure 10-39 and described in Table 10-44.

Return to the Table 10-31.

QDMA Event Missed Clear Register: CPU write of '1' to the QEMCR.En bit causes the QEMR.En bit to be cleared. CPU write of '0' has no effect.. All error bits must be cleared before additional error interrupts will be asserted by CC.

Figure 10-39. QEMCR Register

31	30	29	28	27	26	25	24	23	22	21	20	19	18	17	16
RES32															
R-0h															
15	14	13	12	11	10	9	8	7	6	5	4	3	2	1	0
RES32								E7	E6	E5	E4	E3	E2	E1	E0
R-0h								W-0h	W-0h	W-0h	W-0h	W-0h	W-0h	W-0h	W-0h

Table 10-44. QEMCR Register Field Descriptions

Bit	Field	Type	Reset	Description
31-8	RES32	R	0h	RESERVE FIELD
7	E7	W	0h	Event Missed Clear #7
6	E6	W	0h	Event Missed Clear #6
5	E5	W	0h	Event Missed Clear #5
4	E4	W	0h	Event Missed Clear #4
3	E3	W	0h	Event Missed Clear #3
2	E2	W	0h	Event Missed Clear #2
1	E1	W	0h	Event Missed Clear #1
0	E0	W	0h	Event Missed Clear #0

Copyright © 2025 Texas Instruments Incorporated

10.1.7.1.14 CCERR Register (Offset = 318h) [reset = 0h]

CCERR is shown in Figure 10-40 and described in Table 10-45.

Return to the Table 10-31.

CC Error Register

Figure 10-40. CCERR Register

31	30	29	28	27	26	25	24
RES33							
R-0h							
23	22	21	20	19	18	17	16
RES33							TCERR
R-0h							R-0h
15	14	13	12	11	10	9	8
RES34							
R-0h							
7	6	5	4	3	2	1	0
QTHRXCD7	QTHRXCD6	QTHRXCD5	QTHRXCD4	QTHRXCD3	QTHRXCD2	QTHRXCD1	QTHRXCD0
R-0h	R-0h	R-0h	R-0h	R-0h	R-0h	R-0h	R-0h

Table 10-45. CCERR Register Field Descriptions

Bit	Field	Type	Reset	Description
31-17	RES33	R	0h	RESERVE FIELD
16	TCERR	R	0h	Transfer Completion Code Error: TCCERR = 0 : Total number of allowed TCCs outstanding has not been reached. TCCERR = 1 : Total number of allowed TCCs has been reached. TCCERR can be cleared by writing a '1' to corresponding bit in CCERRCLR register. If any bit in the CCERR register is set (and all errors were previously clear) then an error will be signaled with TPCC error interrupt.
15-8	RES34	R	0h	RESERVE FIELD
7	QTHRXCD7	R	0h	Queue Threshold Error for Q7: QTHRXCD7 = 0 : Watermark/ threshold has not been exceeded. QTHRXCD7 = 1 : Watermark/ threshold has been exceeded. CCERR.QTHRXCD7 can be cleared by writing a '1' to corresponding bit in CCERRCLR register. If any bit in the CCERR register is set (and all errors (including EMR/QEMR) were previously clear) then an error will be signaled with the TPCC error interrupt.
6	QTHRXCD6	R	0h	Queue Threshold Error for Q6: QTHRXCD6 = 0 : Watermark/ threshold has not been exceeded. QTHRXCD6 = 1 : Watermark/ threshold has been exceeded. CCERR.QTHRXCD6 can be cleared by writing a '1' to corresponding bit in CCERRCLR register. If any bit in the CCERR register is set (and all errors (including EMR/QEMR) were previously clear) then an error will be signaled with the TPCC error interrupt.

Copyright © 2025 Texas Instruments Incorporated

Table 10-45. CCERR Register Field Descriptions (continued)

Bit	Field	Type	Reset	Description
5	QTHRXCD5	R	0h	Queue Threshold Error for Q5: QTHRXCD5 = 0 : Watermark/ threshold has not been exceeded. QTHRXCD5 = 1 : Watermark/ threshold has been exceeded. CCERR.QTHRXCD5 can be cleared by writing a '1' to corresponding bit in CCERRCLR register. If any bit in the CCERR register is set (and all errors (including EMR/QEMR) were previously clear) then an error will be signaled with the TPCC error interrupt.
4	QTHRXCD4	R	0h	Queue Threshold Error for Q4: QTHRXCD4 = 0 : Watermark/ threshold has not been exceeded. QTHRXCD4 = 1 : Watermark/ threshold has been exceeded. CCERR.QTHRXCD4 can be cleared by writing a '1' to corresponding bit in CCERRCLR register. If any bit in the CCERR register is set (and all errors (including EMR/QEMR) were previously clear) then an error will be signaled with the TPCC error interrupt.
3	QTHRXCD3	R	0h	Queue Threshold Error for Q3: QTHRXCD3 = 0 : Watermark/ threshold has not been exceeded. QTHRXCD3 = 1 : Watermark/ threshold has been exceeded. CCERR.QTHRXCD3 can be cleared by writing a '1' to corresponding bit in CCERRCLR register. If any bit in the CCERR register is set (and all errors (including EMR/QEMR) were previously clear) then an error will be signaled with the TPCC error interrupt.
2	QTHRXCD2	R	0h	Queue Threshold Error for Q2: QTHRXCD2 = 0 : Watermark/ threshold has not been exceeded. QTHRXCD2 = 1 : Watermark/ threshold has been exceeded. CCERR.QTHRXCD2 can be cleared by writing a '1' to corresponding bit in CCERRCLR register. If any bit in the CCERR register is set (and all errors (including EMR/QEMR) were previously clear) then an error will be signaled with the TPCC error interrupt.
1	QTHRXCD1	R	0h	Queue Threshold Error for Q1: QTHRXCD1 = 0 : Watermark/ threshold has not been exceeded. QTHRXCD1 = 1 : Watermark/ threshold has been exceeded. CCERR.QTHRXCD1 can be cleared by writing a '1' to corresponding bit in CCERRCLR register. If any bit in the CCERR register is set (and all errors (including EMR/QEMR) were previously clear) then an error will be signaled with the TPCC error interrupt.
0	QTHRXCD0	R	0h	Queue Threshold Error for Q0: QTHRXCD0 = 0 : Watermark/ threshold has not been exceeded. QTHRXCD0 = 1 : Watermark/ threshold has been exceeded. CCERR.QTHRXCD0 can be cleared by writing a '1' to corresponding bit in CCERRCLR register. If any bit in the CCERR register is set (and all errors (including EMR/QEMR) were previously clear) then an error will be signaled with the TPCC error interrupt.

Copyright © 2025 Texas Instruments Incorporated

10.1.7.1.15 CCERRCLR Register (Offset = 31Ch) [reset = 0h]

CCERRCLR is shown in Figure 10-41 and described in Table 10-46.

Return to the Table 10-31.

CC Error Clear Register

Figure 10-41. CCERRCLR Register

31	30	29	28	27	26	25	24
RES35							
R-0h							
23	22	21	20	19	18	17	16
RES35							TCERR
R-0h							W-0h
15	14	13	12	11	10	9	8
RES36							
R-0h							
7	6	5	4	3	2	1	0
QTHRXCD7	QTHRXCD6	QTHRXCD5	QTHRXCD4	QTHRXCD3	QTHRXCD2	QTHRXCD1	QTHRXCD0
W-0h	W-0h	W-0h	W-0h	W-0h	W-0h	W-0h	W-0h

Table 10-46. CCERRCLR Register Field Descriptions

Bit	Field	Type	Reset	Description
31-17	RES35	R	0h	RESERVE FIELD
16	TCERR	W	0h	Clear Error for CCERR.TCERR: Write of '1' clears the value of CCERR bit N. Writes of '0' have no affect.
15-8	RES36	R	0h	RESERVE FIELD
7	QTHRXCD7	W	0h	Clear error for CCERR.QTHRXCD7: Write of '1' clears the values of QSTAT7.WM QSTAT7.THRXCD CCERR.QTHRXCD7 Writes of '0' have no affect.
6	QTHRXCD6	W	0h	Clear error for CCERR.QTHRXCD6: Write of '1' clears the values of QSTAT6.WM QSTAT6.THRXCD CCERR.QTHRXCD6 Writes of '0' have no affect.
5	QTHRXCD5	W	0h	Clear error for CCERR.QTHRXCD5: Write of '1' clears the values of QSTAT5.WM QSTAT5.THRXCD CCERR.QTHRXCD5 Writes of '0' have no affect.
4	QTHRXCD4	W	0h	Clear error for CCERR.QTHRXCD4: Write of '1' clears the values of QSTAT4.WM QSTAT4.THRXCD CCERR.QTHRXCD4 Writes of '0' have no affect.
3	QTHRXCD3	W	0h	Clear error for CCERR.QTHRXCD3: Write of '1' clears the values of QSTAT3.WM QSTAT3.THRXCD CCERR.QTHRXCD3 Writes of '0' have no affect.
2	QTHRXCD2	W	0h	Clear error for CCERR.QTHRXCD2: Write of '1' clears the values of QSTAT2.WM QSTAT2.THRXCD CCERR.QTHRXCD2 Writes of '0' have no affect.
1	QTHRXCD1	W	0h	Clear error for CCERR.QTHRXCD1: Write of '1' clears the values of QSTAT1.WM QSTAT1.THRXCD CCERR.QTHRXCD1 Writes of '0' have no affect.

Copyright © 2025 Texas Instruments Incorporated

Table 10-46. CCERRCLR Register Field Descriptions (continued)

Bit	Field	Type	Reset	Description
0	QTHRXCD0	W	0h	Clear error for CCERR.QTHRXCD0: Write of '1' clears the values of QSTAT0.WM QSTAT0.THRXCD CCERR.QTHRXCD0 Writes of '0' have no affect.

Copyright © 2025 Texas Instruments Incorporated

10.1.7.1.16 EEVAL Register (Offset = 320h) [reset = 0h]

EEVAL is shown in Figure 10-42 and described in Table 10-47.

Return to the Table 10-31.

Error Eval Register

Figure 10-42. EEVAL Register

31	30	29	28	27	26	25	24
RES37							
R-0h							
23	22	21	20	19	18	17	16
RES37							
R-0h							
15	14	13	12	11	10	9	8
RES37							
R-0h							
7	6	5	4	3	2	1	0
RES37						SET	EVAL
R-0h						W-0h	W-0h

Table 10-47. EEVAL Register Field Descriptions

Bit	Field	Type	Reset	Description
31-2	RES37	R	0h	RESERVE FIELD
1	SET	W	0h	Error Interrupt Set: CPU write of '1' to the SET bit causes the TPCC error interrupt to be pulsed regardless of state of EMR/EMRH QEMR or CCERR. CPU write of '0' has no effect.
0	EVAL	W	0h	Error Interrupt Evaluate: CPU write of '1' to the EVAL bit causes the TPCC error interrupt to be pulsed if any errors have not been cleared in the EMR/EMRH QEMR or CCERR registers. CPU write of '0' has no effect.

Copyright © 2025 Texas Instruments Incorporated

10.1.7.1.17 DRAEM Register (Offset = 340h) [reset = 0h]

DRAEM is shown in Figure 10-43 and described in Table 10-48.

Return to the Table 10-31.

DMA Region Access enable for bit N in Region M: En = 0 : Accesses via Region M address space to Bit N in any DMA Channel Register are not allowed. Reads will return 'b0 on Bit N and writes will not modify the state of bit N. Enabled interrupt bits for bit N do not contribute to the generation of the TPCC region M interrupt. En = 1 : Accesses via Region M address space to Bit N in any DMA Channel Register are allowed. Reads will return the value from Bit N and writes will modify the state of bit N. Enabled interrupt bits for bit N do contribute to the generation of the TPCC region M interrupt.

Figure 10-43. DRAEM Register

31	30	29	28	27	26	25	24	23	22	21	20	19	18	17	16
E31	E30	E29	E28	E27	E26	E25	E24	E23	E22	E21	E20	E19	E18	E17	E16
R/W-0h	R/W-0h	R/W-0h	R/W-0h	R/W-0h	R/W-0h	R/W-0h	R/W-0h	R/W-0h	R/W-0h	R/W-0h	R/W-0h	R/W-0h	R/W-0h	R/W-0h	R/W-0h
15	14	13	12	11	10	9	8	7	6	5	4	3	2	1	0
E15	E14	E13	E12	E11	E10	E9	E8	E7	E6	E5	E4	E3	E2	E1	E0
R/W-0h	R/W-0h	R/W-0h	R/W-0h	R/W-0h	R/W-0h	R/W-0h	R/W-0h	R/W-0h	R/W-0h	R/W-0h	R/W-0h	R/W-0h	R/W-0h	R/W-0h	R/W-0h

Table 10-48. DRAEM Register Field Descriptions

Bit	Field	Type	Reset	Description
31	E31	R/W	0h	DMA Region Access enable for Region M bit #31
30	E30	R/W	0h	DMA Region Access enable for Region M bit #30
29	E29	R/W	0h	DMA Region Access enable for Region M bit #29
28	E28	R/W	0h	DMA Region Access enable for Region M bit #28
27	E27	R/W	0h	DMA Region Access enable for Region M bit #27
26	E26	R/W	0h	DMA Region Access enable for Region M bit #26
25	E25	R/W	0h	DMA Region Access enable for Region M bit #25
24	E24	R/W	0h	DMA Region Access enable for Region M bit #24
23	E23	R/W	0h	DMA Region Access enable for Region M bit #23
22	E22	R/W	0h	DMA Region Access enable for Region M bit #22
21	E21	R/W	0h	DMA Region Access enable for Region M bit #21
20	E20	R/W	0h	DMA Region Access enable for Region M bit #20
19	E19	R/W	0h	DMA Region Access enable for Region M bit #19
18	E18	R/W	0h	DMA Region Access enable for Region M bit #18
17	E17	R/W	0h	DMA Region Access enable for Region M bit #17
16	E16	R/W	0h	DMA Region Access enable for Region M bit #16
15	E15	R/W	0h	DMA Region Access enable for Region M bit #15
14	E14	R/W	0h	DMA Region Access enable for Region M bit #14
13	E13	R/W	0h	DMA Region Access enable for Region M bit #13
12	E12	R/W	0h	DMA Region Access enable for Region M bit #12
11	E11	R/W	0h	DMA Region Access enable for Region M bit #11
10	E10	R/W	0h	DMA Region Access enable for Region M bit #10
9	E9	R/W	0h	DMA Region Access enable for Region M bit #9

Copyright © 2025 Texas Instruments Incorporated

Table 10-48. DRAEM Register Field Descriptions (continued)

Bit	Field	Type	Reset	Description
8	E8	R/W	0h	DMA Region Access enable for Region M bit #8
7	E7	R/W	0h	DMA Region Access enable for Region M bit #7
6	E6	R/W	0h	DMA Region Access enable for Region M bit #6
5	E5	R/W	0h	DMA Region Access enable for Region M bit #5
4	E4	R/W	0h	DMA Region Access enable for Region M bit #4
3	E3	R/W	0h	DMA Region Access enable for Region M bit #3
2	E2	R/W	0h	DMA Region Access enable for Region M bit #2
1	E1	R/W	0h	DMA Region Access enable for Region M bit #1
0	E0	R/W	0h	DMA Region Access enable for Region M bit #0

Copyright © 2025 Texas Instruments Incorporated

10.1.7.1.18 DRAEHM Register (Offset = 344h) [reset = 0h]

DRAEHM is shown in Figure 10-44 and described in Table 10-49.

Return to the Table 10-31.

DMA Region Access enable for bit N in Region M: En = 0 : Accesses via Region M address space to Bit N in any DMA Channel Register are not allowed. Reads will return 'b0 on Bit N and writes will not modify the state of bit N. Enabled interrupt bits for bit N do not contribute to the generation of the TPCC region M interrupt. En = 1 : Accesses via Region M address space to Bit N in any DMA Channel Register are allowed. Reads will return the value from Bit N and writes will modify the state of bit N. Enabled interrupt bits for bit N do contribute to the generation of the TPCC region M interrupt. En = 0 : Accesses via Region M address space to Bit N in any DMA Channel Register are not allowed. Reads will return 'b0 on Bit N and writes will not modify the state of bit N. Enabled interrupt bits for bit N do not contribute to the generation of the TPCC region M interrupt. En = 1 : Accesses via Region M address space to Bit N in any DMA Channel Register are allowed. Reads will return the value from Bit N and writes will modify the state of bit N. Enabled interrupt bits for bit N do contribute to the generation of the TPCC region M interrupt.

Figure 10-44. DRAEHM Register

31	30	29	28	27	26	25	24	23	22	21	20	19	18	17	16
E63	E62	E61	E60	E59	E58	E57	E56	E55	E54	E53	E52	E51	E50	E49	E48
R/W-0h	R/W-0h	R/W-0h	R/W-0h	R/W-0h	R/W-0h	R/W-0h	R/W-0h	R/W-0h	R/W-0h	R/W-0h	R/W-0h	R/W-0h	R/W-0h	R/W-0h	R/W-0h
15	14	13	12	11	10	9	8	7	6	5	4	3	2	1	0
E47	E46	E45	E44	E43	E42	E41	E40	E39	E38	E37	E36	E35	E34	E33	E32
R/W-0h	R/W-0h	R/W-0h	R/W-0h	R/W-0h	R/W-0h	R/W-0h	R/W-0h	R/W-0h	R/W-0h	R/W-0h	R/W-0h	R/W-0h	R/W-0h	R/W-0h	R/W-0h

Table 10-49. DRAEHM Register Field Descriptions

Bit	Field	Type	Reset	Description
31	E63	R/W	0h	DMA Region Access enable for Region M bit #63
30	E62	R/W	0h	DMA Region Access enable for Region M bit #62
29	E61	R/W	0h	DMA Region Access enable for Region M bit #61
28	E60	R/W	0h	DMA Region Access enable for Region M bit #60
27	E59	R/W	0h	DMA Region Access enable for Region M bit #59
26	E58	R/W	0h	DMA Region Access enable for Region M bit #58
25	E57	R/W	0h	DMA Region Access enable for Region M bit #57
24	E56	R/W	0h	DMA Region Access enable for Region M bit #56
23	E55	R/W	0h	DMA Region Access enable for Region M bit #55
22	E54	R/W	0h	DMA Region Access enable for Region M bit #54
21	E53	R/W	0h	DMA Region Access enable for Region M bit #53
20	E52	R/W	0h	DMA Region Access enable for Region M bit #52
19	E51	R/W	0h	DMA Region Access enable for Region M bit #51
18	E50	R/W	0h	DMA Region Access enable for Region M bit #50
17	E49	R/W	0h	DMA Region Access enable for Region M bit #49
16	E48	R/W	0h	DMA Region Access enable for Region M bit #48
15	E47	R/W	0h	DMA Region Access enable for Region M bit #47
14	E46	R/W	0h	DMA Region Access enable for Region M bit #46
13	E45	R/W	0h	DMA Region Access enable for Region M bit #45
12	E44	R/W	0h	DMA Region Access enable for Region M bit #44

Copyright © 2025 Texas Instruments Incorporated

Table 10-49. DRAEHM Register Field Descriptions (continued)

Bit	Field	Type	Reset	Description
11	E43	R/W	0h	DMA Region Access enable for Region M bit #43
10	E42	R/W	0h	DMA Region Access enable for Region M bit #42
9	E41	R/W	0h	DMA Region Access enable for Region M bit #41
8	E40	R/W	0h	DMA Region Access enable for Region M bit #40
7	E39	R/W	0h	DMA Region Access enable for Region M bit #39
6	E38	R/W	0h	DMA Region Access enable for Region M bit #38
5	E37	R/W	0h	DMA Region Access enable for Region M bit #37
4	E36	R/W	0h	DMA Region Access enable for Region M bit #36
3	E35	R/W	0h	DMA Region Access enable for Region M bit #35
2	E34	R/W	0h	DMA Region Access enable for Region M bit #34
1	E33	R/W	0h	DMA Region Access enable for Region M bit #33
0	E32	R/W	0h	DMA Region Access enable for Region M bit #32

Copyright © 2025 Texas Instruments Incorporated

10.1.7.1.19 QRAEN Register (Offset = 380h) [reset = 0h]

QRAEN is shown in Figure 10-45 and described in Table 10-50.

Return to the Table 10-31.

QDMA Region Access enable for bit N in Region M: En = 0 : Accesses via Region M address space to Bit N in any QDMA Channel Register are not allowed. Reads will return 'b0 on Bit N and writes will not modify the state of bit N. Enabled interrupt bits for bit N do not contribute to the generation of the TPCC region M interrupt. En = 1 : Accesses via Region M address space to Bit N in any QDMA Channel Register are allowed. Reads will return the value from Bit N and writes will modify the state of bit N. Enabled interrupt bits for bit N do contribute to the generation of the TPCC region n interrupt.

Figure 10-45. QRAEN Register

31	30	29	28	27	26	25	24	23	22	21	20	19	18	17	16
RES38															
R-0h															
15	14	13	12	11	10	9	8	7	6	5	4	3	2	1	0
RES38								E7	E6	E5	E4	E3	E2	E1	E0
R-0h								R/W-0h	R/W-0h	R/W-0h	R/W-0h	R/W-0h	R/W-0h	R/W-0h	R/W-0h

Table 10-50. QRAEN Register Field Descriptions

Bit	Field	Type	Reset	Description
31-8	RES38	R	0h	RESERVE FIELD
7	E7	R/W	0h	QDMA Region Access enable for Region M bit #7
6	E6	R/W	0h	QDMA Region Access enable for Region M bit #6
5	E5	R/W	0h	QDMA Region Access enable for Region M bit #5
4	E4	R/W	0h	QDMA Region Access enable for Region M bit #4
3	E3	R/W	0h	QDMA Region Access enable for Region M bit #3
2	E2	R/W	0h	QDMA Region Access enable for Region M bit #2
1	E1	R/W	0h	QDMA Region Access enable for Region M bit #1
0	E0	R/W	0h	QDMA Region Access enable for Region M bit #0

Copyright © 2025 Texas Instruments Incorporated

10.1.7.1.20 QNE0 Register (Offset = 400h) [reset = 0h]

QNE0 is shown in Figure 10-46 and described in Table 10-51.

Return to the Table 10-31.

Event Queue Entry Diagram for Queue n - Entry 0

Figure 10-46. QNE0 Register

31	30	29	28	27	26	25	24	23	22	21	20	19	18	17	16
RES39															
R-0h															
15	14	13	12	11	10	9	8	7	6	5	4	3	2	1	0
RES39								ETYPE		ENUM					
R-0h								R-0h		R-0h					

Table 10-51. QNE0 Register Field Descriptions

Bit	Field	Type	Reset	Description
31-8	RES39	R	0h	RESERVE FIELD
7-6	ETYPE	R	0h	Event Type: Specifies the specific Event Type for the given entry in the Event Queue.
5-0	ENUM	R	0h	Event Number: Specifies the specific Event Number for the given entry in the Event Queue. For DMA Channel events (ER/ESR/CER) ENUM will range between 0 and NUM_DMACH (up to 63). For QDMA Channel events (QER) ENUM will range between 0 and NUM_QDMACH (up to 7).

Copyright © 2025 Texas Instruments Incorporated

10.1.7.1.21 QNE1 Register (Offset = 404h) [reset = 0h]

QNE1 is shown in Figure 10-47 and described in Table 10-52.

Return to the Table 10-31.

Event Queue Entry Diagram for Queue n - Entry 1

Figure 10-47. QNE1 Register

31	30	29	28	27	26	25	24	23	22	21	20	19	18	17	16
RES40															
R-0h															
15	14	13	12	11	10	9	8	7	6	5	4	3	2	1	0
RES40								ETYPE		ENUM					
R-0h								R-0h		R-0h					

Table 10-52. QNE1 Register Field Descriptions

Bit	Field	Type	Reset	Description
31-8	RES40	R	0h	RESERVE FIELD
7-6	ETYPE	R	0h	Event Type: Specifies the specific Event Type for the given entry in the Event Queue.
5-0	ENUM	R	0h	Event Number: Specifies the specific Event Number for the given entry in the Event Queue. For DMA Channel events (ER/ESR/CER) ENUM will range between 0 and NUM_DMACH (up to 63). For QDMA Channel events (QER) ENUM will range between 0 and NUM_QDMACH (up to 7).

Copyright © 2025 Texas Instruments Incorporated

10.1.7.1.22 QNE2 Register (Offset = 408h) [reset = 0h]

QNE2 is shown in Figure 10-48 and described in Table 10-53.

Return to the Table 10-31.

Event Queue Entry Diagram for Queue n - Entry 2

Figure 10-48. QNE2 Register

31	30	29	28	27	26	25	24	23	22	21	20	19	18	17	16
RES41															
R-0h															
15	14	13	12	11	10	9	8	7	6	5	4	3	2	1	0
RES41								ETYPE		ENUM					
R-0h								R-0h		R-0h					

Table 10-53. QNE2 Register Field Descriptions

Bit	Field	Type	Reset	Description
31-8	RES41	R	0h	RESERVE FIELD
7-6	ETYPE	R	0h	Event Type: Specifies the specific Event Type for the given entry in the Event Queue.
5-0	ENUM	R	0h	Event Number: Specifies the specific Event Number for the given entry in the Event Queue. For DMA Channel events (ER/ESR/CER) ENUM will range between 0 and NUM_DMACH (up to 63). For QDMA Channel events (QER) ENUM will range between 0 and NUM_QDMACH (up to 7).

Copyright © 2025 Texas Instruments Incorporated

10.1.7.1.23 QNE3 Register (Offset = 40Ch) [reset = 0h]

QNE3 is shown in Figure 10-49 and described in Table 10-54.

Return to the Table 10-31.

Event Queue Entry Diagram for Queue n - Entry 3

Figure 10-49. QNE3 Register

31	30	29	28	27	26	25	24	23	22	21	20	19	18	17	16
RES42															
R-0h															
15	14	13	12	11	10	9	8	7	6	5	4	3	2	1	0
RES42								ETYPE		ENUM					
R-0h								R-0h		R-0h					

Table 10-54. QNE3 Register Field Descriptions

Bit	Field	Type	Reset	Description
31-8	RES42	R	0h	RESERVE FIELD
7-6	ETYPE	R	0h	Event Type: Specifies the specific Event Type for the given entry in the Event Queue.
5-0	ENUM	R	0h	Event Number: Specifies the specific Event Number for the given entry in the Event Queue. For DMA Channel events (ER/ESR/CER) ENUM will range between 0 and NUM_DMACH (up to 63). For QDMA Channel events (QER) ENUM will range between 0 and NUM_QDMACH (up to 7).

Copyright © 2025 Texas Instruments Incorporated

10.1.7.1.24 QNE4 Register (Offset = 410h) [reset = 0h]

QNE4 is shown in Figure 10-50 and described in Table 10-55.

Return to the Table 10-31.

Event Queue Entry Diagram for Queue n - Entry 4

Figure 10-50. QNE4 Register

31	30	29	28	27	26	25	24	23	22	21	20	19	18	17	16
RES43															
R-0h															
15	14	13	12	11	10	9	8	7	6	5	4	3	2	1	0
RES43								ETYPE		ENUM					
R-0h								R-0h		R-0h					

Table 10-55. QNE4 Register Field Descriptions

Bit	Field	Type	Reset	Description
31-8	RES43	R	0h	RESERVE FIELD
7-6	ETYPE	R	0h	Event Type: Specifies the specific Event Type for the given entry in the Event Queue.
5-0	ENUM	R	0h	Event Number: Specifies the specific Event Number for the given entry in the Event Queue. For DMA Channel events (ER/ESR/CER) ENUM will range between 0 and NUM_DMACH (up to 63). For QDMA Channel events (QER) ENUM will range between 0 and NUM_QDMACH (up to 7).

Copyright © 2025 Texas Instruments Incorporated

10.1.7.1.25 QNE5 Register (Offset = 414h) [reset = 0h]

QNE5 is shown in Figure 10-51 and described in Table 10-56.

Return to the Table 10-31.

Event Queue Entry Diagram for Queue n - Entry 5

Figure 10-51. QNE5 Register

31	30	29	28	27	26	25	24	23	22	21	20	19	18	17	16
RES44															
R-0h															
15	14	13	12	11	10	9	8	7	6	5	4	3	2	1	0
RES44								ETYPE		ENUM					
R-0h								R-0h		R-0h					

Table 10-56. QNE5 Register Field Descriptions

Bit	Field	Type	Reset	Description
31-8	RES44	R	0h	RESERVE FIELD
7-6	ETYPE	R	0h	Event Type: Specifies the specific Event Type for the given entry in the Event Queue.
5-0	ENUM	R	0h	Event Number: Specifies the specific Event Number for the given entry in the Event Queue. For DMA Channel events (ER/ESR/CER) ENUM will range between 0 and NUM_DMACH (up to 63). For QDMA Channel events (QER) ENUM will range between 0 and NUM_QDMACH (up to 7).

Copyright © 2025 Texas Instruments Incorporated

10.1.7.1.26 QNE6 Register (Offset = 418h) [reset = 0h]

QNE6 is shown in Figure 10-52 and described in Table 10-57.

Return to the Table 10-31.

Event Queue Entry Diagram for Queue n - Entry 6

Figure 10-52. QNE6 Register

31	30	29	28	27	26	25	24	23	22	21	20	19	18	17	16
RES45															
R-0h															
15	14	13	12	11	10	9	8	7	6	5	4	3	2	1	0
RES45								ETYPE		ENUM					
R-0h								R-0h		R-0h					

Table 10-57. QNE6 Register Field Descriptions

Bit	Field	Type	Reset	Description
31-8	RES45	R	0h	RESERVE FIELD
7-6	ETYPE	R	0h	Event Type: Specifies the specific Event Type for the given entry in the Event Queue.
5-0	ENUM	R	0h	Event Number: Specifies the specific Event Number for the given entry in the Event Queue. For DMA Channel events (ER/ESR/CER) ENUM will range between 0 and NUM_DMACH (up to 63). For QDMA Channel events (QER) ENUM will range between 0 and NUM_QDMACH (up to 7).

Copyright © 2025 Texas Instruments Incorporated

10.1.7.1.27 QNE7 Register (Offset = 41Ch) [reset = 0h]

QNE7 is shown in Figure 10-53 and described in Table 10-58.

Return to the Table 10-31.

Event Queue Entry Diagram for Queue n - Entry 7

Figure 10-53. QNE7 Register

31	30	29	28	27	26	25	24	23	22	21	20	19	18	17	16
RES46															
R-0h															
15	14	13	12	11	10	9	8	7	6	5	4	3	2	1	0
RES46								ETYPE		ENUM					
R-0h								R-0h		R-0h					

Table 10-58. QNE7 Register Field Descriptions

Bit	Field	Type	Reset	Description
31-8	RES46	R	0h	RESERVE FIELD
7-6	ETYPE	R	0h	Event Type: Specifies the specific Event Type for the given entry in the Event Queue.
5-0	ENUM	R	0h	Event Number: Specifies the specific Event Number for the given entry in the Event Queue. For DMA Channel events (ER/ESR/CER) ENUM will range between 0 and NUM_DMACH (up to 63). For QDMA Channel events (QER) ENUM will range between 0 and NUM_QDMACH (up to 7).

Copyright © 2025 Texas Instruments Incorporated

10.1.7.1.28 QNE8 Register (Offset = 420h) [reset = 0h]

QNE8 is shown in Figure 10-54 and described in Table 10-59.

Return to the Table 10-31.

Event Queue Entry Diagram for Queue n - Entry 8

Figure 10-54. QNE8 Register

31	30	29	28	27	26	25	24	23	22	21	20	19	18	17	16
RES47															
R-0h															
15	14	13	12	11	10	9	8	7	6	5	4	3	2	1	0
RES47								ETYPE		ENUM					
R-0h								R-0h		R-0h					

Table 10-59. QNE8 Register Field Descriptions

Bit	Field	Type	Reset	Description
31-8	RES47	R	0h	RESERVE FIELD
7-6	ETYPE	R	0h	Event Type: Specifies the specific Event Type for the given entry in the Event Queue.
5-0	ENUM	R	0h	Event Number: Specifies the specific Event Number for the given entry in the Event Queue. For DMA Channel events (ER/ESR/CER) ENUM will range between 0 and NUM_DMACH (up to 63). For QDMA Channel events (QER) ENUM will range between 0 and NUM_QDMACH (up to 7).

Copyright © 2025 Texas Instruments Incorporated

10.1.7.1.29 QNE9 Register (Offset = 424h) [reset = 0h]

QNE9 is shown in Figure 10-55 and described in Table 10-60.

Return to the Table 10-31.

Event Queue Entry Diagram for Queue n - Entry 9

Figure 10-55. QNE9 Register

31	30	29	28	27	26	25	24	23	22	21	20	19	18	17	16
RES48															
R-0h															
15	14	13	12	11	10	9	8	7	6	5	4	3	2	1	0
RES48								ETYPE		ENUM					
R-0h								R-0h		R-0h					

Table 10-60. QNE9 Register Field Descriptions

Bit	Field	Type	Reset	Description
31-8	RES48	R	0h	RESERVE FIELD
7-6	ETYPE	R	0h	Event Type: Specifies the specific Event Type for the given entry in the Event Queue.
5-0	ENUM	R	0h	Event Number: Specifies the specific Event Number for the given entry in the Event Queue. For DMA Channel events (ER/ESR/CER) ENUM will range between 0 and NUM_DMACH (up to 63). For QDMA Channel events (QER) ENUM will range between 0 and NUM_QDMACH (up to 7).

Copyright © 2025 Texas Instruments Incorporated

10.1.7.1.30 QNE10 Register (Offset = 428h) [reset = 0h]

QNE10 is shown in Figure 10-56 and described in Table 10-61.

Return to the Table 10-31.

Event Queue Entry Diagram for Queue n - Entry 0

Figure 10-56. QNE10 Register

31	30	29	28	27	26	25	24	23	22	21	20	19	18	17	16
RES49															
R-0h															
15	14	13	12	11	10	9	8	7	6	5	4	3	2	1	0
RES49								ETYPE		ENUM					
R-0h								R-0h		R-0h					

Table 10-61. QNE10 Register Field Descriptions

Bit	Field	Type	Reset	Description
31-8	RES49	R	0h	RESERVE FIELD
7-6	ETYPE	R	0h	Event Type: Specifies the specific Event Type for the given entry in the Event Queue.
5-0	ENUM	R	0h	Event Number: Specifies the specific Event Number for the given entry in the Event Queue. For DMA Channel events (ER/ESR/CER) ENUM will range between 0 and NUM_DMACH (up to 63). For QDMA Channel events (QER) ENUM will range between 0 and NUM_QDMACH (up to 7).

Copyright © 2025 Texas Instruments Incorporated

10.1.7.1.31 QNE11 Register (Offset = 42Ch) [reset = 0h]

QNE11 is shown in Figure 10-57 and described in Table 10-62.

Return to the Table 10-31.

Event Queue Entry Diagram for Queue n - Entry 11

Figure 10-57. QNE11 Register

31	30	29	28	27	26	25	24	23	22	21	20	19	18	17	16
RES50															
R-0h															
15	14	13	12	11	10	9	8	7	6	5	4	3	2	1	0
RES50								ETYPE		ENUM					
R-0h								R-0h		R-0h					

Table 10-62. QNE11 Register Field Descriptions

Bit	Field	Type	Reset	Description
31-8	RES50	R	0h	RESERVE FIELD
7-6	ETYPE	R	0h	Event Type: Specifies the specific Event Type for the given entry in the Event Queue.
5-0	ENUM	R	0h	Event Number: Specifies the specific Event Number for the given entry in the Event Queue. For DMA Channel events (ER/ESR/CER) ENUM will range between 0 and NUM_DMACH (up to 63). For QDMA Channel events (QER) ENUM will range between 0 and NUM_QDMACH (up to 7).

Copyright © 2025 Texas Instruments Incorporated

10.1.7.1.32 QNE12 Register (Offset = 430h) [reset = 0h]

QNE12 is shown in Figure 10-58 and described in Table 10-63.

Return to the Table 10-31.

Event Queue Entry Diagram for Queue n - Entry 12

Figure 10-58. QNE12 Register

31	30	29	28	27	26	25	24	23	22	21	20	19	18	17	16
RES51															
R-0h															
15	14	13	12	11	10	9	8	7	6	5	4	3	2	1	0
RES51								ETYPE		ENUM					
R-0h								R-0h		R-0h					

Table 10-63. QNE12 Register Field Descriptions

Bit	Field	Type	Reset	Description
31-8	RES51	R	0h	RESERVE FIELD
7-6	ETYPE	R	0h	Event Type: Specifies the specific Event Type for the given entry in the Event Queue.
5-0	ENUM	R	0h	Event Number: Specifies the specific Event Number for the given entry in the Event Queue. For DMA Channel events (ER/ESR/CER) ENUM will range between 0 and NUM_DMACH (up to 63). For QDMA Channel events (QER) ENUM will range between 0 and NUM_QDMACH (up to 7).

Copyright © 2025 Texas Instruments Incorporated

10.1.7.1.33 QNE13 Register (Offset = 434h) [reset = 0h]

QNE13 is shown in Figure 10-59 and described in Table 10-64.

Return to the Table 10-31.

Event Queue Entry Diagram for Queue n - Entry 13

Figure 10-59. QNE13 Register

31	30	29	28	27	26	25	24	23	22	21	20	19	18	17	16
RES52															
R-0h															
15	14	13	12	11	10	9	8	7	6	5	4	3	2	1	0
RES52								ETYPE		ENUM					
R-0h								R-0h		R-0h					

Table 10-64. QNE13 Register Field Descriptions

Bit	Field	Type	Reset	Description
31-8	RES52	R	0h	RESERVE FIELD
7-6	ETYPE	R	0h	Event Type: Specifies the specific Event Type for the given entry in the Event Queue.
5-0	ENUM	R	0h	Event Number: Specifies the specific Event Number for the given entry in the Event Queue. For DMA Channel events (ER/ESR/CER) ENUM will range between 0 and NUM_DMACH (up to 63). For QDMA Channel events (QER) ENUM will range between 0 and NUM_QDMACH (up to 7).

Copyright © 2025 Texas Instruments Incorporated

10.1.7.1.34 QNE14 Register (Offset = 438h) [reset = 0h]

QNE14 is shown in Figure 10-60 and described in Table 10-65.

Return to the Table 10-31.

Event Queue Entry Diagram for Queue n - Entry 14

Figure 10-60. QNE14 Register

31	30	29	28	27	26	25	24	23	22	21	20	19	18	17	16
RES53															
R-0h															
15	14	13	12	11	10	9	8	7	6	5	4	3	2	1	0
RES53								ETYPE		ENUM					
R-0h								R-0h		R-0h					

Table 10-65. QNE14 Register Field Descriptions

Bit	Field	Type	Reset	Description
31-8	RES53	R	0h	RESERVE FIELD
7-6	ETYPE	R	0h	Event Type: Specifies the specific Event Type for the given entry in the Event Queue.
5-0	ENUM	R	0h	Event Number: Specifies the specific Event Number for the given entry in the Event Queue. For DMA Channel events (ER/ESR/CER) ENUM will range between 0 and NUM_DMACH (up to 63). For QDMA Channel events (QER) ENUM will range between 0 and NUM_QDMACH (up to 7).

Copyright © 2025 Texas Instruments Incorporated

10.1.7.1.35 QNE15 Register (Offset = 43Ch) [reset = 0h]

QNE15 is shown in Figure 10-61 and described in Table 10-66.

Return to the Table 10-31.

Event Queue Entry Diagram for Queue n - Entry 15

Figure 10-61. QNE15 Register

31	30	29	28	27	26	25	24	23	22	21	20	19	18	17	16
RES54															
R-0h															
15	14	13	12	11	10	9	8	7	6	5	4	3	2	1	0
RES54								ETYPE		ENUM					
R-0h								R-0h		R-0h					

Table 10-66. QNE15 Register Field Descriptions

Bit	Field	Type	Reset	Description
31-8	RES54	R	0h	RESERVE FIELD
7-6	ETYPE	R	0h	Event Type: Specifies the specific Event Type for the given entry in the Event Queue.
5-0	ENUM	R	0h	Event Number: Specifies the specific Event Number for the given entry in the Event Queue. For DMA Channel events (ER/ESR/CER) ENUM will range between 0 and NUM_DMACH (up to 63). For QDMA Channel events (QER) ENUM will range between 0 and NUM_QDMACH (up to 7).

Copyright © 2025 Texas Instruments Incorporated

10.1.7.1.36 QSTATN Register (Offset = 600h) [reset = 0h]

QSTATN is shown in Figure 10-62 and described in Table 10-67.

Return to the Table 10-31.

QSTATn Register Set

Figure 10-62. QSTATN Register

31	30	29	28	27	26	25	24
RES55							THRXCD
R-0h							R-0h
23	22	21	20	19	18	17	16
RES56			WM				
R-0h			R-0h				
15	14	13	12	11	10	9	8
RES57			NUMVAL				
R-0h			R-0h				
7	6	5	4	3	2	1	0
RES58				STRTPTR			
R-0h				R-0h			

Table 10-67. QSTATN Register Field Descriptions

Bit	Field	Type	Reset	Description
31-25	RES55	R	0h	RESERVE FIELD
24	THRXCD	R	0h	Threshold Exceeded: THRXCD = 0 : Threshold specified by QWMTHR(A B).Qn has not been exceeded. THRXCD = 1 : Threshold specified by QWMTHR(A B).Qn has been exceeded. QSTATn.THRXCD is cleared via CCERR.WMCLRn bit.
23-21	RES56	R	0h	RESERVE FIELD
20-16	WM	R	0h	Watermark for Maximum Queue Usage: Watermark tracks the most entries that have been in QueueN since reset or since the last time that the watermark (WM) was cleared. QSTATn.WM is cleared via CCERR.WMCLRn bit. Legal values = 0x0 (empty) to 0x10 (full)
15-13	RES57	R	0h	RESERVE FIELD
12-8	NUMVAL	R	0h	Number of Valid Entries in QueueN: Represents the total number of entries residing in the Queue Manager FIFO at a given instant. Always enabled. Legal values = 0x0 (empty) to 0x10 (full)
7-4	RES58	R	0h	RESERVE FIELD
3-0	STRTPTR	R	0h	Start Pointer: Represents the offset to the head entry of QueueN in units of entries. Always enabled. Legal values = 0x0 (0th entry) to 0xF (15th entry)

Copyright © 2025 Texas Instruments Incorporated

10.1.7.1.37 QWMTHRA Register (Offset = 620h) [reset = 1010h]

QWMTHRA is shown in Figure 10-63 and described in Table 10-68.

Return to the Table 10-31.

Queue Threshold A for Q[3:0]: CCERR.QTHRXCDn and QSTATn.THRXCD error bit is set when the number of Events in QueueN at an instant in time (visible via QSTATn.NUMVAL) equals or exceeds the value specified by QWMTHRA.Qn. Legal values = 0x0 (ever used?) to 0x10 (ever full?) A value of 0x11 disables threshold errors.

Figure 10-63. QWMTHRA Register

31	30	29	28	27	26	25	24	23	22	21	20	19	18	17	16
RES59															
R-0h															
15	14	13	12	11	10	9	8	7	6	5	4	3	2	1	0
RES59			Q1					RES60			Q0				
R-0h			R/W-10h					R-0h			R/W-10h				

Table 10-68. QWMTHRA Register Field Descriptions

Bit	Field	Type	Reset	Description
31-13	RES59	R	0h	RESERVE FIELD
12-8	Q1	R/W	10h	Queue Threshold for Q1 value
7-5	RES60	R	0h	RESERVE FIELD
4-0	Q0	R/W	10h	Queue Threshold for Q0 value

Copyright © 2025 Texas Instruments Incorporated

10.1.7.1.38 CCSTAT Register (Offset = 640h) [reset = 0h]

CCSTAT is shown in Figure 10-64 and described in Table 10-69.

Return to the Table 10-31.

CC Status Register

Figure 10-64. CCSTAT Register

31	30	29	28	27	26	25	24
RES61							
R-0h							
23	22	21	20	19	18	17	16
QUEACTV7	QUEACTV6	QUEACTV5	QUEACTV4	QUEACTV3	QUEACTV2	QUEACTV1	QUEACTV0
R-0h	R-0h	R-0h	R-0h	R-0h	R-0h	R-0h	R-0h
15	14	13	12	11	10	9	8
RES62		COMPACTV					
R-0h		R-0h					
7	6	5	4	3	2	1	0
RES63			ACTV	RES64	TRACTV	QEVTACTV	EVTACTV
R-0h			R-0h	R-0h	R-0h	R-0h	R-0h

Table 10-69. CCSTAT Register Field Descriptions

Bit	Field	Type	Reset	Description
31-24	RES61	R	0h	RESERVE FIELD
23	QUEACTV7	R	0h	Queue 7 Active QUEACTV7 = 0 : No Evts are queued in Q7. QUEACTV7 = 1 : At least one TR is queued in Q7.
22	QUEACTV6	R	0h	Queue 6 Active QUEACTV6 = 0 : No Evts are queued in Q6. QUEACTV6 = 1 : At least one TR is queued in Q6.
21	QUEACTV5	R	0h	Queue 5 Active QUEACTV5 = 0 : No Evts are queued in Q5. QUEACTV5 = 1 : At least one TR is queued in Q5.
20	QUEACTV4	R	0h	Queue 4 Active QUEACTV4 = 0 : No Evts are queued in Q4. QUEACTV4 = 1 : At least one TR is queued in Q4.
19	QUEACTV3	R	0h	Queue 3 Active QUEACTV3 = 0 : No Evts are queued in Q3. QUEACTV3 = 1 : At least one TR is queued in Q3.
18	QUEACTV2	R	0h	Queue 2 Active QUEACTV2 = 0 : No Evts are queued in Q2. QUEACTV2 = 1 : At least one TR is queued in Q2.
17	QUEACTV1	R	0h	Queue 1 Active QUEACTV1 = 0 : No Evts are queued in Q1. QUEACTV1 = 1 : At least one TR is queued in Q1.
16	QUEACTV0	R	0h	Queue 0 Active QUEACTV0 = 0 : No Evts are queued in Q0. QUEACTV0 = 1 : At least one TR is queued in Q0.
15-14	RES62	R	0h	RESERVE FIELD

Copyright © 2025 Texas Instruments Incorporated

Table 10-69. CCSTAT Register Field Descriptions (continued)

Bit	Field	Type	Reset	Description
13-8	COMPACTV	R	0h	Completion Request Active: Counter that tracks the total number of completion requests submitted to the TC. The counter increments when a TR is submitted with TCINTEN or TCCHEN set to '1'. The counter decrements for every valid completion code received from any of the external TCs. The CC will not service new TRs if COMPACTV count is already at the limit. COMPACTV = 0 : No completion requests outstanding. COMPACTV = 1: Total of '1' completion request outstanding. ... COMPACTV = 63 : Total of 63 completion requests are outstanding. No additional TRs will be submitted until count is less than 63.
7-5	RES63	R	0h	RESERVE FIELD
4	ACTV	R	0h	Channel Controller Active: Channel Controller Active is a logical-OR of each of the ACTV signals. The ACTV bit must remain high through the life of a TR. ACTV = 0 : Channel is idle. ACTV = 1 : Channel is busy.
3	RES64	R	0h	RESERVE FIELD
2	TRACTV	R	0h	Transfer Request Active: TRACTV = 0 : Transfer Request processing/submission logic is inactive. TRACTV = 1 : Transfer Request processing/submission logic is active.
1	QEVTACTV	R	0h	QDMA Event Active: QEVTACTV = 0 : No enabled QDMA Events are active within the CC. QEVTACTV = 1 : At least one enabled DMA Event (ER & EER ESR CER) is active within the CC.
0	EVTACTV	R	0h	DMA Event Active: EVTACTV = 0 : No enabled DMA Events are active within the CC. EVTACTV = 1 : At least one enabled DMA Event (ER & EER ESR CER) is active within the CC.

Copyright © 2025 Texas Instruments Incorporated

10.1.7.1.39 AETCTL Register (Offset = 700h) [reset = 0h]

AETCTL is shown in Figure 10-65 and described in Table 10-70.

Return to the Table 10-31.

Advanced Event Trigger Control

Figure 10-65. AETCTL Register

31	30	29	28	27	26	25	24
EN	RES65						
R/W-0h	R-0h						
23	22	21	20	19	18	17	16
RES65							
R-0h							
15	14	13	12	11	10	9	8
RES65				ENDINT			
R-0h				R/W-0h			
7	6	5	4	3	2	1	0
RES66	TYPE	STRTEVT					
R-0h	R/W-0h	R/W-0h					

Table 10-70. AETCTL Register Field Descriptions

Bit	Field	Type	Reset	Description
31	EN	R/W	0h	AET Enable: EN = 0 : AET event generation is disabled. EN = 1 : AET event generation is enabled.
30-14	RES65	R	0h	RESERVE FIELD
13-8	ENDINT	R/W	0h	AET End Interrupt: Dictates the completion interrupt number that will force the tpcc_aet signal to be deasserted (low)
7	RES66	R	0h	RESERVE FIELD
6	TYPE	R/W	0h	AET Event Type: TYPE = 0 : Event specified by STARTEVT applies to DMA Events (set by ER ESR or CER) TYPE = 1 : Event specified by STARTEVT applies to QDMA Events
5-0	STRTEVT	R/W	0h	AET Start Event: Dictates the Event Number that will force the tpcc_aet signal to be asserted (high)

Copyright © 2025 Texas Instruments Incorporated

10.1.7.1.40 AETSTAT Register (Offset = 704h) [reset = 0h]

AETSTAT is shown in Figure 10-66 and described in Table 10-71.

Return to the Table 10-31.

Advanced Event Trigger Stat

Figure 10-66. AETSTAT Register

31	30	29	28	27	26	25	24
RES67							
R-0h							
23	22	21	20	19	18	17	16
RES67							
R-0h							
15	14	13	12	11	10	9	8
RES67							
R-0h							
7	6	5	4	3	2	1	0
RES67							STAT
R-0h							R-0h

Table 10-71. AETSTAT Register Field Descriptions

Bit	Field	Type	Reset	Description
31-1	RES67	R	0h	RESERVE FIELD
0	STAT	R	0h	AET Status: AETSTAT = 0 : tpcc_aet is currently low. AETSTAT = 1 : tpcc_aet is currently high.

Copyright © 2025 Texas Instruments Incorporated

10.1.7.1.41 AETCMD Register (Offset = 708h) [reset = 0h]

AETCMD is shown in Figure 10-67 and described in Table 10-72.

Return to the Table 10-31.

AET Command

Figure 10-67. AETCMD Register

31	30	29	28	27	26	25	24	23	22	21	20	19	18	17	16
RES68															
R-0h															
15	14	13	12	11	10	9	8	7	6	5	4	3	2	1	0
RES68															CLR
R-0h															W-0h

Table 10-72. AETCMD Register Field Descriptions

Bit	Field	Type	Reset	Description
31-1	RES68	R	0h	RESERVE FIELD
0	CLR	W	0h	AET Clear command: CPU write of '1' to the CLR bit causes the tpcc_aet output signal and AETSTAT.STAT register to be cleared. CPU write of '0' has no effect..

Copyright © 2025 Texas Instruments Incorporated

10.1.7.1.42 ER Register (Offset = 1000h) [reset = 0h]

ER is shown in Figure 10-68 and described in Table 10-73.

Return to the Table 10-31.

Event Register: If ER.En bit is set and the EER.En bit is also set then the corresponding DMA channel is prioritized vs. other pending DMA events for submission to the TC. ER.En bit is set when the input event #n transitions from inactive (low) to active (high) regardless of the state of EER.En bit. ER.En bit is cleared when the corresponding event is prioritized and serviced. If the ER.En bit is already set and a new inactive to active transition is detected on the input event #n input AND the corresponding bit in the EER register is set then the corresponding bit in the Event Missed Register is set. Event N can be cleared via sw by writing a '1' to the ECR pseudo-register.

Figure 10-68. ER Register

31	30	29	28	27	26	25	24	23	22	21	20	19	18	17	16
E31	E30	E29	E28	E27	E26	E25	E24	E23	E22	E21	E20	E19	E18	E17	E16
R-0h	R-0h	R-0h	R-0h	R-0h	R-0h	R-0h	R-0h	R-0h	R-0h	R-0h	R-0h	R-0h	R-0h	R-0h	R-0h
15	14	13	12	11	10	9	8	7	6	5	4	3	2	1	0
E15	E14	E13	E12	E11	E10	E9	E8	E7	E6	E5	E4	E3	E2	E1	E0
R-0h	R-0h	R-0h	R-0h	R-0h	R-0h	R-0h	R-0h	R-0h	R-0h	R-0h	R-0h	R-0h	R-0h	R-0h	R-0h

Table 10-73. ER Register Field Descriptions

Bit	Field	Type	Reset	Description
31	E31	R	0h	Event #31
30	E30	R	0h	Event #30
29	E29	R	0h	Event #29
28	E28	R	0h	Event #28
27	E27	R	0h	Event #27
26	E26	R	0h	Event #26
25	E25	R	0h	Event #25
24	E24	R	0h	Event #24
23	E23	R	0h	Event #23
22	E22	R	0h	Event #22
21	E21	R	0h	Event #21
20	E20	R	0h	Event #20
19	E19	R	0h	Event #19
18	E18	R	0h	Event #18
17	E17	R	0h	Event #17
16	E16	R	0h	Event #16
15	E15	R	0h	Event #15
14	E14	R	0h	Event #14
13	E13	R	0h	Event #13
12	E12	R	0h	Event #12
11	E11	R	0h	Event #11
10	E10	R	0h	Event #10
9	E9	R	0h	Event #9

Copyright © 2025 Texas Instruments Incorporated

Table 10-73. ER Register Field Descriptions (continued)

Bit	Field	Type	Reset	Description
8	E8	R	0h	Event #8
7	E7	R	0h	Event #7
6	E6	R	0h	Event #6
5	E5	R	0h	Event #5
4	E4	R	0h	Event #4
3	E3	R	0h	Event #3
2	E2	R	0h	Event #2
1	E1	R	0h	Event #1
0	E0	R	0h	Event #0

Copyright © 2025 Texas Instruments Incorporated

10.1.7.1.43 ERH Register (Offset = 1004h) [reset = 0h]

ERH is shown in Figure 10-69 and described in Table 10-74.

Return to the Table 10-31.

Event Register (High Part): If ERH.En bit is set and the EERH.En bit is also set then the corresponding DMA channel is prioritized vs. other pending DMA events for submission to the TC. ERH.En bit is set when the input event #n transitions from inactive (low) to active (high) regardless of the state of EERH.En bit. ER.En bit is cleared when the corresponding event is prioritized and serviced. If the ERH.En bit is already set and a new inactive to active transition is detected on the input event #n input AND the corresponding bit in the EERH register is set then the corresponding bit in the Event Missed Register is set. Event N can be cleared via sw by writing a '1' to the ECRH pseudo-register.

Figure 10-69. ERH Register

31	30	29	28	27	26	25	24	23	22	21	20	19	18	17	16
E63	E62	E61	E60	E59	E58	E57	E56	E55	E54	E53	E52	E51	E50	E49	E48
R-0h	R-0h	R-0h	R-0h	R-0h	R-0h	R-0h	R-0h	R-0h	R-0h	R-0h	R-0h	R-0h	R-0h	R-0h	R-0h
15	14	13	12	11	10	9	8	7	6	5	4	3	2	1	0
E47	E46	E45	E44	E43	E42	E41	E40	E39	E38	E37	E36	E35	E34	E33	E32
R-0h	R-0h	R-0h	R-0h	R-0h	R-0h	R-0h	R-0h	R-0h	R-0h	R-0h	R-0h	R-0h	R-0h	R-0h	R-0h

Table 10-74. ERH Register Field Descriptions

Bit	Field	Type	Reset	Description
31	E63	R	0h	Event #63
30	E62	R	0h	Event #62
29	E61	R	0h	Event #61
28	E60	R	0h	Event #60
27	E59	R	0h	Event #59
26	E58	R	0h	Event #58
25	E57	R	0h	Event #57
24	E56	R	0h	Event #56
23	E55	R	0h	Event #55
22	E54	R	0h	Event #54
21	E53	R	0h	Event #53
20	E52	R	0h	Event #52
19	E51	R	0h	Event #51
18	E50	R	0h	Event #50
17	E49	R	0h	Event #49
16	E48	R	0h	Event #48
15	E47	R	0h	Event #47
14	E46	R	0h	Event #46
13	E45	R	0h	Event #45
12	E44	R	0h	Event #44
11	E43	R	0h	Event #43
10	E42	R	0h	Event #42
9	E41	R	0h	Event #41

Copyright © 2025 Texas Instruments Incorporated

Table 10-74. ERH Register Field Descriptions (continued)

Bit	Field	Type	Reset	Description
8	E40	R	0h	Event #40
7	E39	R	0h	Event #39
6	E38	R	0h	Event #38
5	E37	R	0h	Event #37
4	E36	R	0h	Event #36
3	E35	R	0h	Event #35
2	E34	R	0h	Event #34
1	E33	R	0h	Event #33
0	E32	R	0h	Event #32

Copyright © 2025 Texas Instruments Incorporated

10.1.7.1.44 ECR Register (Offset = 1008h) [reset = 0h]

ECR is shown in Figure 10-70 and described in Table 10-75.

Return to the Table 10-31.

Event Clear Register: CPU write of '1' to the ECR.En bit causes the ER.En bit to be cleared. CPU write of '0' has no effect.

Figure 10-70. ECR Register

31	30	29	28	27	26	25	24	23	22	21	20	19	18	17	16
E31	E30	E29	E28	E27	E26	E25	E24	E23	E22	E21	E20	E19	E18	E17	E16
W-0h	W-0h	W-0h	W-0h	W-0h	W-0h	W-0h	W-0h	W-0h	W-0h	W-0h	W-0h	W-0h	W-0h	W-0h	W-0h
15	14	13	12	11	10	9	8	7	6	5	4	3	2	1	0
E15	E14	E13	E12	E11	E10	E9	E8	E7	E6	E5	E4	E3	E2	E1	E0
W-0h	W-0h	W-0h	W-0h	W-0h	W-0h	W-0h	W-0h	W-0h	W-0h	W-0h	W-0h	W-0h	W-0h	W-0h	W-0h

Table 10-75. ECR Register Field Descriptions

Bit	Field	Type	Reset	Description
31	E31	W	0h	Event #31
30	E30	W	0h	Event #30
29	E29	W	0h	Event #29
28	E28	W	0h	Event #28
27	E27	W	0h	Event #27
26	E26	W	0h	Event #26
25	E25	W	0h	Event #25
24	E24	W	0h	Event #24
23	E23	W	0h	Event #23
22	E22	W	0h	Event #22
21	E21	W	0h	Event #21
20	E20	W	0h	Event #20
19	E19	W	0h	Event #19
18	E18	W	0h	Event #18
17	E17	W	0h	Event #17
16	E16	W	0h	Event #16
15	E15	W	0h	Event #15
14	E14	W	0h	Event #14
13	E13	W	0h	Event #13
12	E12	W	0h	Event #12
11	E11	W	0h	Event #11
10	E10	W	0h	Event #10
9	E9	W	0h	Event #9
8	E8	W	0h	Event #8
7	E7	W	0h	Event #7
6	E6	W	0h	Event #6

Copyright © 2025 Texas Instruments Incorporated

Table 10-75. ECR Register Field Descriptions (continued)

Bit	Field	Type	Reset	Description
5	E5	W	0h	Event #5
4	E4	W	0h	Event #4
3	E3	W	0h	Event #3
2	E2	W	0h	Event #2
1	E1	W	0h	Event #1
0	E0	W	0h	Event #0

Copyright © 2025 Texas Instruments Incorporated

10.1.7.1.45 ECRH Register (Offset = 100Ch) [reset = 0h]

ECRH is shown in Figure 10-71 and described in Table 10-76.

Return to the Table 10-31.

Event Clear Register (High Part): CPU write of '1' to the ECRH.En bit causes the ERH.En bit to be cleared. CPU write of '0' has no effect.

Figure 10-71. ECRH Register

31	30	29	28	27	26	25	24	23	22	21	20	19	18	17	16
E63	E62	E61	E60	E59	E58	E57	E56	E55	E54	E53	E52	E51	E50	E49	E48
W-0h	W-0h	W-0h	W-0h	W-0h	W-0h	W-0h	W-0h	W-0h	W-0h	W-0h	W-0h	W-0h	W-0h	W-0h	W-0h
15	14	13	12	11	10	9	8	7	6	5	4	3	2	1	0
E47	E46	E45	E44	E43	E42	E41	E40	E39	E38	E37	E36	E35	E34	E33	E32
W-0h	W-0h	W-0h	W-0h	W-0h	W-0h	W-0h	W-0h	W-0h	W-0h	W-0h	W-0h	W-0h	W-0h	W-0h	W-0h

Table 10-76. ECRH Register Field Descriptions

Bit	Field	Type	Reset	Description
31	E63	W	0h	Event #63
30	E62	W	0h	Event #62
29	E61	W	0h	Event #61
28	E60	W	0h	Event #60
27	E59	W	0h	Event #59
26	E58	W	0h	Event #58
25	E57	W	0h	Event #57
24	E56	W	0h	Event #56
23	E55	W	0h	Event #55
22	E54	W	0h	Event #54
21	E53	W	0h	Event #53
20	E52	W	0h	Event #52
19	E51	W	0h	Event #51
18	E50	W	0h	Event #50
17	E49	W	0h	Event #49
16	E48	W	0h	Event #48
15	E47	W	0h	Event #47
14	E46	W	0h	Event #46
13	E45	W	0h	Event #45
12	E44	W	0h	Event #44
11	E43	W	0h	Event #43
10	E42	W	0h	Event #42
9	E41	W	0h	Event #41
8	E40	W	0h	Event #40
7	E39	W	0h	Event #39
6	E38	W	0h	Event #38

Copyright © 2025 Texas Instruments Incorporated

Table 10-76. ECRH Register Field Descriptions (continued)

Bit	Field	Type	Reset	Description
5	E37	W	0h	Event #37
4	E36	W	0h	Event #36
3	E35	W	0h	Event #35
2	E34	W	0h	Event #34
1	E33	W	0h	Event #33
0	E32	W	0h	Event #32

Copyright © 2025 Texas Instruments Incorporated

10.1.7.1.46 ESR Register (Offset = 1010h) [reset = 0h]

ESR is shown in Figure 10-72 and described in Table 10-77.

Return to the Table 10-31.

Event Set Register: CPU write of '1' to the ESR.En bit causes the ER.En bit to be set. CPU write of '0' has no effect.

Figure 10-72. ESR Register

31	30	29	28	27	26	25	24	23	22	21	20	19	18	17	16
E31	E30	E29	E28	E27	E26	E25	E24	E23	E22	E21	E20	E19	E18	E17	E16
W-0h	W-0h	W-0h	W-0h	W-0h	W-0h	W-0h	W-0h	W-0h	W-0h	W-0h	W-0h	W-0h	W-0h	W-0h	W-0h
15	14	13	12	11	10	9	8	7	6	5	4	3	2	1	0
E15	E14	E13	E12	E11	E10	E9	E8	E7	E6	E5	E4	E3	E2	E1	E0
W-0h	W-0h	W-0h	W-0h	W-0h	W-0h	W-0h	W-0h	W-0h	W-0h	W-0h	W-0h	W-0h	W-0h	W-0h	W-0h

Table 10-77. ESR Register Field Descriptions

Bit	Field	Type	Reset	Description
31	E31	W	0h	Event #31
30	E30	W	0h	Event #30
29	E29	W	0h	Event #29
28	E28	W	0h	Event #28
27	E27	W	0h	Event #27
26	E26	W	0h	Event #26
25	E25	W	0h	Event #25
24	E24	W	0h	Event #24
23	E23	W	0h	Event #23
22	E22	W	0h	Event #22
21	E21	W	0h	Event #21
20	E20	W	0h	Event #20
19	E19	W	0h	Event #19
18	E18	W	0h	Event #18
17	E17	W	0h	Event #17
16	E16	W	0h	Event #16
15	E15	W	0h	Event #15
14	E14	W	0h	Event #14
13	E13	W	0h	Event #13
12	E12	W	0h	Event #12
11	E11	W	0h	Event #11
10	E10	W	0h	Event #10
9	E9	W	0h	Event #9
8	E8	W	0h	Event #8
7	E7	W	0h	Event #7
6	E6	W	0h	Event #6

Copyright © 2025 Texas Instruments Incorporated

Table 10-77. ESR Register Field Descriptions (continued)

Bit	Field	Type	Reset	Description
5	E5	W	0h	Event #5
4	E4	W	0h	Event #4
3	E3	W	0h	Event #3
2	E2	W	0h	Event #2
1	E1	W	0h	Event #1
0	E0	W	0h	Event #0

Copyright © 2025 Texas Instruments Incorporated

10.1.7.1.47 ESRH Register (Offset = 1014h) [reset = 0h]

ESRH is shown in Figure 10-73 and described in Table 10-78.

Return to the Table 10-31.

Event Set Register (High Part) CPU write of '1' to the ESRH.En bit causes the ERH.En bit to be set. CPU write of '0' has no effect.

Figure 10-73. ESRH Register

31	30	29	28	27	26	25	24	23	22	21	20	19	18	17	16
E63	E62	E61	E60	E59	E58	E57	E56	E55	E54	E53	E52	E51	E50	E49	E48
W-0h	W-0h	W-0h	W-0h	W-0h	W-0h	W-0h	W-0h	W-0h	W-0h	W-0h	W-0h	W-0h	W-0h	W-0h	W-0h
15	14	13	12	11	10	9	8	7	6	5	4	3	2	1	0
E47	E46	E45	E44	E43	E42	E41	E40	E39	E38	E37	E36	E35	E34	E33	E32
W-0h	W-0h	W-0h	W-0h	W-0h	W-0h	W-0h	W-0h	W-0h	W-0h	W-0h	W-0h	W-0h	W-0h	W-0h	W-0h

Table 10-78. ESRH Register Field Descriptions

Bit	Field	Type	Reset	Description
31	E63	W	0h	Event #63
30	E62	W	0h	Event #62
29	E61	W	0h	Event #61
28	E60	W	0h	Event #60
27	E59	W	0h	Event #59
26	E58	W	0h	Event #58
25	E57	W	0h	Event #57
24	E56	W	0h	Event #56
23	E55	W	0h	Event #55
22	E54	W	0h	Event #54
21	E53	W	0h	Event #53
20	E52	W	0h	Event #52
19	E51	W	0h	Event #51
18	E50	W	0h	Event #50
17	E49	W	0h	Event #49
16	E48	W	0h	Event #48
15	E47	W	0h	Event #47
14	E46	W	0h	Event #46
13	E45	W	0h	Event #45
12	E44	W	0h	Event #44
11	E43	W	0h	Event #43
10	E42	W	0h	Event #42
9	E41	W	0h	Event #41
8	E40	W	0h	Event #40
7	E39	W	0h	Event #39
6	E38	W	0h	Event #38

Copyright © 2025 Texas Instruments Incorporated

Table 10-78. ESRH Register Field Descriptions (continued)

Bit	Field	Type	Reset	Description
5	E37	W	0h	Event #37
4	E36	W	0h	Event #36
3	E35	W	0h	Event #35
2	E34	W	0h	Event #34
1	E33	W	0h	Event #33
0	E32	W	0h	Event #32

Copyright © 2025 Texas Instruments Incorporated

10.1.7.1.48 CER Register (Offset = 1018h) [reset = 0h]

CER is shown in Figure 10-74 and described in Table 10-79.

Return to the Table 10-31.

Chained Event Register: If CER.En bit is set (regardless of state of EER.En) then the corresponding DMA channel is prioritized vs. other pending DMA events for submission to the TC. CER.En bit is set when a chaining completion code is returned from one of the 3PTCs via the completion interface or is generated internally via Early Completion path. CER.En bit is cleared when the corresponding event is prioritized and serviced. If the CER.En bit is already set and the corresponding chaining completion code is returned from the TC then the corresponding bit in the Event Missed Register is set. CER.En cannot be set or cleared via software.

Figure 10-74. CER Register

31	30	29	28	27	26	25	24	23	22	21	20	19	18	17	16
E31	E30	E29	E28	E27	E26	E25	E24	E23	E22	E21	E20	E19	E18	E17	E16
R-0h	R-0h	R-0h	R-0h	R-0h	R-0h	R-0h	R-0h	R-0h	R-0h	R-0h	R-0h	R-0h	R-0h	R-0h	R-0h
15	14	13	12	11	10	9	8	7	6	5	4	3	2	1	0
E15	E14	E13	E12	E11	E10	E9	E8	E7	E6	E5	E4	E3	E2	E1	E0
R-0h	R-0h	R-0h	R-0h	R-0h	R-0h	R-0h	R-0h	R-0h	R-0h	R-0h	R-0h	R-0h	R-0h	R-0h	R-0h

Table 10-79. CER Register Field Descriptions

Bit	Field	Type	Reset	Description
31	E31	R	0h	Event #31
30	E30	R	0h	Event #30
29	E29	R	0h	Event #29
28	E28	R	0h	Event #28
27	E27	R	0h	Event #27
26	E26	R	0h	Event #26
25	E25	R	0h	Event #25
24	E24	R	0h	Event #24
23	E23	R	0h	Event #23
22	E22	R	0h	Event #22
21	E21	R	0h	Event #21
20	E20	R	0h	Event #20
19	E19	R	0h	Event #19
18	E18	R	0h	Event #18
17	E17	R	0h	Event #17
16	E16	R	0h	Event #16
15	E15	R	0h	Event #15
14	E14	R	0h	Event #14
13	E13	R	0h	Event #13
12	E12	R	0h	Event #12
11	E11	R	0h	Event #11
10	E10	R	0h	Event #10
9	E9	R	0h	Event #9

Copyright © 2025 Texas Instruments Incorporated

Table 10-79. CER Register Field Descriptions (continued)

Bit	Field	Type	Reset	Description
8	E8	R	0h	Event #8
7	E7	R	0h	Event #7
6	E6	R	0h	Event #6
5	E5	R	0h	Event #5
4	E4	R	0h	Event #4
3	E3	R	0h	Event #3
2	E2	R	0h	Event #2
1	E1	R	0h	Event #1
0	E0	R	0h	Event #0

Copyright © 2025 Texas Instruments Incorporated

10.1.7.1.49 CERH Register (Offset = 101Ch) [reset = 0h]

CERH is shown in Figure 10-75 and described in Table 10-80.

Return to the Table 10-31.

Chained Event Register (High Part): If CERH.En bit is set (regardless of state of EERH.En) then the corresponding DMA channel is prioritized vs. other pending DMA events for submission to the TC. CERH.En bit is set when a chaining completion code is returned from one of the 3PTCs via the completion interface or is generated internally via Early Completion path. CERH.En bit is cleared when the corresponding event is prioritized and serviced. If the CERH.En bit is already set and the corresponding chaining completion code is returned from the TC then the corresponding bit in the Event Missed Register is set. CERH.En cannot be set or cleared via software.

Figure 10-75. CERH Register

31	30	29	28	27	26	25	24	23	22	21	20	19	18	17	16
E63	E62	E61	E60	E59	E58	E57	E56	E55	E54	E53	E52	E51	E50	E49	E48
R-0h	R-0h	R-0h	R-0h	R-0h	R-0h	R-0h	R-0h	R-0h	R-0h	R-0h	R-0h	R-0h	R-0h	R-0h	R-0h
15	14	13	12	11	10	9	8	7	6	5	4	3	2	1	0
E47	E46	E45	E44	E43	E42	E41	E40	E39	E38	E37	E36	E35	E34	E33	E32
R-0h	R-0h	R-0h	R-0h	R-0h	R-0h	R-0h	R-0h	R-0h	R-0h	R-0h	R-0h	R-0h	R-0h	R-0h	R-0h

Table 10-80. CERH Register Field Descriptions

Bit	Field	Type	Reset	Description
31	E63	R	0h	Event #63
30	E62	R	0h	Event #62
29	E61	R	0h	Event #61
28	E60	R	0h	Event #60
27	E59	R	0h	Event #59
26	E58	R	0h	Event #58
25	E57	R	0h	Event #57
24	E56	R	0h	Event #56
23	E55	R	0h	Event #55
22	E54	R	0h	Event #54
21	E53	R	0h	Event #53
20	E52	R	0h	Event #52
19	E51	R	0h	Event #51
18	E50	R	0h	Event #50
17	E49	R	0h	Event #49
16	E48	R	0h	Event #48
15	E47	R	0h	Event #47
14	E46	R	0h	Event #46
13	E45	R	0h	Event #45
12	E44	R	0h	Event #44
11	E43	R	0h	Event #43
10	E42	R	0h	Event #42
9	E41	R	0h	Event #41

Copyright © 2025 Texas Instruments Incorporated

Table 10-80. CERH Register Field Descriptions (continued)

Bit	Field	Type	Reset	Description
8	E40	R	0h	Event #40
7	E39	R	0h	Event #39
6	E38	R	0h	Event #38
5	E37	R	0h	Event #37
4	E36	R	0h	Event #36
3	E35	R	0h	Event #35
2	E34	R	0h	Event #34
1	E33	R	0h	Event #33
0	E32	R	0h	Event #32

Copyright © 2025 Texas Instruments Incorporated

10.1.7.1.50 EER Register (Offset = 1020h) [reset = 0h]

EER is shown in Figure 10-76 and described in Table 10-81.

Return to the Table 10-31.

Event Enable Register: Enables DMA transfers for ER.En pending events. ER.En is set based on externally asserted events (via tpcc_eventN_pi). This register has no effect on Chained Event Register (CER) or Event Set Register (ESR). Note that if a bit is set in ER.En while EER.En is disabled no action is taken. If EER.En is enabled at a later point (and ER.En has not been cleared via SW) then the event will be recognized as a valid 'TR Sync' EER.En is not directly writeable. Events can be enabled via writes to EESR and can be disabled via writes to EECR register. EER.En = 0: ER.En is not enabled to trigger DMA transfers. EER.En = 1: ER.En is enabled to trigger DMA transfers.

Figure 10-76. EER Register

31	30	29	28	27	26	25	24	23	22	21	20	19	18	17	16
E31	E30	E29	E28	E27	E26	E25	E24	E23	E22	E21	E20	E19	E18	E17	E16
R-0h	R-0h	R-0h	R-0h	R-0h	R-0h	R-0h	R-0h	R-0h	R-0h	R-0h	R-0h	R-0h	R-0h	R-0h	R-0h
15	14	13	12	11	10	9	8	7	6	5	4	3	2	1	0
E15	E14	E13	E12	E11	E10	E9	E8	E7	E6	E5	E4	E3	E2	E1	E0
R-0h	R-0h	R-0h	R-0h	R-0h	R-0h	R-0h	R-0h	R-0h	R-0h	R-0h	R-0h	R-0h	R-0h	R-0h	R-0h

Table 10-81. EER Register Field Descriptions

Bit	Field	Type	Reset	Description
31	E31	R	0h	Event #31
30	E30	R	0h	Event #30
29	E29	R	0h	Event #29
28	E28	R	0h	Event #28
27	E27	R	0h	Event #27
26	E26	R	0h	Event #26
25	E25	R	0h	Event #25
24	E24	R	0h	Event #24
23	E23	R	0h	Event #23
22	E22	R	0h	Event #22
21	E21	R	0h	Event #21
20	E20	R	0h	Event #20
19	E19	R	0h	Event #19
18	E18	R	0h	Event #18
17	E17	R	0h	Event #17
16	E16	R	0h	Event #16
15	E15	R	0h	Event #15
14	E14	R	0h	Event #14
13	E13	R	0h	Event #13
12	E12	R	0h	Event #12
11	E11	R	0h	Event #11
10	E10	R	0h	Event #10
9	E9	R	0h	Event #9

Copyright © 2025 Texas Instruments Incorporated

Table 10-81. EER Register Field Descriptions (continued)

Bit	Field	Type	Reset	Description
8	E8	R	0h	Event #8
7	E7	R	0h	Event #7
6	E6	R	0h	Event #6
5	E5	R	0h	Event #5
4	E4	R	0h	Event #4
3	E3	R	0h	Event #3
2	E2	R	0h	Event #2
1	E1	R	0h	Event #1
0	E0	R	0h	Event #0

Copyright © 2025 Texas Instruments Incorporated

10.1.7.1.51 EERH Register (Offset = 1024h) [reset = 0h]

EERH is shown in Figure 10-77 and described in Table 10-82.

Return to the Table 10-31.

Event Enable Register (High Part): Enables DMA transfers for ERH.En pending events. ERH.En is set based on externally asserted events (via tpcc_eventN_pi). This register has no effect on Chained Event Register (CERH) or Event Set Register (ESRH). Note that if a bit is set in ERH.En while EERH.En is disabled no action is taken. If EERH.En is enabled at a later point (and ERH.En has not been cleared via SW) then the event will be recognized as a valid 'TR Sync' EERH.En is not directly writeable. Events can be enabled via writes to EESRH and can be disabled via writes to EECRH register. EERH.En = 0: ER.En is not enabled to trigger DMA transfers. EERH.En = 1: ER.En is enabled to trigger DMA transfers.

Figure 10-77. EERH Register

31	30	29	28	27	26	25	24	23	22	21	20	19	18	17	16
E63	E62	E61	E60	E59	E58	E57	E56	E55	E54	E53	E52	E51	E50	E49	E48
R-0h	R-0h	R-0h	R-0h	R-0h	R-0h	R-0h	R-0h	R-0h	R-0h	R-0h	R-0h	R-0h	R-0h	R-0h	R-0h
15	14	13	12	11	10	9	8	7	6	5	4	3	2	1	0
E47	E46	E45	E44	E43	E42	E41	E40	E39	E38	E37	E36	E35	E34	E33	E32
R-0h	R-0h	R-0h	R-0h	R-0h	R-0h	R-0h	R-0h	R-0h	R-0h	R-0h	R-0h	R-0h	R-0h	R-0h	R-0h

Table 10-82. EERH Register Field Descriptions

Bit	Field	Type	Reset	Description
31	E63	R	0h	Event #63
30	E62	R	0h	Event #62
29	E61	R	0h	Event #61
28	E60	R	0h	Event #60
27	E59	R	0h	Event #59
26	E58	R	0h	Event #58
25	E57	R	0h	Event #57
24	E56	R	0h	Event #56
23	E55	R	0h	Event #55
22	E54	R	0h	Event #54
21	E53	R	0h	Event #53
20	E52	R	0h	Event #52
19	E51	R	0h	Event #51
18	E50	R	0h	Event #50
17	E49	R	0h	Event #49
16	E48	R	0h	Event #48
15	E47	R	0h	Event #47
14	E46	R	0h	Event #46
13	E45	R	0h	Event #45
12	E44	R	0h	Event #44
11	E43	R	0h	Event #43
10	E42	R	0h	Event #42
9	E41	R	0h	Event #41

Copyright © 2025 Texas Instruments Incorporated

Table 10-82. EERH Register Field Descriptions (continued)

Bit	Field	Type	Reset	Description
8	E40	R	0h	Event #40
7	E39	R	0h	Event #39
6	E38	R	0h	Event #38
5	E37	R	0h	Event #37
4	E36	R	0h	Event #36
3	E35	R	0h	Event #35
2	E34	R	0h	Event #34
1	E33	R	0h	Event #33
0	E32	R	0h	Event #32

Copyright © 2025 Texas Instruments Incorporated

10.1.7.1.52 EECR Register (Offset = 1028h) [reset = 0h]

EECR is shown in Figure 10-78 and described in Table 10-83.

Return to the Table 10-31.

Event Enable Clear Register: CPU write of '1' to the EECR.En bit causes the EER.En bit to be cleared. CPU write of '0' has no effect..

Figure 10-78. EECR Register

31	30	29	28	27	26	25	24	23	22	21	20	19	18	17	16
E31	E30	E29	E28	E27	E26	E25	E24	E23	E22	E21	E20	E19	E18	E17	E16
W-0h	W-0h	W-0h	W-0h	W-0h	W-0h	W-0h	W-0h	W-0h	W-0h	W-0h	W-0h	W-0h	W-0h	W-0h	W-0h
15	14	13	12	11	10	9	8	7	6	5	4	3	2	1	0
E15	E14	E13	E12	E11	E10	E9	E8	E7	E6	E5	E4	E3	E2	E1	E0
W-0h	W-0h	W-0h	W-0h	W-0h	W-0h	W-0h	W-0h	W-0h	W-0h	W-0h	W-0h	W-0h	W-0h	W-0h	W-0h

Table 10-83. EECR Register Field Descriptions

Bit	Field	Type	Reset	Description
31	E31	W	0h	Event #31
30	E30	W	0h	Event #30
29	E29	W	0h	Event #29
28	E28	W	0h	Event #28
27	E27	W	0h	Event #27
26	E26	W	0h	Event #26
25	E25	W	0h	Event #25
24	E24	W	0h	Event #24
23	E23	W	0h	Event #23
22	E22	W	0h	Event #22
21	E21	W	0h	Event #21
20	E20	W	0h	Event #20
19	E19	W	0h	Event #19
18	E18	W	0h	Event #18
17	E17	W	0h	Event #17
16	E16	W	0h	Event #16
15	E15	W	0h	Event #15
14	E14	W	0h	Event #14
13	E13	W	0h	Event #13
12	E12	W	0h	Event #12
11	E11	W	0h	Event #11
10	E10	W	0h	Event #10
9	E9	W	0h	Event #9
8	E8	W	0h	Event #8
7	E7	W	0h	Event #7
6	E6	W	0h	Event #6

Copyright © 2025 Texas Instruments Incorporated

Table 10-83. EECR Register Field Descriptions (continued)

Bit	Field	Type	Reset	Description
5	E5	W	0h	Event #5
4	E4	W	0h	Event #4
3	E3	W	0h	Event #3
2	E2	W	0h	Event #2
1	E1	W	0h	Event #1
0	E0	W	0h	Event #0

Copyright © 2025 Texas Instruments Incorporated

10.1.7.1.53 EECRH Register (Offset = 102Ch) [reset = 0h]

EECRH is shown in Figure 10-79 and described in Table 10-84.

Return to the Table 10-31.

Event Enable Clear Register (High Part): CPU write of '1' to the EECRH.En bit causes the EERH.En bit to be cleared. CPU write of '0' has no effect..

Figure 10-79. EECRH Register

31	30	29	28	27	26	25	24	23	22	21	20	19	18	17	16
E63	E62	E61	E60	E59	E58	E57	E56	E55	E54	E53	E52	E51	E50	E49	E48
W-0h	W-0h	W-0h	W-0h	W-0h	W-0h	W-0h	W-0h	W-0h	W-0h	W-0h	W-0h	W-0h	W-0h	W-0h	W-0h
15	14	13	12	11	10	9	8	7	6	5	4	3	2	1	0
E47	E46	E45	E44	E43	E42	E41	E40	E39	E38	E37	E36	E35	E34	E33	E32
W-0h	W-0h	W-0h	W-0h	W-0h	W-0h	W-0h	W-0h	W-0h	W-0h	W-0h	W-0h	W-0h	W-0h	W-0h	W-0h

Table 10-84. EECRH Register Field Descriptions

Bit	Field	Type	Reset	Description
31	E63	W	0h	Event #63
30	E62	W	0h	Event #62
29	E61	W	0h	Event #61
28	E60	W	0h	Event #60
27	E59	W	0h	Event #59
26	E58	W	0h	Event #58
25	E57	W	0h	Event #57
24	E56	W	0h	Event #56
23	E55	W	0h	Event #55
22	E54	W	0h	Event #54
21	E53	W	0h	Event #53
20	E52	W	0h	Event #52
19	E51	W	0h	Event #51
18	E50	W	0h	Event #50
17	E49	W	0h	Event #49
16	E48	W	0h	Event #48
15	E47	W	0h	Event #47
14	E46	W	0h	Event #46
13	E45	W	0h	Event #45
12	E44	W	0h	Event #44
11	E43	W	0h	Event #43
10	E42	W	0h	Event #42
9	E41	W	0h	Event #41
8	E40	W	0h	Event #40
7	E39	W	0h	Event #39
6	E38	W	0h	Event #38

Copyright © 2025 Texas Instruments Incorporated

Table 10-84. EECRH Register Field Descriptions (continued)

Bit	Field	Type	Reset	Description
5	E37	W	0h	Event #37
4	E36	W	0h	Event #36
3	E35	W	0h	Event #35
2	E34	W	0h	Event #34
1	E33	W	0h	Event #33
0	E32	W	0h	Event #32

Copyright © 2025 Texas Instruments Incorporated

10.1.7.1.54 EESR Register (Offset = 1030h) [reset = 0h]

EESR is shown in Figure 10-80 and described in Table 10-85.

Return to the Table 10-31.

Event Enable Set Register: CPU write of '1' to the EESR.En bit causes the EER.En bit to be set. CPU write of '0' has no effect..

Figure 10-80. EESR Register

31	30	29	28	27	26	25	24	23	22	21	20	19	18	17	16
E31	E30	E29	E28	E27	E26	E25	E24	E23	E22	E21	E20	E19	E18	E17	E16
W-0h	W-0h	W-0h	W-0h	W-0h	W-0h	W-0h	W-0h	W-0h	W-0h	W-0h	W-0h	W-0h	W-0h	W-0h	W-0h
15	14	13	12	11	10	9	8	7	6	5	4	3	2	1	0
E15	E14	E13	E12	E11	E10	E9	E8	E7	E6	E5	E4	E3	E2	E1	E0
W-0h	W-0h	W-0h	W-0h	W-0h	W-0h	W-0h	W-0h	W-0h	W-0h	W-0h	W-0h	W-0h	W-0h	W-0h	W-0h

Table 10-85. EESR Register Field Descriptions

Bit	Field	Type	Reset	Description
31	E31	W	0h	Event #31
30	E30	W	0h	Event #30
29	E29	W	0h	Event #29
28	E28	W	0h	Event #28
27	E27	W	0h	Event #27
26	E26	W	0h	Event #26
25	E25	W	0h	Event #25
24	E24	W	0h	Event #24
23	E23	W	0h	Event #23
22	E22	W	0h	Event #22
21	E21	W	0h	Event #21
20	E20	W	0h	Event #20
19	E19	W	0h	Event #19
18	E18	W	0h	Event #18
17	E17	W	0h	Event #17
16	E16	W	0h	Event #16
15	E15	W	0h	Event #15
14	E14	W	0h	Event #14
13	E13	W	0h	Event #13
12	E12	W	0h	Event #12
11	E11	W	0h	Event #11
10	E10	W	0h	Event #10
9	E9	W	0h	Event #9
8	E8	W	0h	Event #8
7	E7	W	0h	Event #7
6	E6	W	0h	Event #6

Copyright © 2025 Texas Instruments Incorporated

Table 10-85. EESR Register Field Descriptions (continued)

Bit	Field	Type	Reset	Description
5	E5	W	0h	Event #5
4	E4	W	0h	Event #4
3	E3	W	0h	Event #3
2	E2	W	0h	Event #2
1	E1	W	0h	Event #1
0	E0	W	0h	Event #0

Copyright © 2025 Texas Instruments Incorporated

10.1.7.1.55 EESRH Register (Offset = 1034h) [reset = 0h]

EESRH is shown in Figure 10-81 and described in Table 10-86.

Return to the Table 10-31.

Event Enable Set Register (High Part): CPU write of '1' to the EESRH.En bit causes the EERH.En bit to be set. CPU write of '0' has no effect..

Figure 10-81. EESRH Register

31	30	29	28	27	26	25	24	23	22	21	20	19	18	17	16
E63	E62	E61	E60	E59	E58	E57	E56	E55	E54	E53	E52	E51	E50	E49	E48
W-0h	W-0h	W-0h	W-0h	W-0h	W-0h	W-0h	W-0h	W-0h	W-0h	W-0h	W-0h	W-0h	W-0h	W-0h	W-0h
15	14	13	12	11	10	9	8	7	6	5	4	3	2	1	0
E47	E46	E45	E44	E43	E42	E41	E40	E39	E38	E37	E36	E35	E34	E33	E32
W-0h	W-0h	W-0h	W-0h	W-0h	W-0h	W-0h	W-0h	W-0h	W-0h	W-0h	W-0h	W-0h	W-0h	W-0h	W-0h

Table 10-86. EESRH Register Field Descriptions

Bit	Field	Type	Reset	Description
31	E63	W	0h	Event #63
30	E62	W	0h	Event #62
29	E61	W	0h	Event #61
28	E60	W	0h	Event #60
27	E59	W	0h	Event #59
26	E58	W	0h	Event #58
25	E57	W	0h	Event #57
24	E56	W	0h	Event #56
23	E55	W	0h	Event #55
22	E54	W	0h	Event #54
21	E53	W	0h	Event #53
20	E52	W	0h	Event #52
19	E51	W	0h	Event #51
18	E50	W	0h	Event #50
17	E49	W	0h	Event #49
16	E48	W	0h	Event #48
15	E47	W	0h	Event #47
14	E46	W	0h	Event #46
13	E45	W	0h	Event #45
12	E44	W	0h	Event #44
11	E43	W	0h	Event #43
10	E42	W	0h	Event #42
9	E41	W	0h	Event #41
8	E40	W	0h	Event #40
7	E39	W	0h	Event #39
6	E38	W	0h	Event #38

Copyright © 2025 Texas Instruments Incorporated

Table 10-86. EESRH Register Field Descriptions (continued)

Bit	Field	Type	Reset	Description
5	E37	W	0h	Event #37
4	E36	W	0h	Event #36
3	E35	W	0h	Event #35
2	E34	W	0h	Event #34
1	E33	W	0h	Event #33
0	E32	W	0h	Event #32

Copyright © 2025 Texas Instruments Incorporated

10.1.7.1.56 SER Register (Offset = 1038h) [reset = 0h]

SER is shown in Figure 10-82 and described in Table 10-87.

Return to the Table 10-31.

Secondary Event Register: The secondary event register is used along with the Event Register (ER) to provide information on the state of an Event. En = 0 : Event is not currently in the Event Queue. En = 1 : Event is currently stored in Event Queue. Event arbiter will not prioritize additional events.

Figure 10-82. SER Register

31	30	29	28	27	26	25	24	23	22	21	20	19	18	17	16
E31	E30	E29	E28	E27	E26	E25	E24	E23	E22	E21	E20	E19	E18	E17	E16
R-0h	R-0h	R-0h	R-0h	R-0h	R-0h	R-0h	R-0h	R-0h	R-0h	R-0h	R-0h	R-0h	R-0h	R-0h	R-0h
15	14	13	12	11	10	9	8	7	6	5	4	3	2	1	0
E15	E14	E13	E12	E11	E10	E9	E8	E7	E6	E5	E4	E3	E2	E1	E0
R-0h	R-0h	R-0h	R-0h	R-0h	R-0h	R-0h	R-0h	R-0h	R-0h	R-0h	R-0h	R-0h	R-0h	R-0h	R-0h

Table 10-87. SER Register Field Descriptions

Bit	Field	Type	Reset	Description
31	E31	R	0h	Event #31
30	E30	R	0h	Event #30
29	E29	R	0h	Event #29
28	E28	R	0h	Event #28
27	E27	R	0h	Event #27
26	E26	R	0h	Event #26
25	E25	R	0h	Event #25
24	E24	R	0h	Event #24
23	E23	R	0h	Event #23
22	E22	R	0h	Event #22
21	E21	R	0h	Event #21
20	E20	R	0h	Event #20
19	E19	R	0h	Event #19
18	E18	R	0h	Event #18
17	E17	R	0h	Event #17
16	E16	R	0h	Event #16
15	E15	R	0h	Event #15
14	E14	R	0h	Event #14
13	E13	R	0h	Event #13
12	E12	R	0h	Event #12
11	E11	R	0h	Event #11
10	E10	R	0h	Event #10
9	E9	R	0h	Event #9
8	E8	R	0h	Event #8
7	E7	R	0h	Event #7
6	E6	R	0h	Event #6

Copyright © 2025 Texas Instruments Incorporated

Table 10-87. SER Register Field Descriptions (continued)

Bit	Field	Type	Reset	Description
5	E5	R	0h	Event #5
4	E4	R	0h	Event #4
3	E3	R	0h	Event #3
2	E2	R	0h	Event #2
1	E1	R	0h	Event #1
0	E0	R	0h	Event #0

Copyright © 2025 Texas Instruments Incorporated

10.1.7.1.57 SERH Register (Offset = 103Ch) [reset = 0h]

SERH is shown in Figure 10-83 and described in Table 10-88.

Return to the Table 10-31.

Secondary Event Register (High Part): The secondary event register is used along with the Event Register (ERH) to provide information on the state of an Event. En = 0 : Event is not currently in the Event Queue. En = 1 : Event is currently stored in Event Queue. Event arbiter will not prioritize additional events.

Figure 10-83. SERH Register

31	30	29	28	27	26	25	24	23	22	21	20	19	18	17	16
E63	E62	E61	E60	E59	E58	E57	E56	E55	E54	E53	E52	E51	E50	E49	E48
R-0h	R-0h	R-0h	R-0h	R-0h	R-0h	R-0h	R-0h	R-0h	R-0h	R-0h	R-0h	R-0h	R-0h	R-0h	R-0h
15	14	13	12	11	10	9	8	7	6	5	4	3	2	1	0
E47	E46	E45	E44	E43	E42	E41	E40	E39	E38	E37	E36	E35	E34	E33	E32
R-0h	R-0h	R-0h	R-0h	R-0h	R-0h	R-0h	R-0h	R-0h	R-0h	R-0h	R-0h	R-0h	R-0h	R-0h	R-0h

Table 10-88. SERH Register Field Descriptions

Bit	Field	Type	Reset	Description
31	E63	R	0h	Event #63
30	E62	R	0h	Event #62
29	E61	R	0h	Event #61
28	E60	R	0h	Event #60
27	E59	R	0h	Event #59
26	E58	R	0h	Event #58
25	E57	R	0h	Event #57
24	E56	R	0h	Event #56
23	E55	R	0h	Event #55
22	E54	R	0h	Event #54
21	E53	R	0h	Event #53
20	E52	R	0h	Event #52
19	E51	R	0h	Event #51
18	E50	R	0h	Event #50
17	E49	R	0h	Event #49
16	E48	R	0h	Event #48
15	E47	R	0h	Event #47
14	E46	R	0h	Event #46
13	E45	R	0h	Event #45
12	E44	R	0h	Event #44
11	E43	R	0h	Event #43
10	E42	R	0h	Event #42
9	E41	R	0h	Event #41
8	E40	R	0h	Event #40
7	E39	R	0h	Event #39
6	E38	R	0h	Event #38

Copyright © 2025 Texas Instruments Incorporated

Table 10-88. SERH Register Field Descriptions (continued)

Bit	Field	Type	Reset	Description
5	E37	R	0h	Event #37
4	E36	R	0h	Event #36
3	E35	R	0h	Event #35
2	E34	R	0h	Event #34
1	E33	R	0h	Event #33
0	E32	R	0h	Event #32

Copyright © 2025 Texas Instruments Incorporated

10.1.7.1.58 SECR Register (Offset = 1040h) [reset = 0h]

SECR is shown in Figure 10-84 and described in Table 10-89.

Return to the Table 10-31.

Secondary Event Clear Register: The secondary event clear register is used to clear the status of the SER registers. CPU write of '1' to the SECR.En bit clears the SER register. CPU write of '0' has no effect.

Figure 10-84. SECR Register

31	30	29	28	27	26	25	24	23	22	21	20	19	18	17	16
E31	E30	E29	E28	E27	E26	E25	E24	E23	E22	E21	E20	E19	E18	E17	E16
W-0h	W-0h	W-0h	W-0h	W-0h	W-0h	W-0h	W-0h	W-0h	W-0h	W-0h	W-0h	W-0h	W-0h	W-0h	W-0h
15	14	13	12	11	10	9	8	7	6	5	4	3	2	1	0
E15	E14	E13	E12	E11	E10	E9	E8	E7	E6	E5	E4	E3	E2	E1	E0
W-0h	W-0h	W-0h	W-0h	W-0h	W-0h	W-0h	W-0h	W-0h	W-0h	W-0h	W-0h	W-0h	W-0h	W-0h	W-0h

Table 10-89. SECR Register Field Descriptions

Bit	Field	Type	Reset	Description
31	E31	W	0h	Event #31
30	E30	W	0h	Event #30
29	E29	W	0h	Event #29
28	E28	W	0h	Event #28
27	E27	W	0h	Event #27
26	E26	W	0h	Event #26
25	E25	W	0h	Event #25
24	E24	W	0h	Event #24
23	E23	W	0h	Event #23
22	E22	W	0h	Event #22
21	E21	W	0h	Event #21
20	E20	W	0h	Event #20
19	E19	W	0h	Event #19
18	E18	W	0h	Event #18
17	E17	W	0h	Event #17
16	E16	W	0h	Event #16
15	E15	W	0h	Event #15
14	E14	W	0h	Event #14
13	E13	W	0h	Event #13
12	E12	W	0h	Event #12
11	E11	W	0h	Event #11
10	E10	W	0h	Event #10
9	E9	W	0h	Event #9
8	E8	W	0h	Event #8
7	E7	W	0h	Event #7
6	E6	W	0h	Event #6

Copyright © 2025 Texas Instruments Incorporated

Table 10-89. SECR Register Field Descriptions (continued)

Bit	Field	Type	Reset	Description
5	E5	W	0h	Event #5
4	E4	W	0h	Event #4
3	E3	W	0h	Event #3
2	E2	W	0h	Event #2
1	E1	W	0h	Event #1
0	E0	W	0h	Event #0

Copyright © 2025 Texas Instruments Incorporated

10.1.7.1.59 SECRH Register (Offset = 1044h) [reset = 0h]

SECRH is shown in Figure 10-85 and described in Table 10-90.

Return to the Table 10-31.

Secondary Event Clear Register (High Part): The secondary event clear register is used to clear the status of the SERH registers. CPU write of '1' to the SECRH.En bit clears the SERH register. CPU write of '0' has no effect.

Figure 10-85. SECRH Register

31	30	29	28	27	26	25	24	23	22	21	20	19	18	17	16
E63	E62	E61	E60	E59	E58	E57	E56	E55	E54	E53	E52	E51	E50	E49	E48
W-0h	W-0h	W-0h	W-0h	W-0h	W-0h	W-0h	W-0h	W-0h	W-0h	W-0h	W-0h	W-0h	W-0h	W-0h	W-0h
15	14	13	12	11	10	9	8	7	6	5	4	3	2	1	0
E47	E46	E45	E44	E43	E42	E41	E40	E39	E38	E37	E36	E35	E34	E33	E32
W-0h	W-0h	W-0h	W-0h	W-0h	W-0h	W-0h	W-0h	W-0h	W-0h	W-0h	W-0h	W-0h	W-0h	W-0h	W-0h

Table 10-90. SECRH Register Field Descriptions

Bit	Field	Type	Reset	Description
31	E63	W	0h	Event #63
30	E62	W	0h	Event #62
29	E61	W	0h	Event #61
28	E60	W	0h	Event #60
27	E59	W	0h	Event #59
26	E58	W	0h	Event #58
25	E57	W	0h	Event #57
24	E56	W	0h	Event #56
23	E55	W	0h	Event #55
22	E54	W	0h	Event #54
21	E53	W	0h	Event #53
20	E52	W	0h	Event #52
19	E51	W	0h	Event #51
18	E50	W	0h	Event #50
17	E49	W	0h	Event #49
16	E48	W	0h	Event #48
15	E47	W	0h	Event #47
14	E46	W	0h	Event #46
13	E45	W	0h	Event #45
12	E44	W	0h	Event #44
11	E43	W	0h	Event #43
10	E42	W	0h	Event #42
9	E41	W	0h	Event #41
8	E40	W	0h	Event #40
7	E39	W	0h	Event #39
6	E38	W	0h	Event #38

Copyright © 2025 Texas Instruments Incorporated

Table 10-90. SECRH Register Field Descriptions (continued)

Bit	Field	Type	Reset	Description
5	E37	W	0h	Event #37
4	E36	W	0h	Event #36
3	E35	W	0h	Event #35
2	E34	W	0h	Event #34
1	E33	W	0h	Event #33
0	E32	W	0h	Event #32

Copyright © 2025 Texas Instruments Incorporated

10.1.7.1.60 IER Register (Offset = 1050h) [reset = 0h]

IER is shown in Figure 10-86 and described in Table 10-91.

Return to the Table 10-31.

Int Enable Register: IER.In is not directly writeable. Interrupts can be enabled via writes to IESR and can be disabled via writes to IECR register. IER.In = 0: IPR.In is NOT enabled for interrupts. IER.In = 1: IPR.In IS enabled for interrupts.

Figure 10-86. IER Register

31	30	29	28	27	26	25	24	23	22	21	20	19	18	17	16
I31	I30	I29	I28	I27	I26	I25	I24	I23	I22	I21	I20	I19	I18	I17	I16
R-0h	R-0h	R-0h	R-0h	R-0h	R-0h	R-0h	R-0h	R-0h	R-0h	R-0h	R-0h	R-0h	R-0h	R-0h	R-0h
15	14	13	12	11	10	9	8	7	6	5	4	3	2	1	0
I15	I14	I13	I12	I11	I10	I9	I8	I7	I6	I5	I4	I3	I2	I1	I0
R-0h	R-0h	R-0h	R-0h	R-0h	R-0h	R-0h	R-0h	R-0h	R-0h	R-0h	R-0h	R-0h	R-0h	R-0h	R-0h

Table 10-91. IER Register Field Descriptions

Bit	Field	Type	Reset	Description
31	I31	R	0h	Interrupt associated with TCC #31
30	I30	R	0h	Interrupt associated with TCC #30
29	I29	R	0h	Interrupt associated with TCC #29
28	I28	R	0h	Interrupt associated with TCC #28
27	I27	R	0h	Interrupt associated with TCC #27
26	I26	R	0h	Interrupt associated with TCC #26
25	I25	R	0h	Interrupt associated with TCC #25
24	I24	R	0h	Interrupt associated with TCC #24
23	I23	R	0h	Interrupt associated with TCC #23
22	I22	R	0h	Interrupt associated with TCC #22
21	I21	R	0h	Interrupt associated with TCC #21
20	I20	R	0h	Interrupt associated with TCC #20
19	I19	R	0h	Interrupt associated with TCC #19
18	I18	R	0h	Interrupt associated with TCC #18
17	I17	R	0h	Interrupt associated with TCC #17
16	I16	R	0h	Interrupt associated with TCC #16
15	I15	R	0h	Interrupt associated with TCC #15
14	I14	R	0h	Interrupt associated with TCC #14
13	I13	R	0h	Interrupt associated with TCC #13
12	I12	R	0h	Interrupt associated with TCC #12
11	I11	R	0h	Interrupt associated with TCC #11
10	I10	R	0h	Interrupt associated with TCC #10
9	I9	R	0h	Interrupt associated with TCC #9
8	I8	R	0h	Interrupt associated with TCC #8
7	I7	R	0h	Interrupt associated with TCC #7
6	I6	R	0h	Interrupt associated with TCC #6

Copyright © 2025 Texas Instruments Incorporated

Table 10-91. IER Register Field Descriptions (continued)

Bit	Field	Type	Reset	Description
5	I5	R	0h	Interrupt associated with TCC #5
4	I4	R	0h	Interrupt associated with TCC #4
3	I3	R	0h	Interrupt associated with TCC #3
2	I2	R	0h	Interrupt associated with TCC #2
1	I1	R	0h	Interrupt associated with TCC #1
0	I0	R	0h	Interrupt associated with TCC #0

Copyright © 2025 Texas Instruments Incorporated

10.1.7.1.61 IERH Register (Offset = 1054h) [reset = 0h]

IERH is shown in Figure 10-87 and described in Table 10-92.

Return to the Table 10-31.

Int Enable Register (High Part): IERH.In is not directly writeable. Interrupts can be enabled via writes to IESRH and can be disabled via writes to IECRH register. IERH.In = 0: IPRH.In is NOT enabled for interrupts. IERH.In = 1: IPRH.In IS enabled for interrupts.

Figure 10-87. IERH Register

31	30	29	28	27	26	25	24	23	22	21	20	19	18	17	16
I63	I62	I61	I60	I59	I58	I57	I56	I55	I54	I53	I52	I51	I50	I49	I48
R-0h	R-0h	R-0h	R-0h	R-0h	R-0h	R-0h	R-0h	R-0h	R-0h	R-0h	R-0h	R-0h	R-0h	R-0h	R-0h
15	14	13	12	11	10	9	8	7	6	5	4	3	2	1	0
I47	I46	I45	I44	I43	I42	I41	I40	I39	I38	I37	I36	I35	I34	I33	I32
R-0h	R-0h	R-0h	R-0h	R-0h	R-0h	R-0h	R-0h	R-0h	R-0h	R-0h	R-0h	R-0h	R-0h	R-0h	R-0h

Table 10-92. IERH Register Field Descriptions

Bit	Field	Type	Reset	Description
31	I63	R	0h	Interrupt associated with TCC #63
30	I62	R	0h	Interrupt associated with TCC #62
29	I61	R	0h	Interrupt associated with TCC #61
28	I60	R	0h	Interrupt associated with TCC #60
27	I59	R	0h	Interrupt associated with TCC #59
26	I58	R	0h	Interrupt associated with TCC #58
25	I57	R	0h	Interrupt associated with TCC #57
24	I56	R	0h	Interrupt associated with TCC #56
23	I55	R	0h	Interrupt associated with TCC #55
22	I54	R	0h	Interrupt associated with TCC #54
21	I53	R	0h	Interrupt associated with TCC #53
20	I52	R	0h	Interrupt associated with TCC #52
19	I51	R	0h	Interrupt associated with TCC #51
18	I50	R	0h	Interrupt associated with TCC #50
17	I49	R	0h	Interrupt associated with TCC #49
16	I48	R	0h	Interrupt associated with TCC #48
15	I47	R	0h	Interrupt associated with TCC #47
14	I46	R	0h	Interrupt associated with TCC #46
13	I45	R	0h	Interrupt associated with TCC #45
12	I44	R	0h	Interrupt associated with TCC #44
11	I43	R	0h	Interrupt associated with TCC #43
10	I42	R	0h	Interrupt associated with TCC #42
9	I41	R	0h	Interrupt associated with TCC #41
8	I40	R	0h	Interrupt associated with TCC #40
7	I39	R	0h	Interrupt associated with TCC #39
6	I38	R	0h	Interrupt associated with TCC #38

Copyright © 2025 Texas Instruments Incorporated

Table 10-92. IERH Register Field Descriptions (continued)

Bit	Field	Type	Reset	Description
5	I37	R	0h	Interrupt associated with TCC #37
4	I36	R	0h	Interrupt associated with TCC #36
3	I35	R	0h	Interrupt associated with TCC #35
2	I34	R	0h	Interrupt associated with TCC #34
1	I33	R	0h	Interrupt associated with TCC #33
0	I32	R	0h	Interrupt associated with TCC #32

Copyright © 2025 Texas Instruments Incorporated

10.1.7.1.62 IECR Register (Offset = 1058h) [reset = 0h]

IECR is shown in Figure 10-88 and described in Table 10-93.

Return to the Table 10-31.

Int Enable Clear Register: CPU write of '1' to the IECR.In bit causes the IER.In bit to be cleared. CPU write of '0' has no effect..

Figure 10-88. IECR Register

31	30	29	28	27	26	25	24	23	22	21	20	19	18	17	16
I31	I30	I29	I28	I27	I26	I25	I24	I23	I22	I21	I20	I19	I18	I17	I16
W-0h	W-0h	W-0h	W-0h	W-0h	W-0h	W-0h	W-0h	W-0h	W-0h	W-0h	W-0h	W-0h	W-0h	W-0h	W-0h
15	14	13	12	11	10	9	8	7	6	5	4	3	2	1	0
I15	I14	I13	I12	I11	I10	I9	I8	I7	I6	I5	I4	I3	I2	I1	I0
W-0h	W-0h	W-0h	W-0h	W-0h	W-0h	W-0h	W-0h	W-0h	W-0h	W-0h	W-0h	W-0h	W-0h	W-0h	W-0h

Table 10-93. IECR Register Field Descriptions

Bit	Field	Type	Reset	Description
31	I31	W	0h	Interrupt associated with TCC #31
30	I30	W	0h	Interrupt associated with TCC #30
29	I29	W	0h	Interrupt associated with TCC #29
28	I28	W	0h	Interrupt associated with TCC #28
27	I27	W	0h	Interrupt associated with TCC #27
26	I26	W	0h	Interrupt associated with TCC #26
25	I25	W	0h	Interrupt associated with TCC #25
24	I24	W	0h	Interrupt associated with TCC #24
23	I23	W	0h	Interrupt associated with TCC #23
22	I22	W	0h	Interrupt associated with TCC #22
21	I21	W	0h	Interrupt associated with TCC #21
20	I20	W	0h	Interrupt associated with TCC #20
19	I19	W	0h	Interrupt associated with TCC #19
18	I18	W	0h	Interrupt associated with TCC #18
17	I17	W	0h	Interrupt associated with TCC #17
16	I16	W	0h	Interrupt associated with TCC #16
15	I15	W	0h	Interrupt associated with TCC #15
14	I14	W	0h	Interrupt associated with TCC #14
13	I13	W	0h	Interrupt associated with TCC #13
12	I12	W	0h	Interrupt associated with TCC #12
11	I11	W	0h	Interrupt associated with TCC #11
10	I10	W	0h	Interrupt associated with TCC #10
9	I9	W	0h	Interrupt associated with TCC #9
8	I8	W	0h	Interrupt associated with TCC #8
7	I7	W	0h	Interrupt associated with TCC #7
6	I6	W	0h	Interrupt associated with TCC #6

Copyright © 2025 Texas Instruments Incorporated

Table 10-93. IECR Register Field Descriptions (continued)

Bit	Field	Type	Reset	Description
5	I5	W	0h	Interrupt associated with TCC #5
4	I4	W	0h	Interrupt associated with TCC #4
3	I3	W	0h	Interrupt associated with TCC #3
2	I2	W	0h	Interrupt associated with TCC #2
1	I1	W	0h	Interrupt associated with TCC #1
0	I0	W	0h	Interrupt associated with TCC #0

Copyright © 2025 Texas Instruments Incorporated

10.1.7.1.63 IECRH Register (Offset = 105Ch) [reset = 0h]

IECRH is shown in Figure 10-89 and described in Table 10-94.

Return to the Table 10-31.

Int Enable Clear Register (High Part): CPU write of '1' to the IECRH.In bit causes the IERH.In bit to be cleared. CPU write of '0' has no effect..

Figure 10-89. IECRH Register

31	30	29	28	27	26	25	24	23	22	21	20	19	18	17	16
I63	I62	I61	I60	I59	I58	I57	I56	I55	I54	I53	I52	I51	I50	I49	I48
W-0h	W-0h	W-0h	W-0h	W-0h	W-0h	W-0h	W-0h	W-0h	W-0h	W-0h	W-0h	W-0h	W-0h	W-0h	W-0h
15	14	13	12	11	10	9	8	7	6	5	4	3	2	1	0
I47	I46	I45	I44	I43	I42	I41	I40	I39	I38	I37	I36	I35	I34	I33	I32
W-0h	W-0h	W-0h	W-0h	W-0h	W-0h	W-0h	W-0h	W-0h	W-0h	W-0h	W-0h	W-0h	W-0h	W-0h	W-0h

Table 10-94. IECRH Register Field Descriptions

Bit	Field	Type	Reset	Description
31	I63	W	0h	Interrupt associated with TCC #63
30	I62	W	0h	Interrupt associated with TCC #62
29	I61	W	0h	Interrupt associated with TCC #61
28	I60	W	0h	Interrupt associated with TCC #60
27	I59	W	0h	Interrupt associated with TCC #59
26	I58	W	0h	Interrupt associated with TCC #58
25	I57	W	0h	Interrupt associated with TCC #57
24	I56	W	0h	Interrupt associated with TCC #56
23	I55	W	0h	Interrupt associated with TCC #55
22	I54	W	0h	Interrupt associated with TCC #54
21	I53	W	0h	Interrupt associated with TCC #53
20	I52	W	0h	Interrupt associated with TCC #52
19	I51	W	0h	Interrupt associated with TCC #51
18	I50	W	0h	Interrupt associated with TCC #50
17	I49	W	0h	Interrupt associated with TCC #49
16	I48	W	0h	Interrupt associated with TCC #48
15	I47	W	0h	Interrupt associated with TCC #47
14	I46	W	0h	Interrupt associated with TCC #46
13	I45	W	0h	Interrupt associated with TCC #45
12	I44	W	0h	Interrupt associated with TCC #44
11	I43	W	0h	Interrupt associated with TCC #43
10	I42	W	0h	Interrupt associated with TCC #42
9	I41	W	0h	Interrupt associated with TCC #41
8	I40	W	0h	Interrupt associated with TCC #40
7	I39	W	0h	Interrupt associated with TCC #39
6	I38	W	0h	Interrupt associated with TCC #38

Copyright © 2025 Texas Instruments Incorporated

Table 10-94. IECRH Register Field Descriptions (continued)

Bit	Field	Type	Reset	Description
5	I37	W	0h	Interrupt associated with TCC #37
4	I36	W	0h	Interrupt associated with TCC #36
3	I35	W	0h	Interrupt associated with TCC #35
2	I34	W	0h	Interrupt associated with TCC #34
1	I33	W	0h	Interrupt associated with TCC #33
0	I32	W	0h	Interrupt associated with TCC #32

Copyright © 2025 Texas Instruments Incorporated

10.1.7.1.64 IESR Register (Offset = 1060h) [reset = 0h]

IESR is shown in Figure 10-90 and described in Table 10-95.

Return to the Table 10-31.

Int Enable Set Register: CPU write of '1' to the IESR.In bit causes the IESR.In bit to be set. CPU write of '0' has no effect..

Figure 10-90. IESR Register

31	30	29	28	27	26	25	24	23	22	21	20	19	18	17	16
I31	I30	I29	I28	I27	I26	I25	I24	I23	I22	I21	I20	I19	I18	I17	I16
W-0h	W-0h	W-0h	W-0h	W-0h	W-0h	W-0h	W-0h	W-0h	W-0h	W-0h	W-0h	W-0h	W-0h	W-0h	W-0h
15	14	13	12	11	10	9	8	7	6	5	4	3	2	1	0
I15	I14	I13	I12	I11	I10	I9	I8	I7	I6	I5	I4	I3	I2	I1	I0
W-0h	W-0h	W-0h	W-0h	W-0h	W-0h	W-0h	W-0h	W-0h	W-0h	W-0h	W-0h	W-0h	W-0h	W-0h	W-0h

Table 10-95. IESR Register Field Descriptions

Bit	Field	Type	Reset	Description
31	I31	W	0h	Interrupt associated with TCC #31
30	I30	W	0h	Interrupt associated with TCC #30
29	I29	W	0h	Interrupt associated with TCC #29
28	I28	W	0h	Interrupt associated with TCC #28
27	I27	W	0h	Interrupt associated with TCC #27
26	I26	W	0h	Interrupt associated with TCC #26
25	I25	W	0h	Interrupt associated with TCC #25
24	I24	W	0h	Interrupt associated with TCC #24
23	I23	W	0h	Interrupt associated with TCC #23
22	I22	W	0h	Interrupt associated with TCC #22
21	I21	W	0h	Interrupt associated with TCC #21
20	I20	W	0h	Interrupt associated with TCC #20
19	I19	W	0h	Interrupt associated with TCC #19
18	I18	W	0h	Interrupt associated with TCC #18
17	I17	W	0h	Interrupt associated with TCC #17
16	I16	W	0h	Interrupt associated with TCC #16
15	I15	W	0h	Interrupt associated with TCC #15
14	I14	W	0h	Interrupt associated with TCC #14
13	I13	W	0h	Interrupt associated with TCC #13
12	I12	W	0h	Interrupt associated with TCC #12
11	I11	W	0h	Interrupt associated with TCC #11
10	I10	W	0h	Interrupt associated with TCC #10
9	I9	W	0h	Interrupt associated with TCC #9
8	I8	W	0h	Interrupt associated with TCC #8
7	I7	W	0h	Interrupt associated with TCC #7
6	I6	W	0h	Interrupt associated with TCC #6

Copyright © 2025 Texas Instruments Incorporated

Table 10-95. IESR Register Field Descriptions (continued)

Bit	Field	Type	Reset	Description
5	I5	W	0h	Interrupt associated with TCC #5
4	I4	W	0h	Interrupt associated with TCC #4
3	I3	W	0h	Interrupt associated with TCC #3
2	I2	W	0h	Interrupt associated with TCC #2
1	I1	W	0h	Interrupt associated with TCC #1
0	I0	W	0h	Interrupt associated with TCC #0

Copyright © 2025 Texas Instruments Incorporated

10.1.7.1.65 IESRH Register (Offset = 1064h) [reset = 0h]

IESRH is shown in Figure 10-91 and described in Table 10-96.

Return to the Table 10-31.

Int Enable Set Register (High Part): CPU write of '1' to the IESRH.In bit causes the IESRH.In bit to be set. CPU write of '0' has no effect..

Figure 10-91. IESRH Register

31	30	29	28	27	26	25	24	23	22	21	20	19	18	17	16
I63	I62	I61	I60	I59	I58	I57	I56	I55	I54	I53	I52	I51	I50	I49	I48
W-0h	W-0h	W-0h	W-0h	W-0h	W-0h	W-0h	W-0h	W-0h	W-0h	W-0h	W-0h	W-0h	W-0h	W-0h	W-0h
15	14	13	12	11	10	9	8	7	6	5	4	3	2	1	0
I47	I46	I45	I44	I43	I42	I41	I40	I39	I38	I37	I36	I35	I34	I33	I32
W-0h	W-0h	W-0h	W-0h	W-0h	W-0h	W-0h	W-0h	W-0h	W-0h	W-0h	W-0h	W-0h	W-0h	W-0h	W-0h

Table 10-96. IESRH Register Field Descriptions

Bit	Field	Type	Reset	Description
31	I63	W	0h	Interrupt associated with TCC #63
30	I62	W	0h	Interrupt associated with TCC #62
29	I61	W	0h	Interrupt associated with TCC #61
28	I60	W	0h	Interrupt associated with TCC #60
27	I59	W	0h	Interrupt associated with TCC #59
26	I58	W	0h	Interrupt associated with TCC #58
25	I57	W	0h	Interrupt associated with TCC #57
24	I56	W	0h	Interrupt associated with TCC #56
23	I55	W	0h	Interrupt associated with TCC #55
22	I54	W	0h	Interrupt associated with TCC #54
21	I53	W	0h	Interrupt associated with TCC #53
20	I52	W	0h	Interrupt associated with TCC #52
19	I51	W	0h	Interrupt associated with TCC #51
18	I50	W	0h	Interrupt associated with TCC #50
17	I49	W	0h	Interrupt associated with TCC #49
16	I48	W	0h	Interrupt associated with TCC #48
15	I47	W	0h	Interrupt associated with TCC #47
14	I46	W	0h	Interrupt associated with TCC #46
13	I45	W	0h	Interrupt associated with TCC #45
12	I44	W	0h	Interrupt associated with TCC #44
11	I43	W	0h	Interrupt associated with TCC #43
10	I42	W	0h	Interrupt associated with TCC #42
9	I41	W	0h	Interrupt associated with TCC #41
8	I40	W	0h	Interrupt associated with TCC #40
7	I39	W	0h	Interrupt associated with TCC #39
6	I38	W	0h	Interrupt associated with TCC #38

Copyright © 2025 Texas Instruments Incorporated

Table 10-96. IESRH Register Field Descriptions (continued)

Bit	Field	Type	Reset	Description
5	I37	W	0h	Interrupt associated with TCC #37
4	I36	W	0h	Interrupt associated with TCC #36
3	I35	W	0h	Interrupt associated with TCC #35
2	I34	W	0h	Interrupt associated with TCC #34
1	I33	W	0h	Interrupt associated with TCC #33
0	I32	W	0h	Interrupt associated with TCC #32

Copyright © 2025 Texas Instruments Incorporated

10.1.7.1.66 IPR Register (Offset = 1068h) [reset = 0h]

IPR is shown in Figure 10-92 and described in Table 10-97.

Return to the Table 10-31.

Interrupt Pending Register: IPR.In bit is set when a interrupt completion code with TCC of N is detected. IPR.In bit is cleared via software by writing a '1' to ICR.In bit.

Figure 10-92. IPR Register

31	30	29	28	27	26	25	24	23	22	21	20	19	18	17	16
I31	I30	I29	I28	I27	I26	I25	I24	I23	I22	I21	I20	I19	I18	I17	I16
R-0h	R-0h	R-0h	R-0h	R-0h	R-0h	R-0h	R-0h	R-0h	R-0h	R-0h	R-0h	R-0h	R-0h	R-0h	R-0h
15	14	13	12	11	10	9	8	7	6	5	4	3	2	1	0
I15	I14	I13	I12	I11	I10	I9	I8	I7	I6	I5	I4	I3	I2	I1	I0
R-0h	R-0h	R-0h	R-0h	R-0h	R-0h	R-0h	R-0h	R-0h	R-0h	R-0h	R-0h	R-0h	R-0h	R-0h	R-0h

Table 10-97. IPR Register Field Descriptions

Bit	Field	Type	Reset	Description
31	I31	R	0h	Interrupt associated with TCC #31
30	I30	R	0h	Interrupt associated with TCC #30
29	I29	R	0h	Interrupt associated with TCC #29
28	I28	R	0h	Interrupt associated with TCC #28
27	I27	R	0h	Interrupt associated with TCC #27
26	I26	R	0h	Interrupt associated with TCC #26
25	I25	R	0h	Interrupt associated with TCC #25
24	I24	R	0h	Interrupt associated with TCC #24
23	I23	R	0h	Interrupt associated with TCC #23
22	I22	R	0h	Interrupt associated with TCC #22
21	I21	R	0h	Interrupt associated with TCC #21
20	I20	R	0h	Interrupt associated with TCC #20
19	I19	R	0h	Interrupt associated with TCC #19
18	I18	R	0h	Interrupt associated with TCC #18
17	I17	R	0h	Interrupt associated with TCC #17
16	I16	R	0h	Interrupt associated with TCC #16
15	I15	R	0h	Interrupt associated with TCC #15
14	I14	R	0h	Interrupt associated with TCC #14
13	I13	R	0h	Interrupt associated with TCC #13
12	I12	R	0h	Interrupt associated with TCC #12
11	I11	R	0h	Interrupt associated with TCC #11
10	I10	R	0h	Interrupt associated with TCC #10
9	I9	R	0h	Interrupt associated with TCC #9
8	I8	R	0h	Interrupt associated with TCC #8
7	I7	R	0h	Interrupt associated with TCC #7
6	I6	R	0h	Interrupt associated with TCC #6

Copyright © 2025 Texas Instruments Incorporated

Table 10-97. IPR Register Field Descriptions (continued)

Bit	Field	Type	Reset	Description
5	I5	R	0h	Interrupt associated with TCC #5
4	I4	R	0h	Interrupt associated with TCC #4
3	I3	R	0h	Interrupt associated with TCC #3
2	I2	R	0h	Interrupt associated with TCC #2
1	I1	R	0h	Interrupt associated with TCC #1
0	I0	R	0h	Interrupt associated with TCC #0

Copyright © 2025 Texas Instruments Incorporated

10.1.7.1.67 IPRH Register (Offset = 106Ch) [reset = 0h]

IPRH is shown in Figure 10-93 and described in Table 10-98.

Return to the Table 10-31.

Interrupt Pending Register (High Part): IPRH.In bit is set when a interrupt completion code with TCC of N is detected. IPRH.In bit is cleared via software by writing a '1' to ICRH.In bit.

Figure 10-93. IPRH Register

31	30	29	28	27	26	25	24	23	22	21	20	19	18	17	16
I63	I62	I61	I60	I59	I58	I57	I56	I55	I54	I53	I52	I51	I50	I49	I48
R-0h	R-0h	R-0h	R-0h	R-0h	R-0h	R-0h	R-0h	R-0h	R-0h	R-0h	R-0h	R-0h	R-0h	R-0h	R-0h
15	14	13	12	11	10	9	8	7	6	5	4	3	2	1	0
I47	I46	I45	I44	I43	I42	I41	I40	I39	I38	I37	I36	I35	I34	I33	I32
R-0h	R-0h	R-0h	R-0h	R-0h	R-0h	R-0h	R-0h	R-0h	R-0h	R-0h	R-0h	R-0h	R-0h	R-0h	R-0h

Table 10-98. IPRH Register Field Descriptions

Bit	Field	Type	Reset	Description
31	I63	R	0h	Interrupt associated with TCC #63
30	I62	R	0h	Interrupt associated with TCC #62
29	I61	R	0h	Interrupt associated with TCC #61
28	I60	R	0h	Interrupt associated with TCC #60
27	I59	R	0h	Interrupt associated with TCC #59
26	I58	R	0h	Interrupt associated with TCC #58
25	I57	R	0h	Interrupt associated with TCC #57
24	I56	R	0h	Interrupt associated with TCC #56
23	I55	R	0h	Interrupt associated with TCC #55
22	I54	R	0h	Interrupt associated with TCC #54
21	I53	R	0h	Interrupt associated with TCC #53
20	I52	R	0h	Interrupt associated with TCC #52
19	I51	R	0h	Interrupt associated with TCC #51
18	I50	R	0h	Interrupt associated with TCC #50
17	I49	R	0h	Interrupt associated with TCC #49
16	I48	R	0h	Interrupt associated with TCC #48
15	I47	R	0h	Interrupt associated with TCC #47
14	I46	R	0h	Interrupt associated with TCC #46
13	I45	R	0h	Interrupt associated with TCC #45
12	I44	R	0h	Interrupt associated with TCC #44
11	I43	R	0h	Interrupt associated with TCC #43
10	I42	R	0h	Interrupt associated with TCC #42
9	I41	R	0h	Interrupt associated with TCC #41
8	I40	R	0h	Interrupt associated with TCC #40
7	I39	R	0h	Interrupt associated with TCC #39
6	I38	R	0h	Interrupt associated with TCC #38

Copyright © 2025 Texas Instruments Incorporated

Table 10-98. IPRH Register Field Descriptions (continued)

Bit	Field	Type	Reset	Description
5	I37	R	0h	Interrupt associated with TCC #37
4	I36	R	0h	Interrupt associated with TCC #36
3	I35	R	0h	Interrupt associated with TCC #35
2	I34	R	0h	Interrupt associated with TCC #34
1	I33	R	0h	Interrupt associated with TCC #33
0	I32	R	0h	Interrupt associated with TCC #32

Copyright © 2025 Texas Instruments Incorporated

10.1.7.1.68 ICR Register (Offset = 1070h) [reset = 0h]

ICR is shown in Figure 10-94 and described in Table 10-99.

Return to the Table 10-31.

Interrupt Clear Register: CPU write of '1' to the ICR.In bit causes the IPR.In bit to be cleared. CPU write of '0' has no effect. All IPR.In bits must be cleared before additional interrupts will be asserted by CC.

Figure 10-94. ICR Register

31	30	29	28	27	26	25	24	23	22	21	20	19	18	17	16
I31	I30	I29	I28	I27	I26	I25	I24	I23	I22	I21	I20	I19	I18	I17	I16
W-0h	W-0h	W-0h	W-0h	W-0h	W-0h	W-0h	W-0h	W-0h	W-0h	W-0h	W-0h	W-0h	W-0h	W-0h	W-0h
15	14	13	12	11	10	9	8	7	6	5	4	3	2	1	0
I15	I14	I13	I12	I11	I10	I9	I8	I7	I6	I5	I4	I3	I2	I1	I0
W-0h	W-0h	W-0h	W-0h	W-0h	W-0h	W-0h	W-0h	W-0h	W-0h	W-0h	W-0h	W-0h	W-0h	W-0h	W-0h

Table 10-99. ICR Register Field Descriptions

Bit	Field	Type	Reset	Description
31	I31	W	0h	Interrupt associated with TCC #31
30	I30	W	0h	Interrupt associated with TCC #30
29	I29	W	0h	Interrupt associated with TCC #29
28	I28	W	0h	Interrupt associated with TCC #28
27	I27	W	0h	Interrupt associated with TCC #27
26	I26	W	0h	Interrupt associated with TCC #26
25	I25	W	0h	Interrupt associated with TCC #25
24	I24	W	0h	Interrupt associated with TCC #24
23	I23	W	0h	Interrupt associated with TCC #23
22	I22	W	0h	Interrupt associated with TCC #22
21	I21	W	0h	Interrupt associated with TCC #21
20	I20	W	0h	Interrupt associated with TCC #20
19	I19	W	0h	Interrupt associated with TCC #19
18	I18	W	0h	Interrupt associated with TCC #18
17	I17	W	0h	Interrupt associated with TCC #17
16	I16	W	0h	Interrupt associated with TCC #16
15	I15	W	0h	Interrupt associated with TCC #15
14	I14	W	0h	Interrupt associated with TCC #14
13	I13	W	0h	Interrupt associated with TCC #13
12	I12	W	0h	Interrupt associated with TCC #12
11	I11	W	0h	Interrupt associated with TCC #11
10	I10	W	0h	Interrupt associated with TCC #10
9	I9	W	0h	Interrupt associated with TCC #9
8	I8	W	0h	Interrupt associated with TCC #8
7	I7	W	0h	Interrupt associated with TCC #7
6	I6	W	0h	Interrupt associated with TCC #6

Copyright © 2025 Texas Instruments Incorporated

Table 10-99. ICR Register Field Descriptions (continued)

Bit	Field	Type	Reset	Description
5	I5	W	0h	Interrupt associated with TCC #5
4	I4	W	0h	Interrupt associated with TCC #4
3	I3	W	0h	Interrupt associated with TCC #3
2	I2	W	0h	Interrupt associated with TCC #2
1	I1	W	0h	Interrupt associated with TCC #1
0	I0	W	0h	Interrupt associated with TCC #0

Copyright © 2025 Texas Instruments Incorporated

10.1.7.1.69 ICRH Register (Offset = 1074h) [reset = 0h]

ICRH is shown in Figure 10-95 and described in Table 10-100.

Return to the Table 10-31.

Interrupt Clear Register (High Part): CPU write of '1' to the ICRH.In bit causes the IPRH.In bit to be cleared. CPU write of '0' has no effect. All IPRH.In bits must be cleared before additional interrupts will be asserted by CC.

Figure 10-95. ICRH Register

31	30	29	28	27	26	25	24	23	22	21	20	19	18	17	16
I63	I62	I61	I60	I59	I58	I57	I56	I55	I54	I53	I52	I51	I50	I49	I48
W-0h	W-0h	W-0h	W-0h	W-0h	W-0h	W-0h	W-0h	W-0h	W-0h	W-0h	W-0h	W-0h	W-0h	W-0h	W-0h
15	14	13	12	11	10	9	8	7	6	5	4	3	2	1	0
I47	I46	I45	I44	I43	I42	I41	I40	I39	I38	I37	I36	I35	I34	I33	I32
W-0h	W-0h	W-0h	W-0h	W-0h	W-0h	W-0h	W-0h	W-0h	W-0h	W-0h	W-0h	W-0h	W-0h	W-0h	W-0h

Table 10-100. ICRH Register Field Descriptions

Bit	Field	Type	Reset	Description
31	I63	W	0h	Interrupt associated with TCC #63
30	I62	W	0h	Interrupt associated with TCC #62
29	I61	W	0h	Interrupt associated with TCC #61
28	I60	W	0h	Interrupt associated with TCC #60
27	I59	W	0h	Interrupt associated with TCC #59
26	I58	W	0h	Interrupt associated with TCC #58
25	I57	W	0h	Interrupt associated with TCC #57
24	I56	W	0h	Interrupt associated with TCC #56
23	I55	W	0h	Interrupt associated with TCC #55
22	I54	W	0h	Interrupt associated with TCC #54
21	I53	W	0h	Interrupt associated with TCC #53
20	I52	W	0h	Interrupt associated with TCC #52
19	I51	W	0h	Interrupt associated with TCC #51
18	I50	W	0h	Interrupt associated with TCC #50
17	I49	W	0h	Interrupt associated with TCC #49
16	I48	W	0h	Interrupt associated with TCC #48
15	I47	W	0h	Interrupt associated with TCC #47
14	I46	W	0h	Interrupt associated with TCC #46
13	I45	W	0h	Interrupt associated with TCC #45
12	I44	W	0h	Interrupt associated with TCC #44
11	I43	W	0h	Interrupt associated with TCC #43
10	I42	W	0h	Interrupt associated with TCC #42
9	I41	W	0h	Interrupt associated with TCC #41
8	I40	W	0h	Interrupt associated with TCC #40
7	I39	W	0h	Interrupt associated with TCC #39
6	I38	W	0h	Interrupt associated with TCC #38

Copyright © 2025 Texas Instruments Incorporated

Table 10-100. ICRH Register Field Descriptions (continued)

Bit	Field	Type	Reset	Description
5	I37	W	0h	Interrupt associated with TCC #37
4	I36	W	0h	Interrupt associated with TCC #36
3	I35	W	0h	Interrupt associated with TCC #35
2	I34	W	0h	Interrupt associated with TCC #34
1	I33	W	0h	Interrupt associated with TCC #33
0	I32	W	0h	Interrupt associated with TCC #32

Copyright © 2025 Texas Instruments Incorporated

10.1.7.1.70 IEVAL Register (Offset = 1078h) [reset = 0h]

IEVAL is shown in Figure 10-96 and described in Table 10-101.

Return to the Table 10-31.

Interrupt Eval Register

Figure 10-96. IEVAL Register

31	30	29	28	27	26	25	24
RES69							
R-0h							
23	22	21	20	19	18	17	16
RES69							
R-0h							
15	14	13	12	11	10	9	8
RES69							
R-0h							
7	6	5	4	3	2	1	0
RES69						SET	EVAL
R-0h						W-0h	W-0h

Table 10-101. IEVAL Register Field Descriptions

Bit	Field	Type	Reset	Description
31-2	RES69	R	0h	RESERVE FIELD
1	SET	W	0h	Interrupt Set: CPU write of '1' to the SETn bit causes the tpcc_intN output signal to be pulsed egardless of state of interrupts enable (IERn) and status (IPRn). CPU write of '0' has no effect.
0	EVAL	W	0h	Interrupt Evaluate: CPU write of '1' to the EVALn bit causes the tpcc_intN output signal to be pulsed if any enabled interrupts (IERn) are still pending (IPRn). CPU write of '0' has no effect..

Copyright © 2025 Texas Instruments Incorporated

10.1.7.1.71 QER Register (Offset = 1080h) [reset = 0h]

QER is shown in Figure 10-97 and described in Table 10-102.

Return to the Table 10-31.

QDMA Event Register: If QER.En bit is set then the corresponding QDMA channel is prioritized vs. other qdma events for submission to the TC. QER.En bit is set when a vbus write byte matches the address defined in the QCHMAPn register. QER.En bit is cleared when the corresponding event is prioritized and serviced. QER.En is also cleared when user writes a '1' to the QSECR.En bit. If the QER.En bit is already set and a new QDMA event is detected due to user write to QDMA trigger location and QEER register is set then the corresponding bit in the QDMA Event Missed Register is set.

Figure 10-97. QER Register

31	30	29	28	27	26	25	24	23	22	21	20	19	18	17	16
RES70															
R-0h															
15	14	13	12	11	10	9	8	7	6	5	4	3	2	1	0
RES70								E7	E6	E5	E4	E3	E2	E1	E0
R-0h								R-0h	R-0h	R-0h	R-0h	R-0h	R-0h	R-0h	R-0h

Table 10-102. QER Register Field Descriptions

Bit	Field	Type	Reset	Description
31-8	RES70	R	0h	RESERVE FIELD
7	E7	R	0h	Event #7
6	E6	R	0h	Event #6
5	E5	R	0h	Event #5
4	E4	R	0h	Event #4
3	E3	R	0h	Event #3
2	E2	R	0h	Event #2
1	E1	R	0h	Event #1
0	E0	R	0h	Event #0

Copyright © 2025 Texas Instruments Incorporated

10.1.7.1.72 QEER Register (Offset = 1084h) [reset = 0h]

QEER is shown in Figure 10-98 and described in Table 10-103.

Return to the Table 10-31.

QDMA Event Enable Register: Enabled/disabled QDMA address comparator for QDMA Channel N. QEER.En is not directly writeable. QDMA channels can be enabled via writes to QEESR and can be disabled via writes to QEECR register. QEER.En = 1 The corresponding QDMA channel comparator is enabled and Events will be recognized and latched in QER.En. QEER.En = 0 The corresponding QDMA channel comparator is disabled. Events will not be recognized/latched in QER.En.

Figure 10-98. QEER Register

31	30	29	28	27	26	25	24	23	22	21	20	19	18	17	16
RES71															
R-0h															
15	14	13	12	11	10	9	8	7	6	5	4	3	2	1	0
RES71								E7	E6	E5	E4	E3	E2	E1	E0
R-0h								R-0h	R-0h	R-0h	R-0h	R-0h	R-0h	R-0h	R-0h

Table 10-103. QEER Register Field Descriptions

Bit	Field	Type	Reset	Description
31-8	RES71	R	0h	RESERVE FIELD
7	E7	R	0h	Event #7
6	E6	R	0h	Event #6
5	E5	R	0h	Event #5
4	E4	R	0h	Event #4
3	E3	R	0h	Event #3
2	E2	R	0h	Event #2
1	E1	R	0h	Event #1
0	E0	R	0h	Event #0

Copyright © 2025 Texas Instruments Incorporated

10.1.7.1.73 QEECR Register (Offset = 1088h) [reset = 0h]

QEECR is shown in Figure 10-99 and described in Table 10-104.

Return to the Table 10-31.

QDMA Event Enable Clear Register: CPU write of '1' to the QEECR.En bit causes the QEER.En bit to be cleared. CPU write of '0' has no effect..

Figure 10-99. QEECR Register

31	30	29	28	27	26	25	24	23	22	21	20	19	18	17	16
RES72															
R-0h															
15	14	13	12	11	10	9	8	7	6	5	4	3	2	1	0
RES72								E7	E6	E5	E4	E3	E2	E1	E0
R-0h								W-0h	W-0h	W-0h	W-0h	W-0h	W-0h	W-0h	W-0h

Table 10-104. QEECR Register Field Descriptions

Bit	Field	Type	Reset	Description
31-8	RES72	R	0h	RESERVE FIELD
7	E7	W	0h	Event #7
6	E6	W	0h	Event #6
5	E5	W	0h	Event #5
4	E4	W	0h	Event #4
3	E3	W	0h	Event #3
2	E2	W	0h	Event #2
1	E1	W	0h	Event #1
0	E0	W	0h	Event #0

Copyright © 2025 Texas Instruments Incorporated

10.1.7.1.74 QEESR Register (Offset = 108Ch) [reset = 0h]

QEESR is shown in Figure 10-100 and described in Table 10-105.

Return to the Table 10-31.

QDMA Event Enable Set Register: CPU write of '1' to the QEESR.En bit causes the QEESR.En bit to be set. CPU write of '0' has no effect..

Figure 10-100. QEESR Register

31	30	29	28	27	26	25	24	23	22	21	20	19	18	17	16
RES73															
R-0h															
15	14	13	12	11	10	9	8	7	6	5	4	3	2	1	0
RES73								E7	E6	E5	E4	E3	E2	E1	E0
R-0h								W-0h	W-0h	W-0h	W-0h	W-0h	W-0h	W-0h	W-0h

Table 10-105. QEESR Register Field Descriptions

Bit	Field	Type	Reset	Description
31-8	RES73	R	0h	RESERVE FIELD
7	E7	W	0h	Event #7
6	E6	W	0h	Event #6
5	E5	W	0h	Event #5
4	E4	W	0h	Event #4
3	E3	W	0h	Event #3
2	E2	W	0h	Event #2
1	E1	W	0h	Event #1
0	E0	W	0h	Event #0

Copyright © 2025 Texas Instruments Incorporated

10.1.7.1.75 QSER Register (Offset = 1090h) [reset = 0h]

QSER is shown in Figure 10-101 and described in Table 10-106.

Return to the Table 10-31.

QDMA Secondary Event Register: The QDMA secondary event register is used along with the QDMA Event Register (QER) to provide information on the state of a QDMA Event. En = 0 : Event is not currently in the Event Queue. En = 1 : Event is currently stored in Event Queue. Event arbiter will not prioritize additional events.

Figure 10-101. QSER Register

31	30	29	28	27	26	25	24	23	22	21	20	19	18	17	16
RES74															
R-0h															
15	14	13	12	11	10	9	8	7	6	5	4	3	2	1	0
RES74								E7	E6	E5	E4	E3	E2	E1	E0
R-0h								R-0h	R-0h	R-0h	R-0h	R-0h	R-0h	R-0h	R-0h

Table 10-106. QSER Register Field Descriptions

Bit	Field	Type	Reset	Description
31-8	RES74	R	0h	RESERVE FIELD
7	E7	R	0h	Event #7
6	E6	R	0h	Event #6
5	E5	R	0h	Event #5
4	E4	R	0h	Event #4
3	E3	R	0h	Event #3
2	E2	R	0h	Event #2
1	E1	R	0h	Event #1
0	E0	R	0h	Event #0

Copyright © 2025 Texas Instruments Incorporated

10.1.7.1.76 QSECR Register (Offset = 1094h) [reset = 0h]

QSECR is shown in Figure 10-102 and described in Table 10-107.

Return to the Table 10-31.

QDMA Secondary Event Clear Register: The secondary event clear register is used to clear the status of the QSER and QER register (note that this is slightly different than the SER operation which does not clear the ER.En register). CPU write of '1' to the QSECR.En bit clears the QSER.En and QER.En register fields. CPU write of '0' has no effect..

Figure 10-102. QSECR Register

31	30	29	28	27	26	25	24	23	22	21	20	19	18	17	16
RES75															
R-0h															
15	14	13	12	11	10	9	8	7	6	5	4	3	2	1	0
RES75								E7	E6	E5	E4	E3	E2	E1	E0
R-0h								W-0h	W-0h	W-0h	W-0h	W-0h	W-0h	W-0h	W-0h

Table 10-107. QSECR Register Field Descriptions

Bit	Field	Type	Reset	Description
31-8	RES75	R	0h	RESERVE FIELD
7	E7	W	0h	Event #7
6	E6	W	0h	Event #6
5	E5	W	0h	Event #5
4	E4	W	0h	Event #4
3	E3	W	0h	Event #3
2	E2	W	0h	Event #2
1	E1	W	0h	Event #1
0	E0	W	0h	Event #0

Copyright © 2025 Texas Instruments Incorporated

10.1.7.1.77 ER_RN Register (Offset = 2000h) [reset = 0h]

ER_RN is shown in Figure 10-103 and described in Table 10-108.

Return to the Table 10-31.

Event Register: If ER.En bit is set and the EER.En bit is also set then the corresponding DMA channel is prioritized vs. other pending DMA events for submission to the TC. ER.En bit is set when the input event #n transitions from inactive (low) to active (high) regardless of the state of EER.En bit. ER.En bit is cleared when the corresponding event is prioritized and serviced. If the ER.En bit is already set and a new inactive to active transition is detected on the input event #n input AND the corresponding bit in the EER register is set then the corresponding bit in the Event Missed Register is set. Event N can be cleared via sw by writing a '1' to the ECR pseudo-register.

Figure 10-103. ER_RN Register

31	30	29	28	27	26	25	24	23	22	21	20	19	18	17	16
E31	E30	E29	E28	E27	E26	E25	E24	E23	E22	E21	E20	E19	E18	E17	E16
R-0h	R-0h	R-0h	R-0h	R-0h	R-0h	R-0h	R-0h	R-0h	R-0h	R-0h	R-0h	R-0h	R-0h	R-0h	R-0h
15	14	13	12	11	10	9	8	7	6	5	4	3	2	1	0
E15	E14	E13	E12	E11	E10	E9	E8	E7	E6	E5	E4	E3	E2	E1	E0
R-0h	R-0h	R-0h	R-0h	R-0h	R-0h	R-0h	R-0h	R-0h	R-0h	R-0h	R-0h	R-0h	R-0h	R-0h	R-0h

Table 10-108. ER_RN Register Field Descriptions

Bit	Field	Type	Reset	Description
31	E31	R	0h	Event #31
30	E30	R	0h	Event #30
29	E29	R	0h	Event #29
28	E28	R	0h	Event #28
27	E27	R	0h	Event #27
26	E26	R	0h	Event #26
25	E25	R	0h	Event #25
24	E24	R	0h	Event #24
23	E23	R	0h	Event #23
22	E22	R	0h	Event #22
21	E21	R	0h	Event #21
20	E20	R	0h	Event #20
19	E19	R	0h	Event #19
18	E18	R	0h	Event #18
17	E17	R	0h	Event #17
16	E16	R	0h	Event #16
15	E15	R	0h	Event #15
14	E14	R	0h	Event #14
13	E13	R	0h	Event #13
12	E12	R	0h	Event #12
11	E11	R	0h	Event #11
10	E10	R	0h	Event #10
9	E9	R	0h	Event #9

Copyright © 2025 Texas Instruments Incorporated

Table 10-108. ER_RN Register Field Descriptions (continued)

Bit	Field	Type	Reset	Description
8	E8	R	0h	Event #8
7	E7	R	0h	Event #7
6	E6	R	0h	Event #6
5	E5	R	0h	Event #5
4	E4	R	0h	Event #4
3	E3	R	0h	Event #3
2	E2	R	0h	Event #2
1	E1	R	0h	Event #1
0	E0	R	0h	Event #0

Copyright © 2025 Texas Instruments Incorporated

10.1.7.1.78 ERH_RN Register (Offset = 2004h) [reset = 0h]

ERH_RN is shown in Figure 10-104 and described in Table 10-109.

Return to the Table 10-31.

Event Register (High Part): If ERH.En bit is set and the EERH.En bit is also set then the corresponding DMA channel is prioritized vs. other pending DMA events for submission to the TC. ERH.En bit is set when the input event #n transitions from inactive (low) to active (high) regardless of the state of EERH.En bit. ER.En bit is cleared when the corresponding event is prioritized and serviced. If the ERH.En bit is already set and a new inactive to active transition is detected on the input event #n input AND the corresponding bit in the EERH register is set then the corresponding bit in the Event Missed Register is set. Event N can be cleared via sw by writing a '1' to the ECRH pseudo-register.

Figure 10-104. ERH_RN Register

31	30	29	28	27	26	25	24	23	22	21	20	19	18	17	16
E63	E62	E61	E60	E59	E58	E57	E56	E55	E54	E53	E52	E51	E50	E49	E48
R-0h	R-0h	R-0h	R-0h	R-0h	R-0h	R-0h	R-0h	R-0h	R-0h	R-0h	R-0h	R-0h	R-0h	R-0h	R-0h
15	14	13	12	11	10	9	8	7	6	5	4	3	2	1	0
E47	E46	E45	E44	E43	E42	E41	E40	E39	E38	E37	E36	E35	E34	E33	E32
R-0h	R-0h	R-0h	R-0h	R-0h	R-0h	R-0h	R-0h	R-0h	R-0h	R-0h	R-0h	R-0h	R-0h	R-0h	R-0h

Table 10-109. ERH_RN Register Field Descriptions

Bit	Field	Type	Reset	Description
31	E63	R	0h	Event #63
30	E62	R	0h	Event #62
29	E61	R	0h	Event #61
28	E60	R	0h	Event #60
27	E59	R	0h	Event #59
26	E58	R	0h	Event #58
25	E57	R	0h	Event #57
24	E56	R	0h	Event #56
23	E55	R	0h	Event #55
22	E54	R	0h	Event #54
21	E53	R	0h	Event #53
20	E52	R	0h	Event #52
19	E51	R	0h	Event #51
18	E50	R	0h	Event #50
17	E49	R	0h	Event #49
16	E48	R	0h	Event #48
15	E47	R	0h	Event #47
14	E46	R	0h	Event #46
13	E45	R	0h	Event #45
12	E44	R	0h	Event #44
11	E43	R	0h	Event #43
10	E42	R	0h	Event #42
9	E41	R	0h	Event #41

Copyright © 2025 Texas Instruments Incorporated

Table 10-109. ERH_RN Register Field Descriptions (continued)

Bit	Field	Type	Reset	Description
8	E40	R	0h	Event #40
7	E39	R	0h	Event #39
6	E38	R	0h	Event #38
5	E37	R	0h	Event #37
4	E36	R	0h	Event #36
3	E35	R	0h	Event #35
2	E34	R	0h	Event #34
1	E33	R	0h	Event #33
0	E32	R	0h	Event #32

Copyright © 2025 Texas Instruments Incorporated

10.1.7.1.79 ECR_RN Register (Offset = 2008h) [reset = 0h]

ECR_RN is shown in Figure 10-105 and described in Table 10-110.

Return to the Table 10-31.

Event Clear Register: CPU write of '1' to the ECR.En bit causes the ER.En bit to be cleared. CPU write of '0' has no effect.

Figure 10-105. ECR_RN Register

31	30	29	28	27	26	25	24	23	22	21	20	19	18	17	16
E31	E30	E29	E28	E27	E26	E25	E24	E23	E22	E21	E20	E19	E18	E17	E16
W-0h	W-0h	W-0h	W-0h	W-0h	W-0h	W-0h	W-0h	W-0h	W-0h	W-0h	W-0h	W-0h	W-0h	W-0h	W-0h
15	14	13	12	11	10	9	8	7	6	5	4	3	2	1	0
E15	E14	E13	E12	E11	E10	E9	E8	E7	E6	E5	E4	E3	E2	E1	E0
W-0h	W-0h	W-0h	W-0h	W-0h	W-0h	W-0h	W-0h	W-0h	W-0h	W-0h	W-0h	W-0h	W-0h	W-0h	W-0h

Table 10-110. ECR_RN Register Field Descriptions

Bit	Field	Type	Reset	Description
31	E31	W	0h	Event #31
30	E30	W	0h	Event #30
29	E29	W	0h	Event #29
28	E28	W	0h	Event #28
27	E27	W	0h	Event #27
26	E26	W	0h	Event #26
25	E25	W	0h	Event #25
24	E24	W	0h	Event #24
23	E23	W	0h	Event #23
22	E22	W	0h	Event #22
21	E21	W	0h	Event #21
20	E20	W	0h	Event #20
19	E19	W	0h	Event #19
18	E18	W	0h	Event #18
17	E17	W	0h	Event #17
16	E16	W	0h	Event #16
15	E15	W	0h	Event #15
14	E14	W	0h	Event #14
13	E13	W	0h	Event #13
12	E12	W	0h	Event #12
11	E11	W	0h	Event #11
10	E10	W	0h	Event #10
9	E9	W	0h	Event #9
8	E8	W	0h	Event #8
7	E7	W	0h	Event #7
6	E6	W	0h	Event #6

Copyright © 2025 Texas Instruments Incorporated

Table 10-110. ECR_RN Register Field Descriptions (continued)

Bit	Field	Type	Reset	Description
5	E5	W	0h	Event #5
4	E4	W	0h	Event #4
3	E3	W	0h	Event #3
2	E2	W	0h	Event #2
1	E1	W	0h	Event #1
0	E0	W	0h	Event #0

Copyright © 2025 Texas Instruments Incorporated

10.1.7.1.80 ECRH_RN Register (Offset = 200Ch) [reset = 0h]

ECRH_RN is shown in Figure 10-106 and described in Table 10-111.

Return to the Table 10-31.

Event Clear Register (High Part): CPU write of '1' to the ECRH.En bit causes the ERH.En bit to be cleared. CPU write of '0' has no effect.

Figure 10-106. ECRH_RN Register

31	30	29	28	27	26	25	24	23	22	21	20	19	18	17	16
E63	E62	E61	E60	E59	E58	E57	E56	E55	E54	E53	E52	E51	E50	E49	E48
W-0h	W-0h	W-0h	W-0h	W-0h	W-0h	W-0h	W-0h	W-0h	W-0h	W-0h	W-0h	W-0h	W-0h	W-0h	W-0h
15	14	13	12	11	10	9	8	7	6	5	4	3	2	1	0
E47	E46	E45	E44	E43	E42	E41	E40	E39	E38	E37	E36	E35	E34	E33	E32
W-0h	W-0h	W-0h	W-0h	W-0h	W-0h	W-0h	W-0h	W-0h	W-0h	W-0h	W-0h	W-0h	W-0h	W-0h	W-0h

Table 10-111. ECRH_RN Register Field Descriptions

Bit	Field	Type	Reset	Description
31	E63	W	0h	Event #63
30	E62	W	0h	Event #62
29	E61	W	0h	Event #61
28	E60	W	0h	Event #60
27	E59	W	0h	Event #59
26	E58	W	0h	Event #58
25	E57	W	0h	Event #57
24	E56	W	0h	Event #56
23	E55	W	0h	Event #55
22	E54	W	0h	Event #54
21	E53	W	0h	Event #53
20	E52	W	0h	Event #52
19	E51	W	0h	Event #51
18	E50	W	0h	Event #50
17	E49	W	0h	Event #49
16	E48	W	0h	Event #48
15	E47	W	0h	Event #47
14	E46	W	0h	Event #46
13	E45	W	0h	Event #45
12	E44	W	0h	Event #44
11	E43	W	0h	Event #43
10	E42	W	0h	Event #42
9	E41	W	0h	Event #41
8	E40	W	0h	Event #40
7	E39	W	0h	Event #39
6	E38	W	0h	Event #38

Copyright © 2025 Texas Instruments Incorporated

Table 10-111. ECRH_RN Register Field Descriptions (continued)

Bit	Field	Type	Reset	Description
5	E37	W	0h	Event #37
4	E36	W	0h	Event #36
3	E35	W	0h	Event #35
2	E34	W	0h	Event #34
1	E33	W	0h	Event #33
0	E32	W	0h	Event #32

Copyright © 2025 Texas Instruments Incorporated

10.1.7.1.81 ESR_RN Register (Offset = 2010h) [reset = 0h]

ESR_RN is shown in Figure 10-107 and described in Table 10-112.

Return to the Table 10-31.

Event Set Register: CPU write of '1' to the ESR.En bit causes the ER.En bit to be set. CPU write of '0' has no effect.

Figure 10-107. ESR_RN Register

31	30	29	28	27	26	25	24	23	22	21	20	19	18	17	16
E31	E30	E29	E28	E27	E26	E25	E24	E23	E22	E21	E20	E19	E18	E17	E16
W-0h	W-0h	W-0h	W-0h	W-0h	W-0h	W-0h	W-0h	W-0h	W-0h	W-0h	W-0h	W-0h	W-0h	W-0h	W-0h
15	14	13	12	11	10	9	8	7	6	5	4	3	2	1	0
E15	E14	E13	E12	E11	E10	E9	E8	E7	E6	E5	E4	E3	E2	E1	E0
W-0h	W-0h	W-0h	W-0h	W-0h	W-0h	W-0h	W-0h	W-0h	W-0h	W-0h	W-0h	W-0h	W-0h	W-0h	W-0h

Table 10-112. ESR_RN Register Field Descriptions

Bit	Field	Type	Reset	Description
31	E31	W	0h	Event #31
30	E30	W	0h	Event #30
29	E29	W	0h	Event #29
28	E28	W	0h	Event #28
27	E27	W	0h	Event #27
26	E26	W	0h	Event #26
25	E25	W	0h	Event #25
24	E24	W	0h	Event #24
23	E23	W	0h	Event #23
22	E22	W	0h	Event #22
21	E21	W	0h	Event #21
20	E20	W	0h	Event #20
19	E19	W	0h	Event #19
18	E18	W	0h	Event #18
17	E17	W	0h	Event #17
16	E16	W	0h	Event #16
15	E15	W	0h	Event #15
14	E14	W	0h	Event #14
13	E13	W	0h	Event #13
12	E12	W	0h	Event #12
11	E11	W	0h	Event #11
10	E10	W	0h	Event #10
9	E9	W	0h	Event #9
8	E8	W	0h	Event #8
7	E7	W	0h	Event #7
6	E6	W	0h	Event #6

Copyright © 2025 Texas Instruments Incorporated

Table 10-112. ESR_RN Register Field Descriptions (continued)

Bit	Field	Type	Reset	Description
5	E5	W	0h	Event #5
4	E4	W	0h	Event #4
3	E3	W	0h	Event #3
2	E2	W	0h	Event #2
1	E1	W	0h	Event #1
0	E0	W	0h	Event #0

Copyright © 2025 Texas Instruments Incorporated

10.1.7.1.82 ESRH_RN Register (Offset = 2014h) [reset = 0h]

ESRH_RN is shown in Figure 10-108 and described in Table 10-113.

Return to the Table 10-31.

Event Set Register (High Part) CPU write of '1' to the ESRH.En bit causes the ERH.En bit to be set. CPU write of '0' has no effect.

Figure 10-108. ESRH_RN Register

31	30	29	28	27	26	25	24	23	22	21	20	19	18	17	16
E63	E62	E61	E60	E59	E58	E57	E56	E55	E54	E53	E52	E51	E50	E49	E48
W-0h	W-0h	W-0h	W-0h	W-0h	W-0h	W-0h	W-0h	W-0h	W-0h	W-0h	W-0h	W-0h	W-0h	W-0h	W-0h
15	14	13	12	11	10	9	8	7	6	5	4	3	2	1	0
E47	E46	E45	E44	E43	E42	E41	E40	E39	E38	E37	E36	E35	E34	E33	E32
W-0h	W-0h	W-0h	W-0h	W-0h	W-0h	W-0h	W-0h	W-0h	W-0h	W-0h	W-0h	W-0h	W-0h	W-0h	W-0h

Table 10-113. ESRH_RN Register Field Descriptions

Bit	Field	Type	Reset	Description
31	E63	W	0h	Event #63
30	E62	W	0h	Event #62
29	E61	W	0h	Event #61
28	E60	W	0h	Event #60
27	E59	W	0h	Event #59
26	E58	W	0h	Event #58
25	E57	W	0h	Event #57
24	E56	W	0h	Event #56
23	E55	W	0h	Event #55
22	E54	W	0h	Event #54
21	E53	W	0h	Event #53
20	E52	W	0h	Event #52
19	E51	W	0h	Event #51
18	E50	W	0h	Event #50
17	E49	W	0h	Event #49
16	E48	W	0h	Event #48
15	E47	W	0h	Event #47
14	E46	W	0h	Event #46
13	E45	W	0h	Event #45
12	E44	W	0h	Event #44
11	E43	W	0h	Event #43
10	E42	W	0h	Event #42
9	E41	W	0h	Event #41
8	E40	W	0h	Event #40
7	E39	W	0h	Event #39
6	E38	W	0h	Event #38

Copyright © 2025 Texas Instruments Incorporated

Table 10-113. ESRH_RN Register Field Descriptions (continued)

Bit	Field	Type	Reset	Description
5	E37	W	0h	Event #37
4	E36	W	0h	Event #36
3	E35	W	0h	Event #35
2	E34	W	0h	Event #34
1	E33	W	0h	Event #33
0	E32	W	0h	Event #32

Copyright © 2025 Texas Instruments Incorporated

10.1.7.1.83 CER_RN Register (Offset = 2018h) [reset = 0h]

CER_RN is shown in Figure 10-109 and described in Table 10-114.

Return to the Table 10-31.

Chained Event Register: If CER.En bit is set (regardless of state of EER.En) then the corresponding DMA channel is prioritized vs. other pending DMA events for submission to the TC. CER.En bit is set when a chaining completion code is returned from one of the 3PTCs via the completion interface or is generated internally via Early Completion path. CER.En bit is cleared when the corresponding event is prioritized and serviced. If the CER.En bit is already set and the corresponding chaining completion code is returned from the TC then the corresponding bit in the Event Missed Register is set. CER.En cannot be set or cleared via software.

Figure 10-109. CER_RN Register

31	30	29	28	27	26	25	24	23	22	21	20	19	18	17	16
E31	E30	E29	E28	E27	E26	E25	E24	E23	E22	E21	E20	E19	E18	E17	E16
R-0h	R-0h	R-0h	R-0h	R-0h	R-0h	R-0h	R-0h	R-0h	R-0h	R-0h	R-0h	R-0h	R-0h	R-0h	R-0h
15	14	13	12	11	10	9	8	7	6	5	4	3	2	1	0
E15	E14	E13	E12	E11	E10	E9	E8	E7	E6	E5	E4	E3	E2	E1	E0
R-0h	R-0h	R-0h	R-0h	R-0h	R-0h	R-0h	R-0h	R-0h	R-0h	R-0h	R-0h	R-0h	R-0h	R-0h	R-0h

Table 10-114. CER_RN Register Field Descriptions

Bit	Field	Type	Reset	Description
31	E31	R	0h	Event #31
30	E30	R	0h	Event #30
29	E29	R	0h	Event #29
28	E28	R	0h	Event #28
27	E27	R	0h	Event #27
26	E26	R	0h	Event #26
25	E25	R	0h	Event #25
24	E24	R	0h	Event #24
23	E23	R	0h	Event #23
22	E22	R	0h	Event #22
21	E21	R	0h	Event #21
20	E20	R	0h	Event #20
19	E19	R	0h	Event #19
18	E18	R	0h	Event #18
17	E17	R	0h	Event #17
16	E16	R	0h	Event #16
15	E15	R	0h	Event #15
14	E14	R	0h	Event #14
13	E13	R	0h	Event #13
12	E12	R	0h	Event #12
11	E11	R	0h	Event #11
10	E10	R	0h	Event #10
9	E9	R	0h	Event #9

Copyright © 2025 Texas Instruments Incorporated

Table 10-114. CER_RN Register Field Descriptions (continued)

Bit	Field	Type	Reset	Description
8	E8	R	0h	Event #8
7	E7	R	0h	Event #7
6	E6	R	0h	Event #6
5	E5	R	0h	Event #5
4	E4	R	0h	Event #4
3	E3	R	0h	Event #3
2	E2	R	0h	Event #2
1	E1	R	0h	Event #1
0	E0	R	0h	Event #0

Copyright © 2025 Texas Instruments Incorporated

10.1.7.1.84 CERH_RN Register (Offset = 201Ch) [reset = 0h]

CERH_RN is shown in Figure 10-110 and described in Table 10-115.

Return to the Table 10-31.

Chained Event Register (High Part): If CERH.En bit is set (regardless of state of EERH.En) then the corresponding DMA channel is prioritized vs. other pending DMA events for submission to the TC. CERH.En bit is set when a chaining completion code is returned from one of the 3PTCs via the completion interface or is generated internally via Early Completion path. CERH.En bit is cleared when the corresponding event is prioritized and serviced. If the CERH.En bit is already set and the corresponding chaining completion code is returned from the TC then the corresponding bit in the Event Missed Register is set. CERH.En cannot be set or cleared via software.

Figure 10-110. CERH_RN Register

31	30	29	28	27	26	25	24	23	22	21	20	19	18	17	16
E63	E62	E61	E60	E59	E58	E57	E56	E55	E54	E53	E52	E51	E50	E49	E48
R-0h	R-0h	R-0h	R-0h	R-0h	R-0h	R-0h	R-0h	R-0h	R-0h	R-0h	R-0h	R-0h	R-0h	R-0h	R-0h
15	14	13	12	11	10	9	8	7	6	5	4	3	2	1	0
E47	E46	E45	E44	E43	E42	E41	E40	E39	E38	E37	E36	E35	E34	E33	E32
R-0h	R-0h	R-0h	R-0h	R-0h	R-0h	R-0h	R-0h	R-0h	R-0h	R-0h	R-0h	R-0h	R-0h	R-0h	R-0h

Table 10-115. CERH_RN Register Field Descriptions

Bit	Field	Type	Reset	Description
31	E63	R	0h	Event #63
30	E62	R	0h	Event #62
29	E61	R	0h	Event #61
28	E60	R	0h	Event #60
27	E59	R	0h	Event #59
26	E58	R	0h	Event #58
25	E57	R	0h	Event #57
24	E56	R	0h	Event #56
23	E55	R	0h	Event #55
22	E54	R	0h	Event #54
21	E53	R	0h	Event #53
20	E52	R	0h	Event #52
19	E51	R	0h	Event #51
18	E50	R	0h	Event #50
17	E49	R	0h	Event #49
16	E48	R	0h	Event #48
15	E47	R	0h	Event #47
14	E46	R	0h	Event #46
13	E45	R	0h	Event #45
12	E44	R	0h	Event #44
11	E43	R	0h	Event #43
10	E42	R	0h	Event #42
9	E41	R	0h	Event #41

Copyright © 2025 Texas Instruments Incorporated

Table 10-115. CERH_RN Register Field Descriptions (continued)

Bit	Field	Type	Reset	Description
8	E40	R	0h	Event #40
7	E39	R	0h	Event #39
6	E38	R	0h	Event #38
5	E37	R	0h	Event #37
4	E36	R	0h	Event #36
3	E35	R	0h	Event #35
2	E34	R	0h	Event #34
1	E33	R	0h	Event #33
0	E32	R	0h	Event #32

Copyright © 2025 Texas Instruments Incorporated

10.1.7.1.85 EER_RN Register (Offset = 2020h) [reset = 0h]

EER_RN is shown in Figure 10-111 and described in Table 10-116.

Return to the Table 10-31.

Event Enable Register: Enables DMA transfers for ER.En pending events. ER.En is set based on externally asserted events (via tpcc_eventN_pi). This register has no effect on Chained Event Register (CER) or Event Set Register (ESR). Note that if a bit is set in ER.En while EER.En is disabled no action is taken. If EER.En is enabled at a later point (and ER.En has not been cleared via SW) then the event will be recognized as a valid 'TR Sync' EER.En is not directly writeable. Events can be enabled via writes to EESR and can be disabled via writes to EECR register. EER.En = 0: ER.En is not enabled to trigger DMA transfers. EER.En = 1: ER.En is enabled to trigger DMA transfers.

Figure 10-111. EER_RN Register

31	30	29	28	27	26	25	24	23	22	21	20	19	18	17	16
E31	E30	E29	E28	E27	E26	E25	E24	E23	E22	E21	E20	E19	E18	E17	E16
R-0h	R-0h	R-0h	R-0h	R-0h	R-0h	R-0h	R-0h	R-0h	R-0h	R-0h	R-0h	R-0h	R-0h	R-0h	R-0h
15	14	13	12	11	10	9	8	7	6	5	4	3	2	1	0
E15	E14	E13	E12	E11	E10	E9	E8	E7	E6	E5	E4	E3	E2	E1	E0
R-0h	R-0h	R-0h	R-0h	R-0h	R-0h	R-0h	R-0h	R-0h	R-0h	R-0h	R-0h	R-0h	R-0h	R-0h	R-0h

Table 10-116. EER_RN Register Field Descriptions

Bit	Field	Type	Reset	Description
31	E31	R	0h	Event #31
30	E30	R	0h	Event #30
29	E29	R	0h	Event #29
28	E28	R	0h	Event #28
27	E27	R	0h	Event #27
26	E26	R	0h	Event #26
25	E25	R	0h	Event #25
24	E24	R	0h	Event #24
23	E23	R	0h	Event #23
22	E22	R	0h	Event #22
21	E21	R	0h	Event #21
20	E20	R	0h	Event #20
19	E19	R	0h	Event #19
18	E18	R	0h	Event #18
17	E17	R	0h	Event #17
16	E16	R	0h	Event #16
15	E15	R	0h	Event #15
14	E14	R	0h	Event #14
13	E13	R	0h	Event #13
12	E12	R	0h	Event #12
11	E11	R	0h	Event #11
10	E10	R	0h	Event #10
9	E9	R	0h	Event #9

Copyright © 2025 Texas Instruments Incorporated

Table 10-116. EER_RN Register Field Descriptions (continued)

Bit	Field	Type	Reset	Description
8	E8	R	0h	Event #8
7	E7	R	0h	Event #7
6	E6	R	0h	Event #6
5	E5	R	0h	Event #5
4	E4	R	0h	Event #4
3	E3	R	0h	Event #3
2	E2	R	0h	Event #2
1	E1	R	0h	Event #1
0	E0	R	0h	Event #0

Copyright © 2025 Texas Instruments Incorporated

10.1.7.1.86 EERH_RN Register (Offset = 2024h) [reset = 0h]

EERH_RN is shown in Figure 10-112 and described in Table 10-117.

Return to the Table 10-31.

Event Enable Register (High Part): Enables DMA transfers for ERH.En pending events. ERH.En is set based on externally asserted events (via tpcc_eventN_pi). This register has no effect on Chained Event Register (CERH) or Event Set Register (ESRH). Note that if a bit is set in ERH.En while EERH.En is disabled no action is taken. If EERH.En is enabled at a later point (and ERH.En has not been cleared via SW) then the event will be recognized as a valid 'TR Sync' EERH.En is not directly writeable. Events can be enabled via writes to EESRH and can be disabled via writes to EECRH register. EERH.En = 0: ER.En is not enabled to trigger DMA transfers. EERH.En = 1: ER.En is enabled to trigger DMA transfers.

Figure 10-112. EERH_RN Register

31	30	29	28	27	26	25	24	23	22	21	20	19	18	17	16
E63	E62	E61	E60	E59	E58	E57	E56	E55	E54	E53	E52	E51	E50	E49	E48
R-0h	R-0h	R-0h	R-0h	R-0h	R-0h	R-0h	R-0h	R-0h	R-0h	R-0h	R-0h	R-0h	R-0h	R-0h	R-0h
15	14	13	12	11	10	9	8	7	6	5	4	3	2	1	0
E47	E46	E45	E44	E43	E42	E41	E40	E39	E38	E37	E36	E35	E34	E33	E32
R-0h	R-0h	R-0h	R-0h	R-0h	R-0h	R-0h	R-0h	R-0h	R-0h	R-0h	R-0h	R-0h	R-0h	R-0h	R-0h

Table 10-117. EERH_RN Register Field Descriptions

Bit	Field	Type	Reset	Description
31	E63	R	0h	Event #63
30	E62	R	0h	Event #62
29	E61	R	0h	Event #61
28	E60	R	0h	Event #60
27	E59	R	0h	Event #59
26	E58	R	0h	Event #58
25	E57	R	0h	Event #57
24	E56	R	0h	Event #56
23	E55	R	0h	Event #55
22	E54	R	0h	Event #54
21	E53	R	0h	Event #53
20	E52	R	0h	Event #52
19	E51	R	0h	Event #51
18	E50	R	0h	Event #50
17	E49	R	0h	Event #49
16	E48	R	0h	Event #48
15	E47	R	0h	Event #47
14	E46	R	0h	Event #46
13	E45	R	0h	Event #45
12	E44	R	0h	Event #44
11	E43	R	0h	Event #43
10	E42	R	0h	Event #42
9	E41	R	0h	Event #41

Copyright © 2025 Texas Instruments Incorporated

Table 10-117. EERH_RN Register Field Descriptions (continued)

Bit	Field	Type	Reset	Description
8	E40	R	0h	Event #40
7	E39	R	0h	Event #39
6	E38	R	0h	Event #38
5	E37	R	0h	Event #37
4	E36	R	0h	Event #36
3	E35	R	0h	Event #35
2	E34	R	0h	Event #34
1	E33	R	0h	Event #33
0	E32	R	0h	Event #32

Copyright © 2025 Texas Instruments Incorporated

10.1.7.1.87 EECR_RN Register (Offset = 2028h) [reset = 0h]

EECR_RN is shown in Figure 10-113 and described in Table 10-118.

Return to the Table 10-31.

Event Enable Clear Register: CPU write of '1' to the EECR.En bit causes the EER.En bit to be cleared. CPU write of '0' has no effect..

Figure 10-113. EECR_RN Register

31	30	29	28	27	26	25	24	23	22	21	20	19	18	17	16
E31	E30	E29	E28	E27	E26	E25	E24	E23	E22	E21	E20	E19	E18	E17	E16
W-0h	W-0h	W-0h	W-0h	W-0h	W-0h	W-0h	W-0h	W-0h	W-0h	W-0h	W-0h	W-0h	W-0h	W-0h	W-0h
15	14	13	12	11	10	9	8	7	6	5	4	3	2	1	0
E15	E14	E13	E12	E11	E10	E9	E8	E7	E6	E5	E4	E3	E2	E1	E0
W-0h	W-0h	W-0h	W-0h	W-0h	W-0h	W-0h	W-0h	W-0h	W-0h	W-0h	W-0h	W-0h	W-0h	W-0h	W-0h

Table 10-118. EECR_RN Register Field Descriptions

Bit	Field	Type	Reset	Description
31	E31	W	0h	Event #31
30	E30	W	0h	Event #30
29	E29	W	0h	Event #29
28	E28	W	0h	Event #28
27	E27	W	0h	Event #27
26	E26	W	0h	Event #26
25	E25	W	0h	Event #25
24	E24	W	0h	Event #24
23	E23	W	0h	Event #23
22	E22	W	0h	Event #22
21	E21	W	0h	Event #21
20	E20	W	0h	Event #20
19	E19	W	0h	Event #19
18	E18	W	0h	Event #18
17	E17	W	0h	Event #17
16	E16	W	0h	Event #16
15	E15	W	0h	Event #15
14	E14	W	0h	Event #14
13	E13	W	0h	Event #13
12	E12	W	0h	Event #12
11	E11	W	0h	Event #11
10	E10	W	0h	Event #10
9	E9	W	0h	Event #9
8	E8	W	0h	Event #8
7	E7	W	0h	Event #7
6	E6	W	0h	Event #6

Copyright © 2025 Texas Instruments Incorporated

Table 10-118. EECR_RN Register Field Descriptions (continued)

Bit	Field	Type	Reset	Description
5	E5	W	0h	Event #5
4	E4	W	0h	Event #4
3	E3	W	0h	Event #3
2	E2	W	0h	Event #2
1	E1	W	0h	Event #1
0	E0	W	0h	Event #0

Copyright © 2025 Texas Instruments Incorporated

10.1.7.1.88 EECRH_RN Register (Offset = 202Ch) [reset = 0h]

EECRH_RN is shown in Figure 10-114 and described in Table 10-119.

Return to the Table 10-31.

Event Enable Clear Register (High Part): CPU write of '1' to the EECRH.En bit causes the EERH.En bit to be cleared. CPU write of '0' has no effect..

Figure 10-114. EECRH_RN Register

31	30	29	28	27	26	25	24	23	22	21	20	19	18	17	16
E63	E62	E61	E60	E59	E58	E57	E56	E55	E54	E53	E52	E51	E50	E49	E48
W-0h	W-0h	W-0h	W-0h	W-0h	W-0h	W-0h	W-0h	W-0h	W-0h	W-0h	W-0h	W-0h	W-0h	W-0h	W-0h
15	14	13	12	11	10	9	8	7	6	5	4	3	2	1	0
E47	E46	E45	E44	E43	E42	E41	E40	E39	E38	E37	E36	E35	E34	E33	E32
W-0h	W-0h	W-0h	W-0h	W-0h	W-0h	W-0h	W-0h	W-0h	W-0h	W-0h	W-0h	W-0h	W-0h	W-0h	W-0h

Table 10-119. EECRH_RN Register Field Descriptions

Bit	Field	Type	Reset	Description
31	E63	W	0h	Event #63
30	E62	W	0h	Event #62
29	E61	W	0h	Event #61
28	E60	W	0h	Event #60
27	E59	W	0h	Event #59
26	E58	W	0h	Event #58
25	E57	W	0h	Event #57
24	E56	W	0h	Event #56
23	E55	W	0h	Event #55
22	E54	W	0h	Event #54
21	E53	W	0h	Event #53
20	E52	W	0h	Event #52
19	E51	W	0h	Event #51
18	E50	W	0h	Event #50
17	E49	W	0h	Event #49
16	E48	W	0h	Event #48
15	E47	W	0h	Event #47
14	E46	W	0h	Event #46
13	E45	W	0h	Event #45
12	E44	W	0h	Event #44
11	E43	W	0h	Event #43
10	E42	W	0h	Event #42
9	E41	W	0h	Event #41
8	E40	W	0h	Event #40
7	E39	W	0h	Event #39
6	E38	W	0h	Event #38

Copyright © 2025 Texas Instruments Incorporated

Table 10-119. EECRH_RN Register Field Descriptions (continued)

Bit	Field	Type	Reset	Description
5	E37	W	0h	Event #37
4	E36	W	0h	Event #36
3	E35	W	0h	Event #35
2	E34	W	0h	Event #34
1	E33	W	0h	Event #33
0	E32	W	0h	Event #32

Copyright © 2025 Texas Instruments Incorporated

10.1.7.1.89 EESR_RN Register (Offset = 2030h) [reset = 0h]

EESR_RN is shown in Figure 10-115 and described in Table 10-120.

Return to the Table 10-31.

Event Enable Set Register: CPU write of '1' to the EESR.En bit causes the EER.En bit to be set. CPU write of '0' has no effect..

Figure 10-115. EESR_RN Register

31	30	29	28	27	26	25	24	23	22	21	20	19	18	17	16
E31	E30	E29	E28	E27	E26	E25	E24	E23	E22	E21	E20	E19	E18	E17	E16
W-0h	W-0h	W-0h	W-0h	W-0h	W-0h	W-0h	W-0h	W-0h	W-0h	W-0h	W-0h	W-0h	W-0h	W-0h	W-0h
15	14	13	12	11	10	9	8	7	6	5	4	3	2	1	0
E15	E14	E13	E12	E11	E10	E9	E8	E7	E6	E5	E4	E3	E2	E1	E0
W-0h	W-0h	W-0h	W-0h	W-0h	W-0h	W-0h	W-0h	W-0h	W-0h	W-0h	W-0h	W-0h	W-0h	W-0h	W-0h

Table 10-120. EESR_RN Register Field Descriptions

Bit	Field	Type	Reset	Description
31	E31	W	0h	Event #31
30	E30	W	0h	Event #30
29	E29	W	0h	Event #29
28	E28	W	0h	Event #28
27	E27	W	0h	Event #27
26	E26	W	0h	Event #26
25	E25	W	0h	Event #25
24	E24	W	0h	Event #24
23	E23	W	0h	Event #23
22	E22	W	0h	Event #22
21	E21	W	0h	Event #21
20	E20	W	0h	Event #20
19	E19	W	0h	Event #19
18	E18	W	0h	Event #18
17	E17	W	0h	Event #17
16	E16	W	0h	Event #16
15	E15	W	0h	Event #15
14	E14	W	0h	Event #14
13	E13	W	0h	Event #13
12	E12	W	0h	Event #12
11	E11	W	0h	Event #11
10	E10	W	0h	Event #10
9	E9	W	0h	Event #9
8	E8	W	0h	Event #8
7	E7	W	0h	Event #7
6	E6	W	0h	Event #6

Copyright © 2025 Texas Instruments Incorporated

Table 10-120. EESR_RN Register Field Descriptions (continued)

Bit	Field	Type	Reset	Description
5	E5	W	0h	Event #5
4	E4	W	0h	Event #4
3	E3	W	0h	Event #3
2	E2	W	0h	Event #2
1	E1	W	0h	Event #1
0	E0	W	0h	Event #0

Copyright © 2025 Texas Instruments Incorporated

10.1.7.1.90 EESRH_RN Register (Offset = 2034h) [reset = 0h]

EESRH_RN is shown in Figure 10-116 and described in Table 10-121.

Return to the Table 10-31.

Event Enable Set Register (High Part): CPU write of '1' to the EESRH.En bit causes the EERH.En bit to be set. CPU write of '0' has no effect..

Figure 10-116. EESRH_RN Register

31	30	29	28	27	26	25	24	23	22	21	20	19	18	17	16
E63	E62	E61	E60	E59	E58	E57	E56	E55	E54	E53	E52	E51	E50	E49	E48
W-0h	W-0h	W-0h	W-0h	W-0h	W-0h	W-0h	W-0h	W-0h	W-0h	W-0h	W-0h	W-0h	W-0h	W-0h	W-0h
15	14	13	12	11	10	9	8	7	6	5	4	3	2	1	0
E47	E46	E45	E44	E43	E42	E41	E40	E39	E38	E37	E36	E35	E34	E33	E32
W-0h	W-0h	W-0h	W-0h	W-0h	W-0h	W-0h	W-0h	W-0h	W-0h	W-0h	W-0h	W-0h	W-0h	W-0h	W-0h

Table 10-121. EESRH_RN Register Field Descriptions

Bit	Field	Type	Reset	Description
31	E63	W	0h	Event #63
30	E62	W	0h	Event #62
29	E61	W	0h	Event #61
28	E60	W	0h	Event #60
27	E59	W	0h	Event #59
26	E58	W	0h	Event #58
25	E57	W	0h	Event #57
24	E56	W	0h	Event #56
23	E55	W	0h	Event #55
22	E54	W	0h	Event #54
21	E53	W	0h	Event #53
20	E52	W	0h	Event #52
19	E51	W	0h	Event #51
18	E50	W	0h	Event #50
17	E49	W	0h	Event #49
16	E48	W	0h	Event #48
15	E47	W	0h	Event #47
14	E46	W	0h	Event #46
13	E45	W	0h	Event #45
12	E44	W	0h	Event #44
11	E43	W	0h	Event #43
10	E42	W	0h	Event #42
9	E41	W	0h	Event #41
8	E40	W	0h	Event #40
7	E39	W	0h	Event #39
6	E38	W	0h	Event #38

Copyright © 2025 Texas Instruments Incorporated

Table 10-121. EESRH_RN Register Field Descriptions (continued)

Bit	Field	Type	Reset	Description
5	E37	W	0h	Event #37
4	E36	W	0h	Event #36
3	E35	W	0h	Event #35
2	E34	W	0h	Event #34
1	E33	W	0h	Event #33
0	E32	W	0h	Event #32

Copyright © 2025 Texas Instruments Incorporated

10.1.7.1.91 SER_RN Register (Offset = 2038h) [reset = 0h]

SER_RN is shown in Figure 10-117 and described in Table 10-122.

Return to the Table 10-31.

Secondary Event Register: The secondary event register is used along with the Event Register (ER) to provide information on the state of an Event. En = 0 : Event is not currently in the Event Queue. En = 1 : Event is currently stored in Event Queue. Event arbiter will not prioritize additional events.

Figure 10-117. SER_RN Register

31	30	29	28	27	26	25	24	23	22	21	20	19	18	17	16
E31	E30	E29	E28	E27	E26	E25	E24	E23	E22	E21	E20	E19	E18	E17	E16
R-0h	R-0h	R-0h	R-0h	R-0h	R-0h	R-0h	R-0h	R-0h	R-0h	R-0h	R-0h	R-0h	R-0h	R-0h	R-0h
15	14	13	12	11	10	9	8	7	6	5	4	3	2	1	0
E15	E14	E13	E12	E11	E10	E9	E8	E7	E6	E5	E4	E3	E2	E1	E0
R-0h	R-0h	R-0h	R-0h	R-0h	R-0h	R-0h	R-0h	R-0h	R-0h	R-0h	R-0h	R-0h	R-0h	R-0h	R-0h

Table 10-122. SER_RN Register Field Descriptions

Bit	Field	Type	Reset	Description
31	E31	R	0h	Event #31
30	E30	R	0h	Event #30
29	E29	R	0h	Event #29
28	E28	R	0h	Event #28
27	E27	R	0h	Event #27
26	E26	R	0h	Event #26
25	E25	R	0h	Event #25
24	E24	R	0h	Event #24
23	E23	R	0h	Event #23
22	E22	R	0h	Event #22
21	E21	R	0h	Event #21
20	E20	R	0h	Event #20
19	E19	R	0h	Event #19
18	E18	R	0h	Event #18
17	E17	R	0h	Event #17
16	E16	R	0h	Event #16
15	E15	R	0h	Event #15
14	E14	R	0h	Event #14
13	E13	R	0h	Event #13
12	E12	R	0h	Event #12
11	E11	R	0h	Event #11
10	E10	R	0h	Event #10
9	E9	R	0h	Event #9
8	E8	R	0h	Event #8
7	E7	R	0h	Event #7
6	E6	R	0h	Event #6

Copyright © 2025 Texas Instruments Incorporated

Table 10-122. SER_RN Register Field Descriptions (continued)

Bit	Field	Type	Reset	Description
5	E5	R	0h	Event #5
4	E4	R	0h	Event #4
3	E3	R	0h	Event #3
2	E2	R	0h	Event #2
1	E1	R	0h	Event #1
0	E0	R	0h	Event #0

Copyright © 2025 Texas Instruments Incorporated

10.1.7.1.92 SERH_RN Register (Offset = 203Ch) [reset = 0h]

SERH_RN is shown in Figure 10-118 and described in Table 10-123.

Return to the Table 10-31.

Secondary Event Register (High Part): The secondary event register is used along with the Event Register (ERH) to provide information on the state of an Event. En = 0 : Event is not currently in the Event Queue. En = 1 : Event is currently stored in Event Queue. Event arbiter will not prioritize additional events.

Figure 10-118. SERH_RN Register

31	30	29	28	27	26	25	24	23	22	21	20	19	18	17	16
E63	E62	E61	E60	E59	E58	E57	E56	E55	E54	E53	E52	E51	E50	E49	E48
R-0h	R-0h	R-0h	R-0h	R-0h	R-0h	R-0h	R-0h	R-0h	R-0h	R-0h	R-0h	R-0h	R-0h	R-0h	R-0h
15	14	13	12	11	10	9	8	7	6	5	4	3	2	1	0
E47	E46	E45	E44	E43	E42	E41	E40	E39	E38	E37	E36	E35	E34	E33	E32
R-0h	R-0h	R-0h	R-0h	R-0h	R-0h	R-0h	R-0h	R-0h	R-0h	R-0h	R-0h	R-0h	R-0h	R-0h	R-0h

Table 10-123. SERH_RN Register Field Descriptions

Bit	Field	Type	Reset	Description
31	E63	R	0h	Event #63
30	E62	R	0h	Event #62
29	E61	R	0h	Event #61
28	E60	R	0h	Event #60
27	E59	R	0h	Event #59
26	E58	R	0h	Event #58
25	E57	R	0h	Event #57
24	E56	R	0h	Event #56
23	E55	R	0h	Event #55
22	E54	R	0h	Event #54
21	E53	R	0h	Event #53
20	E52	R	0h	Event #52
19	E51	R	0h	Event #51
18	E50	R	0h	Event #50
17	E49	R	0h	Event #49
16	E48	R	0h	Event #48
15	E47	R	0h	Event #47
14	E46	R	0h	Event #46
13	E45	R	0h	Event #45
12	E44	R	0h	Event #44
11	E43	R	0h	Event #43
10	E42	R	0h	Event #42
9	E41	R	0h	Event #41
8	E40	R	0h	Event #40
7	E39	R	0h	Event #39
6	E38	R	0h	Event #38

Copyright © 2025 Texas Instruments Incorporated

Table 10-123. SERH_RN Register Field Descriptions (continued)

Bit	Field	Type	Reset	Description
5	E37	R	0h	Event #37
4	E36	R	0h	Event #36
3	E35	R	0h	Event #35
2	E34	R	0h	Event #34
1	E33	R	0h	Event #33
0	E32	R	0h	Event #32

Copyright © 2025 Texas Instruments Incorporated

10.1.7.1.93 SECR_RN Register (Offset = 2040h) [reset = 0h]

SECR_RN is shown in Figure 10-119 and described in Table 10-124.

Return to the Table 10-31.

Secondary Event Clear Register: The secondary event clear register is used to clear the status of the SER registers. CPU write of '1' to the SECR.En bit clears the SER register. CPU write of '0' has no effect.

Figure 10-119. SECR_RN Register

31	30	29	28	27	26	25	24	23	22	21	20	19	18	17	16
E31	E30	E29	E28	E27	E26	E25	E24	E23	E22	E21	E20	E19	E18	E17	E16
W-0h	W-0h	W-0h	W-0h	W-0h	W-0h	W-0h	W-0h	W-0h	W-0h	W-0h	W-0h	W-0h	W-0h	W-0h	W-0h
15	14	13	12	11	10	9	8	7	6	5	4	3	2	1	0
E15	E14	E13	E12	E11	E10	E9	E8	E7	E6	E5	E4	E3	E2	E1	E0
W-0h	W-0h	W-0h	W-0h	W-0h	W-0h	W-0h	W-0h	W-0h	W-0h	W-0h	W-0h	W-0h	W-0h	W-0h	W-0h

Table 10-124. SECR_RN Register Field Descriptions

Bit	Field	Type	Reset	Description
31	E31	W	0h	Event #31
30	E30	W	0h	Event #30
29	E29	W	0h	Event #29
28	E28	W	0h	Event #28
27	E27	W	0h	Event #27
26	E26	W	0h	Event #26
25	E25	W	0h	Event #25
24	E24	W	0h	Event #24
23	E23	W	0h	Event #23
22	E22	W	0h	Event #22
21	E21	W	0h	Event #21
20	E20	W	0h	Event #20
19	E19	W	0h	Event #19
18	E18	W	0h	Event #18
17	E17	W	0h	Event #17
16	E16	W	0h	Event #16
15	E15	W	0h	Event #15
14	E14	W	0h	Event #14
13	E13	W	0h	Event #13
12	E12	W	0h	Event #12
11	E11	W	0h	Event #11
10	E10	W	0h	Event #10
9	E9	W	0h	Event #9
8	E8	W	0h	Event #8
7	E7	W	0h	Event #7
6	E6	W	0h	Event #6

Copyright © 2025 Texas Instruments Incorporated

Table 10-124. SECR_RN Register Field Descriptions (continued)

Bit	Field	Type	Reset	Description
5	E5	W	0h	Event #5
4	E4	W	0h	Event #4
3	E3	W	0h	Event #3
2	E2	W	0h	Event #2
1	E1	W	0h	Event #1
0	E0	W	0h	Event #0

Copyright © 2025 Texas Instruments Incorporated

10.1.7.1.94 SECRH_RN Register (Offset = 2044h) [reset = 0h]

SECRH_RN is shown in Figure 10-120 and described in Table 10-125.

Return to the Table 10-31.

Secondary Event Clear Register (High Part): The secondary event clear register is used to clear the status of the SERH registers. CPU write of '1' to the SECRH.En bit clears the SERH register. CPU write of '0' has no effect.

Figure 10-120. SECRH_RN Register

31	30	29	28	27	26	25	24	23	22	21	20	19	18	17	16
E63	E62	E61	E60	E59	E58	E57	E56	E55	E54	E53	E52	E51	E50	E49	E48
W-0h	W-0h	W-0h	W-0h	W-0h	W-0h	W-0h	W-0h	W-0h	W-0h	W-0h	W-0h	W-0h	W-0h	W-0h	W-0h
15	14	13	12	11	10	9	8	7	6	5	4	3	2	1	0
E47	E46	E45	E44	E43	E42	E41	E40	E39	E38	E37	E36	E35	E34	E33	E32
W-0h	W-0h	W-0h	W-0h	W-0h	W-0h	W-0h	W-0h	W-0h	W-0h	W-0h	W-0h	W-0h	W-0h	W-0h	W-0h

Table 10-125. SECRH_RN Register Field Descriptions

Bit	Field	Type	Reset	Description
31	E63	W	0h	Event #63
30	E62	W	0h	Event #62
29	E61	W	0h	Event #61
28	E60	W	0h	Event #60
27	E59	W	0h	Event #59
26	E58	W	0h	Event #58
25	E57	W	0h	Event #57
24	E56	W	0h	Event #56
23	E55	W	0h	Event #55
22	E54	W	0h	Event #54
21	E53	W	0h	Event #53
20	E52	W	0h	Event #52
19	E51	W	0h	Event #51
18	E50	W	0h	Event #50
17	E49	W	0h	Event #49
16	E48	W	0h	Event #48
15	E47	W	0h	Event #47
14	E46	W	0h	Event #46
13	E45	W	0h	Event #45
12	E44	W	0h	Event #44
11	E43	W	0h	Event #43
10	E42	W	0h	Event #42
9	E41	W	0h	Event #41
8	E40	W	0h	Event #40
7	E39	W	0h	Event #39
6	E38	W	0h	Event #38

Copyright © 2025 Texas Instruments Incorporated

Table 10-125. SECRH_RN Register Field Descriptions (continued)

Bit	Field	Type	Reset	Description
5	E37	W	0h	Event #37
4	E36	W	0h	Event #36
3	E35	W	0h	Event #35
2	E34	W	0h	Event #34
1	E33	W	0h	Event #33
0	E32	W	0h	Event #32

Copyright © 2025 Texas Instruments Incorporated

10.1.7.1.95 IER_RN Register (Offset = 2050h) [reset = 0h]

IER_RN is shown in Figure 10-121 and described in Table 10-126.

Return to the Table 10-31.

Int Enable Register: IER.In is not directly writeable. Interrupts can be enabled via writes to IESR and can be disabled via writes to IECR register. IER.In = 0: IPR.In is NOT enabled for interrupts. IER.In = 1: IPR.In IS enabled for interrupts.

Figure 10-121. IER_RN Register

31	30	29	28	27	26	25	24	23	22	21	20	19	18	17	16
I31	I30	I29	I28	I27	I26	I25	I24	I23	I22	I21	I20	I19	I18	I17	I16
R-0h	R-0h	R-0h	R-0h	R-0h	R-0h	R-0h	R-0h	R-0h	R-0h	R-0h	R-0h	R-0h	R-0h	R-0h	R-0h
15	14	13	12	11	10	9	8	7	6	5	4	3	2	1	0
I15	I14	I13	I12	I11	I10	I9	I8	I7	I6	I5	I4	I3	I2	I1	I0
R-0h	R-0h	R-0h	R-0h	R-0h	R-0h	R-0h	R-0h	R-0h	R-0h	R-0h	R-0h	R-0h	R-0h	R-0h	R-0h

Table 10-126. IER_RN Register Field Descriptions

Bit	Field	Type	Reset	Description
31	I31	R	0h	Interrupt associated with TCC #31
30	I30	R	0h	Interrupt associated with TCC #30
29	I29	R	0h	Interrupt associated with TCC #29
28	I28	R	0h	Interrupt associated with TCC #28
27	I27	R	0h	Interrupt associated with TCC #27
26	I26	R	0h	Interrupt associated with TCC #26
25	I25	R	0h	Interrupt associated with TCC #25
24	I24	R	0h	Interrupt associated with TCC #24
23	I23	R	0h	Interrupt associated with TCC #23
22	I22	R	0h	Interrupt associated with TCC #22
21	I21	R	0h	Interrupt associated with TCC #21
20	I20	R	0h	Interrupt associated with TCC #20
19	I19	R	0h	Interrupt associated with TCC #19
18	I18	R	0h	Interrupt associated with TCC #18
17	I17	R	0h	Interrupt associated with TCC #17
16	I16	R	0h	Interrupt associated with TCC #16
15	I15	R	0h	Interrupt associated with TCC #15
14	I14	R	0h	Interrupt associated with TCC #14
13	I13	R	0h	Interrupt associated with TCC #13
12	I12	R	0h	Interrupt associated with TCC #12
11	I11	R	0h	Interrupt associated with TCC #11
10	I10	R	0h	Interrupt associated with TCC #10
9	I9	R	0h	Interrupt associated with TCC #9
8	I8	R	0h	Interrupt associated with TCC #8
7	I7	R	0h	Interrupt associated with TCC #7
6	I6	R	0h	Interrupt associated with TCC #6

Copyright © 2025 Texas Instruments Incorporated

Table 10-126. IER_RN Register Field Descriptions (continued)

Bit	Field	Type	Reset	Description
5	I5	R	0h	Interrupt associated with TCC #5
4	I4	R	0h	Interrupt associated with TCC #4
3	I3	R	0h	Interrupt associated with TCC #3
2	I2	R	0h	Interrupt associated with TCC #2
1	I1	R	0h	Interrupt associated with TCC #1
0	I0	R	0h	Interrupt associated with TCC #0

Copyright © 2025 Texas Instruments Incorporated

10.1.7.1.96 IERH_RN Register (Offset = 2054h) [reset = 0h]

IERH_RN is shown in Figure 10-122 and described in Table 10-127.

Return to the Table 10-31.

Int Enable Register (High Part): IERH.In is not directly writeable. Interrupts can be enabled via writes to IESRH and can be disabled via writes to IECRH register. IERH.In = 0: IPRH.In is NOT enabled for interrupts. IERH.In = 1: IPRH.In IS enabled for interrupts.

Figure 10-122. IERH_RN Register

31	30	29	28	27	26	25	24	23	22	21	20	19	18	17	16
I63	I62	I61	I60	I59	I58	I57	I56	I55	I54	I53	I52	I51	I50	I49	I48
R-0h	R-0h	R-0h	R-0h	R-0h	R-0h	R-0h	R-0h	R-0h	R-0h	R-0h	R-0h	R-0h	R-0h	R-0h	R-0h
15	14	13	12	11	10	9	8	7	6	5	4	3	2	1	0
I47	I46	I45	I44	I43	I42	I41	I40	I39	I38	I37	I36	I35	I34	I33	I32
R-0h	R-0h	R-0h	R-0h	R-0h	R-0h	R-0h	R-0h	R-0h	R-0h	R-0h	R-0h	R-0h	R-0h	R-0h	R-0h

Table 10-127. IERH_RN Register Field Descriptions

Bit	Field	Type	Reset	Description
31	I63	R	0h	Interrupt associated with TCC #63
30	I62	R	0h	Interrupt associated with TCC #62
29	I61	R	0h	Interrupt associated with TCC #61
28	I60	R	0h	Interrupt associated with TCC #60
27	I59	R	0h	Interrupt associated with TCC #59
26	I58	R	0h	Interrupt associated with TCC #58
25	I57	R	0h	Interrupt associated with TCC #57
24	I56	R	0h	Interrupt associated with TCC #56
23	I55	R	0h	Interrupt associated with TCC #55
22	I54	R	0h	Interrupt associated with TCC #54
21	I53	R	0h	Interrupt associated with TCC #53
20	I52	R	0h	Interrupt associated with TCC #52
19	I51	R	0h	Interrupt associated with TCC #51
18	I50	R	0h	Interrupt associated with TCC #50
17	I49	R	0h	Interrupt associated with TCC #49
16	I48	R	0h	Interrupt associated with TCC #48
15	I47	R	0h	Interrupt associated with TCC #47
14	I46	R	0h	Interrupt associated with TCC #46
13	I45	R	0h	Interrupt associated with TCC #45
12	I44	R	0h	Interrupt associated with TCC #44
11	I43	R	0h	Interrupt associated with TCC #43
10	I42	R	0h	Interrupt associated with TCC #42
9	I41	R	0h	Interrupt associated with TCC #41
8	I40	R	0h	Interrupt associated with TCC #40
7	I39	R	0h	Interrupt associated with TCC #39
6	I38	R	0h	Interrupt associated with TCC #38

Copyright © 2025 Texas Instruments Incorporated

Table 10-127. IERH_RN Register Field Descriptions (continued)

Bit	Field	Type	Reset	Description
5	I37	R	0h	Interrupt associated with TCC #37
4	I36	R	0h	Interrupt associated with TCC #36
3	I35	R	0h	Interrupt associated with TCC #35
2	I34	R	0h	Interrupt associated with TCC #34
1	I33	R	0h	Interrupt associated with TCC #33
0	I32	R	0h	Interrupt associated with TCC #32

Copyright © 2025 Texas Instruments Incorporated

10.1.7.1.97 IECR_RN Register (Offset = 2058h) [reset = 0h]

IECR_RN is shown in Figure 10-123 and described in Table 10-128.

Return to the Table 10-31.

Int Enable Clear Register: CPU write of '1' to the IECR.In bit causes the IER.In bit to be cleared. CPU write of '0' has no effect..

Figure 10-123. IECR_RN Register

31	30	29	28	27	26	25	24	23	22	21	20	19	18	17	16
I31	I30	I29	I28	I27	I26	I25	I24	I23	I22	I21	I20	I19	I18	I17	I16
W-0h	W-0h	W-0h	W-0h	W-0h	W-0h	W-0h	W-0h	W-0h	W-0h	W-0h	W-0h	W-0h	W-0h	W-0h	W-0h
15	14	13	12	11	10	9	8	7	6	5	4	3	2	1	0
I15	I14	I13	I12	I11	I10	I9	I8	I7	I6	I5	I4	I3	I2	I1	I0
W-0h	W-0h	W-0h	W-0h	W-0h	W-0h	W-0h	W-0h	W-0h	W-0h	W-0h	W-0h	W-0h	W-0h	W-0h	W-0h

Table 10-128. IECR_RN Register Field Descriptions

Bit	Field	Type	Reset	Description
31	I31	W	0h	Interrupt associated with TCC #31
30	I30	W	0h	Interrupt associated with TCC #30
29	I29	W	0h	Interrupt associated with TCC #29
28	I28	W	0h	Interrupt associated with TCC #28
27	I27	W	0h	Interrupt associated with TCC #27
26	I26	W	0h	Interrupt associated with TCC #26
25	I25	W	0h	Interrupt associated with TCC #25
24	I24	W	0h	Interrupt associated with TCC #24
23	I23	W	0h	Interrupt associated with TCC #23
22	I22	W	0h	Interrupt associated with TCC #22
21	I21	W	0h	Interrupt associated with TCC #21
20	I20	W	0h	Interrupt associated with TCC #20
19	I19	W	0h	Interrupt associated with TCC #19
18	I18	W	0h	Interrupt associated with TCC #18
17	I17	W	0h	Interrupt associated with TCC #17
16	I16	W	0h	Interrupt associated with TCC #16
15	I15	W	0h	Interrupt associated with TCC #15
14	I14	W	0h	Interrupt associated with TCC #14
13	I13	W	0h	Interrupt associated with TCC #13
12	I12	W	0h	Interrupt associated with TCC #12
11	I11	W	0h	Interrupt associated with TCC #11
10	I10	W	0h	Interrupt associated with TCC #10
9	I9	W	0h	Interrupt associated with TCC #9
8	I8	W	0h	Interrupt associated with TCC #8
7	I7	W	0h	Interrupt associated with TCC #7
6	I6	W	0h	Interrupt associated with TCC #6

Copyright © 2025 Texas Instruments Incorporated

Table 10-128. IECR_RN Register Field Descriptions (continued)

Bit	Field	Type	Reset	Description
5	I5	W	0h	Interrupt associated with TCC #5
4	I4	W	0h	Interrupt associated with TCC #4
3	I3	W	0h	Interrupt associated with TCC #3
2	I2	W	0h	Interrupt associated with TCC #2
1	I1	W	0h	Interrupt associated with TCC #1
0	I0	W	0h	Interrupt associated with TCC #0

Copyright © 2025 Texas Instruments Incorporated

10.1.7.1.98 IECRH_RN Register (Offset = 205Ch) [reset = 0h]

IECRH_RN is shown in Figure 10-124 and described in Table 10-129.

Return to the Table 10-31.

Int Enable Clear Register (High Part): CPU write of '1' to the IECRH.In bit causes the IERH.In bit to be cleared. CPU write of '0' has no effect..

Figure 10-124. IECRH_RN Register

31	30	29	28	27	26	25	24	23	22	21	20	19	18	17	16
I63	I62	I61	I60	I59	I58	I57	I56	I55	I54	I53	I52	I51	I50	I49	I48
W-0h	W-0h	W-0h	W-0h	W-0h	W-0h	W-0h	W-0h	W-0h	W-0h	W-0h	W-0h	W-0h	W-0h	W-0h	W-0h
15	14	13	12	11	10	9	8	7	6	5	4	3	2	1	0
I47	I46	I45	I44	I43	I42	I41	I40	I39	I38	I37	I36	I35	I34	I33	I32
W-0h	W-0h	W-0h	W-0h	W-0h	W-0h	W-0h	W-0h	W-0h	W-0h	W-0h	W-0h	W-0h	W-0h	W-0h	W-0h

Table 10-129. IECRH_RN Register Field Descriptions

Bit	Field	Type	Reset	Description
31	I63	W	0h	Interrupt associated with TCC #63
30	I62	W	0h	Interrupt associated with TCC #62
29	I61	W	0h	Interrupt associated with TCC #61
28	I60	W	0h	Interrupt associated with TCC #60
27	I59	W	0h	Interrupt associated with TCC #59
26	I58	W	0h	Interrupt associated with TCC #58
25	I57	W	0h	Interrupt associated with TCC #57
24	I56	W	0h	Interrupt associated with TCC #56
23	I55	W	0h	Interrupt associated with TCC #55
22	I54	W	0h	Interrupt associated with TCC #54
21	I53	W	0h	Interrupt associated with TCC #53
20	I52	W	0h	Interrupt associated with TCC #52
19	I51	W	0h	Interrupt associated with TCC #51
18	I50	W	0h	Interrupt associated with TCC #50
17	I49	W	0h	Interrupt associated with TCC #49
16	I48	W	0h	Interrupt associated with TCC #48
15	I47	W	0h	Interrupt associated with TCC #47
14	I46	W	0h	Interrupt associated with TCC #46
13	I45	W	0h	Interrupt associated with TCC #45
12	I44	W	0h	Interrupt associated with TCC #44
11	I43	W	0h	Interrupt associated with TCC #43
10	I42	W	0h	Interrupt associated with TCC #42
9	I41	W	0h	Interrupt associated with TCC #41
8	I40	W	0h	Interrupt associated with TCC #40
7	I39	W	0h	Interrupt associated with TCC #39
6	I38	W	0h	Interrupt associated with TCC #38

Copyright © 2025 Texas Instruments Incorporated

Table 10-129. IECRH_RN Register Field Descriptions (continued)

Bit	Field	Type	Reset	Description
5	I37	W	0h	Interrupt associated with TCC #37
4	I36	W	0h	Interrupt associated with TCC #36
3	I35	W	0h	Interrupt associated with TCC #35
2	I34	W	0h	Interrupt associated with TCC #34
1	I33	W	0h	Interrupt associated with TCC #33
0	I32	W	0h	Interrupt associated with TCC #32

Copyright © 2025 Texas Instruments Incorporated

10.1.7.1.99 IESR_RN Register (Offset = 2060h) [reset = 0h]

IESR_RN is shown in Figure 10-125 and described in Table 10-130.

Return to the Table 10-31.

Int Enable Set Register: CPU write of '1' to the IESR.In bit causes the IESR.In bit to be set. CPU write of '0' has no effect..

Figure 10-125. IESR_RN Register

31	30	29	28	27	26	25	24	23	22	21	20	19	18	17	16
I31	I30	I29	I28	I27	I26	I25	I24	I23	I22	I21	I20	I19	I18	I17	I16
W-0h	W-0h	W-0h	W-0h	W-0h	W-0h	W-0h	W-0h	W-0h	W-0h	W-0h	W-0h	W-0h	W-0h	W-0h	W-0h
15	14	13	12	11	10	9	8	7	6	5	4	3	2	1	0
I15	I14	I13	I12	I11	I10	I9	I8	I7	I6	I5	I4	I3	I2	I1	I0
W-0h	W-0h	W-0h	W-0h	W-0h	W-0h	W-0h	W-0h	W-0h	W-0h	W-0h	W-0h	W-0h	W-0h	W-0h	W-0h

Table 10-130. IESR_RN Register Field Descriptions

Bit	Field	Type	Reset	Description
31	I31	W	0h	Interrupt associated with TCC #31
30	I30	W	0h	Interrupt associated with TCC #30
29	I29	W	0h	Interrupt associated with TCC #29
28	I28	W	0h	Interrupt associated with TCC #28
27	I27	W	0h	Interrupt associated with TCC #27
26	I26	W	0h	Interrupt associated with TCC #26
25	I25	W	0h	Interrupt associated with TCC #25
24	I24	W	0h	Interrupt associated with TCC #24
23	I23	W	0h	Interrupt associated with TCC #23
22	I22	W	0h	Interrupt associated with TCC #22
21	I21	W	0h	Interrupt associated with TCC #21
20	I20	W	0h	Interrupt associated with TCC #20
19	I19	W	0h	Interrupt associated with TCC #19
18	I18	W	0h	Interrupt associated with TCC #18
17	I17	W	0h	Interrupt associated with TCC #17
16	I16	W	0h	Interrupt associated with TCC #16
15	I15	W	0h	Interrupt associated with TCC #15
14	I14	W	0h	Interrupt associated with TCC #14
13	I13	W	0h	Interrupt associated with TCC #13
12	I12	W	0h	Interrupt associated with TCC #12
11	I11	W	0h	Interrupt associated with TCC #11
10	I10	W	0h	Interrupt associated with TCC #10
9	I9	W	0h	Interrupt associated with TCC #9
8	I8	W	0h	Interrupt associated with TCC #8
7	I7	W	0h	Interrupt associated with TCC #7
6	I6	W	0h	Interrupt associated with TCC #6

Copyright © 2025 Texas Instruments Incorporated

Table 10-130. IESR_RN Register Field Descriptions (continued)

Bit	Field	Type	Reset	Description
5	I5	W	0h	Interrupt associated with TCC #5
4	I4	W	0h	Interrupt associated with TCC #4
3	I3	W	0h	Interrupt associated with TCC #3
2	I2	W	0h	Interrupt associated with TCC #2
1	I1	W	0h	Interrupt associated with TCC #1
0	I0	W	0h	Interrupt associated with TCC #0

Copyright © 2025 Texas Instruments Incorporated

10.1.7.1.100 IESRH_RN Register (Offset = 2064h) [reset = 0h]

IESRH_RN is shown in Figure 10-126 and described in Table 10-131.

Return to the Table 10-31.

Int Enable Set Register (High Part): CPU write of '1' to the IESRH.In bit causes the IESRH.In bit to be set. CPU write of '0' has no effect..

Figure 10-126. IESRH_RN Register

31	30	29	28	27	26	25	24	23	22	21	20	19	18	17	16
I63	I62	I61	I60	I59	I58	I57	I56	I55	I54	I53	I52	I51	I50	I49	I48
W-0h	W-0h	W-0h	W-0h	W-0h	W-0h	W-0h	W-0h	W-0h	W-0h	W-0h	W-0h	W-0h	W-0h	W-0h	W-0h
15	14	13	12	11	10	9	8	7	6	5	4	3	2	1	0
I47	I46	I45	I44	I43	I42	I41	I40	I39	I38	I37	I36	I35	I34	I33	I32
W-0h	W-0h	W-0h	W-0h	W-0h	W-0h	W-0h	W-0h	W-0h	W-0h	W-0h	W-0h	W-0h	W-0h	W-0h	W-0h

Table 10-131. IESRH_RN Register Field Descriptions

Bit	Field	Type	Reset	Description
31	I63	W	0h	Interrupt associated with TCC #63
30	I62	W	0h	Interrupt associated with TCC #62
29	I61	W	0h	Interrupt associated with TCC #61
28	I60	W	0h	Interrupt associated with TCC #60
27	I59	W	0h	Interrupt associated with TCC #59
26	I58	W	0h	Interrupt associated with TCC #58
25	I57	W	0h	Interrupt associated with TCC #57
24	I56	W	0h	Interrupt associated with TCC #56
23	I55	W	0h	Interrupt associated with TCC #55
22	I54	W	0h	Interrupt associated with TCC #54
21	I53	W	0h	Interrupt associated with TCC #53
20	I52	W	0h	Interrupt associated with TCC #52
19	I51	W	0h	Interrupt associated with TCC #51
18	I50	W	0h	Interrupt associated with TCC #50
17	I49	W	0h	Interrupt associated with TCC #49
16	I48	W	0h	Interrupt associated with TCC #48
15	I47	W	0h	Interrupt associated with TCC #47
14	I46	W	0h	Interrupt associated with TCC #46
13	I45	W	0h	Interrupt associated with TCC #45
12	I44	W	0h	Interrupt associated with TCC #44
11	I43	W	0h	Interrupt associated with TCC #43
10	I42	W	0h	Interrupt associated with TCC #42
9	I41	W	0h	Interrupt associated with TCC #41
8	I40	W	0h	Interrupt associated with TCC #40
7	I39	W	0h	Interrupt associated with TCC #39
6	I38	W	0h	Interrupt associated with TCC #38

Copyright © 2025 Texas Instruments Incorporated

Table 10-131. IESRH_RN Register Field Descriptions (continued)

Bit	Field	Type	Reset	Description
5	I37	W	0h	Interrupt associated with TCC #37
4	I36	W	0h	Interrupt associated with TCC #36
3	I35	W	0h	Interrupt associated with TCC #35
2	I34	W	0h	Interrupt associated with TCC #34
1	I33	W	0h	Interrupt associated with TCC #33
0	I32	W	0h	Interrupt associated with TCC #32

Copyright © 2025 Texas Instruments Incorporated

10.1.7.1.101 IPR_RN Register (Offset = 2068h) [reset = 0h]

IPR_RN is shown in Figure 10-127 and described in Table 10-132.

Return to the Table 10-31.

Interrupt Pending Register: IPR.In bit is set when a interrupt completion code with TCC of N is detected. IPR.In bit is cleared via software by writing a '1' to ICR.In bit.

Figure 10-127. IPR_RN Register

31	30	29	28	27	26	25	24	23	22	21	20	19	18	17	16
I31	I30	I29	I28	I27	I26	I25	I24	I23	I22	I21	I20	I19	I18	I17	I16
R-0h	R-0h	R-0h	R-0h	R-0h	R-0h	R-0h	R-0h	R-0h	R-0h	R-0h	R-0h	R-0h	R-0h	R-0h	R-0h
15	14	13	12	11	10	9	8	7	6	5	4	3	2	1	0
I15	I14	I13	I12	I11	I10	I9	I8	I7	I6	I5	I4	I3	I2	I1	I0
R-0h	R-0h	R-0h	R-0h	R-0h	R-0h	R-0h	R-0h	R-0h	R-0h	R-0h	R-0h	R-0h	R-0h	R-0h	R-0h

Table 10-132. IPR_RN Register Field Descriptions

Bit	Field	Type	Reset	Description
31	I31	R	0h	Interrupt associated with TCC #31
30	I30	R	0h	Interrupt associated with TCC #30
29	I29	R	0h	Interrupt associated with TCC #29
28	I28	R	0h	Interrupt associated with TCC #28
27	I27	R	0h	Interrupt associated with TCC #27
26	I26	R	0h	Interrupt associated with TCC #26
25	I25	R	0h	Interrupt associated with TCC #25
24	I24	R	0h	Interrupt associated with TCC #24
23	I23	R	0h	Interrupt associated with TCC #23
22	I22	R	0h	Interrupt associated with TCC #22
21	I21	R	0h	Interrupt associated with TCC #21
20	I20	R	0h	Interrupt associated with TCC #20
19	I19	R	0h	Interrupt associated with TCC #19
18	I18	R	0h	Interrupt associated with TCC #18
17	I17	R	0h	Interrupt associated with TCC #17
16	I16	R	0h	Interrupt associated with TCC #16
15	I15	R	0h	Interrupt associated with TCC #15
14	I14	R	0h	Interrupt associated with TCC #14
13	I13	R	0h	Interrupt associated with TCC #13
12	I12	R	0h	Interrupt associated with TCC #12
11	I11	R	0h	Interrupt associated with TCC #11
10	I10	R	0h	Interrupt associated with TCC #10
9	I9	R	0h	Interrupt associated with TCC #9
8	I8	R	0h	Interrupt associated with TCC #8
7	I7	R	0h	Interrupt associated with TCC #7
6	I6	R	0h	Interrupt associated with TCC #6

Copyright © 2025 Texas Instruments Incorporated

Table 10-132. IPR_RN Register Field Descriptions (continued)

Bit	Field	Type	Reset	Description
5	I5	R	0h	Interrupt associated with TCC #5
4	I4	R	0h	Interrupt associated with TCC #4
3	I3	R	0h	Interrupt associated with TCC #3
2	I2	R	0h	Interrupt associated with TCC #2
1	I1	R	0h	Interrupt associated with TCC #1
0	I0	R	0h	Interrupt associated with TCC #0

Copyright © 2025 Texas Instruments Incorporated

10.1.7.1.102 IPRH_RN Register (Offset = 206Ch) [reset = 0h]

IPRH_RN is shown in Figure 10-128 and described in Table 10-133.

Return to the Table 10-31.

Interrupt Pending Register (High Part): IPRH.In bit is set when a interrupt completion code with TCC of N is detected. IPRH.In bit is cleared via software by writing a '1' to ICRH.In bit.

Figure 10-128. IPRH_RN Register

31	30	29	28	27	26	25	24	23	22	21	20	19	18	17	16
I63	I62	I61	I60	I59	I58	I57	I56	I55	I54	I53	I52	I51	I50	I49	I48
R-0h	R-0h	R-0h	R-0h	R-0h	R-0h	R-0h	R-0h	R-0h	R-0h	R-0h	R-0h	R-0h	R-0h	R-0h	R-0h
15	14	13	12	11	10	9	8	7	6	5	4	3	2	1	0
I47	I46	I45	I44	I43	I42	I41	I40	I39	I38	I37	I36	I35	I34	I33	I32
R-0h	R-0h	R-0h	R-0h	R-0h	R-0h	R-0h	R-0h	R-0h	R-0h	R-0h	R-0h	R-0h	R-0h	R-0h	R-0h

Table 10-133. IPRH_RN Register Field Descriptions

Bit	Field	Type	Reset	Description
31	I63	R	0h	Interrupt associated with TCC #63
30	I62	R	0h	Interrupt associated with TCC #62
29	I61	R	0h	Interrupt associated with TCC #61
28	I60	R	0h	Interrupt associated with TCC #60
27	I59	R	0h	Interrupt associated with TCC #59
26	I58	R	0h	Interrupt associated with TCC #58
25	I57	R	0h	Interrupt associated with TCC #57
24	I56	R	0h	Interrupt associated with TCC #56
23	I55	R	0h	Interrupt associated with TCC #55
22	I54	R	0h	Interrupt associated with TCC #54
21	I53	R	0h	Interrupt associated with TCC #53
20	I52	R	0h	Interrupt associated with TCC #52
19	I51	R	0h	Interrupt associated with TCC #51
18	I50	R	0h	Interrupt associated with TCC #50
17	I49	R	0h	Interrupt associated with TCC #49
16	I48	R	0h	Interrupt associated with TCC #48
15	I47	R	0h	Interrupt associated with TCC #47
14	I46	R	0h	Interrupt associated with TCC #46
13	I45	R	0h	Interrupt associated with TCC #45
12	I44	R	0h	Interrupt associated with TCC #44
11	I43	R	0h	Interrupt associated with TCC #43
10	I42	R	0h	Interrupt associated with TCC #42
9	I41	R	0h	Interrupt associated with TCC #41
8	I40	R	0h	Interrupt associated with TCC #40
7	I39	R	0h	Interrupt associated with TCC #39
6	I38	R	0h	Interrupt associated with TCC #38

Copyright © 2025 Texas Instruments Incorporated

Table 10-133. IPRH_RN Register Field Descriptions (continued)

Bit	Field	Type	Reset	Description
5	I37	R	0h	Interrupt associated with TCC #37
4	I36	R	0h	Interrupt associated with TCC #36
3	I35	R	0h	Interrupt associated with TCC #35
2	I34	R	0h	Interrupt associated with TCC #34
1	I33	R	0h	Interrupt associated with TCC #33
0	I32	R	0h	Interrupt associated with TCC #32

Copyright © 2025 Texas Instruments Incorporated

10.1.7.1.103 ICR_RN Register (Offset = 2070h) [reset = 0h]

ICR_RN is shown in Figure 10-129 and described in Table 10-134.

Return to the Table 10-31.

Interrupt Clear Register: CPU write of '1' to the ICR.In bit causes the IPR.In bit to be cleared. CPU write of '0' has no effect. All IPR.In bits must be cleared before additional interrupts will be asserted by CC.

Figure 10-129. ICR_RN Register

31	30	29	28	27	26	25	24	23	22	21	20	19	18	17	16
I31	I30	I29	I28	I27	I26	I25	I24	I23	I22	I21	I20	I19	I18	I17	I16
W-0h	W-0h	W-0h	W-0h	W-0h	W-0h	W-0h	W-0h	W-0h	W-0h	W-0h	W-0h	W-0h	W-0h	W-0h	W-0h
15	14	13	12	11	10	9	8	7	6	5	4	3	2	1	0
I15	I14	I13	I12	I11	I10	I9	I8	I7	I6	I5	I4	I3	I2	I1	I0
W-0h	W-0h	W-0h	W-0h	W-0h	W-0h	W-0h	W-0h	W-0h	W-0h	W-0h	W-0h	W-0h	W-0h	W-0h	W-0h

Table 10-134. ICR_RN Register Field Descriptions

Bit	Field	Type	Reset	Description
31	I31	W	0h	Interrupt associated with TCC #31
30	I30	W	0h	Interrupt associated with TCC #30
29	I29	W	0h	Interrupt associated with TCC #29
28	I28	W	0h	Interrupt associated with TCC #28
27	I27	W	0h	Interrupt associated with TCC #27
26	I26	W	0h	Interrupt associated with TCC #26
25	I25	W	0h	Interrupt associated with TCC #25
24	I24	W	0h	Interrupt associated with TCC #24
23	I23	W	0h	Interrupt associated with TCC #23
22	I22	W	0h	Interrupt associated with TCC #22
21	I21	W	0h	Interrupt associated with TCC #21
20	I20	W	0h	Interrupt associated with TCC #20
19	I19	W	0h	Interrupt associated with TCC #19
18	I18	W	0h	Interrupt associated with TCC #18
17	I17	W	0h	Interrupt associated with TCC #17
16	I16	W	0h	Interrupt associated with TCC #16
15	I15	W	0h	Interrupt associated with TCC #15
14	I14	W	0h	Interrupt associated with TCC #14
13	I13	W	0h	Interrupt associated with TCC #13
12	I12	W	0h	Interrupt associated with TCC #12
11	I11	W	0h	Interrupt associated with TCC #11
10	I10	W	0h	Interrupt associated with TCC #10
9	I9	W	0h	Interrupt associated with TCC #9
8	I8	W	0h	Interrupt associated with TCC #8
7	I7	W	0h	Interrupt associated with TCC #7
6	I6	W	0h	Interrupt associated with TCC #6

Copyright © 2025 Texas Instruments Incorporated

Table 10-134. ICR_RN Register Field Descriptions (continued)

Bit	Field	Type	Reset	Description
5	I5	W	0h	Interrupt associated with TCC #5
4	I4	W	0h	Interrupt associated with TCC #4
3	I3	W	0h	Interrupt associated with TCC #3
2	I2	W	0h	Interrupt associated with TCC #2
1	I1	W	0h	Interrupt associated with TCC #1
0	I0	W	0h	Interrupt associated with TCC #0

Copyright © 2025 Texas Instruments Incorporated

10.1.7.1.104 ICRH_RN Register (Offset = 2074h) [reset = 0h]

ICRH_RN is shown in Figure 10-130 and described in Table 10-135.

Return to the Table 10-31.

Interrupt Clear Register (High Part): CPU write of '1' to the ICRH.In bit causes the IPRH.In bit to be cleared. CPU write of '0' has no effect. All IPRH.In bits must be cleared before additional interrupts will be asserted by CC.

Figure 10-130. ICRH_RN Register

31	30	29	28	27	26	25	24	23	22	21	20	19	18	17	16
I63	I62	I61	I60	I59	I58	I57	I56	I55	I54	I53	I52	I51	I50	I49	I48
W-0h	W-0h	W-0h	W-0h	W-0h	W-0h	W-0h	W-0h	W-0h	W-0h	W-0h	W-0h	W-0h	W-0h	W-0h	W-0h
15	14	13	12	11	10	9	8	7	6	5	4	3	2	1	0
I47	I46	I45	I44	I43	I42	I41	I40	I39	I38	I37	I36	I35	I34	I33	I32
W-0h	W-0h	W-0h	W-0h	W-0h	W-0h	W-0h	W-0h	W-0h	W-0h	W-0h	W-0h	W-0h	W-0h	W-0h	W-0h

Table 10-135. ICRH_RN Register Field Descriptions

Bit	Field	Type	Reset	Description
31	I63	W	0h	Interrupt associated with TCC #63
30	I62	W	0h	Interrupt associated with TCC #62
29	I61	W	0h	Interrupt associated with TCC #61
28	I60	W	0h	Interrupt associated with TCC #60
27	I59	W	0h	Interrupt associated with TCC #59
26	I58	W	0h	Interrupt associated with TCC #58
25	I57	W	0h	Interrupt associated with TCC #57
24	I56	W	0h	Interrupt associated with TCC #56
23	I55	W	0h	Interrupt associated with TCC #55
22	I54	W	0h	Interrupt associated with TCC #54
21	I53	W	0h	Interrupt associated with TCC #53
20	I52	W	0h	Interrupt associated with TCC #52
19	I51	W	0h	Interrupt associated with TCC #51
18	I50	W	0h	Interrupt associated with TCC #50
17	I49	W	0h	Interrupt associated with TCC #49
16	I48	W	0h	Interrupt associated with TCC #48
15	I47	W	0h	Interrupt associated with TCC #47
14	I46	W	0h	Interrupt associated with TCC #46
13	I45	W	0h	Interrupt associated with TCC #45
12	I44	W	0h	Interrupt associated with TCC #44
11	I43	W	0h	Interrupt associated with TCC #43
10	I42	W	0h	Interrupt associated with TCC #42
9	I41	W	0h	Interrupt associated with TCC #41
8	I40	W	0h	Interrupt associated with TCC #40
7	I39	W	0h	Interrupt associated with TCC #39
6	I38	W	0h	Interrupt associated with TCC #38

Copyright © 2025 Texas Instruments Incorporated

Table 10-135. ICRH_RN Register Field Descriptions (continued)

Bit	Field	Type	Reset	Description
5	I37	W	0h	Interrupt associated with TCC #37
4	I36	W	0h	Interrupt associated with TCC #36
3	I35	W	0h	Interrupt associated with TCC #35
2	I34	W	0h	Interrupt associated with TCC #34
1	I33	W	0h	Interrupt associated with TCC #33
0	I32	W	0h	Interrupt associated with TCC #32

Copyright © 2025 Texas Instruments Incorporated

10.1.7.1.105 IEVAL_RN Register (Offset = 2078h) [reset = 0h]

IEVAL_RN is shown in Figure 10-131 and described in Table 10-136.

Return to the Table 10-31.

Interrupt Eval Register

Figure 10-131. IEVAL_RN Register

31	30	29	28	27	26	25	24
RES76							
R-0h							
23	22	21	20	19	18	17	16
RES76							
R-0h							
15	14	13	12	11	10	9	8
RES76							
R-0h							
7	6	5	4	3	2	1	0
RES76						SET	EVAL
R-0h						W-0h	W-0h

Table 10-136. IEVAL_RN Register Field Descriptions

Bit	Field	Type	Reset	Description
31-2	RES76	R	0h	RESERVE FIELD
1	SET	W	0h	Interrupt Set: CPU write of '1' to the SETn bit causes the tpcc_intN output signal to be pulsed egardless of state of interrupts enable (IERn) and status (IPRn). CPU write of '0' has no effect.
0	EVAL	W	0h	Interrupt Evaluate: CPU write of '1' to the EVALn bit causes the tpcc_intN output signal to be pulsed if any enabled interrupts (IERn) are still pending (IPRn). CPU write of '0' has no effect..

Copyright © 2025 Texas Instruments Incorporated

10.1.7.1.106 QER_RN Register (Offset = 2080h) [reset = 0h]

QER_RN is shown in Figure 10-132 and described in Table 10-137.

Return to the Table 10-31.

QDMA Event Register: If QER.En bit is set then the corresponding QDMA channel is prioritized vs. other qdma events for submission to the TC. QER.En bit is set when a vbus write byte matches the address defined in the QCHMAPn register. QER.En bit is cleared when the corresponding event is prioritized and serviced. QER.En is also cleared when user writes a '1' to the QSECR.En bit. If the QER.En bit is already set and a new QDMA event is detected due to user write to QDMA trigger location and QEER register is set then the corresponding bit in the QDMA Event Missed Register is set.

Figure 10-132. QER_RN Register

31	30	29	28	27	26	25	24	23	22	21	20	19	18	17	16
RES77															
R-0h															
15	14	13	12	11	10	9	8	7	6	5	4	3	2	1	0
RES77								E7	E6	E5	E4	E3	E2	E1	E0
R-0h								R-0h	R-0h	R-0h	R-0h	R-0h	R-0h	R-0h	R-0h

Table 10-137. QER_RN Register Field Descriptions

Bit	Field	Type	Reset	Description
31-8	RES77	R	0h	RESERVE FIELD
7	E7	R	0h	Event #7
6	E6	R	0h	Event #6
5	E5	R	0h	Event #5
4	E4	R	0h	Event #4
3	E3	R	0h	Event #3
2	E2	R	0h	Event #2
1	E1	R	0h	Event #1
0	E0	R	0h	Event #0

Copyright © 2025 Texas Instruments Incorporated

10.1.7.1.107 QEER_RN Register (Offset = 2084h) [reset = 0h]

QEER_RN is shown in Figure 10-133 and described in Table 10-138.

Return to the Table 10-31.

QDMA Event Enable Register: Enabled/disabled QDMA address comparator for QDMA Channel N. QEER.En is not directly writeable. QDMA channels can be enabled via writes to QEESR and can be disabled via writes to QEECR register. QEER.En = 1 The corresponding QDMA channel comparator is enabled and Events will be recognized and latched in QER.En. QEER.En = 0 The corresponding QDMA channel comparator is disabled. Events will not be recognized/latched in QER.En.

Figure 10-133. QEER_RN Register

31	30	29	28	27	26	25	24	23	22	21	20	19	18	17	16
RES78															
R-0h															
15	14	13	12	11	10	9	8	7	6	5	4	3	2	1	0
RES78								E7	E6	E5	E4	E3	E2	E1	E0
R-0h								R-0h	R-0h	R-0h	R-0h	R-0h	R-0h	R-0h	R-0h

Table 10-138. QEER_RN Register Field Descriptions

Bit	Field	Type	Reset	Description
31-8	RES78	R	0h	RESERVE FIELD
7	E7	R	0h	Event #7
6	E6	R	0h	Event #6
5	E5	R	0h	Event #5
4	E4	R	0h	Event #4
3	E3	R	0h	Event #3
2	E2	R	0h	Event #2
1	E1	R	0h	Event #1
0	E0	R	0h	Event #0

Copyright © 2025 Texas Instruments Incorporated

10.1.7.1.108 QEECR_RN Register (Offset = 2088h) [reset = 0h]

QEECR_RN is shown in Figure 10-134 and described in Table 10-139.

Return to the Table 10-31.

QDMA Event Enable Clear Register: CPU write of '1' to the QEECR.En bit causes the QEER.En bit to be cleared. CPU write of '0' has no effect..

Figure 10-134. QEECR_RN Register

31	30	29	28	27	26	25	24	23	22	21	20	19	18	17	16
RES79															
R-0h															
15	14	13	12	11	10	9	8	7	6	5	4	3	2	1	0
RES79								E7	E6	E5	E4	E3	E2	E1	E0
R-0h								W-0h	W-0h	W-0h	W-0h	W-0h	W-0h	W-0h	W-0h

Table 10-139. QEECR_RN Register Field Descriptions

Bit	Field	Type	Reset	Description
31-8	RES79	R	0h	RESERVE FIELD
7	E7	W	0h	Event #7
6	E6	W	0h	Event #6
5	E5	W	0h	Event #5
4	E4	W	0h	Event #4
3	E3	W	0h	Event #3
2	E2	W	0h	Event #2
1	E1	W	0h	Event #1
0	E0	W	0h	Event #0

Copyright © 2025 Texas Instruments Incorporated

10.1.7.1.109 QEESR_RN Register (Offset = 208Ch) [reset = 0h]

QEESR_RN is shown in Figure 10-135 and described in Table 10-140.

Return to the Table 10-31.

QDMA Event Enable Set Register: CPU write of '1' to the QEESR.En bit causes the QEESR.En bit to be set. CPU write of '0' has no effect..

Figure 10-135. QEESR_RN Register

31	30	29	28	27	26	25	24	23	22	21	20	19	18	17	16
RES80															
R-0h															
15	14	13	12	11	10	9	8	7	6	5	4	3	2	1	0
RES80								E7	E6	E5	E4	E3	E2	E1	E0
R-0h								W-0h	W-0h	W-0h	W-0h	W-0h	W-0h	W-0h	W-0h

Table 10-140. QEESR_RN Register Field Descriptions

Bit	Field	Type	Reset	Description
31-8	RES80	R	0h	RESERVE FIELD
7	E7	W	0h	Event #7
6	E6	W	0h	Event #6
5	E5	W	0h	Event #5
4	E4	W	0h	Event #4
3	E3	W	0h	Event #3
2	E2	W	0h	Event #2
1	E1	W	0h	Event #1
0	E0	W	0h	Event #0

Copyright © 2025 Texas Instruments Incorporated

10.1.7.1.110 QSER_RN Register (Offset = 2090h) [reset = 0h]

QSER_RN is shown in Figure 10-136 and described in Table 10-141.

Return to the Table 10-31.

QDMA Secondary Event Register: The QDMA secondary event register is used along with the QDMA Event Register (QER) to provide information on the state of a QDMA Event. En = 0 : Event is not currently in the Event Queue. En = 1 : Event is currently stored in Event Queue. Event arbiter will not prioritize additional events.

Figure 10-136. QSER_RN Register

31	30	29	28	27	26	25	24	23	22	21	20	19	18	17	16
RES81															
R-0h															
15	14	13	12	11	10	9	8	7	6	5	4	3	2	1	0
RES81								E7	E6	E5	E4	E3	E2	E1	E0
R-0h								R-0h	R-0h	R-0h	R-0h	R-0h	R-0h	R-0h	R-0h

Table 10-141. QSER_RN Register Field Descriptions

Bit	Field	Type	Reset	Description
31-8	RES81	R	0h	RESERVE FIELD
7	E7	R	0h	Event #7
6	E6	R	0h	Event #6
5	E5	R	0h	Event #5
4	E4	R	0h	Event #4
3	E3	R	0h	Event #3
2	E2	R	0h	Event #2
1	E1	R	0h	Event #1
0	E0	R	0h	Event #0

Copyright © 2025 Texas Instruments Incorporated

10.1.7.1.111 QSECR_RN Register (Offset = 2094h) [reset = 0h]

QSECR_RN is shown in Figure 10-137 and described in Table 10-142.

Return to the Table 10-31.

QDMA Secondary Event Clear Register: The secondary event clear register is used to clear the status of the QSER and QER register (note that this is slightly different than the SER operation which does not clear the ER.En register). CPU write of '1' to the QSECR.En bit clears the QSER.En and QER.En register fields. CPU write of '0' has no effect..

Figure 10-137. QSECR_RN Register

31	30	29	28	27	26	25	24	23	22	21	20	19	18	17	16
RES82															
R-0h															
15	14	13	12	11	10	9	8	7	6	5	4	3	2	1	0
RES82								E7	E6	E5	E4	E3	E2	E1	E0
R-0h								W-0h	W-0h	W-0h	W-0h	W-0h	W-0h	W-0h	W-0h

Table 10-142. QSECR_RN Register Field Descriptions

Bit	Field	Type	Reset	Description
31-8	RES82	R	0h	RESERVE FIELD
7	E7	W	0h	Event #7
6	E6	W	0h	Event #6
5	E5	W	0h	Event #5
4	E4	W	0h	Event #4
3	E3	W	0h	Event #3
2	E2	W	0h	Event #2
1	E1	W	0h	Event #1
0	E0	W	0h	Event #0

Copyright © 2025 Texas Instruments Incorporated

10.1.7.1.112 OPT Register (Offset = 4000h) [reset = 0h]

OPT is shown in Figure 10-138 and described in Table 10-143.

Return to the Table 10-31.

Options Parameter

Figure 10-138. OPT Register

31	30	29	28	27	26	25	24
PRIV	RES83			PRIVID			
R-0h	R-0h			R-0h			
23	22	21	20	19	18	17	16
ITCCHEN	TCCHEN	ITCINTEN	TCINTEN	WIMODE	RES84	TCC	
R/W-0h	R/W-0h	R/W-0h	R/W-0h	R/W-0h	R-0h	R/W-0h	
15	14	13	12	11	10	9	8
TCC				TCCMODE	FWID		
R/W-0h				R/W-0h	R/W-0h		
7	6	5	4	3	2	1	0
RES85				STATIC	SYNCDIM	DAM	SAM
R-0h				R/W-0h	R/W-0h	R/W-0h	R/W-0h

Table 10-143. OPT Register Field Descriptions

Bit	Field	Type	Reset	Description
31	PRIV	R	0h	Privilege level: privilege level (supervisor vs. user) for the host/cpu/dma that programmed this PaRAM Entry. Value is set with the vbus priv value when any part of the PaRAM Entry is written. Not writeable via vbus wdata bus. Is readable via VBus rdata bus. PRIV = 0 : User level privilege PRIV = 1 : Supervisor level privilege
30-28	RES83	R	0h	RESERVE FIELD
27-24	PRIVID	R	0h	Privilege ID: Privilege ID for the external host/cpu/dma that programmed this PaRAM Entry. This value is set with the vbus privid value when any part of the PaRAM Entry is written. Not writeable via vbus wdata bus. Is readable via VBus rdata bus.
23	ITCCHEN	R/W	0h	Intermediate transfer completion chaining enable: 0: Intermediate transfer complete chaining is disabled. 1: Intermediate transfer complete chaining is enabled.
22	TCCHEN	R/W	0h	Transfer complete chaining enable: 0: Transfer complete chaining is disabled. 1: Transfer complete chaining is enabled.
21	ITCINTEN	R/W	0h	Intermediate transfer completion interrupt enable: 0: Intermediate transfer complete interrupt is disabled. 1: Intermediate transfer complete interrupt is enabled (corresponding IER[TCC] bit must be set to 1 to generate interrupt)
20	TCINTEN	R/W	0h	Transfer complete interrupt enable: 0: Transfer complete interrupt is disabled. 1: Transfer complete interrupt is enabled (corresponding IER[TCC] bit must be set to 1 to generate interrupt)

Copyright © 2025 Texas Instruments Incorporated

Table 10-143. OPT Register Field Descriptions (continued)

Bit	Field	Type	Reset	Description
19	WIMODE	R/W	0h	Backward compatibility mode: 0: Normal operation 1 : WI Backwards Compatibility mode forces BCNT to be adjusted by '1' upon TR submission (0 means 1 1 means 2 ...) and forces ACNT to be treated as a word-count (left shifted by 2 by hardware to create byte cnt for TR submission)
18	RES84	R	0h	RESERVE FIELD
17-12	TCC	R/W	0h	Transfer Complete Code: The 6-bit code is used to set the relevant bit in CER (bit CER[TCC]) for chaining or in IER (bit IER[TCC]) for interrupts.
11	TCCMODE	R/W	0h	Transfer complete code mode: Indicates the point at which a transfer is considered completed. Applies to both chaining and interrupt. 0: Normal Completion A transfer is considered completed after the transfer parameters are returned to the CC from the TC (which was returned from the peripheral). 1: Early Completion A transfer is considered completed after the CC submits a TR to the TC. CC generates completion code internally .
10-8	FWID	R/W	0h	FIFO width: Applies if either SAM or DAM is set to FIFO mode. Pass-thru to TC.
7-4	RES85	R	0h	RESERVE FIELD
3	STATIC	R/W	0h	Static Entry: 0: Entry is updated as normal 1: Entry is static Count and Address updates are not updated after TRP is submitted. Linking is not performed.
2	SYNCDIM	R/W	0h	Transfer Synchronization Dimension: 0: A-Sync Each event triggers the transfer of ACNT elements. 1: AB-Sync Each event triggers the transfer of BCNT arrays of ACNT elements
1	DAM	R/W	0h	Destination Address Mode: Destination Address Mode within an array. Pass-thru to TC. 0: INCR Dst addressing within an array increments. Dst is not a FIFO. 1: FIFO Dst addressing within an array wraps around upon reaching FIFO width.
0	SAM	R/W	0h	Source Address Mode: Source Address Mode within an array. Pass-thru to TC. 0: INCR Src addressing within an array increments. Source is not a FIFO. 1: FIFO Src addressing within an array wraps around upon reaching FIFO width.

Copyright © 2025 Texas Instruments Incorporated

10.1.7.1.113 SRC Register (Offset = 4004h) [reset = 0h]

SRC is shown in Figure 10-139 and described in Table 10-144.

Return to the Table 10-31.

Source Address

Figure 10-139. SRC Register

31	30	29	28	27	26	25	24	23	22	21	20	19	18	17	16	15	14	13	12	11	10	9	8	7	6	5	4	3	2	1	0
SRC																															
R/W-0h																															

Table 10-144. SRC Register Field Descriptions

Bit	Field	Type	Reset	Description
31-0	SRC	R/W	0h	Source Address: The 32-bit source address parameters specify the starting byte address of the source . If SAM is set to FIFO mode then the user should program the Source address to be aligned to the value specified by the OPT.FWID field. No errors are recognized here but TC will assert error if this is not true.

Copyright © 2025 Texas Instruments Incorporated

10.1.7.1.114 ABCNT Register (Offset = 4008h) [reset = 0h]

ABCNT is shown in Figure 10-140 and described in Table 10-145.

Return to the Table 10-31.

A and B byte count

Figure 10-140. ABCNT Register

31	30	29	28	27	26	25	24	23	22	21	20	19	18	17	16	15	14	13	12	11	10	9	8	7	6	5	4	3	2	1	0
BCNT																ACNT															
R/W-0h																R/W-0h															

Table 10-145. ABCNT Register Field Descriptions

Bit	Field	Type	Reset	Description
31-16	BCNT	R/W	0h	BCNT : Count for 2nd Dimension: BCNT is a 16-bit unsigned value that specifies the number of arrays of length ACNT. For normal operation valid values for BCNT can be anywhere between 1 and 65535. Therefore the maximum number of arrays in a frame is 65535 (64K-1 arrays). BCNT=1 means 1 array in the frame and BCNT=0 means 0 arrays in the frame. In normal mode a BCNT of '0' is considered as either a Null or Dummy transfer. A Dummy or Null transfer will generate a Completion code depending on the settings of the completion bit fields of the OPT field. If the OPT.WIMODE bit is set then the programmed BCNT value will be incremented by '1' before submission to TC. I.e. 0 means 1 1 means 2 2 means 3 ...
15-0	ACNT	R/W	0h	ACNT : number of bytes in 1st dimension: ACNT represents the number of bytes within the first dimension of a transfer. ACNT is a 16-bit unsigned value with valid values between 0 and 65535. Therefore the maximum number of bytes in an array is 65535 bytes (64K-1 bytes). ACNT must be greater than or equal to '1' for a TR to be submitted to TC. An ACNT of '0' is considered as either a null or dummy transfer. A Dummy or Null transfer will generate a Completion code depending on the settings of the completion bit fields of the OPT field. If the OPT.WIMODE bit is set then the ACNT field represents a word count. The CC must internally multiply by 4 to translate the word count to a byte count prior to submission to the TC. The 2 MSBs of the 16-bit ACNT are reserved and should always be written as 'b00 by the user. If user writes a value other than 0 it will still be treated as 0 since the multiply-by-4 operation (to translate between a word count and a byte count) will drop the 2 msbits. For dummy and null transfer definition the ACNT definition will disregard the 2 msbits. I.e. a programmed ACNT value of 0x8000 in WI-mode will be treated as 0 byte transfer resulting in null or dummy operation dependent on the state of BCNT and CCNT.

Copyright © 2025 Texas Instruments Incorporated

10.1.7.1.115 DST Register (Offset = 400Ch) [reset = 0h]

DST is shown in Figure 10-141 and described in Table 10-146.

Return to the Table 10-31.

Destination Address

Figure 10-141. DST Register

31	30	29	28	27	26	25	24	23	22	21	20	19	18	17	16	15	14	13	12	11	10	9	8	7	6	5	4	3	2	1	0
DST																															
R/W-0h																															

Table 10-146. DST Register Field Descriptions

Bit	Field	Type	Reset	Description
31-0	DST	R/W	0h	Destination Address: The 32-bit destination address parameters specify the starting byte address of the destination. If DAM is set to FIFO mode then the user should program the Destination address to be aligned to the value specified by the OPT.FWID field. No errors are recognized here but TC will assert error if this is not true.

Copyright © 2025 Texas Instruments Incorporated

10.1.7.1.116 BIDX Register (Offset = 4010h) [reset = 0h]

BIDX is shown in Figure 10-142 and described in Table 10-147.

Return to the Table 10-31.

Register description is not available

Figure 10-142. BIDX Register

31	30	29	28	27	26	25	24	23	22	21	20	19	18	17	16	15	14	13	12	11	10	9	8	7	6	5	4	3	2	1	0
DBIDX																SBIDX															
R/W-0h																R/W-0h															

Table 10-147. BIDX Register Field Descriptions

Bit	Field	Type	Reset	Description
31-16	DBIDX	R/W	0h	Destination 2nd Dimension Index: DBIDX is a 16-bit signed value (2's complement) used for destination address modification in between each array in the 2nd dimension. It is a signed value between -32768 and 32767. It provides a byte address offset from the beginning of the destination array to the beginning of the next destination array within the current frame. It applies to both A-Sync and AB-Sync transfers.
15-0	SBIDX	R/W	0h	Source 2nd Dimension Index: SBIDX is a 16-bit signed value (2's complement) used for source address modification in between each array in the 2nd dimension. It is a signed value between -32768 and 32767. It provides a byte address offset from the beginning of the source array to the beginning of the next source array. It applies to both A-sync and AB-sync transfers.

Copyright © 2025 Texas Instruments Incorporated

10.1.7.1.117 LNK Register (Offset = 4014h) [reset = 0h]

LNK is shown in Figure 10-143 and described in Table 10-148.

Return to the Table 10-31.

Link and Reload parameters

Figure 10-143. LNK Register

31	30	29	28	27	26	25	24	23	22	21	20	19	18	17	16	15	14	13	12	11	10	9	8	7	6	5	4	3	2	1	0
BCNTRLD																LINK															
R/W-0h																R/W-0h															

Table 10-148. LNK Register Field Descriptions

Bit	Field	Type	Reset	Description
31-16	BCNTRLD	R/W	0h	BCNT Reload: BCNTRLD is a 16-bit unsigned value used to reload the BCNT field once the last array in the 2nd dimension is transferred. This field is only used for A-Sync'ed transfers. In this case the CC decrements the BCNT value by one on each TR submission. When BCNT (conceptually) reaches zero then the CC decrements CCNT and uses the BCNTRLD value to reinitialize the BCNT value. For AB-synchronized transfers the CC submits the BCNT in the TR and therefore the TC is responsible to keep track of BCNT not thus BCNTRLD is a don't care field.
15-0	LINK	R/W	0h	Link Address: The CC provides a mechanism to reload the current PaRAM Entry upon its natural termination (i.e. after count fields are decremented to '0') with a new PaRAM Entry. This is called 'linking'. The 16-bit parameter LINK specifies the byte address offset in the PaRAM from which the CC loads/reloads the next PaRAM entry in the link. The CC should disregard the value in the upper 2 bits of the LINK field as well as the lower 5-bits of the LINK field. The upper two bits are ignored such that the user can program either the 'literal' byte address of the LINK parameter or the 'PaRAM base-relative' address of the link field. Therefore if the user uses the literal address with a range from 0x4000 to 0x7FFF it will be treated as a PaRAM-base-relative value of 0x0000 to 0x3FFF. The lower-5 bits are ignored and treated as 'b00000 thereby guaranteeing that all Link pointers point to a 32-byte aligned PaRAM entry. In the latter case (5-lsbs) behavior is undefined for the user (i.e. don't have to test it). In the former case (2 msbs) user should be able to take advantage of this feature (i.e. do have to test it). If a Link Update is requested to a PaRAM address that is beyond the actual range of implemented PaRAM then the Link will be treated as a Null Linkand all 0s plus 0xFFFF will be written to the current entry location. A LINK value of 0xFFFF is referred to as a NULL link which should cause the CC to write 0x0 to all entries of the current PaRAM Entry except for the LINK field which is set to 0xFFFF. The Priv/Privid/Secure state is overwritten to 0x0 when linking. MSBs and LSBS should not be masked when comparing against the 0xFFFF value. I.e. a value of 0x3FFE is a non-NULL PaRAM link field.

Copyright © 2025 Texas Instruments Incorporated

10.1.7.1.118 CIDX Register (Offset = 4018h) [reset = 0h]

CIDX is shown in Figure 10-144 and described in Table 10-149.

Return to the Table 10-31.

Register description is not available

Figure 10-144. CIDX Register

31	30	29	28	27	26	25	24	23	22	21	20	19	18	17	16	15	14	13	12	11	10	9	8	7	6	5	4	3	2	1	0
DCIDX																SCIDX															
R/W-0h																R/W-0h															

Table 10-149. CIDX Register Field Descriptions

Bit	Field	Type	Reset	Description
31-16	DCIDX	R/W	0h	Destination Frame Index: DCIDX is a 16-bit signed value (2's complement) used for destination address modification for the 3rd dimension. It is a signed value between -32768 and 32767. It provides a byte address offset from the beginning of the current array (pointed to by DST address) to the beginning of the first destination array in the next frame. It applies to both A-sync and AB-sync transfers. Note that when DCIDX is applied the current array in an A-sync transfer is the last array in the frame while the current array in a ABsync transfer is the first array in the frame.
15-0	SCIDX	R/W	0h	Source Frame Index: SCIDX is a 16-bit signed value (2's complement) used for source address modification for the 3rd dimension. It is a signed value between -32768 and 32767. It provides a byte address offset from the beginning of the current array (pointed to by SRC address) to the beginning of the first source array in the next frame. It applies to both A-sync and AB-sync transfers. Note that when SCIDX is applied the current array in an A-sync transfer is the last array in the frame while the current array in a AB-sync transfer is the first array in the frame.

Copyright © 2025 Texas Instruments Incorporated

10.1.7.1.119 CCNT Register (Offset = 401Ch) [reset = 0h]

CCNT is shown in Figure 10-145 and described in Table 10-150.

Return to the Table 10-31.

C byte count

Figure 10-145. CCNT Register

31	30	29	28	27	26	25	24	23	22	21	20	19	18	17	16	15	14	13	12	11	10	9	8	7	6	5	4	3	2	1	0
RES86																CCNT															
R-0h																R/W-0h															

Table 10-150. CCNT Register Field Descriptions

Bit	Field	Type	Reset	Description
31-16	RES86	R	0h	RESERVE FIELD
15-0	CCNT	R/W	0h	CCNT : Count for 3rd Dimension: CCNT is a 16-bit unsigned value that specifies the number of frames in a block. Valid values for CCNT can be anywhere between 1 and 65535. Therefore the maximum number of frames in a block is 65535 (64K-1 frames). CCNT of '1' means '1' frame in the block and CCNT of '0' means '0' frames in the block. A CCNT value of '0' is considered as either a null or dummy transfer. A Dummy or Null transfer will generate a Completion code depending on the settings of the completion bit fields of the OPT field. WIMODE has no affect on CCNT operation.

Copyright © 2025 Texas Instruments Incorporated

10.1.7.2 TPTC Registers

Table 10-151 lists the TPTC registers. All register offset addresses not listed in Table 10-151 should be considered as reserved locations and the register contents should not be modified.

Table 10-151. TPTC Registers

Offset	Acronym	Register Name	Section
0h	PID	Peripheral ID Register	Section 11.1.7.2.1
4h	TCCFG	TC Configuration Register	Section 11.1.7.2.2
100h	TCSTAT	TC Status Register	Section 11.1.7.2.3
104h	INTSTAT	Interrupt Status Register	Section 11.1.7.2.4
108h	INTEN	Interrupt Enable Register	Section 11.1.7.2.5
10Ch	INTCLR	Interrupt Clear Register	Section 11.1.7.2.6
110h	INTCMD	Interrupt Command Register	Section 11.1.7.2.7
120h	ERRSTAT	Error Status Register	Section 11.1.7.2.8
124h	ERREN	Error Enable Register	Section 11.1.7.2.9
128h	ERRCLR	Error Clear Register	Section 11.1.7.2.10
12Ch	ERRDET	Error Details Register	Section 11.1.7.2.11
130h	ERRCMD	Error Command Register	Section 11.1.7.2.12
140h	RDRATE	Read Rate Register	Section 11.1.7.2.13
200h	POPT	Prog Set Options	Section 11.1.7.2.14
204h	PSRC	Prog Set Src Address	Section 11.1.7.2.15
208h	PCNT	Prog Set Count	Section 11.1.7.2.16
20Ch	PDST	Prog Set Dst Address	Section 11.1.7.2.17
210h	PBIDX	Prog Set B-Dim Idx	Section 11.1.7.2.18
214h	PMPPRXY	Prog Set Mem Protect Proxy	Section 11.1.7.2.19
240h	SAOPT	Src Actv Set Options	Section 11.1.7.2.20
244h	SASRC	Src Actv Set Src Address	Section 11.1.7.2.21
248h	SACNT	Src Actv Set A-Count	Section 11.1.7.2.22
24Ch	SADST	Src Actv Set Dst Address	Section 11.1.7.2.23
250h	SABIDX	Src Actv Set B-Dim Idx	Section 11.1.7.2.24
254h	SAMPPRXY	Src Actv Set Mem Protect Proxy	Section 11.1.7.2.25
258h	SACNTRLD	Src Actv Set Cnt Reload	Section 11.1.7.2.26
25Ch	SASRCBREF	Src Actv Set Src Addr B-Reference	Section 11.1.7.2.27
260h	SADSTBREF	Src Actv Set Dst Addr B-Reference	Section 11.1.7.2.28
264h	SABCNT	Src Actv Set B-Count	Section 11.1.7.2.29
280h	DFCNTRLD	Dst FIFO Set Cnt Reload	Section 11.1.7.2.30
284h	DFSRCBREF	Dst FIFO Set Src Addr B-Reference	Section 11.1.7.2.31
300h	DFOPT0	Dst FIFO Set Options	Section 11.1.7.2.32
304h	DFSRC0	Dst FIFO Set Src Address	Section 11.1.7.2.33
308h	DFACNT0	Dst FIFO Set A-Count	Section 11.1.7.2.34
30Ch	DFDST0	Dst FIFO Set Dst Address	Section 11.1.7.2.35
310h	DFBIDX0	Dst FIFO Set B-Dim Idx	Section 11.1.7.2.36
314h	DFMPPRXY0	Dst FIFO Set Mem Protect Proxy	Section 11.1.7.2.37
318h	DFBCNT0	Dst FIFO Set B-Count	Section 11.1.7.2.38
340h	DFOPT1	Dst FIFO Set Options	Section 11.1.7.2.39
344h	DFSRC1	Dst FIFO Set Src Address	Section 11.1.7.2.40
348h	DFACNT1	Dst FIFO Set A-Count	Section 11.1.7.2.41

Copyright © 2025 Texas Instruments Incorporated

Table 10-151. TPTC Registers (continued)

Offset	Acronym	Register Name	Section
34Ch	DFDST1	Dst FIFO Set Dst Address	Section 11.1.7.2.42
350h	DFBIDX1	Dst FIFO Set B-Dim Idx	Section 11.1.7.2.43
354h	DFMPPRXY1	Dst FIFO Set Mem Protect Proxy	Section 11.1.7.2.44
358h	DFBCNT1	Dst FIFO Set B-Count	Section 11.1.7.2.45

Copyright © 2025 Texas Instruments Incorporated

10.1.7.2.1 PID Register (Offset = 0h) [reset = X]

PID is shown in Figure 10-146 and described in Table 10-152.

Return to the Table 10-151.

Peripheral ID Register

Figure 10-146. PID Register

31	30	29	28	27	26	25	24
SCHEME		RESERVED		FUNC			
R-1h		R-X		R-0h			
23	22	21	20	19	18	17	16
FUNC							
R-0h							
15	14	13	12	11	10	9	8
RTL					MAJOR		
R-1h					R-3h		
7	6	5	4	3	2	1	0
CUSTOM		MINOR					
R-0h		R-1h					

Table 10-152. PID Register Field Descriptions

Bit	Field	Type	Reset	Description
31-30	SCHEME	R	1h	PID Scheme: Used to distinguish between old ID scheme and current. Spare bit to encode future schemes EDMA uses 'new scheme' indicated with value of 0x1.
29-28	RESERVED	R	X	
27-16	FUNC	R	0h	Function indicates a software compatible module family.
15-11	RTL	R	1h	RTL Version
10-8	MAJOR	R	3h	Major Revision
7-6	CUSTOM	R	0h	Custom revision field: Not used on this version of EDMA.
5-0	MINOR	R	1h	Minor Revision

Copyright © 2025 Texas Instruments Incorporated

10.1.7.2.2 TCCFG Register (Offset = 4h) [reset = X]

TCCFG is shown in Figure 10-147 and described in Table 10-153.

Return to the Table 10-151.

TC Configuration Register

Figure 10-147. TCCFG Register

31	30	29	28	27	26	25	24
RESERVED							
R-X							
23	22	21	20	19	18	17	16
RESERVED							
R-X							
15	14	13	12	11	10	9	8
RESERVED						DREGDEPTH	
R-X						R-2h	
7	6	5	4	3	2	1	0
RESERVED		BUSWIDTH		RESERVED		FIFOSIZE	
R-X		R-2h		R-X		R-4h	

Table 10-153. TCCFG Register Field Descriptions

Bit	Field	Type	Reset	Description
31-10	RESERVED	R	X	
9-8	DREGDEPTH	R	2h	Dst Register FIFO Depth Parameterization
7-6	RESERVED	R	X	
5-4	BUSWIDTH	R	2h	Bus Width Parameterization
3	RESERVED	R	X	
2-0	FIFOSIZE	R	4h	Fifo Size Parameterization

Copyright © 2025 Texas Instruments Incorporated

10.1.7.2.3 TCSTAT Register (Offset = 100h) [reset = X]

TCSTAT is shown in Figure 10-148 and described in Table 10-154.

Return to the Table 10-151.

TC Status Register

Figure 10-148. TCSTAT Register

31	30	29	28	27	26	25	24
RESERVED							
R-X							
23	22	21	20	19	18	17	16
RESERVED							
R-X							
15	14	13	12	11	10	9	8
RESERVED		DFSTRTPTR		RESERVED			ACTV
R-X		R-0h		R-X			R-1h
7	6	5	4	3	2	1	0
RESERVED	DSTACTV			RESERVED	WSACTV	SRCACTV	PROGBUSY
R-X	R-0h			R-X	R-0h	R-0h	R-0h

Table 10-154. TCSTAT Register Field Descriptions

Bit	Field	Type	Reset	Description
31-14	RESERVED	R	X	
13-12	DFSTRTPTR	R	0h	Dst FIFO Start Pointer Represents the offset to the head entry of Dst Register FIFO in units of entries. Legal values = 0x0 to 0x3
11-9	RESERVED	R	X	
8	ACTV	R	1h	Channel Active Channel Active is a logical-OR of each of the BUSY/ACTV signals. The ACTV bit must remain high through the life of a TR. ACTV = 0 : Channel is idle. ACTV = 1 : Channel is busy.
7	RESERVED	R	X	
6-4	DSTACTV	R	0h	Destination Active State Specifies the number of TRs that are resident in the Dst Register FIFO at a given instant. Legal values are constrained by the DSTREGDEPTH parameter.
3	RESERVED	R	X	
2	WSACTV	R	0h	Write Status Active WSACTV = 0 : Write status is not pending. Write status has been received for all previously issued write commands. WSACTV = 1 : Write Status is pending. Write status has not been received for all previously issued write commands.

Copyright © 2025 Texas Instruments Incorporated

Table 10-154. TCSTAT Register Field Descriptions (continued)

Bit	Field	Type	Reset	Description
1	SRCACTV	R	0h	Source Active State SRCACTV = 0 : Source Active set is idle. Any TR written to Prog Set will immediately transition to Source Active set as long as the Dst FIFO Set is not full [DSTFULL == 1]. SRCACTV = 1 : Source Active set is busy either performing read transfers or waiting to perform read transfers for current Transfer Request.
0	PROGBUSY	R	0h	Program Register Set Busy PROGBUSY = 0 : Prog set idle and is available for programming. PROGBUSY = 1 : Prog set busy. User should poll for PROGBUSY equal to '0' prior to re-programming the Program Register set.

Copyright © 2025 Texas Instruments Incorporated

10.1.7.2.4 INTSTAT Register (Offset = 104h) [reset = X]

INTSTAT is shown in Figure 10-149 and described in Table 10-155.

Return to the Table 10-151.

Interrupt Status Register

Figure 10-149. INTSTAT Register

31	30	29	28	27	26	25	24
RESERVED							
R-X							
23	22	21	20	19	18	17	16
RESERVED							
R-X							
15	14	13	12	11	10	9	8
RESERVED							
R-X							
7	6	5	4	3	2	1	0
RESERVED						TRDONE	PROGEMPTY
R-X						R-0h	R-0h

Table 10-155. INTSTAT Register Field Descriptions

Bit	Field	Type	Reset	Description
31-2	RESERVED	R	X	
1	TRDONE	R	0h	TR Done Event Status: TRDONE = 0 : Condition not detected. TRDONE = 1 : Set when TC has completed a Transfer Request. TRDONE should be set when the write status is returned for the final write of a TR. Cleared when user writes '1' to INTCLR.TRDONE register bit.
0	PROGEMPTY	R	0h	Program Set Empty Event Status: PROGEMPTY = 0 : Condition not detected. PROGEMPTY = 1 : Set when Program Register set transitions to empty state. Cleared when user writes '1' to INTCLR.PROGEMPTY register bit.

Copyright © 2025 Texas Instruments Incorporated

10.1.7.2.5 INTEN Register (Offset = 108h) [reset = X]

INTEN is shown in Figure 10-150 and described in Table 10-156.

Return to the Table 10-151.

Interrupt Enable Register

Figure 10-150. INTEN Register

31	30	29	28	27	26	25	24
RESERVED							
R/W-X							
23	22	21	20	19	18	17	16
RESERVED							
R/W-X							
15	14	13	12	11	10	9	8
RESERVED							
R/W-X							
7	6	5	4	3	2	1	0
RESERVED						TRDONE	PROGEMPTY
R/W-X						R/W-0h	R/W-0h

Table 10-156. INTEN Register Field Descriptions

Bit	Field	Type	Reset	Description
31-2	RESERVED	R/W	X	
1	TRDONE	R/W	0h	TR Done Event Enable: INTEN.TRDONE = 0 : TRDONE Event is disabled. INTEN.TRDONE = 1 : TRDONE Event is enabled and contributes to interrupt generation
0	PROGEMPTY	R/W	0h	Program Set Empty Event Enable: INTEN.PROGEMPTY = 0 : PROGEMPTY Event is disabled. INTEN.PROGEMPTY = 1 : PROGEMPTY Event is enabled and contributes to interrupt generation

Copyright © 2025 Texas Instruments Incorporated

10.1.7.2.6 INTCLR Register (Offset = 10Ch) [reset = X]

INTCLR is shown in Figure 10-151 and described in Table 10-157.

Return to the Table 10-151.

Interrupt Clear Register

Figure 10-151. INTCLR Register

31	30	29	28	27	26	25	24
RESERVED							
W-X							
23	22	21	20	19	18	17	16
RESERVED							
W-X							
15	14	13	12	11	10	9	8
RESERVED							
W-X							
7	6	5	4	3	2	1	0
RESERVED						TRDONE	PROGEMPTY
W-X						W-0h	W-0h

Table 10-157. INTCLR Register Field Descriptions

Bit	Field	Type	Reset	Description
31-2	RESERVED	W	X	
1	TRDONE	W	0h	TR Done Event Clear: INTCLR.TRDONE = 0 : Writes of '0' have no effect. INTCLR.TRDONE = 1 : Write of '1' clears INTSTAT.TRDONE bit
0	PROGEMPTY	W	0h	Program Set Empty Event Clear: INTCLR.PROGEMPTY = 0 : Writes of '0' have no effect. INTCLR.PROGEMPTY = 1 : Write of '1' clears INTSTAT.PROGEMPTY bit

Copyright © 2025 Texas Instruments Incorporated

10.1.7.2.7 INTCMD Register (Offset = 110h) [reset = X]

INTCMD is shown in Figure 10-152 and described in Table 10-158.

Return to the Table 10-151.

Interrupt Command Register

Figure 10-152. INTCMD Register

31	30	29	28	27	26	25	24
RESERVED							
W-X							
23	22	21	20	19	18	17	16
RESERVED							
W-X							
15	14	13	12	11	10	9	8
RESERVED							
W-X							
7	6	5	4	3	2	1	0
RESERVED						SET	EVAL
W-X						W-0h	W-0h

Table 10-158. INTCMD Register Field Descriptions

Bit	Field	Type	Reset	Description
31-2	RESERVED	W	X	
1	SET	W	0h	Set TPTC interrupt: Write of '1' to SET causes TPTC interrupt to be pulsed unconditionally. Writes of '0' have no affect.
0	EVAL	W	0h	Evaluate state of TPTC interrupt Write of '1' to EVAL causes TPTC interrupt to be pulsed if any of the INTSTAT bits are set to '1'. Writes of '0' have no affect.

Copyright © 2025 Texas Instruments Incorporated

10.1.7.2.8 ERRSTAT Register (Offset = 120h) [reset = X]

ERRSTAT is shown in Figure 10-153 and described in Table 10-159.

Return to the Table 10-151.

Error Status Register

Figure 10-153. ERRSTAT Register

31	30	29	28	27	26	25	24
RESERVED							
R-X							
23	22	21	20	19	18	17	16
RESERVED							
R-X							
15	14	13	12	11	10	9	8
RESERVED							
R-X							
7	6	5	4	3	2	1	0
RESERVED				MMRAERR	TRERR	RESERVED	BUSERR
R-X				R-0h	R-0h	R-X	R-0h

Table 10-159. ERRSTAT Register Field Descriptions

Bit	Field	Type	Reset	Description
31-4	RESERVED	R	X	
3	MMRAERR	R	0h	MMR Address Error: MMRAERR = 0 : Condition not detected. MMRAERR = 1 : User attempted to read or write to invalid address configuration memory map. [Is only be set for non-emulation accesses]. No additional error information is recorded.
2	TRERR	R	0h	TR Error: TR detected that violates FIFO Mode transfer [SAM or DAM is '1'] alignment rules or has ACNT or BCNT == 0. No additional error information is recorded.
1	RESERVED	R	X	
0	BUSERR	R	0h	Bus Error Event: BUSERR = 0: Condition not detected. BUSERR = 1: TC has detected an error code on the write response bus or read response bus. Error information is stored in Error Details Register [ERRDET].

Copyright © 2025 Texas Instruments Incorporated

10.1.7.2.9 ERREN Register (Offset = 124h) [reset = X]

ERREN is shown in Figure 10-154 and described in Table 10-160.

Return to the Table 10-151.

Error Enable Register

Figure 10-154. ERREN Register

31	30	29	28	27	26	25	24
RESERVED							
R/W-X							
23	22	21	20	19	18	17	16
RESERVED							
R/W-X							
15	14	13	12	11	10	9	8
RESERVED							
R/W-X							
7	6	5	4	3	2	1	0
RESERVED				MMRAERR	TRERR	RESERVED	BUSERR
R/W-X				R/W-0h	R/W-0h	R/W-X	R/W-0h

Table 10-160. ERREN Register Field Descriptions

Bit	Field	Type	Reset	Description
31-4	RESERVED	R/W	X	
3	MMRAERR	R/W	0h	Interrupt enable for ERRSTAT.MMRAERR: ERREN.MMRAERR = 0 : BUSERR is disabled. ERREN.MMRAERR = 1 : MMRAERR is enabled and contributes to the TPTC error interrupt generation.
2	TRERR	R/W	0h	Interrupt enable for ERRSTAT.TRERR: ERREN.TRERR = 0 : BUSERR is disabled. ERREN.TRERR = 1 : TRERR is enabled and contributes to the TPTC error interrupt generation.
1	RESERVED	R/W	X	
0	BUSERR	R/W	0h	Interrupt enable for ERRSTAT.BUSERR: ERREN.BUSERR = 0 : BUSERR is disabled. ERREN.BUSERR = 1 : BUSERR is enabled and contributes to the TPTC error interrupt generation.

Copyright © 2025 Texas Instruments Incorporated

10.1.7.2.10 ERRCLR Register (Offset = 128h) [reset = X]

ERRCLR is shown in Figure 10-155 and described in Table 10-161.

Return to the Table 10-151.

Error Clear Register

Figure 10-155. ERRCLR Register

31	30	29	28	27	26	25	24
RESERVED							
W-X							
23	22	21	20	19	18	17	16
RESERVED							
W-X							
15	14	13	12	11	10	9	8
RESERVED							
W-X							
7	6	5	4	3	2	1	0
RESERVED				MMRAERR	TRERR	RESERVED	BUSERR
W-X				W-0h	W-0h	W-X	W-0h

Table 10-161. ERRCLR Register Field Descriptions

Bit	Field	Type	Reset	Description
31-4	RESERVED	W	X	
3	MMRAERR	W	0h	Interrupt clear for ERRSTAT.MMRAERR: ERRCLR.MMRAERR = 0 : Writes of '0' have no effect. ERRCLR.MMRAERR = 1 : Write of '1' clears ERRSTAT.MMRAERR bit. Write of '1' to ERRCLR.MMRAERR does not clear the ERRDET register.
2	TRERR	W	0h	Interrupt clear for ERRSTAT.TRERR: ERRCLR.TRERR = 0 : Writes of '0' have no effect. ERRCLR.TRERR = 1 : Write of '1' clears ERRSTAT.TRERR bit. Write of '1' to ERRCLR.TRERR does not clear the ERRDET register.
1	RESERVED	W	X	
0	BUSERR	W	0h	Interrupt clear for ERRSTAT.BUSERR: ERRCLR.BUSERR = 0 : Writes of '0' have no effect. ERRCLR.BUSERR = 1 : Write of '1' clears ERRSTAT.BUSERR bit. Write of '1' to ERRCLR.BUSERR clears the ERRDET register.

Copyright © 2025 Texas Instruments Incorporated

10.1.7.2.11 ERRDET Register (Offset = 12Ch) [reset = X]

ERRDET is shown in Figure 10-156 and described in Table 10-162.

Return to the Table 10-151.

Error Details Register

Figure 10-156. ERRDET Register

31	30	29	28	27	26	25	24
RESERVED							
R-X							
23	22	21	20	19	18	17	16
RESERVED						TCCHEN	TCINTEN
R-X						R-0h	R-0h
15	14	13	12	11	10	9	8
RESERVED		TCC					
R-X		R-0h					
7	6	5	4	3	2	1	0
RESERVED				STAT			
R-X				R-0h			

Table 10-162. ERRDET Register Field Descriptions

Bit	Field	Type	Reset	Description
31-18	RESERVED	R	X	
17	TCCHEN	R	0h	Contains the OPT.TCCHEN value programmed by the user for the Read or Write transaction that resulted in an error.
16	TCINTEN	R	0h	Contains the OPT.TCINTEN value programmed by the user for the Read or Write transaction that resulted in an error.
15-14	RESERVED	R	X	
13-8	TCC	R	0h	Transfer Complete Code: Contains the OPT.TCC value programmed by the user for the Read or Write transaction that resulted in an error.
7-4	RESERVED	R	X	
3-0	STAT	R	0h	Transaction Status: Stores the non-zero status/error code that was detected on the read status or write status bus. MS-bit effectively serves as the read vs. write error code. If read status and write status are returned on the same cycle then the TC chooses non-zero version. If both are non-zero then write status is treated as higher priority. Encoding of errors matches the CBA spec.

Copyright © 2025 Texas Instruments Incorporated

10.1.7.2.12 ERRCMD Register (Offset = 130h) [reset = X]

ERRCMD is shown in Figure 10-157 and described in Table 10-163.

Return to the Table 10-151.

Error Command Register

Figure 10-157. ERRCMD Register

31	30	29	28	27	26	25	24
RESERVED							
W-X							
23	22	21	20	19	18	17	16
RESERVED							
W-X							
15	14	13	12	11	10	9	8
RESERVED							
W-X							
7	6	5	4	3	2	1	0
RESERVED						SET	EVAL
W-X						W-0h	W-0h

Table 10-163. ERRCMD Register Field Descriptions

Bit	Field	Type	Reset	Description
31-2	RESERVED	W	X	
1	SET	W	0h	Set TPTC error interrupt: Write of '1' to SET causes TPTC error interrupt to be pulsed unconditionally. Writes of '0' have no affect.
0	EVAL	W	0h	Evaluate state of TPTC error interrupt Write of '1' to EVAL causes TPTC error interrupt to be pulsed if any of the ERRSTAT bits are set to '1'. Writes of '0' have no affect.

Copyright © 2025 Texas Instruments Incorporated

10.1.7.2.13 RDRATE Register (Offset = 140h) [reset = X]

RDRATE is shown in Figure 10-158 and described in Table 10-164.

Return to the Table 10-151.

Read Rate Register

Figure 10-158. RDRATE Register

31	30	29	28	27	26	25	24	23	22	21	20	19	18	17	16
RESERVED															
R/W-X															
15	14	13	12	11	10	9	8	7	6	5	4	3	2	1	0
RESERVED													RDRATE		
R/W-X													R/W-0h		

Table 10-164. RDRATE Register Field Descriptions

Bit	Field	Type	Reset	Description
31-3	RESERVED	R/W	X	
2-0	RDRATE	R/W	0h	Read Rate Control: Controls the number of cycles between read commands. This is a global setting that applies to all TRs for this TC.

Copyright © 2025 Texas Instruments Incorporated

10.1.7.2.14 POPT Register (Offset = 200h) [reset = X]

POPT is shown in Figure 10-159 and described in Table 10-165.

Return to the Table 10-151.

Prog Set Options

Figure 10-159. POPT Register

31	30	29	28	27	26	25	24
RESERVED		DBG_ID		RESERVED			
R/W-X		R/W-0h		R/W-X			
23	22	21	20	19	18	17	16
RESERVED	TCCHEN	RESERVED	TCINTEN	RESERVED		TCC	
R/W-X	R/W-0h	R/W-X	R/W-0h	R/W-X		R/W-0h	
15	14	13	12	11	10	9	8
TCC				RESERVED	FWID		
R/W-0h				R/W-X	R/W-0h		
7	6	5	4	3	2	1	0
RESERVED	PRI			RESERVED		DAM	SAM
R/W-X	R/W-0h			R/W-X		R/W-0h	R/W-0h

Table 10-165. POPT Register Field Descriptions

Bit	Field	Type	Reset	Description
31-30	RESERVED	R/W	X	
29-28	DBG_ID	R/W	0h	Debug ID Value driven on the read (tptc_r_dbg_channel_id) and write (tptc_w_dbg_channel_id) command bus. Used at system level for trace/profiling of user selected transfers in systems that include this feature.
27-23	RESERVED	R/W	X	
22	TCCHEN	R/W	0h	Transfer complete chaining enable: 0: Transfer complete chaining is disabled. 1: Transfer complete chaining is enabled.
21	RESERVED	R/W	X	
20	TCINTEN	R/W	0h	Transfer complete interrupt enable: 0: Transfer complete interrupt is disabled. 1: Transfer complete interrupt is enabled.
19-18	RESERVED	R/W	X	
17-12	TCC	R/W	0h	Transfer Complete Code: The 6-bit code is used to set the relevant bit in CER or IPR of the TPCC module.
11	RESERVED	R/W	X	
10-8	FWID	R/W	0h	FIFO width control: Applies if either SAM or DAM is set to FIFO mode.
7	RESERVED	R/W	X	
6-4	PRI	R/W	0h	Transfer Priority: 0: Priority 0 - Highest priority 1: Priority 1 ... 7: Priority 7 - Lowest priority
3-2	RESERVED	R/W	X	

Copyright © 2025 Texas Instruments Incorporated

Table 10-165. POPT Register Field Descriptions (continued)

Bit	Field	Type	Reset	Description
1	DAM	R/W	0h	Destination Address Mode within an array: 0: INCR Dst addressing within an array increments. 1: FIFO Dst addressing within an array wraps around upon reaching FIFO width.
0	SAM	R/W	0h	Source Address Mode within an array: 0: INCR Src addressing within an array increments. 1: FIFO Src addressing within an array wraps around upon reaching FIFO width.

Copyright © 2025 Texas Instruments Incorporated

10.1.7.2.15 PSRC Register (Offset = 204h) [reset = 0h]

PSRC is shown in Figure 10-160 and described in Table 10-166.

Return to the Table 10-151.

Prog Set Src Address

Figure 10-160. PSRC Register

31	30	29	28	27	26	25	24	23	22	21	20	19	18	17	16	15	14	13	12	11	10	9	8	7	6	5	4	3	2	1	0
SADDR																															
R/W-0h																															

Table 10-166. PSRC Register Field Descriptions

Bit	Field	Type	Reset	Description
31-0	SADDR	R/W	0h	Source address for Program Register Set

Copyright © 2025 Texas Instruments Incorporated

10.1.7.2.16 PCNT Register (Offset = 208h) [reset = 0h]

PCNT is shown in Figure 10-161 and described in Table 10-167.

Return to the Table 10-151.

Prog Set Count

Figure 10-161. PCNT Register

31	30	29	28	27	26	25	24	23	22	21	20	19	18	17	16	15	14	13	12	11	10	9	8	7	6	5	4	3	2	1	0
BCNT																ACNT															
R/W-0h																R/W-0h															

Table 10-167. PCNT Register Field Descriptions

Bit	Field	Type	Reset	Description
31-16	BCNT	R/W	0h	B-Dimension count. Number of arrays to be transferred where each array is ACNT in length.
15-0	ACNT	R/W	0h	A-Dimension count. Number of bytes to be transferred in first dimension.

Copyright © 2025 Texas Instruments Incorporated

10.1.7.2.17 PDST Register (Offset = 20Ch) [reset = 0h]

PDST is shown in Figure 10-162 and described in Table 10-168.

Return to the Table 10-151.

Prog Set Dst Address

Figure 10-162. PDST Register

31	30	29	28	27	26	25	24	23	22	21	20	19	18	17	16	15	14	13	12	11	10	9	8	7	6	5	4	3	2	1	0
DADDR																															
R/W-0h																															

Table 10-168. PDST Register Field Descriptions

Bit	Field	Type	Reset	Description
31-0	DADDR	R/W	0h	Destination address for Program Register Set

Copyright © 2025 Texas Instruments Incorporated

10.1.7.2.18 PBIDX Register (Offset = 210h) [reset = 0h]

PBIDX is shown in Figure 10-163 and described in Table 10-169.

Return to the Table 10-151.

Prog Set B-Dim Idx

Figure 10-163. PBIDX Register

31	30	29	28	27	26	25	24	23	22	21	20	19	18	17	16	15	14	13	12	11	10	9	8	7	6	5	4	3	2	1	0
DBIDX																SBIDX															
R/W-0h																R/W-0h															

Table 10-169. PBIDX Register Field Descriptions

Bit	Field	Type	Reset	Description
31-16	DBIDX	R/W	0h	Dest B-Idx for Program Register Set: B-Idx offset between Destination arrays: Represents the offset in bytes between the starting address of each destination array [recall that there are BCNT arrays of ACNT elements]. DBIDX is always used regardless of whether DAM is Increment or FIFO mode.
15-0	SBIDX	R/W	0h	Source B-Idx for Program Register Set: B-Idx offset between Source arrays: Represents the offset in bytes between the starting address of each source array [recall that there are BCNT arrays of ACNT elements]. SBIDX is always used regardless of whether SAM is Increment or FIFO mode.

Copyright © 2025 Texas Instruments Incorporated

10.1.7.2.19 PMPPRXY Register (Offset = 214h) [reset = X]

PMPPRXY is shown in Figure 10-164 and described in Table 10-170.

Return to the Table 10-151.

Prog Set Mem Protect Proxy

Figure 10-164. PMPPRXY Register

31	30	29	28	27	26	25	24
RESERVED							
R-X							
23	22	21	20	19	18	17	16
RESERVED							
R-X							
15	14	13	12	11	10	9	8
RESERVED						SECURE	PRIV
R-X						R-0h	R-0h
7	6	5	4	3	2	1	0
RESERVED				PRIVID			
R-X				R-0h			

Table 10-170. PMPPRXY Register Field Descriptions

Bit	Field	Type	Reset	Description
31-10	RESERVED	R	X	
9	SECURE	R	0h	Secure Level: Deprecated, always read as 0.
8	PRIV	R	0h	Privilege Level: PRIV = 0 : User level privilege PRIV = 1 : Supervisor level privilege PMPPRXY.PRIV is always updated with the value from the configuration bus privilege field on any/every write to Program Set BIDX Register [trigger register]. The PRIV value for the SA Set and DF Set are copied from the value in the Program set along with the remainder of the parameter values.The privilege ID is issued on the VBusM read and write command bus such that the target endpoints can perform memory protection checks based on the PRIV of the external host that sets up the DMA transaction.
7-4	RESERVED	R	X	
3-0	PRIVID	R	0h	Privilege ID: PMPPRXY.PRIVID is always updated with the value from configuration bus privilege ID field on any/every write to Program Set BIDX Register [trigger register]. The PRIVID value for the SA Set and DF Set are copied from the value in the Program set along with the remainder of the parameter values.The privilege ID is issued on the VBusM read and write command bus such that the target endpoints can perform memory protection checks based on the privid of the external host that sets up the DMA transaction.

Copyright © 2025 Texas Instruments Incorporated

10.1.7.2.20 SAOPT Register (Offset = 240h) [reset = X]

SAOPT is shown in Figure 10-165 and described in Table 10-171.

Return to the Table 10-151.

Src Actv Set Options

Figure 10-165. SAOPT Register

31	30	29	28	27	26	25	24
RESERVED		DBG_ID		RESERVED			
R/W-X		R/W-0h		R/W-X			
23	22	21	20	19	18	17	16
RESERVED	TCCHEN	RESERVED	TCINTEN	RESERVED		TCC	
R/W-X	R/W-0h	R/W-X	R/W-0h	R/W-X		R/W-0h	
15	14	13	12	11	10	9	8
TCC				RESERVED	FWID		
R/W-0h				R/W-X	R/W-0h		
7	6	5	4	3	2	1	0
RESERVED	PRI			RESERVED		DAM	SAM
R/W-X	R/W-0h			R/W-X		R/W-0h	R/W-0h

Table 10-171. SAOPT Register Field Descriptions

Bit	Field	Type	Reset	Description
31-30	RESERVED	R/W	X	
29-28	DBG_ID	R/W	0h	Debug ID Value driven on the read (tptc_r_dbg_channel_id) and write (tptc_w_dbg_channel_id) command bus. Used at system level for trace/profiling of user selected transfers in systems that include this feature.
27-23	RESERVED	R/W	X	
22	TCCHEN	R/W	0h	Transfer complete chaining enable: 0: Transfer complete chaining is disabled. 1: Transfer complete chaining is enabled.
21	RESERVED	R/W	X	
20	TCINTEN	R/W	0h	Transfer complete interrupt enable: 0: Transfer complete interrupt is disabled. 1: Transfer complete interrupt is enabled.
19-18	RESERVED	R/W	X	
17-12	TCC	R/W	0h	Transfer Complete Code: The 6-bit code is used to set the relevant bit in CER or IPR of the TPCC module.
11	RESERVED	R/W	X	
10-8	FWID	R/W	0h	FIFO width control: Applies if either SAM or DAM is set to FIFO mode.
7	RESERVED	R/W	X	
6-4	PRI	R/W	0h	Transfer Priority: 0: Priority 0 - Highest priority 1: Priority 1 ... 7: Priority 7 - Lowest priority
3-2	RESERVED	R/W	X	

Copyright © 2025 Texas Instruments Incorporated

Table 10-171. SAOPT Register Field Descriptions (continued)

Bit	Field	Type	Reset	Description
1	DAM	R/W	0h	Destination Address Mode within an array: 0: INCR Dst addressing within an array increments. 1: FIFO Dst addressing within an array wraps around upon reaching FIFO width.
0	SAM	R/W	0h	Source Address Mode within an array: 0: INCR Src addressing within an array increments. 1: FIFO Src addressing within an array wraps around upon reaching FIFO width.

Copyright © 2025 Texas Instruments Incorporated

10.1.7.2.21 SASRC Register (Offset = 244h) [reset = 0h]

SASRC is shown in Figure 10-166 and described in Table 10-172.

Return to the Table 10-151.

Src Actv Set Src Address

Figure 10-166. SASRC Register

31	30	29	28	27	26	25	24	23	22	21	20	19	18	17	16	15	14	13	12	11	10	9	8	7	6	5	4	3	2	1	0
SADDR																															
R-0h																															

Table 10-172. SASRC Register Field Descriptions

Bit	Field	Type	Reset	Description
31-0	SADDR	R	0h	Source address for Source Active Register Set

Copyright © 2025 Texas Instruments Incorporated

10.1.7.2.22 SACNT Register (Offset = 248h) [reset = X]

SACNT is shown in Figure 10-167 and described in Table 10-173.

Return to the Table 10-151.

Src Actv Set A-Count

Figure 10-167. SACNT Register

31	30	29	28	27	26	25	24	23	22	21	20	19	18	17	16	15	14	13	12	11	10	9	8	7	6	5	4	3	2	1	0
RESERVED									ACNT																						
R-X									R-0h																						

Table 10-173. SACNT Register Field Descriptions

Bit	Field	Type	Reset	Description
31-23	RESERVED	R	X	
22-0	ACNT	R	0h	A-Dimension count. Number of bytes to be transferred in first dimension.

Copyright © 2025 Texas Instruments Incorporated

10.1.7.2.23 SADST Register (Offset = 24Ch) [reset = 0h]

SADST is shown in Figure 10-168 and described in Table 10-174.

Return to the Table 10-151.

Src Actv Set Dst Address

Figure 10-168. SADST Register

31	30	29	28	27	26	25	24	23	22	21	20	19	18	17	16	15	14	13	12	11	10	9	8	7	6	5	4	3	2	1	0
DADDR																															
R-0h																															

Table 10-174. SADST Register Field Descriptions

Bit	Field	Type	Reset	Description
31-0	DADDR	R	0h	Destination address for Source Active Register Set

Copyright © 2025 Texas Instruments Incorporated

10.1.7.2.24 SABIDX Register (Offset = 250h) [reset = 0h]

SABIDX is shown in Figure 10-169 and described in Table 10-175.

Return to the Table 10-151.

Src Actv Set B-Dim Idx

Figure 10-169. SABIDX Register

31	30	29	28	27	26	25	24	23	22	21	20	19	18	17	16	15	14	13	12	11	10	9	8	7	6	5	4	3	2	1	0
DBIDX																SBIDX															
R-0h																R-0h															

Table 10-175. SABIDX Register Field Descriptions

Bit	Field	Type	Reset	Description
31-16	DBIDX	R	0h	Dest B-Idx for Source Active Register Set: B-Idx offset between Destination arrays: Represents the offset in bytes between the starting address of each destination array [recall that there are BCNT arrays of ACNT elements]. DBIDX is always used regardless of whether DAM is Increment or FIFO mode.
15-0	SBIDX	R	0h	Source B-Idx for Source Active Register Set: B-Idx offset between Source arrays: Represents the offset in bytes between the starting address of each source array [recall that there are BCNT arrays of ACNT elements]. SBIDX is always used regardless of whether SAM is Increment or FIFO mode.

Copyright © 2025 Texas Instruments Incorporated

10.1.7.2.25 SAMPPRXY Register (Offset = 254h) [reset = X]

SAMPPRXY is shown in Figure 10-170 and described in Table 10-176.

Return to the Table 10-151.

Src Actv Set Mem Protect Proxy

Figure 10-170. SAMPPRXY Register

31	30	29	28	27	26	25	24
RESERVED							
R-X							
23	22	21	20	19	18	17	16
RESERVED							
R-X							
15	14	13	12	11	10	9	8
RESERVED						SECURE	PRIV
R-X						R-0h	R-0h
7	6	5	4	3	2	1	0
RESERVED				PRIVID			
R-X				R-0h			

Table 10-176. SAMPPRXY Register Field Descriptions

Bit	Field	Type	Reset	Description
31-10	RESERVED	R	X	
9	SECURE	R	0h	Secure Level: Deprecated, always read as 0.
8	PRIV	R	0h	Privilege Level: PRIV = 0 : User level privilege PRIV = 1 : Supervisor level privilege PMPPRXY.PRIV is always updated with the value from the configuration bus privilege field on any/every write to Program Set BIDX Register [trigger register]. The PRIV value for the SA Set and DF Set are copied from the value in the Program set along with the remainder of the parameter values.The privilege ID is issued on the VBusM read and write command bus such that the target endpoints can perform memory protection checks based on the PRIV of the external host that sets up the DMA transaction.
7-4	RESERVED	R	X	
3-0	PRIVID	R	0h	Privilege ID: PMPPRXY.PRIVID is always updated with the value from configuration bus privilege ID field on any/every write to Program Set BIDX Register [trigger register]. The PRIVID value for the SA Set and DF Set are copied from the value in the Program set along with the remainder of the parameter values.The privilege ID is issued on the VBusM read and write command bus such that the target endpoints can perform memory protection checks based on the privid of the external host that sets up the DMA transaction.

Copyright © 2025 Texas Instruments Incorporated

10.1.7.2.26 SACNTRLD Register (Offset = 258h) [reset = X]

SACNTRLD is shown in Figure 10-171 and described in Table 10-177.

Return to the Table 10-151.

Src Actv Set Cnt Reload

Figure 10-171. SACNTRLD Register

31	30	29	28	27	26	25	24	23	22	21	20	19	18	17	16	15	14	13	12	11	10	9	8	7	6	5	4	3	2	1	0
RESERVED																ACNTRLD															
R-X																R-0h															

Table 10-177. SACNTRLD Register Field Descriptions

Bit	Field	Type	Reset	Description
31-16	RESERVED	R	X	
15-0	ACNTRLD	R	0h	A-Cnt Reload value for Source Active Register set. Value copied from PCNT.ACNT: Represents the originally programmed value of ACNT. The Reload value is used to reinitialize ACNT after each array is serviced [i.e. ACNT decrements to 0]. by the Src offset in bytes between the starting address of each source array [recall that there are BCNT arrays of ACNT bytes]

Copyright © 2025 Texas Instruments Incorporated

10.1.7.2.27 SASRCBREF Register (Offset = 25Ch) [reset = 0h]

SASRCBREF is shown in Figure 10-172 and described in Table 10-178.

Return to the Table 10-151.

Src Actv Set Src Addr B-Reference

Figure 10-172. SASRCBREF Register

31	30	29	28	27	26	25	24	23	22	21	20	19	18	17	16	15	14	13	12	11	10	9	8	7	6	5	4	3	2	1	0
SADDRBREF																															
R-0h																															

Table 10-178. SASRCBREF Register Field Descriptions

Bit	Field	Type	Reset	Description
31-0	SADDRBREF	R	0h	Source address reference for Source Active Register Set: Represents the starting address for the array currently being read. The next array's starting address is calculated as the 'reference address' plus the 'source b-idx' value.

Copyright © 2025 Texas Instruments Incorporated

10.1.7.2.28 SADSTBREF Register (Offset = 260h) [reset = 0h]

SADSTBREF is shown in Figure 10-173 and described in Table 10-179.

Return to the Table 10-151.

Src Actv Set Dst Addr B-Reference

Figure 10-173. SADSTBREF Register

31	30	29	28	27	26	25	24	23	22	21	20	19	18	17	16	15	14	13	12	11	10	9	8	7	6	5	4	3	2	1	0
DADDRBREF																															
R-0h																															

Table 10-179. SADSTBREF Register Field Descriptions

Bit	Field	Type	Reset	Description
31-0	DADDRBREF	R	0h	Dst address reference is not applicable for Src Active Register Set. Reads return 0x0.

Copyright © 2025 Texas Instruments Incorporated

10.1.7.2.29 SABCNT Register (Offset = 264h) [reset = X]

SABCNT is shown in Figure 10-174 and described in Table 10-180.

Return to the Table 10-151.

Src Actv Set B-Count

Figure 10-174. SABCNT Register

31	30	29	28	27	26	25	24	23	22	21	20	19	18	17	16	15	14	13	12	11	10	9	8	7	6	5	4	3	2	1	0
RESERVED																BCNT															
R-X																R-0h															

Table 10-180. SABCNT Register Field Descriptions

Bit	Field	Type	Reset	Description
31-16	RESERVED	R	X	
15-0	BCNT	R	0h	B-Dimension count: Number of arrays to be transferred where each array is ACNT in length. Count Remaining for Src Active Register Set. Represents the amount of data remaining to be read. Initial value is copied from PCNT. TC decrements ACNT and BCNT as necessary after each read command is issued. Final value should be 0 when TR is complete.

Copyright © 2025 Texas Instruments Incorporated

10.1.7.2.30 DFCNTRLD Register (Offset = 280h) [reset = X]

DFCNTRLD is shown in Figure 10-175 and described in Table 10-181.

Return to the Table 10-151.

Dst FIFO Set Cnt Reload

Figure 10-175. DFCNTRLD Register

31	30	29	28	27	26	25	24	23	22	21	20	19	18	17	16	15	14	13	12	11	10	9	8	7	6	5	4	3	2	1	0
RESERVED																ACNTRLD															
R-X																R-0h															

Table 10-181. DFCNTRLD Register Field Descriptions

Bit	Field	Type	Reset	Description
31-16	RESERVED	R	X	
15-0	ACNTRLD	R	0h	A-Cnt Reload value for Destination FIFO Register set. Value copied from PCNT.ACNT: Represents the originally programmed value of ACNT. The Reload value is used to reinitialize ACNT after each array is serviced [i.e. ACNT decrements to 0]. by the Src offset in bytes between the starting address of each source array [recall that there are BCNT arrays of ACNT bytes]

Copyright © 2025 Texas Instruments Incorporated

10.1.7.2.31 DFSRCBREF Register (Offset = 284h) [reset = 0h]

DFSRCBREF is shown in Figure 10-176 and described in Table 10-182.

Return to the Table 10-151.

Dst FIFO Set Src Addr B-Reference

Figure 10-176. DFSRCBREF Register

31	30	29	28	27	26	25	24	23	22	21	20	19	18	17	16	15	14	13	12	11	10	9	8	7	6	5	4	3	2	1	0
SADDRBREF																															
R-0h																															

Table 10-182. DFSRCBREF Register Field Descriptions

Bit	Field	Type	Reset	Description
31-0	SADDRBREF	R	0h	Source address reference for Destination FIFO Register Set: Represents the starting address for the array currently being read. The next array's starting address is calculated as the 'reference address' plus the 'source b-idx' value.

Copyright © 2025 Texas Instruments Incorporated

10.1.7.2.32 DFOPT0 Register (Offset = 300h) [reset = X]

DFOPT0 is shown in Figure 10-177 and described in Table 10-183.

Return to the Table 10-151.

Dst FIFO Set Options

Figure 10-177. DFOPT0 Register

31	30	29	28	27	26	25	24
RESERVED		DBG_ID		RESERVED			
R/W-X		R/W-0h		R/W-X			
23	22	21	20	19	18	17	16
RESERVED	TCCHEN	RESERVED	TCINTEN	RESERVED		TCC	
R/W-X	R/W-0h	R/W-X	R/W-0h	R/W-X		R/W-0h	
15	14	13	12	11	10	9	8
TCC				RESERVED	FWID		
R/W-0h				R/W-X	R/W-0h		
7	6	5	4	3	2	1	0
RESERVED	PRI			RESERVED		DAM	SAM
R/W-X	R/W-0h			R/W-X		R/W-0h	R/W-0h

Table 10-183. DFOPT0 Register Field Descriptions

Bit	Field	Type	Reset	Description
31-30	RESERVED	R/W	X	
29-28	DBG_ID	R/W	0h	Debug ID Value driven on the read (tptc_r_dbg_channel_id) and write (tptc_w_dbg_channel_id) command bus. Used at system level for trace/profiling of user selected transfers in systems that include this feature.
27-23	RESERVED	R/W	X	
22	TCCHEN	R/W	0h	Transfer complete chaining enable: 0: Transfer complete chaining is disabled. 1: Transfer complete chaining is enabled.
21	RESERVED	R/W	X	
20	TCINTEN	R/W	0h	Transfer complete interrupt enable: 0: Transfer complete interrupt is disabled. 1: Transfer complete interrupt is enabled.
19-18	RESERVED	R/W	X	
17-12	TCC	R/W	0h	Transfer Complete Code: The 6-bit code is used to set the relevant bit in CER or IPR of the TPCC module.
11	RESERVED	R/W	X	
10-8	FWID	R/W	0h	FIFO width control: Applies if either SAM or DAM is set to FIFO mode.
7	RESERVED	R/W	X	
6-4	PRI	R/W	0h	Transfer Priority: 0: Priority 0 - Highest priority 1: Priority 1 ... 7: Priority 7 - Lowest priority
3-2	RESERVED	R/W	X	

Copyright © 2025 Texas Instruments Incorporated

Table 10-183. DFOPT0 Register Field Descriptions (continued)

Bit	Field	Type	Reset	Description
1	DAM	R/W	0h	Destination Address Mode within an array: 0: INCR Dst addressing within an array increments. 1: FIFO Dst addressing within an array wraps around upon reaching FIFO width.
0	SAM	R/W	0h	Source Address Mode within an array: 0: INCR Src addressing within an array increments. 1: FIFO Src addressing within an array wraps around upon reaching FIFO width.

Copyright © 2025 Texas Instruments Incorporated

10.1.7.2.33 DFSRC0 Register (Offset = 304h) [reset = 0h]

DFSRC0 is shown in Figure 10-178 and described in Table 10-184.

Return to the Table 10-151.

Dst FIFO Set Src Address

Figure 10-178. DFSRC0 Register

31	30	29	28	27	26	25	24	23	22	21	20	19	18	17	16	15	14	13	12	11	10	9	8	7	6	5	4	3	2	1	0
SADDR																															
R-0h																															

Table 10-184. DFSRC0 Register Field Descriptions

Bit	Field	Type	Reset	Description
31-0	SADDR	R	0h	Source address is not applicable for Dst FIFO Register Set: Reads return 0x0.

Copyright © 2025 Texas Instruments Incorporated

10.1.7.2.34 DFACNT0 Register (Offset = 308h) [reset = X]

DFACNT0 is shown in Figure 10-179 and described in Table 10-185.

Return to the Table 10-151.

Dst FIFO Set A-Count

Figure 10-179. DFACNT0 Register

31	30	29	28	27	26	25	24	23	22	21	20	19	18	17	16	15	14	13	12	11	10	9	8	7	6	5	4	3	2	1	0
RESERVED									ACNT																						
R-X									R-0h																						

Table 10-185. DFACNT0 Register Field Descriptions

Bit	Field	Type	Reset	Description
31-23	RESERVED	R	X	
22-0	ACNT	R	0h	A-Dimension count. Number of bytes to be transferred infirst dimension.

Copyright © 2025 Texas Instruments Incorporated

10.1.7.2.35 DFDST0 Register (Offset = 30Ch) [reset = 0h]

DFDST0 is shown in Figure 10-180 and described in Table 10-186.

Return to the Table 10-151.

Dst FIFO Set Dst Address

Figure 10-180. DFDST0 Register

31	30	29	28	27	26	25	24	23	22	21	20	19	18	17	16	15	14	13	12	11	10	9	8	7	6	5	4	3	2	1	0
DADDR																															
R-0h																															

Table 10-186. DFDST0 Register Field Descriptions

Bit	Field	Type	Reset	Description
31-0	DADDR	R	0h	Destination address for Dst FIFO Register Set: Initial value is copied from PDST.DADDR. TC updates value according to destination addressing mode [OPT.SAM] and/or dest index value [BIDX.DBIDX] after each write command is issued. When a TR is complete the final value should be the address of the last write command issued.

Copyright © 2025 Texas Instruments Incorporated

10.1.7.2.36 DFBIDX0 Register (Offset = 310h) [reset = 0h]

DFBIDX0 is shown in Figure 10-181 and described in Table 10-187.

Return to the Table 10-151.

Dst FIFO Set B-Dim Idx

Figure 10-181. DFBIDX0 Register

31	30	29	28	27	26	25	24	23	22	21	20	19	18	17	16	15	14	13	12	11	10	9	8	7	6	5	4	3	2	1	0
DBIDX																SBIDX															
R-0h																R-0h															

Table 10-187. DFBIDX0 Register Field Descriptions

Bit	Field	Type	Reset	Description
31-16	DBIDX	R	0h	Dest B-Idx for Dest FIFO Register Set. Value copied from PBIDX: B-Idx offset between Destination arrays: Represents the offset in bytes between the starting address of each destination array [recall that there are BCNT arrays of ACNT elements]. DBIDX is always used regardless of whether DAM is Increment or FIFO mode.
15-0	SBIDX	R	0h	Src B-Idx for Dest FIFO Register Set. Value copied from PBIDX: B-Idx offset between Source arrays: Represents the offset in bytes between the starting address of each source array [recall that there are BCNT arrays of ACNT elements]. SBIDX is always used regardless of whether SAM is Increment or FIFO mode.

Copyright © 2025 Texas Instruments Incorporated

10.1.7.2.37 DFMPPRXY0 Register (Offset = 314h) [reset = X]

DFMPPRXY0 is shown in Figure 10-182 and described in Table 10-188.

Return to the Table 10-151.

Dst FIFO Set Mem Protect Proxy

Figure 10-182. DFMPPRXY0 Register

31	30	29	28	27	26	25	24
RESERVED							
R-X							
23	22	21	20	19	18	17	16
RESERVED							
R-X							
15	14	13	12	11	10	9	8
RESERVED						SECURE	PRIV
R-X						R-0h	R-0h
7	6	5	4	3	2	1	0
RESERVED				PRIVID			
R-X				R-0h			

Table 10-188. DFMPPRXY0 Register Field Descriptions

Bit	Field	Type	Reset	Description
31-10	RESERVED	R	X	
9	SECURE	R	0h	Secure Level: Deprecated, always read as 0.
8	PRIV	R	0h	Privilege Level: PRIV = 0 : User level privilege PRIV = 1 : Supervisor level privilege PMPPRXY.PRIV is always updated with the value from the configuration bus privilege field on any/every write to Program Set BIDX Register [trigger register]. The PRIV value for the SA Set and DF Set are copied from the value in the Program set along with the remainder of the parameter values.The privilege ID is issued on the VBusM read and write command bus such that the target endpoints can perform memory protection checks based on the PRIV of the external host that sets up the DMA transaction.
7-4	RESERVED	R	X	
3-0	PRIVID	R	0h	Privilege ID: PMPPRXY.PRIVID is always updated with the value from configuration bus privilege ID field on any/every write to Program Set BIDX Register [trigger register]. The PRIVID value for the SA Set and DF Set are copied from the value in the Program set along with the remainder of the parameter values.The privilege ID is issued on the VBusM read and write command bus such that the target endpoints can perform memory protection checks based on the privid of the external host that sets up the DMA transaction.

Copyright © 2025 Texas Instruments Incorporated

10.1.7.2.38 DFBCNT0 Register (Offset = 318h) [reset = X]

DFBCNT0 is shown in Figure 10-183 and described in Table 10-189.

Return to the Table 10-151.

Dst FIFO Set B-Count

Figure 10-183. DFBCNT0 Register

31	30	29	28	27	26	25	24	23	22	21	20	19	18	17	16	15	14	13	12	11	10	9	8	7	6	5	4	3	2	1	0
RESERVED																BCNT															
R-X																R-0h															

Table 10-189. DFBCNT0 Register Field Descriptions

Bit	Field	Type	Reset	Description
31-16	RESERVED	R	X	
15-0	BCNT	R	0h	B-Count Remaining for Dst Register Set: Number of arrays to be transferred where each array is ACNT in length. Represents the amount of data remaining to be written. Initial value is copied from PCNT. TC decrements ACNT and BCNT as necessary after each write dataphase is issued. Final value should be 0 when TR is complete.

Copyright © 2025 Texas Instruments Incorporated

10.1.7.2.39 DFOPT1 Register (Offset = 340h) [reset = X]

DFOPT1 is shown in Figure 10-184 and described in Table 10-190.

Return to the Table 10-151.

Dst FIFO Set Options

Figure 10-184. DFOPT1 Register

31	30	29	28	27	26	25	24
RESERVED		DBG_ID		RESERVED			
R/W-X		R/W-0h		R/W-X			
23	22	21	20	19	18	17	16
RESERVED	TCCHEN	RESERVED	TCINTEN	RESERVED		TCC	
R/W-X	R/W-0h	R/W-X	R/W-0h	R/W-X		R/W-0h	
15	14	13	12	11	10	9	8
TCC				RESERVED	FWID		
R/W-0h				R/W-X	R/W-0h		
7	6	5	4	3	2	1	0
RESERVED	PRI			RESERVED		DAM	SAM
R/W-X	R/W-0h			R/W-X		R/W-0h	R/W-0h

Table 10-190. DFOPT1 Register Field Descriptions

Bit	Field	Type	Reset	Description
31-30	RESERVED	R/W	X	
29-28	DBG_ID	R/W	0h	Debug ID Value driven on the read (tptc_r_dbg_channel_id) and write (tptc_w_dbg_channel_id) command bus. Used at system level for trace/profiling of user selected transfers in systems that include this feature.
27-23	RESERVED	R/W	X	
22	TCCHEN	R/W	0h	Transfer complete chaining enable: 0: Transfer complete chaining is disabled. 1: Transfer complete chaining is enabled.
21	RESERVED	R/W	X	
20	TCINTEN	R/W	0h	Transfer complete interrupt enable: 0: Transfer complete interrupt is disabled. 1: Transfer complete interrupt is enabled.
19-18	RESERVED	R/W	X	
17-12	TCC	R/W	0h	Transfer Complete Code: The 6-bit code is used to set the relevant bit in CER or IPR of the TPCC module.
11	RESERVED	R/W	X	
10-8	FWID	R/W	0h	FIFO width control: Applies if either SAM or DAM is set to FIFO mode.
7	RESERVED	R/W	X	
6-4	PRI	R/W	0h	Transfer Priority: 0: Priority 0 - Highest priority 1: Priority 1 ... 7: Priority 7 - Lowest priority
3-2	RESERVED	R/W	X	

Copyright © 2025 Texas Instruments Incorporated

Table 10-190. DFOPT1 Register Field Descriptions (continued)

Bit	Field	Type	Reset	Description
1	DAM	R/W	0h	Destination Address Mode within an array: 0: INCR Dst addressing within an array increments. 1: FIFO Dst addressing within an array wraps around upon reaching FIFO width.
0	SAM	R/W	0h	Source Address Mode within an array: 0: INCR Src addressing within an array increments. 1: FIFO Src addressing within an array wraps around upon reaching FIFO width.

Copyright © 2025 Texas Instruments Incorporated

10.1.7.2.40 DFSRC1 Register (Offset = 344h) [reset = 0h]

DFSRC1 is shown in Figure 10-185 and described in Table 10-191.

Return to the Table 10-151.

Dst FIFO Set Src Address

Figure 10-185. DFSRC1 Register

31	30	29	28	27	26	25	24	23	22	21	20	19	18	17	16	15	14	13	12	11	10	9	8	7	6	5	4	3	2	1	0
SADDR																															
R-0h																															

Table 10-191. DFSRC1 Register Field Descriptions

Bit	Field	Type	Reset	Description
31-0	SADDR	R	0h	Source address is not applicable for Dst FIFO Register Set: Reads return 0x0.

Copyright © 2025 Texas Instruments Incorporated

10.1.7.2.41 DFACNT1 Register (Offset = 348h) [reset = X]

DFACNT1 is shown in Figure 10-186 and described in Table 10-192.

Return to the Table 10-151.

Dst FIFO Set A-Count

Figure 10-186. DFACNT1 Register

31	30	29	28	27	26	25	24	23	22	21	20	19	18	17	16	15	14	13	12	11	10	9	8	7	6	5	4	3	2	1	0
RESERVED									ACNT																						
R-X									R-0h																						

Table 10-192. DFACNT1 Register Field Descriptions

Bit	Field	Type	Reset	Description
31-23	RESERVED	R	X	
22-0	ACNT	R	0h	A-Dimension count. Number of bytes to be transferred infirst dimension.

Copyright © 2025 Texas Instruments Incorporated

10.1.7.2.42 DFDST1 Register (Offset = 34Ch) [reset = 0h]

DFDST1 is shown in Figure 10-187 and described in Table 10-193.

Return to the Table 10-151.

Dst FIFO Set Dst Address

Figure 10-187. DFDST1 Register

31	30	29	28	27	26	25	24	23	22	21	20	19	18	17	16	15	14	13	12	11	10	9	8	7	6	5	4	3	2	1	0
DADDR																															
R-0h																															

Table 10-193. DFDST1 Register Field Descriptions

Bit	Field	Type	Reset	Description
31-0	DADDR	R	0h	Destination address for Dst FIFO Register Set: Initial value is copied from PDST.DADDR. TC updates value according to destination addressing mode [OPT.SAM] and/or dest index value [BIDX.DBIDX] after each write command is issued. When a TR is complete the final value should be the address of the last write command issued.

Copyright © 2025 Texas Instruments Incorporated

10.1.7.2.43 DFBIDX1 Register (Offset = 350h) [reset = 0h]

DFBIDX1 is shown in Figure 10-188 and described in Table 10-194.

Return to the Table 10-151.

Dst FIFO Set B-Dim Idx

Figure 10-188. DFBIDX1 Register

31	30	29	28	27	26	25	24	23	22	21	20	19	18	17	16	15	14	13	12	11	10	9	8	7	6	5	4	3	2	1	0
DBIDX																SBIDX															
R-0h																R-0h															

Table 10-194. DFBIDX1 Register Field Descriptions

Bit	Field	Type	Reset	Description
31-16	DBIDX	R	0h	Dest B-Idx for Dest FIFO Register Set. Value copied from PBIDX: B-Idx offset between Destination arrays: Represents the offset in bytes between the starting address of each destination array [recall that there are BCNT arrays of ACNT elements]. DBIDX is always used regardless of whether DAM is Increment or FIFO mode.
15-0	SBIDX	R	0h	Src B-Idx for Dest FIFO Register Set. Value copied from PBIDX: B-Idx offset between Source arrays: Represents the offset in bytes between the starting address of each source array [recall that there are BCNT arrays of ACNT elements]. SBIDX is always used regardless of whether SAM is Increment or FIFO mode.

Copyright © 2025 Texas Instruments Incorporated

10.1.7.2.44 DFMPPRXY1 Register (Offset = 354h) [reset = X]

DFMPPRXY1 is shown in Figure 10-189 and described in Table 10-195.

Return to the Table 10-151.

Dst FIFO Set Mem Protect Proxy

Figure 10-189. DFMPPRXY1 Register

31	30	29	28	27	26	25	24
RESERVED							
R-X							
23	22	21	20	19	18	17	16
RESERVED							
R-X							
15	14	13	12	11	10	9	8
RESERVED						SECURE	PRIV
R-X						R-0h	R-0h
7	6	5	4	3	2	1	0
RESERVED				PRIVID			
R-X				R-0h			

Table 10-195. DFMPPRXY1 Register Field Descriptions

Bit	Field	Type	Reset	Description
31-10	RESERVED	R	X	
9	SECURE	R	0h	Secure Level: Deprecated, always read as 0.
8	PRIV	R	0h	Privilege Level: PRIV = 0 : User level privilege PRIV = 1 : Supervisor level privilege PMPPRXY.PRIV is always updated with the value from the configuration bus privilege field on any/every write to Program Set BIDX Register [trigger register]. The PRIV value for the SA Set and DF Set are copied from the value in the Program set along with the remainder of the parameter values.The privilege ID is issued on the VBusM read and write command bus such that the target endpoints can perform memory protection checks based on the PRIV of the external host that sets up the DMA transaction.
7-4	RESERVED	R	X	
3-0	PRIVID	R	0h	Privilege ID: PMPPRXY.PRIVID is always updated with the value from configuration bus privilege ID field on any/every write to Program Set BIDX Register [trigger register]. The PRIVID value for the SA Set and DF Set are copied from the value in the Program set along with the remainder of the parameter values.The privilege ID is issued on the VBusM read and write command bus such that the target endpoints can perform memory protection checks based on the privid of the external host that sets up the DMA transaction.

Copyright © 2025 Texas Instruments Incorporated

10.1.7.2.45 DFBCNT1 Register (Offset = 358h) [reset = X]

DFBCNT1 is shown in Figure 10-190 and described in Table 10-196.

Return to the Table 10-151.

Dst FIFO Set B-Count

Figure 10-190. DFBCNT1 Register

31	30	29	28	27	26	25	24	23	22	21	20	19	18	17	16	15	14	13	12	11	10	9	8	7	6	5	4	3	2	1	0
RESERVED																BCNT															
R-X																R-0h															

Table 10-196. DFBCNT1 Register Field Descriptions

Bit	Field	Type	Reset	Description
31-16	RESERVED	R	X	
15-0	BCNT	R	0h	B-Count Remaining for Dst Register Set: Number of arrays to be transferred where each array is ACNT in length. Represents the amount of data remaining to be written. Initial value is copied from PCNT. TC decrements ACNT and BCNT as necessary after each write dataphase is issued. Final value should be 0 when TR is complete.

Copyright © 2025 Texas Instruments Incorporated

11.1 General Connectivity Peripherals

11.1.1 General-Purpose Input/Output (GIO) Module

This chapter describes the general-purpose input/output (GIO) module. The GIO module provides the family of devices with input/output (I/O) capability. The I/O pins are bidirectional and bit-programmable. The GIO module also supports external interrupt capability.

Note

The "GIO" module is also known as the "GPIO" module in other TI MCU and MPU devices. The two terms are used interchangeably and represent the general use I/O module of the device.

11.1.1.1 Overview

The The GIO module offers general-purpose input and output capability. It supports up to eight 8-bit ports for a total of up to 64 GIO terminals. Each of these 64 terminals can be independently configured as input or output and configured as required by the application. The GIO module also supports generation of interrupts whenever a rising edge or falling edge or any toggle is detected on up to 32 of these GIO terminals. Refer to the device datasheet for identifying the number of GIO ports supported and the GIO terminals capable of generating an interrupt.

The main features of the GIO module are summarized as follows:

- Allows each GIO terminal to be configured for general-purpose input or output functions
- Supports programmable pull directions on each input GIO terminal
- Supports GIO output in push/pull or open-drain modes
- Allows up to 32 GIO terminals to be used for generating interrupt requests

These 8-bit ports have the following names in *MSS_GIO Registers*:

- GIOA[7:0]
  - MSS_GIO 0 - 7
  - RCSS_GIO 32 - 39
- GIOB[7:0]
  - MSS_GIO 8 - 15
  - RCSS_GIO 40 - 47
- GIOC[7:0]
  - MSS_GIO 16 - 23
  - RCSS_GIO 48 - 55
- GIOD[7:0]
  - MSS_GIO 24 -31
  - RCSS_GIO 56 - 63

Copyright © 2025 Texas Instruments Incorporated

11.1.1.2 Quick Start Guide

The GIO module comprises two separate components: an input/output (I/O) block and an interrupt generation block. Figure 11-1 and Figure 11-2 show what you should do after reset to configure the GIO module as I/O or for generating interrupts.

In GIO interrupt service routine, you shall read the GIO offset register (GIOOFF1 or GIOOFF2, depending on high-/low-level interrupt) to clear the flag and find the pending interrupt GIO channel.

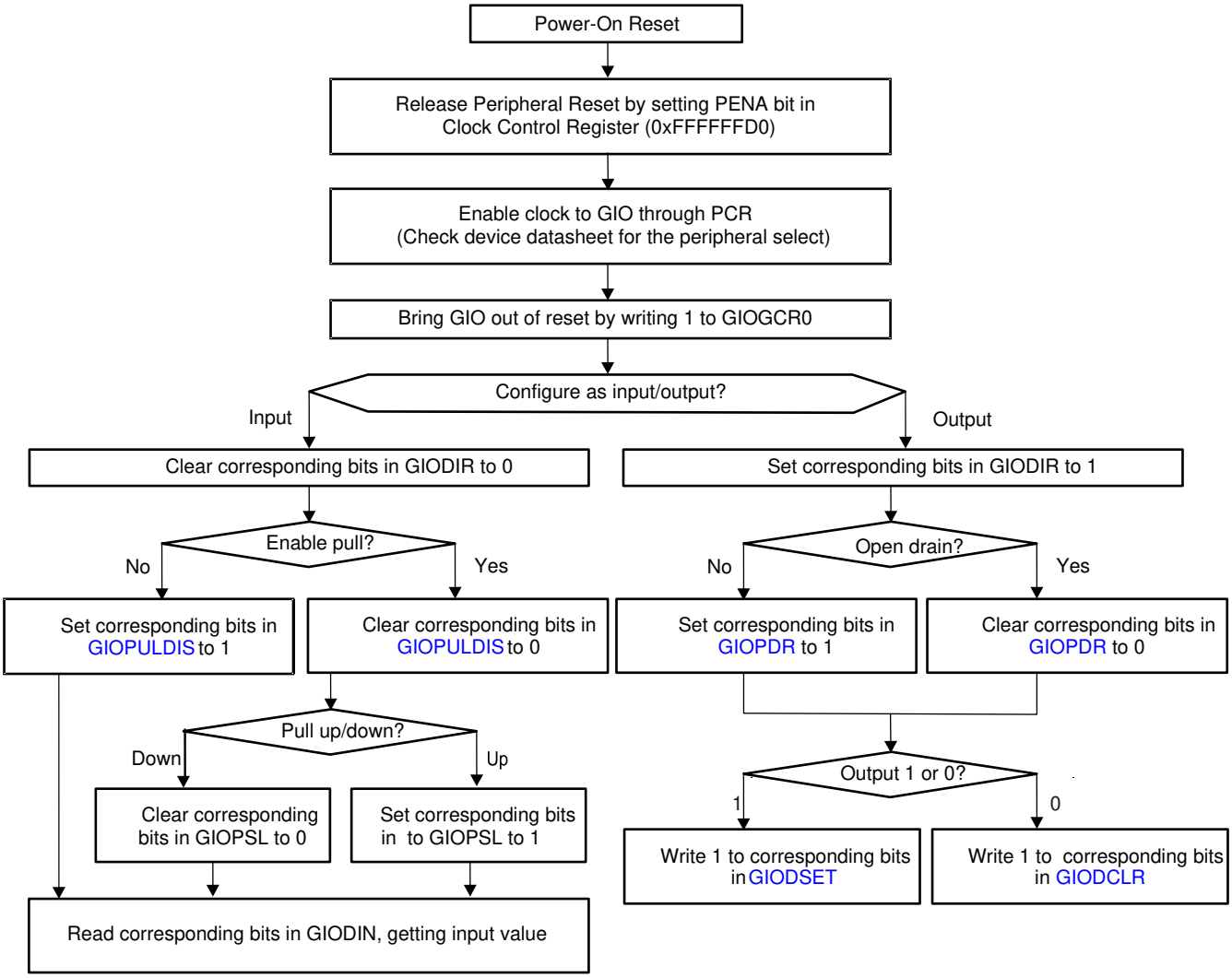

Figure 11-1. I/O Function Quick Start Flow Chart

Copyright © 2025 Texas Instruments Incorporated

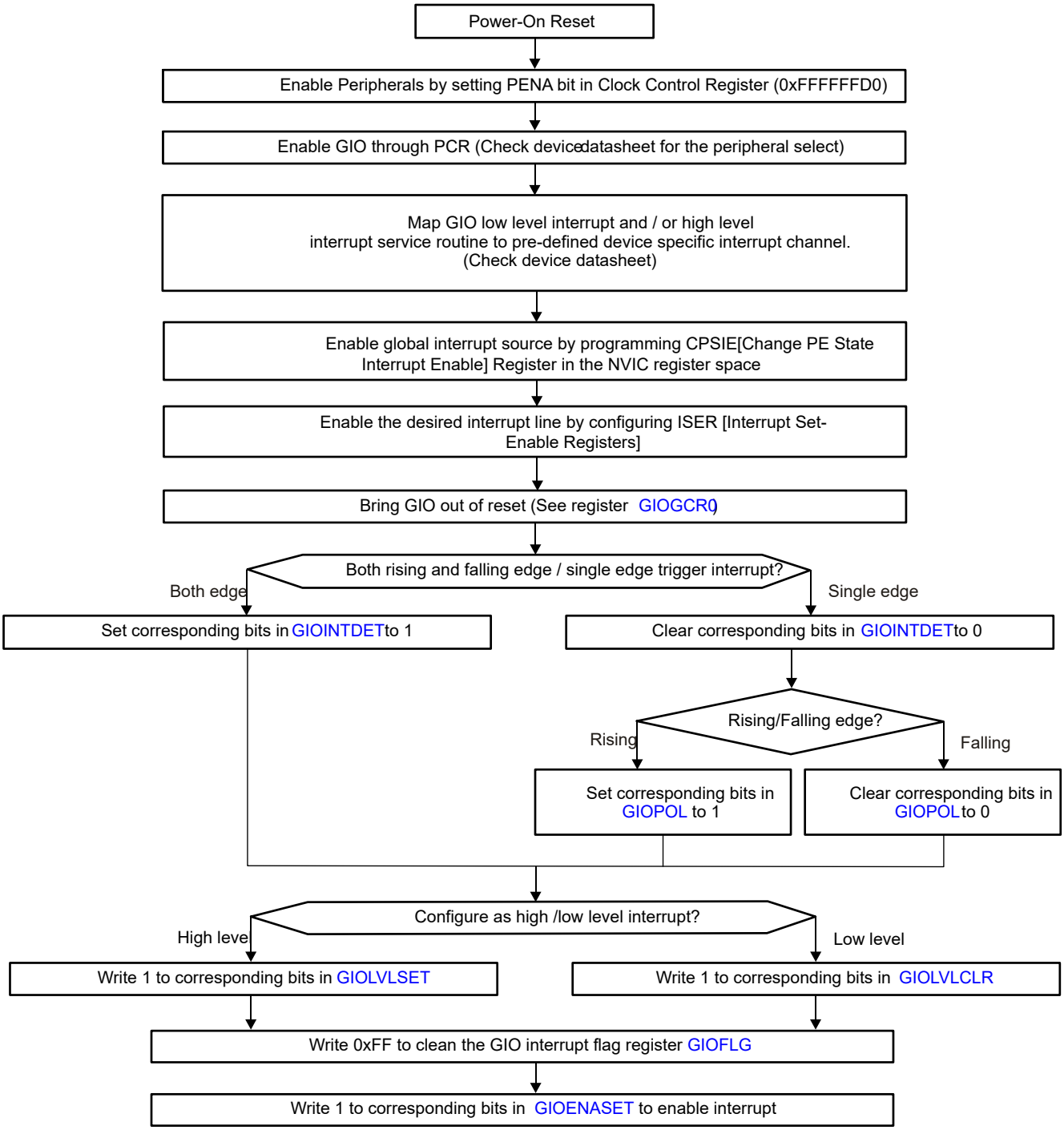

Figure 11-2. Interrupt Generation Function Quick Start Flow Chart

Copyright © 2025 Texas Instruments Incorporated

11.1.1.3 Functional Description of GIO Module

As shown in Figure 11-3, the GIO module comprises of two separate components: an input/output (I/O) block and an interrupt block.

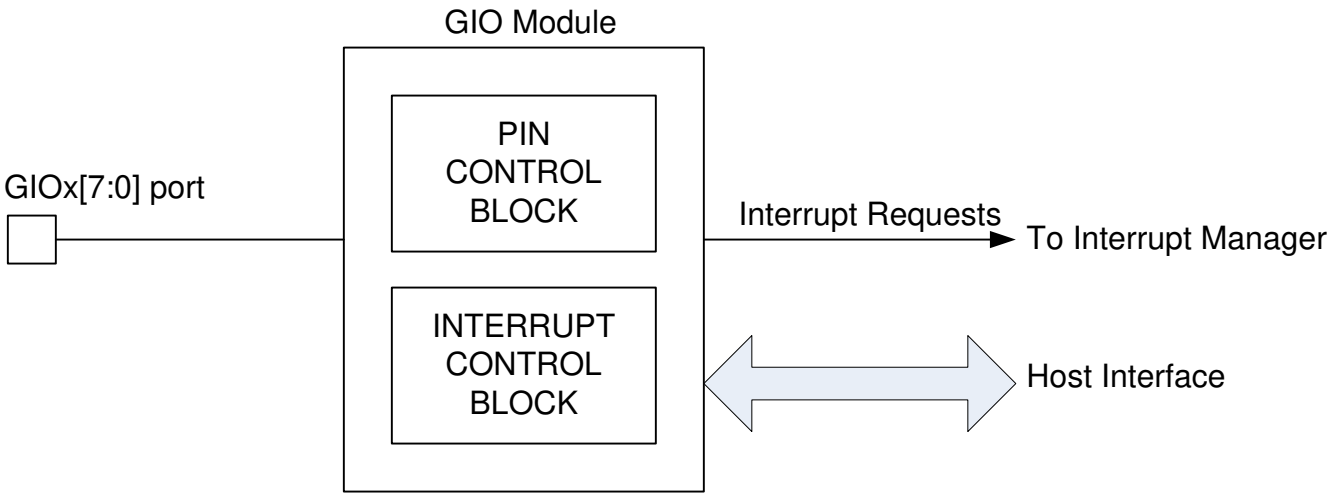

Figure 11-3. GIO Module Diagram

11.1.1.3.1 I/O Functions

The I/O block allows each GIO terminal to be configured for use as a general-purpose input or output in the application. The GIO module supports multiple registers to control the various aspects of the input and output functions. These are described as follows.

- Data direction (GIODIR)

  Configures GIO terminal(s) as input (default) or output through the GIODIRx registers.
- Data input (GIODIN)

  Reflects the logic level on GIO terminals in the GIODINx registers. A high voltage (V_{IH} or greater) applied to the pin causes a high value (1) in the data input register (GIODIN[7:0]). When a low voltage (V_{IL} or less) is applied to the pin, the data input register reads a low value (0). The V_{IH} and V_{IL} values are device specific and can be found in the device datasheet.
- Data output (GIODOUT)

  Configures the logic level to be output on GIO terminal(s) configured as outputs. A low value (0) written to the data output register forces the pin to a low output voltage (V_{OL} or lower). A high value (1) written to the data output register (GIODOUTx) forces the pin to a high output voltage (V_{OH} or higher) if the open drain functionality is disabled (GIOPDRx[7:0]). If open drain functionality is enabled, a high value (1) written to the data output register forces the pin to a high-impedance state (Z).
- Data set (GIODSET)

  Allows logic HIGH to be output on GIO terminal(s) configured as outputs by writing 1's to the required bits in the GIODSETx registers. If open drain functionality is enabled, a high value (1) written to the data output register forces the pin to a high-impedance state (Z). The GIODSETx registers eliminate the need for the application to perform a read-modify-write operation when it needs to set one or more GIO pin(s).
- Data clear (GIODCLR)

  Allows logic LOW to be output on GIO terminal(s) configured as outputs by writing 1s to the required bits in the GIODCLRx registers. The GIODCLRx registers eliminate the need for the application to perform a read-modify-write operation when it needs to clear one or more GIO pin(s).
- Open drain (GIOPDR)

Copyright © 2025 Texas Instruments Incorporated

Open drain functionality is enabled or disabled (default) using the open drain register GIOPDR[7:0] register. If open-drain mode output is enabled on a pin, a high value (1) written to the data output register (GIODOUTx[7:0]) forces the pin to a high impedance state (Z).

- Pull disable (GIOPULDIS)

  Disables the internal pull on GIO terminal(s) configured as inputs by writing to the GIOPULDISx registers.
- Pull select (GIOPSL)

  Selects internal pull down (default) or pull up on GIO terminal(s) configured as inputs by writing to the GIOPULSELx registers.

Refer to the specific device's datasheet to identify the number of GIO ports as well as the input and output functions supported. Some devices may not support the programmable pull controls. In that case, the pull disable and the pull select register controls will not work.

11.1.1.3.2 Interrupt Function

The GIO module supports up to 32 terminals to be configured for generating an interrupt to the host processor through the Interrupt Manager (NVIC/IM). The main functions of the interrupt block are:

- Select the GIO pin(s) that is/are used to generate interrupt(s)

  This is done via the interrupt enable set and clear registers, GIOENASET and GIOENACLR.
- Select the edge on the selected GIO pin(s) that is/are used to generate interrupt(s): rising/falling/both

  Rising or falling edge can be selected via the GIOPOL register. If interrupt is required to be generated on both rising and falling edges, this can be configured via the GIOINTDET register.
- Select the interrupt priority

  Low- or high-level interrupt can be selected through the GIOLVLSET and GIOLVLCLR registers.
- Individual interrupt flags are set in the GIOFLG register

The terminals on GIO ports A through D are all interrupt-capable and can be used to handle either general I/O functions or interrupt requests. Each interrupt request can be connected to the NVIC/IM at one of two different levels – High (or A) and Low (or B), depending on the NVIC/IM channel number. The NVIC/IM has an inherent priority scheme so that a request on a lower number channel has a higher priority than a request on a higher number channel. Refer the device datasheet to identify the NVIC/IM channel numbers for the GIO level A and level B interrupt requests. Also note that the interrupt priority of level A and level B interrupt handling blocks can be re-programmed in the NVIC/IM.

Copyright © 2025 Texas Instruments Incorporated

11.1.1.3.3 GIO Block Diagram

The GIO block diagram (Figure 11-4) represents the flow of information through a pin. The shaded area corresponds to the I/O block; the unshaded area corresponds to the interrupt block.

Figure 11-4. GIO Block Diagram

A. A single low-level-interrupt-handling block and a single high-level-interrupt-handling block service all of the interrupt-capable external pins, but only one pin can be serviced by an interrupt block at a time.

Figure 11-5.

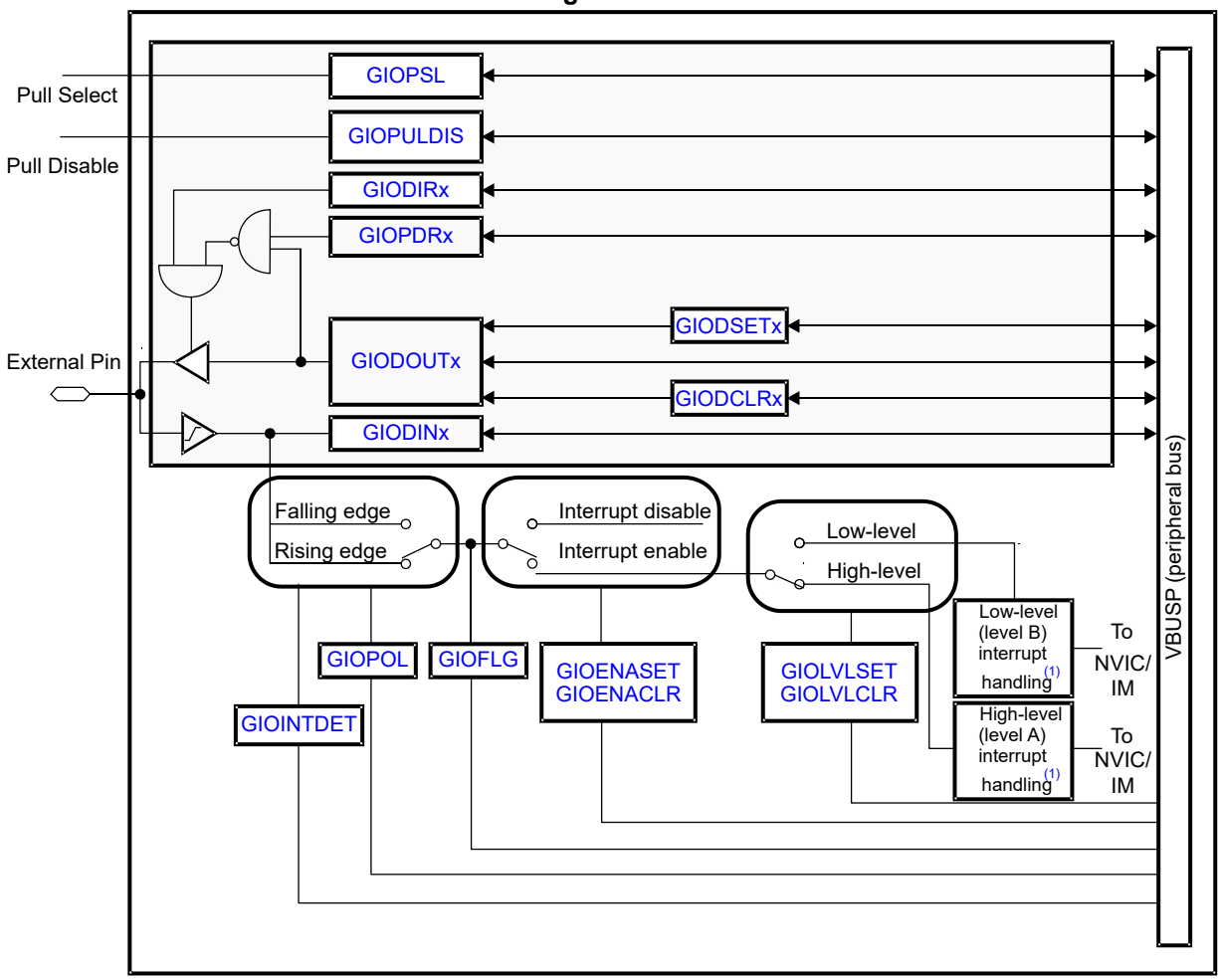

Copyright © 2025 Texas Instruments Incorporated

11.1.1.4 Device Modes of Operation

The GIO module behaves differently in different modes of operation. There are two main modes:

- Emulation mode
- Power-down mode (low-power mode)

11.1.1.4.1 Emulation Mode

Emulation mode is used by debugger tools to stop the CPU at breakpoints to read registers.

Note

Emulation Mode and Emulation Registers

Emulation mode is a mode of operation of the device and is separate from the GIO emulation registers (GIOEMU1 and GIOEMU2). The contents of these emulation registers are identical to the contents of GIO offset registers (GIOOFF1 and GIOOFF2). Both emulation registers and GIO offset registers are NOT cleared when they are read in emulation mode. GIO offset registers are cleared when they are read in normal mode (other than emulation mode). The emulation registers are NOT cleared when they are read in normal mode. The intention for the emulation registers is that software can use them without clearing the flags.

During emulation mode:

- External interrupts are not captured because the NVIC/IM is unable to service interrupts.
- Any register can be read without affecting the state of the system.
- A write to a register still does affect the state of the system.

11.1.1.4.2 Power-Down Mode (Low-Power Mode)

In power-down mode, the clock signal to the GIO module is disabled. Thus, there is no switching and the only current draw comes from leakage current. In power-down mode, interrupt pins become level-sensitive rather than edge-sensitive. The polarity bit changes function from falling-edge-triggered to low-level-triggered and rising-edge-triggered to high-level-triggered. A corresponding level on an interrupt pin pulls the module out of low-power mode, if the interrupt is also enabled to wake up the device out of a low-power mode.

11.1.1.4.3 Interrupts

GIO generates aggregated interrupts for all inputs from PAD. Some of the interrupts to MSS_R5F are directly taken from GPIO-PAD.

MSS_GIO_INT0/1

MSS_GIO_PAD_INT0 from GPIO[0]

MSS_GIO_PAD_INT1 from GPIO[1]

MSS_GIO_PAD_INT2 from GPIO[2]

MSS_CTRL:: MSS_GIO_CFG_GIO:: MSS_GIO_CFG_GIO_CONFIG is used for selecting the edge that can give a trigger.

Copyright © 2025 Texas Instruments Incorporated

11.1.1.5 TOP_GIO Registers

Table 11-1 lists the memory-mapped registers for the TOP_GIO registers. All register offset addresses not listed in Table 11-1 should be considered as reserved locations and the register contents should not be modified.

Table 11-1. TOP_GIO Registers

Offset	Acronym	Register Name	Section
0h	GIOGCR	GIOGCR	Go
4h	GIOPWDN	GIOPWDN	Go
8h	GIOINTDET	GIOINTDET	Go
Ch	GIOPOL	GIOPOL	Go
10h	GIOENASET	GIOENASET	Go
14h	GIOENACLR	GIOENACLR	Go
18h	GIOLVLSET	GIOLVLSET	Go
1Ch	GIOLVLCLR	GIOLVLCLR	Go
20h	GIOFLG	GIOFLG	Go
24h	GIOOFFA	GIOOFFA	Go
28h	GIOOFFB	GIOOFFB	Go
2Ch	GIOEMUA	GIOEMUA	Go
30h	GIOEMUB	GIOEMUB	Go
34h	GIODIRA	GIODIRA	Go
38h	GIODINA	GIODINA	Go
3Ch	GIODOUTA	GIODOUTA	Go
40h	GIOSETA	GIOSETA	Go
44h	GIOCLRA	GIOCLRA	Go
48h	GIOPDRA	GIOPDRA	Go
4Ch	GIOPULDISA	GIOPULDISA	Go
50h	GIOPSLA	GIOPSLA	Go
54h	GIODIRB	GIODIRB	Go
58h	GIODINB	GIODINB	Go
5Ch	GIODOUTB	GIODOUTB	Go
60h	GIOSETB	GIOSETB	Go
64h	GIOCLRB	GIOCLRB	Go
68h	GIOPDRB	GIOPDRB	Go
6Ch	GIOPULDISB	GIOPULDISB	Go
70h	GIOPSLB	GIOPSLB	Go
74h	GIODIRC	GIODIRC	Go
78h	GIODINC	GIODINC	Go
7Ch	GIODOUTC	GIODOUTC	Go
80h	GIOSETC	GIOSETC	Go
84h	GIOCLRC	GIOCLRC	Go
88h	GIOPDRC	GIOPDRC	Go
8Ch	GIOPULDISC	GIOPULDISC	Go
90h	GIOPSLC	GIOPSLC	Go
94h	GIODIRD	GIODIRD	Go
98h	GIODIND	GIODIND	Go
9Ch	GIODOUTD	GIODOUTD	Go
A0h	GIOSETD	GIOSETD	Go

Copyright © 2025 Texas Instruments Incorporated

Table 11-1. TOP_GIO Registers (continued)

Offset	Acronym	Register Name	Section
A4h	GIOCLRD	GIOCLRD	Go
A8h	GIOPDRD	GIOPDRD	Go
ACh	GIOPULDISD	GIOPULDISD	Go
B0h	GIOPSLD	GIOPSLD	Go
B4h	GIODIRE	GIODIRE	Go
B8h	GIODINE	GIODINE	Go
BCh	GIODOUTE	GIODOUTE	Go
C0h	GIOSETE	GIOSETE	Go
C4h	GIOCLRE	GIOCLRE	Go
C8h	GIOPDRE	GIOPDRE	Go
CCh	GIOPULDISE	GIOPULDISE	Go
D0h	GIOPSLE	GIOPSLE	Go
D4h	GIODIRF	GIODIRF	Go
D8h	GIODINF	GIODINF	Go
DCh	GIODOUTF	GIODOUTF	Go
E0h	GIOSETF	GIOSETF	Go
E4h	GIOCLRF	GIOCLRF	Go
E8h	GIOPDRF	GIOPDRF	Go
ECh	GIOPULDISF	GIOPULDISF	Go
F0h	GIOPSLF	GIOPSLF	Go
F4h	GIODIRG	GIODIRG	Go
F8h	GIODING	GIODING	Go
FCh	GIODOUTG	GIODOUTG	Go
100h	GIOSETG	GIOSETG	Go
104h	GIOCLRG	GIOCLRG	Go
108h	GIOPDRG	GIOPDRG	Go
10Ch	GIOPULDISG	GIOPULDISG	Go
110h	GIOPSLG	GIOPSLG	Go
114h	GIODIRH	GIODIRH	Go
118h	GIODINH	GIODINH	Go
11Ch	GIODOUTH	GIODOUTH	Go
120h	GIOSETH	GIOSETH	Go
124h	GIOCLRH	GIOCLRH	Go
128h	GIOPDRH	GIOPDRH	Go
12Ch	GIOPULDISH	GIOPULDISH	Go
130h	GIOPSLH	GIOPSLH	Go
134h	GIOSRCA	GIOSRCA	Go
138h	GIOSRCB	GIOSRCB	Go
13Ch	GIOSRCC	GIOSRCC	Go
140h	GIOSRCD	GIOSRCD	Go
144h	GIOSRCE	GIOSRCE	Go
148h	GIOSRCF	GIOSRCF	Go
14Ch	GIOSRCG	GIOSRCG	Go
150h	GIOSRCH	GIOSRCH	Go

Copyright © 2025 Texas Instruments Incorporated

Complex bit access types are encoded to fit into small table cells. Table 11-2 shows the codes that are used for access types in this section.

Table 11-2. TOP_GIO Access Type Codes

Access Type	Code	Description
Read Type		
R	R	Read
Write Type		
W	W	Write
Reset or Default Value		
-n		Value after reset or the default value

Copyright © 2025 Texas Instruments Incorporated

11.1.1.5.1 GIOGCR Register (Offset = 0h) [Reset = 00000000h]

GIOGCR is shown in Table 11-3.

Return to the Summary Table.

GIO reset

Table 11-3. GIOGCR Register Field Descriptions

Bit	Field	Type	Reset	Description
31-1	NU0	R/W	0h	Reserved
0	RESET	R/W	0h	GIO reset

Copyright © 2025 Texas Instruments Incorporated

11.1.1.5.2 GIOPWDN Register (Offset = 4h) [Reset = 00000000h]

GIOPWDN is shown in Table 11-4.

Return to the Summary Table.

GIO power down mode register

Table 11-4. GIOPWDN Register Field Descriptions

Bit	Field	Type	Reset	Description
31-1	NU	R/W	0h	Reserved
0	GIOPWDN	R/W	0h	Writing to the GIOPWDN bit is only allowed in privilege mode. Reading of the GIOPWDN bit is allowed in all modes. Privilege mode (write): 0 = Normal operation clocks enabled to GIO module 1 = Power-down mode User mode (write): Writes have no effect in user mode. User or privilege mode (read): 0 = Normal operation clocks enabled to GIO module 1 = Power-down mode

Copyright © 2025 Texas Instruments Incorporated

11.1.1.5.3 GIOINTDET Register (Offset = 8h) [Reset = 00000000h]

GIOINTDET is shown in Table 11-5.

Return to the Summary Table.

Interrupt detection select for pins [0:1] GIO[7:0].

Table 11-5. GIOINTDET Register Field Descriptions

Bit	Field	Type	Reset	Description
31-24	GIOINTDET_3	R/W	0h	Interrupt detection select for pins GIOD [7:0].
23-16	GIOINTDET_2	R/W	0h	Interrupt detection select for pins GIOC [7:0].
15-8	GIOINTDET_1	R/W	0h	Interrupt detection select for pins GIOB [7:0].
7-0	GIOINTDET_0	R/W	0h	Interrupt detection select for pins GIOA [7:0].

Copyright © 2025 Texas Instruments Incorporated

11.1.1.5.4 GIOPOL Register (Offset = Ch) [Reset = 00000000h]

GIOPOL is shown in Table 11-6.

Return to the Summary Table.

Interrupt polarity select for pins [0:1] GIO[7:0].

Table 11-6. GIOPOL Register Field Descriptions

Bit	Field	Type	Reset	Description
31-24	GIOPOL_3	R/W	0h	Interrupt polarity select for pins GIOD [7:0]
23-16	GIOPOL_2	R/W	0h	Interrupt polarity select for pins GIOC [7:0]
15-8	GIOPOL_1	R/W	0h	Interrupt polarity select for pins GIOB [7:0]
7-0	GIOPOL_0	R/W	0h	Interrupt polarity select for pins GIOA [7:0]

Copyright © 2025 Texas Instruments Incorporated

11.1.1.5.5 GIOENASET Register (Offset = 10h) [Reset = 00000000h]

GIOENASET is shown in Table 11-7.

Return to the Summary Table.

Interrupt enable for pins [0:1] GIO[7:0].

Table 11-7. GIOENASET Register Field Descriptions

Bit	Field	Type	Reset	Description
31-24	GIOENASET_3	R/W	0h	Interrupt enable for pins GIOD [7:0]
23-16	GIOENASET_2	R/W	0h	Interrupt enable for pins GIOC [7:0]
15-8	GIOENASET_1	R/W	0h	Interrupt enable for pins GIOB [7:0]
7-0	GIOENASET_0	R/W	0h	Interrupt enable for pins GIOA [7:0]

Copyright © 2025 Texas Instruments Incorporated

11.1.1.5.6 GIOENACLR Register (Offset = 14h) [Reset = 00000000h]

GIOENACLR is shown in Table 11-8.

Return to the Summary Table.

Interrupt enable for pins [0:1] GIO[7:0].

Table 11-8. GIOENACLR Register Field Descriptions

Bit	Field	Type	Reset	Description
31-24	GIOENACLR_3	R/W	0h	Interrupt enable for pins GIOD [7:0]
23-16	GIOENACLR_2	R/W	0h	Interrupt enable for pins GIOC [7:0]
15-8	GIOENACLR_1	R/W	0h	Interrupt enable for pins GIOB [7:0]
7-0	GIOENACLR_0	R/W	0h	Interrupt enable for pins GIOA [7:0]

Copyright © 2025 Texas Instruments Incorporated

11.1.1.5.7 GIOLVLSET Register (Offset = 18h) [Reset = 00000000h]

GIOLVLSET is shown in Table 11-9.

Return to the Summary Table.

GIO high priority interrupt for pins [0:1] GIO[7:0].

Table 11-9. GIOLVLSET Register Field Descriptions

Bit	Field	Type	Reset	Description
31-24	GIOLVLSET_3	R/W	0h	GIO high priority interrupt for pins GIOD [7:0]
23-16	GIOLVLSET_2	R/W	0h	GIO high priority interrupt for pins GIOC [7:0]
15-8	GIOLVLSET_1	R/W	0h	GIO high priority interrupt for pins GIOB [7:0]
7-0	GIOLVLSET_0	R/W	0h	GIO high priority interrupt for pins GIOA [7:0]

Copyright © 2025 Texas Instruments Incorporated

11.1.1.5.8 GIOLVLCLR Register (Offset = 1Ch) [Reset = 00000000h]

GIOLVLCLR is shown in Table 11-10.

Return to the Summary Table.

GIO low priority interrupt for pins [0:1] GIO[7:0].

Table 11-10. GIOLVLCLR Register Field Descriptions

Bit	Field	Type	Reset	Description
31-24	GIOLVLCLR_3	R/W	0h	GIO low priority interrupt for pins GIOD [7:0]
23-16	GIOLVLCLR_2	R/W	0h	GIO low priority interrupt for pins GIOC [7:0]
15-8	GIOLVLCLR_1	R/W	0h	GIO low priority interrupt for pins GIOB [7:0]
7-0	GIOLVLCLR_0	R/W	0h	GIO low priority interrupt for pins GIOA [7:0]

Copyright © 2025 Texas Instruments Incorporated

11.1.1.5.9 GIOFLG Register (Offset = 20h) [Reset = 00000000h]

GIOFLG is shown in Table 11-11.

Return to the Summary Table.

GIO flag for pins [0:1] GIO[7:0].

Table 11-11. GIOFLG Register Field Descriptions

Bit	Field	Type	Reset	Description
31-24	GIOFLG_3	R/W	0h	GIO flag for pins GIOD [7:0]
23-16	GIOFLG_2	R/W	0h	GIO flag for pins GIOC [7:0]
15-8	GIOFLG_1	R/W	0h	GIO flag for pins GIOB [7:0]
7-0	GIOFLG_0	R/W	0h	GIO flag for pins GIOA [7:0]

Copyright © 2025 Texas Instruments Incorporated

11.1.1.5.10 GIOOFFA Register (Offset = 24h) [Reset = 00000000h]

GIOOFFA is shown in Table 11-12.

Return to the Summary Table.

Index bits for currently pending high-priority interrupt Register A

Table 11-12. GIOOFFA Register Field Descriptions

Bit	Field	Type	Reset	Description
31-6	NU1	R/W	0h	Reserved
5-0	GIOOFFA	R/W	0h	Index bits for currently pending high-priority interrupt Register A

Copyright © 2025 Texas Instruments Incorporated

11.1.1.5.11 GIOOFFB Register (Offset = 28h) [Reset = 00000000h]

GIOOFFB is shown in Table 11-13.

Return to the Summary Table.

Index bits for currently pending high-priority interrupt Register B

Table 11-13. GIOOFFB Register Field Descriptions

Bit	Field	Type	Reset	Description
31-6	NU2	R/W	0h	Reserved
5-0	GIOOFFB	R/W	0h	Index bits for currently pending high-priority interrupt Register B

Copyright © 2025 Texas Instruments Incorporated

11.1.1.5.12 GIOEMUA Register (Offset = 2Ch) [Reset = 00000000h]

GIOEMUA is shown in Table 11-14.

Return to the Summary Table.

GIO emulation register A

Table 11-14. GIOEMUA Register Field Descriptions

Bit	Field	Type	Reset	Description
31-6	NU3	R/W	0h	Reserved
5-0	GIOEMUA	R/W	0h	GIO emulation register A

Copyright © 2025 Texas Instruments Incorporated

11.1.1.5.13 GIOEMUB Register (Offset = 30h) [Reset = 00000000h]

GIOEMUB is shown in Table 11-15.

Return to the Summary Table.

GIO emulation register B

Table 11-15. GIOEMUB Register Field Descriptions

Bit	Field	Type	Reset	Description
31-6	NU4	R/W	0h	Reserved
5-0	GIOEMUB	R/W	0h	GIO emulation register B

Copyright © 2025 Texas Instruments Incorporated

11.1.1.5.14 GIODIRA Register (Offset = 34h) [Reset = 00000000h]

GIODIRA is shown in Table 11-16.

Return to the Summary Table.

GIO data direction of pins in Port A

Table 11-16. GIODIRA Register Field Descriptions

Bit	Field	Type	Reset	Description
31-8	NU5	R/W	0h	Reserved
7-0	GIODIRA	R/W	0h	GIO data direction of pins in Port A

Copyright © 2025 Texas Instruments Incorporated

11.1.1.5.15 GIODINA Register (Offset = 38h) [Reset = 00000000h]

GIODINA is shown in Table 11-17.

Return to the Summary Table.

GIO data input for pins in port A

Table 11-17. GIODINA Register Field Descriptions

Bit	Field	Type	Reset	Description
31-8	NU11	R/W	0h	Reserved
7-0	GIODINA	R/W	0h	GIO data input for pins in port A

Copyright © 2025 Texas Instruments Incorporated

11.1.1.5.16 GIODOUTA Register (Offset = 3Ch) [Reset = 00000000h]

GIODOUTA is shown in Table 11-18.

Return to the Summary Table.

GIO data output for pins in port A

Table 11-18. GIODOUTA Register Field Descriptions

Bit	Field	Type	Reset	Description
31-8	NU17	R/W	0h	Reserved
7-0	GIODOUTA	R/W	0h	GIO data output for pins in port A

Copyright © 2025 Texas Instruments Incorporated

11.1.1.5.17 GIOSETA Register (Offset = 40h) [Reset = 00000000h]

GIOSETA is shown in Table 11-19.

Return to the Summary Table.

GIO data set for port A

Table 11-19. GIOSETA Register Field Descriptions

Bit	Field	Type	Reset	Description
31-8	NU23	R/W	0h	Reserved
7-0	GIODSETA	R/W	0h	GIO data set for port A

Copyright © 2025 Texas Instruments Incorporated

11.1.1.5.18 GIOCLRA Register (Offset = 44h) [Reset = 00000000h]

GIOCLRA is shown in Table 11-20.

Return to the Summary Table.

GIO data clear for port A

Table 11-20. GIOCLRA Register Field Descriptions

Bit	Field	Type	Reset	Description
31-8	NU29	R/W	0h	Reserved
7-0	GIODCLRA	R/W	0h	GIO data clear for port A

Copyright © 2025 Texas Instruments Incorporated

11.1.1.5.19 GIOPDRA Register (Offset = 48h) [Reset = 00000000h]

GIOPDRA is shown in Table 11-21.

Return to the Summary Table.

GIO open drain for port A

Table 11-21. GIOPDRA Register Field Descriptions

Bit	Field	Type	Reset	Description
31-8	NU35	R/W	0h	Reserved
7-0	GIOPDRA	R/W	0h	GIO open drain for port A

Copyright © 2025 Texas Instruments Incorporated

11.1.1.5.20 GIOPULDISA Register (Offset = 4Ch) [Reset = 00000000h]

GIOPULDISA is shown in Table 11-22.

Return to the Summary Table.

GIO pul disable for port A

Table 11-22. GIOPULDISA Register Field Descriptions

Bit	Field	Type	Reset	Description
31-8	NU	R/W	0h	Reserved
7-0	GIOPULDISA	R/W	0h	GIO pull disable for port A

Copyright © 2025 Texas Instruments Incorporated

11.1.1.5.21 GIOPSLA Register (Offset = 50h) [Reset = 00000000h]

GIOPSLA is shown in Table 11-23.

Return to the Summary Table.

GIO pul select for port A

Table 11-23. GIOPSLA Register Field Descriptions

Bit	Field	Type	Reset	Description
31-8	NU35	R/W	0h	Reserved
7-0	GIOPSLA	R/W	0h	GIO pull select for port A

Copyright © 2025 Texas Instruments Incorporated

11.1.1.5.22 GIODIRB Register (Offset = 54h) [Reset = 00000000h]

GIODIRB is shown in Table 11-24.

Return to the Summary Table.

GIO data direction of pins in Port B

Table 11-24. GIODIRB Register Field Descriptions

Bit	Field	Type	Reset	Description
31-8	NU6	R/W	0h	Reserved
7-0	GIODIRB	R/W	0h	GIO data direction of pins in Port B

Copyright © 2025 Texas Instruments Incorporated

11.1.1.5.23 GIODINB Register (Offset = 58h) [Reset = 00000000h]

GIODINB is shown in Table 11-25.

Return to the Summary Table.

GIO data input for pins in port B

Table 11-25. GIODINB Register Field Descriptions

Bit	Field	Type	Reset	Description
31-8	NU12	R/W	0h	Reserved
7-0	GIODINB	R/W	0h	GIO data input for pins in port B

Copyright © 2025 Texas Instruments Incorporated

11.1.1.5.24 GIODOUTB Register (Offset = 5Ch) [Reset = 00000000h]

GIODOUTB is shown in Table 11-26.

Return to the Summary Table.

GIO data output for pins in port B

Table 11-26. GIODOUTB Register Field Descriptions

Bit	Field	Type	Reset	Description
31-8	NU18	R/W	0h	Reserved
7-0	GIODOUTB	R/W	0h	GIO data output for pins in port B

Copyright © 2025 Texas Instruments Incorporated

11.1.1.5.25 GIOSETB Register (Offset = 60h) [Reset = 00000000h]

GIOSETB is shown in Table 11-27.

Return to the Summary Table.

GIO data set for port B

Table 11-27. GIOSETB Register Field Descriptions

Bit	Field	Type	Reset	Description
31-8	NU24	R/W	0h	Reserved
7-0	GIODSETB	R/W	0h	GIO data set for port B

Copyright © 2025 Texas Instruments Incorporated

11.1.1.5.26 GIOCLRB Register (Offset = 64h) [Reset = 00000000h]

GIOCLRB is shown in Table 11-28.

Return to the Summary Table.

GIO data clear for port B

Table 11-28. GIOCLRB Register Field Descriptions

Bit	Field	Type	Reset	Description
31-8	NU30	R/W	0h	Reserved
7-0	GIODCLRB	R/W	0h	GIO data clear for port B

Copyright © 2025 Texas Instruments Incorporated

11.1.1.5.27 GIOPDRB Register (Offset = 68h) [Reset = 00000000h]

GIOPDRB is shown in Table 11-29.

Return to the Summary Table.

GIO open drain for port B

Table 11-29. GIOPDRB Register Field Descriptions

Bit	Field	Type	Reset	Description
31-8	NU36	R/W	0h	Reserved
7-0	GIOPDRB	R/W	0h	GIO open drain for port B

Copyright © 2025 Texas Instruments Incorporated

11.1.1.5.28 GIOPULDISB Register (Offset = 6Ch) [Reset = 00000000h]

GIOPULDISB is shown in Table 11-30.

Return to the Summary Table.

GIO pul disable for port B

Table 11-30. GIOPULDISB Register Field Descriptions

Bit	Field	Type	Reset	Description
31-8	NU36	R/W	0h	Reserved
7-0	GIOPULDISB	R/W	0h	GIO pull disable for port B

Copyright © 2025 Texas Instruments Incorporated

11.1.1.5.29 GIOPSLB Register (Offset = 70h) [Reset = 00000000h]

GIOPSLB is shown in Table 11-31.

Return to the Summary Table.

GIO pul select for port B

Table 11-31. GIOPSLB Register Field Descriptions

Bit	Field	Type	Reset	Description
31-8	NU36	R/W	0h	Reserved
7-0	GIOPSLB	R/W	0h	GIO pull select for port B

Copyright © 2025 Texas Instruments Incorporated

11.1.1.5.30 GIODIRC Register (Offset = 74h) [Reset = 00000000h]

GIODIRC is shown in Table 11-32.

Return to the Summary Table.

GIO data direction of pins in Port C

Table 11-32. GIODIRC Register Field Descriptions

Bit	Field	Type	Reset	Description
31-8	NU7	R/W	0h	Reserved
7-0	GIODIRC	R/W	0h	GIO data direction of pins in Port C

Copyright © 2025 Texas Instruments Incorporated

11.1.1.5.31 GIODINC Register (Offset = 78h) [Reset = 00000000h]

GIODINC is shown in Table 11-33.

Return to the Summary Table.

GIO data input for pins in port C

Table 11-33. GIODINC Register Field Descriptions

Bit	Field	Type	Reset	Description
31-8	NU13	R/W	0h	Reserved
7-0	GIODINC	R/W	0h	GIO data input for pins in port C

Copyright © 2025 Texas Instruments Incorporated

11.1.1.5.32 GIODOUTC Register (Offset = 7Ch) [Reset = 00000000h]

GIODOUTC is shown in Table 11-34.

Return to the Summary Table.

GIO data output for pins in port C

Table 11-34. GIODOUTC Register Field Descriptions

Bit	Field	Type	Reset	Description
31-8	NU19	R/W	0h	Reserved
7-0	GIODOUTC	R/W	0h	GIO data output for pins in port C

Copyright © 2025 Texas Instruments Incorporated

11.1.1.5.33 GIOSETC Register (Offset = 80h) [Reset = 00000000h]

GIOSETC is shown in Table 11-35.

Return to the Summary Table.

GIO data set for port C

Table 11-35. GIOSETC Register Field Descriptions

Bit	Field	Type	Reset	Description
31-8	NU25	R/W	0h	Reserved
7-0	GIODSETC	R/W	0h	GIO data set for port C

Copyright © 2025 Texas Instruments Incorporated

11.1.1.5.34 GIOCLRC Register (Offset = 84h) [Reset = 00000000h]

GIOCLRC is shown in Table 11-36.

Return to the Summary Table.

GIO data clear for port C

Table 11-36. GIOCLRC Register Field Descriptions

Bit	Field	Type	Reset	Description
31-8	NU31	R/W	0h	Reserved
7-0	GIODCLRC	R/W	0h	GIO data clear for port C

Copyright © 2025 Texas Instruments Incorporated

11.1.1.5.35 GIOPDRC Register (Offset = 88h) [Reset = 00000000h]

GIOPDRC is shown in Table 11-37.

Return to the Summary Table.

GIO open drain for port C

Table 11-37. GIOPDRC Register Field Descriptions

Bit	Field	Type	Reset	Description
31-8	NU37	R/W	0h	Reserved
7-0	GIOPDRC	R/W	0h	GIO open drain for port C

Copyright © 2025 Texas Instruments Incorporated

11.1.1.5.36 GIOPULDISC Register (Offset = 8Ch) [Reset = 00000000h]

GIOPULDISC is shown in Table 11-38.

Return to the Summary Table.

GIO pul disable for port C

Table 11-38. GIOPULDISC Register Field Descriptions

Bit	Field	Type	Reset	Description
31-8	NU37	R/W	0h	Reserved
7-0	GIOPULDISC	R/W	0h	GIO pull disable for port C

Copyright © 2025 Texas Instruments Incorporated

11.1.1.5.37 GIOPSLC Register (Offset = 90h) [Reset = 00000000h]

GIOPSLC is shown in Table 11-39.

Return to the Summary Table.

GIO pul select for port C

Table 11-39. GIOPSLC Register Field Descriptions

Bit	Field	Type	Reset	Description
31-8	NU37	R/W	0h	Reserved
7-0	GIOPSLC	R/W	0h	GIO pull select for port C

Copyright © 2025 Texas Instruments Incorporated

11.1.1.5.38 GIODIRD Register (Offset = 94h) [Reset = 00000000h]

GIODIRD is shown in Table 11-40.

Return to the Summary Table.

GIO data direction of pins in Port D

Table 11-40. GIODIRD Register Field Descriptions

Bit	Field	Type	Reset	Description
31-8	NU8	R/W	0h	Reserved
7-0	GIODIRD	R/W	0h	GIO data direction of pins in Port D

Copyright © 2025 Texas Instruments Incorporated

11.1.1.5.39 GIODIND Register (Offset = 98h) [Reset = 00000000h]

GIODIND is shown in Table 11-41.

Return to the Summary Table.

GIO data input for pins in port D

Table 11-41. GIODIND Register Field Descriptions

Bit	Field	Type	Reset	Description
31-8	NU14	R/W	0h	Reserved
7-0	GIODIND	R/W	0h	GIO data input for pins in port D

Copyright © 2025 Texas Instruments Incorporated

11.1.1.5.40 GIODOUTD Register (Offset = 9Ch) [Reset = 00000000h]

GIODOUTD is shown in Table 11-42.

Return to the Summary Table.

GIO data output for pins in port D

Table 11-42. GIODOUTD Register Field Descriptions

Bit	Field	Type	Reset	Description
31-8	NU20	R/W	0h	Reserved
7-0	GIODOUTD	R/W	0h	GIO data output for pins in port D

Copyright © 2025 Texas Instruments Incorporated

11.1.1.5.41 GIOSETD Register (Offset = A0h) [Reset = 00000000h]

GIOSETD is shown in Table 11-43.

Return to the Summary Table.

GIO data set for port D

Table 11-43. GIOSETD Register Field Descriptions

Bit	Field	Type	Reset	Description
31-8	NU26	R/W	0h	Reserved
7-0	GIODSETD	R/W	0h	GIO data set for port D

Copyright © 2025 Texas Instruments Incorporated

11.1.1.5.42 GIOCLRD Register (Offset = A4h) [Reset = 00000000h]

GIOCLRD is shown in Table 11-44.

Return to the Summary Table.

GIO data clear for port D

Table 11-44. GIOCLRD Register Field Descriptions

Bit	Field	Type	Reset	Description
31-8	NU32	R/W	0h	Reserved
7-0	GIODCLRD	R/W	0h	GIO data clear for port D

Copyright © 2025 Texas Instruments Incorporated

11.1.1.5.43 GIOPDRD Register (Offset = A8h) [Reset = 00000000h]

GIOPDRD is shown in Table 11-45.

Return to the Summary Table.

GIO open drain for port D

Table 11-45. GIOPDRD Register Field Descriptions

Bit	Field	Type	Reset	Description
31-8	NU38	R/W	0h	Reserved
7-0	GIOPDRD	R/W	0h	GIO open drain for port D

Copyright © 2025 Texas Instruments Incorporated

11.1.1.5.44 GIOPULDISD Register (Offset = ACh) [Reset = 00000000h]

GIOPULDISD is shown in Table 11-46.

Return to the Summary Table.

GIO pul disable for port D

Table 11-46. GIOPULDISD Register Field Descriptions

Bit	Field	Type	Reset	Description
31-8	NU38	R/W	0h	Reserved
7-0	GIOPULDISD	R/W	0h	GIO pull disable for port D

Copyright © 2025 Texas Instruments Incorporated

11.1.1.5.45 GIOPSLD Register (Offset = B0h) [Reset = 00000000h]

GIOPSLD is shown in Table 11-47.

Return to the Summary Table.

GIO pul select for port D

Table 11-47. GIOPSLD Register Field Descriptions

Bit	Field	Type	Reset	Description
31-8	NU38	R/W	0h	Reserved
7-0	GIOPSLD	R/W	0h	GIO pull select for port D

Copyright © 2025 Texas Instruments Incorporated

11.1.1.5.46 GIODIRE Register (Offset = B4h) [Reset = 00000000h]

GIODIRE is shown in Table 11-48.

Return to the Summary Table.

GIO data direction of pins in Port E

Table 11-48. GIODIRE Register Field Descriptions

Bit	Field	Type	Reset	Description
31-8	NU9	R/W	0h	Reserved
7-0	GIODIRE	R/W	0h	GIO data direction of pins in Port E

Copyright © 2025 Texas Instruments Incorporated

11.1.1.5.47 GIODINE Register (Offset = B8h) [Reset = 00000000h]

GIODINE is shown in Table 11-49.

Return to the Summary Table.

GIO data input for pins in port E

Table 11-49. GIODINE Register Field Descriptions

Bit	Field	Type	Reset	Description
31-8	NU15	R/W	0h	Reserved
7-0	GIODINE	R/W	0h	GIO data input for pins in port E

Copyright © 2025 Texas Instruments Incorporated

11.1.1.5.48 GIODOUTE Register (Offset = BCh) [Reset = 00000000h]

GIODOUTE is shown in Table 11-50.

Return to the Summary Table.

GIO data output for pins in port E

Table 11-50. GIODOUTE Register Field Descriptions

Bit	Field	Type	Reset	Description
31-8	NU21	R/W	0h	Reserved
7-0	GIODOUTE	R/W	0h	GIO data output for pins in port E

Copyright © 2025 Texas Instruments Incorporated

11.1.1.5.49 GIOSETE Register (Offset = C0h) [Reset = 00000000h]

GIOSETE is shown in Table 11-51.

Return to the Summary Table.

GIO data set for port E

Table 11-51. GIOSETE Register Field Descriptions

Bit	Field	Type	Reset	Description
31-8	NU27	R/W	0h	Reserved
7-0	GIODSETE	R/W	0h	GIO data set for port E

Copyright © 2025 Texas Instruments Incorporated

11.1.1.5.50 GIOCLRE Register (Offset = C4h) [Reset = 00000000h]

GIOCLRE is shown in Table 11-52.

Return to the Summary Table.

GIO data clear for port E

Table 11-52. GIOCLRE Register Field Descriptions

Bit	Field	Type	Reset	Description
31-8	NU33	R/W	0h	Reserved
7-0	GIODCLRE	R/W	0h	GIO data clear for port E

Copyright © 2025 Texas Instruments Incorporated

11.1.1.5.51 GIOPDRE Register (Offset = C8h) [Reset = 00000000h]

GIOPDRE is shown in Table 11-53.

Return to the Summary Table.

GIO open drain for port E

Table 11-53. GIOPDRE Register Field Descriptions

Bit	Field	Type	Reset	Description
31-8	NU39	R/W	0h	Reserved
7-0	GIOPDRE	R/W	0h	GIO open drain for port E

Copyright © 2025 Texas Instruments Incorporated

11.1.1.5.52 GIOPULDISE Register (Offset = CCh) [Reset = 00000000h]

GIOPULDISE is shown in Table 11-54.

Return to the Summary Table.

GIO pul disable for port E

Table 11-54. GIOPULDISE Register Field Descriptions

Bit	Field	Type	Reset	Description
31-8	NU39	R/W	0h	Reserved
7-0	GIOPULDISE	R/W	0h	GIO pull disable for port E

Copyright © 2025 Texas Instruments Incorporated

11.1.1.5.53 GIOPSLE Register (Offset = D0h) [Reset = 00000000h]

GIOPSLE is shown in Table 11-55.

Return to the Summary Table.

GIO pul select for port E

Table 11-55. GIOPSLE Register Field Descriptions

Bit	Field	Type	Reset	Description
31-8	NU39	R/W	0h	Reserved
7-0	GIOPSLE	R/W	0h	GIO pull select for port E

Copyright © 2025 Texas Instruments Incorporated

11.1.1.5.54 GIODIRF Register (Offset = D4h) [Reset = 00000000h]

GIODIRF is shown in Table 11-56.

Return to the Summary Table.

GIO data direction of pins in Port F

Table 11-56. GIODIRF Register Field Descriptions

Bit	Field	Type	Reset	Description
31-8	NU10	R/W	0h	Reserved
7-0	GIODIRF	R/W	0h	GIO data direction of pins in Port F

Copyright © 2025 Texas Instruments Incorporated

11.1.1.5.55 GIODINF Register (Offset = D8h) [Reset = 00000000h]

GIODINF is shown in Table 11-57.

Return to the Summary Table.

GIO data input for pins in Port F

Table 11-57. GIODINF Register Field Descriptions

Bit	Field	Type	Reset	Description
31-8	NU16	R/W	0h	Reserved
7-0	GIODINF	R/W	0h	GIO data input for pins in port F

Copyright © 2025 Texas Instruments Incorporated

11.1.1.5.56 GIODOUTF Register (Offset = DCh) [Reset = 00000000h]

GIODOUTF is shown in Table 11-58.

Return to the Summary Table.

GIO data output for pins in Port F

Table 11-58. GIODOUTF Register Field Descriptions

Bit	Field	Type	Reset	Description
31-8	NU22	R/W	0h	Reserved
7-0	GIODOUTF	R/W	0h	GIO data output for pins in port F

Copyright © 2025 Texas Instruments Incorporated

11.1.1.5.57 GIOSETF Register (Offset = E0h) [Reset = 00000000h]

GIOSETF is shown in Table 11-59.

Return to the Summary Table.

GIO data set for Port F

Table 11-59. GIOSETF Register Field Descriptions

Bit	Field	Type	Reset	Description
31-8	NU28	R/W	0h	Reserved
7-0	GIODSETF	R/W	0h	GIO data set for port F

Copyright © 2025 Texas Instruments Incorporated

11.1.1.5.58 GIOCLRF Register (Offset = E4h) [Reset = 00000000h]

GIOCLRF is shown in Table 11-60.

Return to the Summary Table.

GIO data clear for Port F

Table 11-60. GIOCLRF Register Field Descriptions

Bit	Field	Type	Reset	Description
31-8	NU34	R/W	0h	Reserved
7-0	GIODCLRF	R/W	0h	GIO data clear for port F

Copyright © 2025 Texas Instruments Incorporated

11.1.1.5.59 GIOPDRF Register (Offset = E8h) [Reset = 00000000h]

GIOPDRF is shown in Table 11-61.

Return to the Summary Table.

GIO open drain for Port F

Table 11-61. GIOPDRF Register Field Descriptions

Bit	Field	Type	Reset	Description
31-8	NU40	R/W	0h	Reserved
7-0	GIOPDRF	R/W	0h	GIO open drain for port F

Copyright © 2025 Texas Instruments Incorporated

11.1.1.5.60 GIOPULDISF Register (Offset = ECh) [Reset = 00000000h]

GIOPULDISF is shown in Table 11-62.

Return to the Summary Table.

GIO pul disable for port F

Table 11-62. GIOPULDISF Register Field Descriptions

Bit	Field	Type	Reset	Description
31-8	NU40	R/W	0h	Reserved
7-0	GIOPULDISF	R/W	0h	GIO pull disable for port F

Copyright © 2025 Texas Instruments Incorporated

11.1.1.5.61 GIOPSLF Register (Offset = F0h) [Reset = 00000000h]

GIOPSLF is shown in Table 11-63.

Return to the Summary Table.

GIO pul select for port F

Table 11-63. GIOPSLF Register Field Descriptions

Bit	Field	Type	Reset	Description
31-8	NU40	R/W	0h	Reserved
7-0	GIOPSLF	R/W	0h	GIO pull select for port F

Copyright © 2025 Texas Instruments Incorporated

11.1.1.5.62 GIODIRG Register (Offset = F4h) [Reset = 00000000h]

GIODIRG is shown in Table 11-64.

Return to the Summary Table.

GIO data direction of pins in Port G

Table 11-64. GIODIRG Register Field Descriptions

Bit	Field	Type	Reset	Description
31-8	NU9	R/W	0h	Reserved
7-0	GIODIRG	R/W	0h	GIO data direction of pins in Port G

Copyright © 2025 Texas Instruments Incorporated

11.1.1.5.63 GIODING Register (Offset = F8h) [Reset = 00000000h]

GIODING is shown in Table 11-65.

Return to the Summary Table.

GIO data input for pins in port G

Table 11-65. GIODING Register Field Descriptions

Bit	Field	Type	Reset	Description
31-8	NU15	R/W	0h	Reserved
7-0	GIODING	R/W	0h	GIO data input for pins in port G

Copyright © 2025 Texas Instruments Incorporated

11.1.1.5.64 GIODOUTG Register (Offset = FCh) [Reset = 00000000h]

GIODOUTG is shown in Table 11-66.

Return to the Summary Table.

GIO data output for pins in port G

Table 11-66. GIODOUTG Register Field Descriptions

Bit	Field	Type	Reset	Description
31-8	NU21	R/W	0h	Reserved
7-0	GIODOUTG	R/W	0h	GIO data output for pins in port G

Copyright © 2025 Texas Instruments Incorporated

11.1.1.5.65 GIOSETG Register (Offset = 100h) [Reset = 00000000h]

GIOSETG is shown in Table 11-67.

Return to the Summary Table.

GIO data set for port G

Table 11-67. GIOSETG Register Field Descriptions

Bit	Field	Type	Reset	Description
31-8	NU27	R/W	0h	Reserved
7-0	GIODSETG	R/W	0h	GIO data set for port G

Copyright © 2025 Texas Instruments Incorporated

11.1.1.5.66 GIOCLRG Register (Offset = 104h) [Reset = 00000000h]

GIOCLRG is shown in Table 11-68.

Return to the Summary Table.

GIO data clear for port G

Table 11-68. GIOCLRG Register Field Descriptions

Bit	Field	Type	Reset	Description
31-8	NU33	R/W	0h	Reserved
7-0	GIODCLRG	R/W	0h	GIO data clear for port G

Copyright © 2025 Texas Instruments Incorporated

11.1.1.5.67 GIOPDRG Register (Offset = 108h) [Reset = 00000000h]

GIOPDRG is shown in Table 11-69.

Return to the Summary Table.

GIO open drain for port G

Table 11-69. GIOPDRG Register Field Descriptions

Bit	Field	Type	Reset	Description
31-8	NU39	R/W	0h	Reserved
7-0	GIOPDRG	R/W	0h	GIO open drain for port G

Copyright © 2025 Texas Instruments Incorporated

11.1.1.5.68 GIOPULDISG Register (Offset = 10Ch) [Reset = 00000000h]

GIOPULDISG is shown in Table 11-70.

Return to the Summary Table.

GIO pul disable for port G

Table 11-70. GIOPULDISG Register Field Descriptions

Bit	Field	Type	Reset	Description
31-8	NU39	R/W	0h	Reserved
7-0	GIOPULDISG	R/W	0h	GIO pull disable for port G

Copyright © 2025 Texas Instruments Incorporated

11.1.1.5.69 GIOPSLG Register (Offset = 110h) [Reset = 00000000h]

GIOPSLG is shown in Table 11-71.

Return to the Summary Table.

GIO pul select for port G

Table 11-71. GIOPSLG Register Field Descriptions

Bit	Field	Type	Reset	Description
31-8	NU39	R/W	0h	Reserved
7-0	GIOPSLG	R/W	0h	GIO pull select for port G

Copyright © 2025 Texas Instruments Incorporated

11.1.1.5.70 GIODIRH Register (Offset = 114h) [Reset = 00000000h]

GIODIRH is shown in Table 11-72.

Return to the Summary Table.

GIO data direction of pins in Port H

Table 11-72. GIODIRH Register Field Descriptions

Bit	Field	Type	Reset	Description
31-8	NU10	R/W	0h	Reserved
7-0	GIODIRH	R/W	0h	GIO data direction of pins in Port H

Copyright © 2025 Texas Instruments Incorporated

11.1.1.5.71 GIODINH Register (Offset = 118h) [Reset = 00000000h]

GIODINH is shown in Table 11-73.

Return to the Summary Table.

GIO data input for pins in Port H

Table 11-73. GIODINH Register Field Descriptions

Bit	Field	Type	Reset	Description
31-8	NU16	R/W	0h	Reserved
7-0	GIODINH	R/W	0h	GIO data input for pins in port H

Copyright © 2025 Texas Instruments Incorporated

11.1.1.5.72 GIODOUTH Register (Offset = 11Ch) [Reset = 00000000h]

GIODOUTH is shown in Table 11-74.

Return to the Summary Table.

GIO data output for pins in Port H

Table 11-74. GIODOUTH Register Field Descriptions

Bit	Field	Type	Reset	Description
31-8	NU22	R/W	0h	Reserved
7-0	GIODOUTH	R/W	0h	GIO data output for pins in port H

Copyright © 2025 Texas Instruments Incorporated

11.1.1.5.73 GIOSETH Register (Offset = 120h) [Reset = 00000000h]

GIOSETH is shown in Table 11-75.

Return to the Summary Table.

GIO data set for Port H

Table 11-75. GIOSETH Register Field Descriptions

Bit	Field	Type	Reset	Description
31-8	NU28	R/W	0h	Reserved
7-0	GIODSETH	R/W	0h	GIO data set for port H

Copyright © 2025 Texas Instruments Incorporated

11.1.1.5.74 GIOCLRH Register (Offset = 124h) [Reset = 00000000h]

GIOCLRH is shown in Table 11-76.

Return to the Summary Table.

GIO data clear for Port H

Table 11-76. GIOCLRH Register Field Descriptions

Bit	Field	Type	Reset	Description
31-8	NU34	R/W	0h	Reserved
7-0	GIODCLRH	R/W	0h	GIO data clear for port H

Copyright © 2025 Texas Instruments Incorporated

11.1.1.5.75 GIOPDRH Register (Offset = 128h) [Reset = 00000000h]

GIOPDRH is shown in Table 11-77.

Return to the Summary Table.

GIO open drain for Port H

Table 11-77. GIOPDRH Register Field Descriptions

Bit	Field	Type	Reset	Description
31-8	NU40	R/W	0h	Reserved
7-0	GIOPDRH	R/W	0h	GIO open drain for port H

Copyright © 2025 Texas Instruments Incorporated

11.1.1.5.76 GIOPULDISH Register (Offset = 12Ch) [Reset = 00000000h]

GIOPULDISH is shown in Table 11-78.

Return to the Summary Table.

GIO pul disable for port H

Table 11-78. GIOPULDISH Register Field Descriptions

Bit	Field	Type	Reset	Description
31-8	NU40	R/W	0h	Reserved
7-0	GIOPULDISH	R/W	0h	GIO pull disable for port H

Copyright © 2025 Texas Instruments Incorporated

11.1.1.5.77 GIOPSLH Register (Offset = 130h) [Reset = 00000000h]

GIOPSLH is shown in Table 11-79.

Return to the Summary Table.

GIO pul select for port H

Table 11-79. GIOPSLH Register Field Descriptions

Bit	Field	Type	Reset	Description
31-8	NU40	R/W	0h	Reserved
7-0	GIOPSLH	R/W	0h	GIO pull select for port H

Copyright © 2025 Texas Instruments Incorporated

11.1.1.5.78 GIOSRCA Register (Offset = 134h) [Reset = 00000000h]

GIOSRCA is shown in Table 11-80.

Return to the Summary Table.

GIO slew rate select for port A

Table 11-80. GIOSRCA Register Field Descriptions

Bit	Field	Type	Reset	Description
31-8	NU35	R/W	0h	Reserved
7-0	GIOSRCA	R/W	0h	GIO slew rate control for port A

Copyright © 2025 Texas Instruments Incorporated

11.1.1.5.79 GIOSRCB Register (Offset = 138h) [Reset = 00000000h]

GIOSRCB is shown in Table 11-81.

Return to the Summary Table.

GIO slew rate select for port B

Table 11-81. GIOSRCB Register Field Descriptions

Bit	Field	Type	Reset	Description
31-8	NU36	R/W	0h	Reserved
7-0	GIOSRCB	R/W	0h	GIO slew rate control for port B

Copyright © 2025 Texas Instruments Incorporated

11.1.1.5.80 GIOSRCC Register (Offset = 13Ch) [Reset = 00000000h]

GIOSRCC is shown in Table 11-82.

Return to the Summary Table.

GIO slew rate select for port C

Table 11-82. GIOSRCC Register Field Descriptions

Bit	Field	Type	Reset	Description
31-8	NU37	R/W	0h	Reserved
7-0	GIOSRCC	R/W	0h	GIO slew rate control for port C

Copyright © 2025 Texas Instruments Incorporated

11.1.1.5.81 GIOSRCD Register (Offset = 140h) [Reset = 00000000h]

GIOSRCD is shown in Table 11-83.

Return to the Summary Table.

GIO slew rate select for port D

Table 11-83. GIOSRCD Register Field Descriptions

Bit	Field	Type	Reset	Description
31-8	NU38	R/W	0h	Reserved
7-0	GIOSRCD	R/W	0h	GIO slew rate control for port D

Copyright © 2025 Texas Instruments Incorporated

11.1.1.5.82 GIOSRCE Register (Offset = 144h) [Reset = 00000000h]

GIOSRCE is shown in Table 11-84.

Return to the Summary Table.

GIO slew rate select for port E

Table 11-84. GIOSRCE Register Field Descriptions

Bit	Field	Type	Reset	Description
31-8	NU39	R/W	0h	Reserved
7-0	GIOSRCE	R/W	0h	GIO slew rate control for port E

Copyright © 2025 Texas Instruments Incorporated

11.1.1.5.83 GIOSRCF Register (Offset = 148h) [Reset = 00000000h]

GIOSRCF is shown in Table 11-85.

Return to the Summary Table.

GIO slew rate select for port F

Table 11-85. GIOSRCF Register Field Descriptions

Bit	Field	Type	Reset	Description
31-8	NU40	R/W	0h	Reserved
7-0	GIOSRCF	R/W	0h	GIO slew rate control for port F

Copyright © 2025 Texas Instruments Incorporated

11.1.1.5.84 GIOSRCG Register (Offset = 14Ch) [Reset = 00000000h]

GIOSRCG is shown in Table 11-86.

Return to the Summary Table.

GIO slew rate select for port G

Table 11-86. GIOSRCG Register Field Descriptions

Bit	Field	Type	Reset	Description
31-8	NU39	R/W	0h	Reserved
7-0	GIOSRCG	R/W	0h	GIO slew rate control for port G

Copyright © 2025 Texas Instruments Incorporated

11.1.1.5.85 GIOSRCH Register (Offset = 150h) [Reset = 00000000h]

GIOSRCH is shown in Table 11-87.

Return to the Summary Table.

GIO slew rate select for port H

Table 11-87. GIOSRCH Register Field Descriptions

Bit	Field	Type	Reset	Description
31-8	NU40	R/W	0h	Reserved
7-0	GIOSRCH	R/W	0h	GIO slew rate control for port H

Copyright © 2025 Texas Instruments Incorporated

11.1.1.6 I/O Control Summary

The behavior of the output buffer and the pull control is summarized in Table 11-88.

Table 11-88. Output Buffer and Pull Control Behavior for GIO Pins

Module under Reset?	Pin Direction (GIODIR)(1) (2)	Open Drain Enable (GIOPDR)(1)	Pull Disable (GIOPULDIS)(1) (3)	Pull Select (GIOPSL)(1) (4)	Pull Control	Output Buffer(5)
Yes	X	X	X	X	Enabled	Disabled
No	0	X	0	0	Pull down	Disabled
No	0	X	0	1	Pull up	Disabled
No	0	X	1	0	Disabled	Disabled
No	0	X	1	1	Disabled	Disabled
No	1	0	X	X	Disabled	Enabled
No	1	1	X	X	Disabled	Enabled

(1) X = Don't care
(2) GIODIR = 0 for input; = 1 for output
(3) GIOPULDIS = 0 for enabling pull control; = 1 for disabling pull control
(4) GIOPSL= 0 for pull-down functionality; = 1 for pull-up functionality
(5) If open drain is enabled, output buffer will be disabled if a high level (1) is being output.

11.1.2 Inter-Integrated Circuit (I2C) Module

This chapter describes the inter-integrated circuit (I2C or I^2C) module. The I2C is a multi-Target communication module providing an interface between the Texas Instruments (TI) microcontroller and devices compliant with Philips Semiconductor I^2C-bus specification version 2.1 and connected by an I2C-bus. This module will support any Controller or Target I2C compatible device.

11.1.2.1 Overview

The I2C has the following features:

- Compliance to the Philips (now NXP Semiconductors) I^2C bus specification, v2.1 (*The I 2 C Specification,* Philips document number 9398 393 40011)
  - Bit/Byte format transfer
  - 7-bit and 10-bit device addressing modes
  - General call
  - START byte
  - Multi-controller transmitter/target receiver mode
  - Multi-controller receiver/target transmitter mode
  - Combined controller transmit/receive and receive/transmit mode
  - Transfer rates of 10 kbps up to 400 kbps (Fast mode transfer rate)
- Free data format
- Two DMA events (transmit and receive)
- DMA event enable/disable capability
- Seven interrupts that can be used by the CPU
- Operates with VBUS frequency from 6.7 MHz up
- Operates with module frequency between 6.7 MHz and 13.3 MHz
- Module enable/disable capability
- The SDA and SCL are optionally configurable as general purpose I/O
- Slew rate control of the outputs
- Open drain control of the outputs
- Programmable pullup/pulldown capability on the inputs
- Supports Ignore NACK mode

The device has three instances of I2C called:

- MSS_I2CA

Copyright © 2025 Texas Instruments Incorporated

- RCSS_I2CA
- RCSS_I2CB

Note

This I2C module does **not** support:

- High-speed (HS) mode (only supports up to 400 kbps (Fast mode))
- C-bus compatibility mode
- The combined format in 10-bit address mode (the I2C sends the target address second byte every time it sends the target address first byte)

11.1.2.1.1 Introduction to the I2C Module

The I2C module supports any target or controller I2C-compatible device. Figure 11-6 shows an example of multiple I2C serial ports connected for a two-way transfer from one device to another device.

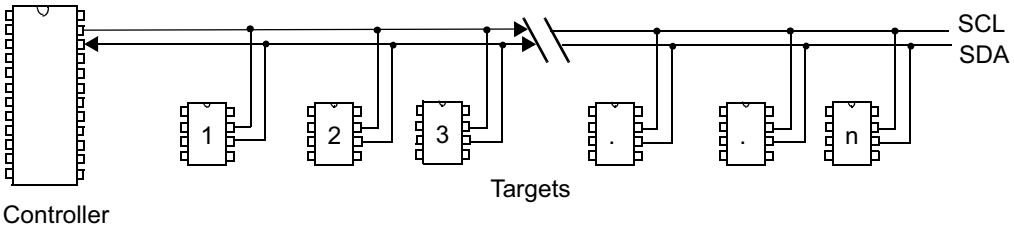

Figure 11-6. Multiple I2C Modules Connection Diagram

11.1.2.1.2 Functional Overview

The I2C module is a serial bus that supports multiple Controller devices. In multi Controller mode, one or more devices can be connected to the same bus and are capable of controlling the bus. Each I2C device on the bus is recognized by a unique address and can operate as either a transmitter or a receiver, depending on the function of the device. In addition to being a transmitter or receiver, a device connected to the I2C bus can also be considered a Controller or a Target when performing data transfers.

Note

A Controller device is the device that initiates the data transfer on a bus and generates the clock signal that permits the transfer. During the transmission, any device addressed by the Controller is considered the Target.

Data is communicated to devices interfacing to the I2C module using the serial data pin (SDA) and the serial clock pin (SCL) as shown in Figure 11-7. These two wires carry information between the device and the other devices connected to the I2C bus. Both SDA and SCL pins on the device are bidirectional. They must be connected to a positive supply voltage through a pull-up resistor. When the bus is free, both pins are high. The driver of these two pins has an open-drain configuration to perform the wired-AND function.

The device has a special mode that can be entered to ignore a NACK generated from non-compliant I2C devices that are incapable of generating an ACK.

The I2C module consists of the following Controller blocks:

- A serial Interface: one data pin (SDA) and one clock pin (SCL)
- The device register interface
  - Data registers to temporarily hold received data and transmitted data traveling between the SDA pin and the CPU or the DMA
  - Control and status registers
- A prescaler to divide down the input clock that is driven to the I2C module
- A peripheral bus interface to enable the CPU and DMA to access the I2C module registers

Copyright © 2025 Texas Instruments Incorporated

- An arbitrator to handle arbitration between the I2C module (when configured as a Controller) and another Controller
- Interrupt generation logic (interrupts can be sent to the CPU)
- A clock synchronizer that synchronizes the I2C input clock (from the system module) and the clock on the SCL pin, and synchronizes data transfers with controllers of different clock speeds.
- A noise filter on each of the two serial pins
- DMA event generation logic that synchronizes data reception and data transmission in the I2C module for DMA transmission

In Figure 11-7, the CPU or the DMA writes data for transmission to I2CDXR and reads received data from I2CDRR. When the I2C module is configured as a transmitter, data written to I2CDXR is copied to I2CXSR and shifted out one bit at a time. When the I2C module is configured as a receiver, received data is shifted into I2CRSR and then copied to I2CDRR.

When the I2C function is not needed, the pins may be controlled as general-purpose input/output (GPIO) pins. The I/O structure of each pin includes:

- programmable slew rate control of the outputs
- open drain mode
- programmable pull enable/disable on the input
- programmable pull up/pull down function on the input

Copyright © 2025 Texas Instruments Incorporated

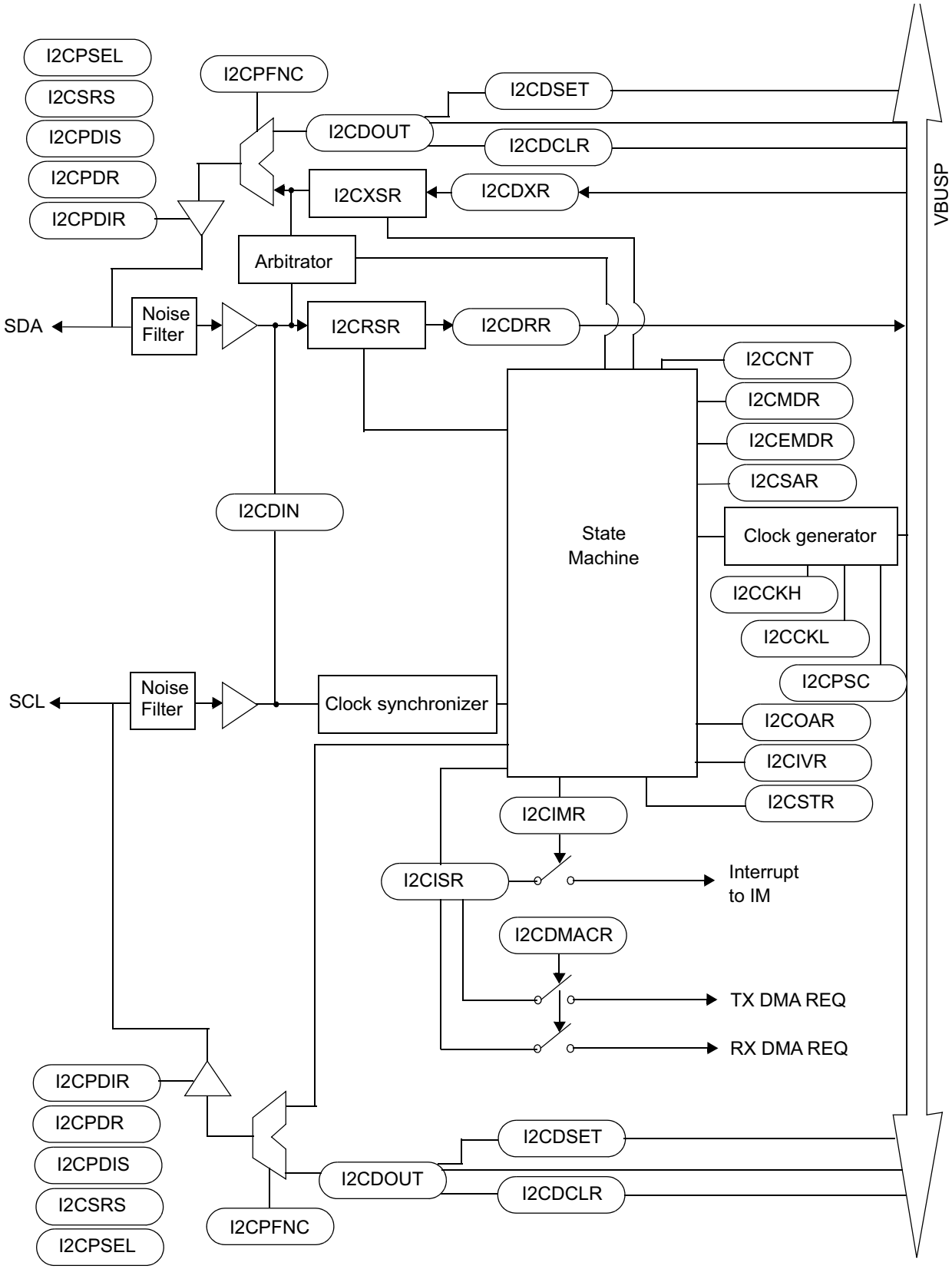

Figure 11-7. Simple I2C Block Diagram

Copyright © 2025 Texas Instruments Incorporated

11.1.2.1.3 Clock Generation

As shown in Figure 11-8, the I2C module uses the input clock generated from the device clock generator to generate the module clock and Controller clock. The I2C input clock is the device peripheral clock (VBUS_CLK). The clock is then divided twice more inside the I2C module to produce the module clock and the Controller clock.

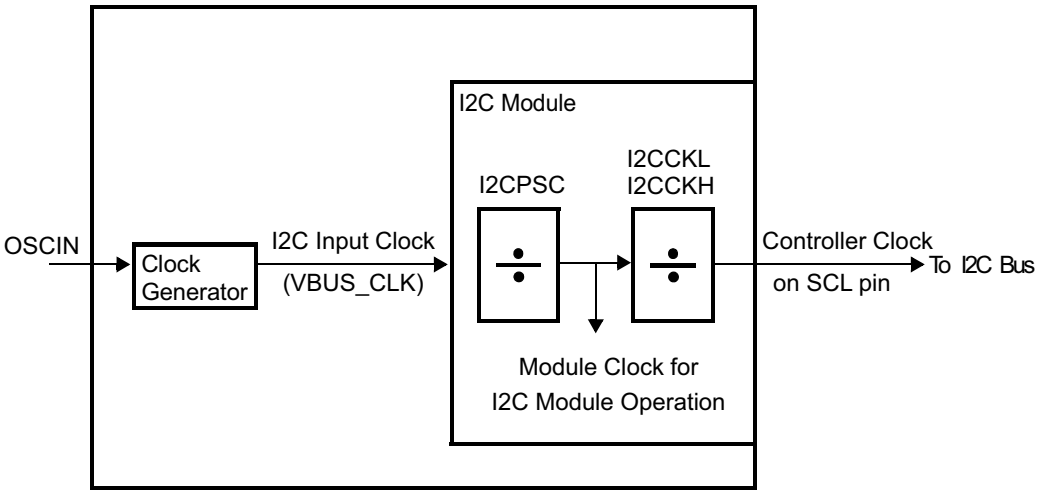

Figure 11-8. Clocking Diagram for the I2C Module

The module clock determines the frequency at which the I2C module operates. A programmable prescaler in the I2C module divides down the input clock to produce the module clock. To specify the divide-down value, initialize the I2CPSC field of the prescaler register, I2CPSC. The resulting frequency is:

$$ModuleClockFrequency - \frac{I2CInputClockFrequency}{(ICPSC + 1)} \quad (4)$$

The module clock frequency must be between 6.7MHz and 13.3MHz. The prescaler can only be initialized while the I2C module is in the reset state (IRS = 0 in I2CMDR). The prescaled frequency takes effect only when IRS is changed to 1. Changing the I2CPSC value while IRS = 1 has no effect.

The Controller clock appears on the SCL pin when the I2C module is configured to be a Controller on the I2C bus. This clock controls the timing of the communication between the I2C module and a secondary. As shown in Figure 11-8, a second clock divider in the I2C module divides down the module clock to produce the Controller clock. The clock divider uses the I2CCKL to divide down the low portion of the module clock signal and uses the I2CCKH to divide down the high portion of the module clock signal.

The resulting frequency is:

$$ControllerClockFrequency = \frac{ModuleClockFrequency}{(ICCLKL + d) + (ICCLKH + d)} \quad (5)$$

$$ControllerClockFrequency = \frac{I2CInputClockFrequency}{(ICPSC + 1)((ICCLKL + d) + (ICCLKH + d))} \quad (6)$$

where *d* depends on the value of I2CPSC:

I2CPSC	d
0	7
1	6

Copyright © 2025 Texas Instruments Incorporated

I2CPSC	d
Greater than 1	5

Note

The Controller clock frequency defined above does not include rise/fall time and latency of the synchronizer inside the module. The actual transfer rate will be slower than the value calculated from the formula above. Also, due to the nature of SCL synchronization, the SCL clock period could change if SCL synchronization is taking place.

11.1.2.2 I2C Module Operation

The following section discusses how the I2C module operates.

11.1.2.2.1 Input and Output Voltage Levels

One clock pulse is generated by the Controller device for each data bit transferred. Because of a variety of different technology devices that can be connected to the I2C-bus, the levels of logic 0 (low) and logic 1 (high) are not fixed and depend on the associated level of V_{CCIO}. For details, see the device specific data sheet.

11.1.2.2.2 I2C Module Reset Conditions

The I2C module can be reset in the following two ways:

- Through the global peripheral reset. A device reset causes a global peripheral reset.
- By clearing the $\overline{IRS}$ bit in the I2C mode register (I2CMDR). When the global peripheral reset is removed, the $\overline{IRS}$ bit is cleared to 0, keeping the I2C module in the reset state.

11.1.2.2.3 I2C Module Data Validity

The data on the SDA must be stable during the high period of the clock. See Figure 11-9. The high and low state of the data line, the SDA, can only change when the clock signal on the serial clock line (SCL) is low.

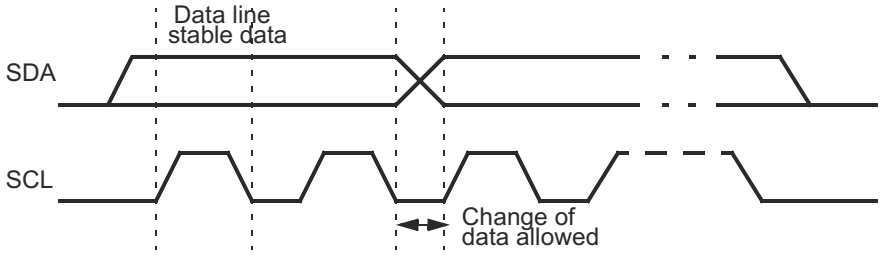

Figure 11-9. Bit Transfer on the I2C Bus

Copyright © 2025 Texas Instruments Incorporated

11.1.2.2.4 I2C Module Start and Stop Conditions

START and STOP conditions are generated by a primary I2C module.

- The START condition is defined as a high-to-low transition on the SDA line while SCL is high. A primary drives this condition to indicate the start of data transfer. The bus is considered to be busy after the START condition, and the bus busy bit (BB) in I2CSR is set to 1.
- The STOP condition is defined as a low-to-high transition on the SDA line while SCL is high. A primary drives this condition to indicate the end of data transfer. The bus is considered to be free after the STOP condition, therefore the BB bit in I2CSR is cleared to 0.

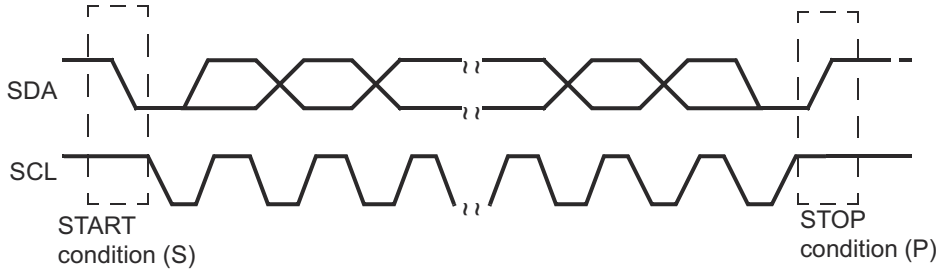

Figure 11-10. I2C Module START and STOP Conditions

For the I2C module to start a data transfer with a START condition, the primary mode bit (MST) and the START condition bit (STT) in the I2CMDR must both be set to 1. For the I2C module to end a data transfer with a STOP condition, the STOP condition bit (STP) must be set to 1. When the BB bit is set to 1 and the STT bit is set to 1, a repeated START condition is generated.

11.1.2.2.5 Serial Data Formats

The I2C module operates in byte data format. Each message put on the SDA line is 2 to 8-bits long. The number of messages that can be transmitted or received is unrestricted. The data is transferred with the most significant bit (MSB) first (Figure 11-11). Each message is followed by an acknowledge bit from the I2C if it is in receiver mode. The I2C module does not support little endian systems.

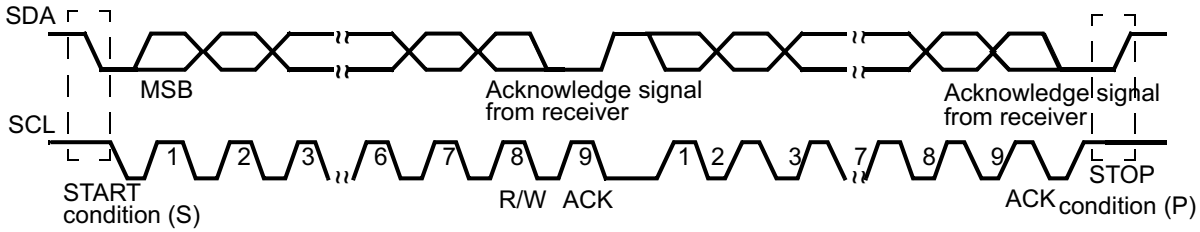

Figure 11-11. I2C Module Data Transfer

The first byte after a START condition (S) always consists of 8 bits that comprise either a 7-bit address plus the R/ $\overline{W}$ bit, or 8 data bits. The eighth bit, R/W, in the first byte determines the direction of the data. When the R/ $\overline{W}$ bit is 0, the Controller writes (transmits) data to a selected Target device; when the R/ $\overline{W}$ bit is 1, the Controller reads (receives) data from the Target device. In acknowledge mode, an extra bit dedicated for the acknowledgment (ACK) bit is inserted after each message.

The I2C module supports the following formats:

- 7-bit addressing format (Figure 11-12)
- 10-bit addressing format (Figure 11-13)
- 7-bit/10-bit addressing format with repeated START condition (Figure 11-14)
- Free-data format (Figure 11-15)

Copyright © 2025 Texas Instruments Incorporated

11.1.2.2.5.1 7-Bit Addressing Format

In the 7-bit addressing format (Figure 11-12), the first byte after the START condition consists of a 7-bit secondary address followed by the R/ $\overline{W}$ bit (in the LSB). The R/ $\overline{W}$ bit determines the direction of the data transfer:

- R/ $\overline{W}$ = 0: The primary writes (transmits) data to the addressed secondary.
- R/ $\overline{W}$ = 1: The primary reads (receives) data from the secondary.

An extra clock cycle dedicated for acknowledgement (ACK) is inserted after each byte. If the ACK is inserted by the secondary after the first byte from the primary, it is followed by n bits of data from the transmitter (primary or secondary, depending on the R/ $\overline{W}$ bit). The device I2C allows n to be a number between 2 to 8, programmable by the bit count (BC) field of I2CMDR. After the data bits have been transferred, the receiver inserts an ACK bit.

To select the 7-bit addressing format, write 0 to the expanded address enable (XA) bit of I2CMDR and make sure the free data format mode is off (FDF = 0 in I2CMDR).

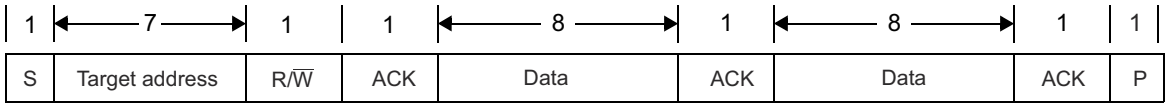

Figure 11-12. I2C Module 7-Bit Addressing Format

11.1.2.2.5.2 10-Bit Addressing Format

The 10-bit addressing format is similar to the 7-bit addressing format, but the primary sends the secondary address in two separate byte transfers. In the 10-bit addressing format (Figure 11-13), the first byte is 11110b, the two MSBs of the 10-bit secondary address, and the R/ $\overline{W}$ bit. The ACK bit is inserted after each byte. The second byte is the remaining 8 bits of the 10-bit secondary address. The secondary must send an acknowledgment after each of the two byte transfers. Once the primary has written the second byte to the secondary, the primary can either write data or use repeated a START condition to change the data direction.

To select the 10-bit addressing format, write 1 to the expanded address enable (XA) bit of I2CMDR and make sure the free data format mode is off (FDF = 0 in I2CMDR).



Figure 11-13. I2C Module 10-bit Addressing Format

11.1.2.2.5.3 Using the Repeated START Condition

At the end of each byte, the primary can drive another START condition (Figure 11-14). Using this capability, a primary can transmit/receive any number of data bytes before generating a STOP condition. The length of a data byte can be from 2 to 8 bits. The repeated START condition can be used with the 7-bit addressing, 10-bit addressing, or the free data formats.

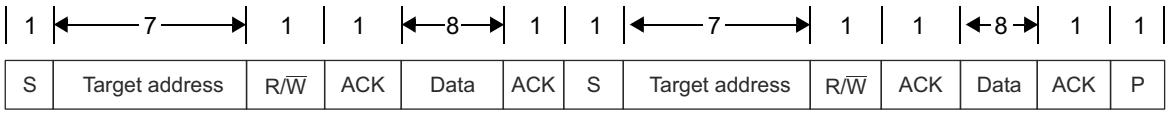

Figure 11-14. I2C Module 7-Bit Addressing Format with Repeated START

Copyright © 2025 Texas Instruments Incorporated

11.1.2.2.5.4 Free Data Format

In this format (Figure 11-15), the first byte after a START condition is a data byte. The ACK bit is inserted after each byte, followed by another 8 bits of data. No address or data direction bit is sent. Therefore, the transmitter and receiver must both support the free data format. The direction of data transmission (transmit or receive) remains constant throughout the transfer.

To select the free data format, write a 1 to the free data format (FDF) bit of the I2CMDR. The free data format is not supported in the digital loop back mode.

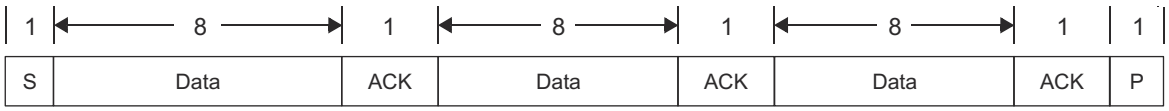

Figure 11-15. I2C Module in Free Data Format

11.1.2.2.6 NACK Bit Generation

When the I2C module is a receiver (Controller or Target), it can acknowledge or ignore bits sent by the transmitter. To ignore any new bits, the I2C module must send a no-acknowledge (NACK) bit during the acknowledge cycle on the bus. Table 11-89 summarizes the various ways a NACK can be generated.

Table 11-89. Ways to Generate a NACK Bit

I2C Module Condition	Basic NACK Bit Generation Options	Additional Option
Target receiver mode	Disable data transfers (STT = 0) Allow an overrun condition (RSFULL = 1) Reset the module (IRS = 0)	Set the NACKMOD bit before the rising edge of the last data bit you intend to receive.
Controller receiver mode and repeat mode (RM = 1)	Generate a STOP condition (STP = 1) Reset the module (IRS = 0)	Set the NACKMOD bit before the rising edge of the last data bit you intend to receive.
Controller receiver mode with non-repeat mode (RM = 0)	If STP = 1, allow the internal data counter to count down to 0 and thus force a STOP condition. If STP = 0, make STP = 1 to generate a STOP condition. Reset the module (IRS = 0)	Set the NACKMOD bit before the rising edge of the last data bit you intend to receive.

In some applications, the Target cannot generate the ACK signal. If the IGNACK bit is set in the I2CEMDR register, the resulting NACK will be ignored and the I2C block will continue the data transfer.

Copyright © 2025 Texas Instruments Incorporated

11.1.2.3 I2C Operation Modes

11.1.2.3.1 Controller Transmitter Mode

All primaries begin in this mode. The I2C module is a Controller and transmits control information and data to a Target. In this mode, data assembled in any of the addressing formats shown in Figure 11-12, Figure 11-13, or Figure 11-14 is shifted out onto the SDA pin and synchronized with the self-generated clock pulses on the SCL pin. The clock pulses are inhibited and the SCL pin is held low when the intervention of the device is required ($\overline{\text{XSMT}}$ = 0) after a byte has been transmitted.

Note

If the I2C is configured for two simultaneous Controller transmissions, wait until the MST and BB have been reset before performing the second Controller transmission.

Failure to wait for the MST and BB to reset will prevent the start condition on the second transfer from being issued and the bus BB will not be set. Typically the end of the first transfer is handled by polling BB. However, the MST bit is not reset at the same instant as the BB bit. As a result, when the second Controller transmission is initiated before the resetting of the MST, the MST bit for the second transfer is reset. This prevents the I2C from recognizing itself as the Controller, thus failing to occupy the bus.

11.1.2.3.2 Controller Receiver Mode

In this mode, the I2C module is a Controller and receives data from a Target. This mode can only be entered from the Controller transmitter mode (the I2C module must first transmit a command to the Target). In any of the addressing formats shown in Figure 11-12, Figure 11-13, or Figure 11-14, the Controller receiver mode is entered after the Target address byte and the R/ $\overline{\text{W}}$ bit have been transmitted (if the R/ $\overline{\text{W}}$ bit is 1). Serial data bits received on the SDA pin are shifted in with the self-generated clock pulses on the SCL pin. The clock pulses are inhibited and the SCL is held low when the intervention of the device is required (RSFULL = 1) after a byte has been received. At the end of the transfer, the Controller-receiver signals the end of data to the Target-transmitter by not generating an acknowledge on the last byte that was clocked out of the Target. The Target-transmitter then releases the data line allowing the Controller-receiver to generate a STOP condition or a repeated START condition.

In many applications, the size of the message is in the initial bytes of the message itself. Since the size of the message is not known to the Controller before the transmission/reception starts, the Controller must use the repeat mode to force the stop condition when the reception is completed. The repeat mode is enabled by setting the RM bit to 1. Due to the double buffer implementation on the receive side, the Controller must generate the stop condition (STP =1) after reading the (message size - 1)th data.

11.1.2.3.3 Target Transmitter Mode

In this mode, the I2C module is a Target and transmits data to a Controller. This mode can only be entered from the Target receiver mode (The I2C module must first receive a command from the Controller). In any of the addressing formats shown in Figure 11-12, Figure 11-13, or Figure 11-14, the Target transmitter mode is entered if the Target address byte is the same as its own address and the R/ $\overline{\text{W}}$ bit has been transmitted (if the R/ $\overline{\text{W}}$ bit is set to 1). The Target transmitter shifts the serial data out on the SDA pin with the clock pulses that are generated by the Controller device. The Target device does not generate the clock, but it can hold the SCL pin low when intervention of the device is required ($\overline{\text{XSMT}}$ = 0) after a byte has been transmitted.

11.1.2.3.4 Target Receiver Mode

In this mode, the I2C module is a Target and receives data from a Controller. All Target begin in this mode. Serial data bits received on the SDA pin are shifted in with the clock pulses that are generated by the Controller device. The Target device does not generate the clock, but it can hold the SCL pin low while intervention of the device is required (RSFULL = 1) after a byte has been received.

11.1.2.3.5 Free Run Mode

The I2C module can be placed in free run mode when the FREE bit (I2CMDR.14) is set to 1. This bit is primarily used on an emulator when encountering a break point while debugging software. When the FREE bit is set to

Copyright © 2025 Texas Instruments Incorporated

0, the I2C responds differently depending on whether the SCL is high or low. If the SCL is low, the I2C stops immediately and keeps driving the SCL low whether the I2C is the Controller transmitter or receiver. If the SCL is high, the I2C waits until the SCL becomes a low and then stops. If the I2C is a Target, it stops when the transmission/reception completes.

11.1.2.3.6 Ignore NACK Mode

The I2C module can be placed in the ignore NACK mode by setting the IGNACK bit in the I2CEMDR register. This mode allows an I2C module that is configured as a Controller transmitter to ignore a NACK from a Target device that is not capable of generating a proper ACK signal.

Copyright © 2025 Texas Instruments Incorporated

11.1.2.4 I2C Module Integrity

The following section discusses how the I2C module maintains priorities and order among signals and commands.

11.1.2.4.1 Arbitration

If two or more Controller transmitters simultaneously start a transmission on the same bus, an arbitration procedure is invoked. Figure 11-16 illustrates the arbitration procedure between two devices. The arbitration procedure uses the data presented on the SDA bus by the competing transmitters. The first Controller transmitter that generates a high is overruled by the other Controller that generates a low. The arbitration procedure gives priority to the device that transmits the serial data stream with the lowest binary value. The Controller transmitter that loses the arbitration switches to the Target receiver mode, sets the arbitration lost (AL) flag, and generates the arbitration-lost interrupt. The data transmitted by the other Controller module is salvaged, and the I2C continues to receive data from the Controller module. Should two or more devices send identical first bytes, arbitration continues on the subsequent bytes.

If, during a serial transfer, the arbitration procedure is still in progress when a repeated START condition or STOP condition is transmitted to I2C bus, the Controller transmitters involved must send the repeated START condition or STOP condition at the same position in the format frame. In other words, arbitration is not allowed between:

- A repeated START condition and a data bit
- A STOP condition and a data bit
- A repeated START condition and a STOP condition

Secondarys are not involved in the arbitration procedure.

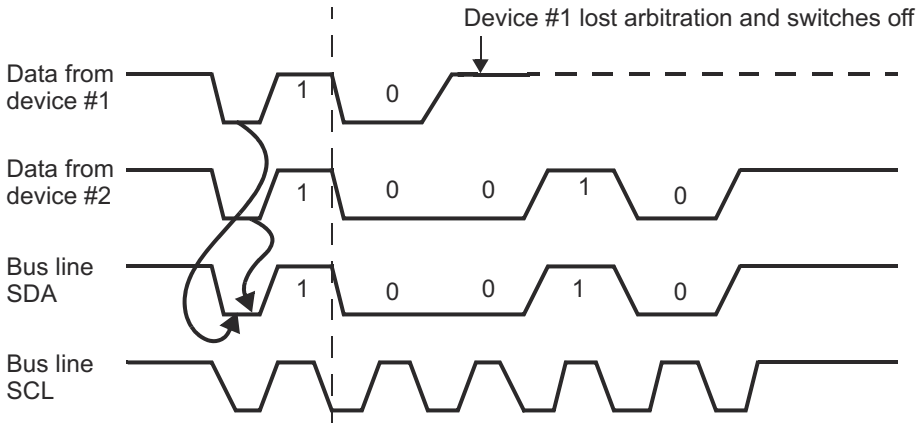

Figure 11-16. Arbitration Procedure Between Two Controller Transmitters

Copyright © 2025 Texas Instruments Incorporated

11.1.2.4.2 I2C Clock Generation and Synchronization

Under normal conditions only one Controller device generates the clock signal; the SCL. During the arbitration procedure, however, there are two or more Controller devices and the clock must be synchronized so that the data output can be compared. Figure 11-17 illustrates clock synchronization. The wired-AND property of the SCL line means that a device that first generates a low period on the SCL overrules the other devices. At this high-to-low transition, the clock generators of the other devices are forced to start their own low period. The SCL line is held low by the device with the longest low period. The other devices that finish their low periods must wait for the SCL line to be released before starting their high periods. A synchronized signal on the SCL is obtained where the slowest device determines the length of the low period and the fastest device determines the length of the high period.

If a device pulls down the clock line for a longer time, the result is that all clock generators must enter the wait state. In this way, a Target slows down a fast Controller and the slow device creates enough time to store a received byte or to prepare a byte to be transmitted.

Note

I2C Protocol Fault

The following conditions violate the clock spec as defined in the Philips I^2C bus specification, v2.1 (*The I 2 C Specification,* Philips document number 9398 393 40011), and will result in an I2C protocol fault: I2CCLKH = 2 I2CCLKL = 2I2CPSC = 2. This will cause the SDA data transition to occur while the SCL is high.

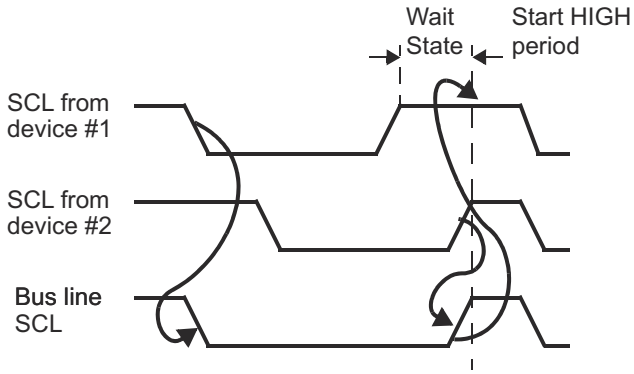

Figure 11-17. Synchronization of Two I2C Clock Generators During Arbitration

11.1.2.4.3 Prescaler

The I2C module is operated by the module clock. This clock is generated by way of the I2C prescaler block. The prescaler block consists of a 8-bit register, I2CPSC, used for dividing down the device peripheral clock (VBUS_CLK) to obtain a module clock between 6.7 MHz and 13.3 MHz.

11.1.2.4.4 Noise Filter

The noise filter is used to suppress any noises that are 50ns or less. It is designed to suppress noise with one module clock, assuming the lower and upper limits of the module clock are 6.7MHz and 13.3MHz, respectively.

Copyright © 2025 Texas Instruments Incorporated

11.1.2.5 Operational Information

The following section provides specific information about how the I2C module operates.

11.1.2.5.1 I2C Module Interrupts

The I2C module generates seven types of interrupts. These seven interrupts are accompanied with seven interrupt mask bits in the interrupt mask register (I2CIMR) and with seven interrupt flag bits in the status register (I2CSR).

11.1.2.5.1.1 I2C Interrupt Requests

The I2C module generates the interrupt requests described below. All requests are multiplexed through an arbiter into a single I2C interrupt request to the CPU. Each interrupt request has a flag bit and an enable bit. Interrupts must be enabled prior to the occurrence of the expected interrupt condition. When one of the specified events occurs, the flag bit is set. If the corresponding enable bit is 0, the interrupt request is blocked. If the enable bit is 1, the interrupt request is forwarded to the CPU as an I2C interrupt request. As an alternative, the CPU can poll all of the bits shown in Table 11-90.

Table 11-90. Interrupt Requests Generated by I2C Module

Flag	Name	Generated
AL	Arbitration-lost interrupt	Generated when the I2C module has lost an arbitration contest with another Controller-transmitter
NACK	No-acknowledge interrupt	Generated when the Controller I2C does not receive an acknowledge from the receiver
ARDY	Register-access-ready interrupt	Generated when the previously programmed address, data and command have been performed and the status bits have been updated. The interrupt is used to notify the device that the I2C registers are ready to be accessed.
RXRDY	Receive-data-ready interrupt	Generated when the received data in the receive-shift register (I2CSR) has been copied into the data receive register (I2CDRR). The RXRDY bit can also be polled by the device to determine when to read the received data in the I2CDRR.
TXRDY	Transmit-data-ready interrupt	Generated when the transmitted data has been copied from the data transmit register (I2CDXR) into the transmit-shift register (I2CXSR). The TXRDY bit can also be polled by the device to determine when to write the next data into I2CDXR.
SCD	Stop-condition-detect interrupt	Generated when a STOP condition has been detected.
AAS	Address-as-Target interrupt	Generated when the I2C has recognized its own Target address or an address of all zeroes.

11.1.2.5.2 DMA Controller Events

The I2C module has two events that use the DMA controller to synchronously read received data (I2CREVNT) from I2CDRR, and synchronously write data (I2CWEVNT) to the transmit buffer, I2CDXR. The read and write events have the same timing as I2CRRDY (I2CRINT) and I2CXRDY (I2CXINT), respectively.

The CPU or the DMA controller reads the received data from I2CDRR and writes the data to be transmitted to I2CDXR. The RXRDY bit is automatically cleared when the DMA controller reads the I2CDRR register, and the TXRDY bit is automatically cleared when the DMA controller writes to the I2CDXR register.

Data written to I2CDXR is copied to I2CXSR and shifted out from the SDA pin when the I2C module is configured as a transmitter. When the I2C module is configured as a receiver, received data is shifted into ICRSR and copied to I2CDRR, which can be read by the CPU or the DMA controller.

A transmit event (I2CWEVNT) is generated after a START condition in Controller transmitter mode. This ensures that the DMA gets an event even if no Target returns an ACK to the Target address following the START condition.

Copyright © 2025 Texas Instruments Incorporated

Note

Unexpected DMA transmit and receive event

An unexpected DMA transmit event (ICXEVT) and a DMA receive event (ICXRDY) are generated in 10-bit, Controller transmit, repeat mode. This event occurs soon after the start condition but before the first bit of the address is transmitted. In this event, no DMA activity should be initiated without the Target ACK being received.

11.1.2.5.3 I2C Enable/Disable

The I2C module can be enabled or disabled with the I2C reset enable bit (IRS) in the I2C module register (I2CMDR). This occurs in one of two ways:

- Write 0 to the I2C reset bit (IRS) in I2CMDR. All status bits are forced to the default values and the I2C mode remains disabled until IRS is changed to 1. The SDA and SCL pins are in the high impedance state.
- Initiate a device reset by driving the $\overline{\text{PORRST}}$ pin low. The entire device is reset and is held in the reset state until the pin is released and is driven high. When $\overline{\text{PORRST}}$ is released, all I2C module registers are reset to their default values. The IRS bit is forced to 0, which resets the I2C module. The I2C module stays in the reset state until a 1 is written to the IRS bit.

IRS must be 0 while the I2C module is being configured. Forcing IRS to 0 can be used to save power and also clear error conditions.

11.1.2.5.4 General Purpose I/O

Both of the I2C pins can be programmed to be general-purpose I/O pins via the I2C pin control registers (I2CPFNC, I2CDIR, I2CDOUT, and I2CDIN).

When the I2C module is not used, the I2C pins may be programmed to be either general purpose input or general-purpose output pins. This function is controlled in the I2CDIR and I2CPFNC registers. Note that each pin can be programmed to be either an I2C pin or a GIO pin.

If the I2C function is to be used, the application software must ensure that each pin is configured as an I2C pin and not a GIO pin, or else unexpected behavior may result.

Copyright © 2025 Texas Instruments Incorporated

11.1.2.5.5 Pull Up/Pull Down Function

I2C module pins can have either an active pull up or active pull down that makes it possible to leave the pins unconnected externally. The pins can be programmed to have the active pull function enabled or disabled by writing to the corresponding bit in the I2CPDIS register. Please see the device-specific data sheet for the default internal pull (pull-up, pull-down or no pull) on the pins.

The pull on the pins is programmable to a setting other than the default internal pull as specified in the data sheet. The pins can be programmed to have either an active pull up or an active pull down function by writing to the corresponding bit in I2CPSEL register. The pull up/pull down function is active on the pin only when the pull enabled is programmed in the I2CPDIS register.

The pull up/pull down functions are deactivated when a bidirectional pin is configured as an output. At system reset, the pull up function of all the pins is enabled. Please see the device-specific data sheet for the current supplied by the pull up/pull down.

11.1.2.5.6 Open Drain Function

The I2C pins can be programmed to include an open drain function when they are configured as output pins. This is done by writing to the corresponding bit of the I2CPDR register. When the open drain function is enabled, a low value (0) written to the data output register forces the pin to a low output voltage (V_{OL} or lower), whereas a high value (1) written to the data output register forces the pin to a high-impedance state. The open drain function is disabled when the pin is configured as an input pin.

Copyright © 2025 Texas Instruments Incorporated

11.1.2.6 MSS_I2C Registers

Table 11-91 lists the memory-mapped registers for the MSS_I2C registers. All register offset addresses not listed in Table 11-91 should be considered as reserved locations and the register contents should not be modified.

Table 11-91. MSS_I2C Registers

Offset	Acronym	Register Name	Section
0h	ICOAR	ICOAR	Go
4h	ICIMR	ICIMR	Go
8h	ICSTR	ICSTR	Go
Ch	ICCLKL	ICCLKL	Go
10h	ICCLKH	ICCLKH	Go
14h	ICCNT	ICCNT	Go
18h	ICDRR	ICDRR	Go
1Ch	ICSAR	ICSAR	Go
20h	ICDXR	ICDXR	Go
24h	ICMDR	ICMDR	Go
28h	ICIVR	ICIVR	Go
2Ch	ICEMDR	ICEMDR	Go
30h	ICPSC	ICPSC	Go
34h	ICPID1	ICPID1	Go
38h	ICPID2	ICPID2	Go
3Ch	ICDMAC	ICDMAC	Go
40h	I2C_RESERVED1	I2C_RESERVED1	Go
44h	I2C_RESERVED2	I2C_RESERVED2	Go
48h	ICPFUNC	ICPFUNC	Go
4Ch	ICPDIR	ICPDIR	Go
50h	ICPDIN	ICPDIN	Go
54h	ICPDOUT	ICPDOUT	Go
58h	ICPDSET	ICPDSET	Go
5Ch	ICPDCLR	ICPDCLR	Go
60h	ICPDRV	ICPDRV	Go

Complex bit access types are encoded to fit into small table cells. Table 11-92 shows the codes that are used for access types in this section.

Table 11-92. MSS_I2C Access Type Codes

Access Type	Code	Description
Read Type		
R	R	Read
Write Type		
W	W	Write
Reset or Default Value		
-n		Value after reset or the default value

Copyright © 2025 Texas Instruments Incorporated

11.1.2.6.1 ICOAR Register (Offset = 0h) [Reset = 00000000h]

ICOAR is shown in Table 11-93.

Return to the Summary Table.

I2C Own Address register

Table 11-93. ICOAR Register Field Descriptions

Bit	Field	Type	Reset	Description
31-10	NU	R/W	0h	Reserved
9-0	A9_A0	R/W	0h	Own address. Use in both 7- and 10-bit address mode. Note that usercan program the I2C own address to any value as long as it does notconflict with other components in the system.

Copyright © 2025 Texas Instruments Incorporated

11.1.2.6.2 ICIMR Register (Offset = 4h) [Reset = 00000000h]

ICIMR is shown in Table 11-94.

Return to the Summary Table.

I2C Interrupt Mask/Status register

Table 11-94. ICIMR Register Field Descriptions

Bit	Field	Type	Reset	Description
31-7	NU	R/W	0h	Reserved
6	AAS	R/W	0h	Address As Slave interrupt mask bit. Setting a"1" to this bit unmasks the Address As Slave interrupt. Setting a"0" to this bit masks the Address As Slave interrupt.
5	SCD	R/W	0h	Stop Condition Detection mask bit. Setting a"1" to this bit unmasks the Stop Condition Detection interrupt. Setting a "0" to this bit masks the Stop Condition Detection interrupt.
4	ICXRDY	R/W	0h	Transmit Data Ready interrupt mask bit. Setting a"1" to this bit unmasks the Transmit Data Ready interrupt. Setting a"0" to this bit masks the Transmit Data Ready interrupt.
3	ICRRDY	R/W	0h	Receive Data Ready interrupt mask bit. Setting a"1" to this bit unmasks the Receive Data Ready interrupt. Setting a"0" to this bit masks the Receive Data Ready interrupt.
2	ARDY	R/W	0h	Register access ready interrupt mask bit. Setting a"1" to this bit unmasks the Register access ready interrupt. Setting a"0" to this bit masks the Register access ready interrupt.
1	NACK	R/W	0h	No Acknowledgement interrupt mask bit. Setting a"1" to this bit unmasks the No Acknowledgement interrupt. Setting a"0" to this bit masks the No Acknowledgement interrupt.
0	AL	R/W	0h	Arbitration Lost interrupt mask bit. Setting a"1" to this bit unmasks the Arbitration Lost interrupt. Setting a"0" to this bit masks the Arbitration Lost interrupt.

Copyright © 2025 Texas Instruments Incorporated

11.1.2.6.3 ICSTR Register (Offset = 8h) [Reset = 00000000h]

ICSTR is shown in Table 11-95.

Return to the Summary Table.

I2C Interrupt Status register

Table 11-95. ICSTR Register Field Descriptions

Bit	Field	Type	Reset	Description
31-15	NU2	R/W	0h	Reserved
14	SDIR	R/W	0h	Slave Direction. This bit is clear to '0' indicating the I2C is a master transmitter/ receiver or a slave receiver. This bit is also clear by STOP condition or START condition. It is set to '1' when the I2C slave is a transmitter. In DLB mode (which the configuration should be master-transmitter slave-receiver) this bit is clear to '0'. Writing a"1" to this bit to clear it.
13	NACKSNT	R/W	0h	A No Acknowledge is sent due to NACKMOD is set to a"1". NACKSNT = 0: A No Acknowledge is not sent. NACKSNT = 1: A No Acknowledge is sent. Writing a"1" to this bit to clear it.
12	BB	R/W	0h	Bus Busy. This bit indicates the state of the serial bus. BB= 0: The bus is free. BB= 1: The bus is occupied. On reception of a"start" condition the device sets BB to 1. This bit is also set if the I2C detects SCL low state. BB is clear to 0 after reception of a"stop" condition. BB is kept to"0" regardless SCL state when the I2C is in reset (IRS_=0). If the IRS_ is set to"1" during transaction between other I2C devices the BB bit is set at the first falling edge of SCL or START condition. - (RW)
11	RSFULL	R/W	0h	Receive shift full. This bit indicates whether the receiver has experienced overrun. Overrun occurs when the receive shift register (ICRSR) is full and ICDRR has not been read since the ICRSR-to-ICDRR transfer. The FSM is holding for ICDRR read access. RSFULL is clear when reading the ICDRR. RSFULL is set to"1" when the I2C has recognized an overrun. The contents of ICDRR are NOT lost in this case. In repeat mode since double buffer (ICRSR and ICDRR) behaves like a single buffer RSFULL is set to"1" every time the data is received. RSFULL is clear as a result of reading the ICDRR. - (RW)
10	XSMT	R/W	0h	Transmit shift empty not. This bit indicates whether the transmitter has experienced underflow. Underflow occurs when the transmit shift register (ICXSR) is empty and ICDXR has not been loaded. The FSM is holding for ICDXR write access. XSMT_ is cleared when underflow has occurred. XSMT_ is set to"1" as a result of writing to ICDXR. In repeat mode if the I2C in master transmitter mode is holding transfer with XSMT_=0 (i.e. waiting for further action) and the STT or STP bit is set XSMT_ is set to"1" by hardware.

Copyright © 2025 Texas Instruments Incorporated

Table 11-95. ICSTR Register Field Descriptions (continued)

Bit	Field	Type	Reset	Description
9	AAS	R/W	0h	Address As Slave. This bit is set to 1 by the device when it has recognized its own slave address or an address of all (8) zeros. The AAS bit is reset by stop condition or detection of any address byte that does not match ICOAR. - (RW)
8	AD0	R/W	0h	Address Zero Status: This bit is set to 1 by device if it detects the address of all (8) zeros (i.e. general call). The AD0 bit is reset to 0 (default value) when a"start" or"stop" condition is detected. - (RW)
7-6	NU1	R/W	0h	Reserved
5	SCD	R/W	0h	Stop Condition Detection bit SCD is set when the I2C sends or receives STOP condition. This bit is cleared by reading ICIVR (as 110) or writing '1' to itself.
4	ICXRDY	R/W	0h	Transmit Data Ready interrupt flag bit. ICXRDY is set to"1" is generated when the transmitted data has been copied from ICDXR to the transmit-shift register (ICXSR). ICRXDY is clear to"0" when the ICDXR is written. This bit can also be polled by the CPU to write a new transmitted data into the ICDXR. Write '1' to this bit will set it and DXR Write will clear it.
3	ICRRDY	R/W	0h	Receive Data Ready interrupt flag bit. ICRRDY is set to"1" when the received data has been copied from ICRSR into the ICDRR. ICRRDY is cleared to"0" when the ICDRR is read. This bit can also be polled by the CPU to read the received data in the ICDRR. Write '1' or DRR Read will clear it.
2	ARDY	R/W	0h	Register-access-ready interrupt flag bit. ARDY is generated by the hardware if the I2C is in the master mode when the previously programmed data and command has been performed and status bit has been updated. This flag is used by the CPU to let it knows that the I2C registers are ready to be accessed again. When RM=0 ARDY is set when the internal data count is passed 0 if STP register bit has not been set. When RM=1 ARDY is set at each byte end. If the I2C is in FDF mode(FDF=1) ARDY is set just after Start condition. This bit is automatically cleared by hardware when writing data to ICDXR in transmit mode reading data from ICDRR in receive mode or setting STT or STP bit. Write '1' will clear it.
1	NACK	R/W	0h	No-Acknowledgement interrupt flag bit. The No Acknowledge flag bit is set when the hardware in "master" mode detects no acknowledge has been received. This bit is NOT set by no-acknowledgement after Start byte Write '1' or Read the ICIVR (as 010) will clear it.
0	AL	R/W	0h	Arbitration-Lost interrupt flag bit. The Arbitration Lost flag bit is set to 1 when the device in the "master" mode senses it has lost an arbitration when two or more transmitters start a transmission almost simultaneously or when the I2C attempts to start a transfer while BB (bus busy) is 1. When this is set to 1 due to arbitration lost the MST/STT/STP bits are clear the I2C becomes a slave. Write '1' or Read the ICIVR (as 001) will clear it.

Copyright © 2025 Texas Instruments Incorporated

11.1.2.6.4 ICCLKL Register (Offset = Ch) [Reset = 00000000h]

ICCLKL is shown in Table 11-96.

Return to the Summary Table.

I2C Clock Divider Low register

Table 11-96. ICCLKL Register Field Descriptions

Bit	Field	Type	Reset	Description
31-16	NU	R/W	0h	Reserved
15-0	ICCL15_ICCL0	R/W	0h	Low time I 2 C SCL Clock Division Factor. They are used to divide down the master clock to create the SCL low time transition frequency. This register must be configured while the I2C is still in reset (IRS_=0).

Copyright © 2025 Texas Instruments Incorporated

11.1.2.6.5 ICCLKH Register (Offset = 10h) [Reset = 00000000h]

ICCLKH is shown in Table 11-97.

Return to the Summary Table.

I2C Clock Divider High register

Table 11-97. ICCLKH Register Field Descriptions

Bit	Field	Type	Reset	Description
31-16	NU	R/W	0h	Reserved
15-0	ICCH15_ICCLH0	R/W	0h	High time I 2 C SCL Clock Division Factor. They are used to divide down the master clock to create the SCL high time transition frequency. This register must be configured while the I2C is still in reset (IRS_=0).

Copyright © 2025 Texas Instruments Incorporated

11.1.2.6.6 ICCNT Register (Offset = 14h) [Reset = 00000000h]

ICCNT is shown in Table 11-98.

Return to the Summary Table.

I2C Data Count register

Table 11-98. ICCNT Register Field Descriptions

Bit	Field	Type	Reset	Description
31-16	NU	R/W	0h	Reserved
15-0	ICDC15_ICDC0	R/W	0h	Data count. This data count register is used to generate a Stop condition if a Stop condition is specified (STP=1). . ICCNT=1 data count is 1 :: :: ICCNT=0FFFFh data count is 65535 ICCNT=0data counter is 65536 Note that ICCNT is a don"t care when RM is set to 1.

Copyright © 2025 Texas Instruments Incorporated

11.1.2.6.7 ICDRR Register (Offset = 18h) [Reset = 00000000h]

ICDRR is shown in Table 11-99.

Return to the Summary Table.

I2C Data Receive register

Table 11-99. ICDRR Register Field Descriptions

Bit	Field	Type	Reset	Description
31-8	NU	R/W	0h	Reserved
7-0	D7_D0	R/W	0h	Receive data

Copyright © 2025 Texas Instruments Incorporated

11.1.2.6.8 ICSAR Register (Offset = 1Ch) [Reset = 00000000h]

ICSAR is shown in Table 11-100.

Return to the Summary Table.

I2C Slave Address register

Table 11-100. ICSAR Register Field Descriptions

Bit	Field	Type	Reset	Description
31-10	NU	R/W	0h	Reserved
9-0	A9_A0	R/W	0h	Slave address. Use in both 7- and 10-bit address mode.

Copyright © 2025 Texas Instruments Incorporated

11.1.2.6.9 ICDXR Register (Offset = 20h) [Reset = 00000000h]

ICDXR is shown in Table 11-101.

Return to the Summary Table.

I2C Data Transmit register

Table 11-101. ICDXR Register Field Descriptions

Bit	Field	Type	Reset	Description
31-8	NU	R/W	0h	Reserved
7-0	D7_D0	R/W	0h	Transmit data

Copyright © 2025 Texas Instruments Incorporated

11.1.2.6.10 ICMDR Register (Offset = 24h) [Reset = 00000000h]

ICMDR is shown in Table 11-102.

Return to the Summary Table.

I2C Mode register

Table 11-102. ICMDR Register Field Descriptions

Bit	Field	Type	Reset	Description
31-16	NU2	R/W	0h	Reserved
15	NACKMOD	R/W	0h	No Acknowledge (NACK) mode. This bit is used to send an Acknowledge (ACK) or a No Acknowledge (NACK) to the transmitter. This bit is only applicable when the I2C is in receiver mode. In master receiver mode when the internal data count counter decrements to zero the I2C sends a NACK. The master receiver I2C finishes a transfer when it sends a NACK. The I2C ignores ICCNT when NACKMOD is '1'. The NACKMOD bit should be set before the rising edge of the last data bit (bit 8) if a NACK must be sent and this bit is cleared once a NACK has been sent. NACKMOD=0 the I2C sends an ACK to the transmitter during the acknowledge cycle. NACKMOD=1 the I2C sends a NACK to the transmitter during the acknowledge cycle.
14	FREE	R/W	0h	Free Running. This bit is used to determine the state of the I2C when a breakpoint is encountered in the HLL debugger. FREE= 0: (default) Stops immediately if SCL is low and keep driving SCL low whether I2C is master transmitter/receiver. If SCL is high I2C waits until SCL becomes low and then stops. If the I2C is a slave it will stop when the transmission/receiving completes. FREE= 1: The I2C runs free.
13	STT	R/W	0h	Start Condition (Master only mode). This bit can be set to a"1" by the CPU to generate a Start condition. In master mode when setting Start to"1" generates a Start condition. It is reset to "0" by the hardware after the Start condition has been generated. The Start/Stop bits can be configured to generate different transfer formats. Note that the STT and STP can be used to terminate the repeat mode. STT STP Conditions Bus Activities 1 0 Start S-A-D 0 1 Stop P 1 1 Start-Stop (ICCNT= n) S-A-D..(n)..D-P 1 0 Start (ICCNT= n) S-A-D..(n)..D
12	NU1	R/W	0h	Reserved for IDLEEN (IDLE Enable on 5509). - (RW)
11	STP	R/W	0h	Stop Condition (Master mode only). This bit can be set to a"1" by the CPU to generate a Stop condition. It is reset to "0" by the hardware after the Stop condition has been generated. The Stop condition is generated when ICCNT passes 0 when the I2C is in non-repeat mode(RM=0).

Copyright © 2025 Texas Instruments Incorporated

Table 11-102. ICMDR Register Field Descriptions (continued)

Bit	Field	Type	Reset	Description
10	MST	R/W	0h	Master. MST= 0: The I 2 C peripheral is in the"slave" mode and clock is received from the"master" device. MST= 1: The I 2 C peripheral is in the"master" mode and it generates the clock. This bit is clear when the transfer completed.
9	TRX	R/W	0h	Transmitter. TRX= 0: The I 2 C is in the"receiver" mode and data on data line SDA is shifted into the data register ICDRR. TRX= 1: The I 2 C is in the"transmitter" mode and the data in ICDXR is shifted out on data line SDA. The operating modes (not in FDF mode) are defined as follows. In FDF mode TRX must be configured even if the I2C is in slave mode because there is no address/direction byte in FDF mode. _____ MST___TRX___Operating Modes _0_____x_____"slave receiver" _0_____x_____"slave transmitter" _1_____0_____"master receiver" _1_____1_____"master transmitter" _____
8	XA	R/W	0h	Expanded Address. XA= 0: (default) 7-bit address mode (normal address mode). XA= 1: 10-bit address mode (expanded address mode) Please note that XA needs to be configured even if the I2C is in slave mode.
7	RM	R/W	0h	Repeat Mode. This bit is set to a"1" by the CPU to put the I2C in the repeat mode. In this mode data is continuously transmitted out of the ICDXR until the STP bit is set to"1" regardless of ICCNT value. This bit is don"t care if the I2C is configured in slave mode. _____ __ RM___STT___STP___Conditions_____Bus Activities_____Mode _0_____0_____0_____Idle_____None_____NA _0_____0_____1_____Stop_____P_____NA _0_____1_____0_____(Re)Start_____S-A-D..(n)..D____Repeat n _0_____1_____1_____(Re)Start-Stop___S-A-D..(n)..D-P__Repeat n _1_____0_____0_____Idle_____none_____NA _1_____0_____1_____Stop_____P _____NA _1_____1_____0_____(Re)Start_____S-A-D-D-D..____Continuous _1_____1_____1_____Reserved_____None_____NA _____ __
6	DLB	R/W	0h	Digital Loop Back (in master transmit mode only). This bit is set to a"1" by the CPU to put the I2C in the loop back mode. In this mode data transmitted out of the ICDXR will be received in the ICDRR after ((CPU freq/I2C freq)8) CPU cycles via an internal path. The address of the ICOAR is output on SDA.
5	IRS	R/W	0h	I2C Reset Not. This can be set to a"0" by the CPU to put the I2C in reset or to a"1" to take the I2C out of reset. When this bit is reset to 0 all status bits in ICSTR and ICIVR are set to default values. Note that if this bit is reset during a transfer it can cause the I2C bus hang (SDA and SCL are tri-stated).

Copyright © 2025 Texas Instruments Incorporated

Table 11-102. ICMDR Register Field Descriptions (continued)

Bit	Field	Type	Reset	Description
4	STB	R/W	0h	Start Byte (Master only mode). The Start Byte mode bit is set to 1 by the CPU to configure the I2C in Start byte mode the I2C sends "00000001" regardless ICSAR value. Refer to the Philip I2C spec for more details.
3	FDF	R/W	0h	Free Data Format. This bit can be set to"1" by the CPU to configure the I2C in Free Data Format mode. _____ FDF___MST___TRX_____Operating mode _0_____0_____ x____Slave in non FDF mode _0_____1_____0____Master receive in non FDF mode _0_____1_____1____Master transmit in non FDF mode _1_____0_____0____Slave receiver in FDF mode _1_____0_____1____Slave transmitter in FDF mode _1_____1_____0____Master receiver in FDF mode _1_____1_____1____Master transmitter in FDF mode _____
2-0	BC2_BC1_BC0	R/W	0h	Bit Count : Bit Count 2, Bit Count 1 and Bit Count 0 define the number of bits starting from the lsb (excluding the acknowledge bit) of the next byte which are yet to be received or transmitted. _____ BC2_BC1_BC0__Bits/byte in FDF__Bits/byte w/ ACK _0___0___1_____NA (reserved)____ NA (reserved) _0___1___0_____2_____3_____ _0___1___1_____3_____4_____ _1___0___0_____4_____5_____ _1___0___1_____5_____6_____ _1___1___0_____6_____7_____ _1___1___1_____7_____8_____ _0___0___0_____8_____9_____ _____

Copyright © 2025 Texas Instruments Incorporated

11.1.2.6.11 ICIVR Register (Offset = 28h) [Reset = 00000000h]

ICIVR is shown in Table 11-103.

Return to the Summary Table.

I2C Interrupt Vector register

Table 11-103. ICIVR Register Field Descriptions

Bit	Field	Type	Reset	Description
31-12	NU2	R/W	0h	Reserved.
11-8	TESTMD	R/W	0h	Reserved for internal testing.
7-3	NU1	R/W	0h	Reserved.
2-0	INTCODE	R/W	0h	Interrupt code. The binary-coded-interrupt vector indicates which interrupt has occurred. Reading the ICIVR clears the interrupt code except ARDY(011) RRDY(100) and XRDY(101). Interrupt code for ARDY RRDY and XRDY is cleared when ARDY ICRRDY and ICXRDY bits in the ICSTR is cleared to default value respectively. If other interrupts are pending a new interrupt is generated. If there are more than one interrupt flag reading the ICIVR clears the highest priority interrupt code. Reading the ICIVR also clears corresponding status bit in the ICSTR except ARDY ICRRDY ICXRDY and AAS. Note that users must read (clear) the ICIVR before doing another start otherwise the ICIVR could contain incorrect (old interrupt flags) value. _____ Interrupt Code_____Interrupt Occurred_____ _000_(default)_____None _001_(highest priority)____Arbitration Lost interrupt _010_____No Acknowledgement interrupt _011_____Register Access Ready interrupt _100_____Receive Data Ready interrupt _101_____Transmit Data Ready interrupt _110_____Stop Condition Detection _111_(lowest priority)_____Address As Slave - (RW) _____

Copyright © 2025 Texas Instruments Incorporated

11.1.2.6.12 ICEMDR Register (Offset = 2Ch) [Reset = 00000000h]

ICEMDR is shown in Table 11-104.

Return to the Summary Table.

I2C Extended Mode register

Table 11-104. ICEMDR Register Field Descriptions

Bit	Field	Type	Reset	Description
31-2	NU	R/W	0h	Reserved. - (RW)
1	IGNACK	R/W	0h	Ignore NACK mode IGNACK=0 The master transmitter will operate normally discontinue the data transfer and set the ARDY and NACK status bits when a NACK signal is received from the slave. IGNACK=1 The master transmitter will ignore a NACK received from the slave.
0	BCM	R/W	0h	Backward Compatibility Mode. This bit affects the I2C interrupt behavior. Refer to appendix A for details.

Copyright © 2025 Texas Instruments Incorporated

11.1.2.6.13 ICPSC Register (Offset = 30h) [Reset = 00000000h]

ICPSC is shown in Table 11-105.

Return to the Summary Table.

I2C Prescaler register

Table 11-105. ICPSC Register Field Descriptions

Bit	Field	Type	Reset	Description
31-8	NU	R/W	0h	Reserved.
7-0	IPSC7_IPSC0	R/W	0h	8-bit prescaler to divide the system clock down to 4/8/12Mhz clock and used by the I2C module. This register must be initialized while the I2C is still in reset (IRS_=0). The value takes effect on the rising edge of IRS_.

Copyright © 2025 Texas Instruments Incorporated

11.1.2.6.14 ICPID1 Register (Offset = 34h) [Reset = 00000000h]

ICPID1 is shown in Table 11-106.

Return to the Summary Table.

I2C Peripheral ID register 1

Table 11-106. ICPID1 Register Field Descriptions

Bit	Field	Type	Reset	Description
31-16	NU	R/W	0h	Reserved.
15-8	CLASS	R/W	0h	Identifies the class of peripheral. This value should be 0x 01 - (RW)
7-0	REVISION	R/W	0h	Identifies the revision level of the I2C. This value should be incremented each time the design is revised. - (RW)

Copyright © 2025 Texas Instruments Incorporated

11.1.2.6.15 ICPID2 Register (Offset = 38h) [Reset = 00000000h]

ICPID2 is shown in Table 11-107.

Return to the Summary Table.

I2C Peripheral ID register 2

Table 11-107. ICPID2 Register Field Descriptions

Bit	Field	Type	Reset	Description
31-8	NU	R/W	0h	Reserved.
7-0	TYPE	R/W	0h	Identifies the type of peripheral. This value should be 0x 05 - (RW)

Copyright © 2025 Texas Instruments Incorporated

11.1.2.6.16 ICDMAC Register (Offset = 3Ch) [Reset = 00000000h]

ICDMAC is shown in Table 11-108.

Return to the Summary Table.

I2C DMA Control Register

Table 11-108. ICDMAC Register Field Descriptions

Bit	Field	Type	Reset	Description
31-2	NU	R/W	0h	Reserved. - (RW)
1	TXDMAEN	R/W	0h	Transmit DMA enable. This bit controls the receive DMA event pin to the system. When this bit is 1 the DMA event is enabled and ICTEVT_POR pin is asserted when the DMA transfer is required. When this bit is 0 the ICTEVT_POR pin is never asserted. RXDMAEN= 0: DMA transmit event is disabled. RXDMAEN= 1: DMA transmit event is enabled. (Default)
0	RXDMAEN	R/W	0h	Receive DMA enable. This bit controls the receive DMA event pin to the system. When this bit is 1 the DMA event is enabled and ICREVT_POR pin is asserted when the DMA transfer is required. When this bit is 0 the ICREVT_POR pin is never asserted. RXDMAEN= 0: DMA receive event is disabled. RXDMAEN= 1: DMA receive event is enabled. (Default)

Copyright © 2025 Texas Instruments Incorporated

11.1.2.6.17 I2C_RESERVED1 Register (Offset = 40h) [Reset = 00000000h]

I2C_RESERVED1 is shown in Table 11-109.

Return to the Summary Table.

Reserved

Table 11-109. I2C_RESERVED1 Register Field Descriptions

Bit	Field	Type	Reset	Description
31-0	NU	R/W	0h	Reserved.

Copyright © 2025 Texas Instruments Incorporated

11.1.2.6.18 I2C_RESERVED2 Register (Offset = 44h) [Reset = 00000000h]

I2C_RESERVED2 is shown in Table 11-110.

Return to the Summary Table.

Reserved

Table 11-110. I2C_RESERVED2 Register Field Descriptions

Bit	Field	Type	Reset	Description
31-0	NU	R/W	0h	Reserved.

Copyright © 2025 Texas Instruments Incorporated

11.1.2.6.19 ICPFUNC Register (Offset = 48h) [Reset = 00000000h]

ICPFUNC is shown in Table 11-111.

Return to the Summary Table.

I2C Pin Function register

Table 11-111. ICPFUNC Register Field Descriptions

Bit	Field	Type	Reset	Description
31-1	NU	R/W	0h	Reserved.
0	PFUNC0	R/W	0h	Controls the function of the I2C SCL and SDA pins. 0 = Pins function as SCL and SDA 1 = Pins functions as GPIO Note: No hardware protection is required to disable I2C function when the PFUNC[0] and IRS_ bits are both set to one. When PFUNC[0] is"1" (GPIO mode) the sub-module which controls the I2C function receives the value"1" for SCL and SDA. IRS_ can be set to"1" regardless of PFUNC[0] and the I2C function works whenever the IRS_ bit is"1". The user is expected to hold I2C in reset via IRS_ bit when changing to/from GPIO mode via the PFUNC[0] bit.

Copyright © 2025 Texas Instruments Incorporated

11.1.2.6.20 ICPDIR Register (Offset = 4Ch) [Reset = 00000000h]

ICPDIR is shown in Table 11-112.

Return to the Summary Table.

I2C Pin Direction register

Table 11-112. ICPDIR Register Field Descriptions

Bit	Field	Type	Reset	Description
31-2	NU	R/W	0h	Reserved
1	PDIR1	R/W	0h	Controls the direction of the I2C SDA pin when configured as GPIO. 0 = SDA pin functions as input 1 = SDA pin functions as output
0	PDIR0	R/W	0h	Controls the direction of the I2C SCL pin when configured as GPIO. 0 = SCL pin functions as input 1 = SCL pin functions as output

Copyright © 2025 Texas Instruments Incorporated

11.1.2.6.21 ICPDIN Register (Offset = 50h) [Reset = 00000000h]

ICPDIN is shown in Table 11-113.

Return to the Summary Table.

I2C Pin Data In register

Table 11-113. ICPDIN Register Field Descriptions

Bit	Field	Type	Reset	Description
31-2	NU	R/W	0h	Reserved
1	PDIN1	R/W	0h	Indicates the logic level present on the SDA pin. Reads: 0 = Logic low present at SDA pin regardless of PFUNC setting. 1 = Logic high present at SDA pin regardless of PFUNC setting. Writes: Writes have no effect. - (RW)
0	PDIN0	R/W	0h	Indicates the logic level present on the SCL pin. Reads: 0 = Logic low present at SCL pin regardless of PFUNC setting. 1 = Logic high present at SCL pin regardless of PFUNC setting. Writes: Writes have no effect - (RW)

Copyright © 2025 Texas Instruments Incorporated

11.1.2.6.22 ICPDOUT Register (Offset = 54h) [Reset = 00000000h]

ICPDOUT is shown in Table 11-114.

Return to the Summary Table.

I2C Pin Data Out register

Table 11-114. ICPDOUT Register Field Descriptions

Bit	Field	Type	Reset	Description
31-2	NU	R/W	0h	Reserved
1	PDOUT1	R/W	0h	Controls the level driven on the SDA pin when configured as GPIO output. Reads: Reads return register values not GPIO pin levels. Writes: 0 = SDA pin driven low 1 = SDA pin driven high. Note: If SDA is connected to an open-drain buffer at the chiplevel the I2C cannot drive SDA to high.
0	PDOUT0	R/W	0h	Controls the level driven on the SCL pin when configured as GPIO output. Reads: Reads return register values not GPIO pin levels. Writes: 0 = SCL pin driven low 1 = SCL pin driven high Note: If SCL is connected to an open-drain buffer at the chiplevel the I2C cannot drive SCL to high.

Copyright © 2025 Texas Instruments Incorporated

11.1.2.6.23 ICPDSET Register (Offset = 58h) [Reset = 00000000h]

ICPDSET is shown in Table 11-115.

Return to the Summary Table.

I2C Pin Data Set register

Table 11-115. ICPDSET Register Field Descriptions

Bit	Field	Type	Reset	Description
31-2	NU	R/W	0h	Reserved
1	PDSET1	R/W	0h	Used to set PDOUT[1] bit which corresponds to the SDA GPIO pin. Reads: Reads should return 0. User documentation should say reads are indeterminate. Writes: 0 = no effect 1 = PDOUT[1] bit is set to logic high.
0	PDSET0	R/W	0h	Used to set PDOUT[0] bit which corresponds to the SCL GPIO pin. Reads: Reads should return 0. User documentation should say reads are indeterminate. Writes: 0 = no effect 1 = PDOUT[0] bit is set to logic high.

Copyright © 2025 Texas Instruments Incorporated

11.1.2.6.24 ICPDCLR Register (Offset = 5Ch) [Reset = 00000000h]

ICPDCLR is shown in Table 11-116.

Return to the Summary Table.

I2C Pin Data Clear register

Table 11-116. ICPDCLR Register Field Descriptions

Bit	Field	Type	Reset	Description
31-2	NU	R/W	0h	Reserved
1	PDCLR1	R/W	0h	Used to clear PDOUT[1] bit which corresponds to the SDA pin. Reads: Reads should return 0. User documentation should say reads are indeterminate. Writes: 0 = no effect 1 = PDOUT[1] bit is cleared to logic low.
0	PDCLR0	R/W	0h	Used to clear PDOUT[0] bit which corresponds to the SCL pin. Reads: Reads should return 0. User documentation should say reads are indeterminate. Writes: 0 = no effect 1 = PDOUT[0] bit is cleared to logic low.

Copyright © 2025 Texas Instruments Incorporated

11.1.2.6.25 ICPDRV Register (Offset = 60h) [Reset = 00000000h]

ICPDRV is shown in Table 11-117.

Return to the Summary Table.

I2C Pin Driver Mode Register

Table 11-117. ICPDRV Register Field Descriptions

Bit	Field	Type	Reset	Description
31-2	NU	R/W	0h	Reserved
1	PDRV1	R/W	0h	Used to select driver mode of output buffer for SDA pin. 0 = I2C mode. 1 = GPIO mode. Note: Value of this register is reflected on the PDRV_SDA_POR port. Actual function depends on I/O buffer and chip implementation.
0	PDRV0	R/W	0h	Used to select driver mode of output buffer for SCL pin. 0 = I2C mode. 1 = GPIO mode. Note: Value of this register is reflected on the PDRV_SCL_POR port. Actual function depends on I/O buffer and chip implementation.

Copyright © 2025 Texas Instruments Incorporated

11.1.2.7 Sample Waveforms

Figure 11-18 provides waveforms to illustrate the difference between normal operation and backward compatibility mode.

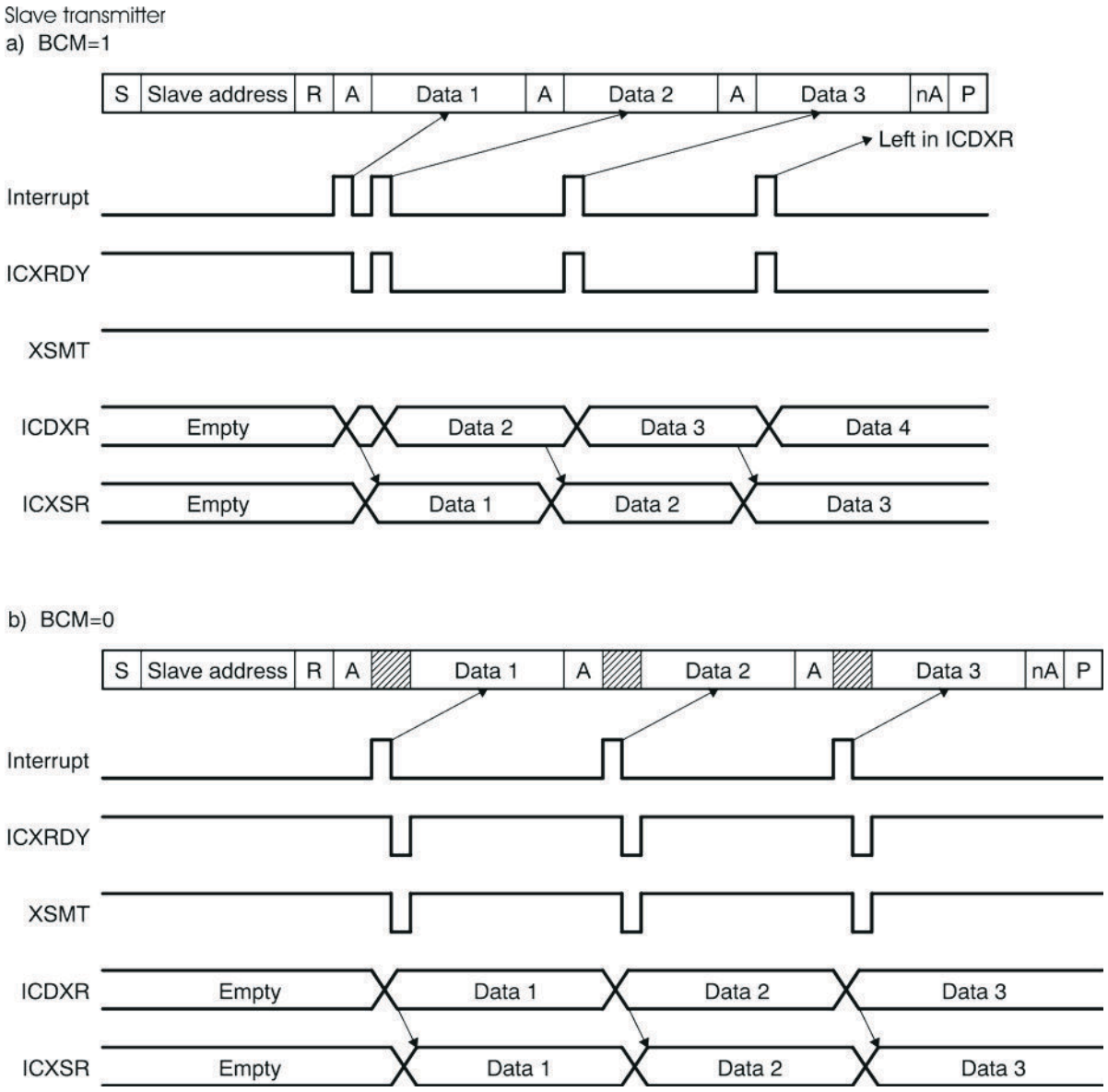

Figure 11-18. Difference between Normal Operation and Backward Compatibility Mode

11.1.3 UART/SCI

This chapter contains the description of the serial communication interface (SCI) module. The device contains 4 instances of UART:

- MSS_SCIA: Covered in MSS_SCI and DSS_SCI
- MSS_SCIB: Covered in MSS_SCI and DSS_SCI
- DSS_SCIA: Covered in MSS_SCI and DSS_SCI
- RCSS_SCI_A: Covered in RCSS SCI UART Overview

All 4 instances have a max VBUS speed of 200MHz and a max baud rate of 10MHz.

Copyright © 2025 Texas Instruments Incorporated

11.1.3.1 MSS_SCI and DSS_SCI

11.1.3.1.1 Introduction

The SCI module is a universal asynchronous receiver-transmitter that implements the standard nonreturn to zero format. The SCI can be used to communicate, for example, through an RS-232 port or over a K-line.

11.1.3.1.1.1 SCI Features

The following are the features of the SCI module:

- Standard universal asynchronous receiver-transmitter (UART) communication
- Supports full- or half-duplex operation
- Standard nonreturn to zero (NRZ) format
- Double-buffered receive and transmit functions
- Supports two individually enabled interrupt lines: level 0 and level 1
- Configurable frame format of 3 to 13 bits per character based on the following:
  - Data word length programmable from one to eight bits
  - Additional address bit in address-bit mode
  - Parity programmable for zero or one parity bit, odd or even parity
  - Stop programmable for one or two stop bits
- Asynchronous communication mode with no CLK pin
- Two multiprocessor communication formats allow communication between more than two devices
- Sleep mode is available to free CPU resources during multiprocessor communication and then wake up to receive an incoming message
- The 24-bit programmable baud rate supports 2^{24} different baud rates provide high accuracy baud rate selection
- Capability to use Direct Memory Access (DMA) for transmit and receive data
- Four error flags and Five status flags provide detailed information regarding SCI events
- Two external pins: SCIRX and SCITX

Note

SCI module does not support UART Hardware Flow Control. This feature can be implemented in Software using a General Purpose I/O pin.

11.1.3.1.1.2 Block Diagram

Three Major components of the SCI Module are:

- Transmitter
- Baud Clock Generator
- Receiver

Transmitter (TX) contains two major registers to perform double buffering:

- The transmitter data buffer register (SCITD) contains data loaded by the CPU to be transferred to the shift register for transmission.
- The transmitter shift register (SCITXSHF) loads data from the data buffer (SCITD) and shifts data onto the SCITX pin, one bit at a time.

Baud Clock Generator

- A programmable baud generator produces a baud clock scaled from VCLK.

Receiver (RX) contains two major registers to perform double buffering:

- The receiver shift register (SCIRXSHF) shifts data in from the SCIRX pin one bit at a time and transfers completed data into the receive data buffer.
- The receiver data buffer register (SCIRD) contains received data transferred from the receiver shift register

Copyright © 2025 Texas Instruments Incorporated

The SCI receiver and transmitter are double-buffered, and each has its own separate enable and interrupt bits. The receiver and transmitter can each be operated independently or simultaneously in full duplex mode.

To ensure data integrity, the SCI checks the data it receives for breaks, parity, overrun, and framing errors. The bit rate (baud) is programmable to over 16 million different rates through a 24-bit baud-select register. Figure 11-19 shows the detailed SCI block diagram.

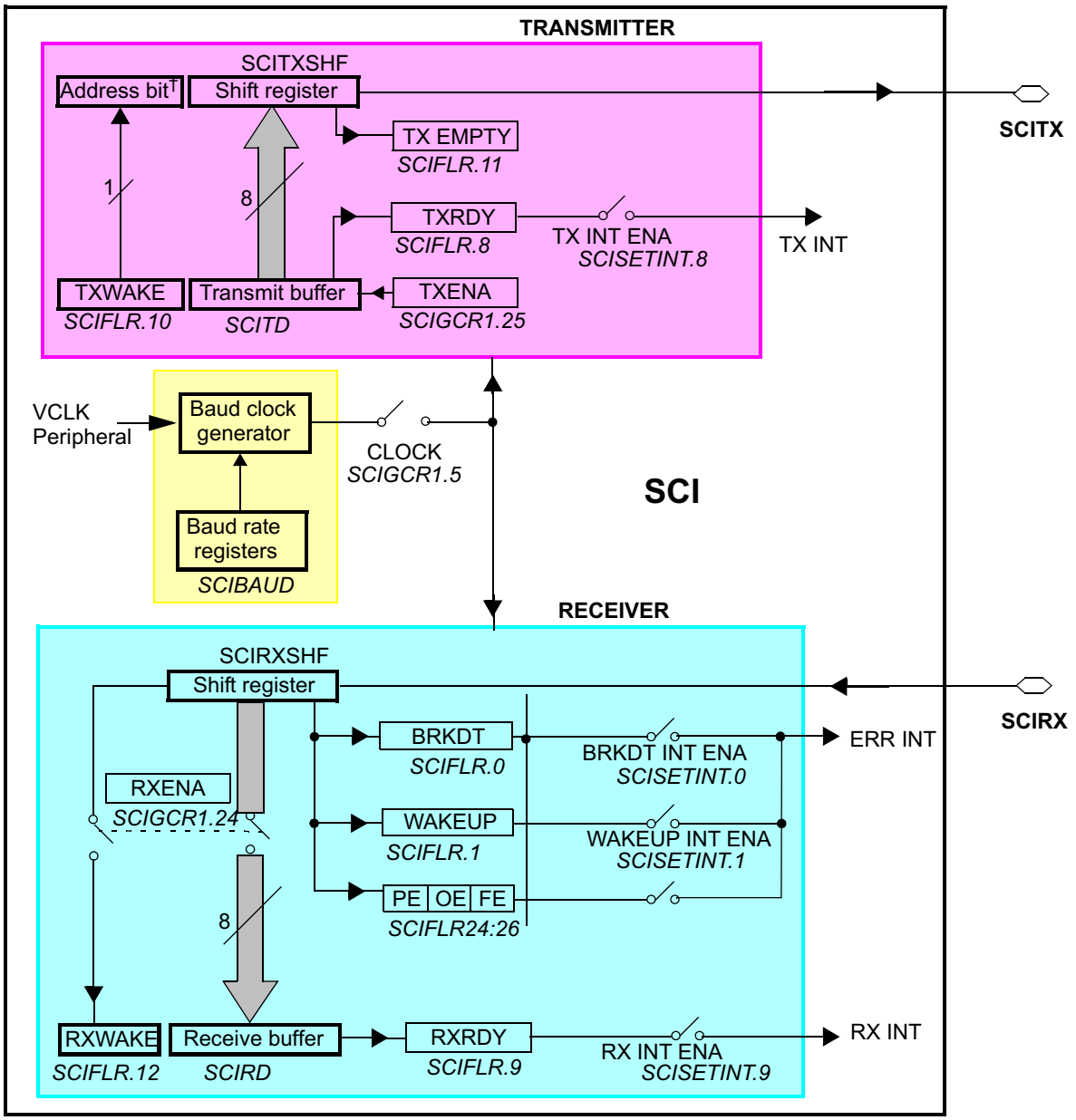

Figure 11-19. Detailed SCI Block Diagram

Note

UART Receiver and UART Transmitter pins attributes can be found in the AM273x Microcontroller data sheet

Copyright © 2025 Texas Instruments Incorporated

11.1.3.1.2 SCI Communication Formats

The SCI module can be configured to meet the requirements of many applications. Because communication formats vary depending on the specific application, many attributes of the SCI are user configurable. The list below describes these configuration options:

- SCI Frame format
- SCI Timing modes
- SCI Baud rate
- SCI Multiprocessor modes

11.1.3.1.2.1 SCI Frame Formats

The SCI uses a programmable frame format. All frames consist of the following:

- One start bit
- One to eight data bits
- Zero or one address bit
- Zero or one parity bit
- One or two stop bits

The frame format for both the transmitter and receiver is programmable through the bits in the SCIGCR1 register. Both receive and transmit data is in nonreturn to zero (NRZ) format, which means that the transmit and receive lines are at logic high when idle. Each frame transmission begins with a start bit, in which the transmitter pulls the SCI line low (logic low). Following the start bit, the frame data is sent and received least significant bit first (LSB).

An address bit is present in each frame if the SCI is configured to be in address-bit mode but is not present in any frame if the SCI is configured for idle-line mode. The format of frames with and without the address bit is illustrated in Figure 11-20.

A parity bit is present in every frame when the PARITY ENA bit is set. The value of the parity bit depends on the number of one bits in the frame and whether odd or even parity has been selected via the PARITY ENA bit. Both examples in Figure 11-20 have parity enabled.

All frames include one stop bit, which is always a high level. This high level at the end of each frame is used to indicate the end of a frame to ensure synchronization between communicating devices. Two stop bits are transmitted if the STOP bit in SCIGCR1 register is set. The examples shown in Figure 11-20 use one stop bit per frame.

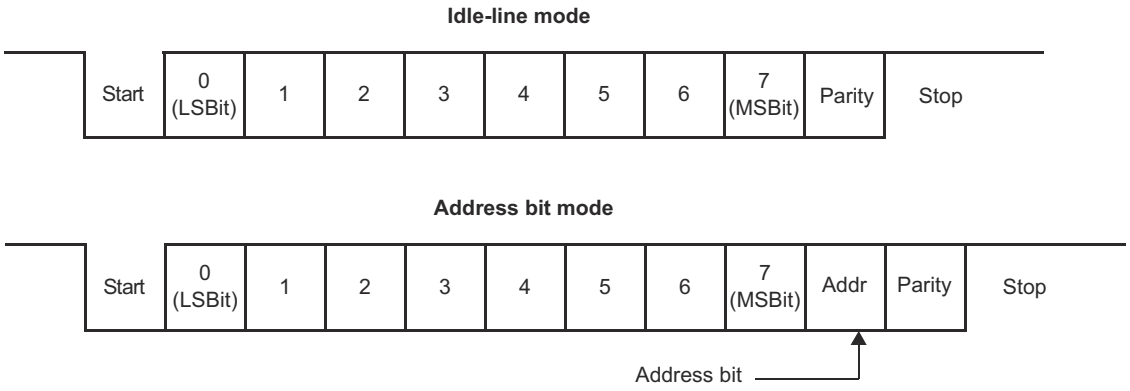

Figure 11-20. Typical SCI Data Frame Formats

11.1.3.1.2.2 SCI Timing Mode

The SCI can be configured to use asynchronous or isosynchronous timing using TIMING MODE bit in SCIGCR1 register.

Copyright © 2025 Texas Instruments Incorporated

11.1.3.1.2.2.1 Asynchronous Timing Mode

The asynchronous timing mode uses only the receive and transmit data lines to interface with devices using the standard universal asynchronous receiver- transmitter (UART) protocol.

In the asynchronous timing mode, each bit in a frame has a duration of 16 SCI baud clock periods. Each bit therefore consists of 16 samples (one for each clock period). When the SCI is using asynchronous mode, the baud rates of all communicating devices must match as closely as possible. Receive errors result from devices communicating at different baud rates.

With the receiver in the asynchronous timing mode, the SCI detects a valid start bit if the first four samples after a falling edge on the SCIRX pin are of logic level 0. As soon as a falling edge is detected on SCIRX, the SCI assumes that a frame is being received and synchronizes itself to the bus.

To prevent interpreting noise as Start bit SCI expects SCIRX line to be low for at least four contiguous SCI baud clock periods to detect a valid start bit. The bus is considered idle if this condition is not met. When a valid start bit is detected, the SCI determines the value of each bit by sampling the SCIRX line value during the seventh, eighth, and ninth SCI baud clock periods. A majority vote of these three samples is used to determine the value stored in the SCI receiver shift register. By sampling in the middle of the bit, the SCI reduces errors caused by propagation delays and rise and fall times and data line noises. Figure 11-21 illustrates how the receiver samples a start bit and a data bit in asynchronous timing mode.

The transmitter transmits each bit for a duration of 16 SCI baud clock periods. During the first clock period for a bit, the transmitter shifts the value of that bit onto the SCITX pin. The transmitter then holds the current bit value on SCITX for 16 SCI baud clock periods.

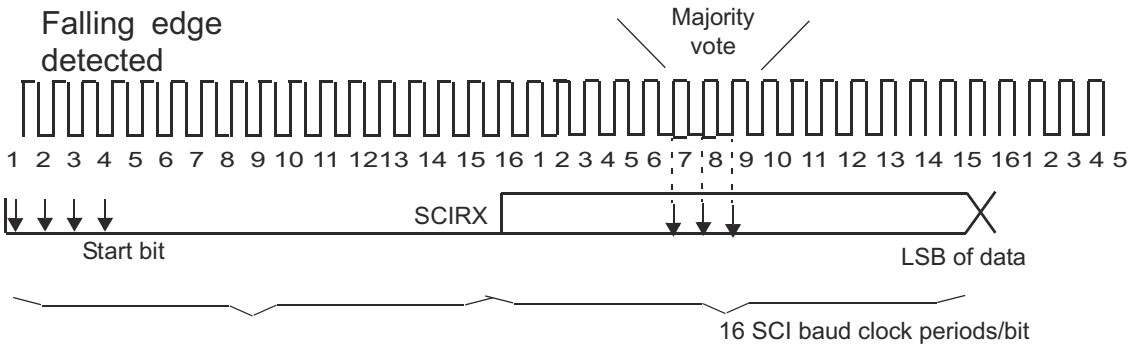

Figure 11-21. Asynchronous Communication Bit Timing

11.1.3.1.2.2.2 Isosynchronous Timing Mode

In isosynchronous timing mode, each bit in a frame has a duration of exactly 1 baud clock period and therefore consists of a single sample. With this timing configuration, the transmitter and receiver are required to make use of the SCICLK pin to synchronize communication with other SCI. **This mode is not fully supported on this device because SCICLK pin is not available.**

Copyright © 2025 Texas Instruments Incorporated

11.1.3.1.2.3 SCI Baud Rate

The SCI has an internally generated serial clock determined by the peripheral VCLK and the prescalers BAUD. The SCI uses the 24-bit integer prescaler BAUD value of the BRS register to select the required baud rates.

In asynchronous timing mode, the SCI generates a baud clock according to the following formula:

$$\textit{Asynchronous baud value} = \frac{\text{VCLK Frequency}}{16 * (\text{BAUD} + 1)}$$

For BAUD = 0,

$$\textit{Asynchronous baud value} = \frac{\text{VCLK Frequency}}{32} \quad (7)$$

In isosynchronous timing mode, the SCI generates a baud clock according to the following formula:

$$\textit{Isosynchronous baud value} = \frac{\text{VCLK Frequency}}{\text{BAUD} + 1}$$

For BAUD = 0,

$$\textit{Isosynchronous baud value} = \frac{\text{VCLK Frequency}}{32} \quad (8)$$

11.1.3.1.2.4 SCI Multiprocessor Communication Modes

In some applications, the SCI may be connected to more than one serial communication device. In such a multiprocessor configuration, several frames of data may be sent to all connected devices or to an individual device. In the case of data sent to an individual device, the receiving devices must determine when they are being addressed. When a message is not intended for them, the devices can ignore the following data. When only two devices make up the SCI network, addressing is not needed, so multiprocessor communication schemes are not required.

SCI supports two multiprocessor Communication Modes which can be selected using COMM MODE bit:

- Idle-Line Mode
- Address Bit Mode

When the SCI is not used in a multiprocessor environment, software can consider all frames as data frames. In this case, the only distinction between the idle-line and address-bit modes is the presence of an extra bit (the address bit) in each frame sent with the address-bit protocol.

The SCI allows full-duplex communication where data can be sent and received via the transmit and receive pins simultaneously. However, the protocol used by the SCI assumes that only one device transmits data on the same bus line at any one time. No arbitration is done by the SCI.

Note

Avoid Transmitting Simultaneously on the Same Serial Bus

The system designer must ensure that devices connected to the same serial bus line do not attempt to transmit simultaneously. If two devices are transmitting different data, the resulting bus conflict could damage the device..

Copyright © 2025 Texas Instruments Incorporated

11.1.3.1.2.4.1 Idle-Line Multiprocessor Modes

In idle-line multiprocessor mode, a frame that is preceded by an idle period (10 or more idle bits) is an address frame. A frame that is preceded by fewer than 10 idle bits is a data frame. Figure 11-22 illustrates the format of several blocks and frames with idle-line mode.

There are two ways to transmit an address frame using idle-line mode:

Method 1: In software, deliberately leave an idle period between the transmission of the last data frame of the previous block and the address frame of the new block.

Method 2: Configure the SCI to automatically send an idle period between the last data frame of the previous block and the address frame of the new block.

Although Method 1 is only accomplished by a delay loop in software, Method 2 can be implemented by using the transmit buffer and the TXWAKE bit in the following manner:

Step 1 : Write a 1 to the TXWAKE bit.

Step 2 : Write a dummy data value to the SCITD register. This triggers the SCI to begin the idle period as soon as the transmitter shift register is empty.

Step 3 : Wait for the SCI to clear the TXWAKE flag.

Step 4 : Write the address value to SCITD.

As indicated by Step 3, software should wait for the SCI to clear the TXWAKE bit. However, the SCI clears the TXWAKE bit at the same time it sets TXRDY (that is, transfers data from SCITD into SCITXSHF). Therefore, if the TX INT ENA bit is set, the transfer of data from SCITD to SCITXSHF causes an interrupt to be generated at the same time that the SCI clears the TXWAKE bit. If this interrupt method is used, software is not required to poll the TXWAKE bit waiting for the SCI to clear it.

When idle-line multiprocessor communications are used, software must ensure that the idle time exceeds 10 bit periods before addresses (using one of the methods mentioned above), and software must also ensure that data frames are written to the transmitter quickly enough to be sent without a delay of 10 bit periods between frames. Failure to comply with these conditions will result in data interpretation errors by other devices receiving the transmission.

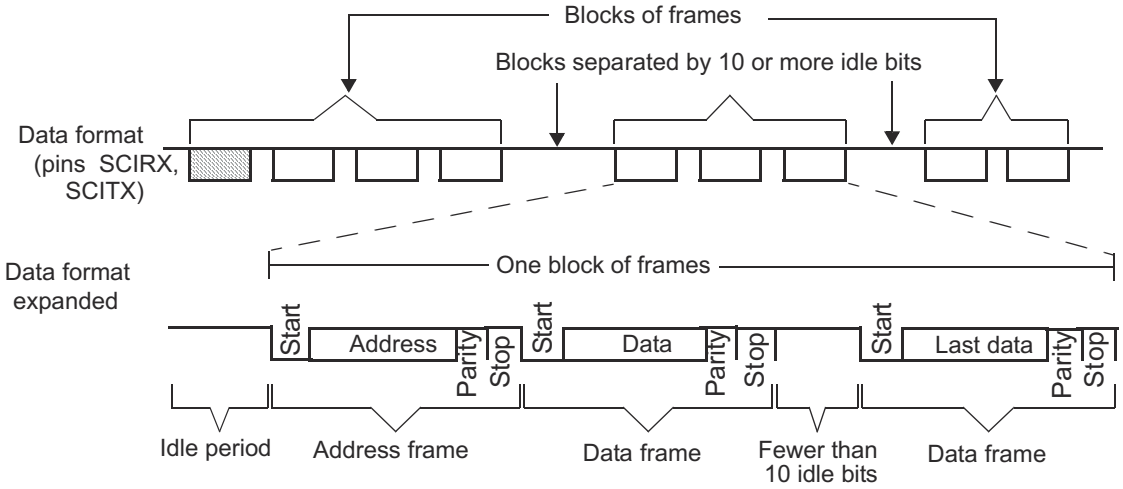

Figure 11-22. Idle-Line Multiprocessor Communication Format

Copyright © 2025 Texas Instruments Incorporated

11.1.3.1.2.4.2 Address-Bit Multiprocessor Mode

In the address-bit protocol, each frame has an extra bit immediately following the data field called an address bit. A frame with the address bit set to 1 is an address frame; a frame with the address bit set to 0 is a data frame. The idle period timing is irrelevant in this mode. Figure 11-23 illustrates the format of several blocks and frames with the address-bit mode.

When address-bit mode is used, the value of the TXWAKE bit is the value sent as the address bit. To send an address frame, software must set the TXWAKE bit. This bit is cleared as the contents of the SCITD are shifted from the TXWAKE register so that all frames sent are data except when the TXWAKE bit is written as a 1.

No dummy write to SCITD is required before an address frame is sent in address-bit mode. The first byte written to SCITD after the TXWAKE bit is written to 1 is transmitted with the address bit set when address-bit mode is used.

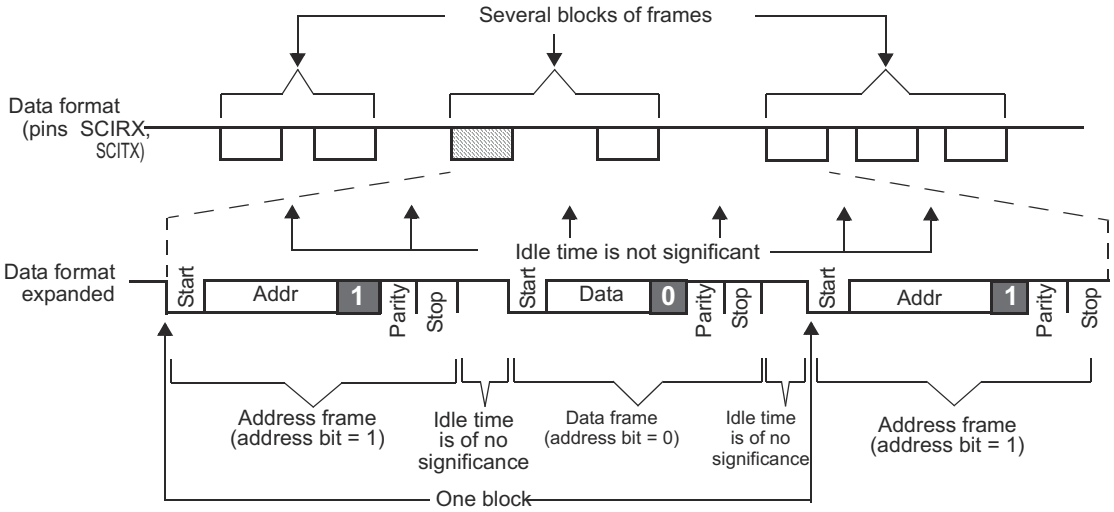

Figure 11-23. Address-Bit Multiprocessor Communication Format

Copyright © 2025 Texas Instruments Incorporated

11.1.3.1.3 SCI Interrupts

The SCI module has two interrupt lines, level 0 and level 1, to the interrupt manager (NVIC/IM) module (see Figure 11-24). Two offset registers SCIINTVECT0 and SCIINTVECT1 determine which flag triggered the interrupt according to the respective priority encoders. Each interrupt condition has a bit to enable and disable the interrupt in the SCISETINT and SCICLRINT registers, respectively.

Each interrupt also has a bit that can be set as interrupt level 0 (INT0) or as interrupt level 1 (INT1). By default, interrupts are in interrupt level 0. SCISETINTLVL sets a given interrupt to level1. SCICLEARINTLVL resets a given interrupt level to the default level 0.

The interrupt vector registers SCIINTVECT0 and SCIINTVECT1 return the vector of the pending interrupt line INT0 or INT1. If more than one interrupt is pending, the interrupt vector register holds the highest priority interrupt.

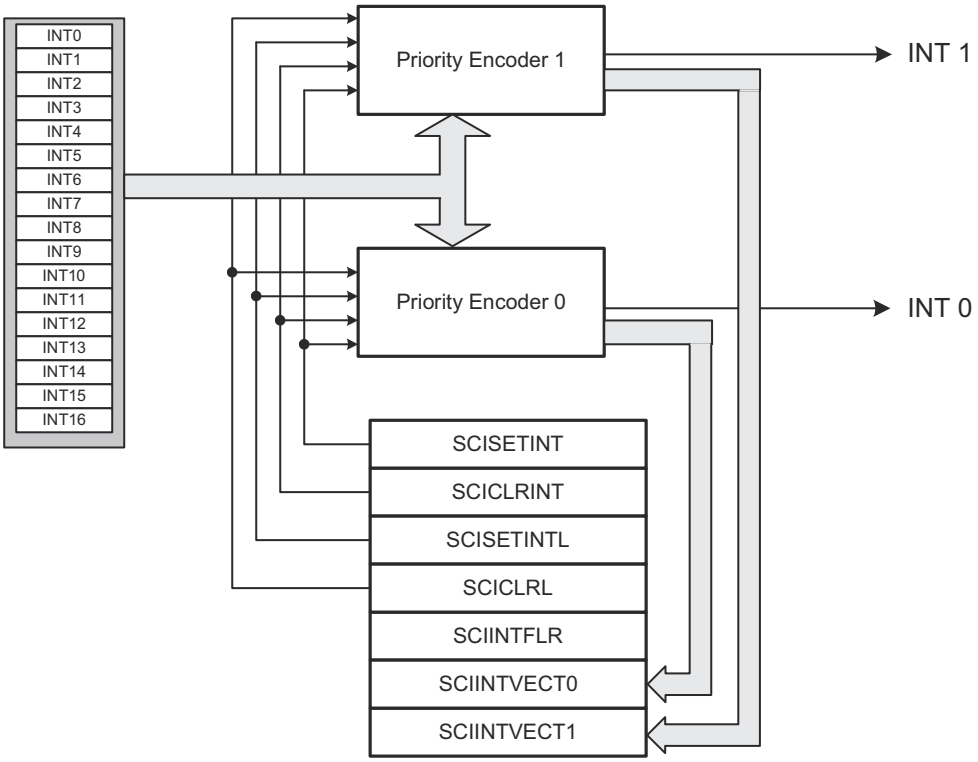

Figure 11-24. General Interrupt Scheme

Copyright © 2025 Texas Instruments Incorporated

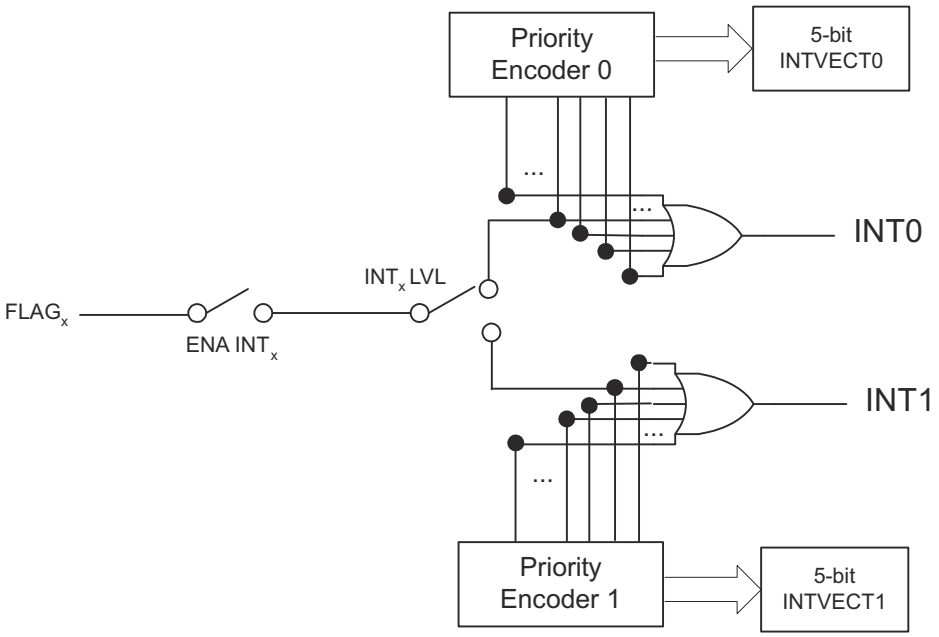

Figure 11-25. Interrupt Generation for Given Flags

11.1.3.1.3.1 Transmit Interrupt

To use transmit interrupt functionality, SET TX INT bit must be enabled and SET TX DMA bit must be cleared. The transmit ready (TXRDY) flag is set when the SCI transfers the contents of SCITD to the shift register, SCITXSHF. The TXRDY flag indicates that SCITD is ready to be loaded with more data. In addition, the SCI sets the TX EMPTY bit if both the SCITD and SCITXSHF registers are empty. If the SET TX INT bit is set, then a transmit interrupt is generated when the TXRDY flag goes high. Transmit Interrupt is not generated immediately after setting the SET TX INT bit unlike transmit DMA request. Transmit Interrupt is generated only after the first transfer from SCITD to SCITXSHF, that is first data has to be written to SCITD by the User before any interrupt gets generated. To transmit further data the user can write data to SCITD in the transmit Interrupt service routine.

Writing data to the SCITD register clears the TXRDY bit. When this data has been moved to the SCITXSHF register, the TXRDY bit is set again. The interrupt request can be suspended by setting the CLR TX INT bit; however, when the SET TX INT bit is again set to 1, the TXRDY interrupt is asserted again. The transmit interrupt request can be eliminated until the next series of values is written to SCITD, by disabling the transmitter via the TXENA bit, by a software reset SWnRST, or by a device hardware reset.

11.1.3.1.3.2 Receive Interrupt

The receive ready (RXRDY) flag is set when the SCI transfers newly received data from SCIRXSHF to SCIRD. The RXRDY flag therefore indicates that the SCI has new data to be read. Receive interrupts are enabled by the SET RX INT bit. If the SET RX INT is set when the SCI sets the RXRDY flag, then a receive interrupt is generated. The received data can be read in the Interrupt Service routine.

On a device with both SCI and a DMA controller, the bits SET RX DMA ALL and SET RX DMA must be cleared to select interrupt functionality.

11.1.3.1.3.3 WakeUp Interrupt

SCI sets the WAKEUP flag if bus activity on the RX line either prevents power-down mode from being entered, or RX line activity causes an exit from power-down mode. If enabled (SET WAKEUP INT), wakeup interrupt is triggered once WAKEUP flag is set.

11.1.3.1.3.4 Error Interrupts

The following error detection features are supported with Interrupt by the SCI module:

Copyright © 2025 Texas Instruments Incorporated

- Parity errors (PE)
- Frame errors (FE)
- Break Detect errors (BRKDT)
- Overrun errors (OE)

If any of these errors (PE, FE, BRKDT, OE) is flagged, an interrupt for the flagged errors will be generated if enabled. A message is valid for both the transmitter and the receiver if there is no error detected until the end of the frame. Each of these flags is located in the receiver status (SCIFLR) register. Further details on these flags are explained in SCIFLR register description.

The SCI module supports the following 7 interrupts as listed in Table 11-118.

Table 11-118. SCI Interrupts

Offset (1)	Interrupt
0	Reserved
1	Wakeup
2	Reserved
3	Parity error
4	Reserved
5	Reserved
6	Frame error
7	Break detect error
8	Reserved
9	Overrun error
10	Reserved
11	Receive
12	Transmit
13-15	Reserved

(1) Offset 1 is the highest priority. Offset 16 is the lowest priority.

Copyright © 2025 Texas Instruments Incorporated

11.1.3.1.4 SCI DMA Interface

DMA requests for receive (RXDMA request) and transmit (TXDMA request) are available for the SCI module. Refer to the DMA module chapter for DMA module configurations.

11.1.3.1.4.1 Receive DMA Requests

This DMA functionality is enabled/disabled by the CPU using the SET RX DMA/CLR RX DMA bits, respectively.

The receiver DMA request is set when a frame is received successfully and DMA functionality has been previously enabled. The RXRDY flag is set when the SCI transfers newly received data from the SCIRXSHF register to the SCIRD buffer. The RXRDY flag therefore indicates that the SCI has new data to be read. Receive DMA requests are enabled by the SET RX INT bit.

Parity, overrun, break detect, wakeup, and framing errors generate an error interrupt request immediately upon detection, if enabled, even if the device is in the process of a DMA data transfer. The DMA transfer is postponed until the error interrupt is served. The error interrupt can delete this particular DMA request by reading the receive buffer.

In multiprocessor mode, the SCI can generate receiver interrupts for address frames and DMA requests for data frames. This is controlled by an extra select bit SET RX DMA ALL.

If the SET RX DMA ALL bit is set and the SET RX DMA bit is set when the SCI sets the RXRDY flag, then a receive DMA request is generated for address and data frames.

If the SET RX DMA ALL bit is cleared and the SET RX DMA bit is set when the SCI sets the RXRDY flag upon receipt of a data frame, then a receive DMA request is generated. Receive interrupt requests are generated for address frames.

In multiprocessor mode with the SLEEP bit set, no DMA is generated for received data frames. The software must clear the SLEEP bit before data frames can be received. Table 11-119 specifies the bit values for DMA requests in multiprocessor modes.

Table 11-119. DMA and Interrupt Requests in Multiprocessor Modes

SET RX INT	SET RX DMA	SET RX DMA ALL	ADDR FRAME INT	ADDR FRAME DMA	DATA FRAME INT	DATA FRAME DMA
0	0	x	N	N	N	N
0	1	0	Y	N	N	Y
0	1	1	N	Y	N	Y
1	0	x	Y	N	Y	N
1	1	0	Y	N	Y	Y
1	1	1	Y	Y	Y	Y

In multiprocessor mode, the SCI can generate receiver interrupts for address frames and DMA requests for data frames or DMA requests for both. This is controlled by the SET RX DMA ALL bit.

In multiprocessor mode with the SLEEP bit set, no DMA is generated for received data frames. The software must clear the SLEEP bit before data frames can be received.

11.1.3.1.4.2 Transmit DMA Requests

DMA functionality is enabled and disabled by the CPU with the SET TX DMA and CLR TX DMA bits, respectively.

The TXRDY flag is set when the SCI transfers the contents of SCITD to SCITXSHF. The TXRDY flag indicates that SCITD is ready to be loaded with more data. In addition, the SCI sets the TX EMPTY bit if both the SCITD and SCITXSHF registers are empty.

Copyright © 2025 Texas Instruments Incorporated

Transmit DMA requests are enabled by the setting SET TX DMA and SET TX INT bits. If the SET TX DMA bit is set, then a TX DMA request is sent to the DMA when data is written to SCITD and TXRDY is set. The DMA will write the first byte to the transmit buffer.

Copyright © 2025 Texas Instruments Incorporated

11.1.3.1.5 SCI Configurations

Before the SCI sends or receives data, its registers should be properly configured. Upon power-up or a system-level reset, each bit in the SCI registers is set to a default state. The registers are writable only after the RESET bit in the SCIGCR0 register is set to 1. Of particular importance is the SWnRST bit in the SCIGCR1 register. The SWnRST is an active-low bit initialized to 0 and keeps the SCI in a reset state until it is programmed to 1. Therefore, all SCI configuration should be completed before a 1 is written to the SWnRST bit.

The following list details the configuration steps that software should perform prior to the transmission or reception of data. As long as the SWnRST bit is cleared to 0 the entire time that the SCI is being configured, the order in which the registers are programmed is not important.

- Enable SCI by setting the RESET bit to 1.
- Clear the SWnRST bit to 0 before SCI is configured.
- Select the desired frame format by programming the SCIGCR1 register.
- Set both the RX FUNC and TX FUNC bits in SCIPIO0 to 1 to configure the SCIRX and SCITX pins for SCI functionality.
- Select the baud rate to be used for communication by programming the BRS register.
- Set the CLOCK bit in SCIGCR1 to 1 to select the internal clock.
- Set the CONT bit in SCIGCR1 to 1 to make SCI not halt for an emulation breakpoint until its current reception or transmission is complete (this bit is used only in an emulation environment).
- Set LOOP BACK bit in SCIGCR1 to 1 to connect the transmitter to the receiver internally (this feature is used to perform a self-test).
- Set the RXENA bit in SCIGCR1 to 1, if data is to be received.
- Set the TXENA bitin SCIGCR1 to 1, if data is to be transmitted.
- Set the SWnRST bit to 1 after SCI is configured.
- Perform receiving or transmitting data (see Section 11.1.3.1.5.1 and Section 11.1.3.1.5.2).

11.1.3.1.5.1 Receiving Data

The SCI receiver is enabled to receive messages if both the RX FUNC bit and the RXENA bit are set to 1. If the RX FUNC bit is not set, the SCIRX pin functions as a general-purpose I/O pin rather than as an SCI function pin. After a valid idle period is detected, data is automatically received as it arrives on the SCIRX pin.

SCI sets the RXRDY bit when it transfers newly received data from SCIRXSHF to SCIRD. The SCI clears the RXRDY bit after the new data in SCIRD has been read. Also, as data is transferred from SCIRXSHF to SCIRD, the SCI sets the FE, OE, or PE flags if any of these error conditions were detected in the received data. These error conditions are supported with configurable interrupt capability. The wakeup and break-detect status bits are also set if one of these errors occurs, but they do not necessarily occur at the same time that new data is being loaded into SCIRD.

You can receive data by:

1. Polling Receive Ready Flag
2. Receive Interrupt
3. DMA

In polling method, software can poll for the RXRDY bit and read the data from SCIRD register once RXRDY is set high. The CPU is unnecessarily overloaded by selecting the polling method. To avoid this, you can use either the interrupt or DMA method. To use the interrupt method, the SET RX INT bit is set. To use the DMA method, the SET RX DMA bit is set. Either an interrupt or a DMA request is generated the moment the RXRDY bit is set.

Copyright © 2025 Texas Instruments Incorporated

11.1.3.1.5.2 Transmitting Data

The SCI transmitter is enabled if both the TX FUNC bit and the TXENA bit are set to 1. If the TX FUNC bit is not set, the SCITX pin functions as a general-purpose I/O pin rather than as an SCI function pin. Any value written to the SCITD before TXENA is set to 1 is not transmitted. Both of these control bits allow for the SCI transmitter to be held inactive independently of the receiver.

SCI waits for data to be written to SCITD, transfers it to SCITXSHF, and transmits the data. The TXRDY and TX EMPTY bits indicate the status of the transmit buffers. That is, when the transmitter is ready for data to be written to SCITD, the TXRDY bit is set. Additionally, if both SCITD and SCITXSHF are empty, then the TX EMPTY bit is also set.

You can transmit data by:

1. Polling Transmit Ready Flag
2. Transmit Interrupt
3. DMA

In polling method, software can poll for the TXRDY bit to go high before writing the data to the SCITD register. The CPU is unnecessarily overloaded by selecting the polling method. To avoid this, you can use either the interrupt or DMA method. To use the interrupt method, the SET TX INT bit is set. To use the DMA method, the SET TX DMA bit is set. Either an interrupt or a DMA request is generated the moment the TXRDY bit is set. When the SCI has completed transmission of all pending frames, the SCITXSHF register and SCITD are empty, the TXRDY bit is set, and an interrupt/DMA request is generated, if enabled. Because all data has been transmitted, the interrupt/DMA request should be halted. This can either be done by disabling the transmit interrupt (CLR TX INT) / DMA request (CLR TX DMA bit) or by disabling the transmitter (clear TXENA bit).

Note

The TXRDY flag cannot be cleared by reading the corresponding interrupt offset in the SCIINTVECT0 or SCIINTVECT1 register.

Copyright © 2025 Texas Instruments Incorporated

11.1.3.1.6 MSS_SCI Registers

Table 11-120 lists the memory-mapped registers for the MSS_SCI registers. All register offset addresses not listed in Table 11-120 should be considered as reserved locations and the register contents should not be modified.

Table 11-120. MSS_SCI Registers

Offset	Acronym	Register Name	Section
0h	SCIGCR0	The SCIGCR0 register defines the module reset	Go
4h	SCIGCR1	The SCIGCR1 register defines the frame format, protocol, and communication mode used by the SCI	Go
8h	RESERVED1	Reserved	Go
Ch	SCISETINT	SCI Set Interrupt Register	Go
10h	SCICLEARINT	SCI Clear Interrupt Register	Go
14h	SCISETINTLVL	SCI Set Interrupt Level Register	Go
18h	SCICLEARINTLVL	SCI Clear Interrupt Level Register	Go
1Ch	SCIFLR	SCI Flags Register	Go
20h	SCIINTVECT0	SCI Interrupt Offset Vector 0 Register	Go
24h	SCIINTVECT1	SCI Interrupt Offset Vector 1 Register	Go
28h	SCICHAR	SCI Character Control Register	Go
2Ch	SCIBAUD	SCI Baud Rate Selection Register	Go
30h	SCIED	Receiver Emulation Data Buffer	Go
34h	SCIRD	Receiver Data Buffer	Go
38h	SCITD	Transmit Data Buffer Register	Go
3Ch	SCIPIO0	SCI Pin I/O Control Register 0	Go
40h	SCIPIO1	SCI Pin I/O Control Register 1	Go
44h	SCIPIO2	SCI Pin I/O Control Register 2	Go
48h	SCIPIO3	SCI Pin I/O Control Register 3	Go
4Ch	SCIPIO4	SCI Pin I/O Control Register 4	Go
50h	SCIPIO5	SCI Pin I/O Control Register 5	Go
54h	SCIPIO6	SCI Pin I/O Control Register 6	Go
58h	SCIPIO7	SCI Pin I/O Control Register 7	Go
5Ch	SCIPIO8	SCI Pin I/O Control Register 8	Go
60h	RESERVED2	Reserved	Go
64h	RESERVED3	Reserved	Go
68h	RESERVED4	Reserved	Go
6Ch	RESERVED5	Reserved	Go
70h	RESERVED6	Reserved	Go
74h	RESERVED7	Reserved	Go
78h	RESERVED8	Reserved	Go
7Ch	RESERVED9	Reserved	Go
80h	SCIPIO9	SCI Pin I/O Control Register 9	Go
90h	SCIIODCTRL	SCI IO DFT Control	Go

Complex bit access types are encoded to fit into small table cells. Table 11-121 shows the codes that are used for access types in this section.

Table 11-121. MSS_SCI Access Type Codes

Access Type	Code	Description
Read Type		

Copyright © 2025 Texas Instruments Incorporated

Table 11-121. MSS_SCI Access Type Codes (continued)

Access Type	Code	Description
R	R	Read
Write Type		
W	W	Write
Reset or Default Value		
-n		Value after reset or the default value

Copyright © 2025 Texas Instruments Incorporated

11.1.3.1.6.1 SCIGCR0 Register (Offset = 0h) [Reset = 00000000h]

SCIGCR0 is shown in Table 11-122.

Return to the Summary Table.

The SCIGCR0 register defines the module reset

Table 11-122. SCIGCR0 Register Field Descriptions

Bit	Field	Type	Reset	Description
31-1	RESERVED	R	0h	Reserved
0	RESET	R/W	0h	GIO reset

Copyright © 2025 Texas Instruments Incorporated

11.1.3.1.6.2 SCIGCR1 Register (Offset = 4h) [Reset = 00000000h]

SCIGCR1 is shown in Table 11-123.

Return to the Summary Table.

The SCIGCR1 register defines the frame format, protocol, and communication mode used by the SCI

Table 11-123. SCIGCR1 Register Field Descriptions

Bit	Field	Type	Reset	Description
31-26	RESERVED	R	0h	Reserved
25	TXENA	R/W	0h	Data is transferred from SCITD to SCITXSHF only when the TXENA bit is set
24	RXENA	R/W	0h	Allows the receiver to transfer data from the shift buffer to the receive buffer
23-18	RESERVED	R	0h	Reserved
17	CONT	R/W	0h	This bit has an effect only when a program is being debugged with an emulator, and it determines how the SCI operates when the program is suspended
16	LOOP_BACK	R/W	0h	Enable bit for loopback mode
15-10	RESERVED	R	0h	Reserved
9	POWERDOWN	R/W	0h	When the POWERDOWN bit is set, the SCI attempts to enter local low-power mode
8	SLEEP	R/W	0h	In a multiprocessor configuration, this bit controls the receive sleep function. Clearing this bit brings the SCI out of sleep mode
7	SW_nRESET	R/W	0h	Software reset (active low)
6	RESERVED	R	0h	Reserved
5	CLOCK	R/W	0h	SCI internal clock enable
4	STOP	R/W	0h	SCI number of stop bits
3	PARITY	R/W	0h	SCI parity odd/even selection
2	PARITY_ENA	R/W	0h	SCI parity enable
1	TIMING_MODE	R/W	0h	SCI timing mode bit (0=Isosynchronous timing, 1=Asynchronous timing)
0	COMM_MODE	R/W	0h	SCI communication mode bit (0=Idle-line mode, 1=Address-bit mode)

Copyright © 2025 Texas Instruments Incorporated

11.1.3.1.6.3 RESERVED1 Register (Offset = 8h) [Reset = 00000000h]

RESERVED1 is shown in Table 11-124.

Return to the Summary Table.

Reserved

Table 11-124. RESERVED1 Register Field Descriptions

Bit	Field	Type	Reset	Description
31-0	RESERVED	R	0h	Reserved

Copyright © 2025 Texas Instruments Incorporated

11.1.3.1.6.4 SCISETINT Register (Offset = Ch) [Reset = 00000000h]

SCISETINT is shown in Table 11-125.

Return to the Summary Table.

SCI Set Interrupt Register

Table 11-125. SCISETINT Register Field Descriptions

Bit	Field	Type	Reset	Description
31-27	RESERVED	R	0h	Reserved
26	SET_FE_INT	R/W	0h	Set Framing-Error Interrupt User and privilege mode (read): 0 = Interrupt is disabled 1 = Interrupt is enabled User and privilege mode (write): 0 = leaves the corresponding bit unchanged 1 = enable interrupt
25	SET_OE_INT	R/W	0h	Set Overrun-Error Interrupt User and privilege mode (read): 0 = Interrupt is disabled 1 = Interrupt is enabled User and privilege mode (write): 0 = leaves the corresponding bit unchanged 1 = enable interrupt
24	SET_PE_INT	R/W	0h	Set Parity Interrupt User and privilege mode (read): 0 = Interrupt is disabled 1 = Interrupt is enabled User and privilege mode (write): 0 = leaves the corresponding bit unchanged 1 = enable interrupt
23-19	RESERVED	R	0h	Reserved
18	SET_RX_DMA_ALL	R/W	0h	Determines if a separate interrupt is generated for the address frames sent in multiprocessor communications User and privilege mode (read): 0 = DMA request is disabled for address frames (RX interrupt request is enabled for address frames) 1 = DMA request is enabled for address and data frames User and privilege mode (write): 0 = leaves the corresponding bit unchanged 1 = enable DMA request for address and data frames
17	SET_RX_DMA	R/W	0h	To select receiver DMA requests, this bit must be set. If it is cleared, interrupt requests are generated depending on bit SCISETINT.9 User and privilege mode (read): 0 = DMA request is disabled 1 = DMA request is enabled Privilege mode (write): 0 = leaves the corresponding bit unchanged 1 = enable DMA request
16	SET_TX_DMA	R/W	0h	To select DMA requests for the transmitter, this bit must be set. If it is cleared, interrupt requests are generated depending on SET TX INT bit (SCISETINT.8) User and privilege mode (read): 0 = TX interrupt request selected 1 = TX DMA request selected User and privilege mode (write): 0 = leaves the corresponding bit unchanged 1 = enable interrupt
15-10	RESERVED	R	0h	Reserved
9	SET_RX_INT	R/W	0h	Receiver interrupt enable:Setting this bit enables the SCI to generate a receive interrupt after a frame has been completely received and the data is being transferred from SCIRXSHF to SCIRD. User and privilege mode (read): 0 = Interrupt is disabled 1 = Interrupt is enabled User and privilege mode (write): 0 = leaves the corresponding bit unchanged 1 = enable interrupt

Copyright © 2025 Texas Instruments Incorporated

Table 11-125. SCISETINT Register Field Descriptions (continued)

Bit	Field	Type	Reset	Description
8	SET_TX_INT	R/W	0h	Set Transmitter interrupt. Setting this bit enables the SCI to generate a transmit interrupt as data is being transferred from SCITD to SCITXSHF and the TXRDY bit is being set. User and privilege mode (read): 0 = Interrupt is disabled 1 = Interrupt is enabled User and privilege mode (write): 0 = leaves the corresponding bit unchanged 1 = enable interrupt
7-2	RESERVED	R	0h	Reserved
1	SET_WAKEUP_INT	R/W	0h	Set Wake-up interrupt User and privilege mode (read): 0 = Interrupt is disabled 1 = Interrupt is enabled User and privilege mode (write): 0 = leaves the corresponding bit unchanged 1 = enable interrupt
0	SET_BRKDT_INT	R/W	0h	Set Break-detect interrupt. Setting this bit enables the SCI to generate an error interrupt if a break condition is detected on the SCIRX pin. User and privilege mode (read): 0 = Interrupt is disabled 1 = Interrupt is enabled User and privilege mode (write): 0 = leaves the corresponding bit unchanged 1 = enable interrupt

Copyright © 2025 Texas Instruments Incorporated

11.1.3.1.6.5 SCICLEARINT Register (Offset = 10h) [Reset = 00000000h]

SCICLEARINT is shown in Table 11-126.

Return to the Summary Table.

SCI Clear Interrupt Register

Table 11-126. SCICLEARINT Register Field Descriptions

Bit	Field	Type	Reset	Description
31-27	RESERVED	R	0h	Reserved
26	CLR_FE_INT	R/W	0h	Clear Framing-Error Interrupt: Setting this bit disables the SCI module to generate an interrupt when there is a Framing error. User and privilege mode (read): 0 = Interrupt is disabled 1 = Interrupt is enabled User and privilege mode (write): 0 = leaves the corresponding bit unchanged 1 = disable interrupt
25	CLR_OE_INT	R/W	0h	Clear Overrun-Error Interrupt. This bit disables the SCI overrun interrupt when set. User and privilege mode (read): 0 = Interrupt is disabled 1 = Interrupt is enabled User and privilege mode (write): 0 = leaves the corresponding bit unchanged 1 = disable interrupt
24	CLR_PE_INT	R/W	0h	Clear Parity Interrupt. Setting this bit disables the SCI Parity error interrupt. User and privilege mode (read): 0 = Interrupt is disabled 1 = Interrupt is enabled User and privilege mode (write): 0 = leaves the corresponding bit unchanged 1 = enable interrupt
23-19	RESERVED	R	0h	Reserved
18	CLR_RX_DMA_ALL	R/W	0h	User and privilege mode (read): 0 = DMA request is disabled for address frames (RX interrupt request is enabled for address frames). DMA request is enabled for data frames. 1 = DMA request is enabled for address and data frames User and privilege mode (write): 0 = leaves the corresponding bit unchanged 1 = disable DMA request for address frames
17	CLR_RX_DMA	R/W	0h	Clear RX DMA request. This bit disalbes the receive DMA request when set. User and privilege mode (read): 0 = DMA request is disabled 1 = DMA request is enabled User and privilege mode (write): 0 = leaves the corresponding bit unchanged 1 = disable DMA request
16	CLR_TX_DMA	R/W	0h	Clear TX DMA request. This bit disables the transmit DMA request when set. User and privilege mode (read): 0 = DMA request is disabled 1 = DMA request is enabled User and privilege mode (write): 0 = leaves the corresponding bit unchanged 1 = disable DMA request
15-10	RESERVED	R	0h	Reserved
9	CLR_RX_INT	R/W	0h	Clear Receiver interrupt. This bit disables the receiver interrupt when set. User and privilege mode (read): 0 = Interrupt is disabled 1 = Interrupt is enabled Privilege mode (write): 0 = leaves the corresponding bit unchanged 1 = disable interrupt

Copyright © 2025 Texas Instruments Incorporated

Table 11-126. SCICLEARINT Register Field Descriptions (continued)

Bit	Field	Type	Reset	Description
8	CLR_TX_INT	R/W	0h	Clear Transmitter interrupt. This bit disables the transmitter interrupt when set. User and privilege mode (read): 0 = Interrupt is disabled 1 = Interrupt is enabled User and privilege mode (write): 0 = leaves the corresponding bit unchanged 1 = disable interrupt
7-2	RESERVED	R	0h	Reserved
1	CLR_WAKEUP_INT	R/W	0h	Clear Wake-up interrupt. This bit disables the wakeup interrupt when set. User and privilege mode (read): 0 = Interrupt is disabled 1 = Interrupt is enabled User and privilege mode (write): 0 = leaves the corresponding bit unchanged 1 = disable interrupt
0	CLR_BRKDT_INT	R/W	0h	Clear Break-detect interrupt. This bit disables the Break-detect interrupt when set. User and privilege mode (read): 0 = Interrupt is disabled 1 = Interrupt is enabled User and privilege mode (write): 0 = leaves the corresponding bit unchanged 1 = disable interrupt

Copyright © 2025 Texas Instruments Incorporated

11.1.3.1.6.6 SCISETINTLVL Register (Offset = 14h) [Reset = 00000000h]

SCISETINTLVL is shown in Table 11-127.

Return to the Summary Table.

SCI Set Interrupt Level Register

Table 11-127. SCISETINTLVL Register Field Descriptions

Bit	Field	Type	Reset	Description
31-27	RESERVED	R	0h	Reserved
26	SET_FE_INT_LVL	R/W	0h	Clear Framing-Error Interrupt Level. User and privilege mode (read): 0 = Interrupt level mapped to INT0 line 1 = Interrupt level mapped to INT1 line User and privilege mode (write): 0 = Leaves the corresponding bit unchanged 1 = Clear interrupt level to line INT1
25	SET_OE_INT_LVL	R/W	0h	Clear Overrun-Error Interrupt Level. User and privilege mode (read): 0 = Interrupt level mapped to INT0 line 1 = Interrupt level mapped to INT1 line User and privilege mode (write): 0 = Leaves the corresponding bit unchanged 1 = Clear interrupt level to line INT1
24	SET_PE_INT_LVL	R/W	0h	Clear Parity Error Interrupt Level. User and privilege mode (read): 0 = Interrupt level mapped to INT0 line 1 = Interrupt level mapped to INT1 line User and privilege mode (write): 0 = Leaves the corresponding bit unchanged 1 = Clear interrupt level to line INT1
23-19	RESERVED	R	0h	Reserved
18	SET_RX_DMA_ALL_INT_LVL	R/W	0h	User and privilege mode (read): 0 = RX interrupt request for address frames mapped to INT0 line. 1 = RX interrupt request for address frames mapped to INT1 line. User and privilege mode (write): 0 = Leaves the corresponding bit unchanged 1 = Clear interrupt level to line INT1
17-16	RESERVED	R	0h	Reserved
15	SET_INC_BR_INT_LVL	R/W	0h	
14-10	RESERVED	R	0h	Reserved
9	SET_RX_INT_LVL	R/W	0h	Clear Receiver interrupt Level. User and privilege mode (read): 0 = Interrupt level mapped to INT0 line 1 = Interrupt level mapped to INT1 line User and privilege mode (write): 0 = Leaves the corresponding bit unchanged 1 = Clear interrupt level to line INT1
8	SET_TX_INT_LVL	R/W	0h	Clear Transmitter interrupt Level. User and privilege mode (read): 0 = Interrupt level mapped to INT0 line 1 = Interrupt level mapped to INT1 line User and privilege mode (write): 0 = Leaves the corresponding bit unchanged 1 = Clear interrupt level to line INT1
7-2	RESERVED	R	0h	Reserved

Copyright © 2025 Texas Instruments Incorporated

Table 11-127. SCISETINTLVL Register Field Descriptions (continued)

Bit	Field	Type	Reset	Description
1	SET_WAKEUP_INT_LVL	R/W	0h	Clear Wake-up interrupt Level. User and privilege mode (read): 0 = Interrupt level mapped to INT0 line 1 = Interrupt level mapped to INT1 line User and privilege mode (write): 0 = Leaves the corresponding bit unchanged 1 = Clear interrupt level to line INT1
0	SET_BRKDT_INT_LVL	R/W	0h	Clear Break-detect interrupt Level. User and privilege mode (read): 0 = Interrupt level mapped to INT0 line 1 = Interrupt level mapped to INT1 line User and privilege mode (write): 0 = Leaves the corresponding bit unchanged 1 = Clear interrupt level to line INT1

Copyright © 2025 Texas Instruments Incorporated

11.1.3.1.6.7 SCICLEARINTLVL Register (Offset = 18h) [Reset = 00000000h]

SCICLEARINTLVL is shown in Table 11-128.

Return to the Summary Table.

SCI Clear Interrupt Level Register

Table 11-128. SCICLEARINTLVL Register Field Descriptions

Bit	Field	Type	Reset	Description
31-27	RESERVED	R	0h	Reserved
26	CLR_FE_INT_LVL	R/W	0h	Clear Framing-Error Interrupt Level. User and privilege mode (read): 0 = Interrupt level mapped to INT0 line 1 = Interrupt level mapped to INT1 line User and privilege mode (write): 0 = Leaves the corresponding bit unchanged 1 = Reset interrupt level to line INT0
25	CLR_OE_INT_LVL	R/W	0h	Clear Framing-Error Interrupt Level. User and privilege mode (read): 0 = Interrupt level mapped to INT0 line 1 = Interrupt level mapped to INT1 line User and privilege mode (write): 0 = Leaves the corresponding bit unchanged 1 = Reset interrupt level to line INT0
24	CLR_PE_INT_LVL	R/W	0h	Clear Framing-Error Interrupt Level. User and privilege mode (read): 0 = Interrupt level mapped to INT0 line 1 = Interrupt level mapped to INT1 line User and privilege mode (write): 0 = Leaves the corresponding bit unchanged 1 = Reset interrupt level to line INT0
23-19	RESERVED	R	0h	Reserved
18	CLR_RX_DMA_ALL_INT_LVL	R/W	0h	Clear receive DMA ALL interrupt level. User and privilege mode (read): 0 = RX interrupt request for address frames is mapped to INT0 line. 1 = RX interrupt request for address frames is mapped to INT1 line. User and privilege mode (write): 0 = Leaves the corresponding bit unchanged. 1 = Reset interrupt level to line INT0.
17-16	RESERVED	R	0h	Reserved
15	CLR_INC_BR_INT_LVL	R/W	0h	
14-10	RESERVED	R	0h	Reserved
9	CLR_RX_INT_LVL	R/W	0h	Clear Receiver interrupt level. User and privilege mode (read): 0 = Interrupt level mapped to INT0 line 1 = Interrupt level mapped to INT1 line User and privilege mode (write): 0 = Leaves the corresponding bit unchanged 1 = Reset interrupt level to line INT0
8	CLR_TX_INT_LVL	R/W	0h	Clear Transmitter interrupt level. User and privilege mode (read): 0 = Interrupt level mapped to INT0 line 1 = Interrupt level mapped to INT1 line User and privilege mode (write): 0 = Leaves the corresponding bit unchanged 1 = Reset interrupt level to line INT0
7-2	RESERVED	R	0h	Reserved

Copyright © 2025 Texas Instruments Incorporated

Table 11-128. SCICLEARINTLVL Register Field Descriptions (continued)

Bit	Field	Type	Reset	Description
1	CLR_WAKEUP_INT_LVL	R/W	0h	Clear Wake-up interrupt level. User and privilege mode (read): 0 = Interrupt level mapped to INT0 line 1 = Interrupt level mapped to INT1 line User and privilege mode (write): 0 = Leaves the corresponding bit unchanged 1 = Reset interrupt level to line INT0
0	CLR_BRKDT_INT_LVL	R/W	0h	Clear Break-detect interrupt level. User and privilege mode (read): 0 = Interrupt level mapped to INT0 line 1 = Interrupt level mapped to INT1 line User and privilege mode (write): 0 = Leaves the corresponding bit unchanged 1 = Reset interrupt level to line INT0

Copyright © 2025 Texas Instruments Incorporated

11.1.3.1.6.8 SCIFLR Register (Offset = 1Ch) [Reset = 00000904h]

SCIFLR is shown in Table 11-129.

Return to the Summary Table.

SCI Flags Register

Table 11-129. SCIFLR Register Field Descriptions

Bit	Field	Type	Reset	Description
31-27	RESERVED	R	0h	Reserved
26	FE	R/W	0h	SCI framing error flag Read: 0=No framing error detected 1=Framing error detected Write: 0=No effect 1=Clears this bit to 0
25	OE	R	0h	SCI overrun error flag This bit is set when the transfer of data from SCIRXSHF to SCIRD overwrites unread data already in SCIRD
24	PE	R	0h	SCI parity error flag. This bit is set when a parity error is detected in the received data
23-13	RESERVED	R	0h	Reserved
12	RXWAKE	R	0h	Receiver wake-up detect flag. The SCI sets this bit to indicate that the data currently in SCIRD is an address
11	TX_EMPTY	R	1h	Transmitter empty flag. The value of this flag indicates the contents of the transmitter's buffer register (SCITD) and shift register (SCITXSHF)
10	TXWAKE	R/W	0h	SCI transmitter wake-up method select. The TXWAKE bit controls whether the data in SCITD should be sent as an address or data frame using multiprocessor communication format
9	RXRDY	R	0h	SCI receiver ready flag. The receiver sets this bit to indicate that the SCIRD contains new data and is ready to be read by the CPU or DMA.
8	TXRDY	R	1h	Transmitter buffer register ready flag. When set, this bit indicates that the transmit buffer register (SCITD) is ready to receive another character.
7-4	RESERVED	R	0h	Reserved
3	Bus_busy_flag	R	0h	This bit indicates whether the receiver is in the process of receiving a frame.
2	IDLE	R	1h	SCI receiver in idle state. While this bit is set, the SCI looks for an idle period to resynchronize itself with the bit stream.
1	WAKEUP	R	0h	Wake-up flag. This bit is set by the SCI when receiver or transmitter activity has taken the module out of power-down mode.
0	BRKDT	R	0h	SCI break-detect flag. This bit is set when the SCI detects a break condition on the SCIRX pin.

Copyright © 2025 Texas Instruments Incorporated

11.1.3.1.6.9 SCIINTVECT0 Register (Offset = 20h) [Reset = 00000000h]

SCIINTVECT0 is shown in Table 11-130.

Return to the Summary Table.

SCI Interrupt Offset Vector 0 Register

Table 11-130. SCIINTVECT0 Register Field Descriptions

Bit	Field	Type	Reset	Description
31-4	RESERVED	R	0h	Reserved
3-0	INTVECT0	R	0h	Interrupt vector offset for INT0

Copyright © 2025 Texas Instruments Incorporated

11.1.3.1.6.10 SCIINTVECT1 Register (Offset = 24h) [Reset = 00000000h]

SCIINTVECT1 is shown in Table 11-131.

Return to the Summary Table.

SCI Interrupt Offset Vector 1 Register

Table 11-131. SCIINTVECT1 Register Field Descriptions

Bit	Field	Type	Reset	Description
31-4	RESERVED	R	0h	Reserved
3-0	INTVECT1	R	0h	Interrupt vector offset for INT1

Copyright © 2025 Texas Instruments Incorporated

11.1.3.1.6.11 SCICHAR Register (Offset = 28h) [Reset = 00000000h]

SCICHAR is shown in Table 11-132.

Return to the Summary Table.

SCI Character Control Register

Table 11-132. SCICHAR Register Field Descriptions

Bit	Field	Type	Reset	Description
31-3	RESERVED	R	0h	Reserved
2-0	CHAR	R/W	0h	Sets the SCI data length from 1 to 8 bits

Copyright © 2025 Texas Instruments Incorporated

11.1.3.1.6.12 SCIBAUD Register (Offset = 2Ch) [Reset = 00000000h]

SCIBAUD is shown in Table 11-133.

Return to the Summary Table.

SCI Baud Rate Selection Register

Table 11-133. SCIBAUD Register Field Descriptions

Bit	Field	Type	Reset	Description
31-24	RESERVED	R	0h	Reserved
23-0	BAUD	R/W	0h	SCI 24-bit baud selection

Copyright © 2025 Texas Instruments Incorporated

11.1.3.1.6.13 SCIED Register (Offset = 30h) [Reset = 00000000h]

SCIED is shown in Table 11-134.

Return to the Summary Table.

Receiver Emulation Data Buffer

Table 11-134. SCIED Register Field Descriptions

Bit	Field	Type	Reset	Description
31-8	RESERVED	R	0h	Reserved
7-0	ED	R	0h	Receiver Emulation Data Buffer

Copyright © 2025 Texas Instruments Incorporated

11.1.3.1.6.14 SCIRD Register (Offset = 34h) [Reset = 00000000h]

SCIRD is shown in Table 11-135.

Return to the Summary Table.

Receiver Data Buffer

Table 11-135. SCIRD Register Field Descriptions

Bit	Field	Type	Reset	Description
31-8	RESERVED	R	0h	Reserved
7-0	RD	R	0h	Contains received data.

Copyright © 2025 Texas Instruments Incorporated

11.1.3.1.6.15 SCITD Register (Offset = 38h) [Reset = 00000000h]

SCITD is shown in Table 11-136.

Return to the Summary Table.

Transmit Data Buffer Register

Table 11-136. SCITD Register Field Descriptions

Bit	Field	Type	Reset	Description
31-8	RESERVED	R	0h	Reserved
7-0	TD	R/W	0h	Contains Data to be transmitted. This is pushed to SCITXSHF(shift register) when TXENA bit is set in SCRGCR1 register.

Copyright © 2025 Texas Instruments Incorporated

11.1.3.1.6.16 SCIPIO0 Register (Offset = 3Ch) [Reset = 00000000h]

SCIPIO0 is shown in Table 11-137.

Return to the Summary Table.

SCI Pin I/O Control Register 0

Table 11-137. SCIPIO0 Register Field Descriptions

Bit	Field	Type	Reset	Description
31-3	RESERVED	R	0h	Reserved
2	TX_FUNC	R/W	0h	Defines the function of pin SCITX. 0=SCITX is a general-purpose digital I/O pin. 1=SCITX is the SCI transmit pin. 0=SCIRX is a general-purpose digital I/O pin. 1=SCIRX is the SCI receive pin.
1	RX_FUNC	R/W	0h	Determines the data direction on the SCIRX pin if it is configured with general-purpose I/O functionality (RX FUNC = 0). See Table 12 for bit values. 0=SCIRX is a general-purpose input pin. 1=SCIRX is a general-purpose output pin
0	CLK_FUNC	R/W	0h	Clock function. Defines the function of pin SCICLK. 0=SCICLK is a general-purpose digital I/O pin. 1=SCICLK is the SCI serial clock pin. Determines the data direction on the SCICLK pin. The direction is defined differently depending upon the value of the CLK FUNC bit

Copyright © 2025 Texas Instruments Incorporated

11.1.3.1.6.17 SCIPIO1 Register (Offset = 40h) [Reset = 00000000h]

SCIPIO1 is shown in Table 11-138.

Return to the Summary Table.

SCI Pin I/O Control Register 1

Table 11-138. SCIPIO1 Register Field Descriptions

Bit	Field	Type	Reset	Description
31-3	RESERVED	R	0h	Reserved
2	TX_DIR	R/W	0h	Determines the data direction on the SCITX pin if it is configured with general-purpose I/O functionality (TX FUNC = 0). See Table 11 for bit values. 0=SCITX is a general-purpose input pin. 1=SCITX is a general-purpose output pin
1	RX_DIR	R/W	0h	Determines the data direction on the SCIRX pin if it is configured with general-purpose I/O functionality (RX FUNC = 0). See Table 12 for bit values. 0=SCIRX is a general-purpose input pin. 1=SCIRX is a general-purpose output pin
0	CLK_DIR	R/W	0h	Clock data direction. Determines the data direction on the SCICLK pin. The direction is defined differently depending upon the value of the CLK FUNC bit

Copyright © 2025 Texas Instruments Incorporated

11.1.3.1.6.18 SCIPIO2 Register (Offset = 44h) [Reset = 00000000h]

SCIPIO2 is shown in Table 11-139.

Return to the Summary Table.

SCI Pin I/O Control Register 2

Table 11-139. SCIPIO2 Register Field Descriptions

Bit	Field	Type	Reset	Description
31-3	RESERVED	R	0h	Reserved
2	TX_DATA_IN	R/W	0h	Contains current value on the SCITX pin. 0=SCITX value is logic low. 1=SCITX value is logic high.
1	RX_DATA_IN	R/W	0h	Contains current value on the SCIRX pin. 0=SCIRX value is logic low. 1=SCIRX value is logic high.
0	CLK_DATA_IN	R/W	0h	Contains the current value on pin SCICLK. 0=Pin SCICLK value is logic low. 1=Pin SCICLK value is logic high.

Copyright © 2025 Texas Instruments Incorporated

11.1.3.1.6.19 SCIPIO3 Register (Offset = 48h) [Reset = 00000000h]

SCIPIO3 is shown in Table 11-140.

Return to the Summary Table.

SCI Pin I/O Control Register 3

Table 11-140. SCIPIO3 Register Field Descriptions

Bit	Field	Type	Reset	Description
31-3	RESERVED	R	0h	Reserved
2	TX_DATA_OUT	R/W	0h	Contains the data to be output on pin SCITX if the following conditions are met: TX FUNC = 0 (SCITX pin is a general-purpose I/O.) TX DATA DIR = 1 (SCITX pin is a general-purpose output.) 0=Output value on SCITX is a 0 (logic low). 1=Output value on SCITX is a 1 (logic high).
1	RX_DATA_OUT	R/W	0h	Contains the data to be output on pin SCIRX if the following conditions are met: RX FUNC = 0 (SCIRX pin is a general-purpose I/O.) RX DATA DIR = 1 (SCIRX pin is a general-purpose output.) 0=Output value on SCIRX is 0 (logic low). 1=Output value on SCIRX is 1 (logic high).
0	CLK_DATA_OUT	R/W	0h	Contains the data to be output on pin SCICLK if the following conditions are met: CLK FUNC = 0 (SCICLK pin is a general-purpose I/O.) CLK DATA DIR = 1 (SCICLK pin is a general-purpose output.) 0=Output value on SCICLK is a 0 (logic low). 1=Output value on SCICLK is a 1 (logic high).

Copyright © 2025 Texas Instruments Incorporated

11.1.3.1.6.20 SCIPIO4 Register (Offset = 4Ch) [Reset = 00000000h]

SCIPIO4 is shown in Table 11-141.

Return to the Summary Table.

SCI Pin I/O Control Register 4

Table 11-141. SCIPIO4 Register Field Descriptions

Bit	Field	Type	Reset	Description
31-3	RESERVED	R	0h	Reserved
2	TX_DATA_SET	R/W	0h	Sets the data to be output on pin SCITX if the following conditions are met: TX FUNC = 0 (SCITX pin is a general-purpose I/O.) TX DATA DIR = 1 (SCITX pin is a general-purpose output.)
1	RX_DATA_SET	R/W	0h	Sets the data to be output on pin SCIRX if the following conditions are met: RX FUNC = 0 (SCIRX pin is a general-purpose I/O.) RX DATA DIR = 1 (SCIRX pin is a general-purpose output.)
0	CLK_DATA_SET	R/W	0h	Sets the data to be output on pin SCICLK if the following conditions are met: CLK FUNC = 0 (SCICLK pin is a general-purpose I/O.) CLK DATA DIR = 1 (SCICLK pin is a general-purpose output.)

Copyright © 2025 Texas Instruments Incorporated

11.1.3.1.6.21 SCIPIO5 Register (Offset = 50h) [Reset = 00000000h]

SCIPIO5 is shown in Table 11-142.

Return to the Summary Table.

SCI Pin I/O Control Register 5

Table 11-142. SCIPIO5 Register Field Descriptions

Bit	Field	Type	Reset	Description
31-3	RESERVED	R	0h	Reserved
2	TX_DATA_CLR	R/W	0h	Clears the data to be output on pin SCITX if the following conditions are met: TX FUNC = 0 (SCITX pin is a general-purpose I/O.) TX DATA DIR = 1 (SCITX pin is a general-purpose output.)
1	RX_DATA_CLR	R/W	0h	Clears the data to be output on pin SCITX if the following conditions are met: TX FUNC = 0 (SCITX pin is a general-purpose I/O.) TX DATA DIR = 1 (SCITX pin is a general-purpose output.)
0	CLK_DATA_CLR	R/W	0h	Clears the data to be output on pin SCITX if the following conditions are met: TX FUNC = 0 (SCITX pin is a general-purpose I/O.) TX DATA DIR = 1 (SCITX pin is a general-purpose output.)

Copyright © 2025 Texas Instruments Incorporated

11.1.3.1.6.22 SCIPIO6 Register (Offset = 54h) [Reset = 00000000h]

SCIPIO6 is shown in Table 11-143.

Return to the Summary Table.

SCI Pin I/O Control Register 6

Table 11-143. SCIPIO6 Register Field Descriptions

Bit	Field	Type	Reset	Description
31-3	RESERVED	R	0h	Reserved
2	TX_PDR	R/W	0h	TX Open Drain Enable Enables open-drain capability in the output pin SCITX if the following conditions are met: TX DATA DIR = 1 (SCITX pin is a general-purpose output.) TX DOUT = 1
1	RX_PDR	R/W	0h	RX Open Drain Enable Enables open-drain capability in the output pin SCIRX if the following conditions are met: RX DATA DIR = 1 (SCIRX pin is a general-purpose output.) RX DOUT = 1
0	CLK_PDR	R/W	0h	CLK Open Drain Enable Enables open-drain capability in the output pin SCICLK if the following conditions are met: CLK DATA DIR = 1 (SCICLK pin is a general-purpose output.) CLK DOUT = 1

Copyright © 2025 Texas Instruments Incorporated

11.1.3.1.6.23 SCIPIO7 Register (Offset = 58h) [Reset = 00000000h]

SCIPIO7 is shown in Table 11-144.

Return to the Summary Table.

SCI Pin I/O Control Register 7

Table 11-144. SCIPIO7 Register Field Descriptions

Bit	Field	Type	Reset	Description
31-3	RESERVED	R	0h	Reserved
2	TX_PD	R/W	0h	TX pin Pull Control Disable Disables pull control capability in the output pin SCITX. 0=Pull Control on SCITX pin is enabled. 1=Pull Control on SCITX pin is disabled.
1	RX_PD	R/W	0h	RX pin Pull Control Disable Disables pull control capability in the output pin SCIRX. 0=Pull Control on SCIRX pin is enabled. 1=Pull Control on SCIRX pin is disabled.
0	CLK_PD	R/W	0h	CLK pin Pull Control Disable Disables pull control capability in the output pin SCICLK. 0=Pull Control on SCICLK pin is enabled. 1=Pull Control on SCICLK pin is disabled.

Copyright © 2025 Texas Instruments Incorporated

11.1.3.1.6.24 SCIPIO8 Register (Offset = 5Ch) [Reset = 00000000h]

SCIPIO8 is shown in Table 11-145.

Return to the Summary Table.

SCI Pin I/O Control Register 8

Table 11-145. SCIPIO8 Register Field Descriptions

Bit	Field	Type	Reset	Description
31-3	RESERVED	R	0h	Reserved
2	TX_PSL	R/W	0h	TX pin Pull Select Selects pull type in the output pin SCITX. 0=Pull-Down is on SCITX pin. 1=Pull-Up is on SCITX pin.
1	RX_PSL	R/W	0h	RX pin Pull Select Selects pull type in the output pin SCIRX. 0=Pull-Down is on SCIRX pin. 1=Pull-Up is on SCIRX pin.
0	CLK_PSL	R/W	0h	CLK pin Pull Select Selects pull type in the output pin SCICLK. 0=Pull-Down is on SCICLK pin. 1=Pull-Up is on SCICLK pin.

Copyright © 2025 Texas Instruments Incorporated

11.1.3.1.6.25 RESERVED2 Register (Offset = 60h) [Reset = 00000000h]

RESERVED2 is shown in Table 11-146.

Return to the Summary Table.

Reserved

Table 11-146. RESERVED2 Register Field Descriptions

Bit	Field	Type	Reset	Description
31-0	RESERVED	R	0h	Reserved

Copyright © 2025 Texas Instruments Incorporated

11.1.3.1.6.26 RESERVED3 Register (Offset = 64h) [Reset = 00000000h]

RESERVED3 is shown in Table 11-147.

Return to the Summary Table.

Reserved

Table 11-147. RESERVED3 Register Field Descriptions

Bit	Field	Type	Reset	Description
31-0	RESERVED	R	0h	Reserved

Copyright © 2025 Texas Instruments Incorporated

11.1.3.1.6.27 RESERVED4 Register (Offset = 68h) [Reset = 00000000h]

RESERVED4 is shown in Table 11-148.

Return to the Summary Table.

Reserved

Table 11-148. RESERVED4 Register Field Descriptions

Bit	Field	Type	Reset	Description
31-0	RESERVED	R	0h	Reserved

Copyright © 2025 Texas Instruments Incorporated

11.1.3.1.6.28 RESERVED5 Register (Offset = 6Ch) [Reset = 00000000h]

RESERVED5 is shown in Table 11-149.

Return to the Summary Table.

Reserved

Table 11-149. RESERVED5 Register Field Descriptions

Bit	Field	Type	Reset	Description
31-0	RESERVED	R	0h	Reserved

Copyright © 2025 Texas Instruments Incorporated

11.1.3.1.6.29 RESERVED6 Register (Offset = 70h) [Reset = 00000000h]

RESERVED6 is shown in Table 11-150.

Return to the Summary Table.

Reserved

Table 11-150. RESERVED6 Register Field Descriptions

Bit	Field	Type	Reset	Description
31-0	RESERVED	R	0h	Reserved

Copyright © 2025 Texas Instruments Incorporated

11.1.3.1.6.30 RESERVED7 Register (Offset = 74h) [Reset = 00000000h]

RESERVED7 is shown in Table 11-151.

Return to the Summary Table.

Reserved

Table 11-151. RESERVED7 Register Field Descriptions

Bit	Field	Type	Reset	Description
31-0	RESERVED	R	0h	Reserved

Copyright © 2025 Texas Instruments Incorporated

11.1.3.1.6.31 RESERVED8 Register (Offset = 78h) [Reset = 00000000h]

RESERVED8 is shown in Table 11-152.

Return to the Summary Table.

Reserved

Table 11-152. RESERVED8 Register Field Descriptions

Bit	Field	Type	Reset	Description
31-0	RESERVED	R	0h	Reserved

Copyright © 2025 Texas Instruments Incorporated

11.1.3.1.6.32 RESERVED9 Register (Offset = 7Ch) [Reset = 00000000h]

RESERVED9 is shown in Table 11-153.

Return to the Summary Table.

Reserved

Table 11-153. RESERVED9 Register Field Descriptions

Bit	Field	Type	Reset	Description
31-0	RESERVED	R	0h	Reserved

Copyright © 2025 Texas Instruments Incorporated

11.1.3.1.6.33 SCIPIO9 Register (Offset = 80h) [Reset = 00000000h]

SCIPIO9 is shown in Table 11-154.

Return to the Summary Table.

SCI Pin I/O Control Register 9

Table 11-154. SCIPIO9 Register Field Descriptions

Bit	Field	Type	Reset	Description
31-3	RESERVED	R	0h	Reserved
2	TX_SL	R/W	0h	This bit controls the slew rate for the SCITX pin. 0=The normal output buffer is used for SCITX pin 1=The output buffer with slew control is used for SCITX pin.
1	RX_SL	R/W	0h	This bit controls the slew rate for the SCIRX pin. 0=The normal output buffer is used for SCIRX pin 1=The output buffer with slew control is used for SCIRX pin
0	CLK_SL	R/W	0h	This bit controls the slew rate for the SCICLK pin. 0=The normal output buffer is used for SCICLK pin 1=The output buffer with slew control is used for SCICLK pin

Copyright © 2025 Texas Instruments Incorporated

11.1.3.1.6.34 SCIIODCTRL Register (Offset = 90h) [Reset = 00000000h]

SCIIODCTRL is shown in Table 11-155.

Return to the Summary Table.

SCI IO DFT Control

Table 11-155. SCIIODCTRL Register Field Descriptions

Bit	Field	Type	Reset	Description
31-27	RESERVED	R	0h	Reserved
26	FEN	R/W	0h	Frame Error Enable. User and Privileged Mode Reads and Writes: 1 = This bit is used to create a Frame Error. The stop bit received is ANDed with '0' and passed to the stop bit check circuitry. 0 = No effect.
25	PEN	R/W	0h	Parity Error Enable. User and Privileged Mode Reads and Writes: 1 = This bit is used to create a Parity Error. The parity bit received is toggled so that a parity error occurs. 0 = No effect
24	BRKDT_ENA	R/W	0h	Break Detect Error Enable. User and Privileged Mode Reads and Writes: 1 = This bit is used to create BRKDT Error. The stop bit of the frame is ANDed with '0' and passed to the RSM so that a frame error occurs. Then the RX pin is forced to continuous low for 10 TBITS so that a BRKDT error occurs. 0 = No effect.
23-21	RESERVED	R	0h	Reserved
20-19	PIN_SAMPLE_MASK	R/W	0h	PIN SAMPLE MASK These bits define the sample number at which the TX Pin value that is being transmitted will be inverted to verify the receive pin samples majority detection circuitry. PIN SAMPLE MASK: 00 -- No Mask, 01 -- Invert the TX Pin value at 7th SCLK, 10 -- Invert the TX Pin value at 8th SCLK, 11 -- Invert the TX Pin value at 9th SCLK.
18-16	TX_SHIFT	R/W	0h	These bits define the delay by which the value on TX pin is delayed so that the value on RX Pin is asynchronous. (Not applicable to Start Bit) TX SHIFT: 000 -- No Delay, 001 -- Delay by 1 SCLK, 010 -- Delay by 2 SCLKs, 011 -- Delay by 3 SCLKs, 100 -- Delay by 4 SCLKs, 101 -- Delay by 5 SCLKs, 110 -- Delay by 6 SCLKs, 111 -- No Delay.
15-12	RESERVED	R	0h	Reserved
11-8	IODFTENA	R/W	0h	These bits define the delay by which the value on TX pin is delayed so that the value on RX Pin is asynchronous. (Not applicable to Start Bit) TX SHIFT: 000 -- No Delay, 001 -- Delay by 1 SCLK, 010 -- Delay by 2 SCLKs, 011 -- Delay by 3 SCLKs, 100 -- Delay by 4 SCLKs, 101 -- Delay by 5 SCLKs, 110 -- Delay by 6 SCLKs, 111 -- No Delay.
7-2	RESERVED	R	0h	Reserved

Copyright © 2025 Texas Instruments Incorporated

Table 11-155. SCIIODCTRL Register Field Descriptions (continued)

Bit	Field	Type	Reset	Description
1	LBP_ENA	R/W	0h	Module loopback enable. user and privileged mode reads: Write only in privileged mode: write/ read : 1=Analog loopback is enabled in module I/O DFT mode(when IODFTENA = 1010) 0=Digital loopback is enabled.
0	RXP_ENA	R/W	0h	Module Analog loopback through receive pin enable. user and privileged mode reads: Write only in privileged mode: write/ read : 1=Analog loopback through receive pin. 0=Analog loopback through transmit pin.

Copyright © 2025 Texas Instruments Incorporated

11.1.3.1.7 SCI GPIO Functionality

The following sections apply to all device pins that can be configured as functional or general-purpose I/O pins.

11.1.3.1.7.1 GPIO Functionality

Figure 11-26 illustrates the GPIO functionality.

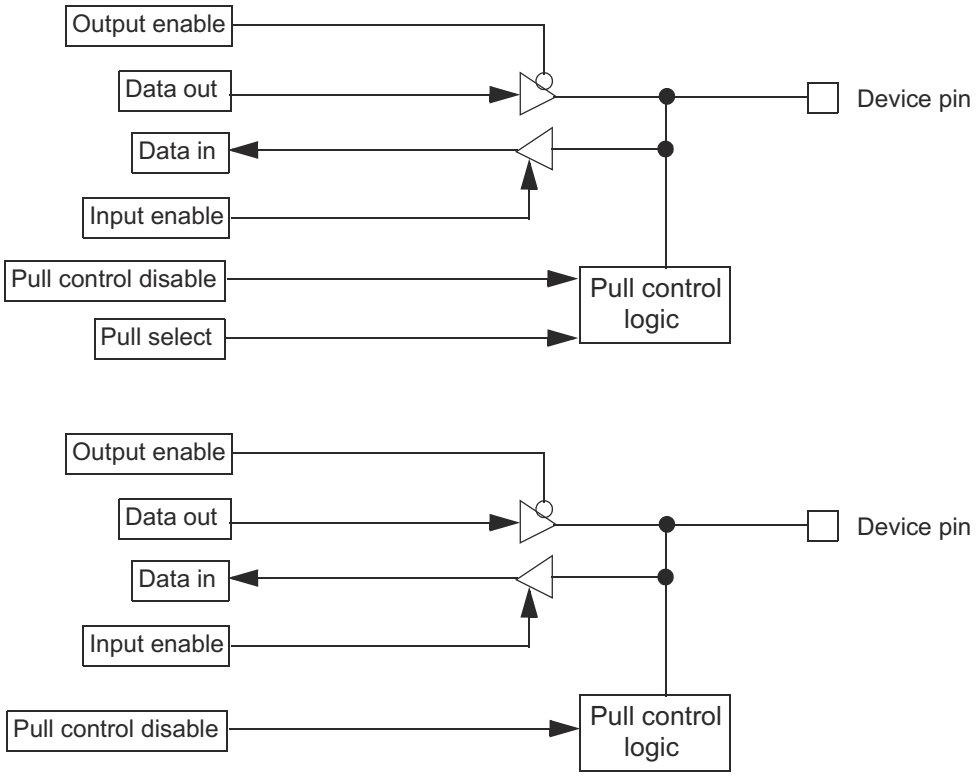

Figure 11-26. GPIO Functionality

11.1.3.1.7.2 Under Reset

The following apply if a device is under reset:

- Pull control. The reset pull control on the pins is enabled.
- Input buffer. The input buffer is enabled.
- Output buffer. The output buffer is disabled.

Copyright © 2025 Texas Instruments Incorporated

11.1.3.1.7.3 Out of Reset

The following apply if the device is out of reset:

- Pull control. The pull control is enabled by clearing the PD (pull control disable) bit in the SCIPIO7 register (SCIPIO7 Register (Offset = 58h) [Reset = 00000000h]). In this case, if the PSL (pull select) bit in the SCIPIO8 register (Section 12.1.3.1.6.24) is set, the pin will have a pull-up. If the PSL bit is cleared, the pin will have a pull-down. If the PD bit is set in the control register, there is no pull-up or pull-down on the pin.
- Input buffer. The input buffer is always enabled in functional mode.

Note

The pull-disable logic depends on the pin direction. It is independent of whether the device is in I/O or functional mode. If the pin is configured as output or transmit, then the pulls are disabled automatically. If the pin is configured as input or receive, the pulls are enabled or disabled depending on bit PD in the pull disable register SCIPIO7 (Section 12.1.3.1.6.23).

- Output buffer. A pin can be driven as an output pin if the TX DIR bit is set in the pin direction control register (SCIPIO1; Section 12.1.3.1.6.17) AND the open-drain feature is not enabled in the SCIPIO6 register (Section 12.1.3.1.6.22).

11.1.3.1.7.4 Open-Drain Feature Enabled on a Pin

The following apply if the open-drain feature is enabled on a pin:

- The output buffer is enabled, if a low signal is being driven on to the pin.
- The output buffer is disabled (the direction control signal DIR is internally forced low), if a high signal is being driven on to the pin.

Note

The open-drain feature is available only in I/O mode (SCIPIO0; Section 12.1.3.1.6.16).

11.1.3.1.7.5 Summary

The behavior of the input buffer, output buffer, and the pull control is summarized in Table 11-156.

Table 11-156. Input Buffer, Output Buffer, and Pull Control Behavior as GPIO Pins

Device under Reset?	Pin Direction (DIR) (1) (2)	Pull Disable (PULDIS) (1) (3)	Pull Select (PULSEL) (1) (4)	Pull Control	Output Buffer	Input Buffer
Yes	X	X	X	Enabled	Disabled	Enabled
No	0	0	0	Pull down	Disabled	Enabled
No	0	0	1	Pull up	Disabled	Enabled
No	0	1	0	Disabled	Disabled	Enabled
No	0	1	1	Disabled	Disabled	Enabled
No	1	X	X	Disabled	Enabled	Enabled

(1) X = Don't care
(2) DIR = 0 for input, = 1 for output
(3) PULDIS = 0 for enabling pull control
= 1 for disabling pull control
(4) PULSEL= 0 for pull-down functionality
= 1 for pull-up functionality

11.1.3.2 RCSS_SCI

Copyright © 2025 Texas Instruments Incorporated

11.1.3.2.1 RCSS SCI UART Overview

The RCSS SCI module is a universal asynchronous receiver-transmitter that includes an Infrared Data Association (IrDA), Serial InfraRed (SIR) protocol ENcoder/DECoder (ENDEC). RCSS SCI's UART Technical Reference Manual can be found here, and the registers are included in the next section.

11.1.3.2.2 RCSS_SCI Registers

RCSS_SCI Registers lists the memory-mapped registers for the RCSS_SCI registers. All register offset addresses not listed in *RCSS_SCI Registers* should be considered as reserved locations and the register contents should not be modified.

Table 11-157. RCSS_SCI Registers

Offset	Acronym	Register Name	Section
0h	UARTDR	Data Register	Go
4h	UARTRSR_ECR	Receive Status Register	Go
18h	UARTFR	Flag Register	Go
20h	UARTILPR	IrDA Low-Power Counter Register	Go
24h	UARTIBRD	Integer Baud Rate Register	Go
28h	UARTFBRD	Fractional Baud Rate Register	Go
2Ch	UARTLCR_H	Line Control Register	Go
30h	UARTCR	Control Register	Go
34h	UARTIFLS	Interrupt FIFO Level Select Register	Go
38h	UARTIMSC	Interrupt Mask Set/Clear Register	Go
3Ch	UARTRIS	Raw Interrupt Status Register	Go
40h	UARTMIS	Masked Interrupt Status Register	Go
44h	UARTICR	Interrupt Clear Register	Go
48h	UARTDMACR	DMA Control Register	Go
FE0h	UARTPERIPHID0	Peripheral Identification Register 0	Go
FE4h	UARTPERIPHID1	Peripheral Identification Register 1	Go
FE8h	UARTPERIPHID2	Peripheral Identification Register 2	Go
FECh	UARTPERIPHID3	Peripheral Identification Register 3	Go
FF0h	UARTPCELLID0	PrimeCell Identification Registers 0	Go
FF4h	UARTPCELLID1	PrimeCell Identification Registers 1	Go
FF8H	UARTPCELLID2	PrimeCell Identification Registers 2	Go
FFCh	UARTPCELLID3	PrimeCell Identification Registers 3	Go

Complex bit access types are encoded to fit into small table cells. *RCSS_SCI Access Type Codes* shows the codes that are used for access types in this section.

Table 11-158. MSS_SCI Access Type Codes

Access Type	Code	Description
Read Type		
R	R	Read
Write Type		
W	W	Write
Reset or Default Value		
-n		Value after reset or the default value

Copyright © 2025 Texas Instruments Incorporated

11.1.3.2.2.1 UARTDR Register (Offset = 0h) [Reset = 00000000h]

UARTDR is shown in UARTDR Register Field Description

Return to the Summary Table.

The UARTDR register is the Data Register

Table 11-159. UARTDR Register Field Descriptions

Bit	Field	Type	Reset	Description
31-12	RESERVED	R	0h	Reserved
11	OE	R/W	0h	Overrun error. This bit is set to 1 if data is received and the receive FIFO is already full.This is cleared to 0 once there is an empty space in the FIFO and a new character can be written to it.
10	BE	R/W	0h	Break error. This bit is set to 1 if a break condition was detected, indicating that the received data inputwas held LOW for longer than a full-word transmission time (defined as start, data, parity and stopbits).In FIFO mode, this error is associated with the character at the top of the FIFO. When a break occurs,only one 0 character is loaded into the FIFO. The next character is only enabled after the receive datainput goes to a 1 (marking state), and the next valid start bit is received.
9	PE	R/W	0h	Parity error. When set to 1, it indicates that the parity of the received data character does not match theparity that the EPS and SPS bits in the Line Control Register, UARTLCR. In FIFO mode, this error is associated with the character at the top of the FIFO.
8	FA	R/W	0h	Framing error. When set to 1, it indicates that the received character did not have a valid stop bit (a validstop bit is 1). In FIFO mode, this error is associated with the character at the top of the FIFO
0	DATA	R/W	0h	Receive data character & Transmit data character

Copyright © 2025 Texas Instruments Incorporated

11.1.3.2.2.2 UARTRSR_ECR Register (Offset = 4h) [Reset = 00000000h]

UARTRSR_ECR is shown in UARTRSR_ECR Regsiter Field Descriptions

Return to the Summary Table.

The UARTRSR_ECR is the Receive Status Register/Error Clear Register

Table 11-160. UARTRSR_ECR Register Field Descriptions

Bit	Field	Type	Reset	Description
31-4	RESERVED	R	0h	Reserved
3	OE	R/W	0h	Overrun error. This bit is set to 1 if data is received and the FIFO is already full.This bit is cleared to 0 by a write to UARTECR.The FIFO contents remain valid because no more data is written when the FIFO is full, only the contentsof the shift register are overwritten. The CPU must now read the data, to empty the FIFO
2	BE	R/W	0h	Break error. This bit is set to 1 if a break condition was detected, indicating that the received data inputwas held LOW for longer than a full-word transmission time (defined as start, data, parity, and stop bits).This bit is cleared to 0 after a write to UARTECR.In FIFO mode, this error is associated with the character at the top of the FIFO. When a break occurs,only one 0 character is loaded into the FIFO. The next character is only enabled after the receive datainput goes to a 1 (marking state) and the next valid start bit is received
1	PE	R/W	0h	Parity error. When set to 1, it indicates that the parity of the received data character does not match theparity that the EPS and SPS bits in the Line Control Register, UARTLCR_H. This bit is cleared to 0 by a write to UARTECR. In FIFO mode, this error is associated with the character at the top of the FIFO.
0	FE	R/W	0h	Framing error. When set to 1, it indicates that the received character did not have a valid stop bit (a validstop bit is 1).This bit is cleared to 0 by a write to UARTECR.In FIFO mode, this error is associated with the character at the top of the FIFO.

Copyright © 2025 Texas Instruments Incorporated

11.1.3.2.2.3 UARTFR Register (Offset = 18h) [Reset = 00000090h]

UARTFR is shown in UARTFR Register Field Descriptions.

Return to the Summary Table.

The UARTFR is the Flag Register

Table 11-161. UARTFR Register Field Descriptions

Bit	Field	Type	Reset	Description
31-9	RESERVED	R	0h	Reserved
8	RI	R	0h	Ring indicator. This bit is the complement of the UART ring indicator, nUARTRI, modem status input. That is, the bit is 1 when nUARTRI is LOW.
7	TXFE	R	1h	Transmit FIFO empty. The meaning of this bit depends on the state of the FEN bit in the Line Control Register, UARTLCR_H. If the FIFO is disabled, this bit is set when the transmit holding register is empty.If the FIFO is enabled, the TXFE bit is set when the transmit FIFO is empty. This bit does not indicate if there is data in the transmit shift register.
6	RXFF	R	0h	Receive FIFO full. The meaning of this bit depends on the state of the FEN bit in the UARTLCR_H Register. If the FIFO is disabled, this bit is set when the receive holding register is full. If the FIFO is enabled, the RXFF bit is set when the receive FIFO is full.
5	TXFF	R	0h	Transmit FIFO full. The meaning of this bit depends on the state of the FEN bit in the UARTLCR_H Register. If the FIFO is disabled, this bit is set when the transmit holding register is full. If the FIFO is enabled, the TXFF bit is set when the transmit FIFO is full.
4	RXFE	R	0h	Receive FIFO empty. The meaning of this bit depends on the state of the FEN bit in the UARTLCR_H Register. If the FIFO is disabled, this bit is set when the receive holding register is empty. If the FIFO is enabled, the RXFE bit is set when the receive FIFO is empty.
3	BUSY	R	0h	UART busy. If this bit is set to 1, the UART is busy transmitting data. This bit remains set until the complete byte, including all the stop bits, has been sent from the shift register. This bit is set as soon as the transmit FIFO becomes non-empty, regardless of whether the UART is enabled or not.
2	DCD	R	0h	Data carrier detect. This bit is the complement of the UART data carrier detect, nUARTDCD, modem status input. That is, the bit is 1 when nUARTDCD is LOW.
1	DSR	R	0h	Data set ready. This bit is the complement of the UART data set ready, nUARTDSR, modem status input. That is, the bit is 1 when nUARTDSR is LOW.
0	CTS	R	0h	Clear to send.

Copyright © 2025 Texas Instruments Incorporated

11.1.3.2.2.4 UARTILPR Register (Offset = 20h) [Reset = 00000000h]

UARTILPR is shown in UARTILPR Register Field Descriptions.

Return to the Summary Table.

UARTILPR is the IrDA Low-Power Counter Registers

Table 11-162. UARTTILPR Register Field Descriptions

Bit	Field	Type	Reset	Description
31-27	RESERVED	R	0h	Reserved
7-0	ILPDVSR	R/W	0h	8-bit low-power divisor value. NOTE Zero is an illegal value. Programming a zero value results in no IrLPBaud16 pulses being generated

Copyright © 2025 Texas Instruments Incorporated

11.1.3.2.2.5 UARTIBRD Register (Offset = 24h) [Reset = 00000000h]

UARTIBRD is shown in UARTIBRD Register Field Descriptions

Return to the Summary Table.

UARTIBRD is the Integer Baud Rate Register

Table 11-163. UARTIBRD Register Field Descriptions

Bit	Field	Type	Reset	Description
31-8	RESERVED	R	0h	Reserved
7-0	BAUD_DIVINT	R/W	0h	The fractional baud rate divisor

Copyright © 2025 Texas Instruments Incorporated

11.1.3.2.2.6 UARTFBRD Register (Offset = 28h) [Reset = 00000000h]

UARTFBRD is shown in UARTFBRD Register Field Descriptions

Return to the Summary Table.

UARTFBRD Fractional Baud Rate Register

Table 11-164. UARTFBRD Register Field Descriptions

Bit	Field	Type	Reset	Description
31-6	RESERVED	R	0h	Reserved
5-0	BAUD_DIVFRAC	R/W	0h	The fractional baud rate divisor. Baud rate divisor BAUDDIV = (FUARTCLK/(16*Baud rate)) where FUARTCLK is the UART reference clock frequency. If the required baud rate is 230400 and UARTCLK = 4MHz then: • Baud Rate Divisor = (4*106)/(16*230400) = 1.085 • This means BRDI = 1 and BRDF = 0.085. • Therefore, fractional part, m = integer((0.085*64)+0.5) = 5 • Generated baud rate divider = 1+5/64 = 1.078 • Generated baud rate = (4*106)/(16*1.078) = 231911 • Error = (231911-230400)/230400*100 = 0.656% • The maximum error using a 6-bit UARTFBRD Register = 1/64*100 = 1.56%. • This occurs when m = 1, and the error is cumulative over 64 clock ticks.

Copyright © 2025 Texas Instruments Incorporated

11.1.3.2.2.7 UARTLCR_H Register (Offset = 2Ch) [Reset = 00000000h]

UARTLCR_H is shown in UARTLCR_H Register Field Descriptions

Return to the Summary Table.

UARTLCR_H is the Line Control Register

Table 11-165. UARTLCR_H Register Field Descriptions

Bit	Field	Type	Reset	Description
31-8	RESERVED	R	0h	Reserved
7	SPS	R/W	0h	Stick parity select. 0 = stick parity is disabled 1 = if the EPS bit is 0 then the parity bit is transmitted and checked as a 1 & if the EPS bit is 1 then the parity bit is transmitted and checked as a 0. This bit has no effect when the PEN bit disables parity checking and generation
6:5	WLEN	R/W	0h	Word length. These bits indicate the number of data bits transmitted or received in a frame as follows b11 = 8 bits b10 = 7 bits b01 = 6 bits b00 = 5 bits
4	FEN	R/W	0h	Enable FIFOs: 0 = FIFOs are disabled (character mode) that is, the FIFOs become 1-byte-deep holding registers 1 = transmit and receive FIFO buffers are enabled (FIFO mode)
3	STP2	R/W	0h	Two stop bits select. If this bit is set to 1, two stop bits are transmitted at the end of the frame. The receive logic does not check for two stop bits being received.
2	EPS	R/W	0h	Even parity select. Controls the type of parity the UART uses during transmission and reception: 0 = odd parity. The UART generates or checks for an odd number of 1s in the data and parity bits. 1 = even parity. The UART generates or checks for an even number of 1s in the data and parity bits. This bit has no effect when the PEN bit disables parity checking and generation
1	PEN	R/W	0h	Parity enable: 0 = parity is disabled and no parity bit added to the data frame 1 = parity checking and generation is enabled
0	BRK	R/W	0h	Send break. If this bit is set to 1, a low-level is continually output on the UARTTXD output, after completing transmission of the current character. For the proper execution of the break command, the software must set this bit for at least two complete frames. For normal use, this bit must be cleared to 0.

Copyright © 2025 Texas Instruments Incorporated

11.1.3.2.2.8 UARTCR Register (Offset = 30h) [Reset = 00000300h]

UARTCR is shown in UARTCR Regsiter Field Description

Return to the Summary Table.

UARTCR is the Control Register

Table 11-166. UARTCR Register Field Descriptions

Bit	Field	Type	Reset	Description
31-16	RESERVED	R	0h	Reserved
15	CTSEN	R/W	0h	CTS hardware flow control enable. If this bit is set to 1, CTS hardware flow control is enabled. Data is only transmitted when the nUARTCTS signal is asserted
14	RTSEN	R/W	0h	RTS hardware flow control enable. If this bit is set to 1, RTS hardware flow control is enabled. Data is only requested when there is space in the receive FIFO for it to be received
13	OUT2	R/W	0h	This bit is the complement of the UART Out2 (nUARTOut2) modem status output. That is, when the bit is programmed to a 1, the output is 0. For DTE this can be used as Ring Indicator (RI).
12	OUT1	R/W	0h	This bit is the complement of the UART Out1 (nUARTOut1) modem status output. That is, when the bit is programmed to a 1 the output is 0. For DTE this can be used as Data Carrier Detect (DCD).
11	RTS	R/W	0h	Request to send. This bit is the complement of the UART request to send, nUARTRTS, modem status output. That is, when the bit is programmed to a 1 then nUARTRTS is LOW
10	DTR	R/W	0h	Data transmit ready. This bit is the complement of the UART data transmit ready, nUARTDTR, modem status output. That is, when the bit is programmed to a 1 then nUARTDTR is LOW
9	RXE	R/W	1h	Receive enable. If this bit is set to 1, the receive section of the UART is enabled. Data reception occurs for either UART signals or SIR signals depending on the setting of the SIREN bit. When the UART is disabled in the middle of reception, it completes the current character before stopping
8	TXE	R/W	1h	Transmit enable. If this bit is set to 1, the transmit section of the UART is enabled. Data transmission occurs for either UART signals, or SIR signals depending on the setting of the SIREN bit. When the UART is disabled in the middle of transmission, it completes the current character before stopping.
7	LBE	R/W	0h	Loopback enable. If this bit is set to 1 and the SIREN bit is set to 1 and the SIRTEST bit in the Test Control Register, UARTTCR on page 4-5 is set to 1, then the nSIROUT path is inverted, and fed through to the SIRIN path. The SIRTEST bit in the test register must be set to 1 to override the normal half-duplex SIR operation. This must be the requirement for accessing the test registers during normal operation, and SIRTEST must be cleared to 0 when loopback testing is finished. This feature reduces the amount of external coupling required during system test. If this bit is set to 1, and the SIRTEST bit is set to 0, the UARTTXD path is fed through to the UARTRXD path. In either SIR mode or UART mode, when this bit is set, the modem outputs are also fed through to the modem inputs. This bit is cleared to 0 on reset, to disable loopback.
6-3	RESERVED	R/W	0h	Reserved
2	SIRLP	R	0h	SIR low-power IrDA mode. This bit selects the IrDA encoding mode. If this bit is cleared to 0, low-level bits are transmitted as an active high pulse with a width of 3/16th of the bit period. If this bit is set to 1, low-level bits are transmitted with a pulse width that is 3 times the period of the IrLPBaud16 input signal, regardless of the selected bit rate. Setting this bit uses less power, but might reduce transmission distances.

Copyright © 2025 Texas Instruments Incorporated

Table 11-166. UARTCR Register Field Descriptions (continued)

Bit	Field	Type	Reset	Description
1	SIREN	R/W	0h	SIR enable: 0 = IrDA SIR ENDEC is disabled. nSIROUT remains LOW (no light pulse generated), and signal transitions on SIRIN have no effect. 1 = IrDA SIR ENDEC is enabled. Data is transmitted and received on nSIROUT and SIRIN. UARTTXD remains HIGH, in the marking state. Signal transitions on UARTRXD or modem status inputs have no effect. This bit has no effect if the UARTEN bit disables the UART.
0	UARTEN	R/W	0h	UART enable: 0 = UART is disabled. If the UART is disabled in the middle of transmission or reception, it completes the current character before stopping. 1 = the UART is enabled. Data transmission and reception occurs for either UART signals or SIR signals depending on the setting of the SIREN bit

Copyright © 2025 Texas Instruments Incorporated

11.1.3.2.2.9 UARTIFLS Register (Offset = 34h) [Reset = 0000000Ah]

UARTIFLS is shown in UARTIFLS Register Field Descriptions

Return to the Summary Table.

UARTIFLS is the Interrupt FIFO Level Select Register

Table 11-167. UARTIFLS Register Field Descriptions

Bit	Field	Type	Reset	Description
31-4	RESERVED	R	0h	Reserved
5-3	RXIFSEL	R/W	1h	Receive interrupt FIFO level select. The trigger points for the receive interrupt are as follows: • b000 = Receive FIFO becomes ≥ 1/8 full • b001 = Receive FIFO becomes ≥ 1/4 full • b010 = Receive FIFO becomes ≥ 1/2 full • b011 = Receive FIFO becomes ≥ 3/4 full • b100 = Receive FIFO becomes ≥ 7/8 full • b101-b111 = reserved
2-0	TXIFLSEL	R/W	2h	Transmit interrupt FIFO level select. The trigger points for the transmit interrupt are as follows: • b000 = Transmit FIFO becomes ≤ 1/8 full • b001 = Transmit FIFO becomes ≤ 1/4 full • b010 = Transmit FIFO becomes ≤ 1/2 full • b011 = Transmit FIFO becomes ≤ 3/4 full • b100 = Transmit FIFO becomes ≤ 7/8 full • b101-b111 = reserved

Copyright © 2025 Texas Instruments Incorporated

11.1.3.2.2.10 UARTIMSC Register (Offset = 38h) [Reset = 00000000h]

UARTIMSC is shown in UARTIMSCR Register Field Description.

Return to the Summary Table.

UARTIMSC is the Interrupt Mask Set/Clear Register

Table 11-168. UARTIMSC Register Field Descriptions

Bit	Field	Type	Reset	Description
31-11	RESERVED	R	0h	Reserved
10	OEIM	R/W	0h	Overrun error interrupt mask. A read returns the current mask for the UARTOEINTR interrupt.On a write of 1, the mask of the UARTOEINTR interrupt is set. A write of 0 clears the mask.
9	BEIM	R/W	0h	Break error interrupt mask. A read returns the current mask for the UARTBEINTR interrupt. On a write of 1, the mask of the UARTBEINTR interrupt is set. A write of 0 clears the mask.
8	PEIM	R/W	0h	Parity error interrupt mask. A read returns the current mask for the UARTPEINTR interrupt.On a write of 1, the mask of the UARTPEINTR interrupt is set. A write of 0 clears the mask.
7	FEIM	R/W	0h	Framing error interrupt mask. A read returns the current mask for the UARTFEINTR interrupt.On a write of 1, the mask of the UARTFEINTR interrupt is set. A write of 0 clears the mask/
6	RTIM	R/W	0h	Receive timeout interrupt mask. A read returns the current mask for the UARTRTINTR interrupt.On a write of 1, the mask of the UARTRTINTR interrupt is set. A write of 0 clears the mask.
5	TXIM	R/W	0h	Transmit interrupt mask. A read returns the current mask for the UARTTXINTR interrupt.On a write of 1, the mask of the UARTTXINTR interrupt is set. A write of 0 clears the mask.
4	RXIM	R/W	0h	Receive interrupt mask. A read returns the current mask for the UARTRXINTR interrupt.On a write of 1, the mask of the UARTRXINTR interrupt is set. A write of 0 clears the mask.
3	DSRMIM	R/W	0h	nUARTDSR modem interrupt mask. A read returns the current mask for the UARTDSRINTR interrupt.On a write of 1, the mask of the UARTDSRINTR interrupt is set. A write of 0 clears the mask.
2	DCDMIM	R/W	0h	nUARTDCD modem interrupt mask. A read returns the current mask for the UARTDCDINTR interrupt.On a write of 1, the mask of the UARTDCDINTR interrupt is set. A write of 0 clears the mask.
1	CTSMIM	R/W	0h	nUARTCTS modem interrupt mask. A read returns the current mask for the UARTCTSINTR interrupt. On a write of 1, the mask of the UARTCTSINTR interrupt is set. A write of 0 clears the mask.
0	RIMIM	R/W	0h	nUARTRI modem interrupt mask. A read returns the current mask for the UARTRIINTR interrupt.On a write of 1, the mask of the UARTRIINTR interrupt is set. A write of 0 clears the mask.

Copyright © 2025 Texas Instruments Incorporated

11.1.3.2.2.11 UARTRIS Register (Offset = 3Ch) [Reset = 00000000h]

UARTRIS is shown in uARTRIS Register Field Descriptions

Return to the Summary Table.

UARTRIS is the Raw Interrupt Status Register

Table 11-169. UARTRIS Register Field Descriptions

Bit	Field	Type	Reset	Description
31-10	RESERVED	R	0h	Reserved
9	OERIS	R	0h	Overrun error interrupt status. Returns the raw interrupt state of the UARTOEINTR interrupt. BERIS Break error interrupt status. Returns the raw interrupt state of the UARTBEINTR interrupt.
8	PERIS	R	0h	Parity error interrupt status. Returns the raw interrupt state of the UARTPEINTR interrupt.
7	FERIS	R	0h	Framing error interrupt status. Returns the raw interrupt state of the UARTFEINTR interrupt.
6	RTSIS	R	0h	Receive timeout interrupt status. Returns the raw interrupt state of the UARTRTINTR interrupt.
5	TXRIS	R	0h	Transmit interrupt status. Returns the raw interrupt state of the UARTTXINTR interrupt.
4	RXRIS	R	0h	Receive interrupt status. Returns the raw interrupt state of the UARTRXINTR interrupt.
3	DSRRMIS	R	0h	nUARTDSR modem interrupt status. Returns the raw interrupt state of the UARTDSRINTR interrupt
2	DCDRMIS	R	0h	nUARTDCD modem interrupt status. Returns the raw interrupt state of the UARTDCDINTR interrupt
1	CTSRMIS	R	0h	nUARTCTS modem interrupt status. Returns the raw interrupt state of the UARTCTSINTR interrupt.
0	RIRMIS	R	0h	nUARTRI modem interrupt status. Returns the raw interrupt state of the UARTRIINTR interrupt.

Copyright © 2025 Texas Instruments Incorporated

11.1.3.2.2.12 UARTMIS Register (Offset = 40h) [Reset = 00000000h]

UARTMIS is shown in UARTMIS Register Field Descriptions

Return to the Summary Table.

UARTMIS is the Masked Interssupt Status Regsiter

Table 11-170. UARTMIS Register Field Descriptions

Bit	Field	Type	Reset	Description
31-11	RESERVED	R	0h	Reserved
10	OEMIS	R	0h	Overrun error masked interrupt status. Returns the masked interrupt state of the UARTOEINTR interrupt.
9	BEMIS	R	0h	Break error masked interrupt status. Returns the masked interrupt state of the UARTBEINTR interrupt.
8	PEMIS	R	0h	Parity error masked interrupt status. Returns the masked interrupt state of the UARTPEINTR interrupt.
7	FEMIS	R	0h	Framing error masked interrupt status. Returns the masked interrupt state of the UARTFEINTR interrupt.
6	RTMIS	R	0h	Receive timeout masked interrupt status. Returns the masked interrupt state of the UARTRTINTR interrupt.
5	TXMIS	R	0h	Transmit masked interrupt status. Returns the masked interrupt state of the UARTTXINTR interrupt.
4	RXMIS	R	0h	Receive masked interrupt status. Returns the masked interrupt state of the UARTRXINTR interrupt.
3	DSRMMIS	R	0h	nUARTDSR modem masked interrupt status. Returns the masked interrupt state of the UARTDSRINTR interrupt.
2	DCDMMIS	R	0h	nUARTDCD modem masked interrupt status. Returns the masked interrupt state of the UARTDCDINTR interrupt.
1	CTSMMIS	R	0h	nUARTCTS modem masked interrupt status. Returns the masked interrupt state of the UARTCTSINTR interrupt.
0	RIMMIS	R	0h	nUARTRI modem masked

Copyright © 2025 Texas Instruments Incorporated

11.1.3.2.2.13 UARTICR Register (Offset = 44h) [Reset = 00000000h]

UARTICR is shown in UARTICR Register Field Descriptions

Return to the Summary Table.

UARTICR is the Interrupt Clear Register

Table 11-171. UARTICR Register Field Descriptions

Bit	Field	Type	Reset	Description
31-11	RESERVED	R	0h	Reserved
10	OEIC	W	0h	Overrun error interrupt clear. Clears the UARTOEINTR interrupt.
9	BEIC	W	0h	Break error interrupt clear. Clears the UARTBEINTR interrupt.
8	PEIC	W	0h	Parity error interrupt clear. Clears the UARTPEINTR interrupt.
7	FEIC	W	0h	Framing error interrupt clear. Clears the UARTFEINTR interrupt.
6	RTIC	W	0h	Receive timeout interrupt clear. Clears the UARTRTINTR interrupt.
5	TXIC	W	0h	Transmit interrupt clear. Clears the UARTTXINTR interrupt.
4	RXIC	W	0h	Receive interrupt clear. Clears the UARTRXINTR interrupt.
3	DSRMIC	W	0h	nUARTDSR modem interrupt clear. Clears the UARTDSRINTR interrupt.
2	DCDMIC	W	0h	nUARTDCD modem interrupt clear. Clears the UARTDCDINTR interrupt.
1	CTSMIC	W	0h	nUARTCTS modem interrupt clear. Clears the UARTCTSINTR interrupt.
0	RIMIC	W	0h	nUARTRI modem interrupt clear. Clears the UARTRIINTR interrupt.

Copyright © 2025 Texas Instruments Incorporated

11.1.3.2.2.14 UARTDMACR Register (Offset = 48h) [Reset = 00000000h]

UARTDMACR is shown in UARTDMACR Register Field Descriptions

Return to the Summary Table.

UARTDMACR is the DMA Control Register

Table 11-172. UARTDMACR Register Field Descriptions

Bit	Field	Type	Reset	Description
31-3	RESERVED	R	0h	Reserved
2	DMAONERR	R/W	0h	DMA on error. If this bit is set to 1, the DMA receive request outputs, UARTRXDMASREQ or UARTRXDMABREQ, are disabled when the UART error interrupt is asserted.
1	TXDMAE	R/W	0h	Transmit DMA enable. If this bit is set to 1, DMA for the transmit FIFO is enabled.
0	RXDMAE	R/W	0h	Receiver DMA enable. If this bit is set to 1, DMA for the receiver FIFO is enabled.

Copyright © 2025 Texas Instruments Incorporated

11.1.3.2.2.15 UARTPERIPHID0 Register (Offset = FE0h) [Reset = 00000011h]

UARTPERIPHID0 is shown in UARTPERIPHID0 Register Field Descriptions

Return to the Summary Table.

UARTPERIPHID0 is the Peripheral Identification Register

Table 11-173. UARTPERIPHID0 Register Field Descriptions

Bit	Field	Type	Reset	Description
31-0	UARTPERIPHID0	R	11h	Peripheral Identification Registers UARTPeriphID0

Copyright © 2025 Texas Instruments Incorporated

11.1.3.2.2.16 UARTPERIPHID1 Register (Offset = FE4h) [Reset = 00000010h]

UARTPERIPHID1 is shown in UARTPERIPHID1 Register Field Descriptions

Return to the Summary Table.

UARTPERIPHID1 is the Peripheral Identification Register

Table 11-174. UARTPERIPHID1 Register Field Descriptions

Bit	Field	Type	Reset	Description
31-0	UARTPERIPHID1	R	10h	Peripheral Identification Registers UARTPeriphID1

Copyright © 2025 Texas Instruments Incorporated

11.1.3.2.2.17 UARTPERIPHID2 Register (Offset = FE8h) [Reset = 00000004h]

UARTPERIPHID2 is shown in UARTPERIPHID2 Register Field Descriptions

Return to the Summary Table.

UARTPERIPHID2 is the Peripheral Identification Register

Table 11-175. UARTPERIPHID2 Register Field Descriptions

Bit	Field	Type	Reset	Description
31-0	UARTPERIPHID2	R	4h	Peripheral Identification Registers UARTPeriphID2

Copyright © 2025 Texas Instruments Incorporated

11.1.3.2.2.18 UARTPERIPHID3 Register (Offset = FECh) [Reset = 00000000h]

UARTPERIPHID3 is shown in UARTPERIPHID3 Register Field Descriptions

Return to the Summary Table.

UARTPERIPHID3 is the Peripheral Identification Register

Table 11-176. SCIPIO2 Register Field Descriptions

Bit	Field	Type	Reset	Description
31-0	UARTPERIPHID3	R	0h	Peripheral Identification Registers UARTPeriphID3

Copyright © 2025 Texas Instruments Incorporated

11.1.3.2.2.19 UARTPCELLID0 Register (Offset = FF0h) [Reset = 0000000Dh]

UARTPCELLID0 is shown in UARTPCELLID0 Register Field Descriptions.

Return to the Summary Table.

UARTPCELLID0 is the PrimeCell Identification Register

Table 11-177. UARTPCELLID0 Register Field Descriptions

Bit	Field	Type	Reset	Description
31-0	UARTPCELLID0	R	Dh	PrimeCell Identification Registers UARTPCell ID0

Copyright © 2025 Texas Instruments Incorporated

11.1.3.2.2.20 UARTPCELLID1 Register (Offset = FF4h) [Reset = 000000F0h]

UARTPCELLID1 is shown in UARTPCELLID1 Register Field Descriptions.

Return to the Summary Table.

UARTPCELLID1 is the PrimeCell Identification Register

Table 11-178. UARTPCELLID1 Register Field Descriptions

Bit	Field	Type	Reset	Description
31-0	RESERVED	R	F0h	PrimeCell Identification Registers UARTPCell ID1

UARTPCELLID2 Register (Offset = FF8h) [Reset = 00000005h]

UARTPCELLID2 is shown in UARTPCELLID2 Register Field Descriptions.

Return to the Summary Table.

UARTPCELLID2 is the PrimeCell Identification Register

Table 11-179. UARTPCELLID2 Register Field Descriptions

Bit	Field	Type	Reset	Description
31-0	RESERVED	R	5h	PrimeCell Identification Registers UARTPCell ID2

UARTPCELLID3 Register (Offset = FFCh) [Reset = 000000B1h]

UARTPCELLID3 is shown in UARTPCELLID3 Register Field Descriptions.

Return to the Summary Table.

UARTPCELLID3 is the PrimeCell Identification Register

Table 11-180. UARTPCELLID3 Register Field Descriptions

Bit	Field	Type	Reset	Description
31-0	RESERVED	R	B1h	PrimeCell Identification Registers UARTPCell ID3

11.1.4 Multi-Buffered Serial Peripheral Interface Module (MibSPI) with Parallel Pin Option (MibSPIP)

This chapter provides the specifications for a 16-bit configurable synchronous multi-buffered multi-pin serial peripheral interface (MibSPI). This chapter also provides the specifications for MibSPI with Parallel Pin Option (MibSPIP). The MibSPI is a programmable-length shift register used for high-speed communication between external peripherals or other microcontrollers.

Throughout this chapter, all references to SPI also apply to MibSPI/MibSPIP, unless otherwise noted.

Note

This chapter describes a superset implementation of the MibSPI/SPI modules that includes features and functionality that may not be available on some devices. Device-specific content that should be determined by referencing the datasheet includes DMA functionality, MibSPI RAM size, number of transfer groups, number of chip selects, parallel mode support, and availability of 5-pin operation ($\overline{\text{SPIENA}}$).

11.1.4.1 Overview 2286
11.1.4.2 Operating Modes 2287
11.1.4.3 Test Features 2308
11.1.4.4 General-Purpose I/O 2310
11.1.4.5 Interrupts 2311

Copyright © 2025 Texas Instruments Incorporated

11.1.4.6 DMA Interface 2314
11.1.4.7 Module Configuration 2315
11.1.4.8 Control Registers 2317
11.1.4.9 Multi-Buffer RAM 2396
11.1.4.10 Parity Memory 2404
11.1.4.11 MibSPI Pin Timing Parameters 2407

Copyright © 2025 Texas Instruments Incorporated

11.1.4.1 Overview

The MibSPI/MibSPIP is a high-speed synchronous serial input/output port that allows a serial bit stream of programmed length (2 to 16 bits) to be shifted in and out of the device at a programmed bit-transfer rate. Typical applications for the SPI include interfacing to external peripherals, such as I/Os, memories, display drivers, and analog-to-digital converters.

The SPI has the following attributes:

- 16-bit shift register
- Receive buffer register
- 11-bit baud clock generator
- Serial clock (SPICLK) pin
- 1 SPIPOCI/SPIPICO pin for data transfer, with programmable pin direction
- SPI enable ($\overline{\text{SPIENA}}$) pin
- Up to 6 peripheral chip select ($\overline{\text{SPICS}}$) pins
- SPICLK can be internally-generated (and driven) or received from an external clock source
- Each word transferred can have a unique format
- SPI pins can be used as functional or digital Input/Output pins (GIOs)

Note

PICO - Peripheral In Controller Out Pin
POCI - Peripheral Out Controller In Pin
SPICS - SPI Chip Select Pin
SPIENA - SPI Enable Pin

This device has for instances of MibSPI:

- MSS_MIBSPIA
- MSS_MIBSPIB
- RCSS_MIBSPIA
- RCSS_MIBSPIB

11.1.4.1.1 Word Format Options

Each word transferred can have a unique format. Several format characteristics are programmable for each word transferred:

- SPICLK frequency
- Character length (2 to 16 bits)
- Phase (with and without delay)
- Polarity (high or low)
- Parity enabled/disabled
- Chip Select(CS) timers for setup and hold
- Shift direction (Most-Significant Bit (MSB) first or Least-Significant Bit (LSB) first)
- Multi-pin parallel modes

11.1.4.1.2 Multi-buffering (Mib) Support

The MibSPI has a programmable buffer memory that enables programmed transmission to be completed without CPU intervention. The buffers are combined in different Transfer Groups (TGs) that can be triggered by external events (timers, Input/Output activity, and so on) or by the internal tick counter. The internal tick counter supports periodic trigger events. Each buffer of the MibSPI can be associated with different DMA channels in different TGs, allowing the user to move data between internal memory and an external controller with minimal CPU interaction.

Copyright © 2025 Texas Instruments Incorporated

11.1.4.1.2.1 Multi-buffer Mode

Multi-buffer Mode is an extension to the SPI. In multi-buffer mode, many extended features are configurable:

- Number of buffers for each peripheral (or data source/destination, up to 128 buffers supported) or group (up to 8 groupings)
- Triggers for each group, trigger types, trigger sources for individual groups (14 external trigger sources and 1 internal trigger source supported)
- Memory fault detection via an internal parity circuit
- Number of DMA-controlled buffers and number of DMA request channels (up to 8 for each of transmit and receive)
- Number of DMA transfers for each buffer (up to 65536 words for up to 8 buffers)
- Uninterrupted DMA buffer transfer (NOBREAK buffer)

11.1.4.1.2.2 Compatibility Mode

Compatibility Mode of the MibSPI makes it behave exactly like a standard platform SPI module and ensures full compatibility with other SPIs. All features in compatibility mode of the MibSPI are directly applicable to a SPI. Multi-buffer Mode features are not available in Compatibility Mode.

Note

The SPIDAT0 register is not accessible in the multi-buffer mode of MibSPI. It is only accessible in compatibility mode.

11.1.4.1.3 Transmission Lock (Multi-Buffer Mode Controller Only)

Some peripheral devices require transmission of a command followed by data. In this case the SPI transaction should not be interrupted by another group transfer. The LOCK bit within each buffer allows a consecutive transfer to happen without being interrupted by another higher-priority group transfer.

11.1.4.2 Operating Modes

The SPI can be configured via software to operate as either a controller or a peripheral. The CONTROLLER bit (SPIGCR1[0]) selects the configuration of the SPIPICO and SPIPOCI pins. CLKMOD bit (SPIGCR1[1]) determines whether an internal or external clock source will be used.

The chip select ($\overline{\text{SPICS}}$) pins are used when communicating with multiple peripheral devices or, with a single peripheral device, to delimit messages containing a leading register address. When a write occurs to SPIDAT1 in controller mode, the $\overline{\text{SPICS}}$ pins are automatically driven to select the specified peripheral device.

Handshaking mechanism, provided by the $\overline{\text{SPIENA}}$ pin, enables a peripheral SPI to delay the generation of the clock signal supplied by the controller if it is not prepared for the next exchange of data.

Note

If in the peripheral mode of operation and configured in either 3-pin or 4-pin (without $\overline{\text{SPIENA}}$) modes, there must be a minimum of 8 VCLK cycles of delay between the last SPICLK and the start of the SPICLK for the next buffer transmit. In general, this equates to a VCLK/SPICLK ratio of ≤16 requiring a minimum of 1 SPICLK delay between transmissions.

Copyright © 2025 Texas Instruments Incorporated

11.1.4.2.1 Pin Configurations

The SPI supports data connections as shown in Table 11-181.

Note

1. When the SPICS signals are disabled, the chip select field in the transmit data is not used.
2. When the SPIENA signal is disabled, the SPIENA pin is ignored in controller mode, and not driven as part of the SPI transaction in peripheral mode.

Table 11-181. Pin Configurations

Pin	Controller Mode		Peripheral Mode	
SPICLK	Drives the clock to external devices		Receives the clock from the external controller	
SPIPSOCI	Receives data from the external peripheral		Sends data to the external controller	
SPIPICO	Transmits data to the external peripheral		Receives data from the external controller	
SPIENA	**SPIENA disabled:** GIO	**SPIENA enabled:** Receives ENA signal from the external peripheral	**SPIENA disabled:** GIO	**SPIENA enabled:** Drives ENA signal from the external controller
SPICS	**SPICS disabled:** GIO	**SPICS enabled:** Selects one or more peripheral devices	**SPICS disabled:** GIO	**SPICS enabled:** Receives the CS signal from the external controller

11.1.4.2.2 Data Handling

Figure 11-27 shows the SPI transaction hardware. TXBUF and RXBUF are internal buffers that are intended to improve the overall throughput of data transfer. TXBUF is a transmit buffer, while RXBUF is a receive buffer.

11.1.4.2.2.1 Data Sequencing when SPIDAT0 or SPIDAT1 is Written

- If both the TX shift register and TXBUF are empty, then the data is directly copied to the TX shift register. For devices with DMA, if DMA is enabled, a transmit DMA request (TX_DMA_REQ) is generated to cause the next word to be fetched. If transmit interrupts are enabled, a transmitter-empty interrupt is generated.
- If the TX shift register is already full or is in the process of shifting and if TXBUF is empty then the data written to SPIDAT0 / SPIDAT1 is copied to TXBUF and TXFULL flag is set to 1 at the same time.
- When a shift operation is complete, data from the TXBUF (if it is full) is copied into TX shift register and the TXFULL flag is cleared to 0 to indicate that next data can be fetched. A transmit DMA request (if enabled) or a transmitter-empty interrupt (if enabled) is generated at the same time.

11.1.4.2.2.2 Data Sequencing when All Bits Shifted into RXSHIFT Register

- If both SPIBUF and RXBUF are empty, the received data in RX shift register is directly copied into SPIBUF and the receive DMA request (if enabled) is generated and the receive-interrupt (if enabled) is generated. The RXEMPTY flag in SPIBUF is cleared at the same time.
- If SPIBUF is already full at the end of receive completion, the RX shift register contents is copied to RXBUF. A receive DMA request is generated, if enabled. The receive complete interrupt line remains high.
- If SPIBUF is read by the CPU or DMA and if RXBUF is full, then the contents of RXBUF are copied to SPIBUF as soon as SPIBUF is read. RXEMPTY flag remains cleared, indicating that SPIBUF is still full.
- If both SPIBUF and RXBUF are full, then RXBUF will be overwritten and the RXOVR interrupt flag is set and an interrupt is generated, if enabled.

Copyright © 2025 Texas Instruments Incorporated

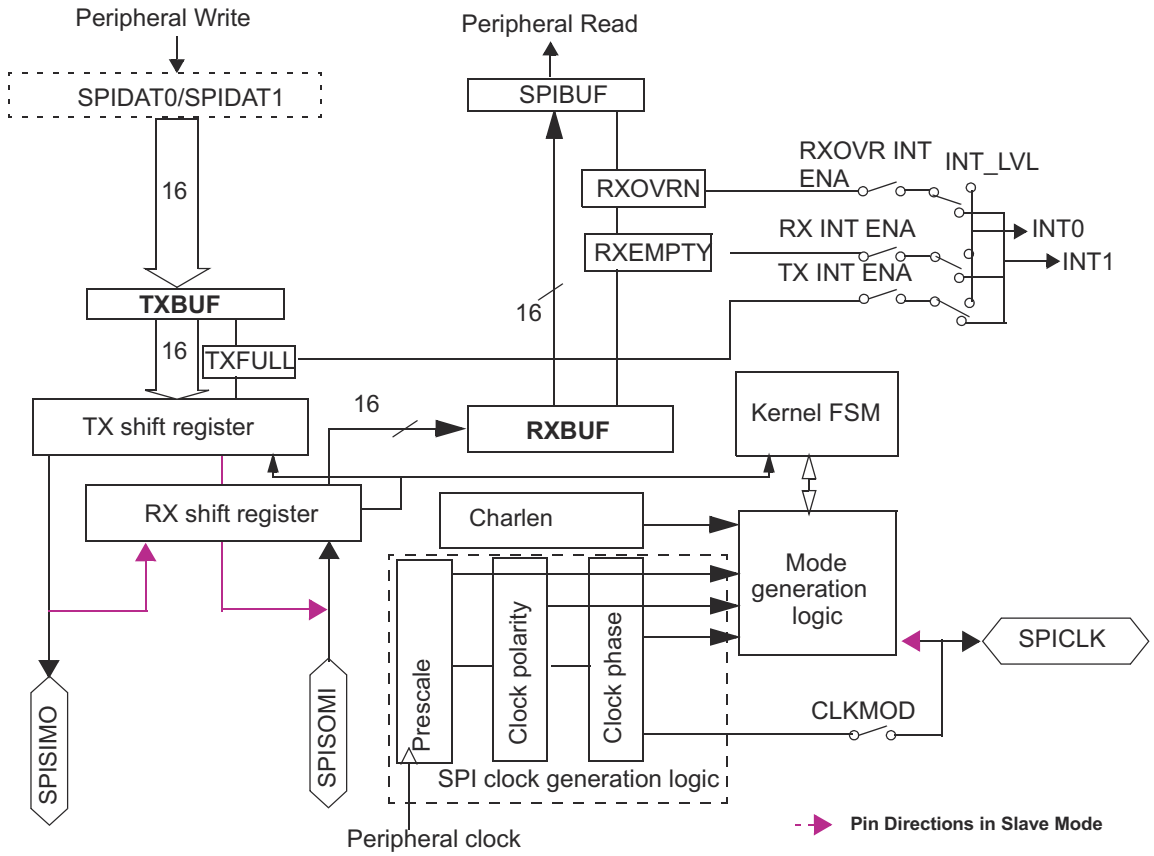

1 This is a representative diagram, which shows three-pin mode hardware.
2 TXBUF, RXBUF, and SHIFT_REGISTER are user-invisible registers.
3 SPIDAT0 and SPIDAT1 are user-visible, and are physically mapped to the contents of TXBUF.
4 SPISIMO, SPISOMI, SPICLK pin directions depend on the Master or Slave Mode.

Figure 11-27. SPI Functional Logic Diagram

Copyright © 2025 Texas Instruments Incorporated

11.1.4.2.2.3 Three-Pin Mode

In controller mode configuration (MASTER = 1 and CLKMOD = 1), the SPI provides the serial clock on the SPICLK pin. Data is transmitted on the SPISIMO pin and received on the SPISOMI pin (see Figure 11-28).

Data written to the shift register (SPIDAT0 / SPIDAT1) initiates data transmission on the SPISIMO pin, MSB first. Simultaneously, received data is shifted through the SPISOMI pin into the LSB of the SPIDAT0 register. When the selected number of bits have been transmitted, the received data in the shift register is transferred to the SPIBUF register for the CPU to read. Data is stored right-justified in SPIBUF.

See Section 11.1.4.2.2.1 and Section 11.1.4.2.2.2 for details about the data handling for transmit and receive operations.

In peripheral mode configuration (MASTER = 0 and CLKMOD = 0), data shifts out on the SPIPOCI pin and in on the SPIPICO pin. The SPICLK pin is used as the input for the serial shift clock, which is supplied from the external network controller. The transfer rate is defined by this clock.

Data written to the SPIDAT0 or SPIDAT1 register is transmitted to the network when the SPICLK signal is received from the network controller. To receive data, the SPI waits for the network controller to send the SPICLK signal and then shifts data on the SPISIMO pin into the RX shift register. If data is to be transmitted by the peripheral simultaneously, it must be written to the SPIDAT0 or SPIDAT1 register before the beginning of the SPICLK signal.

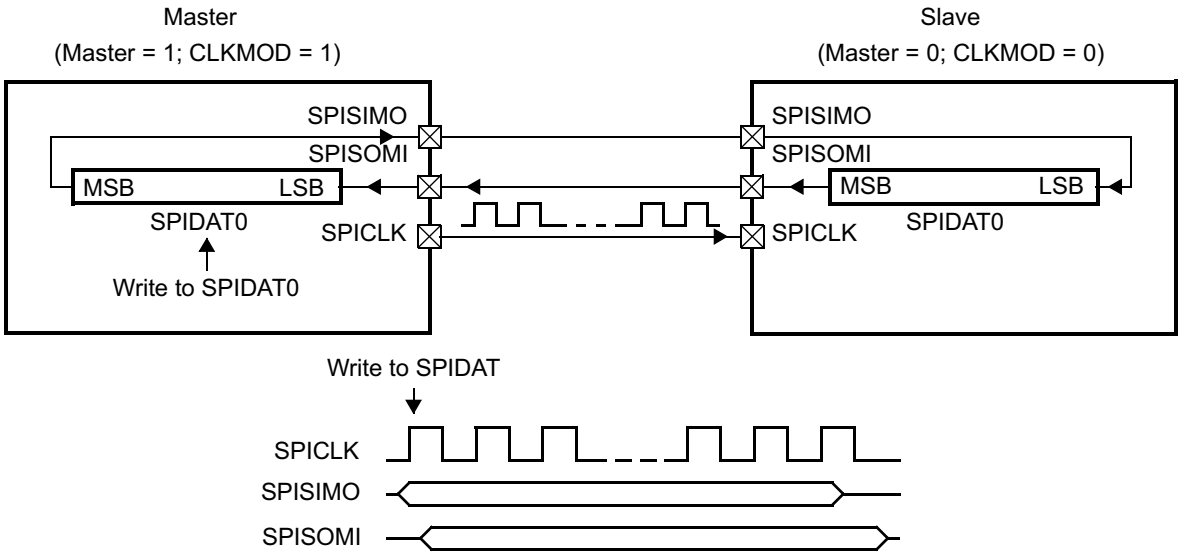

Figure 11-28. SPI Three-Pin Operation

Copyright © 2025 Texas Instruments Incorporated

11.1.4.2.3 Operation with $\overline{\text{SPICS}}$

In controller mode, each chip select signal is used to select a specific peripheral. In peripheral mode, the chip select signal is used to enable and disable the transfer. Chip-select functionality is enabled by setting one of the $\overline{\text{SPICS}}$ pins as a chip select. It is disabled by setting all $\overline{\text{SPICS}}$ pins as GIOs in SPIPC0.

11.1.4.2.3.1 Multiple Chip Selects

The $\overline{\text{SPICS}}$ pins that are used must be configured as functional pins in the SPIPC0 register. The default pattern to be put on the $\overline{\text{SPICS}}$ when all the peripherals are deactivated is set in the SPIDEF register. This pattern allows different peripherals with different chip-select polarity to be activated by the SPI.

The controller-mode SPI is capable of driving either 0 or 1 as the active value for any $\overline{\text{SPICS}}$ output pin. The drive state for the $\overline{\text{SPICS}}$ pins is controlled by the CSNR field of SPIDAT1. The pattern that is driven will select the peripheral to which the transmission is dedicated.

In peripheral mode, the SPI can only be selected by an active value of 0 on any of its selected $\overline{\text{SPICS}}$ input pins.

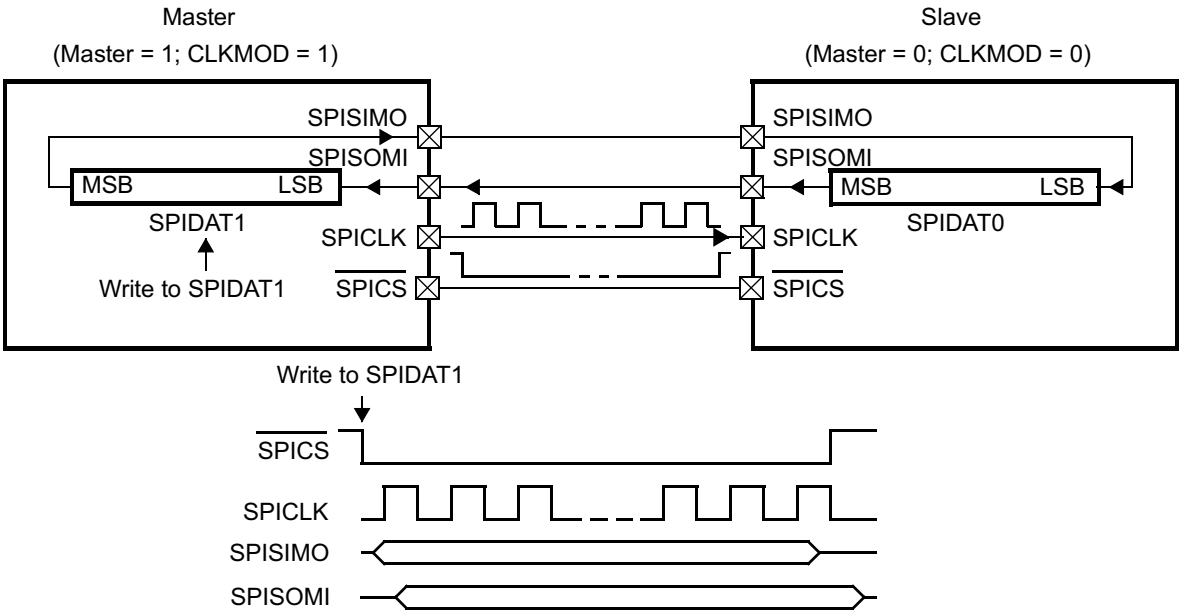

Figure 11-29. Operation with $\overline{\text{SPICS}}$

Copyright © 2025 Texas Instruments Incorporated

11.1.4.2.4 Operation with SPIENA

The SPIENA operates as a WAIT signal pin. For both the peripheral and the controller, the SPIENA pin must be configured to be functional (SPIPC0[8] = 1). In this mode, an active-low signal from the peripheral on the SPIENA pin allows the controller SPI to drive the clock pulse stream. A high signal tells the controller to hold the clock signal (and delay SPI activity).

If the SPIENA pin is in high-impedance mode (ENABLE_HIGHZ = 1), the peripheral will put SPIENA into the high-impedance once it completes receiving a new character. If the SPIENA pin is in push-pull mode (ENABLE_HIGHZ = 0), the peripheral will drive SPIENA to 1 once it completes receiving a new character. The peripheral will drive SPIENA low again for the next word to transfer, after new data is written to the peripheral TX shift register.

In controller mode (CLKMOD = 1), if the SPIENA pin is configured as functional, then the pin acts as an input pin. If configured as a peripheral SPI and as functional, the SPIENA pin acts as an output pin.

Note

During a transfer, if a peripheral-mode SPI detects a deassertion of its chip select before its internal character length counter overflows, then it places SPISOMI and SPIENA (if ENABLE_HIGHZ bit is set to 1) in high-impedance mode. Once this condition has occurred, if a SPICLK edge is detected while the chip select is deasserted, then the SPI stops that transfer and sets an DLENERR error flag and generates an interrupt (if enabled).

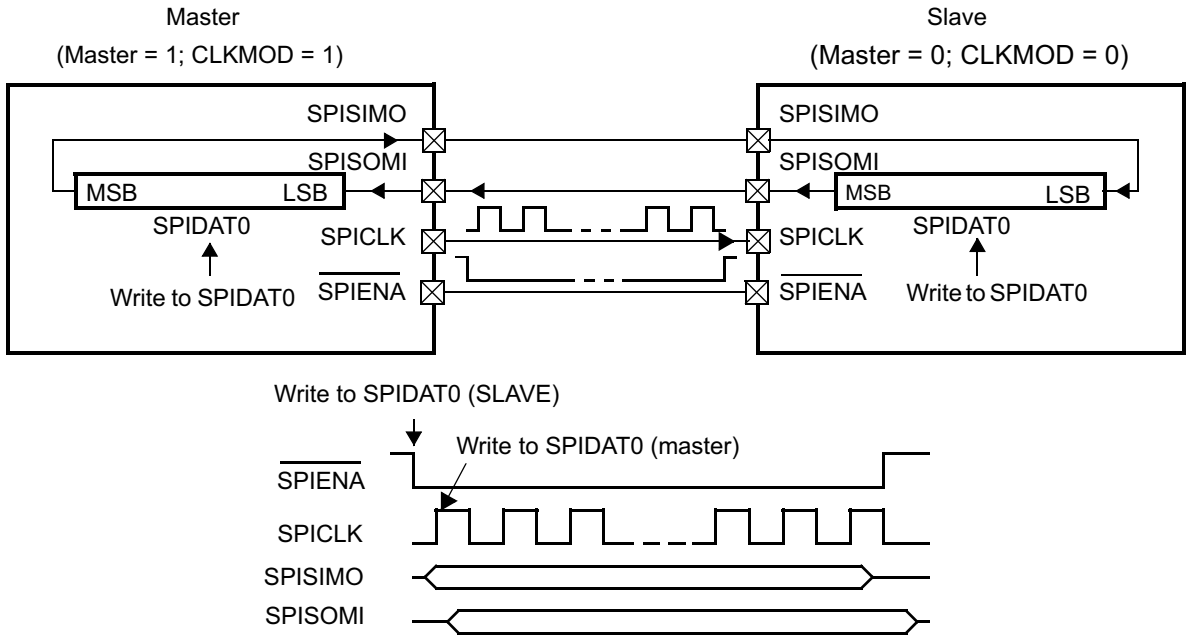

Figure 11-30. Operation with SPIENA

Copyright © 2025 Texas Instruments Incorporated

11.1.4.2.5 Five-Pin Operation (Hardware Handshaking)

Five-pin operation combines the functionality of three-pin mode, plus the enable pin and one or more chip select pins. The result is full hardware handshaking. To use this mode, both the SPIENA pin and the required number of SPICS pins must be configured as functional pins.

If the SPIENA pin is in high-impedance mode (ENABLE_HIGHZ = 1), the peripheral SPI will put this signal into the high-impedance state by default. The peripheral will drive the signal SPIENA low when new data is written to the peripheral shift register and the peripheral has been selected by the controller (SPICS is low).

If the SPIENA pin is in push-pull mode (ENABLE_HIGHZ = 0), the peripheral SPI drives this pin high by default when it is in functional mode. The peripheral SPI will drive the SPIENA signal low when new data is written to the peripheral shift register (SPIDAT0/SPIDAT1) and the peripheral is selected by the controller (SPICS is low). If the peripheral is deselected by the controller (SPICS goes high), the peripheral SPIENA signal is driven high.

Note

Push-pull mode of the SPIENA pin can be used only when there is a single peripheral in the system. When multiple SPI peripheral devices are connected to the common SPIENA pin, all of the peripherals should configure their SPIENA pins in high-impedance mode.

In controller mode, if the SPICS pins are configured as functional pins, then the pins will be in output mode. A write to the controller's SPIDAT1/SPIDAT0 register will automatically drive the SPICS signals low. The controller will drive the SPICS signals high again after completing the transfer of the bits of the data.

In peripheral mode (CLKMOD = 0), the SPICS pins act as SPI functional inputs.

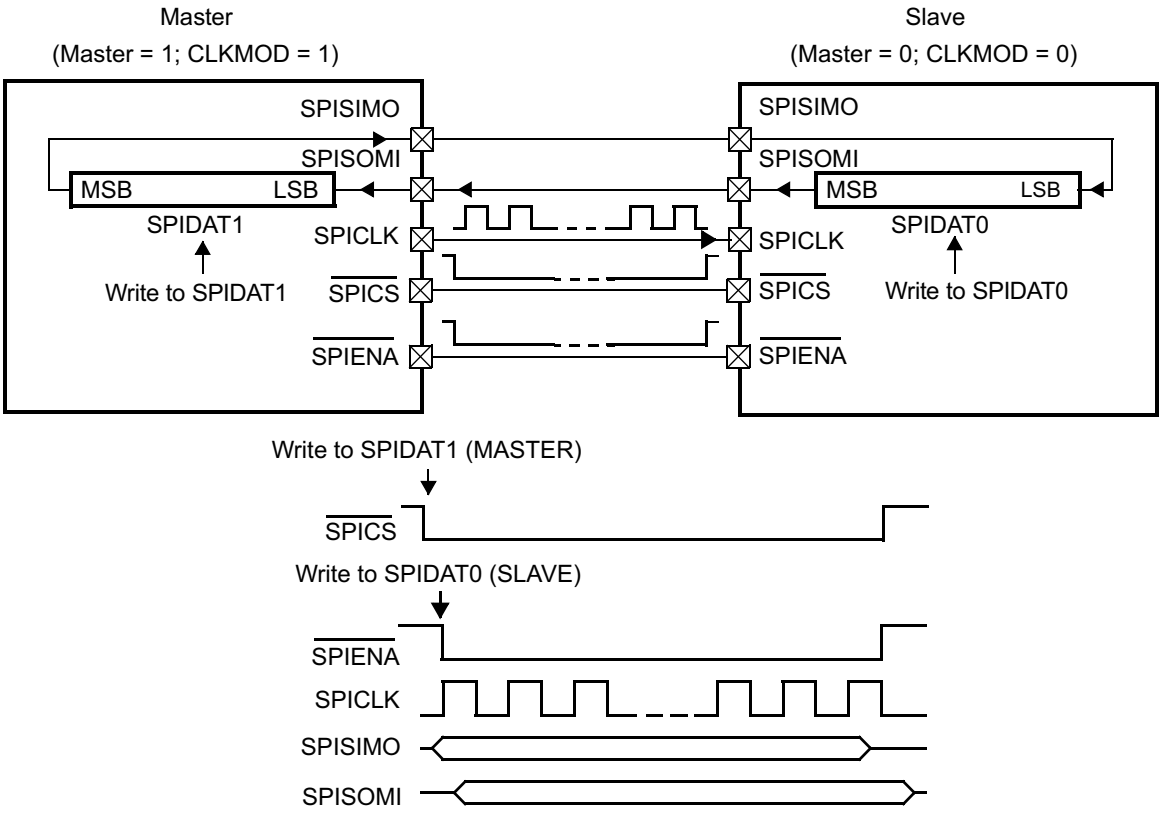

Figure 11-31. SPI Five-Pin Option with SPIENA and SPICS

Copyright © 2025 Texas Instruments Incorporated

11.1.4.2.6 Data Formats

To support multiple different types of peripherals in one SPI network, four independent data word formats are implemented that allow configuration of individual data word length, polarity, phase, and bit rate. Each word transmitted can select which data format to use via the bits DFSEL[1:0] in its control field from one of the four data word formats. Same data format can be supported on multiple chip selects.

Data formats 0, 1, 2, and 3 can be configured through SPIFMTx control registers.

Each SPI data format includes the standard SPI data format with enhanced features:

- Individually-configurable shift direction can be used to select MSB first or LSB first, whereas the position of the MSB depends on the configured data word length.
- Receive data is automatically right-aligned, independent of shift direction and data word length. Transmit data has to be written right-aligned into the SPI and the internal shift register will transmit according to the selected shift direction and data word length for correct transfer.
- To increase fault detection of data transmission and reception, an odd or even parity bit can be added at the end of a data word. The parity generator can be enabled or disabled individually for each data format. If a received parity bit does not match with the locally calculated parity bit, the parity error flag (PARITYERR) is set and an interrupt is asserted (if enabled).

Since the controller-mode SPI can drive two consecutive accesses to the same peripheral, an 8-bit delay counter is available to satisfy the delay time for data to be refreshed in the accessed peripheral. The delay counter can be programmed as part of the data format.

CHARLEN[4:0] specifies the number of bits (2 to 16) in the data word. The CHARLEN[4:0] value directs the state control logic to count the number of bits received or transmitted to determine when a complete word is transferred.

Data word length **must** be programmed to the same length for both the **controller** and the **peripheral**. However, when chip selects are used, there may be multiple targets with different lengths in the system.

Note

Data must be right-justified when it is written to the SPI for transmission irrespective of its character length or word length.

Figure 11-32 shows how a 12-bit word (0xEC9) needs to be written to the transmit buffer to be transmitted correctly.

Figure 11-32. Format for Transmitting an 12-Bit Word

D15	D14	D13	D12	D11	D10	D9	D8	D7	D6	D5	D4	D3	D2	D1	D0
x	x	x	x	1	1	1	0	1	1	0	0	1	0	0	1

Note

The received data is always stored right-justified regardless of the character length or direction of shifting and is padded with leading 0s when the character length is less than 16 bits.

Figure 11-33 shows how a 10-bit word (0x0A2) is stored in the buffer once it is received.

Figure 11-33. Format for Receiving an 10-Bit Word

D15	D14	D13	D12	D11	D10	D9	D8	D7	D6	D5	D4	D3	D2	D1	D0
0	0	0	0	0	0	0	0	1	0	1	0	0	0	1	0

Copyright © 2025 Texas Instruments Incorporated

11.1.4.2.7 Clocking Modes

SPICLK may operate in four different modes, depending on the choice of phase (delay/no delay) and the polarity (rising edge/falling edge) of the clock.

The data input and output edges depend on the values of both POLARITY and PHASE as shown in Table 11-182.

Table 11-182. Clocking Modes

POLARITY	PHASE	Action
0	0	Data is output on the rising edge of SPICLK. Input data is latched on the falling edge.
0	1	Data is output one half-cycle before the first rising edge of SPICLK and on subsequent falling edges. Input data is latched on the rising edge of SPICLK.
1	0	Data is output on the falling edge of SPICLK. Input data is latched on the rising edge.
1	1	Data is output one half-cycle before the first falling edge of SPICLK and on subsequent rising edges. Input data is latched on the falling edge of SPICLK.

Figure 11-34 to Figure 11-37 illustrate the four possible configurations of **SPICLK** corresponding to each mode. Having four signal options allows the SPI to interface with many different types of serial devices.

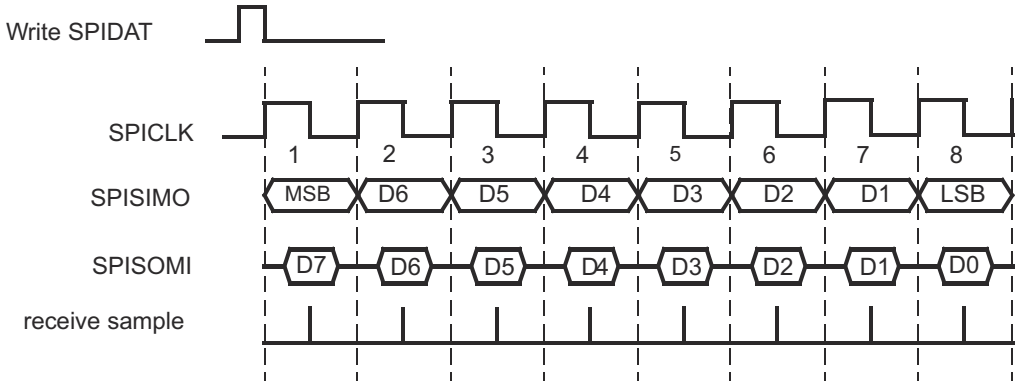

Data is output on the rising edge of SPICLK.
Input data is latched on the falling edge of SPICLK.

Figure 11-34. Clock Mode with Polarity = 0 and Phase = 0

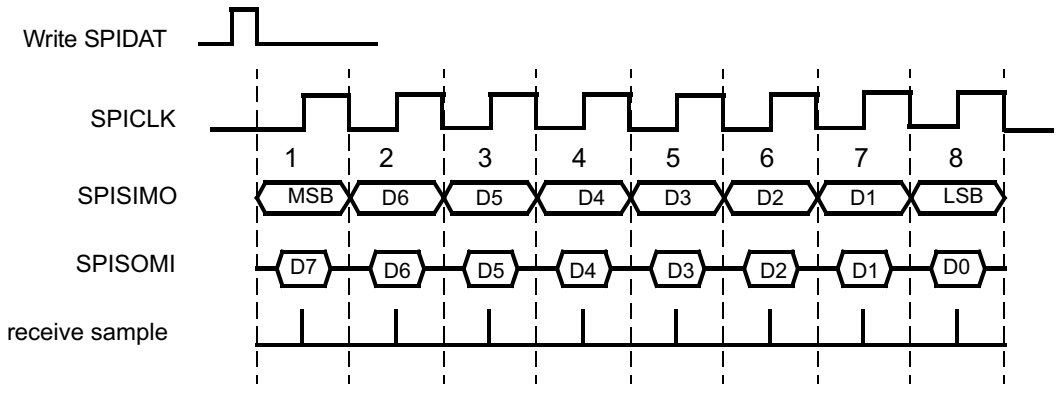

Data is output one-half cycle before the first rising edge of SPICLK and on subsequent falling edges of SPICLK
Input data is latched on the rising edge of SPICLK

Figure 11-35. Clock Mode with Polarity = 0 and Phase = 1

Copyright © 2025 Texas Instruments Incorporated

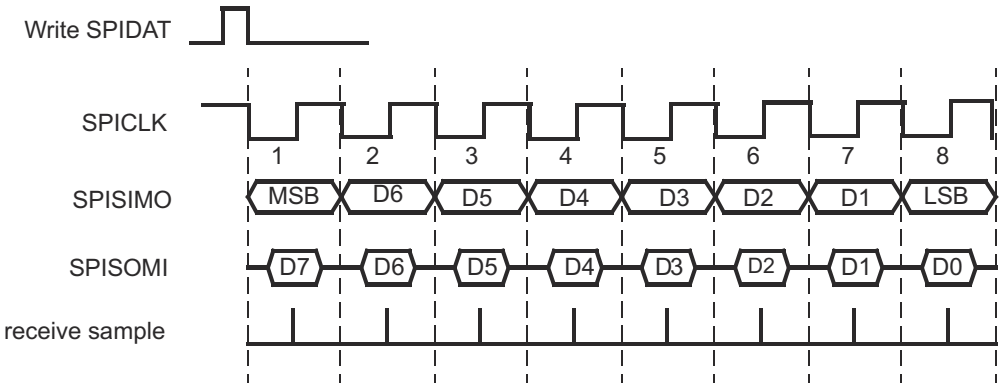

Data is output on the falling edge of SPICLK.
Input data is latched on the rising edge of SPICLK.

Figure 11-36. Clock Mode with Polarity = 1 and Phase = 0

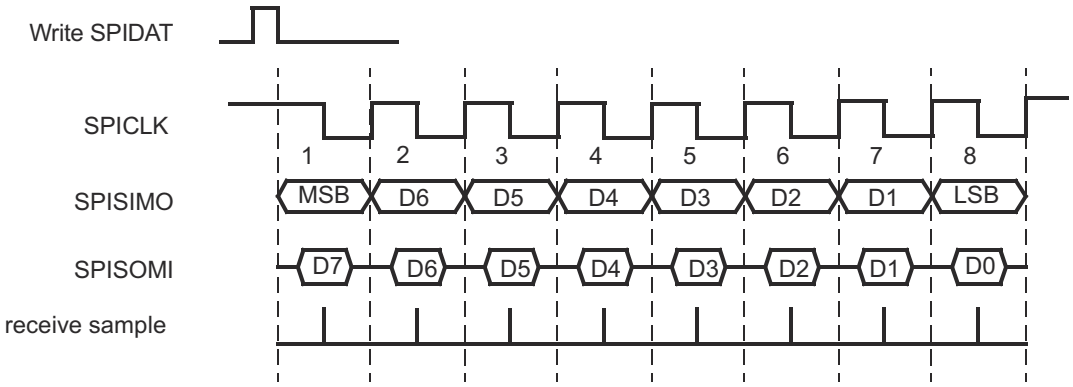

Data is output one-half cycle before the first falling edge of SPICLK and on the subsequent rising edges of SPICLK.
Input data is latched on the falling edge of SPICLK.

Figure 11-37. Clock Mode with Polarity = 1 and Phase = 1

Copyright © 2025 Texas Instruments Incorporated

11.1.4.2.8 Data Transfer Example

Figure 11-38 illustrates a SPI data transfer between two devices using a character length of five bits.

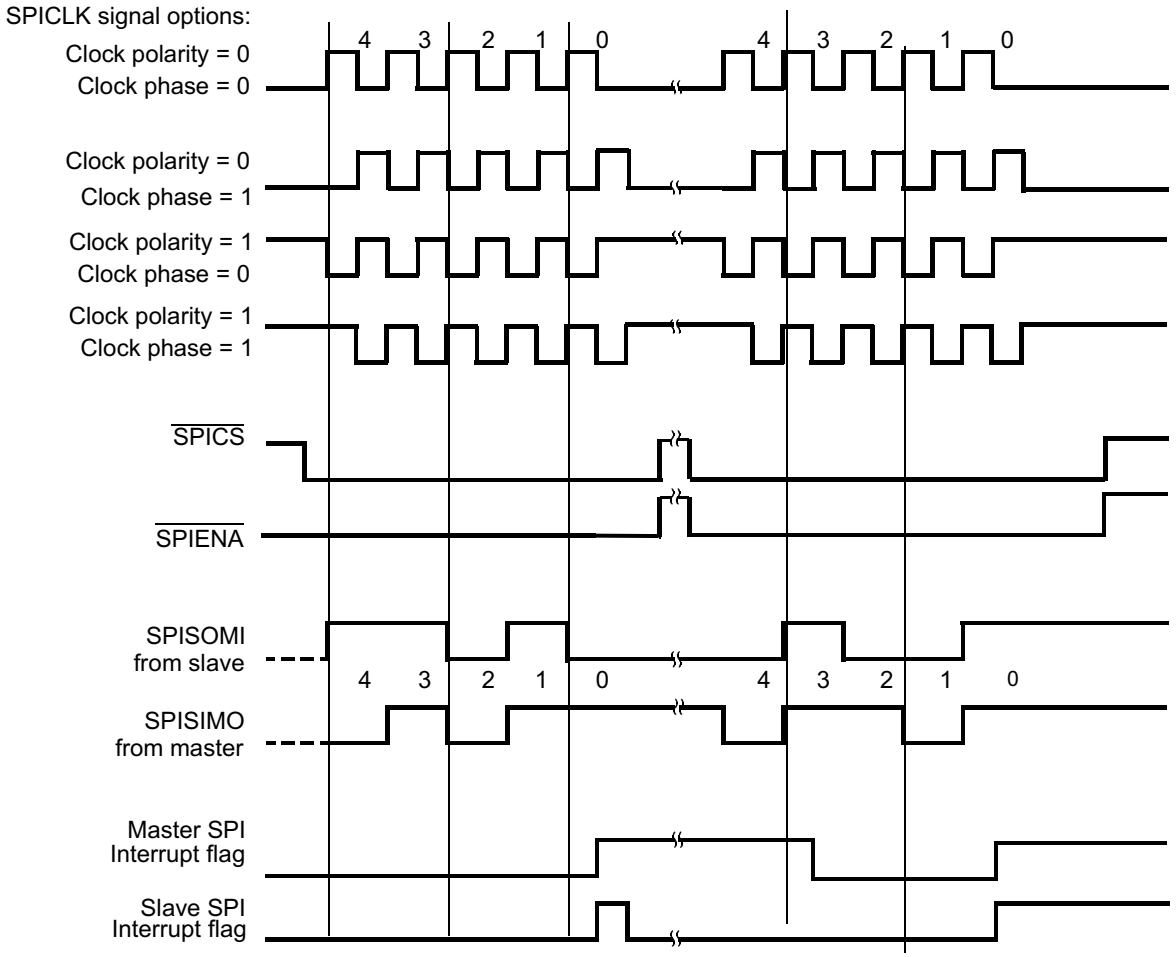

Figure 11-38. Five Bits per Character (5-Pin Option)

Copyright © 2025 Texas Instruments Incorporated

11.1.4.2.9 Decoded and Encoded Chip Select (Controller Only)

In this device, the SPI can connect to up to 6 individual peripheral devices using chip-selects by routing one wire to each peripheral. The 6 chip selects in the control field are directly connected to the 6 pins. The default value of each chip select (not active) can be configured via the register CSDEF. During a transmission, the value of the chip select control field (CSNR) of the SPIDAT1 register (SPIDAT1) is driven on the $\overline{\text{SPICS}}$ pins. When the transmission finishes, the default chip-select value (defined by the CSDEF register) is put on the $\overline{\text{SPICS}}$ pins.

The SPI can support more than 6 slaves by using encoded chip selects. To connect the SPI with encoded slaves devices, the CSNR field allows multiple active $\overline{\text{SPICS}}$ pins at the same time, which enables encoded chip selects from 0 to 16. To use encoded chip selects, all 6 chip select lines have to be connected to each peripheral device and each peripheral needs to have a unique chip-select address. The CSDEF register is used to provide the address at which slaves devices are all de-selected.

Users can combine decoded and encoded chip selects. For example, *n* $\overline{\text{SPICS}}$ pins can be used for encoding an *n*-bit address and the remaining pins can be connected to decoded-mode slaves.

11.1.4.2.10 Variable Chip Select Setup and Hold Timing (Controller Only)

In order to support slow peripheral devices, a delay counter can be configured to delay data transmission after the chip select is activated. A second delay counter can be configured to delay the chip select deactivation after the last data bit is transferred. Both delay counters are clocked with the peripheral clock (VCLK).

If a particular data format specifically does not require these additional set-up or hold times for the chip select pins, then they can be disabled in the corresponding SPIFMTx register.

11.1.4.2.11 Hold Chip-Select Active

Some peripheral devices require the chip select signal to be held continuously active during several consecutive data word transfers. Other peripheral devices require the chip select signal to be deactivated between consecutive data word transfers.

CSHOLD is programmable in both controller and peripheral modes of the multi-buffer mode of SPI. However, the meaning of CSHOLD in controller mode and peripheral mode are different.

Note

If the CSHOLD bit is set within the current data control field, the programmed hold time and the following programmed set-up time will not be applied between transactions.

11.1.4.2.11.1 CSHOLD Bit in Controller Mode

Each word in a controller-mode SPI can be individually initialized for one of the two modes via the CSHOLD bit in its control field.

If the CSHOLD bit is set in the control field of a word, the chip select signal will not be deactivated until the next control field is loaded with new chip select information. Since the chip-select is maintained active between two transfers, the chip-select hold delay (T2CDELAY) is not applied at the end of the current transaction, and the chip-select set-up time delay (C2TDELAY) is not applied as well at the beginning of the following transaction. However, the wait delay (WDELAY) will be still applied between the two transactions, if the WDEL bit is set within the control field.

Figure 11-39 shows the SPI pins when a controller-mode SPI transfers a word that has its CSHOLD bit set. The chip-select pins will not be deasserted after the completion of this word. If the next word to transmit has the same chip-select number (CSNR) value, the chip select pins will be maintained until the completion of the second word, regardless of whether the CSHOLD bit is set or not.

Copyright © 2025 Texas Instruments Incorporated

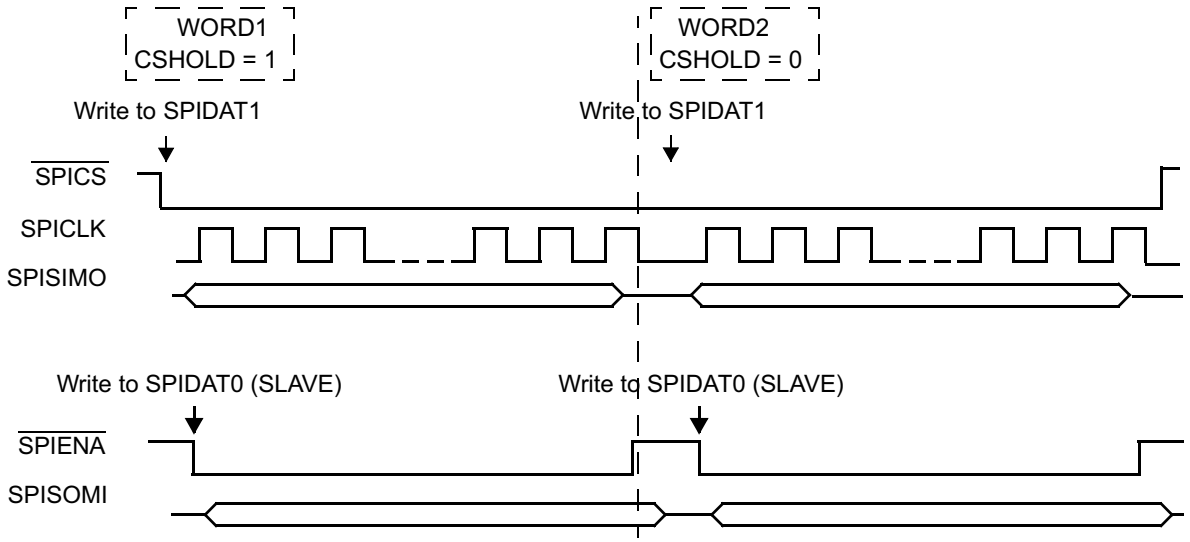

Figure 11-39. Typical Diagram when a Buffer in controller is in CSHOLD Mode (SPI-SPI)

11.1.4.2.11.2 CSHOLD Bit in Peripheral Mode (Multi-buffered Mode)

If the CSHOLD bit in a buffer is set to 1, then the MibSPI does not wait for the $\overline{\text{SPICS}}$ pins to be de-activated at the end of the shift operation to copy the received data to the receive RAM. With this feature, it is possible for a peripheral in multi-buffer mode to do multiple data transfers without requiring the $\overline{\text{SPICS}}$ pins to be deasserted between two buffer transfers.

If the CSHOLD bit in a buffer is cleared to 0 in a peripheral MibSPI, even after the shift operation is done, the MibSPI waits until the $\overline{\text{SPICS}}$ pin (if functional) is deasserted to copy the received data to the RXRAM.

If the CSHOLD bit is maintained as 0 across all the buffers, then the peripheral in multi-buffer mode requires its $\overline{\text{SPICS}}$ pins to be deasserted between any two buffer transfers; otherwise, the peripheral SPI will be unable to respond to the next data transfer.

Note

In compatibility mode, the peripheral does not require the $\overline{\text{SPICS}}$ pin to be deasserted between two buffer transfers. The CSHOLD bit of the peripheral will be ignored in compatibility mode.

11.1.4.2.12 Detection of Peripheral Desynchronization (Controller Only)

When a peripheral supports generation of an enable signal (ENA), desynchronization can be detected. With the enable signal a peripheral indicates to the controller that it is ready to exchange data. A desynchronization can occur if one or more clock edges are missed by the peripheral. In this case, the peripheral may block the SOMI line until it detects clock edges corresponding to the next data word. This would corrupt the data word of the desynchronized peripheral and the consecutive data word. A configurable 8-bit time-out counter (T2EDELAY), which is clocked with SPICLK, is implemented to detect this peripheral malfunction. After the transmission has finished (end of last bit transferred: either last data bit or parity bit) the counter is started. If the ENA signal generated by the peripheral does not become inactive before the counter overflows, the DESYNC flag is set and an interrupt is asserted (if enabled).

Copyright © 2025 Texas Instruments Incorporated

Note

Inconsistency of Desynchronization Flag in Compatibility Mode MibSPI

Because of the nature of this error, under some circumstances it is possible for a desync error detected for the previous buffer to be visible in the current buffer. This is due to the fact that receive completion flag/interrupt will be generated when the buffer transfer is completed. But desync will be detected after the buffer transfer is completed. So, if VBUS controller reads the received data quickly when an RXINT is detected, then the status flag may not reflect the correct desync condition. This inconsistency in the desync flag is valid only in compatibility mode of MibSPI. In multi-buffer mode, the desync flag is always assured to be for the current buffer.

11.1.4.2.13 ENA Signal Time-Out (Controller Only)

The SPI in controller mode waits for the hardware handshake signal (ENA) coming from the addressed peripheral before performing a data transfer. To avoid stalling the SPI by a non-responsive peripheral device, a time-out value can be configured using C2EDELAY. If the time-out counter overflows before an active ENA signal is sampled, the TIMEOUT flag in the status register SPIFLG is set and the TIMEOUT flag in the status field of the corresponding buffer is set.

Note

When the chip select signal becomes active, no breaks in transmission are allowed. The next arbitration is performed while waiting for the time-out to occur.

11.1.4.2.14 Data-Length Error

A SPI can generate an error flag by detecting any mismatch in length of received or transmitted data and the programmed character length under certain conditions.

Data-Length Error in Controller Mode: During a data transfer, if the SPI detects a de-assertion of the $\overline{\text{SPIENA}}$ pin (by the peripheral) while the character counter is not overflowed, then an error flag is set to indicate a data-length error. This can be caused by a peripheral receiving extra clocks (for example, due to noise on the SPICLK line).

Note

In a controller mode SPI, the data length error will be generated only if the $\overline{\text{SPIENA}}$ pin is enabled as a functional pin.

Data-Length Error in peripheral Mode: During a transfer, if the SPI detects a de-assertion of the $\overline{\text{SPICS}}$ pin before its character length counter overflows, then an error flag is set to indicate a data-length error. This situation can arise If the peripheral SPI misses one or more SPICLK pulses from the controller. This error in peripheral mode implies that both the transmitted and received data were not complete.

Note

In a peripheral mode SPI, the data-length error flag will be generated only if at least one of the $\overline{\text{SPICS}}$ pins are configured as functional, and are being used for selecting the peripheral.

11.1.4.2.15 Parallel Mode (Multiple PICO/POCI Support, not available on all devices)

In order to increase throughput, the parallel mode of the SPI enables the module to send data over more than one data line (parallel 2, 4, or 8). When parallel mode is used, the data length must be set as 16 bits. Only module MIBSPIP5 supports Parallel Mode.

This feature increases throughput by 2 for 2 pins, by 4 for 4 pins, or by 8 for 8 pins.

Parallel mode supports the following features:

Copyright © 2025 Texas Instruments Incorporated

- Scalable data lines (1, 2, 4, 8) per direction. (POCI and PICO lines)
- All clock schemes are supported (clock phase and polarity)
- Parity is supported. The parity bit will be transmitted on bit0 of the PICO/POCI lines. The receive parity is expected on bit0 of the POCI/PICO pins.

Parallel mode can be programmed using the PMODEx bits of SPIPMCTRL register. See Section 11.1.4.8.26 for details about this register.

After reset the parallel mode selection bits are cleared (single PICO/POCI lines).

11.1.4.2.15.1 Parallel Mode Block Diagram

Figure 11-40 and Figure 11-41 show the parallel connections to the SPI shift register.

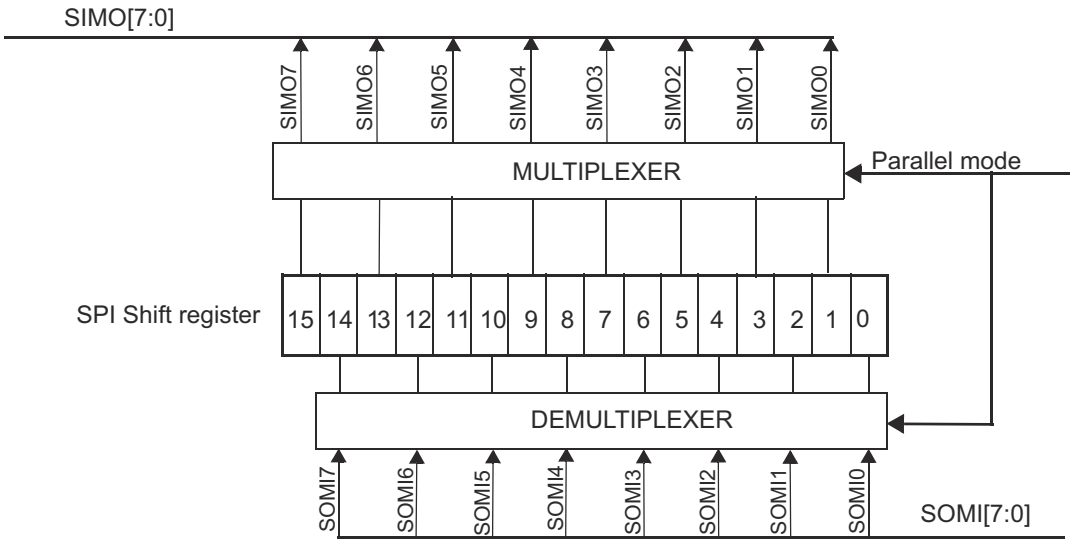

Figure 11-40. Block Diagram Shift Register, MSB First

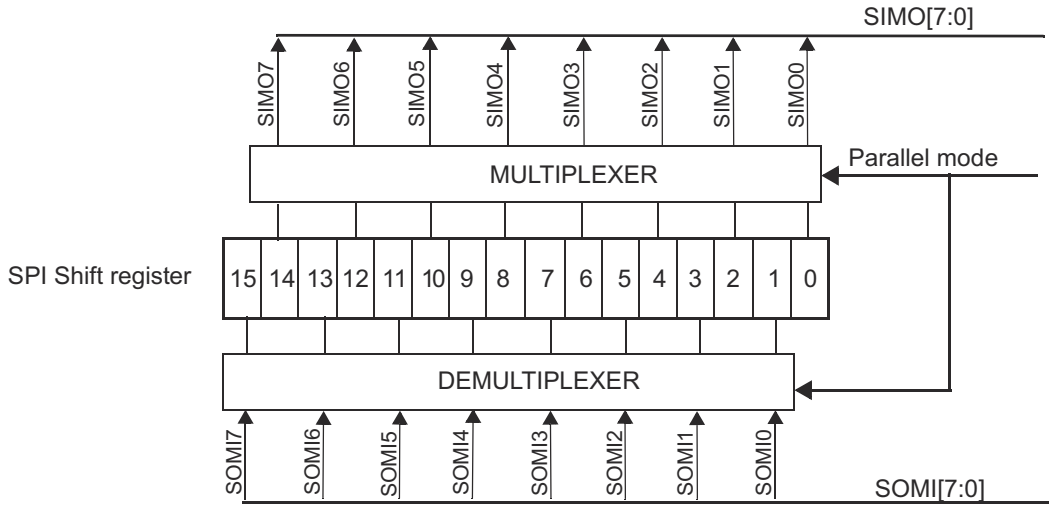

Figure 11-41. Block Diagram Shift Register, LSB First

Copyright © 2025 Texas Instruments Incorporated

11.1.4.2.15.2 Parallel Mode Pin Mapping, MSB First

Table 11-183 and Table 11-184 describe the POCI and PICO pin mapping when the SPI is used in parallel mode (1, 2, 4, 8) pin mode, MSB first.

Note

MSB-first or LSB-first can be configured using the SHIFTDIRx bit of the SPIFMTx registers.

Table 11-183. Pin Mapping for PICO Pin with MSB First

Parallel Mode	Shift Register Bit	PICO[7:0]
1	15	0
2	15	1
	7	0
4	15	3
	11	2
	7	1
	3	0
8	15	7
	13	6
	11	5
	9	4
	7	3
	5	2
	3	1
	1	0

Table 11-184. Pin Mapping for POCI Pin with MSB First

Parallel Mode	Shift Register Bit	POCI[7:0]
1	0	0
2	0	0
	8	1
4	0	0
	4	1
	8	2
	12	3
8	0	0
	2	1
	4	2
	6	3
	8	4
	10	5
	12	6
	14	7

Copyright © 2025 Texas Instruments Incorporated

11.1.4.2.15.3 Parallel Mode Pin Mapping, MSB-First, LSB-First

Table 11-185 and Table 11-186 describe the PICO and POCI pin mapping when SPI is used in parallel mode (1, 2, 4, 8) pin mode, LSB first.

Table 11-185. Pin Mapping for PICO Pin with LSB First

Parallel Mode	Shift Register Bit	PICO[7:0]
1	0	0
2	8	1
	0	0
4	12	3
	8	2
	4	1
	0	0
8	14	7
	12	6
	10	5
	8	4
	6	3
	4	2
	2	1
	0	0

Table 11-186. Pin Mapping for POCI Pin with LSB First

Parallel Mode	Shift Register Bit	POCI[7:0]
1	15	0
2	7	0
	15	1
4	3	0
	7	1
	11	2
	15	3
8	1	0
	3	1
	5	2
	7	3
	9	4
	11	5
	13	6
	15	7

Copyright © 2025 Texas Instruments Incorporated

11.1.4.2.15.4 2-Data Line Mode (MSB First, Phase 0, Polarity 0)

In 2-data line mode (controller mode) the shift register bits 15 and 7 will be connected to the pins PICO[1] and PICO[0], and the shift register bits 8 and 0 will be connected to the pins POCI[1] and POCI[0] or vice versa in peripheral mode. After writing to the SPIDAT0/SPIDAT1 register, the bits 15 and 7 will be output on PICO[1] and PICO[0] on the rising edge if SPICLK. With the falling clock edge of the SPICLK, the received data on POCI[1] and POCI[0] will be latched to the shift register bits 8 and 0. The subsequent rising edge of SPICLK will shift the data in the shift register by 1 bit to the left. (PICO[1] will shift the data out from bit 15 to 8, PICO[0] will shift the data out from bit 7 to 0). After eight SPICLK cycles, when the full data word is transferred, the shift register (16 bits) is copied to the receive buffer, and the RXINT flag will be set. Figure 11-42 shows the clock/data diagram of the 2-data line mode. Figure 11-43 shows the timing of a two-pin parallel transfer.

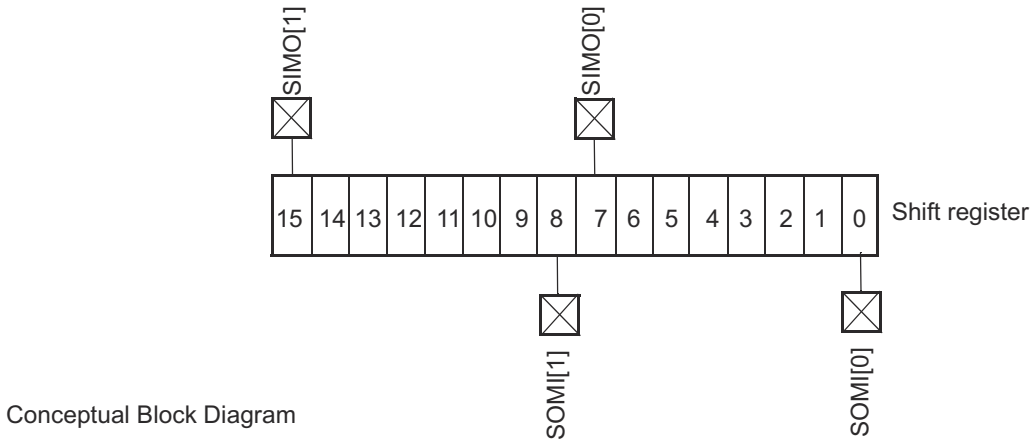

Figure 11-42. 2-data Line Mode (Phase 0, Polarity 0)

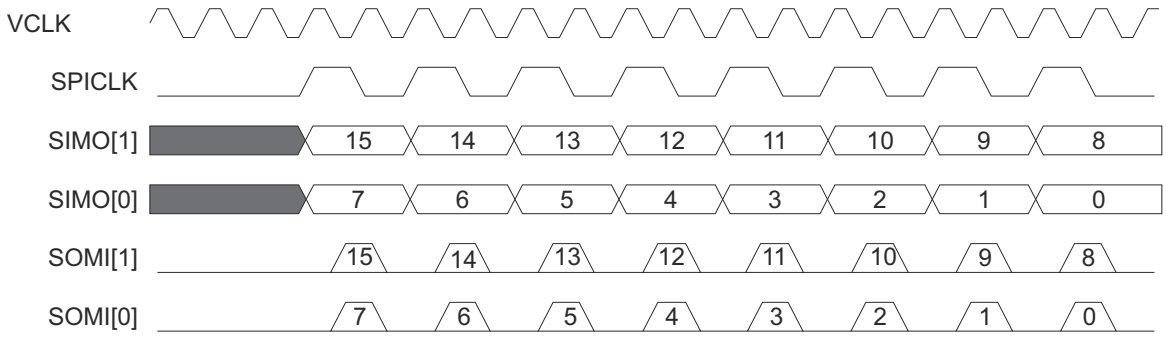

Figure 11-43. Two-Pin Parallel Mode Timing Diagram (Phase 0, Polarity 0)

Copyright © 2025 Texas Instruments Incorporated

11.1.4.2.15.5 4-Data Line Mode (MSB First, Phase 0, Polarity 0)

In 4-data line mode (controller mode) the shift register bits 15, 11, 7, and 3 will be connected to the pins SIMO[3], SIMO[2], SIMO[1], and SIMO[0], and the shift register bits 12, 8, 4, and 0 will be connected to the pins SOMI[3], SOMI[2], SOMI[1], and SOMI[0] (or vice versa in peripheral mode). After writing to SPIDAT1/SPIDAT0, the bits 15, 11, 7, and 3 will be output on SIMO[3], SIMO[2], SIMO[1], and SIMO[0] on the rising edge of SPICLK. With the falling clock edge of the SPICLK, the received data on SOMI[3], SOMI[2], SOMI[1] and SOMI[0] will be latched to shift register bits 12, 8, 4, and 0. The subsequent rising edge of SPICLK will shift data in the shift register by 1 bit to the left (SIMO[3] will shift the data out from bit 15 to 12, SIMO[2] will shift the data out from bit 11 to 8, SIMO[1] will shift the data out from bit 7 to 4, SIMO[0] will shift the data out from bit 3 to 0). After four SPICLK cycles, when the full data word is transferred, the shift register (16 bits) is copied to the receive buffer, and the RXINT flag will be set.

Figure 11-44 shows the clock/data diagram of the four-data line mode. Figure 11-45, shows the timing diagram for four-data line mode.

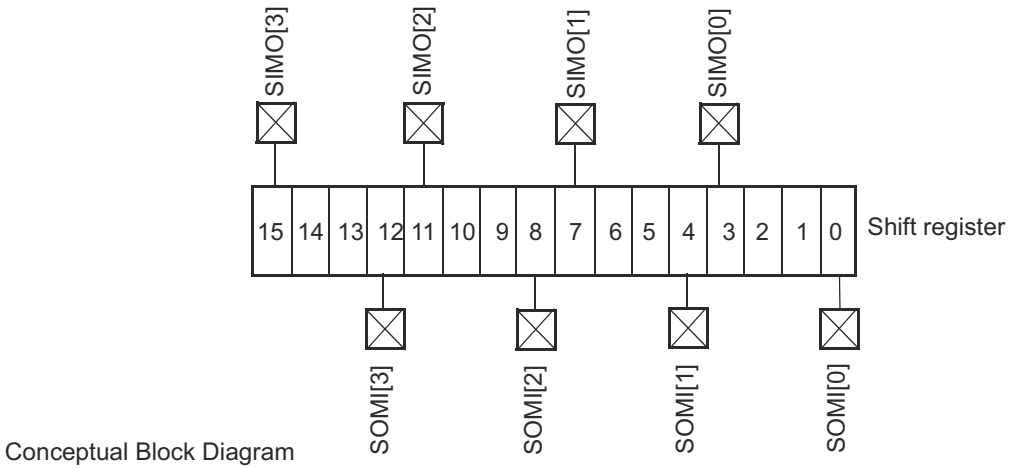

Figure 11-44. 4-Data Line Mode (Phase 0, Polarity 0)

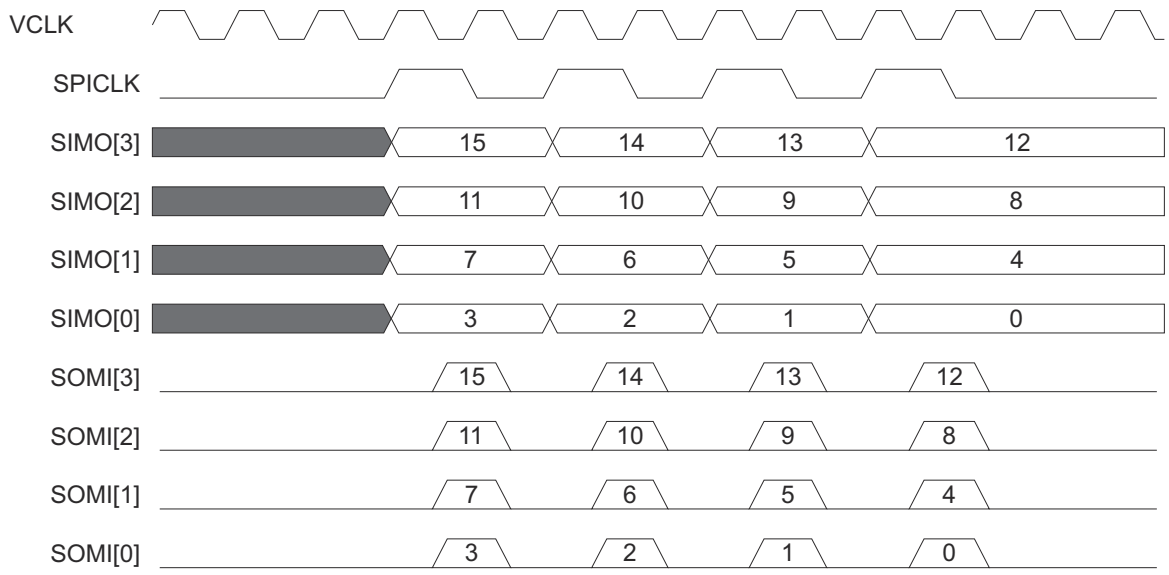

Figure 11-45. 4 Pins Parallel Mode Timing Diagram (Phase 0, Polarity 0)

Copyright © 2025 Texas Instruments Incorporated

11.1.4.2.15.6 8-Data Line Mode (MSB First, Phase 0, Polarity 0)

In 8-data line mode (controller mode) the shift register bits 15, 13, 11, 9, 7, 5 and 3 will be connected to the pins PICO[7], PICO[6], PICO[5], PICO[4], PICO[3], PICO[2], PICO[1], and PICO[0], and the shift-register bits 14, 12, 10, 8, 6, 4, and 0 will be connected to the pins POCI[7], POCI[6], POCI[5], POCI[4], POCI[3], POCI[2], POCI[1], and POCI[0] (or vice versa in peripheral mode).

After writing to SPIDAT0/SPIDAT1, the bits 15, 13, 11, 9, 7, 5, 3, and 1 will be output on PICO[7], PICO[6], PICO[5], PICO[4], PICO[3], PICO[2], PICO[1], and PICO[0], on the rising edge of SPICLK. On the falling clock edge of the SPICLK, the received data on POCI[8], POCI[7], POCI[6],POCI[5], POCI[4], POCI[3], POCI[2], POCI[1], and POCI[0] will be latched to the shift register bits 14, 12, 10, 8, 6, 4, 2, and 0.

The subsequent rising edge of SPICLK will shift the data in the shift register by 1 bit to the left. After two SPICLK cycles, when the full data word is transferred the shift register (16 bits) is copied to the receive buffer, and the RXINT flag will be set. Figure 11-46 shows the clock/data diagram of the 8-data line mode. Figure 11-47 shows the pin timings for 8-data line mode.

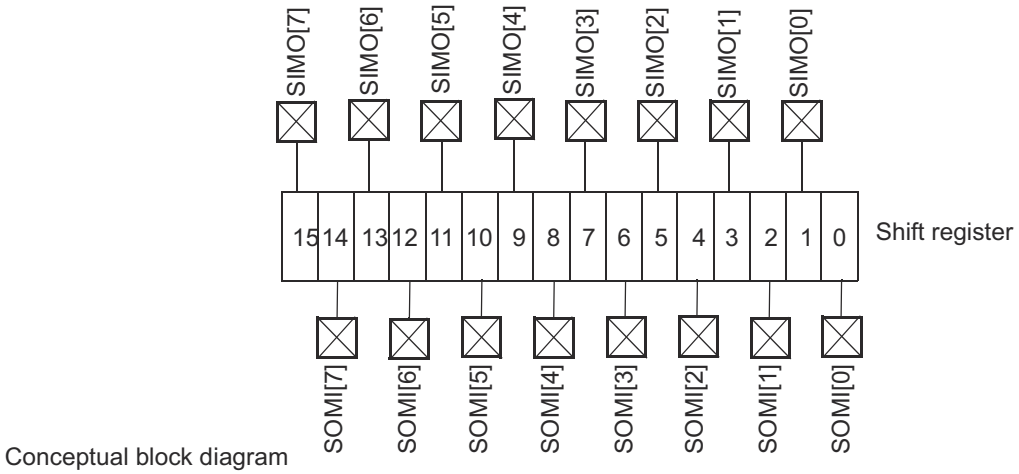

Figure 11-46. 8-data Line Mode (Phase 0, Polarity 0)

Note

Parity Support

Using the parity support in parallel mode may seriously affect throughput. For an eight-line mode to transfer 16 bits of data, only two SPICLK pulses are enough. If parity is enabled, one extra SPICLK pulse will be used to transfer and receive the parity bit. Parity will be transmitted and received on the 0th line regardless of 1/2/4/8-line modes. During the parity bit transfer, other data bits are not valid.

Copyright © 2025 Texas Instruments Incorporated

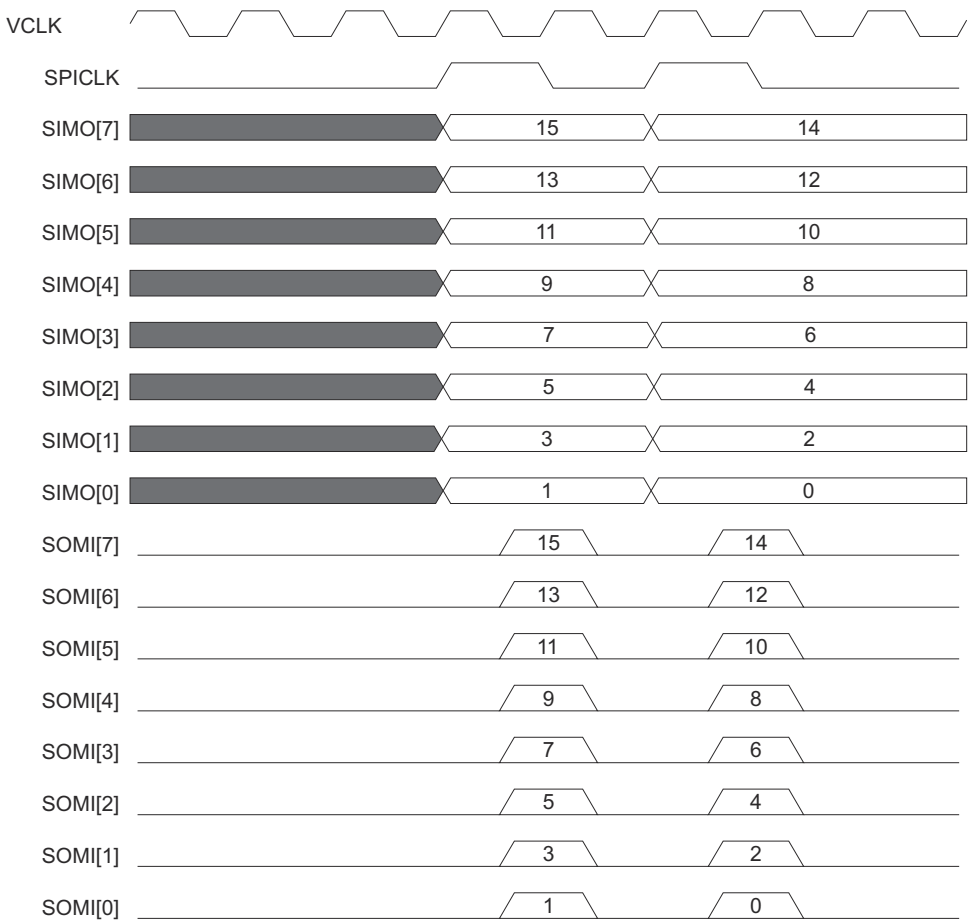

Figure 11-47. 8 Pins Parallel Mode Timing Diagram (Phase 0, Polarity 0)

Note

Modulo Count Parallel Mode is not supported in this device.

Copyright © 2025 Texas Instruments Incorporated

11.1.4.2.16 Continuous Self-Test (Controller/Peripheral)

During data transfer, the SPI compares its own internal transmit data with its transmit data on the bus. The sample point for the compare is at one-half SPI clock after transmit point. If the data on the bus does not match the expected value, the bit-error (BITERR) flag is set and an interrupt is asserted if enabled.

Note

The compare is made from the output pin using its input buffer.

11.1.4.2.17 Half Duplex Mode

SPI by protocol is Full Duplex in nature, which means simultaneous TX and RX operations happen on two separate data pins, SIMO and SOMI. However, it is possible to use SPI/MibSPI to do the TX-only operation (ignoring the RX data) and the RX-only operation (using dummy TX data and ignoring the TX pin). But this requires that both SOMI and SIMO lines are bonded out in a chip to be able to support both TX-only or RX-only features.

11.1.4.2.17.1 Half Duplex Mode in Master

The Half Duplex Mode gives an additional flexibility to use the SIMO pin, which is normally used as a TX pin in Controller mode, to work like an RX pin while the HDUPLEX_ENAx bit in SPIFMTx register is set to 1. In Half Duplex Controller mode, the SIMO pin acts as an RX pin. Switching between Full Duplex and Half Duplex can be achieved using the SPIFMTx register being selected using the DFSEL bit of SPIDAT1 register or TXRAM locations.

11.1.4.2.17.2 Half Duplex Mode in Peripheral

In Half Duplex Peripheral mode, the SIMO pin, which is normally an RX pin, acts as a TX pin while the HDUPLEX_ENAx bit in SPIFMTx register is set to 1. In Half Duplex Peripheral mode, the SIMO pin acts as a TX pin. Switching between Full Duplex and Half Duplex can be achieved using the SPIFMTx register being selected using the DFSEL bit of SPIDAT1 register or TXRAM locations.

11.1.4.3 Test Features

11.1.4.3.1 Internal Loop-Back Test Mode (Controller Only)

The internal loop-back self-test mode can be utilized to test the SPI transmit and receive paths, including the shift registers, the SPI buffer registers, and the parity generator. In this mode the transmit signal is internally feedback to the receiver, whereas the SIMO, SOMI, and CLK pin are disconnected; that is, the transmitted data is internally transferred to the corresponding receive buffer while external signals remain unchanged.

This mode allows the CPU to write into the transmit buffer, and check that the receive buffer contains the correct transmit data. If an error occurs the corresponding error is set within the status field.

Note

This mode cannot be changed during transmission.

Copyright © 2025 Texas Instruments Incorporated

11.1.4.3.2 Input/Output Loopback Test Mode

Input/Output Loopback Test mode supports the testing of all Input/Output pins without the aid of an external interface. Loopback can be configured as either analog-loopback (loopback through the pin-level input/output buffers) or digital loopback (internal to the SPI module). With Input/Output Loopback, all functional features of the SPI can be tested. Transmit data is fed back through the receive-data line(s). See Figure 11-48 for a diagram of the types of feedback available. The IOLPBKTSTCR register defines all of the available control fields.

In loopback mode, it is also possible to induce various error conditions. See Section 11.1.4.8.44 for details of the register field controlling these features.

In Input/Output loopback test modes, even when the module is in slave mode, the SPICLK is generated internally. This SPICLK is used for all loopback-mode SPI transactions. Peripheral-mode features can be tested without the help of another controller SPI, using the internally-generated SPICLK. Chip selects are also generated by the slave itself while it is in Input/Output loopback mode.

In Input/Output loopback test modes, if the module is in controller mode, the $\overline{\text{ENA}}$ signal is also generated by internal logic so that an external interface is not required.

Note

Usage Guideline for Input/Output Loopback

Input/Output Loopback mode should be used with caution because, in some configurations, even the receive pins will be driven with transmit data. During testing, it should be ensured that none of the SPI pins are driven by any other device connected to them. Otherwise, if analog loopback is selected in I/O Loopback mode, then testing may damage the device.

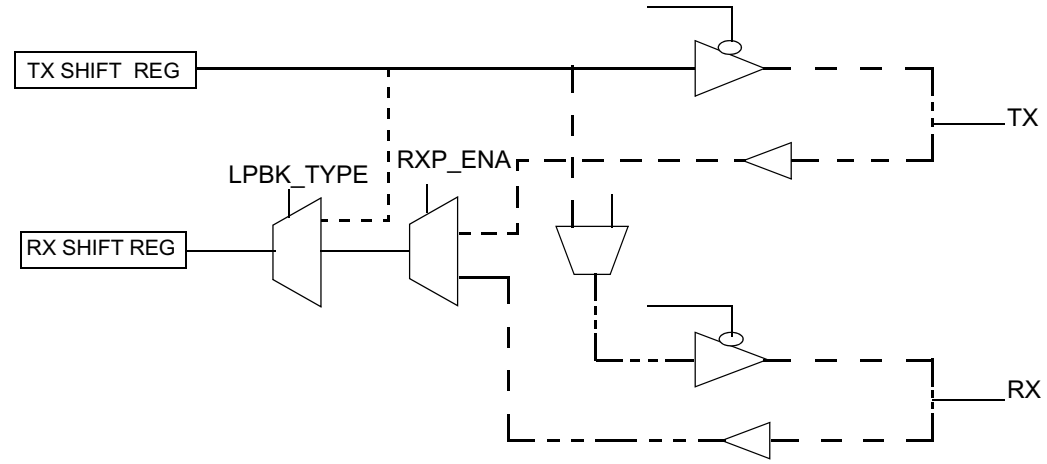

This diagram is intended to illustrate loopback paths and therefore may omit some normal-mode paths.

Figure 11-48. I/O Paths during I/O Loopback Modes

Copyright © 2025 Texas Instruments Incorporated

11.1.4.3.2.1 Input/Output Loopback Mode Operation in Peripheral Mode

In multi-buffer slave mode, there are some additional requirements for using I/O loopback mode (IOLPBK). In multi-buffer peripheral mode, the chip-select pins are the triggers for various TGs. Enabling the IOLPBK mode by writing 0xA to the IOLPBTSTENA bits of the IOLPBKTSTCR register triggers TG0 by driving $\overline{\text{SPICS}}$ to 0. The actual number of chip selects can be programmed to have any or all of the $\overline{\text{SPICS}}$ pins as functional. All other configurations should be completed before enabling the IOLPBK mode in multi-buffer peripheral mode since it triggers TG0.

After the first buffer transfer is completed, the CSNR field of the current buffer is used to trigger the next buffer. So, if multiple TGs are desired to be tested, then the CSNR field of the final buffer in each TG should hold the number of the next TG to be triggered. As long as TG boundaries are well defined and are enabled, the completion of one TG will trigger the next TG.

To stop the transfer in multi-buffer peripheral mode in I/O Loopback configuration, either IOLPBK mode can be disabled by writing 0x5 to the IOLPBTSTENA bits or all of the TGs can be disabled.

11.1.4.4 General-Purpose I/O

All of the SPI pins may be programmed via the SPIPCx control registers to be either functional or general-purpose I/O pins.

If the SPI function is to be used, application software must ensure that at least the SPICLK pin and the SOMI and/or SIMO pins are configured as SPI functional pins, and not as GIO pins, or else the SPI state machine will be held in reset, preventing SPI transactions.

SPI pins support:

- internal pull-up resistors
- internal pull-down resistors
- open-drain or push-pull mode

Copyright © 2025 Texas Instruments Incorporated

11.1.4.5 Interrupts

There are two levels of vectorized interrupts supported by the SPI. These interrupts can be caused under the following circumstances:

- Transmission error
- Receive overrun
- Receive complete (receive buffer full)
- Transmit buffer empty

These interrupts may be enabled or disabled via the SPIINT0 register.

During transmission, if one of the following errors occurs: BITERR, DESYNC, DLENERR, PARITYERR, or TIMEOUT, the corresponding bit in the SPIFLG register is set. If the corresponding enable bit is set, then an interrupt is generated. The level of all the above interrupts is set by the bit fields in the SPILVL register.

The error interrupts are enabled and prioritized independently from each other, but the interrupt generated will be the same if multiple errors are enabled on the same level. The SPIFLG register should be used to determine the actual cause of an error.

Note

Since there are two interrupt lines, one each for Level 0 and Level 1, it is possible for a programmer to separate out the interrupts for receive buffer full and transmit buffer empty. By programming one to Level 0 and the other to Level 1, it is possible to avoid a check on whether an interrupt occurred for transmit or for receive. A programmer can also choose to group all of the error interrupts into one interrupt line and both TX-empty and RX-full interrupts into another interrupt line using the LVL control register. In this way, it is possible to separate error-checking from normal data handling.

11.1.4.5.1 Interrupts in Multi-Buffer Mode

In multi-buffer mode, the SPI can generate interrupts on two levels.

In normal multi-buffer operation, the receive and transmit are not used and therefore the enable bits of SPIINT0 are not used.

The interrupts available in multi-buffer mode are:

- Transmission error interrupt
- Receive overrun interrupt
- TG suspended interrupt
- TG completed interrupt

When a TG has finished and the corresponding enable bit in the TGINTENA register is set, a transfer-finished interrupt is generated. The level of priority of the interrupt is determined by the corresponding bit in the TGINTLVL register.

When a TG is suspended by a buffer that has been set as suspend to wait until TXFULL flag or/and RXEMPTY flag are set, and if the corresponding bit in the TGINTENA register is set, an transfer-suspended interrupt is generated. The level of priority of the interrupt is determined by the corresponding bit in the TGINTLVL register.

Figure 11-49 illustrates the TG interrupts.

Copyright © 2025 Texas Instruments Incorporated

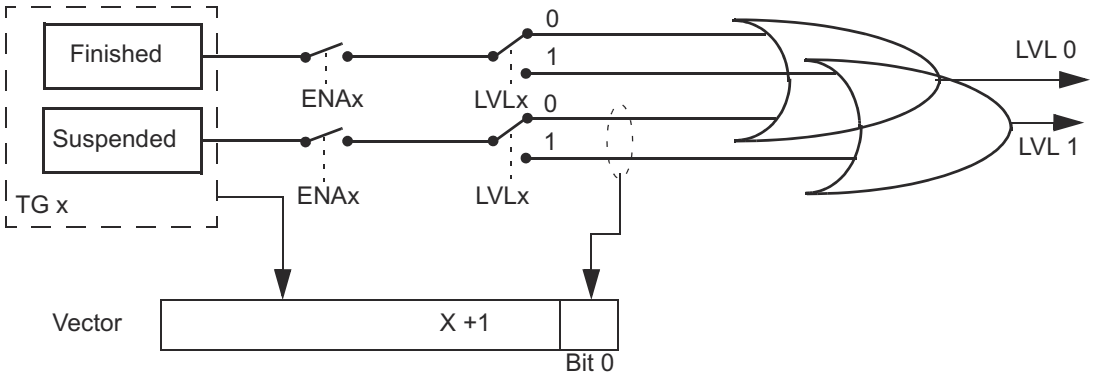

Figure 11-49. TG Interrupt Structure

During transmission, if one of the following errors occurs, BITERR, DESYNC, PARITYERR, TIMEOUT, DLENERR, the corresponding flag in the SPIFLG register is set. If the enable bit is set, then an interrupt is generated. The level of the interrupts could be generated according to the bit field in SPILVL register.

The RXOVRN interrupt is generated when a buffer in the RXRAM is overwritten by a new received word. While writing newly received data to a RXRAM location, if the RXEMPTY bit of the corresponding location is 0, then the RXOVR bit will be set to 1 during the write operation, so that the buffer starts to indicate an overrun. This RXOVR flag is also reflected in SPIFLG register as RXOVRNINTFLG and the corresponding vector number is updated in TGINTVECT0/TGINTVECT1 register. If an overrun interrupt is enabled, then an interrupt will be generated indicating an overrun condition.

The error interrupts are enabled and prioritized independently from each other, but the vector generated by the SPI will be the same if multiple errors are enabled on the same level.

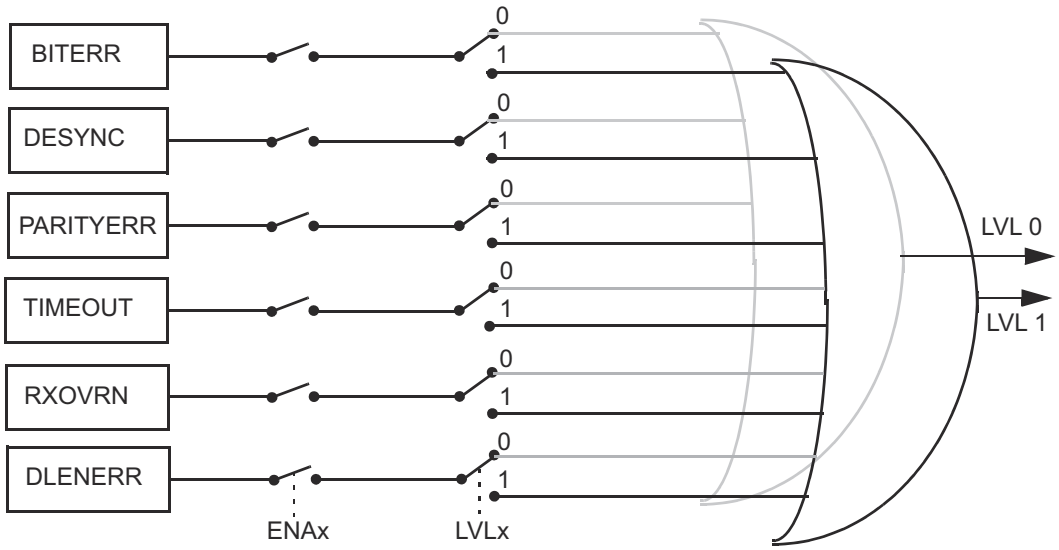

Figure 11-50. SPIFLG Interrupt Structure

Since the priority of an error interrupt is lower than a completion/suspend interrupt for a TG, the interrupts can be split into two levels. By programming all the error interrupts into Level 0 and TG-complete / TG-suspend interrupts into Level 1, it is possible to get a clear indication of the source of error interrupts. However, when a vector register shows an error interrupt, the actual buffer for which the error has occurred is not readily identifiable. Since each buffer in the multi-buffer RAM is stored along with its individual status flags, each buffer should be read until a buffer with any error flag set is found.

Copyright © 2025 Texas Instruments Incorporated

A separate interrupt line is provided to indicate the uncorrectable error condition in the MibSPI. This line is available (and valid) only in the multi-buffer mode of the MibSPI module and if the parity error detection feature for multi-buffer RAM is enabled.

Copyright © 2025 Texas Instruments Incorporated

11.1.4.6 DMA Interface

In order to reduce CPU overhead in handling SPI message traffic on a character-by-character basis, SPI can use the DMA controller to transfer the data. The DMA request enable bit (DMA REQ EN) controls the assertion of requests to the DMA controller module. When a character is being transmitted or received, the SPI will signal the DMA via the DMA request signals, TX_DMA_REQ and RX_DMA_REQ. The DMA controller will then perform the required data transfer.

For efficient behavior during DMA operations, the transmitter empty and receive-buffer full interrupts can be disabled. For specific DMA features, see the DMA controller specification.

The SPI generates a request on the TX_DMA_REQ line each time the TX data is copied to the TX shift register either from the TXBUF or from peripheral data bus (when TXBUF is empty).

The first TX_DMA_REQ pulse is generated when either of the following is true:

- DMAREQEN (SPIINT0[16]) is set to 1 while SPIEN (SPIGCR1[24]) is already 1.
- SPIEN (SPIGCR1[24]) is set to 1 while DMAREQEN (SPIINT0[16]) is already 1.

The SPI generates a request on the RX_DMA_REQ line each time the received data is copied to the SPIBUF.

11.1.4.6.1 DMA in Multi-Buffer Mode

The MibSPI provides sophisticated programmable DMA control logic that completely eliminates the necessity of CPU intervention for data transfers, once programmed. When the multi-buffer mode is used, the DMA enable bit in the SPIINT0 register is ignored. DMA source or destination should be only the multi-buffer RAM and not SPIDAT0 / SPIDAT1 or SPIBUF register as in case of compatibility mode DMA.

The MibSPI offers up to eight DMA channels (for SEND and RECEIVE). All of the DMA channels are programmable individually and can be hooked to any buffer. The MibSPI provides up to 16 DMA request lines, and DMA requests from any channel can be programmed to be routed through any of these 16 lines. A DMA transfer can trigger both transmit and receive.

Each DMA channel has the capability to transfer a block of up to 32 data words without interruption using only one buffer of the array by configuring the DMAxCTRL register. Using the DMAxCOUNT and DMACTNTLEN register, up to 65535 (64K) words of data can be transferred without any interruption using just one buffer of the array. This enables the transfer of memory blocks from or into an external SPI memory.

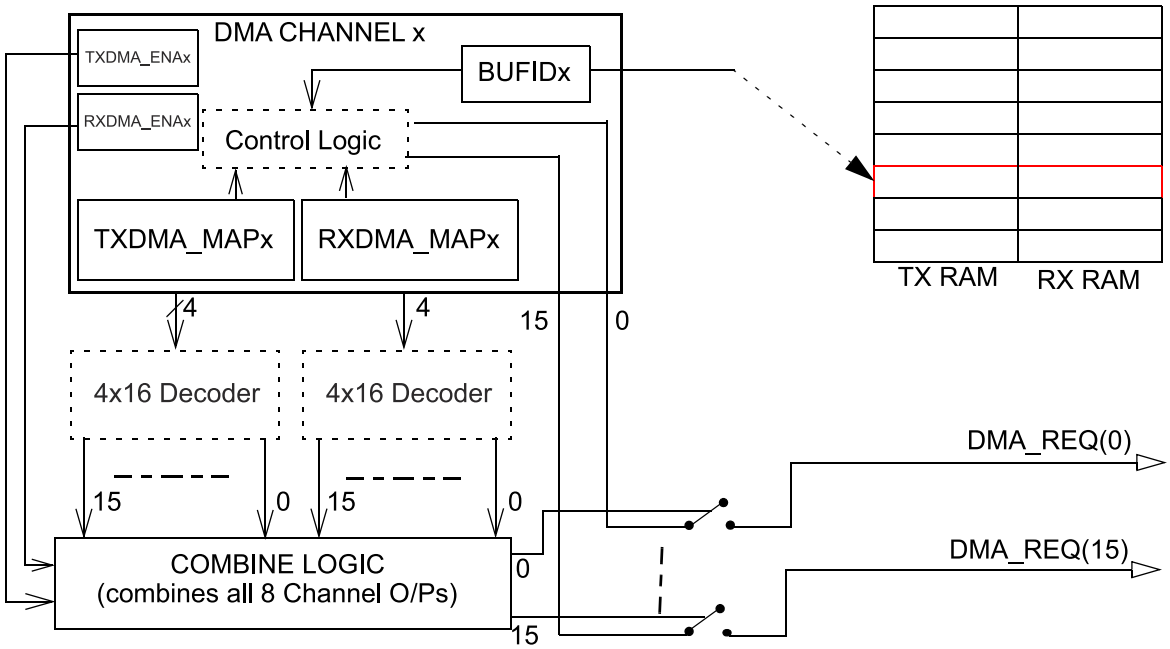

Figure 11-51. DMA Channel and Request Line (Logical) Structure in Multi-buffer Mode

Copyright © 2025 Texas Instruments Incorporated

11.1.4.7 Module Configuration

MibSPI/MibSPIP can be configured to function as Normal SPI and Multi-buffered SPI. Upon power-up or a system-level reset, each bit in the module registers is set to a default state. The registers are writable only after the RESET bit is set to 1.

11.1.4.7.1 Compatibility (SPI) Mode Configuration

The following list details the configuration steps that software should perform prior to the transmission or reception of data. As long as the SPIEN bit in the Global Control Register 1 (SPIGCR1) is cleared to 0 the entire time that the SPI is being configured, the order in which the registers are programmed is not important.

- Enable SPI by setting RESET bit.
- Configure the SIMO, SOMI, SPICLK, and optional $\overline{\text{SPICS}}$ and $\overline{\text{SPIENA}}$ pins for SPI functionality by setting the corresponding bit in SPIPC0 register.
- Configure the module to function as Controller or Peripheral using CLKMOD and MASTER bits.
- Configure the required SPI data format using SPIFMTx register.
- If the module is selected to function as Controller, the delay parameters can be configured using SPIDELAY register.
- Enable the Interrupts using SPIINT0 register if required.
- Select the chip select to be used by setting CSNR bits in SPIDAT1 register.
- Configure CSHOLD and WDEL bits in SPIDAT1 register if required.
- Select the Data word format by setting DFSEL bits. Select the Number of the configured SPIFMTx register (0 to 3) to used for the communication.
- Set LOOPBACK bit to connect the transmitter to the receiver internally. (This feature is used to perform a self-test. Do not configure for normal communication to external devices).
- Set SPIEN bit to 1 after the SPI is configured.
- Perform Transmit and receive data, using SPIDAT1 and SPIBUF register.
- You must wait for TXFULL to reset or TXINT before writing next data to SPIDAT1 register.
- You must wait for RXEMPTY to reset or RXINT before reading the data from SPIBUF register.

Copyright © 2025 Texas Instruments Incorporated

11.1.4.7.2 MibSPI Mode Configuration

The following list details the configuration steps that software should perform prior to the transmission or reception of data in MIBSPI mode. As long as the SPIEN bit in the Global Control Register 1 (SPIGCR1) is cleared to 0 the entire time that the SPI is being configured, the order in which the registers are programmed is not important.

- Enable SPI by setting RESET bit.
- Set MSPIENA bit to 1 to get access to multi-buffer mode registers.
- Configure the SIMO, SOMI, SPICLK, and optional $\overline{\text{SPICS}}$ and $\overline{\text{SPIENA}}$ pins for SPI functionality by setting the corresponding bit in SPIPC0 register.
- Configure the module to function as Controller or Peripheral using CLKMOD and MASTER bits.
- Configure the required SPI data format using SPIFMTx register.
- If the module is selected to function as Controller, the delay parameters can be configured using SPIDELAY register.
- Check for BUFINITACTIVE bit to be active before configuring MIBSPI RAM. (From Device Power On it take Number of Buffers × Peripheral clock period to initialize complete RAM.)
- Enable the Transfer Group interrupts using TGITENST register if required.
- Enable error interrupts using SPIINT0 register if required.
- Set SPIEN bit to 1 after the SPI is configured.
- The Trigger Source, Trigger Event, Transfer Group start address for the corresponding Transfer groups can be configured using the corresponding TGxCTRL register.
- Configure LPEND to specify the end address of the last TG.
- Similar to SPIDAT1 register, the 16 bit control fields in every TXRAM buffer in the TG have to be configured.
- Configure one of the eight BUFMODE available for each buffer.
- Fill the data to be transmitted in TXDATA field in TXRAM buffers.
- Configure TGENA bit to enable the required Transfer groups. (In case of Trigger event always setting TGENA will trigger the transfer group).
- At the occurrence of the correct trigger event, the Transfer group will be triggered and data gets transmitted and received one after the other with out any CPU intervention.
- You can poll Transfer Group interrupt flag or wait for a transfer-completed interrupt to read and write new data to the buffers.

Copyright © 2025 Texas Instruments Incorporated

11.1.4.8 Control Registers

This section describes the SPI control, data, and pin registers. The registers support 8-bit, 16-bit and 32-bit writes. The offset is relative to the associated base address of this module in a system.

Note

TI highly recommends that write values corresponding to the reserved locations of registers be maintained as 0 consistently. This allows future enhancements to use these reserved bits as control bits without affecting the functionality of the module with any older versions of software.

Table 11-187. SPI Registers

Offset	Acronym	Register Description	Section
00h	SPIGCR0	SPI Global Control Register 0	Section 11.1.4.8.1
04h	SPIGCR1	SPI Global Control Register 1	Section 11.1.4.8.2
08h	SPIINT0	SPI Interrupt Register	Section 11.1.4.8.3
0Ch	SPILVL	SPI Interrupt Level Register	Section 11.1.4.8.4
10h	SPIFLG	SPI Flag Register	Section 11.1.4.8.5
14h	SPIPC0	SPI Pin Control Register 0	Section 11.1.4.8.6
18h	SPIPC1	SPI Pin Control Register 1	Section 11.1.4.8.7
1Ch	SPIPC2	SPI Pin Control Register 2	Section 11.1.4.8.8
20h	SPIPC3	SPI Pin Control Register 3	Section 11.1.4.8.9
24h	SPIPC4	SPI Pin Control Register 4	Section 11.1.4.8.10
28h	SPIPC5	SPI Pin Control Register 5	Section 11.1.4.8.11
2Ch	SPIPC6	SPI Pin Control Register 6	Section 11.1.4.8.12
30h	SPIPC7	SPI Pin Control Register 7	Section 11.1.4.8.13
34h	SPIPC8	SPI Pin Control Register 8	Section 11.1.4.8.14
38h	SPIDAT0	SPI Transmit Data Register 0	Section 11.1.4.8.15
3Ch	SPIDAT1	SPI Transmit Data Register 1	Section 11.1.4.8.16
40h	SPIBUF	SPI Receive Buffer Register	Section 11.1.4.8.17
44h	SPIEMU	SPI Emulation Register	Section 11.1.4.8.18
48h	SPIDELAY	SPI Delay Register	Section 11.1.4.8.19
4Ch	SPIDEF	SPI Default Chip Select Register	Section 11.1.4.8.20
50h-5Ch	SPIFMT0-SPIFMT3	SPI Data Format Registers	Section 11.1.4.8.21
60h	INTVECT0	Interrupt Vector 0	Section 11.1.4.8.22
64h	INTVECT1	Interrupt Vector 1	Section 11.1.4.8.24
68h	SPIPC9(1)	SPI Pin Control Register 9	Section 11.1.4.8.25
6Ch	SPIPMCTRL	Parallel/Modulo Mode Control Register	Section 11.1.4.8.26

Copyright © 2025 Texas Instruments Incorporated

Table 11-187. SPI Registers (continued)

Offset	Acronym	Register Description	Section
70h	MIBSPIE	Multi-buffer Mode Enable Register	Section 11.1.4.8.27
74h	TGITENST	TG Interrupt Enable Set Register	Section 11.1.4.8.28
78h	TGITENCR	TG Interrupt Enable Clear Register	Section 11.1.4.8.29
7Ch	TGITLVST	Transfer Group Interrupt Level Set Register	Section 11.1.4.8.30
80h	TGITLVCR	Transfer Group Interrupt Level Clear Register	Section 11.1.4.8.31
84h	TGINTFLG	Transfer Group Interrupt Flag Register	Section 11.1.4.8.32
88h-8Ch	Reserved	Reserved	
90h	TICKCNT	Tick Count Register	Section 11.1.4.8.33
94h	LTGPEND	Last TG End Pointer	Section 11.1.4.8.34
98h-D4h	TGxCTRL	TGx Control Registers	Section 11.1.4.8.35
D8h-F4h	DMAxCTRL	DMA Channel Control Register	Section 11.1.4.8.36
F8h-114h	ICOUNT	DMAxCOUNT Register	Section 11.1.4.8.37
118h	DMACNTLEN	DMA Large Count	Section 11.1.4.8.38
11Ch	Reserved	Reserved	
120h	UERRCTRL	Multi-buffer RAM Uncorrectable Parity Error Control Register	Section 11.1.4.8.39
124h	UERRSTAT	Multi-buffer RAM Uncorrectable Parity Error Status Register	Section 11.1.4.8.40
128h	UERRADDR1	RXRAM Uncorrectable Parity Error Address Register	Section 11.1.4.8.41
12Ch	UERRADDR0	TXRAM Uncorrectable Parity Error Address Register	Section 11.1.4.8.42
130h	RXOVRN_BUF_ADDR	RXRAM Overrun Buffer Address Register	Section 11.1.4.8.43
134h	IOLPBKTSTCR	I/O Loopback Test Control Register	Section 11.1.4.8.44
138h	EXTENDED_PRESCALE1	SPI Extended Prescale Register 1	Section 11.1.4.8.45
13Ch	EXTENDED_PRESCALE2	SPI Extended Prescale Register 2	Section 11.1.4.8.46

(1) SPIPC9 only applies to SPI2.

11.1.4.8.1 SPI Global Control Register 0 (SPIGCR0)

Figure 11-52. SPI Global Control Register 0 (SPIGCR0) [offset = 00]

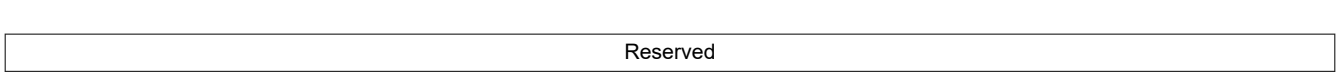

Copyright © 2025 Texas Instruments Incorporated

R-0

15	1	0
Reserved		nRESET
R-0		R/WP-0

LEGEND: R/W = Read/Write; R = Read only; WP = Write in privilege mode only; -*n* = value after reset

Table 11-188. SPI Global Control Register 0 (SPIGCR0) Field Descriptions

Bit	Field	Value	Description
31-1	Reserved	0	Reads return 0. Writes have no effect.
0	nRESET		This is the local reset control for the module. This bit needs to be set to 1 before any operation on SPI / MibSPI can be done. Only after setting this bit to 1, the Auto Initialization of Multi-buffer RAM starts. Clearing this bit to 0 will result in all of the control and status register values to return to their default values..
		0	SPI is in the reset state.
		1	SPI is out of the reset state.

Copyright © 2025 Texas Instruments Incorporated

11.1.4.8.2 SPI Global Control Register 1 (SPIGCR1)

Figure 11-53. SPI Global Control Register 1 (SPIGCR1) [offset = 04h]

31	25	24	23	17	16
Reserved		SPIEN	Reserved		LOOPBACK
R-0		R/W-0	R-0		R/WP-0

15	9	8	7	2	1	0
Reserved		POWERDOWN	Reserved		CLKMOD	MASTER
R-0		R/W-0	R-0		R/W-0	R/W-0

LEGEND: R/W = Read/Write; R = Read only; WP = Write in privilege mode only; -*n* = value after reset

Table 11-189. SPI Global Control Register 1 (SPIGCR1) Field Descriptions

Bit	Field	Value	Description
31-25	Reserved	0	Reads return 0. Writes have no effect.
24	SPIEN		SPI enable. This bit enables SPI transfers. This bit must be set to 1 after all other SPI configuration bits have been written. When the SPIEN bit is 0 or cleared to 0, the following SPI registers get forced to their default states: • Both TX and RX shift registers • The TXDATA fields of the SPI Transmit Data Register 0 (SPIDAT0) and the SPI Transmit Data Register 1 (SPIDAT1) • All the fields of the SPI Flag Register (SPIFLG) • Contents of SPIBUF and the internal RXBUF registers
		0	The SPI is not activated for transfers.
		1	Activates SPI.
23-17	Reserved	0	Reads return 0. Writes have no effect.
16	LOOPBACK		Internal loop-back test mode. The internal self-test option can be enabled by setting this bit. If the SPISIMO and SPISOMI pins are configured with SPI functionality, then the SPISIMO[7:0] pins are internally connected to the SPISOMI[7:0] pins (transmit data is looped back as receive data). GIO mode for these pins is not supported in loopback mode. Externally, during loop-back operation, the SPICLK pin outputs an inactive value and SPISOMI[7:0] remains in the high-impedance state. If the SPI is initialized in slave mode or a data transfer is ongoing, errors may result. **Note: This loopback mode can only be used in master mode. Master mode must be selected before setting LOOPBACK. When this mode is selected, the CLKMOD bit should be set to 1, meaning that SPICLK is internally generated.**
		0	Internal loop-back test mode is disabled.
		1	Internal loop-back test mode is enabled.
15-9	Reserved	0	Reads return 0. Writes have no effect.
8	POWERDOWN		When active, the SPI state machine enters a power-down state.
		0	The SPI is in active mode.
		1	The SPI is in power-down mode.
7-2	Reserved	0	Reads return 0. Writes have no effect.

Copyright © 2025 Texas Instruments Incorporated

Table 11-189. SPI Global Control Register 1 (SPIGCR1) Field Descriptions (continued)

Bit	Field	Value	Description
1	CLKMOD		Clock mode. This bit selects either an internal or external clock source. This bit also determines the I/O direction of the $\overline{\text{SPIENA}}$ and $\overline{\text{SPICS}}$ pins in functional mode.
		0	Clock is external. • $\overline{\text{SPIENA}}$ is an output. • $\overline{\text{SPICS}}$ are inputs.
		1	Clock is internally-generated. • $\overline{\text{SPIENA}}$ is an input. • $\overline{\text{SPICS}}$ are outputs.
0	MASTER		SPISIMO/SPISOMI pin direction determination. Sets the direction of the SPISIMO and SPISOMI pins. **Note: For master-mode operation of the SPI, MASTER bit should be set to 1 and CLKMOD bit can be set either 1 or 0. The master-mode SPI can run on an external clock on SPICLK.** **For slave mode operation, both the MASTER and CLKMOD bits should be cleared to 0. Any other combinations may result in unpredictable behavior of the SPI. In slave mode. SPICLK will not be generated internally in slave mode.**
		0	SPISIMO[7:0] pins are inputs, SPISOMI[7:0] pins are outputs.
		1	SPISOMI[7:0] pins are inputs, SPISIMO[7:0] pins are outputs.

11.1.4.8.3 SPI Interrupt Register (SPIINT0)

Figure 11-54. SPI Interrupt Register (SPIINT0) [offset = 08h]

31							25	24
Reserved								ENABLEHIGHZ
R-0								R/W-0
23							17	16
Reserved								DMAREQEN
R-0								R/W-0
15						10	9	8
Reserved							TXINT ENA	RXINT ENA
R-0							R/W-0	R/W-0
7	6	5	4	3	2	1	0	
Reserved	RXOVRNINT ENA	Reserved	BITERR ENA	DESYNC ENA	PARERR ENA	TIMEOUT ENA	DLENERR ENA	
R-0	R/W-0	R-0	R/W-0	R/W-0	R/W-0	R/W-0	R/W-0	

Copyright © 2025 Texas Instruments Incorporated

LEGEND: R/W = Read/Write; R = Read only; -*n* = value after reset

Table 11-190. SPI Interrupt Register (SPIINT0) Field Descriptions

Bit	Field	Value	Description
31-25	Reserved	0	Reads return 0. Writes have no effect.
24	ENABLEHIGHZ		$\overline{\text{SPIENA}}$ pin high-impedance enable. When active, the $\overline{\text{SPIENA}}$ pin (when it is configured as a WAIT functional output signal in a slave SPI) is forced to high-impedance when not driving a low signal. If inactive, then the pin will output both a high and a low signal.
		0	$\overline{\text{SPIENA}}$ pin is pulled high when not active.
		1	$\overline{\text{SPIENA}}$ pin remains high-impedance when not active.
23-17	Reserved	0	Reads return 0. Writes have no effect.
16	DMAREQEN		DMA request enable. Enables the DMA request signal to be generated for both receive and transmit channels. Enable DMA REQ only after setting the SPIEN bit to 1.
		0	DMA is not used.
		1	DMA requests will be generated.
			Note: A DMA request will be generated on the TX DMA REQ line each time a word is copied to the shift register either from TXBUF or directly from SPIDAT0/SPIDAT1 writes.
			Note: A DMA request will be generated on the RX DMA REQ line each time a word is copied to the SPIBUF register either from RXBUF or directly from the shift register.
15-10	Reserved	0	Reads return 0. Writes have no effect.
9	TXINTENA		Causes an interrupt to be generated every time data is written to the shift register, so that the next word can be written to TXBUF. Setting this bit will generate an interrupt if the TXINTFLG bit (SPI Flag Register (SPIFLG)[9]) is set to 1.
		0	No interrupt will be generated upon TXINTFLG being set to 1.
		1	An interrupt will be generated upon TXINTFLG being set to 1.
			The transmitter empty interrupt is valid in compatibility mode of SPI only. In multi-buffered mode, this interrupts will not be generated, even if it is enabled.
			Note: An interrupt request will be generated as soon as this bit is set to 1. By default it will be generated on the INT0 line. The SPILVL register can be programmed to change the interrupt line.
8	RXINTENA		Causes an interrupt to be generated when the RXINTFLAG bit (SPI Flag Register (SPIFLG)[8]) is set by hardware.
		0	Interrupt will not be generated.
		1	Interrupt will be generated.
			The receiver full interrupt is valid in compatibility mode of SPI only. In multi-buffered mode, this interrupts will not be generated, even if it is enabled.
7	Reserved	0	Reads return 0. Writes have no effect.
6	RXOVRNINTENA		Overrun interrupt enable.
		0	Overrun interrupt will not be generated.
		1	Overrun interrupt will be generated.
5	Reserved	0	Reads return 0. Writes have no effect.
4	BITERRENA		Enables interrupt on bit error.
		0	No interrupt asserted upon bit error.
		1	Enables interrupt on bit error.
3	DESYNCENA		Enables interrupt on desynchronized slave. DESYNCENA is used in master mode only.
		0	No interrupt asserted upon desynchronization error.
		1	An interrupt is asserted on desynchronization of the slave (DESYNC = 1).
2	PARERRENA		Enables interrupt-on-parity-error.
		0	No interrupt asserted on parity error.
		1	An interrupt is asserted on a parity error.

Copyright © 2025 Texas Instruments Incorporated

Table 11-190. SPI Interrupt Register (SPIINT0) Field Descriptions (continued)

Bit	Field	Value	Description
1	TIMEOUTENA		Enables interrupt on ENA signal time-out.
		0	No interrupt asserted upon ENA signal time-out.
		1	An interrupt is asserted on a time-out of the ENA signal.
0	DLENERRENA		Data length error interrupt enable. A data length error occurs under the following conditions. **Master:** When $\overline{\text{SPIENA}}$ is used, if the $\overline{\text{SPIENA}}$ pin from the slave is deasserted before the master has completed its transfer, the data length error is set. That is, if the character length counter has not overflowed while $\overline{\text{SPIENA}}$ deassertion is detected, then it means that the slave has neither received full data from the master nor has it transmitted complete data. **Slave:** When $\overline{\text{SPICS}}$ pins are used, if the incoming valid $\overline{\text{SPICS}}$ pin is deactivated before the character length counter overflows, then the data length error is set.
		0	No interrupt is generated upon data length error.
		1	An interrupt is asserted when a data-length error occurs.

Copyright © 2025 Texas Instruments Incorporated

11.1.4.8.4 SPI Interrupt Level Register (SPILVL)

Figure 11-55. SPI Interrupt Level Register (SPILVL) [offset = 0Ch]

31	30	29	28	27	26	25	24	23	22	21	20	19	18	17	16
Reserved															
R-0															

15	14	13	12	11	10	9	8
Reserved						TXINT LVL	RXINT LVL
R-0						R/W-0	R/W-0

7	6	5	4	3	2	1	0
Reserved	RXOVRNINT LVL	Reserved	BITERR LVL	DESYNC LVL	PARERR LVL	TIMEOUT LVL	DLENERR LVL
R-0	R/W-0	R-0	R/W-0	R/W-0	R/W-0	R/W-0	R/W-0

LEGEND: R/W = Read/Write; R = Read only; *-n* = value after reset

Table 11-191. SPI Interrupt Level Register (SPILVL) Field Descriptions

Bit	Field	Value	Description
31-10	Reserved	0	Reads return 0. Writes have no effect.
9	TXINTLVL		Transmit interrupt level.
		0	Transmit interrupt is mapped to interrupt line INT0.
		1	Transmit interrupt is mapped to interrupt line INT1.
8	RXINTLVL		Receive interrupt level.
		0	Receive interrupt is mapped to interrupt line INT0.
		1	Receive interrupt is mapped to interrupt line INT1.
7	Reserved	0	Reads return 0. Writes have no effect.
6	RXOVRNINTLVL		Receive overrun interrupt level.
		0	Receive overrun interrupt is mapped to interrupt line INT0.
		1	Receive overrun interrupt is mapped to interrupt line INT1.
5	Reserved	0	Reads return 0. Writes have no effect.
4	BITERRLVL		Bit error interrupt level.
		0	Bit error interrupt is mapped to interrupt line INT0.
		1	Bit error interrupt is mapped to interrupt line INT1.
3	DESYNCLVL		Desynchronized slave interrupt level. (master mode only).
		0	An interrupt caused by desynchronization of the slave is mapped to interrupt line INT0.
		1	An interrupt caused by desynchronization of the slave is mapped to interrupt line INT1.
2	PARERRLVL		Parity error interrupt level.
		0	A parity error interrupt is mapped to interrupt line INT0.
		1	A parity error interrupt is mapped to interrupt line INT1.
1	TIMEOUTLVL		$\overline{\text{SPIENA}}$ pin time-out interrupt level.
		0	An interrupt on a time-out of the ENA signal (TIMEOUT = 1) is mapped to interrupt line INT0.
		1	An interrupt on a time-out of the ENA signal (TIMEOUT = 1) is mapped to interrupt line INT1.

Copyright © 2025 Texas Instruments Incorporated

Table 11-191. SPI Interrupt Level Register (SPILVL) Field Descriptions (continued)

Bit	Field	Value	Description
0	DLENERRLVL		Data length error interrupt level (line) select.
		0	An interrupt on data length error is mapped to interrupt line INT0.
		1	An interrupt on data length error is mapped to interrupt line INT1.

Copyright © 2025 Texas Instruments Incorporated

11.1.4.8.5 SPI Flag Register (SPIFLG)

Software must check all flag bits when reading this register.

Figure 11-56. SPI Flag Register (SPIFLG) [offset = 10h]

31	25	24	23	16
Reserved		BUFINIT ACTIVE	Reserved	
R-0		R-0	R-0	

15	10	9	8
Reserved		TXINT FLG	RXINT FLG
R-0		R-0	R/W1C-0

7	6	5	4	3	2	1	0
Reserved	RXOVRNINT FLG	Reserved	BITERR FLG	DESYNC FLG	PARERR FLG	TIMEOUT FLG	DLENERR FLG
R-0	R/W1C-0	R-0	R/W1C-0	R/W1C-0	R/W1C-0	R/W1C-0	R/W1C-0

LEGEND: R/W = Read/Write; R = Read only; W1C = Write 1 to clear; -*n* = value after reset

Table 11-192. SPI Flag Register (SPIFLG) Field Descriptions

Bit	Field	Value	Description
31-25	Reserved	0	Reads return 0. Writes have no effect.
24	BUFINITACTIVE		Indicates the status of multi-buffer initialization process. Software can poll for this bit to determine if it can proceed with the register configuration of multi-buffer mode registers or buffer handling. **Note: If the SPIFLG register is read while the multi-buffer RAM is being initialized, the BUFINITACTIVE bit will be read as 1. If SPIFLG is read after the internal automatic buffer initialization is complete, this bit will be read as 0. This bit will show a value of 1 as long as the nRESET bit is 0, but does not really indicate that buffer initialization is underway. Buffer initialization starts only when the nRESET bit is set to 1.**
		0	Multi-buffer RAM initialization is complete.
		1	Multi-buffer RAM is still being initialized. Do not attempt to write to either multi-buffer RAM or any multi-buffer mode registers.
23-10	Reserved	0	Reads return 0. Writes have no effect.
9	TXINTFLG		Transmitter-empty interrupt flag. Serves as an interrupt flag indicating that the transmit buffer (TXBUF) is empty and a new word can be written to it. This flag is set when a word is copied to the shift register either directly from SPIDAT0/SPIDAT1 or from the TXBUF register. This bit is cleared by one of following methods: • Writing a new data to either SPIDAT0 or SPIDAT1 • Writing a 0 to SPIEN (SPIGCR1[24])
		0	Transmit buffer is now full. No interrupt pending for transmitter empty.
		1	Transmit buffer is empty. An interrupt is pending to fill the transmitter.

Copyright © 2025 Texas Instruments Incorporated

Table 11-192. SPI Flag Register (SPIFLG) Field Descriptions (continued)

Bit	Field	Value	Description
8	RXINTFLG		Receiver-full interrupt flag. This flag is set when a word is received and copied into the buffer register (SPIBUF). If RXINTEN is enabled, an interrupt is also generated. This bit is cleared under the following methods: • Reading the SPIBUF register • Reading TGINTVECT0 or TGINTVECT1 register when there is a receive buffer full interrupt • Writing a 1 to this bit • Writing a 0 to SPIEN (SPIGCR1[24]) • System reset During emulation mode, however, a read to the emulation register (SPIEMU) does not clear this flag bit.
		0	No new received data pending. Receive buffer is empty.
		1	A newly received data is ready to be read. Receive buffer is full.
			Note: Clearing RXINTFLG bit by writing a 1 before reading the SPIBUF sets the RXEMPTY bit of the SPIBUF register too. In this way, one can ignore a received word. However, if the internal RXBUF is already full, the data from RXBUF will be copied to SPIBUF and the RXEMPTY bit will be cleared again. The SPIBUF contents should be read first if this situation needs to be avoided.
7	Reserved	0	Reads return 0. Writes have no effect.
6	RXOVRNINTFLG		Receiver overrun flag. The SPI hardware sets this bit when a receive operation completes before the previous character has been read from the receive buffer. The bit indicates that the last received character has been overwritten and therefore lost. The SPI will generate an interrupt request if this bit is set and the RXOVRN INTEN bit (SPIINT0.6) is set high. This bit is cleared under the following conditions in compatibility mode of MibSPI: • Reading TGINTVECT0 or TGINTVECT1 register when there is a receive-buffer-overrun interrupt • Writing a 1 to RXOVRNINTFLG in the SPI Flag Register (SPIFLG) itself • Writing a 0 to SPIEN • Reading the data field of the SPIBUF register **Note: Reading the SPIBUF register does not clear this RXOVRNINTFLG bit. If an RXOVRN interrupt is detected, then the SPIBUF may need to be read twice to get to the overrun buffer. This is due to the fact that the overrun will always occur to the internal RXBUF. Each read to the SPIBUF will result in RXBUF contents (if it is full) getting copied to SPIBUF.** **Note: There is a special condition under which the RXOVRNINTFLG flag gets set. If both SPIBUF and RXBUF are already full and while another reception is underway, if any errors (TIMEOUT, BITERR, and DLEN_ERR) occur, then RXOVR in RXBUF and RXOVRNINTFLG in SPIFLG registers will be set to indicate that the status flags are getting overwritten by the new transfer. This overrun should be treated like a receive overrun.** In multi-buffer mode of MibSPI, this bit is cleared under the following conditions: • Reading the RXOVRN_BUF_ADDR register • Writing a 1 to RXOVRNINTFLG in the SPI Flag Register (SPIFLG) itself In multi-buffer mode, if RXOVRNINTFLG is set, then the address of the buffer which experienced the overrun is available in RXOVRN_BUF_ADDR.
		0	Overrun condition did not occur.
		1	Overrun condition has occurred.
5	Reserved	0	Reads return 0. Writes have no effect.

Copyright © 2025 Texas Instruments Incorporated

Table 11-192. SPI Flag Register (SPIFLG) Field Descriptions (continued)

Bit	Field	Value	Description
4	BITERRFLG		Mismatch of internal transmit data and transmitted data. This flag can be cleared by one of the following methods. • Write a 1 to this bit • Clear the SPIEN bit to 0
		0	No bit error occurred.
		1	A bit error occurred. The SPI samples the signal of the transmit pin (master: SIMO, slave: SOMI) at the receive point (half clock cycle after transmit point). If the sampled value differs from the transmitted value a bit error is detected and the flag BITERRFLG is set. If BITERRENA is set an interrupt is asserted. Possible reasons for a bit error can be an excessively high bit rate, capacitive load, or another master/slave trying to transmit at the same time.
3	DESYNCFLG		Desynchronization of slave device. Desynchronization monitor is active in master mode only. This flag can be cleared by one of the following methods: • Write a 1 to this bit • Clear the SPIEN bit to 0
		0	No slave desynchronization is detected.
		1	A slave device is desynchronized. The master monitors the ENAble signal coming from the slave device and sets the DESYNC flag after the last bit is transmitted plus $t_{T2EDELAY}$. If DESYNCENA is set an interrupt is asserted. Desynchronization can occur if a slave device misses a clock edge coming from the master.
2	PARERRFLG		Calculated parity differs from received parity bit. If the parity generator is enabled (can be selected individually for each buffer) an even or odd parity bit is added at the end of a data word. During reception of the data word the parity generator calculates the reference parity and compares it to the received parity bit. In the event of a mismatch the PARITYERR flag is set and an interrupt is asserted if PARERRENA is set. This flag can be cleared by one of the following methods: • Write a 1 to this bit • Clear the SPIEN bit to 0
		0	No parity error is detected.
		1	A parity error occurred.
1	TIMEOUTFLG		Time-out caused by nonactivation of ENA signal. This flag can be cleared by one of the following methods: • Write a 1 to this bit • Clear the SPIEN bit to 0
		0	No ENA-signal time-out occurred.
		1	An ENA signal time-out occurred. The SPI generates a time-out because the slave hasn't responded in time by activating the ENA signal after the chip select signal has been activated. If a time-out condition is detected the corresponding chip select is deactivated immediately and the TIMEOUT flag is set. In addition the TIMEOUT flag in the status field of the corresponding buffer is set. The transmit request of the concerned buffer is cleared, that is, the SPI does not re-start a data transfer from this buffer.
0	DLENERRFLG		Data-length error flag. This flag can be cleared by one of the following methods: • Write a 1 to this bit • Clear the SPIEN bit to 0 **Note: Whenever any transmission errors (TIMEOUT, BITERR, DLEN_ERR, PARITY_ERR, DESYNC) are detected and the error flags are cleared by writing to the error bit in the SPIFLG register, the corresponding error flag in SPIBUF does not get cleared. Software needs to read the SPIBUF until it becomes empty before proceeding. This ensures that all of the old status bits in SPIBUF are cleared before starting the next transfer.**
		0	No data length error has occurred.
		1	A data length error has occurred.

Copyright © 2025 Texas Instruments Incorporated

11.1.4.8.6 SPI Pin Control Register 0 (SPIPC0)

Note

Register bits vary by device

Register bits 31:24 and 23:16 of SPIPC0 to SPIPC9 reflect the number of SIMO/SOMI data lines per device. On devices with 8 data-line support, all of bits 31 to 16 are implemented. On devices with less than 8 data lines, only a subset of these bits are available. Unimplemented bits return 0 upon read and are not writable.

Figure 11-57. SPI Pin Control Register 0 (SPIPC0) [offset = 14h]

31	24	23	16
SOMIFUN		SIMOFUN	
R/W-0		R/W-0	

15	12	11	10	9	8
Reserved		SOMIFUN0	SIMOFUN0	CLKFUN	ENAFUN
R-0		R/W-0	R/W-0	R/W-0	R/W-0

7	0
SCSFUN	
R/W-0	

LEGEND: R/W = Read/Write; R = Read only; *-n* = value after reset

Table 11-193. SPI Pin Control (SPIPC0) Field Descriptions

Bit	Field	Value	Description
31-24	SOMIFUN		Slave out, master in function. Determines whether each SPISOMI[x] pin is to be used as a general-purpose I/O pin or as a SPI functional pin. **Note: Duplicate Control Bits for SPISOMI[0]. Bit 24 is not physically implemented. It is a mirror of Bit 11. Any write to bit 24 will be reflected on bit 11. When bit 24 and bit 11 are simultaneously written, the value of bit 11 will control the SPISOMI[0] pin. The read value of bit 24 always reflects the value of bit 11.**
		0	The SPISOMI[x] pin is a GIO pin.
		1	The SPISOMI[x] pin is a SPI functional pin.
23-16	SIMOFUN		Slave in, master out function. Determines whether each SPISIMO[x] pin is to be used as a general-purpose I/O pin or as a SPI functional pin. **Note: Duplicate Control Bits for SPISIMO[0]. Bit 16 is not physically implemented. It is a mirror of Bit 10. Any write to bit 16 will be reflected on bit 10. When bit 16 and bit 10 are simultaneously written, the value of bit 10 will control the SPISIMO[0] pin. The read value of bit 16 always reflects the value of bit 10.**
		0	The SPISIMO[x] pin is a GIO pin.
		1	The SPISIMO[x] pin is a SPI functional pin.
15-12	Reserved	0	Reads return 0. Writes have no effect.

Copyright © 2025 Texas Instruments Incorporated

Table 11-193. SPI Pin Control (SPIPC0) Field Descriptions (continued)

Bit	Field	Value	Description
11	SOMIFUN0		Slave out, master in function. This bit determines whether the SPISOMI[0] pin is to be used as a general-purpose I/O pin or as a SPI functional pin.
		0	The SPISOMI[0] pin is a GIO pin.
		1	The SPISOMI[0] pin is a SPI functional pin.
			Note: Regardless of the number of parallel pins used, the SPISOMI[0] pin will always have to be programmed as functional pins for any SPI transfers.
10	SIMOFUN0		Slave in, master out function. This bits determine whether each SPISIMO[0] pin is to be used as a general-purpose I/O pin or as a SPI functional pin.
		0	The SPISIMO[0] pin is a GIO pin.
		1	The SPISIMO[0] pin is a SPI functional pin.
			Note: Regardless of the number of parallel pins used, the SPISIMO[0] pin will always have to be programmed as functional pins for any SPI transfers.
9	CLKFUN		SPI clock function. This bit determines whether the SPICLK pin is to be used as a general-purpose I/O pin, or as a SPI functional pin.
		0	The SPICLK pin is a GIO pin.
		1	The SPICLK pin is a SPI functional pin.
8	ENAFUN		$\overline{\text{SPIENA}}$ function. This bit determines whether the $\overline{\text{SPIENA}}$ pin is to be used as a general-purpose I/O pin or as a SPI functional pin.
		0	The $\overline{\text{SPIENA}}$ pin is a GIO pin.
		1	The $\overline{\text{SPIENA}}$ pin is a SPI functional pin.
7-0	SCSFUN		$\overline{\text{SPICS}}$ function. Determines whether each $\overline{\text{SPICS}}$ pin is to be used as a general-purpose I/O pin or as a SPI functional pin. If the slave $\overline{\text{SPICS}}$ pins are in functional mode and receive an inactive high signal, the slave SPI will place its output in a high-impedance state and disable shifting.
		0	The $\overline{\text{SPICS}}$ pin is a GIO pin.
		1	The $\overline{\text{SPICS}}$ pin is a SPI functional pin.

11.1.4.8.7 SPI Pin Control Register 1 (SPIPC1)

Note

Register bits vary by device

Register bits 31:24 and 23:16 of this register reflect the number of SIMO/SOMI data lines per device. On devices with 8 data-line support, all of bits 31 to 16 are implemented. On devices with less than 8 data lines, only a subset of these bits are available. Unimplemented bits return 0 upon read and are not writable.

Figure 11-58. SPI Pin Control Register 1 (SPIPC1) [offset = 18h]

31	24	23	16
SOMIDIR		SIMODIR	
R/W-0		R/W-0	

15	12	11	10	9	8
Reserved		SOMIDIR0	SIMODIR0	CLKDIR	ENADIR
R-0		R/W-0	R/W-0	R/W-0	R/W-0

Copyright © 2025 Texas Instruments Incorporated

7	0
SCSDIR	
R/W-0	

LEGEND: R/W = Read/Write; R = Read only; *-n* = value after reset

Table 11-194. SPI Pin Control Register (SPIPC1) Field Descriptions

Bit	Field	Value	Description
31-24	SOMIDIR		SPISOMI[x] direction. Controls the direction of each SPISOMI[x] pin when used for general-purpose I/O. If SPISOMI[x] pin is used as a SPI functional pin, the I/O direction is determined by the MASTER bit in the SPIGCR1 register. **Note: Duplicate Control Bits for SPISOMI[0]. Bit 24 is not physically implemented. It is a mirror of Bit 11. Any write to bit 24 will be reflected on bit 11. When bit 24 and bit 11 are simultaneously written, the value of bit 11 will control the SPISOMI[0] pin. The read value of bit 24 always reflects the value of bit 11.**
		0	The SPISOMI[x] pin is an input.
		1	The SPISOMI[x] pin is an output.
23-16	SIMODIR		SPISIMO[x] direction. Controls the direction of each SPISIMO[x] pin when used for general-purpose I/O. If SPISIMO[x] pin is used as a SPI functional pin, the I/O direction is determined by the MASTER bit in the SPIGCR1 register. **Note: Duplicate Control Bits for SPISIMO[0]. Bit 16 is not physically implemented. It is a mirror of Bit 10. Any write to bit 16 will be reflected on bit 10. When bit 16 and bit 10 are simultaneously written, the value of bit 10 will control the SPISIMO[0] pin. The read value of bit 16 always reflects the value of bit 10.**
		0	The SPISIMO[x] pin is an input.
		1	The SPISIMO[x] pin is an output.
15-12	Reserved	0	Reads return 0. Writes have no effect.
11	SOMIDIR0		SPISOMI[0] direction. This bit controls the direction of the SPISOMI[0] pin when it is used as a general-purpose I/O pin. If the SPISOMI[0] pin is used as a SPI functional pin, the I/O direction is determined by the MASTER bit in the SPIGCR1 register.
		0	The SPISOMI[0] pin is an input.
		1	The SPISOMI[0] pin is an output.
10	SIMODIR0		SPISIMO[0] direction. This bit controls the direction of the SPISIMO[0] pin when it is used as a general-purpose I/O pin. If the SPISIMO[0] pin is used as a SPI functional pin, the I/O direction is determined by the MASTER bit in the SPIGCR1 register.
		0	The SPISIMO[0] pin is an input.
		1	The SPISIMO[0] pin is an output.
9	CLKDIR		SPICLK direction. This bit controls the direction of the SPICLK pin when it is used as a general-purpose I/O pin. In functional mode, the I/O direction is determined by the CLKMOD bit.
		0	The SPICLK pin is an input.
		1	The SPICLK pin is an output.
8	ENADIR		$\overline{\text{SPIENA}}$ direction. This bit controls the direction of the $\overline{\text{SPIENA}}$ pin when it is used as a general-purpose I/O. If the $\overline{\text{SPIENA}}$ pin is used as a functional pin, then the I/O direction is determined by the CLKMOD bit (SPIGCR1[1]).
		0	The $\overline{\text{SPIENA}}$ pin is an input.
		1	The $\overline{\text{SPIENA}}$ pin is an output.
7-0	SCSDIR		$\overline{\text{SPICS}}$ direction. These bits control the direction of each $\overline{\text{SPICS}}$ pin when it is used as a general-purpose I/O pin. Each pin could be configured independently from the others if the $\overline{\text{SPICS}}$ is used as a SPI functional pin. The I/O direction is determined by the CLKMOD bit (SPIGCR1[1]).
		0	The $\overline{\text{SPICS}}$ pin is an input.
		1	The $\overline{\text{SPICS}}$ pin is an output.

Copyright © 2025 Texas Instruments Incorporated

11.1.4.8.8 SPI Pin Control Register 2 (SPIPC2)

Note

Register bits vary by device

Register bits 31:24 and 23:16 of this register reflect the number of SIMO/SOMI data lines per device. On devices with 8 data-line support, all of bits 31 to 16 are implemented. On devices with less than 8 data lines, only a subset of these bits are available. Unimplemented bits return 0 upon read and are not writable.

Figure 11-59. SPI Pin Control Register 2 (SPIPC2) [offset = 1Ch]

31	24	23	16
SOMIDIN		SIMODIN	
R/W-U		R/W-U	

15	12	11	10	9	8
Reserved		SOMIDIN0	SIMODIN0	CLKDIN	ENADIN
R-0		R-U	R-U	R-U	R-U

7	0
SCSDIN	
R/W-U	

LEGEND: R/W = Read/Write; R = Read only; U = Undefined; -*n* = value after reset

Table 11-195. SPI Pin Control Register 2 (SPIPC2) Field Descriptions

Bit	Field	Value	Description
31-24	SOMIDIN		SPISOMI[x] data in. The value of each SPISOMI[x] pin.
		0	The SPISOMI[x] pin is logic 0.
		1	The SPISOMI[x] pin is logic 1.
23-16	SIMODIN		SPISIMO[x] data in. The value of each SPISIMO[x] pin.
		0	The SPISIMO[x] pin is logic 0.
		1	The SPISIMO[x] pin is logic 1.
15-12	Reserved	0	Reads return 0. Writes have no effect.
11	SOMIDIN0		SPISOMI[0] data in. The value of the SPISOMI[0] pin.
		0	The SPISOMI[0] pin is logic 0.
		1	The SPISOMI[0] pin is logic 1.
10	SIMODIN0		SPISIMO[0] data in. The value of the SPISIMO[0] pin.
		0	The SPISIMO[0] pin is logic 0.
		1	The SPISIMO[0] pin is logic 1.
9	CLKDIN		Clock data in. The value of the SPICLK pin.
		0	The SPICLK pin is logic 0.
		1	The SPICLK pin is logic 1.

Copyright © 2025 Texas Instruments Incorporated

Table 11-195. SPI Pin Control Register 2 (SPIPC2) Field Descriptions (continued)

Bit	Field	Value	Description
8	ENADIN		$\overline{\text{SPIENA}}$ data in. The the value of the $\overline{\text{SPIENA}}$ pin.
		0	The $\overline{\text{SPIENA}}$ pin is logic 0.
		1	The $\overline{\text{SPIENA}}$ pin is logic 1.
7-0	SCSDIN		$\overline{\text{SPICS}}$ data in. The value of each $\overline{\text{SPICS}}$ pin.
		0	The $\overline{\text{SPICS}}$ pin is logic 0.
		1	The $\overline{\text{SPICS}}$ pin is logic 1.

Copyright © 2025 Texas Instruments Incorporated

11.1.4.8.9 SPI Pin Control Register 3 (SPIPC3)

Note

Register bits vary by device

Register bits 31:24 and 23:16 of this register reflect the number of SIMO/SOMI data lines per device. On devices with 8 data-line support, all of bits 31 to 16 are implemented. On devices with less than 8 data lines, only a subset of these bits are available. Unimplemented bits return 0 upon read and are not writable.

Figure 11-60. SPI Pin Control Register 3 (SPIPC3) [offset = 20h]

31	24	23	16
SOMIDOUT		SIMODOUT	
R/W-U		R/W-U	

15	12	11	10	9	8
Reserved		SOMIDOUT0	SIMODOUT0	CLKDOUT	ENADOUT
R-0		R/W-U	R/W-U	R/W-U	R/W-U

7	0
SCSDOUT	
R/W-U	

LEGEND: R/W = Read/Write; R = Read only; U = Undefined; -*n* = value after reset

Table 11-196. SPI Pin Control Register 3 (SPIPC3) Field Descriptions

Bit	Field	Value	Description
31-24	SOMIDOUT		SPISOMI[x] data out write. This bit is only active when the SPISOMI[x] pin is configured as a general-purpose I/O pin and configured as an output pin. The value of this bit indicates the value sent to the pin. **Bit 11 or bit 24 can be used to set the direction for pin SPISOMI[0]. If a 32-bit write is performed, bit 11 will have priority over bit 24.**
		0	Current value on SPISOMI[x] pin is logic 0.
		1	Current value on SPISOMI[x] pin is logic 1
23-16	SIMODOUT		SPISIMO[x] data out write. This bit is only active when the SPISIMO[x] pin is configured as a general-purpose I/O pin and configured as an output pin. The value of this bit indicates the value sent to the pin. **Bit 10 or bit 16 can be used to set the direction for pin SPISIMO[0]. If a 32-bit write is performed, bit 10 will have priority over bit 16.**
		0	Current value on SPISIMO[x] pin is logic 0.
		1	Current value on SPISIMO[x] pin is logic 1.
15-12	Reserved	0	Reads return 0. Writes have no effect.
11	SOMIDOUT0		SPISOMI[0] data out write. This bit is only active when the SPISOMI[0] pin is configured as a general-purpose I/O pin and configured as an output pin. The value of this bit indicates the value sent to the pin.
		0	Current value on SPISOMI[0] pin is logic 0.
		1	Current value on SPISOMI[0] pin is logic 1.

Copyright © 2025 Texas Instruments Incorporated

Table 11-196. SPI Pin Control Register 3 (SPIPC3) Field Descriptions (continued)

Bit	Field	Value	Description
10	SIMODOUT0		SPISIMO[0] data out write. This bit is only active when the SPISIMO[0] pin is configured as a general-purpose I/O pin and configured as an output pin. The value of this bit indicates the value sent to the pin.
		0	Current value on SPISIMO[0] pin is logic 0.
		1	Current value on SPISIMO[0] pin is logic 1.
9	CLKDOUT		SPICLK data out write. This bit is only active when the SPICLK pin is configured as a general-purpose I/O pin and configured as an output pin. The value of this bit indicates the value sent to the pin.
		0	The SPICLK pin is logic 0.
		1	The SPICLK pin is logic 1.
8	ENADOUT		$\overline{\text{SPIENA}}$ data out write. Only active when the $\overline{\text{SPIENA}}$ pin is configured as a general-purpose I/O pin and configured as an output pin. The value of this bit indicates the value sent to the pin.
		0	The $\overline{\text{SPIENA}}$ pin is logic 0.
		1	The $\overline{\text{SPIENA}}$ pin is logic 1.
7-0	SCSDOUT		$\overline{\text{SPICS}}$ data out write. Only active when the $\overline{\text{SPICS}}$ pins are configured as a general-purpose I/O pins and configured as output pins. The value of these bits indicates the value sent to the pins.
		0	The $\overline{\text{SPICS}}$ pin is logic 0.
		1	The $\overline{\text{SPICS}}$ pin is logic 1.

11.1.4.8.10 SPI Pin Control Register 4 (SPIPC4)

Note

Register bits vary by device

Register bits 31:24 and 23:16 of this register reflect the number of SIMO/SOMI data lines per device. On devices with 8 data-line support, all of bits 31 to 16 are implemented. On devices with less than 8 data lines, only a subset of these bits are available. Unimplemented bits return 0 upon read and are not writable.

Figure 11-61. SPI Pin Control Register 4 (SPIPC4) [offset = 24h]

31	24	23	16
SOMISET		SIMOSET	
R/W-U		R/W-U	

15	12	11	10	9	8
Reserved		SOMISET0	SIMOSET0	CLKSET	ENASET
R-0		R/W-U	R/W-U	R/W-U	R/W-U

7	0
SCSSET	
R/W-U	

Copyright © 2025 Texas Instruments Incorporated

LEGEND: R/W = Read/Write; R = Read only; U = Undefined; -*n* = value after reset

Table 11-197. SPI Pin Control Register 4 (SPIPC4) Field Descriptions

Bit	Field	Value	Description
31-24	SOMISET		SPISOMI[x] data out set. This pin is only active when the SPISOMI[x] pin is configured as a general-purpose output pin. **Bit 11 or bit 24 can be used to set the SPISOMI[0] pin. If a 32-bit write is performed, bit 11 will have priority over bit 24.**
		0	Read: SPISOMI[x] is logic 0. Write: Writing a 0 to this bit has no effect.
		1	Read: SPISOMI[x] is logic 1. Write: Logic 1 is placed on SPISOMI[x] pin, if it is in general-purpose output mode.
23-16	SIMOSET		SPISIMO[x] data out set. This bit is only active when the SPISIMO[x] pin is configured as a general-purpose output pin. **Bit 10 or bit 16 can be used to set the SPISIMO[0] pin. If a 32-bit write is performed, bit 10 will have priority over bit 16.**
		0	Read: SPISIMO[x] is logic 0. Write: Writing a 0 to this bit has no effect.
		1	Read: SPISIMO[x] is logic 1. Write: Logic 1 is placed on SPISIMO[x] pin, if it is in general-purpose output mode.
15-12	Reserved	0	Reads return 0. Writes have no effect.
11	SOMISET0		SPISOMI[0] data out set. This pin is only active when the SPISOMI[0] pin is configured as a general-purpose output pin.
		0	Read: SPISOMI[0] is logic 0. Write: Writing a 0 to this bit has no effect.
		1	Read: SPISOMI[0] is logic 1. Write: Logic 1 is placed on SPISOMI[0] pin, if it is in general-purpose output mode.
10	SIMOSET0		SPISIMO[0] data out set. This pin is only active when the SPISIMO[0] pin is configured as a general-purpose output pin.
		0	Read: SPISIMO[0] is logic 0. Write: Writing a 0 to this bit has no effect.
		1	Read: SPISIMO[0] is logic 1. Write: Logic 1 is placed on SPISIMO[0] pin, if it is in general-purpose output mode.
9	CLKSET		SPICLK data out set. This bit is only active when the SPICLK pin is configured as a general-purpose output pin.
		0	Read: SPICLK is logic 0. Write: Writing a 0 to this bit has no effect.
		1	Read: SPICLK is logic 1. Write: Logic 1 is placed on SPICLK pin, if it is in general-purpose output mode.
8	ENASET		$\overline{\text{SPIENA}}$ data out set. This bit is only active when the $\overline{\text{SPIENA}}$ pin is configured as a general-purpose output pin.
		0	Read: $\overline{\text{SPIENA}}$ is logic 0. Write: Writing a 0 to this bit has no effect.
		1	Read: $\overline{\text{SPIENA}}$ is logic 1. Write: Logic 1 is placed on $\overline{\text{SPIENA}}$ pin, if it is in general-purpose output mode.

Copyright © 2025 Texas Instruments Incorporated

Table 11-197. SPI Pin Control Register 4 (SPIPC4) Field Descriptions (continued)

Bit	Field	Value	Description
7-0	SCSSET		$\overline{\text{SPICS}}$ data out set. This bit is only active when the $\overline{\text{SPICS}}$ pin is configured as a general-purpose output pin. A value of 1 written to this bit sets the corresponding SCSDOUT bit to 1.
		0	Read: $\overline{\text{SPICS}}$ is logic 0. Write: Writing a 0 to this bit has no effect.
		1	Read: $\overline{\text{SPICS}}$ is logic 1. Write: Logic 1 is placed on $\overline{\text{SPICS}}$ pin, if it is in general-purpose output mode.

Copyright © 2025 Texas Instruments Incorporated

11.1.4.8.11 SPI Pin Control Register 5 (SPIPC5)

Note

Register bits vary by device

Register bits 31:24 and 23:16 of this register reflect the number of SIMO/SOMI data lines per device. On devices with 8 data-line support, all of bits 31 to 16 are implemented. On devices with less than 8 data lines, only a subset of these bits are available. Unimplemented bits return 0 upon read and are not writable.

Figure 11-62. SPI Pin Control Register 5 (SPIPC5) [offset = 28h]

31	24	23	16
SOMICLR		SIMOCLR	
R/W-U		R/W-U	

15	12	11	10	9	8
Reserved		SOMICLR0	SIMOCLR0	CLKCLR	ENACLR
R-0		R/W-U	R/W-U	R/W-U	R/W-U

7	0
SCSCLR	
R/W-U	

LEGEND: R/W = Read/Write; R = Read only; U = Undefined; -*n* = value after reset

Table 11-198. SPI Pin Control Register 5 (SPIPC5) Field Descriptions

Bit	Field	Value	Description
31-24	SOMICLR		SPISOMI[x] data out clear. This pin is only active when the SPISOMI[x] pin is configured as a general-purpose output pin. **Bit 11 or bit 24 can be used to set the SPISOMI[0] pin. If a 32-bit write is performed, bit 11 will have priority over bit 24.**
		0	Read: The current value on SPISOMI[x] is 0. Write: Writing a 0 to this bit has no effect.
		1	Read: The current value on SPISOMI[x] is 1. Write: Logic 0 is placed on SPISOMI[x] pin, if it is in general-purpose output mode.
23-16	SIMOCLR		SPISIMO[x] data out clear. This bit is only active when the SPISIMO[x] pin is configured as a general-purpose output pin. **Bit 10 or bit 16 can be used to set the SPISIMO[0] pin. If a 32-bit write is performed, bit 10 will have priority over bit 16.**
		0	Read: The current value on SPISIMO[x] is 0. Write: Writing a 0 to this bit has no effect.
		1	Read: The current value on SPISIMO[x] is 1. Write: Logic 0 is placed on SPISIMO[x] pin, if it is in general-purpose output mode.
15-12	Reserved	0	Reads return 0. Writes have no effect.

Copyright © 2025 Texas Instruments Incorporated

Table 11-198. SPI Pin Control Register 5 (SPIPC5) Field Descriptions (continued)

Bit	Field	Value	Description
11	SOMICLR0		SPISOMI[0] data out clear. This pin is only active when the SPISOMI[0] pin is configured as a general-purpose output pin.
		0	Read: The current value on SPISOMI[0] is 0. Write: Writing a 0 to this bit has no effect.
		1	Read: The current value on SPISOMI[0] is 1. Write: Logic 0 is placed on SPISOMI[0] pin, if it is in general-purpose output mode.
10	SIMOCLR0		SPISIMO[0] data out clear. This pin is only active when the SPISIMO[0] pin is configured as a general-purpose output pin.
		0	Read: The current value on SPISIMO[0] is 0. Write: Writing a 0 to this bit has no effect.
		1	Read: The current value on SPISIMO[0] is 1. Write: Logic 0 is placed on SPISIMO[0] pin, if it is in general-purpose output mode.
9	CLKCLR		SPICLK data out clear. This bit is only active when the SPICLK pin is configured as a general-purpose output pin.
		0	Read: The current value on SPICLK is 0. Write: Writing a 0 to this bit has no effect.
		1	Read: The current value on SPICLK is 1. Write: Logic 0 is placed on SPICLK pin, if it is in general-purpose output mode.
8	ENACLR		$\overline{\text{SPIENA}}$ data out clear. This bit is only active when the $\overline{\text{SPIENA}}$ pin is configured as a general-purpose output pin. A value of 1 written to this bit clears the corresponding ENABLEDOUT bit to 0.
		0	Read: The current value on $\overline{\text{SPIENA}}$ is 0. Write: Writing a 0 to this bit has no effect.
		1	Read: The current value on $\overline{\text{SPIENA}}$ is 1. Write: Logic 0 is placed on $\overline{\text{SPIENA}}$ pin, if it is in general-purpose output mode.
7-0	SCSCLR		$\overline{\text{SPICS}}$ data out clear. This bit is only active when the $\overline{\text{SPICS}}$ pin is configured as a general-purpose output pin.
		0	Read: The current value on SCSDOUT is 0. Write: Writing a 0 to this bit has no effect.
		1	Read: The current value on SCSDOUT is 1. Write: Logic 0 is placed on $\overline{\text{SPICS}}$ pin, if it is in general-purpose output mode.

11.1.4.8.12 SPI Pin Control Register 6 (SPIPC6)

Note

Register bits vary by device

Register bits 31:24 and 23:16 of SPIPC0 to SPIPC9 reflect the number of SIMO/SOMI data lines per device. On devices with 8 data-line support, all of bits 31 to 16 are implemented. On devices with less than 8 data lines, only a subset of these bits are available. Unimplemented bits return 0 upon read and are not writable.

Figure 11-63. SPI Pin Control Register 6 (SPIPC6) [offset = 2Ch]

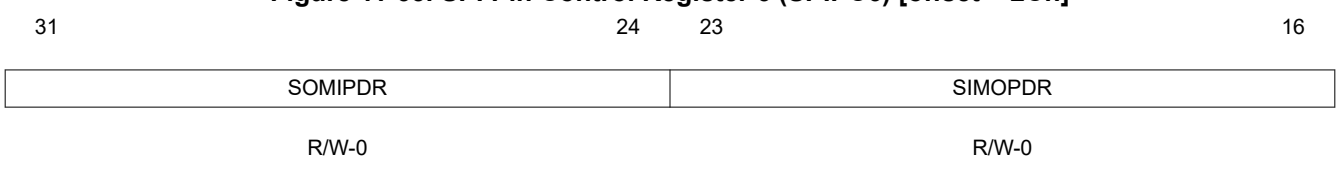

Copyright © 2025 Texas Instruments Incorporated

15	12	11	10	9	8
Reserved		SOMIPDR0	SIMOPDR0	CLKPDR	ENAPDR
R-0		R/W-0	R/W-0	R/W-0	R/W-0

7	0
SCSPDR	
R/W-0	

LEGEND: R/W = Read/Write; R = Read only; -*n* = value after reset

Table 11-199. SPI Pin Control Register 6 (SPIPC6) Field Descriptions

Bit	Field	Value	Description
31-24	SOMIPDR		SPISOMI[x] open drain enable. This bit enables open drain capability for each SPISOMI[x] pin, if the following conditions are met: • SOMIDIRx = 1 (SPISOMI[x] pin is configured in GIO mode as an output pin) • SOMIDOUTx = 1 **Bit 11 or bit 24 can both be used to enable open-drain for SPISOMI[0]. If a 32-bit write is performed, bit 11 will have priority over bit 24.**
		0	Output value on the SPISOMI[x] pin is logic 1.
		1	Output pin SPISOMI[x] is in a high-impedance state.
23-16	SIMOPDR		SPISIMO[x] open drain enable. This bit enables open drain capability for each SPISIMO[x] pin, if the following conditions are met: • SIMODIRx = 1 (SPISIMO[x] pin is configured in GIO mode as an output pin) • SIMODOUTx = 1 **Bit 10 or bit 16 can both be used to enable open-drain for SPISIMO[0]. If a 32-bit write is performed, bit 10 will have priority over bit 16.**
		0	Output value on the SPISIMO[x] pin is logic 1.
		1	Output pin SPISIMO[x] is in a high-impedance state.
15-12	Reserved	0	Reads return 0. Writes have no effect.
11	SOMIPDR0		SPISOMI[0] open-drain enable. This bit enables open-drain capability for the SPISOMI[0] pin, if the following conditions are met: • SPISOMI[0] pin is configured in GIO mode as output pin • Output value on SPISOMI[0] pin is logic 1
		0	Output value on the SPISOMI[0] pin is logic 1.
		1	Output pin SPISOMI[0] is in a high-impedance state.
10	SIMOPDR0		SPISIMO[0] open-drain enable. This bit enables open drain capability for the SPISIMO[0] pin, if the following conditions are met: • SPISIMO[0] pin is configured in GIO mode as output pin • Output value on SPISIMO[0] pin is logic 1
		0	Output value on the SPISIMO[0] pin is logic 1.
		1	Output pin SPISIMO[0] is in a high-impedance state.

Copyright © 2025 Texas Instruments Incorporated

Table 11-199. SPI Pin Control Register 6 (SPIPC6) Field Descriptions (continued)

Bit	Field	Value	Description
9	CLKPDR		SPICLK open drain enable. This bit enables open drain capability for the SPICLK pin, if the following conditions are met: • SPICLK pin is configured in GIO mode as an output pin • SPICLKDOUT = 1
		0	Output value on the SPICLK pin is logic 1.
		1	Output pin SPICLK is in a high-impedance state.
8	ENAPDR		$\overline{\text{SPIENA}}$ open drain enable. This bit enables open drain capability for the $\overline{\text{SPIENA}}$ pin, if the following conditions are met: • $\overline{\text{SPIENA}}$ pin is configured in GIO mode as an output pin • SPIENADOUT = 1
		0	Output value on the $\overline{\text{SPIENA}}$ pin is logic 1.
		1	Output pin $\overline{\text{SPIENA}}$ is in a high-impedance state.
7-0	SCSPDR		$\overline{\text{SPICS}}$ open drain enable. This bit enables open drain capability for each $\overline{\text{SPICS}}$ pin, if the following conditions are met: • $\overline{\text{SPICS}}$ pin is configured in GIO mode as an output pin • SCSDOUT = 1
		0	Output value on the $\overline{\text{SPICS}}$ pin is logic 1.
		1	Output pin $\overline{\text{SPICS}}$ is in a high-impedance state.

Copyright © 2025 Texas Instruments Incorporated

11.1.4.8.13 SPI Pin Control Register 7 (SPIPC7)

Note

Register bits vary by device

Register bits 31:24 and 23:16 of this register reflect the number of SIMO/SOMI data lines per device. On devices with 8 data-line support, all of bits 31 to 16 are implemented. On devices with less than 8 data lines, only a subset of these bits are available. Unimplemented bits return 0 upon read and are not writable.

Note

Default Register Value

The default values of these register bits vary by device. See your device datasheet for information about default pin states, which correspond to the register reset values (see the pin-list table).

Figure 11-64. SPI Pin Control Register 7 (SPIPC7) [offset = 30h]

31	24	23	16
SOMIDIS		SIMODIS	
R/W-x		R/W-x	

15	12	11	10	9	8
Reserved		SOMIPDIS0	SIMOPDIS0	CLKPDIS	ENAPDIS
R-0		R/W-x	R/W-x	R/W-x	R/W-x

7	0
SCSPDIS	
R/W-x	

LEGEND: R/W = Read/Write; R = Read only; *-n* = value after reset; -x = value varies by device

Table 11-200. SPI Pin Control Register 7 (SPIPC7) Field Descriptions

Bit	Field	Value	Description
31-24	SOMIDIS		SPISOMI[x] pull control disable. This bit disables pull control capability for each SPISOMI[x] pin if it is in input mode, regardless of whether it is in functional or GIO mode. **Note: Bit 11 or bit 24 can be used to set pull-disable for SPISOMI[0]. If a 32-bit write is performed, bit 11 will have priority over bit 24.**
		0	Pull control on the SPISOMI[x] pin is enabled.
		1	Pull control on the SPISOMI[x] pin is disabled.
23-16	SIMODIS		SPISIMO[x] pull control disable. This bit disables pull control capability for each SPISIMO[x] pin if it is in input mode, regardless of whether it is in functional or GIO mode. **Note: Bit 10 or bit 16 can be used to set pull-disable for SPISIMO[0]. If a 32-bit write is performed, bit 10 will have priority over bit 16.**
		0	Pull control on the SPISIMO[x] pin is enabled.
		1	Pull control on the SPISIMO[x] pin is disabled.
15-12	Reserved	0	Reads return 0. Writes have no effect.

Copyright © 2025 Texas Instruments Incorporated

Table 11-200. SPI Pin Control Register 7 (SPIPC7) Field Descriptions (continued)

Bit	Field	Value	Description
11	SOMIPDIS0		SPISOMI[0] pull control disable. This bit disables pull control capability for the SPISOMI[0] pin if it is in input mode, regardless of whether it is in functional or GIO mode.
		0	Pull control on the SPISOMI[0] pin is enabled.
		1	Pull control on the SPISOMI[0] pin is disabled.
10	SIMOPDIS0		SPISIMO[0] pull control disable. This bit disables pull control capability for the SPISIMO[0] pin if it is in input mode, regardless of whether it is in functional or GIO mode.
		0	Pull control on the SPISIMO[0] pin is enabled.
		1	Pull control on the SPISIMO[0] pin is disabled.
9	CLKPDIS		SPICLK pull control disable. This bit disables pull control capability for the SPICLK pin if it is in input mode, regardless of whether it is in functional or GIO mode.
		0	Pull control on the SPICLK pin is enabled.
		1	Pull control on the SPICLK pin is disabled.
8	ENAPDIS		$\overline{\text{SPIENA}}$ pull control disable. This bit disables pull control capability for the $\overline{\text{SPIENA}}$ pin if it is in input mode, regardless of whether it is in functional or GIO mode.
		0	Pull control on the $\overline{\text{SPIENA}}$ pin is enabled.
		1	Pull control on the $\overline{\text{SPIENA}}$ pin is disabled.
7-0	SCSPDIS		$\overline{\text{SPICS}}$ pull control disable. This bit disables pull control capability for each $\overline{\text{SPICS}}$ pin if it is in input mode, regardless of whether it is in functional or GIO mode.
		0	Pull control on the $\overline{\text{SPICS}}$ pin is enabled.
		1	Pull control on the $\overline{\text{SPICS}}$ pin is disabled.

11.1.4.8.14 SPI Pin Control Register 8 (SPIPC8)

Note

Register bits vary by device

Register bits 31:24 and 23:16 of this register reflect the number of SIMO/SOMI data lines per device. On devices with 8 data-line support, all of bits 31 to 16 are implemented. On devices with less than 8 data lines, only a subset of these bits are available. Unimplemented bits return 0 upon read and are not writable.

Note

Default Register Value

The default values of these register bits vary by device. See your device datasheet for information about default pin states, which correspond to the register reset values (see the pin-list table).

Figure 11-65. SPI Pin Control Register 8 (SPIPC8) [offset = 34h]

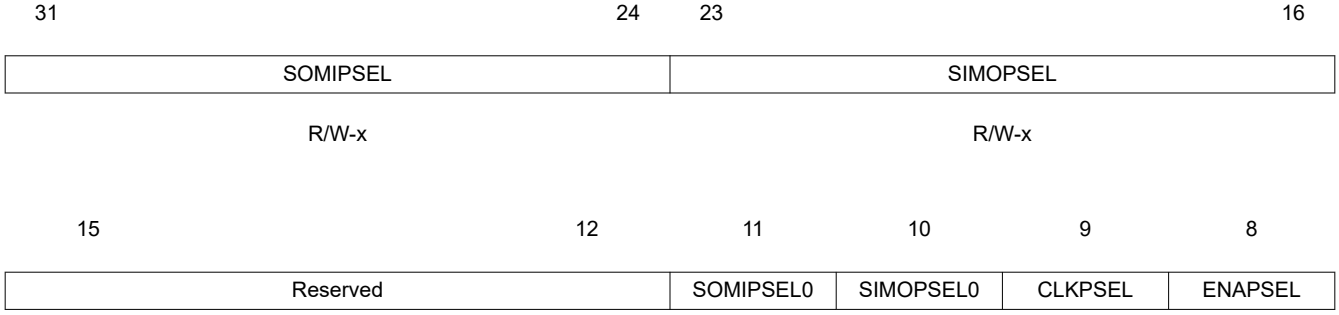

Copyright © 2025 Texas Instruments Incorporated

R-0	R/W-x	R/W-x	R/W-x	R/W-x

7 0

SCSPSEL

R/W-x

LEGEND: R/W = Read/Write; R = Read only; *-n* = value after reset; -x = value varies by device

Table 11-201. SPI Pin Control Register 8 (SPIPC8) Field Descriptions

Bit	Field	Value	Description
31-24	SOMIPSEL		SPISOMI[x] pull select. This bit selects the type of pull logic for each SPISOMI[x] pin.
			Note: Bit 11 or bit 24 can be used to set pull-select for SPISOMI[0]. If a 32-bit write is performed, bit 11 will have priority over bit 24.
		0	Pull down on the SPISOMI[x] pin.
		1	Pull up on the SPISOMI[x] pin.
23-16	SIMOPSEL		SPISIMO[x] pull select. This bit selects the type of pull logic for each SPISIMO[x] pin.
			Note: Bit 10 or bit 16 can be used to set pull-select for SPISIMO[0]. If a 32-bit write is performed, bit 10 will have priority over bit 16.
		0	Pull down on the SPISIMO[x] pin.
		1	Pull up on the SPISIMO[x] pin.
15-12	Reserved	0	Reads return 0. Writes have no effect.
11	SOMIPSEL0		SPISOMI[0] pull select. This bit selects the type of pull logic at the SPISOMI[0] pin.
		0	Pull down on the SPISOMI[0] pin.
		1	Pull up on the SPISOMI[0] pin.
10	SIMOPSEL0		SPISIMO[0] pull select. This bit selects the type of pull logic at the SPISIMO[0] pin.
		0	Pull down on the SPISIMO[0] pin.
		1	Pull up on the SPISIMO[0] pin.
9	CLKPSEL		SPICLK pull select. This bit selects the type of pull logic at the SPICLK pin.
		0	Pull down on the SPICLK pin.
		1	Pull up on the SPICLK pin.
8	ENAPSEL		$\overline{\text{SPIENA}}$ pull select. This bit selects the type of pull logic at the $\overline{\text{SPIENA}}$ pin.
		0	Pull down on the $\overline{\text{SPIENA}}$ pin.
		1	Pull up on the $\overline{\text{SPIENA}}$ pin.
7-0	SCSPSEL		$\overline{\text{SPICS}}$ pull select. This bit selects the type of pull logic for each $\overline{\text{SPICS}}$ pin.
		0	Pull down on the $\overline{\text{SPICS}}$ pin.
		1	Pull up on the $\overline{\text{SPICS}}$ pin.

11.1.4.8.15 SPI Transmit Data Register 0 (SPIDAT0)

Figure 11-66. SPI Transmit Data Register 0 (SPIDAT0) [offset = 38h]

31 16

Reserved

R-0

Copyright © 2025 Texas Instruments Incorporated

15	0
TXDATA	
R/W-0	

LEGEND: R/W = Read/Write; R = Read only; -*n* = value after reset

Table 11-202. SPI Transmit Data Register 0 (SPIDAT0) Field Descriptions

Bit	Field	Value	Description
31-16	Reserved	0	Reads return 0. Writes have no effect.
15-0	TXDATA	0-FFFFh	SPI transmit data. When written, these bits will be copied to the shift register if it is empty. If the shift register is not empty, TXBUF holds the written data. SPIEN (SPICGR1[24]) must be set to 1 before this register can be written to. Writing a 0 to the SPIEN register forces the lower 16 bits of the SPIDAT0 to 0x00. **Note: When this register is read, the contents TXBUF, which holds the latest written data, will be returned.** **Note: Regardless of character length, the transmit word should be right-justified before writing to the SPIDAT1 register.** **Note: The default data format control register for SPIDAT0 is SPIFMT0. However, it is possible to reprogram the DFSEL[1:0] fields of SPIDAT1 before using SPIDAT0, to select a different SPIFMTx register.** **Note: It is highly recommended to use SPIDAT1 register, SPIDAT0 is supported for compatibility reasons.**

Copyright © 2025 Texas Instruments Incorporated

11.1.4.8.16 SPI Transmit Data Register 1 (SPIDAT1)

Note

Writing to only the control fields, bits 28 through 16, does not initiate any SPI transfer in master mode. This feature can be used to set up SPICLK phase or polarity before actually starting the transfer by only updating the DFSEL bit field to select the required phase and polarity combination.

Figure 11-67. SPI Transmit Data Register 1 (SPIDAT1) [offset = 3Ch]



LEGEND: R/W = Read/Write; R = Read only; -*n* = value after reset

Table 11-203. SPI Transmit Data Register 1 (SPIDAT1) Field Descriptions

Bit	Field	Value	Description
31-29	Reserved	0	Reads return 0. Writes have no effect.
28	CSHOLD		Chip select hold mode. The CSHOLD bit is supported in master mode only in compatibility-mode of SPI, (it is ignored in slave mode). CSHOLD defines the behavior of the chip select line at the end of a data transfer.
		0	The chip select signal is deactivated at the end of a transfer after the T2CDELAY time has passed. If two consecutive transfers are dedicated to the same chip select this chip select signal will be deactivated for at least 2VCLK cycles before it is activated again.
		1	The chip select signal is held active at the end of a transfer until a control field with new data and control information is loaded into SPIDAT1. If the new chip select number equals the previous one, the active chip select signal is extended until the end of transfer with CSHOLD cleared, or until the chip-select number changes.
27	Reserved	0	Reads return 0. Writes have no effect.
26	WDEL		Enable the delay counter at the end of the current transaction.
			Note: The WDEL bit is supported in master mode only. In slave mode, this bit will be ignored.
		0	No delay will be inserted. However, the $\overline{\text{SPICS}}$ pins will still be de-activated for at least for 2VCLK cycles if CSHOLD = 0.
			Note: The duration for which the $\overline{\text{SPICS}}$ pin remains deactivated depends upon the time taken to supply a new word after completing the shift operation. If TXBUF is already full, then the $\overline{\text{SPICS}}$ pin will be deasserted for at least two VCLK cycles (if WDEL = 0).
		1	After a transaction, WDELAY of the corresponding data format will be loaded into the delay counter. No transaction will be performed until the WDELAY counter overflows. The $\overline{\text{SPICS}}$ pins will be de-activated for at least (WDELAY + 2) × VCLK_Period duration.
25-24	DFSEL		Data word format select.
		0	Data word format 0 is selected.
		1h	Data word format 1 is selected.
		2h	Data word format 2 is selected.
		3h	Data word format 3 is selected.

Copyright © 2025 Texas Instruments Incorporated

Table 11-203. SPI Transmit Data Register 1 (SPIDAT1) Field Descriptions (continued)

Bit	Field	Value	Description
23-16	CSNR	0-FFh	Chip select (CS) number. CSNR defines the chip select pins that will be activated during the data transfer. CSNR is a bit-mask that controls all chip select pins. See Table 11-204. **Note: If your MibSPI has less than 8 chip select pins, all unused upper bits will be 0. For example, MiBSPI3 has 6 chip select pins, if you write FFh to CSNR, the actual number stored in CSNR is 3Fh.**
15-0	TXDATA	0-FFFFh	Transfer data. When written, these bits are copied to the shift register if it is empty. If the shift register is not empty, then they are held in TXBUF. SPIEN must be set to 1 before this register can be written to. Writing a 0 to SPIEN forces the lower 16 bits of SPIDAT1 to 0x0000. A write to this register (or to the TXDATA field only) drives the contents of the CSNR field on the $\overline{\text{SPICS}}$ pins, if the pins are configured as functional pins (automatic chip select, see Section 11.1.4.2). When this register is read, the contents of TXBUF, which holds the latest data written, will be returned. **Note: Regardless of the character length, the transmit data should be right-justified before writing to the SPIDAT1 register.**

Copyright © 2025 Texas Instruments Incorporated

Table 11-204. Chip Select Number Active

CSNR Value	Chip Select Active:							CSNR Value	Chip Select Active:					
	CS[5](1)	CS[4](1)	CS[3](1)	CS[2](1)	CS[1](1)	CS[0]			CS[5](1)	CS[4](1)	CS[3](1)	CS[2](1)	CS[1](1)	CS[0]
0h	No chip select pin is active.							20h	x					
1h						x		21h	x					x
2h					x			22h	x				x	
3h					x	x		23h	x				x	x
4h				x				24h	x			x		
5h				x		x		25h	x			x		x
6h				x	x			26h	x			x	x	
7h				x	x	x		27h	x			x	x	x
8h			x					28h	x		x			
9h			x			x		29h	x		x			x
Ah			x		x			2Ah	x		x		x	
Bh			x		x	x		2Bh	x		x		x	x
Ch			x	x				2Ch	x		x	x		
Dh			x	x		x		2Dh	x		x	x		x
Eh			x	x	x			2Eh	x		x	x	x	
Fh			x	x	x	x		2Fh	x		x	x	x	x
10h		x						30h	x	x				
11h		x				x		31h	x	x				x
12h		x			x			32h	x	x			x	
13h		x			x	x		33h	x	x			x	x
14h		x		x				34h	x	x		x		
15h		x		x		x		35h	x	x		x		x
16h		x		x	x			36h	x	x		x	x	
17h		x		x	x	x		37h	x	x		x	x	x
18h		x	x					38h	x	x	x			
19h		x	x			x		39h	x	x	x			x
1Ah		x	x		x			3Ah	x	x	x		x	
1Bh		x	x		x	x		3Bh	x	x	x		x	x
1Ch		x	x	x				3Ch	x	x	x	x		
1Dh		x	x	x		x		3Dh	x	x	x	x		x
1Eh		x	x	x	x			3Eh	x	x	x	x	x	
1Fh		x	x	x	x	x		3Fh	x	x	x	x	x	x

(1) If your MibSPI does not have this chip select pin, this bit is 0.

Copyright © 2025 Texas Instruments Incorporated

11.1.4.8.17 SPI Receive Buffer Register (SPIBUF)

Figure 11-68. SPI Receive Buffer Register (SPIBUF) [offset = 40h]

31	30	29	28	27	26	25	24
RXEMPTY	RXOVR	TXFULL	BITERR	DESYNC	PARITYERR	TIMEOUT	DLENERR
R-1	R-0	R-0	R-0	R-0	R-0	R-0	R-0
23							16
LCSNR							
R-0							
15							0
RXDATA							
R-0							

LEGEND: R = Read only; *-n* = value after reset

Table 11-205. SPI Receive Buffer Register (SPIBUF) Field Descriptions

Bit	Field	Value	Description
31	RXEMPTY		Receive data buffer empty. When the host reads the RXDATA field or the entire SPIBUF register, it automatically sets the RXEMPTY flag. When a data transfer is completed, the received data is copied into RXDATA and the RXEMPTY flag is cleared.
		0	New data has been received and copied into RXDATA.
		1	No data has been received since the last read of RXDATA.
			This flag gets set to 1 under the following conditions: • Reading the RXDATA field of the SPIBUF register • Writing a 1 to clear the RXINTFLG bit in the SPI Flag Register (SPIFLG) Write-clearing the RXINTFLG bit before reading the SPIBUF indicates the received data is being ignored. Conversely, RXINTFLG can be cleared by reading the RXDATA field of SPIBUF (or the entire register).
30	RXOVR		Receive data buffer overrun. When a data transfer is completed and the received data is copied into RXBUF while it is already full, RXOVR is set. Overruns always occur to RXBUF, not to SPIBUF; the contents of SPIBUF are overwritten only after it is read by the Peripheral (VBUSP) master (CPU, DMA, or other host processor). If enabled, the RXOVRN interrupt is generated when RXBUF is overwritten, and reading either SPI Flag Register (SPIFLG) or SPIVECTx shows the RXOVRN condition. Two read operations from the SPIBUF register are required to reach the overwritten buffer word (one to read SPIBUF, which then transfers RXDATA into SPIBUF for the second read). **Note: This flag is cleared to 0 when the RXDATA field of the SPIBUF register is read.** **Note: A special condition under which RXOVR flag gets set. If both SPIBUF and RXBUF are already full and while another buffer receive is underway, if any errors such as TIMEOUT, BITERR, and DLEN_ERR occur, then RXOVR in RXBUF and SPI Flag Register (SPIFLG) registers will be set to indicate that the status flags are getting overwritten by the new transfer. This overrun should be treated like a normal receive overrun.**
		0	No receive data overrun condition occurred since last read of the data field.
		1	A receive data overrun condition occurred since last read of the data field.

Copyright © 2025 Texas Instruments Incorporated

Table 11-205. SPI Receive Buffer Register (SPIBUF) Field Descriptions (continued)

Bit	Field	Value	Description
29	TXFULL		Transmit data buffer full. This flag is a read-only flag. Writing into the SPIDAT0 or SPIDAT1 field while the TX shift register is full will automatically set the TXFULL flag. Once the word is copied to the shift register, the TXFULL flag will be cleared. Writing to SPIDAT0 or SPIDAT1 when both TXBUF and the TX shift register are empty does not set the TXFULL flag.
		0	The transmit buffer is empty; SPIDAT0/SPIDAT1 is ready to accept a new data.
		1	The transmit buffer is full; SPIDAT0/SPIDAT1 is not ready to accept new data.
28	BITERR		Bit error. There was a mismatch of internal transmit data and transmitted data.
			Note: This flag is cleared to 0 when the RXDATA field of the SPIBUF register is read.
		0	No bit error occurred.
		1	A bit error occurred. The SPI samples the signal of the transmit pins (master: SIMOx, slave: SOMIx) at the receive point (one-half clock cycle after the transmit point). If the sampled value differs from the transmitted value, a bit error is detected and the BITERR flag is set. Possible reasons for a bit error include noise, an excessively high bit rate, capacitive load, or another master/slave trying to transmit at the same time.
27	DESYNC		Desynchronization of slave device. This bit is valid in master mode only.
			The master monitors the ENA signal coming from the slave device and sets the DESYNC flag if ENA is deactivated before the last reception point or after the last bit is transmitted plus $t_{T2EDELAY}$. If DESYNCENA is set, an interrupt is asserted. Desynchronization can occur if a slave device misses a clock edge coming from the master.
			Note: In the Compatibility Mode MibSPI, under some circumstances it is possible for a desync error detected for the previous buffer to be visible in the current buffer. This is because the receive completion flag/interrupt is generated when the buffer transfer is completed. But desynchronization is detected after the buffer transfer is completed. So, if the VBUS master reads the received data quickly when an RXINT is detected, then the status flag may not reflect the correct desync condition. In multi-buffer mode, the desync flag is always assured to be for the current buffer.
			Note: This flag is cleared to 0 when the RXDATA field of the SPIBUF register is read.
		0	No slave desynchronization is detected.
		1	A slave device is desynchronized.
26	PARITYERR		Parity error. The calculated parity differs from the received parity bit.
			If the parity generator is enabled (selected individually for each buffer) an even or odd parity bit is added at the end of a data word. During reception of the data word, the parity generator calculates the reference parity and compares it to the received parity bit. If a mismatch is detected, the PARITYERR flag is set.
			Note: This flag is cleared to 0 when the RXDATA field of the SPIBUF register is read.
		0	No parity error is detected.
		1	A parity error occurred.
25	TIMEOUT		Time-out because of non-activation of $\overline{\text{SPIENA}}$ pin.
			The SPI generates a time-out when the slave does not respond in time by activating the ENA signal after the chip select signal has been activated. If a time-out condition is detected, the corresponding chip select is deactivated immediately and the TIMEOUT flag is set. In addition, the TIMEOUT flag in the status field of the corresponding buffer and in the SPI Flag Register (SPIFLG) is set.
			Note: This bit is valid only in master mode.
			Note: This flag is cleared to 0 when the RXDATA field of the SPIBUF register is read.
		0	No $\overline{\text{SPIENA}}$ pin time-out occurred.
		1	An $\overline{\text{SPIENA}}$ signal time-out occurred.
24	DLENERR		Data length error flag.
			Note: This flag is cleared to 0 when the RXDATA field of the SPIBUF register is read.
		0	No data-length error occurred.
		1	A data length error occurred.
23-16	LCSNR	0-FFh	Last chip select number. LCSNR in the status field is a copy of CSNR in the corresponding control field. It contains the chip select number that was activated during the last word transfer.

Copyright © 2025 Texas Instruments Incorporated

Table 11-205. SPI Receive Buffer Register (SPIBUF) Field Descriptions (continued)

Bit	Field	Value	Description
15-0	RXDATA	0-FFFFh	SPI receive data. This is the received word, transferred from the receive shift-register at the end of a transfer. Regardless of the programmed character length and the direction of shifting, the received data is stored right-justified in the register.

Copyright © 2025 Texas Instruments Incorporated

11.1.4.8.18 SPI Emulation Register (SPIEMU)

Figure 11-69. SPI Emulation Register (SPIEMU) [offset = 44h]

31	16
Reserved	
R-8000h	
15	**0**
EMU_RXDATA	
R-0	

LEGEND: R = Read only; *-n* = value after reset

Table 11-206. SPI Emulation Register (SPIEMU) Field Descriptions

Bit	Field	Value	Description
31-16	Reserved	8000h	Reads return 0. Writes have no effect.
15-0	EMU_RXDATA	0-FFFFh	SPI receive data. The SPI emulation register is a mirror of the SPIBUF register. The only difference between SPIEMU and SPIBUF is that a read from SPIEMU does not clear any of the status flags.

11.1.4.8.19 SPI Delay Register (SPIDELAY)

Figure 11-70. SPI Delay Register (SPIDELAY) [offset = 48h]

31	24	23	16
C2TDELAY		T2CDELAY	
R/W-0		R/W-0	
15	**8**	**7**	**0**
T2EDELAY		C2EDELAY	
R/W-0		R/W-0	

LEGEND: R/W = Read/Write; *-n* = value after reset

Table 11-207. SPI Delay Register (SPIDELAY) Field Descriptions

Bit	Field	Value	Description
31-24	C2TDELAY	0-FFh	Chip-select-active to transmit-start delay. See Figure 11-71 for an example. C2TDELAY is used only in master mode. It defines a setup time (for the slave device) that delays the data transmission from the chip select active edge by a multiple of VCLK cycles. The setup time value is calculated as follows. $t_{C2TDELAY}$ = (C2TDELAY + 2) × VCLK Period Example: VCLK = 25 MHz -> VCLK Period = 40ns; C2TDELAY = 07h; > $t_{C2TDELAY}$ = 360 ns When the chip select signal becomes active, the slave has to prepare data transfer within 360 ns. **Note: If phase = 1, the delay between SPICS falling edge to the first edge of SPICLK will have an additional 0.5 SPICLK period delay. This delay is as per the SPI protocol.**

Copyright © 2025 Texas Instruments Incorporated

Table 11-207. SPI Delay Register (SPIDELAY) Field Descriptions (continued)

Bit	Field	Value	Description
23-16	T2CDELAY	0-FFh	Transmit-end-to-chip-select-inactive-delay. See Figure 11-72 for an example. T2CDELAY is used only in master mode. It defines a hold time for the slave device that delays the chip select deactivation by a multiple of VCLK cycles after the last bit is transferred. The hold time value is calculated as follows: $t_{T2CDELAY}$ = (T2CDELAY +1) × VCLK Period Example: VCLK = 25 MHz -> VCLK Period = 40ns; T2CDELAY = 03h; > $t_{T2CDELAY}$ = 160 ns After the last data bit (or parity bit) is being transferred the chip select signal is held active for 160 ns. **Note: If phase = 0, then between the last edge of SPICLK and rise-edge of SPICS there will be an additional delay of 0.5 SPICLK period. This is as per the SPI protocol.** Both C2TDELAY and T2CDELAY counters do not have any dependency on the $\overline{\text{SPIENA}}$ pin value. Even if the $\overline{\text{SPIENA}}$ pin is asserted by the slave, the master will continue to delay the start of SPICLK until the C2TDELAY counter overflows. Similarly, even if the $\overline{\text{SPIENA}}$ pin is deasserted by the slave, the master will continue to hold the $\overline{\text{SPICS}}$ pins active until the T2CDELAY counter overflows. In this way, it is assured that the setup and hold times of the $\overline{\text{SPICS}}$ pins are determined by the delay timers alone. To achieve better throughput, it should be ensured that these two timers are kept at the minimum possible values.
15-8	T2EDELAY	0-FFh	Transmit-data-finished to ENA-pin-inactive time-out. T2EDELAY is used in master mode only. It defines a time-out value as a multiple of SPI clock before $\overline{\text{SPIENA}}$ signal has to become inactive and after $\overline{\text{SPICS}}$ becomes inactive. SPICLK depends on which data format is selected. If the slave device is missing one or more clock edges, it becomes de-synchronized. In this case, although the master has finished the data transfer, the slave is still waiting for the missed clock pulses and the ENA signal is not disabled. The T2EDELAY defines a time-out value that triggers the DESYNC flag, if the $\overline{\text{SPIENA}}$ signal is not deactivated in time. The DESYNC flag is set to indicate that the slave device did not de-assert its $\overline{\text{SPIENA}}$ pin in time to acknowledge that it received all bits of the sent word. See Figure 11-73 for an example of this condition. **Note: DESYNC is also set if the SPI detects a de-assertion of $\overline{\text{SPIENA}}$ before the end of the transmission.** The time-out value is calculated as follows: $t_{T2EDELAY}$ = T2EDELAY/SPIclock Example: SPIclock = 8 Mbit/s; T2EDELAY = 10h; > $t_{T2EDELAY}$ = 2 µs The slave device has to disable the ENA signal within 2 µs, otherwise DESYNC is set and an interrupt is asserted (if enabled).
7-0	C2EDELAY	0-FFh	Chip-select-active to ENA-signal-active time-out. C2EDELAY is used only in master mode and it applies only if the addressed slave generates an ENA signal as a hardware handshake response. C2EDELAY defines the maximum time between when the SPI activates the chip-select signal and the addressed slave has to respond by activating the ENA signal. C2EDELAY defines a time-out value as a multiple of SPI clocks. The SPI clock depends on whether data format 0 or data format 1 is selected. See Figure 11-74 for an example of this condition. **Note: If the slave device does not respond with the ENA signal before the time-out value is reached, the TIMEOUT flag in the SPIFLG register is set and a interrupt is asserted (if enabled).** If a time-out occurs, the SPI clears the transmit request of the timed-out buffer, sets the TIMEOUT flag for the current buffer, and continues with the transfer of the next buffer in the sequence that is enabled. The timeout value is calculated as follows: $t_{C2EDELAY}$ = C2EDELAY/SPIclock Example: SPIclock = 8 Mbit/s; C2EDELAY = 30h; > $t_{C2EDELAY}$ = 6 ms The slave device has to activate the ENA signal within 6 ms after the SPI has activated the chip select signal ($\overline{\text{SPICS}}$), otherwise the TIMEOUT flag is set and an interrupt is asserted (if enabled).

Copyright © 2025 Texas Instruments Incorporated

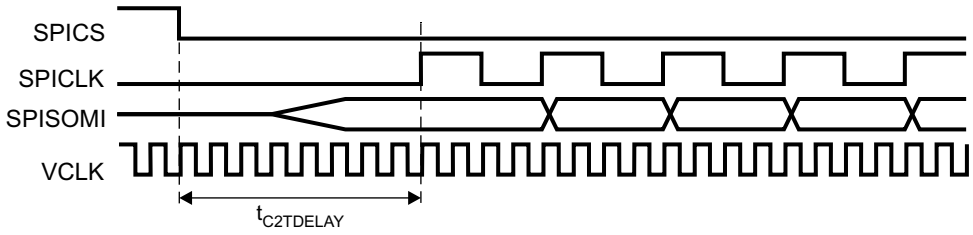

Figure 11-71. Example: $t_{C2TDELAY}$= 8 VCLK Cycles

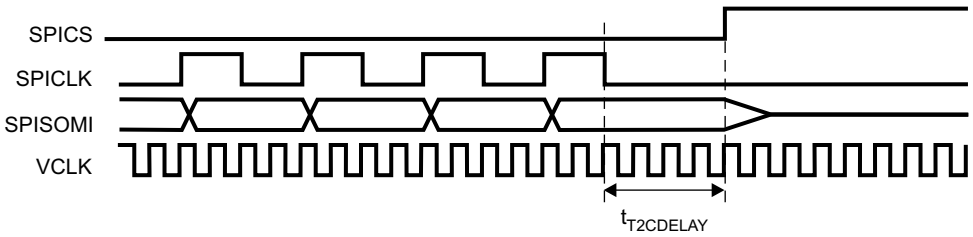

Figure 11-72. Example: $t_{T2CDELAY}$= 4 VCLK Cycles

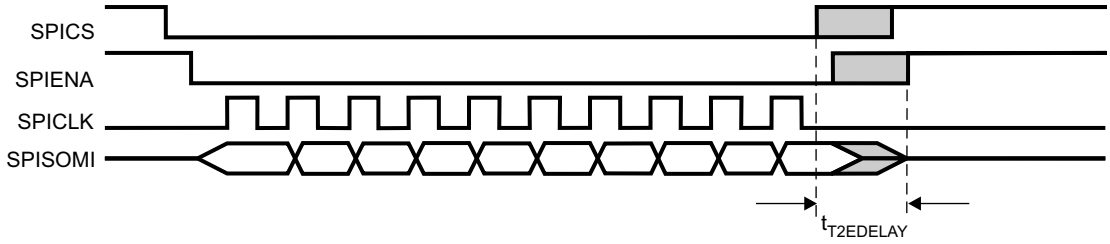

Figure 11-73. Transmit-Data-Finished-to-ENA-Inactive-Timeout

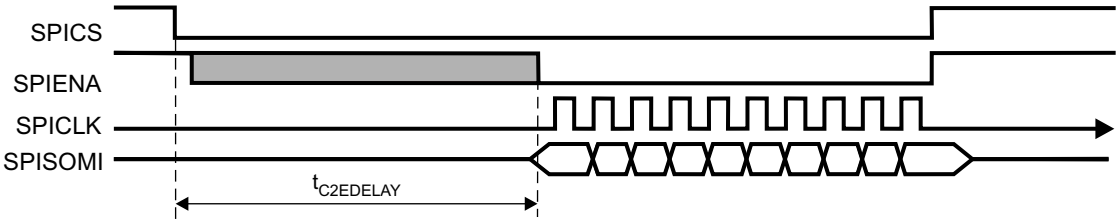

Figure 11-74. Chip-Select-Active-to-ENA-Signal-Active-Timeout

Copyright © 2025 Texas Instruments Incorporated

11.1.4.8.20 SPI Default Chip Select Register (SPIDEF)

Figure 11-75. SPI Default Chip Select Register (SPIDEF) [offset = 4Ch]

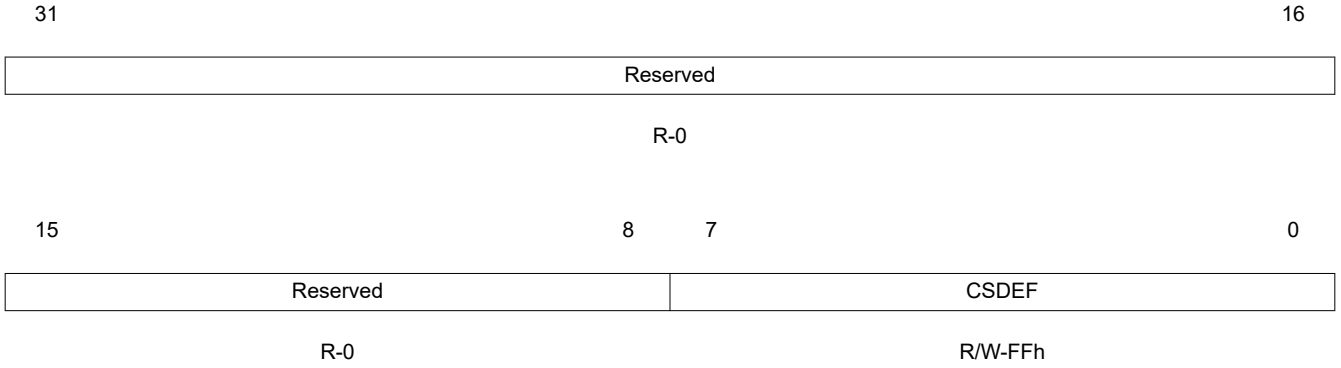

LEGEND: R/W = Read/Write; R = Read only; *-n* = value after reset

Table 11-208. SPI Default Chip Select Register (SPIDEF) Field Descriptions

Bit	Field	Value	Description
31-8	Reserved	0	Reads return 0. Writes have no effect.
7-0	CDEF	0-FFh	Chip select default pattern. Master-mode only. The CSDEF bits are output to the $\overline{\text{SPICS}}$ pins when no transmission is being performed. It allows the user to set a programmable chip-select pattern that deselects all of the SPI slaves.
		0	$\overline{\text{SPICS}}$ is cleared to 0 when no transfer is active.
		1	$\overline{\text{SPICS}}$ is set to 1 when no transfer is active.

Copyright © 2025 Texas Instruments Incorporated

11.1.4.8.21 SPI Data Format Registers (SPIFMT)

Figure 11-76. SPI Data Format Registers (SPIFMT[3:0]) [offset = 5Ch-50h]

31							24
WDELAY							
R/WP-0							
23	22	21	20	19	18	17	16
PARPOL	PARITYENA	WAITENA	SHIFTDIR	HDUPLEX_ ENAx	DIS_CS_ TIMERS	POLARITY	PHASE
R/WP-0	R/WP-0	R/WP-0	R/WP-0	R/WP-0	R/WP-0	R/WP-0	R/WP-0
15				8	7	5	4	0
PRESCALE					Reserved		CHARLEN
R/WP-0					R-0		R/WP-0

LEGEND: R/W = Read/Write; R = Read only; WP = Write in privilege mode only; -*n* = value after reset

Table 11-209. SPI Data Format Registers (SPIFMT) Field Descriptions

Bit	Field	Value	Description
31-24	WDELAY	0-FFh	Delay in between transmissions for data format x (x= 0,1,2,3).Idle time that will be applied at the end of the current transmission if the bit WDEL is set in the current buffer. The delay to be applied is equal to: WDELAY × P_{VCLK} + 2 × P_{VCLK} P_{VCLK} -> Period of VCLK.
23	PARPOL		Parity polarity: even or odd. PARPOLx can be modified in privilege mode only. It can be used for data format x (x= 0,1,2,3).
		0	An even parity flag is added at the end of the transmit data stream.
		1	An odd parity flag is added at the end of the transmit data stream.
22	PARITYENA		Parity enable for data format x.
			No parity generation/ verification is performed for this data format.
		0	A parity bit is transmitted at the end of each transmitted word. At the end of a transfer the parity generator compares the received parity bit with the locally-calculated parity flag. If the parity bits do not match, the RXERR flag is set in the corresponding control field. The parity type (even or odd) can be selected via the PARPOL bit.
		1	**Note: If an uncorrectable error flag is set in a slave-mode SPI, then the wrong parity bit will be transmitted to indicate to the master that there has been some issue with the data parity. The SPISOMI pins will be forced to transmit all 0s, and the parity bit will be transmitted as 1 if even parity is selected and as 0 if odd parity is selected (using the PARPOLx bit of this register). This behavior occurs regardless of an uncorrectable parity error on either TXRAM or RXRAM.**

Copyright © 2025 Texas Instruments Incorporated

Table 11-209. SPI Data Format Registers (SPIFMT) Field Descriptions (continued)

Bit	Field	Value	Description
21	WAITENA		The master waits for the ENA signal from slave for data format x. WAITENA is valid in master mode only. WAITENA enables a flexible SPI network where slaves with ENA signal and slaves without ENA signal can be mixed. WAITENA defines, for each transferred word, whether the addressed slave generates the ENA signal or not.
		0	The SPI does not wait for the ENA signal from the slave and directly starts the transfer.
		1	Before the SPI starts the data transfer it waits for the ENA signal to become low. If the ENA signal is not pulled down by the addressed slave before the internal time-out counter (C2EDELAY) overflows, then the master aborts the transfer and sets the TIMEOUT error flag.
20	SHIFTDIR		Shift direction for data format x. With bit SHIFTDIRx, the shift direction for data format x (x=0,1,2,3) can be selected.
		0	MSB is shifted out first.
		1	LSB is shifted out first.
19	HDUPLEX_ENAx		Half Duplex transfer mode enable for Data Format x. This bit controls the I/O function of SOMI/SIMO lines for a specific requirement where in the case of Master mode, TX pin - SIMO will act as an RX pin, and in the case of Slave mode, RX pin - SIMO will act as a TX pin.
		0	Normal Full Duplex transfer.
		1	If MASTER = 1, SPISIMO pin will act as an RX pin (No TX possible) If MASTER = 0, SPISIMO pin will act as a TX pin (No RX possible). For all normal operations, HDUPLEX_ENAx bits should always remain 0. It is intended for the usage when the SPISIMO pin is used for both TX and RX operations at different times.
18	DIS CS TIMERS		Disable chip-select timers for this format. The C2TDELAY and T2CDELAY timers are by default enabled for all the data format registers. Using this bit, these timers can be disabled for a particular data format, if they are not required. When a master is handling multiple slaves, with varied set-up hold requirement, the application can selectively choose to include or not include the chip-select delay timers for any slaves.
		0	Both C2TDELAY and T2CDELAY counts are inserted for the chip selects.
		1	No C2TDELAY or T2CDELAY is inserted in the chip select timings.
17	POLARITY		SPI data format x clock polarity. POLARITYx defines the clock polarity of data format x. The following restrictions apply when switching clock phase and/or polarity: • In 3-pin/4-pin with $\overline{\text{SPIENA}}$ pin configuration of a slave SPI, the clock phase and polarity cannot be changed on-the-fly between two transfers. The slave should be reset and reconfigured if clock phase/polarity needs to be switched. In summary, SPI format switching is not fully supported in slave mode. • Even while using chip select pins, the polarity of SPICLK can be switched only while the slave is not selected by a valid chip select. The master SPI should ensure that while switching SPICLK polarity, it has deselected all of its slaves. Otherwise, the switching of SPICLK polarity may be incorrectly treated as a clock edge by some slaves.
		0	If POLARITYx is cleared to 0, the SPI clock signal is low-inactive, that is, before and after data transfer the clock signal is low.
		1	If POLARITYx is set to 1, the SPI clock signal is high-inactive, that is, before and after data transfer the clock signal is high.
16	PHASE		SPI data format x clock delay. PHASEx defines the clock delay of data format x.
		0	If PHASEx is cleared to 0, the SPI clock signal is not delayed versus the transmit/receive data stream. The first data bit is transmitted with the first clock edge and the first bit is received with the second (inverse) clock edge.
		1	If PHASEx is set to 1, the SPI clock signal is delayed by a half SPI clock cycle versus the transmit/receive data stream. The first transmit bit has to output prior to the first clock edge. The master and slave receive the first bit with the first edge.

Copyright © 2025 Texas Instruments Incorporated

Table 11-209. SPI Data Format Registers (SPIFMT) Field Descriptions (continued)

Bit	Field	Value	Description
15-8	PRESCALE		SPI data format x prescaler. PRESCALEx determines the bit transfer rate of data format x if the SPI is the network master. PRESCALEx is use to derive SPICLK from VCLK. If the SPI is configured as slave, PRESCALEx **does not need** to be configured. The clock rate for data format x can be calculated as: $BR_{Formatx}$ = VCLK / (PRESCALEx + 1) **Note: When PRESCALEx is cleared to 0, the SPI clock rate defaults to VCLK/2.**
7-5	Reserved	0	Reads return 0. Writes have no effect.
4-0	CHARLEN	0-1Fh	SPI data format x data-word length. CHARLENx defines the word length of data format x. Legal values are 0x02 (data word length = 2 bit) to 10h (data word length = 16). Illegal values, such as 00 or 1Fh are not allowed; their effect is indeterminate.

Copyright © 2025 Texas Instruments Incorporated

11.1.4.8.22 Interrupt Vector 0 (INTVECT0)

Note

The TG interrupt is not available in MibSPI in compatibility mode. Therefore, there is no possibility to access this register in compatibility mode.

Figure 11-77. Interrupt Vector 0 (NTVECT0) [offset = 60h]

31	16
Reserved	
R-0	

15	6	5	1	0
Reserved		INTVECT0		SUSPEND0
R-0		R-0		R-0

LEGEND: R = Read only; *-n* = value after reset

Table 11-210. Transfer Group Interrupt Vector 0 (INTVECT0)

Bit	Field	Value	Description
31-6	Reserved	0	Reads return 0. Writes have no effect.
5-1	INTVECT0		INTVECT0. Interrupt vector for interrupt line INT0. Returns the vector of the pending interrupt at interrupt line INT0. If more than one interrupt is pending, INTVECT0 always references the highest prior interrupt source first. **Note: This field reflects the status of the SPIFLG register in vector format. Any updates to the SPIFLG register will automatically cause updates to this field.**
		0	There is no pending interrupt.
		1h + x	Transfer group x (x = 0 to 15) has a pending interrupt. SUSPEND0 reflects the type of interrupt (*suspend* or *finished*).
		11h	Error Interrupt pending. The lower half of SPIFLG contains more details about the type of error.
		13h	The pending interrupt is a Receive Buffer Overrun interrupt.
		12h	**SPI mode:** The pending interrupt is a Receive Buffer Full interrupt. **Mib mode:** Reserved. This bit combination should not occur.
		14h	**SPI mode:** The pending interrupt is a Transmit Buffer Empty interrupt. **Mib mode:** Reserved. This bit combination should not occur.
		All Other Combinations	**SPI mode:** Reserved. These bit combinations should not occur.
0	SUSPEND0		Transfer suspended / Transfer finished interrupt flag. Every time INTVECT0 is read by the host, the corresponding interrupt flag of the referenced transfer group is cleared and INTVECT0 is updated with the vector coming next in the priority chain.
		0	The interrupt type is a transfer finished interrupt. In other words, the buffer array referenced by INTVECT0 has asserted an interrupt because all of data from the transfer group has been transferred.
		1	The interrupt type is a transfer suspended interrupt. In other words, the transfer group referenced by INTVECT0 has asserted an interrupt because the buffer to be transferred next is in suspend-to-wait mode.

Copyright © 2025 Texas Instruments Incorporated

Note

Reading from the INTVECT0 register when Transmit Empty is indicated does not clear the TXINTFLG flag in the SPI Flag Register (SPIFLG). Writing a new word to the SPIDATx register clears the Transmit Empty interrupt.

Note

In multi-buffer mode, INTVECT0 contains the interrupt for the highest priority transfer group. A read from INTVECT0 automatically causes the next-highest priority transfer group's interrupt status to get loaded into INTVECT0 and its corresponding SUSPEND flag to get loaded into SUSPEND0. The transfer group with the lowest number has the highest priority, and the transfer group with the highest number has the lowest priority.

Reading the INTVECT0 register when the RXOVRN interrupt is indicated in multi-buffer mode does not clear the RXOVRN flag and hence does not clear the vector. The RXOVRN interrupt vector may be cleared in multi-buffer mode either by write-clearing the RXOVRN flag in the SPI Flag Register (SPIFLG) or by reading the RXRAM Overrun Buffer Address Register (RXOVRN_BUF_ADDR).

11.1.4.8.23

11.1.4.8.24 Interrupt Vector 1 (INTVECT1)

Note

The TG interrupt is not available in SPI in compatibility mode compatibility mode. Therefore, there is no possibility to access this register in compatibility mode.

Figure 11-78. Interrupt Vector 1 (INTVECT1) [offset = 64h]

31	16
Reserved	
R-0	

15	6	5	1	0
Reserved		INTVECT1		SUSPEND1
R-0		R-0		R-0

LEGEND: R = Read only; *-n* = value after reset

Table 11-211. Transfer Group Interrupt Vector 1 (INTVECT1)

Bit	Field	Value	Description
31-6	Reserved	0	Reads return 0. Writes have no effect.

Copyright © 2025 Texas Instruments Incorporated

Table 11-211. Transfer Group Interrupt Vector 1 (INTVECT1) (continued)

Bit	Field	Value	Description
5-1	INTVECT1		INTVECT1. Interrupt vector for interrupt line INT1. Returns the vector of the pending interrupt at interrupt line INT1. If more than one interrupt is pending, INTVECT1 always references the highest prior interrupt source first. **Note: This field reflects the status of the SPIFLG register in vector format. Any updates to the SPIFLG register will automatically cause updates to this field.**
		0	There is no pending interrupt. **SPI mode only.**
		11h	Error Interrupt pending. The lower half of SPIINT1 contains more details about the type of error. **SPI mode only.**
		13h	The pending interrupt is a Receive Buffer Overrun interrupt. **SPI mode only.**
		12h	The pending interrupt is a Receive Buffer Full interrupt. **SPI mode only.**
		14h	The pending interrupt is a Transmit Buffer Empty interrupt. **SPI mode only.**
		All Other Combinations	Reserved. These bit combinations should not occur. **SPI mode only.**
0	SUSPEND1		Transfer suspended / Transfer finished interrupt flag. Every time INTVECT1 is read by the host, the corresponding interrupt flag of the referenced transfer group is cleared and INTVECT1 is updated with the vector coming next in the priority chain.
		0	The interrupt type is a transfer finished interrupt. In other words, the buffer array referenced by INTVECT1 has asserted an interrupt because all of data from the transfer group has been transferred.
		1	The interrupt type is a transfer suspended interrupt. In other words, the transfer group referenced by INTVECT1 has asserted an interrupt because the buffer to be transferred next is in suspend-to-wait mode.

Note

Reading from the INTVECT1 register when Transmit Empty is indicated does not clear the TXINTFLG flag in the SPI Flag Register (SPIFLG). Writing a new word to the SPIDATx register clears the Transmit Empty interrupt.

Note

In multi-buffer mode, INTVECT1 contains the interrupt for the highest priority transfer group. A read from INTVECT1 automatically causes the next-highest priority transfer group's interrupt status to get loaded into INTVECT1 and its corresponding SUSPEND flag to get loaded into SUSPEND1. The transfer group with the lowest number has the highest priority, and the transfer group with the highest number has the lowest priority.

Reading the INTVECT1 register when the RXOVRN interrupt is indicated in multi-buffer mode does not clear the RXOVRN flag and hence does not clear the vector. The RXOVRN interrupt vector may be cleared in multi-buffer mode either by write-clearing the RXOVRN flag in the SPI Flag Register (SPIFLG) or by reading the RXOVERN_BUF_ADDR register.

Copyright © 2025 Texas Instruments Incorporated

11.1.4.8.25 SPI Pin Control Register 9 (SPIPC9)

SPIPC9 only applies to SPI2.

Figure 11-79. SPI Pin Control Register 9 (SPIPC9) [offset = 68h]

31	25	24	23	17	16
Reserved		SOMISRS0	Reserved		SIMOSRS0
R-0		R/W-0	R-0		R/W-0

15	12	11	10	9	8	0
Reserved		SOMISRS0	SIMOSRS0	CLKSRS	Reserved	
R-0		R/W-0	R/W-0	R/W-0	R-0	

LEGEND: R/W = Read/Write; R = Read only; -*n* = value after reset

Table 11-212. SPI Pin Control Register 9 (SPIPC9) Field Descriptions

Bit	Field	Value	Description
31-25	Reserved	0	Reads return the value that was last written. Writes have no effect.
24	SOMISRS0		SPI2 SOMI[0] slew control. This bit controls between the fast or slow slew mode. **Note: Duplicate Control Bits for SPI2 SOMI[0]. Bit 24 is not physically implemented. It is a mirror of bit 11. Any write to bit 24 will be reflected on bit 11. When bit 24 and bit 11 are simultaneously written, the value of bit 11 will control the SPI2 SOMI[0] pin. The read value of bit 24 always reflects the value of bit 11.**
		0	Fast mode is enabled; the normal output buffer is used for this pin.
		1	Slow mode is enabled; slew rate control is used for this pin.
23-17	Reserved	0	Reads return the value that was last written. Writes have no effect.
16	SIMOSRS0		SPI2 SIMO[0] slew control. This bit controls between the fast or slow slew mode. **Note: Duplicate Control Bits for SPI2 SIMO[0]. Bit 16 is not physically implemented. It is a mirror of bit 10. Any write to bit 16 will be reflected on bit 10. When bit 16 and bit 10 are simultaneously written, the value of bit 10 will control the SPI2 SIMO[0] pin. The read value of bit 16 always reflects the value of bit 10.**
		0	Fast mode is enabled; the normal output buffer is used for this pin.
		1	Slow mode is enabled; slew rate control is used for this pin.
15-12	Reserved	0	Reads return 0. Writes have no effect.
11	SOMISRS0		SPI2 SOMI[0] slew control. This bit controls between the fast or slow slew mode.
		0	Fast mode is enabled; the normal output buffer is used for this pin.
		1	Slow mode is enabled; slew rate control is used for this pin.
10	SIMOSRS0		SPI2 SIMO[0] slew control. This bit controls between the fast or slow slew mode.
		0	Fast mode is enabled; the normal output buffer is used for this pin.
		1	Slow mode is enabled; slew rate control is used for this pin.
9	CLKSRS		SPI2 CLK slew control. This bit controls between the fast or slow slew mode.
		0	Fast mode is enabled; the normal output buffer is used for this pin.
		1	Slow mode is enabled; slew rate control is used for this pin.
8-0	Reserved	0	Reads return the value that was last written. Writes have no effect.

Copyright © 2025 Texas Instruments Incorporated

11.1.4.8.26 Parallel/Modulo Mode Control Register (SPIPMCTRL)

Note

Do not configure MODCLKPOLx and MMODEx bits since this device does not support modulo mode.

Note

The bits of this register are used in conjunction with the SPIFMTx registers. Each byte of this register corresponds to one of the SPIFMTx registers.

1. Byte0 (Bits 7:0) are used when SPIFMT0 register is selected by DFSEL[1:0] = 00 in the control field of a buffer.

2. Byte1 (Bits 15:8) are used when SPIFMT1 register is selected by DFSEL[1:0] = 01 in the control field of a buffer.

3. Byte2 (Bits 23:16) are used when SPIFMT2 register is selected by DFSEL[1:0] = 10 in the control field of a buffer.

4. Byte3 (Bits 31:24) are used when SPIFMT3 register is selected by DFSEL[1:0] = 11 in the control field of a buffer.

Figure 11-80. Parallel/Modulo Mode Control Register (SPIPMCTRL) [offset = 6Ch]

31	30	29	28	26	25	24
Reserved		MODCLKPOL3	MMODE3		PMODE3	
R-0		R/WP-0	R/WP-0		R/WP-0	

23	22	21	20	18	17	16
Reserved		MODCLKPOL2	MMODE2		PMODE2	
R-0		R/WP-0	R/WP-0		R/WP-0	

15	14	13	12	10	9	8
Reserved		MODCLKPOL1	MMODE1		PMODE1	
R-0		R/WP-0	R/WP-0		R/WP-0	

7	6	5	4	2	1	0
Reserved		MODCLKPOL0	MMODE0		PMODE0	
R-0		R/WP-0	R/WP-0		R/WP-0	

LEGEND: R/W = Read/Write; R = Read only; WP = Write in privilege mode only; -*n* = value after reset

Table 11-213. SPI Parallel/Modulo Mode Control Register (SPIPMCTRL) Field Descriptions

Bit	Field	Value	Description
31-30	Reserved	0	Reads return 0. Writes have no effect.

Copyright © 2025 Texas Instruments Incorporated

Table 11-213. SPI Parallel/Modulo Mode Control Register (SPIPMCTRL) Field Descriptions (continued)

Bit	Field	Value	Description
29	MODCLKPOL3		Modulo mode SPICLK polarity. This bit determines the polarity of the SPICLK in modulo mode only. If the MMODE3 bits are 000, this bit will be ignored.
		0	Normal SPICLK in all the modes.
		1	Polarity of the SPICLK will be inverted if Modulo mode is selected.
28-26	MMODE3		These bits determine whether the SPI/MibSPI operates with 1, 2, 4, 5, or 6 data lines (if modulo option is supported by the module).
		0	Normal single data line mode - default (PMODE3 should be set to 00)
		1h	2-data line mode (PMODE3 should be set to 00)
		2h	3-data line mode (PMODE3 should be set to 00)
		3h	4-data line mode (PMODE3 should be set to 00)
		4h	5-data line mode (PMODE3 should be set to 00)
		5h	6-data line mode (PMODE3 should be set to 01)
		6h-7h	Reserved
25-24	PMODE3		Parallel mode bits determine whether the SPI/MibSPI operates with 1, 2, 4, or 8 data lines.
		0	Normal operation/1-data line (MMODE3 should be set to 000)
		1h	2-data line mode (MMODE3 should be set to 000)
		2h	4-data line mode (MMODE3 should be set to 000)
		3h	8-data line mode (MMODE3 should be set to 000)
23-22	Reserved	0	Reads return 0. Writes have no effect.
21	MODCLKPOL2		Modulo mode SPICLK polarity. This bit determines the polarity of the SPICLK in modulo mode only. If the MMODE2 bits are 000, this bit will be ignored.
		0	Normal SPICLK in all the modes.
		1	Polarity of the SPICLK will be inverted if Modulo mode is selected.
20-18	MMODE2		These bits determine whether the SPI/MibSPI operates with 1, 2, 4, 5, or 6 data lines (if modulo option is supported by the module).
		0	1-data line Mode - default (PMODE2 should be set to 00)
		1h	2-data line Mode (PMODE2 should be set to 00)
		2h	3-data line mode (PMODE2 should be set to 00)
		3h	4-data line mode (PMODE2 should be set to 00)
		4h	5-data line mode (PMODE2 should be set to 00)
		5h	6-data line mode (PMODE2 should be set to 01)
		6h-7h	Reserved
17-16	PMODE2		Parallel mode bits determine whether the SPI/MibSPI operates with 1, 2, 4, or 8 data lines.
		0	Normal operation/1-data line (MMODE2 should be set to 000)
		1h	2-data line mode (MMODE2 should be set to 000)
		2h	4-data line mode (MMODE2 should be set to 000)
		3h	8-data line mode (MMODE2 should be set to 000)
15-14	Reserved	0	Reads return 0. Writes have no effect.
13	MODCLKPOL1		Modulo mode SPICLK polarity. This bit determines the polarity of the SPICLK in modulo mode only. If the MMODE1 bits are 000, this bit will be ignored.
		0	Normal SPICLK in all the modes.
		1	Polarity of the SPICLK will be inverted if Modulo mode is selected.

Copyright © 2025 Texas Instruments Incorporated

Table 11-213. SPI Parallel/Modulo Mode Control Register (SPIPMCTRL) Field Descriptions (continued)

Bit	Field	Value	Description
12-10	MMODE1		These bits determine whether the SPI/MibSPI operates with 1, 2, 4, 5, or 6 data lines (if modulo option is supported by the module).
		0	1-data line mode - default (PMODE1 should be set to 00)
		1h	2-data line mode (PMODE1 should be set to 00)
		2h	3-data line mode (PMODE1 should be set to 00)
		3h	4-data line mode (PMODE1 should be set to 00)
		4h	5-data line mode (PMODE1 should be set to 00)
		5h	6-data line mode (PMODE1 should be set to 01)
		6h-7h	Reserved
9-8	PMODE1		Parallel mode bits determine whether the SPI/MibSPI operates with 1, 2, 4, or 8 data lines.
		0	Normal operation/1-data line (MMODE1 should be set to 000)
		1h	2-data line mode (MMODE1 should be set to 000)
		2h	4-data line mode (MMODE1 should be set to 000)
		3h	8-data line mode (MMODE1 should be set to 000)
7-6	Reserved	0	Reads return 0. Writes have no effect.
5	MODCLKPOL0		Modulo mode SPICLK polarity. This bit determines the polarity of the SPICLK in modulo mode only. If the MMODE0 bits are 000, this bit will be ignored.
		0	Normal SPICLK in all the modes.
		1	Polarity of the SPICLK will be inverted if Modulo mode is selected.
4-2	MMODE0		These bits determine whether the SPI/MibSPI operates with 1, 2, 4, 5, or 6 data lines (if modulo option is supported by the module).
		0	1-data line mode - default (PMODE0 should be set to 00)
		1h	2-data line mode (PMODE0 should be set to 00)
		2h	3-data line mode (PMODE0 should be set to 00)
		3h	4-data line mode (PMODE0 should be set to 00)
		4h	5-data line mode (PMODE0 should be set to 00)
		5h	6-data line mode (PMODE0 should be set to 01)
		6h-7h	Reserved
1-0	PMODE0		Parallel mode bits determine whether the SPI/MibSPI operates with 1, 2, 4, or 8 data lines.
		0	Normal operation/1-data line (MMODE0 should be set to 000)
		1h	2-data line mode (MMODE0 should be set to 000)
		2h	4-data line mode (MMODE0 should be set to 000)
		3h	8-data line mode (MMODE0 should be set to 000)

Copyright © 2025 Texas Instruments Incorporated

11.1.4.8.27 Multi-buffer Mode Enable Register (MIBSPIE)

Note

Accessibility of Multi-Buffer RAM

The multi-buffer RAM is not accessible unless the MSPIENA bit set to 1. The only exception to this is in test mode, where, by setting RXRAMACCESS to 1, the multi-buffer RAM can be fully accessed for both read and write.

Figure 11-81. Multi-buffer Mode Enable Register (MIBSPIE) [offset = 70h]

31	17	16
Reserved		RXRAM_ACCESS
R-0		R/WP-0

15	1	0
Reserved		MSPIENA
R-0		R/WP-0

LEGEND: R/W = Read/Write; R = Read only; WP = Write in privilege mode only; -*n* = value after reset

Table 11-214. Multi-buffer Mode Enable Register (MIBSPIE) Field Descriptions

Bit	Field	Value	Description
31-17	Reserved	0	Reads return 0. Writes have no effect.
16	RXRAM ACCESS		Receive-RAM access control. During normal operating mode of SPI, the receive data/status portion of multi-buffer RAM is read-only. To enable testing of receive RAM, direct read/write access is enabled by setting this bit.
		0	The RX portion of multi-buffer RAM is not writable by the CPU.
		1	The whole of multi-buffer RAM is fully accessible for read/write by the CPU.
			Note: The RX RAM ACCESS bit remains 0 after reset and it should remain cleared to 0 at all times, except when testing the RAM. SPI should be given a local reset by using the nRESET (SPIGCR0[0]) bit after RAM testing is performed so that the multi-buffer RAM gets re-initialized.
15-1	Reserved	0	Reads return 0. Writes have no effect.
0	MSPIENA		Multi-buffer mode enable. After power-up or reset, MSPIENA remains cleared, which means that the SPI runs in compatibility mode by default. If multi-buffer mode is desired, this register should be configured first after configuring the SPIGCR0 register. If MSPIENA is not set to 1, the multi-buffer mode registers are not writable.
		0	The SPI runs in compatibility mode, that is, in this mode the MibSPI is fully code-compliant to the standard device SPI. No multi-buffered-mode features are supported.
		1	The SPI is configured to run in multi-buffer mode.

Note

Accessibility of Registers

Registers from this offset address onwards are not accessible in SPI compatibility mode. They are accessible only in the multi-buffer mode.

Copyright © 2025 Texas Instruments Incorporated

11.1.4.8.28 TG Interrupt Enable Set Register (TGITENST)

The register TGITENST contains the TG interrupt enable flags for transfer-finished and for transfer-suspended events. Each of the enable bits in the higher half-word and the lower half-word of TGITENST belongs to one TG.

The register map shown in Figure 11-82 and Table 11-215 represents a super-set device with the maximum number of TGs (16) assumed. The actual number of bits available varies per device.

Figure 11-82. TG Interrupt Enable Set Register (TGITENST) [offset = 74h]

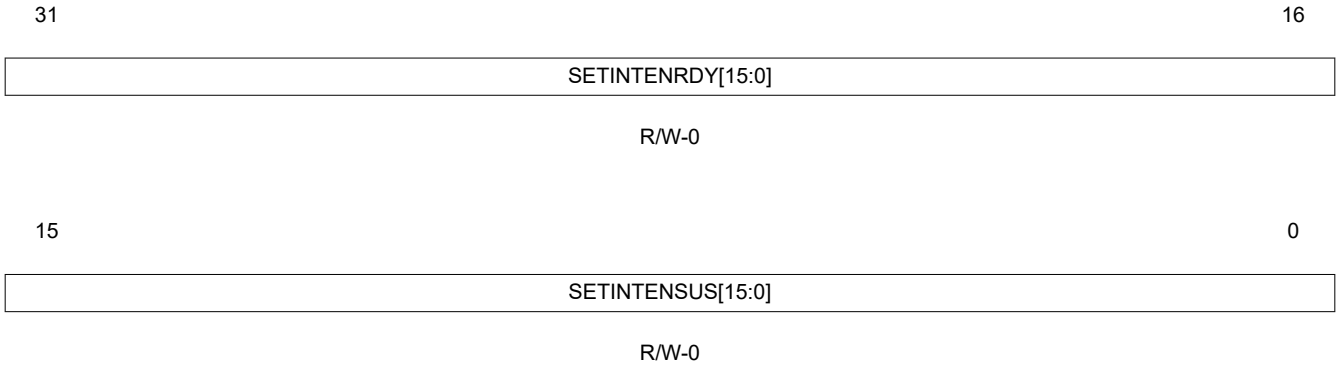

LEGEND: R/W = Read/Write; -*n* = value after reset

Table 11-215. TG Interrupt Enable Set Register (TGITENST) Field Descriptions

Bit	Field	Value	Description
31-16	SETINTENRDY[*n*]		TG interrupt set (enable) when transfer finished. Bit 16 corresponds to TG0, bit 17 corresponds to TG1, and so on.
		0	Read: The TGx-completed interrupt is disabled. This interrupt does not get generated when TGx completes. Write: A write of 0 to this bit has no effect.
		1	Read: The TGx-completed interrupt is enabled. The interrupt gets generated when TGx completes. Write: Enable the TGx-completed interrupt. The interrupt gets generated when TGx completes.
15-0	SETINTENSUS[*n*]		TG interrupt set (enabled) when transfer suspended. Bit 0 corresponds to TG0, bit 1 corresponds to TG1, and so on.
		0	Read: The TGx-completed interrupt is disabled. This interrupt does not get generated when TGx is suspended. Write: A write of 0 to this bit has no effect.
		1	Read: The TGx-completed interrupt is enabled. The interrupt gets generated when TGx is suspended. Write: Enable the TGx-completed interrupt. The interrupt gets generated when TGx is suspended.

Copyright © 2025 Texas Instruments Incorporated

11.1.4.8.29 TG Interrupt Enable Clear Register (TGITENCR)

The register TGITENCR is used to clear the interrupt enables for the TG-completed interrupt and the TG-suspended interrupts.

The register map shown in Figure 11-83 and Table 11-216 represents a super-set device with the maximum number of TGs (16) assumed. The actual number of bits available varies per device.

Figure 11-83. TG Interrupt Enable Clear Register (TGITENCR) [offset = 78h]

31	16
CLRINTENRDY[15:0]	
R/W-0	

15	0
CLRINTENSUS[15:0]	
R/W-0	

LEGEND: R/W = Read/Write; -*n* = value after reset

Table 11-216. TG Interrupt Enable Clear Register (TGITENCR) Field Descriptions

Bit	Field	Value	Description
31-16	CLRINTENRDY[*n*]		TG interrupt clear (disabled) when transfer finished. Bit 16 corresponds to TG0, bit 17 corresponds to TG1, and so on.
		0	Read: The TGx-completed interrupt is disabled. This interrupt does not get generated when TGx completes. Write: A write of 0 to this bit has no effect.
		1	Read: The TGx-completed interrupt is enabled. The interrupt gets generated when TGx completes. Write: Disable the TGx-completed interrupt. The interrupt does not get generated when TGx completes.
15-0	CLRINTENSUS[*n*]		TG interrupt clear (disabled) when transfer suspended. Bit 0 corresponds to TG0, bit 1 corresponds to TG1, and so on.
		0	Read: The TGx-completed interrupt is disabled. This interrupt does not get generated when TGx is suspended. Write: A write of 0 to this bit has no effect.
		1	Read: The TGx-completed interrupt is enabled. The interrupt gets generated when TGx is suspended. Write: Disable the TGx-completed interrupt. The interrupt does not get generated when TGx is suspended.

Copyright © 2025 Texas Instruments Incorporated

11.1.4.8.30 Transfer Group Interrupt Level Set Register (TGITLVST)

The register TGITLVST sets the level of interrupts for transfer completed interrupt and for transfer suspended interrupt to level 1.

The register map shown in Figure 11-84 andTable 11-217 represents a super-set device with the maximum number of TGs (16) assumed. The actual number of bits available varies per device.

Figure 11-84. Transfer Group Interrupt Level Set Register (TGITLVST) [offset = 7Ch]

31	16
SETINTLVLRDY[15:0]	
R/W-0	

15	0
SETINTLVLSUS[15:0]	
R/W-0	

LEGEND: R/W = Read/Write; -*n* = value after reset

Table 11-217. Transfer Group Interrupt Level Set Register (TGITLVST) Field Descriptions

Bit	Field	Value	Description
31-16	SETINTLVLRDY[*n*]		Transfer-group completed interrupt level set. Bit 16 corresponds to TG0, bit 17 corresponds to TG1, and so on.
		0	Read: The TGx-completed interrupt is set to INT0. Write: A write of 0 to this bit has no effect.
		1	Read: The TGx-completed interrupt is set to INT1. Write: Set the TGx-completed interrupt to INT1.
15-0	SETINTLVLSUS[*n*]		Transfer-group suspended interrupt level set. Bit 0 corresponds to TG0, bit 1 corresponds to TG1, and so on.
		0	Read: The TGx-suspended interrupt is set to INT0. Write: A write of 0 to this bit has no effect.
		1	Read: The TGx-suspended interrupt is set to INT1. Write: Set the TGx-suspended interrupt to INT1.

Copyright © 2025 Texas Instruments Incorporated

11.1.4.8.31 Transfer Group Interrupt Level Clear Register (TGITLVCR)

The register TGITLVCR clears the level of interrupts for transfer completed interrupt and for transfer suspended interrupt to level 0.

The register map shown in Figure 11-85 and Table 11-218 represents a super-set device with the maximum number of TGs (16) assumed. The actual number of bits available varies per device.

Figure 11-85. Transfer Group Interrupt Level Clear Register (TGITLVCR) [offset = 80h]

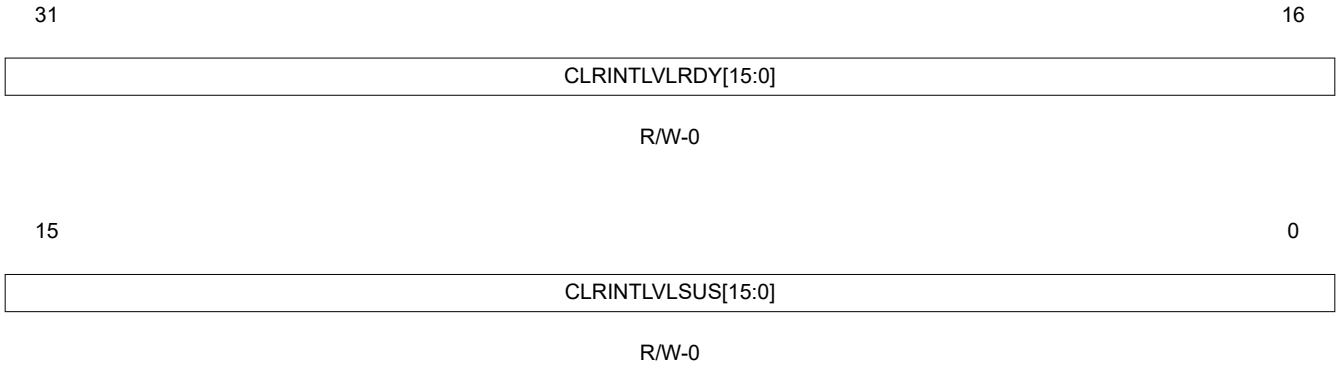

LEGEND: R/W = Read/Write; -*n* = value after reset

Table 11-218. Transfer Group Interrupt Level Clear Register (TGITLVCR) Field Descriptions

Bit	Field	Value	Description
31-16	CLRINTLVLRDY[*n*]		Transfer-group completed interrupt level clear. Bit 16 corresponds to TG0, bit 17 corresponds to TG1, and so on.
		0	Read: The TGx-completed interrupt is set to INT0. Write: A write of 0 to this bit has no effect.
		1	Read: The TGx-completed interrupt is set to INT1. Write: Clear the TGx-completed interrupt to INT0.
15-0	CLRINTLVLSUS[*n*]		Transfer group suspended interrupt level clear. Bit 0 corresponds to TG0, bit 1 corresponds to TG1, and so on.
		0	Read: The TGx-suspended interrupt is set to INT0. Write: A write of 0 to this bit has no effect.
		1	Read: The TGx-suspended interrupt is set to INT1. Write: Clear the TGx-suspended interrupt to INT0.

Copyright © 2025 Texas Instruments Incorporated

11.1.4.8.32 Transfer Group Interrupt Flag Register (TGINTFLG)

The TGINTFLG register comprises the transfer group interrupt flags for transfer-completed interrupts (INTFLGRDYx) and for transfer-suspended interrupts (INTFLGSUSx). Each of the interrupt flags in the higher half-word and the lower half-word of TGINTFLG belongs to one TG.

The register map shown in Figure 11-86 and Table 11-219 represents a super-set device with the maximum number of TGs (16) assumed. The actual number of bits available varies per device.

Figure 11-86. Transfer Group Interrupt Flag Register (TGINTFLG) [offset = 84h]

31	16
INTFLGRDY[15:0]	
R/W1C-0	

15	0
INTFLGSUS[15:0]	
R/W1C-0	

LEGEND: R/W = Read/Write; W1C = Write 1 to clear; -*n* = value after reset

Table 11-219. Transfer Group Interrupt Flag Register (TGINTFLG) Field Descriptions

Bit	Field	Value	Description
31-16	INTFLGRDY[*n*]		Transfer-group interrupt flag for a transfer-completed interrupt. Bit 16 corresponds to TG0, bit 17 corresponds to TG1, and so on. **Note: Read Clear Behavior. Reading the interrupt vector registers TGINTVECT0 or TGINTVECT1 automatically clears the interrupt flag bit INTFLGRDYx referenced by the vector number given by INTVECT0/INTVECT1 bits, if the SUSPEND[0:1] bit in the vector registers is 0.**
		0	Read: No transfer-completed interrupt occurred since last clearing of the INTFLGRDYx flag. Write: A write of 0 to this bit has no effect.
		1	Read: A transfer finished interrupt from transfer group x occurred. No matter whether the interrupt is enabled or disabled (INTENRDYx = don't care) or whether the interrupt is mapped to INT0 or INT1, INTFLGRDYx is set right after the transfer from TGx is finished. Write: The corresponding bit flag is cleared.
15-0	INTFLGSUS[*n*]		Transfer-group interrupt flag for a transfer-suspend interrupt. Bit 0 corresponds to TG0, bit 1 corresponds to TG1, and so on. **Note: Read Clear Behavior. Reading the interrupt vector registers TGINTVECT0 or TGINTVECT1 automatically clears the interrupt flag bit INTFLGSUSx referenced by the vector number given by INTVECT0/INTVECT1 bits, if the SUSPEND[0:1] bit in the corresponding vector registers is 1.**
		0	Read: No transfer-suspended interrupt occurred since the last clearing of the INTFLGSUSx flag. Write: A write of 0 to this bit has no effect.
		1	Read: A transfer-suspended interrupt from TGx occurred. No matter whether the interrupt is enabled or disabled (INTENSUSx = don't care) or whether the interrupt is mapped to INT0 or INT1, INTFLGSUSx is set right after the transfer from transfer group x is suspended. Write: The corresponding bit flag is cleared.

Copyright © 2025 Texas Instruments Incorporated

11.1.4.8.33 Tick Count Register (TICKCNT)

One of the trigger sources for TGs is an internal periodic time trigger. This time trigger is called a tick counter and is basically a down-counter with a preload/reload value. Every time the tick counter detects an underflow it reloads the initial value and toggles the trigger signal provided to the TGs.

The trigger signal, shown in Figure 11-87 as a square wave, illustrates the different trigger event types for the TGs (for example, rising edge, falling edge, and both edges).

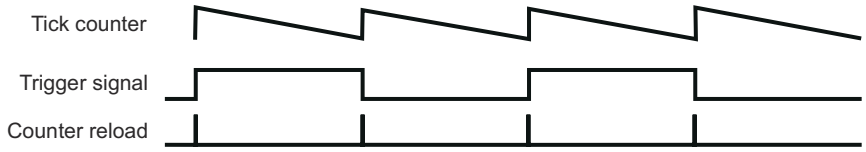

Figure 11-87. Tick Counter Operation

This register is shown in Figure 11-88 and described in Table 11-220.

Figure 11-88. Tick Count Register (TICKCNT) [offset = 90h]

31	30	29	28	27	...	16
TICKENA	RELOAD	CLKCTRL	Reserved			
R/W-0	R/S-0	R/W-0	R-0			

15	...	0
TICKVALUE		
R/W-0		

LEGEND: R/W = Read/Write; R = Read only; S = Set; -*n* = value after reset

Table 11-220. Tick Count Register (TICKCNT) Field Descriptions

Bit	Field	Value	Description
31	TICKENA		Tick counter enable.
		0	The internal tick counter is disabled. The counter value remains unchanged.
			Note: When the tick counter is disabled, the trigger signal is forced low.
		1	The internal tick counter is enabled and is clocked by the clock source selected by CLKCTRL. When TICKENA goes from 0 to 1, the tick counter is automatically loaded with the contents of TICKVALUE.
30	RELOAD		Pre-load the tick counter. RELOAD is a set-only bit; writing a 1 to it reloads the tick counter with the value stored in TICKVALUE. Reading RELOAD always returns a 0.
			Note: When the tick counter is reloaded by the RELOAD bit, the trigger signal is not toggled.
29-28	CLKCTRL		Tick counter clock source control. CLKCTRL defines the clock source that is used to clock the internal tick counter.
		0	SPICLK of data word format 0 is selected as the clock source of the tick counter.
		1h	SPICLK of data word format 1 is selected as the clock source of the tick counter.
		2h	SPICLK of data word format 2 is selected as the clock source of the tick counter.
		3h	SPICLK of data word format 3 is selected as the clock source of the tick counter.
27-16	Reserved	0	Reads return 0. Writes have no effect.

Copyright © 2025 Texas Instruments Incorporated

Table 11-220. Tick Count Register (TICKCNT) Field Descriptions (continued)

Bit	Field	Value	Description
15-0	TICKVALUE	0-FFFFh	Initial value for the tick counter. TICKVALUE stores the initial value for the tick counter. The tick counter is loaded with the contents of TICKVALUE every time an underflow condition occurs and every time the RELOAD flag is set by the host.

Copyright © 2025 Texas Instruments Incorporated

11.1.4.8.34 Last TG End Pointer (LTGPEND)

Figure 11-89. Last TG End Pointer (LTGPEND) [offset = 94h]

31	29	28	24	23	16
Reserved		TG_IN_SERVICE		Reserved	
R-0		R-0		R-0	

15	14	8	7	0
Rsvd	LPEND		Reserved	
R-0	R/W-0		R-0	

LEGEND: R/W = Read/Write; R = Read only; *-n* = value after reset

Table 11-221. Last TG End Pointer (LTGPEND) Field Descriptions

Bit	Field	Value	Description
31-29	Reserved	0	Reads return 0. Writes have no effect.
28-24	TG_IN_SERVICE		The TG number currently being serviced by the sequencer. These bits indicate the current TG that is being serviced. This field can generally be used for code debugging.
		0	No TG is being serviced by the sequencer.
		1h	TG0 is being serviced by the sequencer.
		:	:
		10h	TG15 is being serviced by the sequencer. **Note: The number of transfer groups varies by device.**
		11h-1Fh	Invalid values.
23-15	Reserved	0	Reads return 0. Writes have no effect.
14-8	LPEND	0-7Fh	Last TG end pointer. Usually the TG end address (PEND) is inherently defined by the start value of the starting pointer of the subsequent TG (PSTART). The TG ends one word before the next TG starts (PEND[x] = PSTART[x+1] - 1). For a full configuration of MibSPI, the last TG has no subsequent TG, that is, no end address is defined. Therefore, LPEND has to be programmed to specify explicitly the end address of the last TG. **Note: When using all 8 transfer groups, program the LPEND bits to define the end of the last transfer group. When using less than 8 transfer groups, leave the LPEND bits programmed to point to the end of the buffer and create a dummy transfer group that defines the end of your last intentional transfer group and occupies all the remaining buffer space.**
7-0	Reserved	0	Reads return 0. Writes have no effect.

Copyright © 2025 Texas Instruments Incorporated

11.1.4.8.35 TGx Control Registers (TGxCTRL)

Each TG can be configured via one dedicated control register. The register description shows one control register (x) that is identical for all TGs. For example, the control register for TG2 is named TG2CTRL and is located at *base address + 98h + 4 × 2*. The actual number of available control registers varies by device.

Figure 11-90. MibSPI TG Control Registers (TGxCTRL) [offsets = 98h-D4h]

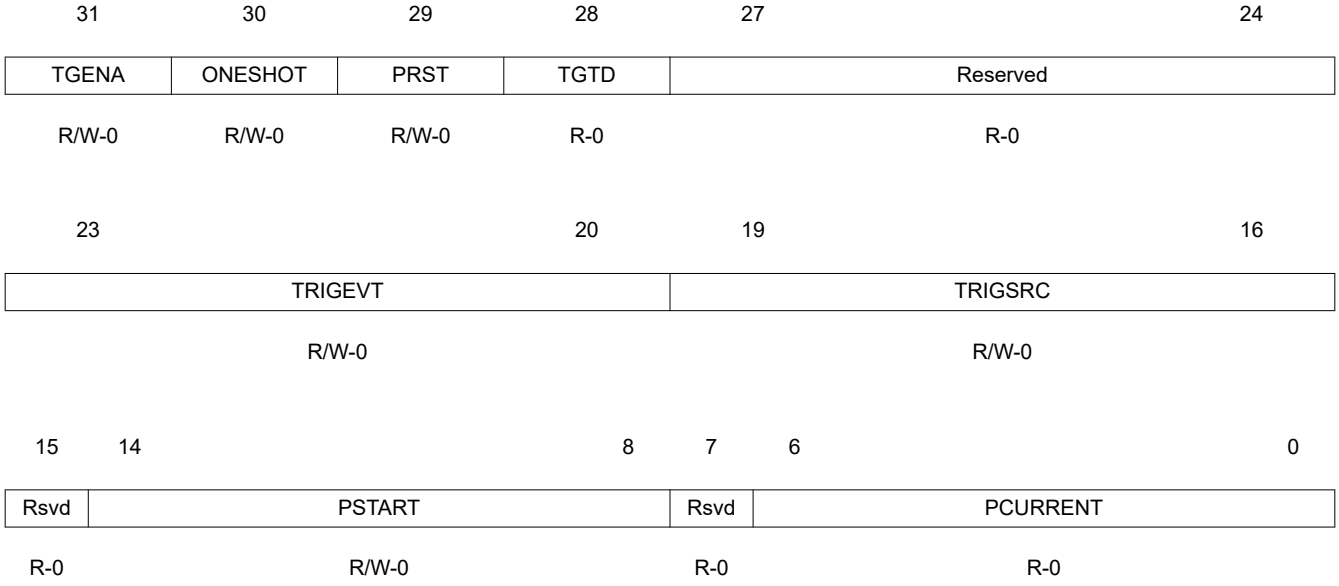

LEGEND: R/W = Read/Write; R = Read only; *-n* = value after reset

Table 11-222. TG Control Registers (TGxCTRL) Field Descriptions

Bit	Field	Value	Description
31	TGENA		TGx enable. If the correct event (TRIGEVTx) occurs at the selected source (TRIGSRCx), a group transfer is initiated if no higher-priority TG is in active-transfer mode or if one or more higher-priority TGs are in transfer-suspend mode. Disabling a TG while a transfer is ongoing will finish the ongoing word transfer but not the whole group transfer.
		0	TGx is disabled.
		1	TGx is enabled.
30	ONESHOTx		Single transfer for TGx.
		0	TGx initiates a transfer every time a trigger event occurs and TGENA is set.
		1	A transfer from TGx will be performed only once (one shot) after a valid trigger event at the selected trigger source. After the transfer is finished the TGENAx control bit will be cleared and therefore no additional transfer can be triggered before the host enables the TG again. This one shot mode ensures that after one group transfer the host has enough time to read the received data and to provide new transmit data.

Copyright © 2025 Texas Instruments Incorporated

Table 11-222. TG Control Registers (TGxCTRL) Field Descriptions (continued)

Bit	Field	Value	Description
29	PRSTx		TGx pointer reset mode. Configures the way to resolve trigger events during an ongoing transfer. This bit is meaningful only for level-triggered TGs. Edge-triggered TGs cannot be restarted before their completion by another edge. The PRST bit will have no effect on this behavior. **Note: When the PRST bit is set, if the buffer being transferred at the time of a new trigger event is a LOCK, CSHOLD or NOBRK buffer, then only after finishing those transfers, the TG will be restarted. This means that even if the TG is retriggered, the TG will only be restarted after finishing the transfer of the first non-LOCK or non-CSHOLD buffer. In the case of the NOBRK buffer, after completing the ICOUNT number of transfers, the TG will be restarted from its PSTART.** This means that TX control fields such as LOCK and CSHOLD, and DMA control fields such as NOBRK have higher priority over anything else. They have the capability to delay the restart of the TG even if it is retriggered when PRST is 1.
		0	If a trigger event occurs during a transfer from TGx, the event is ignored and is not stored internally. The TGx transfer has priority over additional trigger events.
		1	The TGx pointer (PCURRENTx) will be reset to the start address (PSTARTx) when a valid trigger event occurs at the selected trigger source while a transfer from the same TG is ongoing. Every trigger event resets PCURRENTx no matter whether the concerned TG is in transfer mode or not. The trigger events have priority over the ongoing transfer.
28	TGTDx		TG triggered.
		0	TGx has not been triggered or is no longer waiting for service.
		1	TGx has been triggered and is either currently being serviced or waiting for servicing.
27-24	Reserved	0	Reads return 0. Writes have no effect.

Copyright © 2025 Texas Instruments Incorporated

Table 11-222. TG Control Registers (TGxCTRL) Field Descriptions (continued)

Bit	Field	Value		Description
23-20	TRIGEVTx			Type of trigger event. A level-triggered TG can be stopped by de-activating the level trigger. However, the following restrictions apply. • Deactivating the level trigger for a TG during a NOBRK transfer does not stop the transfers until all of the ICOUNT number of buffers are transferred for the NOBRK buffer. Once a NOBRK buffer is prefetched, the trigger event loses control over the TG until the NOBRK buffer transfer is completed. • Once the transfer of a buffer with CSHOLD or LOCK bit set starts, deactivating the trigger level does not stop the transfer until the sequencer completes the transfer of the next non-CSHOLD or non-LOCK buffer in the same TG. • Once the last buffer in a TG is pre-fetched, de-activating the trigger level does not stop the transfer group until the last buffer transfer is completed. This means even if the trigger level is deactivated at the beginning of the penultimate (one-before-last) buffer transfer, the sequencer continues with the same TG until it is completed.
		0	never	Never trigger TGx. This is the default value after reset.
		1h	rising edge	A rising edge (0 to 1) at the selected trigger source (TRIGSRCx) initiates a transfer for TGx
		2h	falling edge	A falling edge (1 to 0) at the selected trigger source (TRIGSRCx) initiates a transfer for TGx
		3h	both edges	Rising and falling edges at the selected trigger source (TRIGSRCx) initiates a transfer for TGx
		4h	Rsvd	Reserved
		5h	high-active	While the selected trigger source (TRIGSRCx) is at a logic-high level (1), the group transfer is continued and at the end of one group, transfer is restarted at the beginning. If the logic level changes to low (0) during an ongoing group transfer, the whole group transfer will be stopped. **Note: If ONESHOTx is set, the transfer is performed only once.**
		6h	low-active	While the selected trigger source (TRIGSRCx) is at a logic-low level (0), the group transfer is continued and at the end of one group, transfer is restarted at the beginning. If the logic level changes to high (1) during an ongoing group transfer, the whole group transfer will be stopped. **Note: If ONESHOTx is set, the transfer is performed only once.**
		7h	always	A repetitive group transfer will be performed. **Note: By setting the TRIGSRC to 0, the TRIGEVT to 7h (ALWAYS), and the ONESHOTx bit to 1, software can trigger this TG. Upon setting the TGENA bit, the TG is immediately triggered.** **Note: If ONESHOTx is set, the transfer is performed only once.**
		8h-Fh	Rsvd	Reserved

Copyright © 2025 Texas Instruments Incorporated

Table 11-222. TG Control Registers (TGxCTRL) Field Descriptions (continued)

Bit	Field	Value	Description
19-16	TRIGSRCx		Trigger source. After reset, the trigger sources of all TGs are disabled.
		0	Disabled
		1h	EXT0 External trigger source 0. The actual source varies per device (for example, HET I/O channel, event pin).
		2h	EXT1 External trigger source 1. The actual source varies per device (for example, HET I/O channel, event pin).
		3h	EXT2 External trigger source 2. The actual source varies per device (for example, HET I/O channel, event pin).
		4h	EXT3 External trigger source 3. The actual source varies per device (for example, HET I/O channel, event pin).
		5h	EXT4 External trigger source 4. The actual source varies per device (for example, HET I/O channel, event pin).
		6h	EXT5 External trigger source 5. The actual source varies per device (for example, HET I/O channel, event pin).
		7h	EXT6 External trigger source 6. The actual source varies per device (for example, HET I/O channel, event pin).
		8h	EXT7 External trigger source 7. The actual source varies per device (for example, HET I/O channel, event pin).
		9h	EXT8 External trigger source 8. The actual source varies per device (for example, HET I/O channel, event pin).
		Ah	EXT9 External trigger source 9. The actual source varies per device (for example, HET I/O channel, event pin).
		Bh	EXT10 External trigger source 10. The actual source varies per device (for example, HET I/O channel, event pin).
		Ch	EXT11 External trigger source 11. The actual source varies per device (for example, HET I/O channel, event pin).
		Dh	EXT12 External trigger source 12. The actual source varies per device (for example, HET I/O channel, event pin).
		Eh	EXT13 External trigger source 13. The actual source varies per device (for example, HET I/O channel, event pin).
		Fh	TICK Internal periodic event trigger. The tick counter can initiate periodic group transfers.
15	Reserved	0	Reads return 0. Writes have no effect.
14-8	PSTARTx	0-7Fh	TG start address. PSTARTx stores the start address of the corresponding TG. The corresponding end address is inherently defined by the subsequent TG start address minus 1 (PENDx[TGx] = PSTARTx[TGx+1]-1). PSTARTx is copied into PCURRENTx when: • The TG is enabled • The end of the TG is reached during a transfer • A trigger event occurs while PRST is set to 1
7	Reserved	0	Reads return 0. Writes have no effect.
6-0	PCURRENTx	0-7Fh	Pointer to current buffer. PCURRENT is read-only. PCURRENTx stores the address (0...127) of the buffer that corresponds to this TG. If the TG switches from active-transfer mode to suspend-to-wait mode, PCURRENTx contains the address of the currently suspended word. After the TG resumes from suspend-to-wait mode, the next buffer will be transferred; that is, no buffer data is transferred because of suspend-to-wait mode.

Copyright © 2025 Texas Instruments Incorporated

Note

Register bits vary by device

TG0 has the highest priority and TG15 has the lowest priority. Under the following conditions, a lower-priority TG cannot be interrupted by a higher-priority TG:

1. When there is a CSHOLD or LOCK buffer, until the completion of the next buffer transfer that is a non-CSHOLD or non-LOCK buffer.
2. An entire sequence of words transferred for a NOBRK DMA buffer.
3. Once the last word in a TG is pre-fetched.

Copyright © 2025 Texas Instruments Incorporated

11.1.4.8.36 DMA Channel Control Register (DMAxCTRL)

Each DMA channel can be configured via one dedicated control register. The register description below shows one exemplary control register that is identical for all DMA channels; for example, the control register for DMA channel 0 is named DMA0CTRL. The MibSPI supports up to 8 bidirectional DMA channels.

The number of bidirectional DMA channels varies by device. The number of DMA channels and hence the number of DMA channel control registers may vary.

Figure 11-91. DMA Channel Control Register (DMAxCTRL) [offset = D8h-F4h]

31	30	24	23	20	19	16
ONESHOT	BUFID		RXDMA_MAP		TXDMA_MAP	
R/W-0	R/W-0		R/W-0		R/W-0	

15	14	13	12	8
RXDMAENA	TXDMAENA	NOBRK	ICOUNT	
R/W-0	R/W-0	R/W-0	R/W-0	

7	6	5	0
Reserved	COUNT_BIT17	COUNT	
R-0	R-0	R-0	

LEGEND: R/W = Read/Write; R = Read only; -*n* = value after reset

Table 11-223. DMA Channel Control Register (DMAxCTRL) Field Descriptions

Bit	Field	Value	Description
31	ONESHOT		Auto-disable of DMA channel after ICOUNT + 1 transfers. **Note: This ONESHOT applies to the DMA channel identified by x and will autodisable based on ICOUNTx.**
		0	The length of the block transfer is fully controlled by the DMA controller. The enable bits RXDMAENAx and TXDMAENAx are not modified by the MibSPI.
		1	ONESHOT allows a block transfer of defined length (ICOUNTx + 1), mainly controlled by the MibSPI and not by the DMA controller. After ICOUNTx + 1 transfers, the enable bits RXDMAENAx and TXDMAENAx are automatically cleared by the MibSPI, hence no more DMA requests are generated. In conjunction with NOBRKx, a burst transfer can be initiated without any other transfer through another buffer.
30-24	BUFIDx	0-7Fh	Buffer utilized for DMA transfer. BUFIDx defines the buffer that is utilized for the DMA transfer. In order to synchronize the transfer with the DMA controller with the NOBRK condition the "suspend to wait until..." modes must be used.
23-20	RXDMA_MAPx	0-Fh	Each MibSPI DMA channel can be linked to two physical DMA Request lines of the DMA controller. One request line for receive data and the other for request line for transmit data. RXDMA_MAPx defines the number of the physical DMA Request line that is connected to the receive path of the MibSPI DMA channel. If RXDMAENAx and TXDMAENAx are both set to 1, then RXDMA_MAPx shall differ from TXDMA_MAPx and shall differ from any other used physical DMA Request line. Otherwise, unexpected interference may occur.

Copyright © 2025 Texas Instruments Incorporated

Table 11-223. DMA Channel Control Register (DMAxCTRL) Field Descriptions (continued)

Bit	Field	Value	Description
19-16	TXDMA_MAPx	0-Fh	Each MibSPI DMA channel can be linked to two physical DMA Request lines of the DMA controller. One request line for receive data and the other for request line for transmit data. TXDMA_MAPx defines the number of the physical DMA Request line that is connected to the transmit path of the MibSPI DMA channel. If RXDMAENAx and TXDMAENAx are both set to 1, then TXDMA_MAPx shall differ from RXDMA_MAPx and shall differ from any other used physical DMA Request line. Otherwise, unexpected interference may occur.
15	RXDMAENAx		Receive data DMA channel enable.
		0	No DMA request upon new receive data.
		1	The physical DMA channel for the receive path is enabled. The first DMA request pulse is generated after the first transfer from the referenced buffer (BUFIDx) is finished. The buffer should be configured in as "skip until RXEMPTY is set" or "suspend to wait until RXEMPTY is set" in order to ensure synchronization between the DMA controller and the MibSPI sequencer.
14	TXDMAENAx		Transmit data DMA channel enable.
		0	No DMA request upon new transmit data.
		1	The physical DMA channel for the transmit path is enabled. The first DMA request pulse is generated right after setting TXDMAENAx to load the first transmit data. The buffer should be configured in the as "skip until TXFULL is set" or "suspend to wait until TXFULL is set" in order to ensure synchronization between the DMA controller and the MibSPI sequencer.
13	NOBRKx		Non-interleaved DMA block transfer. This bit is available in master mode only. **Note: Special Conditions during a NOBRK Buffer Transfer. If a NOBRK DMA buffer is currently being serviced by the sequencer, then it is not allowed to be disabled prematurely.** During a NOBRK transfer, the following operations are not allowed: • Clearing the NOBRKx bit to 0 • Clearing the RXDMAENAx to 0 (if it is already 1) • Clearing the TXDMAENAx to 0 (if it is already 1) • Clearing the BUFMODE[2:0] bits in TXRAM to 000 **Note: Any attempts to perform these actions during a NOBRK transfer will produce unpredictable results.**
		0	DMA transfers through the buffer referenced by BUFIDx are interleaved by data transfers from other active buffers or TGs. Every time the sequencer checks the DMA buffer, it performs one transfer and then steps to the next buffer.
		1	NOBRKx ensures that ICOUNTx + 1 data transfers are performed from the buffer referenced by BUFIDx without a data transfer from any other buffer. The sequencer remains at the DMA buffer until ICOUNTx + 1 transfers have been processed. For example, this can be used to generate a burst transfer to one device without disabling the chip select signal in-between (the concerned buffer has to be configured with CSHOLD = 1). Another example would be to have a defined block data transfer in slave mode, synchronous to the master SPI. **Note: Triggering of higher priority TGs or enabling of higher priority DMA channels will not interrupt a NOBRK block transfer.**
12-8	ICOUNTx	0-1Fh	Initial count of DMA transfers. ICOUNTx is used to preset the transfer counter COUNTx. Every time COUNTx hits 0, it is reloaded with ICOUNTx. The real number of transfers equals ICOUNTx plus 1. If ONESHOTx is set, ICOUNTx defines the number of DMA transfers that are performed before the MibSPI automatically disables the DMA channels. If NOBRKx is set, ICOUNTx defines the number of DMA transfers that are performed in one sequence without a transfer from any other buffer. If ONESHOTx and NOBRKx are not set, ICOUNTx should be 0. **Note: See Section 11.1.4.8.37 (ICOUNT) and Section 11.1.4.8.38 (DMACNTLEN) about how to increase the ICOUNT to a 16-bit value. With this extended capability, MibSPI can transfer a block of up to 65535 (65K) words without interleaving (if NOBRK is used) or without deasserting the chip select between the buffers (if CSHOLD is used).**
7	Reserved	0	Reads return 0. Writes have no effect.
6	COUNT_BIT17x		The 17th bit of the COUNT field of DMAxCOUNT register.

Copyright © 2025 Texas Instruments Incorporated

Table 11-223. DMA Channel Control Register (DMAxCTRL) Field Descriptions (continued)

Bit	Field	Value	Description
5-0	COUNTx	0-3Fh	Actual number of remaining DMA transfers. This field contains the actual number of DMA transfers that remain, until the DMA channel is disabled, if ONESHOTx is set. **Note: If the TX and RX DMA requests are enabled, the COUNT register will be decremented when the RX has been serviced.**

Copyright © 2025 Texas Instruments Incorporated

11.1.4.8.37 DMAxCOUNT Register (ICOUNT)

Note

These registers are used only if the LARGE COUNT bit in the DMACNTLEN register is set.

The number of bidirectional DMA channels varies by device. The number of DMA channels and hence the number of DMA registers varies by device.

Figure 11-92. DMAxCOUNT Register (ICOUNT) [offset = F8h-114h]

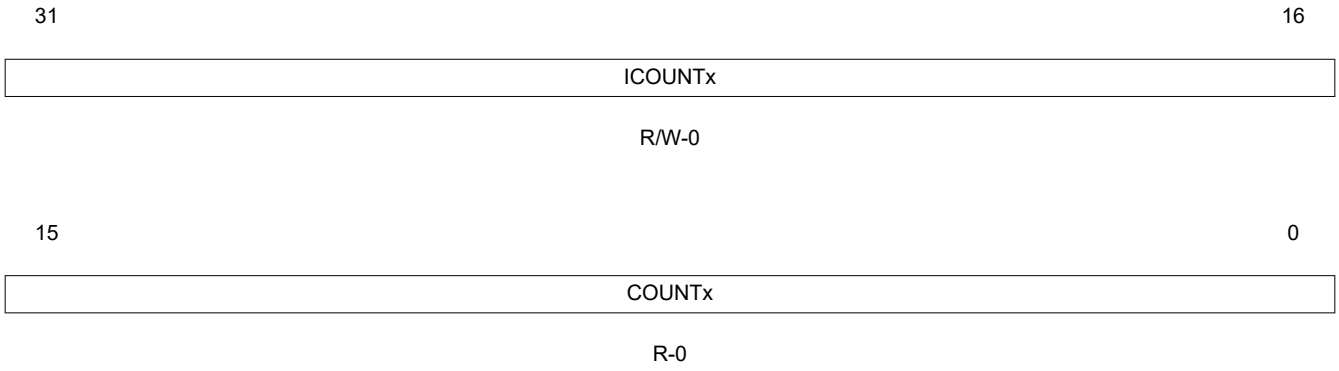

LEGEND: R/W = Read/Write; R = Read only; *-n* = value after reset

Table 11-224. MibSPI DMAxCOUNT Register (ICOUNT) Field Descriptions

Bit	Field	Value	Description
31-16	ICOUNTx	0-FFFFh	Initial number of DMA transfers. ICOUNTx is used to preset the transfer counter COUNTx. Every time COUNTx hits 0, it is reloaded with ICOUNTx. The real number of transfer equals ICOUNTx plus 1. If ONESHOTx is set, ICOUNTx defines the number of DMA transfers that are performed before the MibSPI automatically disables the corresponding DMA channel. If NOBRKx is set, ICOUNTx defines the number of DMA transfers that are performed in one sequence without a transfer from any other buffer.
15-0	COUNTx	0-FFFFh	Actual number of remaining DMA transfers. COUNTx Contains the actual number of DMA transfers that remain, until the DMA channel is disabled, if ONESHOTx is set. Since the real counter value is always ICOUNTx +1, the 17th bit of COUNTx is available on DMACTRLx[6] bit. **Note: Usage Tip for Block Transfer Using a Single DMA Request. It is possible to use the multi-buffer RAM to transfer chunks of data to/from an external SPI. A DMA Controller can be used to handle the data in bursts. Suppose a chunk of 64 bytes of data needs to be transferred and a single DMA request needs to be generated at the end of transferring the 64 bytes. This can be easily achieved by configuring a TG register for the 64 buffer locations and using the DMAxCTRL/DMAxCOUNT registers to configure the last buffer (64th) of the TG as the BUFID and enable RXDMA (NOBRK = 0). At the end of the transfer of the 64th buffer, a DMA request will be generated on the selected DMA request channel. The DMA controller can do a burst read of all 64 bytes from RXRAM and/or then do a burst write to all 64 bytes to the TXRAM for the next chunk.**

Copyright © 2025 Texas Instruments Incorporated

11.1.4.8.38 DMA Large Count (DMACNTLEN)

Figure 11-93. DMA Large Count Register (DMACNTLEN) [offset = 118h]

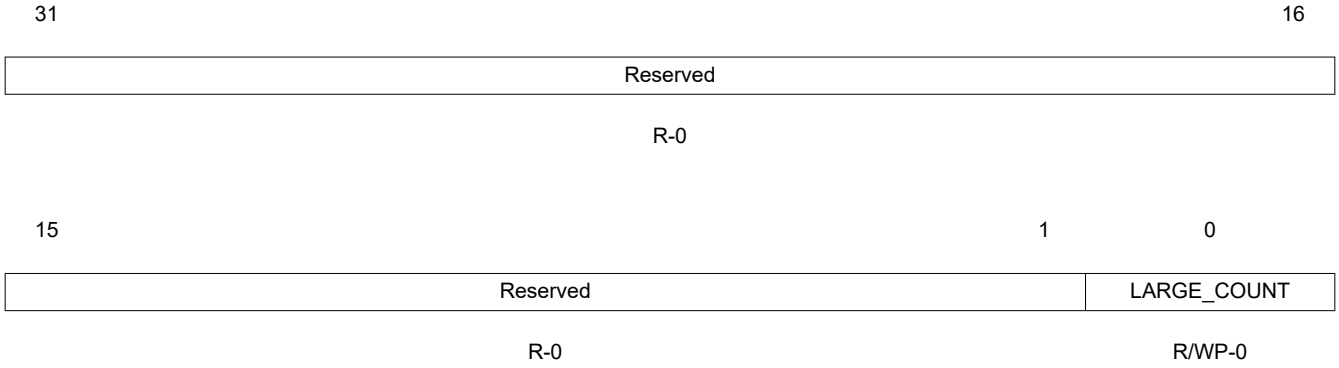

LEGEND: R/W = Read/Write; R = Read only; WP = Write in privilege mode only; -*n* = value after reset

Table 11-225. MibSPI DMA Large Count Register (DMACNTLEN) Field Descriptions

Bit	Field	Value	Description
31-1	Reserved	0	Reads return 0. Writes have no effect.
0	LARGE_COUNT		Select either the 16-bit DMAxCOUNT counters or the smaller counters in DMAxCTRL.
		0	Select the DMAxCTRL counters. Writes to the DMAxCTRL register will modify the ICOUNT value. Reading ICOUNT and COUNT can be done from the DMAxCTRL register. The DMAxCOUNT register should not be used since any write to this register will be overwritten by a subsequent write to the DMAxCTRL register to set the TXDMAENA or RXDMAENA bits.
		1	Select the DMAxCOUNT counters. Writes to the DMAxCTRL register will not modify the ICOUNT value. The ICOUNT value must be written to in the DMAxCOUNT register before the RXDMAENA or TXDMAENA bits are set in the DMAxCTRL register. The DMAxCOUNT register should be used for reading COUNT or ICOUNT.

11.1.4.8.39 Multi-buffer RAM Uncorrectable Parity Error Control Register (UERRCTRL)

Figure 11-94. Multi-buffer RAM Uncorrectable Parity Error Control Register (UERRCTRL) [offset = 120h]

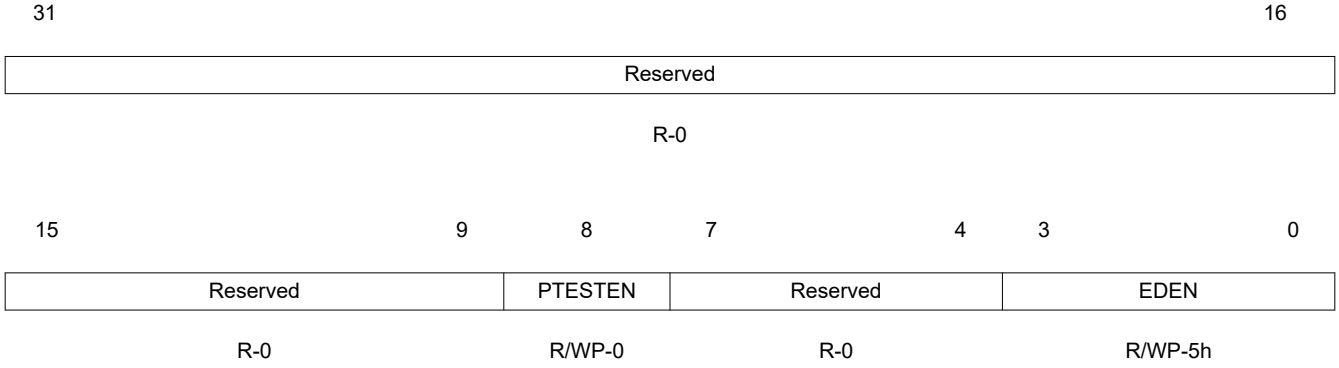

LEGEND: R/W = Read/Write; R = Read only; WP = Write in privilege mode only; -*n* = value after reset

Table 11-226. Multi-buffer RAM Uncorrectable Parity Error Control Register (UERRCTRL) Field Descriptions

Bit	Field	Value	Description
31-9	Reserved	0	Reads return 0. Writes have no effect.

Copyright © 2025 Texas Instruments Incorporated

Table 11-226. Multi-buffer RAM Uncorrectable Parity Error Control Register (UERRCTRL) Field Descriptions (continued)

Bit	Field	Value	Description
8	PTESTEN		Parity memory test enable. This bit maps the parity bits corresponding to multi-buffer RAM locations into the peripheral RAM frame to make them accessible by the CPU. See Section 11.1.4.10 for further details about parity memory testing.
		0	Parity bits are not memory-mapped.
		1	Parity bits are memory-mapped.
7-4	Reserved	0	Reads return 0. Writes have no effect.
3-0	EDEN		Error detection enable. These bits enable parity error detection.
		5h	Parity error detection logic (default) is disabled.
		All Other Values	Parity error detection logic is enabled.
			Note: It is recommended to write a 1010 to enable error detection, to guard against a soft error from disabling parity error detect

Copyright © 2025 Texas Instruments Incorporated

11.1.4.8.40 Multi-buffer RAM Uncorrectable Parity Error Status Register (UERRSTAT)

Figure 11-95. Multi-buffer RAM Uncorrectable Parity Error Status Register (UERRSTAT) [offset = 124h]

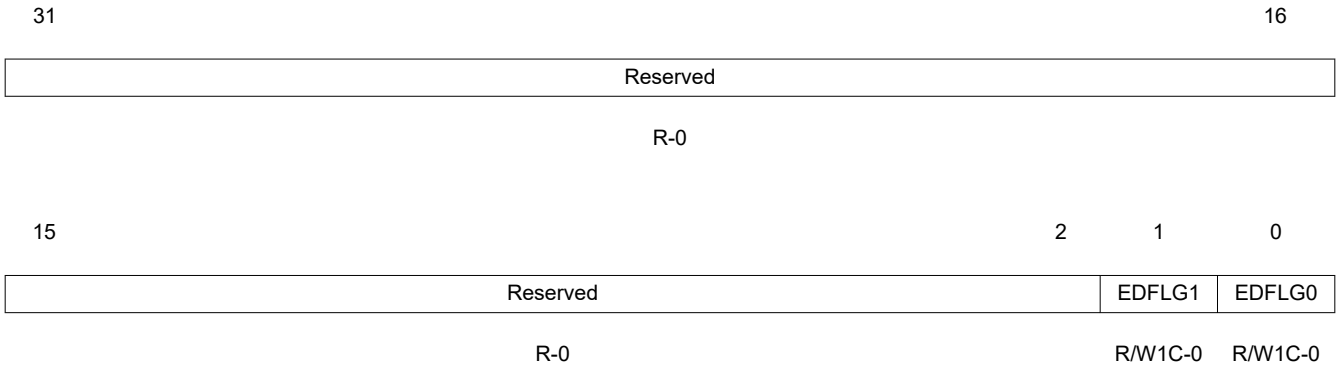

LEGEND: R/W = Read/Write; R = Read only; W1C = Write 1 to clear; -*n* = value after reset

Table 11-227. Multi-buffer RAM Uncorrectable Parity Error Status Register (UERRSTAT) Field Descriptions

Bit	Field	Value	Description
31-2	Reserved	0	Reads return 0. Writes have no effect.
1	EDFLG1		Uncorrectable parity error detection flag. This flag indicates if a parity error occurred in the RXRAM. **Note: Reading the UERRADDR1 register clears the EDFLG1 bit.**
		0	Read: No error has occurred. Write: Writing a 0 to this bit has no effect.
		1	Read: An error was detected and the address is captured in the UERRADDR1 register. Write: The bit is cleared to 0.
0	EDFLG0		Uncorrectable parity error detection flag. This flag indicates if a parity error occurred in the TXRAM. **Note: Reading the UERRADDR0 register clears the EDFLG0 bit.**
		0	Read: No error has occurred. Write: Writing a 0 to this bit has no effect.
		1	Read: An error was detected and the address is captured in the UERRADDR0 register. Write: The bit is cleared to 0.

Copyright © 2025 Texas Instruments Incorporated

11.1.4.8.41 RXRAM Uncorrectable Parity Error Address Register (UERRADDR1)

Figure 11-96. RXRAM Uncorrectable Parity Error Address Register (UERRADDR1) [offset = 128h]

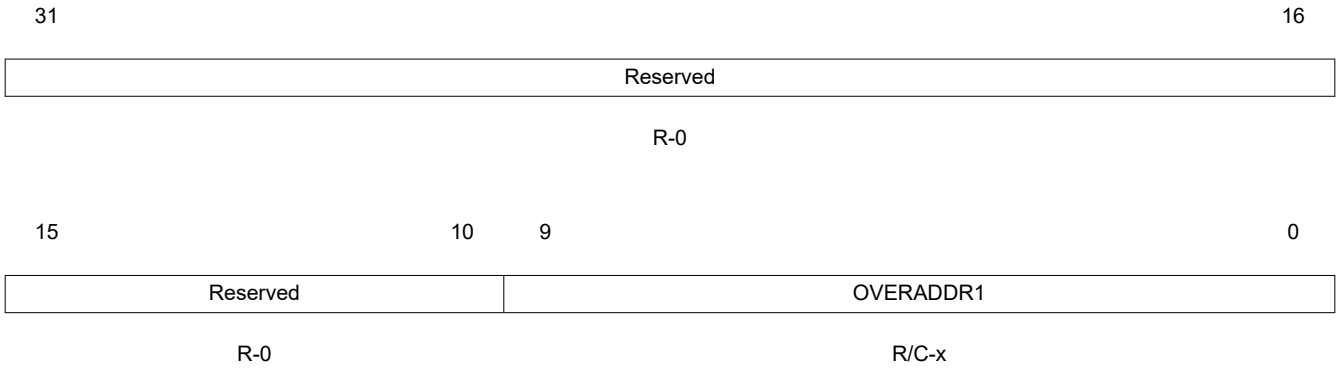

LEGEND: R = Read only; C = Clear; -*n* = value after reset

Table 11-228. RXRAM Uncorrectable Parity Error Address Register (UERRADDR1) Field Descriptions

Bit	Field	Value	Description
31-10	Reserved	0	Reads return 0. Writes have no effect.
9-0	OVERADDR1	200h-3FFh	Uncorrectable parity error address for RXRAM. This register holds the address where a parity error is generated while reading RXRAM. Only the CPU or DMA can read from RXRAM locations. The address captured is byte-aligned. This error address is frozen from being updated until it is read by the CPU. The offset address of RXRAM varies from 200h-3FFh. The register does not clear its contents during or after module-level reset, system-level reset or even power-on reset. A read operation to this register clears its contents to the default value 200h. After a power-on reset the contents will be unpredictable. A read operation can be performed after power-up to keep the register at its default value, if required. However, the contents of this register are meaningful only when EDFLG1 is set to 1. **Note: A read of the UERRADDR1 register will clear EDFLG1 in the UERRSTAT register. However, in emulation mode when the SUSPEND signal is high, a read from the UERRADDR1 register does not clear EDFLG1.**

Copyright © 2025 Texas Instruments Incorporated

11.1.4.8.42 TXRAM Uncorrectable Parity Error Address Register (UERRADDR0)

Figure 11-97. TXRAM Uncorrectable Parity Error Address Register (UERRADDR0) [offset = 12Ch]

31	16
Reserved	
R-0	

15	9	8	0
Reserved		UERRADDR0	
R-0		R/C-x	

LEGEND: R = Read only; C = Clear; -*n* = value after reset

Table 11-229. TXRAM Uncorrectable Parity Error Address Register (UERRADDR0) Field Descriptions

Bit	Field	Value	Description
31-9	Reserved	0	Reads return 0. Writes have no effect.
8-0	UERRADDR0	0-1FFh	Uncorrectable parity error address for TXRAM. This register holds the address where a parity error is generated while reading from TXRAM. The TXRAM can be read either by CPU or by the MibSPI sequencer logic for transmission. The address captured is byte-aligned. This error address is frozen from being updated until it is read by the CPU. The offset address of TXRAM varies from 0-1FFh. The register does not clear its contents during or after module-level reset, system-level reset, or even power-on reset. A read operation to this register clears its contents to all 0s. After a power-on reset, the contents of this register will be unpredictable. A read operation can be performed after power-up to clear the this register's contents, if required. However, the contents of this register are meaningful only when EDFLG0 is set to 1. **Note: A read from the UERRADDR0 register will clear EDFLG0 in the UERRSTAT register. However, in emulation mode when the SUSPEND signal is high, a read from the UERRADDR0 register does not clear EDFLG0.**

Copyright © 2025 Texas Instruments Incorporated

11.1.4.8.43 RXRAM Overrun Buffer Address Register (RXOVRN_BUF_ADDR)

In multi-buffer mode, if a particular RXRAM location is written by the MibSPI sequencer logic after the completion of a new transfer when that location already contains valid data, the RX_OVR bit will be set to 1 while the data is being written. The RXOVRN_BUF_ADDR register captures the address of the RXRAM location for which a receiver overrun condition occurred.

Figure 11-98. RXRAM Overrun Buffer Address Register (RXOVRN_BUF_ADDR) [offset = 130h]

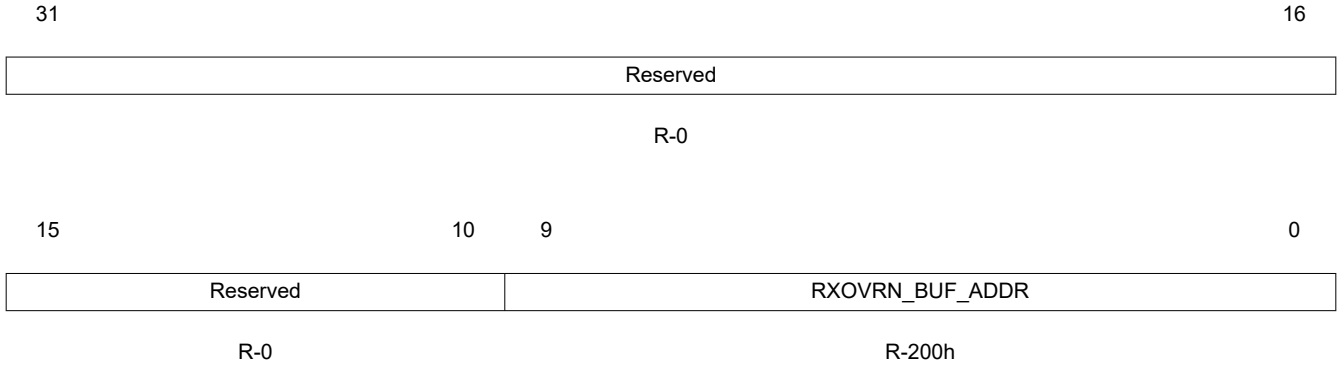

LEGEND: R = Read only; -*n* = value after reset

Table 11-230. RXRAM Overrun Buffer Address Register (RXOVRN_BUF_ADDR) Field Descriptions

Bit	Field	Value	Description
31-10	Reserved	0	Reads return 0. Writes have no effect.
9-0	RXOVRN_BUF_ADDR	200h-3FCh	Address in RXRAM at which an overwrite occurred. This address value will show only the offset address of the RAM location in the multi-buffer RAM address space. Refer to the device-specific data sheet for the actual absolute address of RXRAM. This word-aligned address can vary from 200h-3FCh. Contents of this register are valid only when any of the INTVECT0 or INTVECT1 and SPIFLG registers show an RXOVRN error vector while in multi-buffer mode. If there are multiple overrun errors, then this register holds the address of first overrun address until it is read. **Note: Reading this register clears the RXOVRN interrupt flag in the SPIFLG register and the TGINTVECTx.** **Note: Receiver overrun errors in multi-buffer mode can be completely avoided by using the SUSPEND until RXEMPTY feature, which can be programmed into each buffer of any TG. However, using the SUSPEND until RXEMPTY feature will make the sequencer wait until the current RXRAM location is read by the VBUS master before it can start the transfer for the same buffer location again. This may affect the overall throughput of the SPI transfer. By enabling the interrupt on RXOVRN in multi-buffer mode, the user can rely on interrupts to know if a receiver overrun has occurred. The address of the overrun in RXRAM is indicated in this RXOVRN_BUF_ADDR register.**

Copyright © 2025 Texas Instruments Incorporated

11.1.4.8.44 I/O-Loopback Test Control Register (IOLPBKTSTCR)

This register controls test mode for I/O pins. It also controls whether loop-back should be digital or analog. In addition, it contains control bits to induce error conditions into the module. These are to be used only for module testing.

All of the control/status bits in this register are valid only when the IOLPBKTSTENA field is set to Ah.

Figure 11-99. I/O-Loopback Test Control Register (IOLPBKTSTCR) [offset = 134h]

31	25	24
Reserved		SCS_FAIL_FLG
R-0		R/W1C-0

23	21	20	19	18	17	16
Reserved		CTRL_BITERR	CTRL_DESYNC	CTRL_PARERR	CTRL_TIMEOUT	CTRL_DLENERR
R-0		R/WP-0	R/WP-0	R/WP-0	R/WP-0	R/WP-0

15	12	11	8
Reserved		IOLPBKTSTENA	
R-0		R/WP-0	

7	6	5	3	2	1	0
Reserved		ERR_SCS_PIN		CTRL_SCS_PIN_ERR	LPBKTYPE	RXPENA
R-0		R/WP-0		R/WP-0	R/WP-0	R/WP-0

LEGEND: R/W = Read/Write; R = Read only; W1C = Write 1 to clear; WP = Write in privilege mode only; *-n* = value after reset

Table 11-231. I/O-Loopback Test Control Register (IOLPBKTSTCR) Field Descriptions

Bit	Field	Value	Description
31-25	Reserved	0	Reads return 0. Writes have no effect.
24	SCS FAIL FLG		Bit indicating a failure on $\overline{\text{SPICS}}$ pin compare during analog loopback.
		0	Read: No miscompares occurred on any of the eight chip select pins (vs. the internal chip select number CSNR during transfers). Write: Writing a 0 to this bit has no effect.
		1	Read: A comparison between the internal CSNR field and the analog looped-back value of one or more of the $\overline{\text{SPICS}}$ pins failed. A stuck-at fault is detected on one of the $\overline{\text{SPICS}}$ pins. Comparison is done only on the pins that are configured as functional and during transfer operation. Write: This flag bit is cleared.
23-21	Reserved	0	Reads return 0. Writes have no effect.
20	CTRL BITERR		Controls inducing of BITERR during I/O loopback test mode.
		0	Do not interfere with looped-back data.
		1	Induces bit errors by inverting the value of the incoming data during loopback.

Copyright © 2025 Texas Instruments Incorporated

Table 11-231. I/O-Loopback Test Control Register (IOLPBKTSTCR) Field Descriptions (continued)

Bit	Field	Value	Description
19	CTRL DESYNC		Controls inducing of the desync error during I/O loopback test mode.
		0	Do not cause a desync error.
		1	Induce a desync error by forcing the incoming $\overline{\text{SPIENA}}$ pin (if functional) to remain 0 even after the transfer is complete. This forcing will be retained until the kernel reaches the idle state.
18	CTRL PARERR		Controls inducing of the parity errors during I/O loopback test mode.
		0	Do not cause a parity error.
		1	Induce a parity error by inverting the polarity of the parity bit.
17	CTRL TIMEOUT		Controls inducing of the timeout error during I/O loopback test mode.
		0	Do not cause a timeout error.
		1	Induce a timeout error by forcing the incoming $\overline{\text{SPIENA}}$ pin (if functional) to remain 1 when transmission is initiated. The forcing will be retained until the kernel reaches the idle state.
16	CTRL DLENERR		Controls inducing of the data length error during I/O loopback test mode.
		0	Do not cause a data-length error.
		1	Induce a data-length error.
			Master mode: The $\overline{\text{SPIENA}}$ pin (if functional) is forced to 1 when the module starts shifting data.
			Slave mode: The incoming $\overline{\text{SPICS}}$ pin (if functional) is forced to 1 when the module starts shifting data.
15-12	Reserved	0	Reads return 0. Writes have no effect.
11-8	IOLPBKSTENA		Module I/O loopback test enable key.
		Ah	Enable I/O loopback test mode.
		All Other Values	Disable I/O loopback test mode.
7-6	Reserved	0	Reads return 0. Writes have no effect.
5-3	ERR SCS PIN		Inject error on chip-select pin number x. The value in this field is decoded as the number of the chip select pin on which to inject an error. During analog loopback, if CTRL SCS PIN ERR bit is set to 1, then the chip select pin selected by this field is forced to the opposite of its value in the CSNR.
		0	Select $\overline{\text{SPICS}}$[0] for injecting error.
		1h	Select $\overline{\text{SPICS}}$[1] for injecting error.
		:	:
		7h	Select $\overline{\text{SPICS}}$[7] for injecting error.
2	CTRL SCS PIN ERR		Enable/disable the injection of an error on the $\overline{\text{SPICS}}$ pins. The individual $\overline{\text{SPICS}}$ pins can be chosen using the ERR SCS PIN field.
		0	Disable the $\overline{\text{SPICS}}$ error-inducing logic.
		1	Enable the $\overline{\text{SPICS}}$ error-inducing logic.
1	LPBK TYPE		Module I/O loopback type (analog/digital). See Figure 11-48 for the different types of loopback modes.
		0	Enable Digital loopback when IOLPBKTSTENA = 1010.
		1	Enable Analog loopback when IOLPBKTSTENA = 1010.
0	RXPENA		Enable analog loopback through the receive pin.
			Note: This bit is valid only when LPBK TYPE = 1, which chooses analog loopback mode.
		0	Analog loopback is through the transmit pin.
		1	Analog loopback is through the receive pin.

Copyright © 2025 Texas Instruments Incorporated

11.1.4.8.45 SPI Extended Prescale Register 1 (EXTENDED_PRESCALE1 for SPIFMT0 and SPIFMT1)

This register provides an extended Prescale values for SPICLK generation to be able to interface with much slower SPI Slaves. This is an extension of SPIFMT0 and SPIFMT1 registers. For example, EPRESCALE_FMT1[7:0] of EXTENDED_PRESCALE1 and PRESCALE1 of SPIFMT1 register will always reflect the same contents. Similarly, EPRESCALE_FMT0[7:0] and PRESCALE0 of SPIFMT0 reflect the same contents.

Figure 11-100. SPI Extended Prescale Register 1 (EXTENDED_PRESCALE1 for SPIFMT0 and SPIFMT1) [offset = 138h]

31	27	26	16
Reserved		EPRESCALE_FMT1	
R-0		R/WP-0	

15	11	10	0
Reserved		EPRESCALE_FMT0	
R-0		R/WP-0	

LEGEND: R/W = Read/Write; R = Read only; WP = Write in privilege mode only; -*n* = value after reset

Table 11-232. SPI Extended Prescale Register 1 (EXTENDED_PRESCALE1) Field Descriptions

Bit	Field	Value	Description
31-27	Reserved	0	Reads return 0. Writes have no effect.
26-16	EPRESCALE_FMT1	0-7FFh	EPRESCALE_FMT1. Extended Prescale value for SPIFMT1. EPRESCALE_FMT1 determines the bit transfer rate of data format 1 if the SPI/MibSPI is the network master. EPRESCALE_FMT1 is use to derive SPICLK from VCLK. If the SPI is configured as slave, EPRESCALE_FMT1 **does not need** to be configured. These EPRESCALE_FMT1[7:0] bits and PRESCALE1 bits of SPIFMT1 register will point to the same physically implemented register. The clock rate for data format 1 can be calculated as: $BR_{Format1}$ = VCLK / (EPRESCALE_FMT1 + 1) Write: This register field should be written if a SPICLK prescaler of more VCLK/256 is required. This field provides a prescaler of up to VCLK/2048 for SPICLK. Writing to this register field will also get reflected in the PRESCALE1 bits of SPIFMT1 register. Read: Reading this field will reflect the PRESCALE value based on the last written register field, that is, EXTENDED_PRESCALE1[26:16] or SPIFMT1[15:8] register. **Note: If Extended Prescaler is required, it should be ensured that EXTENDED_PRESCALE1 register is programmed after SPIFMT1 register is programmed. This is to ensure that the final SPICLK prescale value is controlled by EXTENDED_PRESCALE1 register when a prescale of more 256 is intended on SPICLK. Writing to PRESCALE1 field of SPIFMT1 will automatically clear EPRESCALE_FMT1[10:8] bits to 000 so that the integrity of PRESCALE value is maintained.**
15-11	Reserved	0	Reads return 0. Writes have no effect.

Copyright © 2025 Texas Instruments Incorporated

Table 11-232. SPI Extended Prescale Register 1 (EXTENDED_PRESCALE1) Field Descriptions (continued)

Bit	Field	Value	Description
10-0	EPRESCALE_FMT0	0-7FFh	EPRESCALE_FMT0. Extended Prescale value for SPIFMT0. EPRESCALE_FMT0 determines the bit transfer rate of data format 0 if the SPI/MibSPI is the network master. EPRESCALE_FMT0 is use to derive SPICLK from VCLK. If the SPI is configured as slave, EPRESCALE_FMT0 **does not need** to be configured. These EPRESCALE_FMT0[7:0] bits and PRESCALE0 bits of SPIFMT0 register will point to the same physically implemented register. The clock rate for data format 0 can be calculated as: $BR_{Format0}$ = VCLK / (EPRESCALE_FMT0 + 1) Write: This register field should be written if a SPICLK prescaler of more VCLK/256 is required. This field provides a prescaler of up to VCLK/2048 for SPICLK. Writing to this register field will also get reflected in the PRESCALE0 bits of SPIFMT0 register. Read: Reading this field will reflect the PRESCALE value based on the last written register field, that is, EXTENDED_PRESCALE0[10:0] or SPIFMT0[15:8] register. **Note: If Extended Prescaler is required, it should be ensured that EXTENDED_PRESCALE1 register is programmed after SPIFMT0 register is programmed. This is to ensure that the final SPICLK prescale value is controlled by EXTENDED_PRESCALE1 register when a prescale of more 256 is intended on SPICLK. Writing to PRESCALE0 field of SPIFMT0 will automatically clear EPRESCALE_FMT0[10:8] bits to 000 so that the integrity of PRESCALE value is maintained.**

Copyright © 2025 Texas Instruments Incorporated

11.1.4.8.46 SPI Extended Prescale Register 2 (EXTENDED_PRESCALE2 for SPIFMT2 and SPIFMT3)

This register provides an extended Prescale values for SPICLK generation to be able to interface with much slower SPI Slaves. This is an extension of SPIFMT2 and SPIFMT3 registers. For example, EPRESCALE_FMT3[7:0] of EXTENDED_PRESCALE2 and PRESCALE3 of SPIFMT3 register will always reflect the same contents. Similarly, EPRESCALE_FMT2[7:0] and PRESCALE2 of SPIFMT2 reflect the same contents.

Figure 11-101. SPI Extended Prescale Register 2 (EXTENDED_PRESCALE2 for SPIFMT2 and SPIFMT3) [offset = 13Ch]

31	27	26	16
Reserved		EPRESCALE_FMT3	
R-0		R/WP-0	

15	11	10	0
Reserved		EPRESCALE_FMT2	
R-0		R/WP-0	

LEGEND: R/W = Read/Write; R = Read only; WP = Write in privilege mode only; -*n* = value after reset

Table 11-233. SPI Extended Prescale Register 2 (EXTENDED_PRESCALE2) Field Descriptions

Bit	Field	Value	Description
31-27	Reserved	0	Reads return 0. Writes have no effect.
26-16	EPRESCALE_FMT3	0-7FFh	EPRESCALE_FMT3. Extended Prescale value for SPIFMT3. EPRESCALE_FMT3 determines the bit transfer rate of data format 3 if the SPI/MibSPI is the network master. EPRESCALE_FMT3 is use to derive SPICLK from VCLK. If the SPI is configured as slave, EPRESCALE_FMT3 **does not need** to be configured. These EPRESCALE_FMT3[7:0] bits and PRESCALE3 bits of SPIFMT3 register will point to the same physically implemented register. The clock rate for data format 1 can be calculated as: $BR_{Format3}$ = VCLK / (EPRESCALE_FMT3 + 1) Write: This register field should be written if a SPICLK prescaler of more VCLK/256 is required. This field provides a prescaler of up to VCLK/2048 for SPICLK. Writing to this register field will also get reflected in the PRESCALE3 bits of SPIFMT3 register. Read: Reading this field will reflect the PRESCALE value based on the last written register field, that is, EXTENDED_PRESCALE3[26:16] or SPIFMT3[15:8] register. **Note: If Extended Prescaler is required, it should be ensured that EXTENDED_PRESCALE2 register is programmed after SPIFMT3 register is programmed. This is to ensure that the final SPICLK prescale value is controlled by EXTENDED_PRESCALE2 register when a prescale of more 256 is intended on SPICLK. Writing to PRESCALE3 field of SPIFMT3 will automatically clear EPRESCALE_FMT3[10:8] bits to 000 so that the integrity of PRESCALE value is maintained.**
15-11	Reserved	0	Reads return 0. Writes have no effect.

Copyright © 2025 Texas Instruments Incorporated

Table 11-233. SPI Extended Prescale Register 2 (EXTENDED_PRESCALE2) Field Descriptions (continued)

Bit	Field	Value	Description
10-0	EPRESCALE_FMT2	0-7FFh	EPRESCALE_FMT2. Extended Prescale value for SPIFMT2. EPRESCALE_FMT2 determines the bit transfer rate of data format 2 if the SPI/MibSPI is the network master. EPRESCALE_FMT2 is use to derive SPICLK from VCLK. If the SPI is configured as slave, EPRESCALE_FMT2 **does not need** to be configured. These EPRESCALE_FMT2[7:0] bits and PRESCALE2 bits of SPIFMT2 register will point to the same physically implemented register. The clock rate for data format 0 can be calculated as: $BR_{Format2}$ = VCLK / (EPRESCALE_FMT2 + 1) Write: This register field should be written if a SPICLK prescaler of more VCLK/256 is required. This field provides a prescaler of up to VCLK/2048 for SPICLK. Writing to this register field will also get reflected in the PRESCALE2 bits of SPIFMT2 register. Read: Reading this field will reflect the PRESCALE value based on the last written register field, that is, EXTENDED_PRESCALE2[10:0] or SPIFMT2[15:8] register. **Note: If Extended Prescaler is required, it should be ensured that EXTENDED_PRESCALE2 register is programmed after SPIFMT2 register is programmed. This is to ensure that the final SPICLK prescale value is controlled by EXTENDED_PRESCALE2 register when a prescale of more 256 is intended on SPICLK. Writing to PRESCALE2 field of SPIFMT2 will automatically clear EPRESCALE_FMT2[10:8] bits to 000 so that the integrity of PRESCALE value is maintained.**

Copyright © 2025 Texas Instruments Incorporated

11.1.4.9 Multi-Buffer RAM

The multi-buffer RAM is used for holding transmit and received data, control and status information. The multi-buffer RAM contains two banks of up to 128 32-bit words for a maximum configuration. One bank (TXRAM) contains entries for transmit data (replicating the SPIDAT1 register). The other bank (RXRAM) contains received data (replicating the SPIBUF register). The buffers can be partitioned into multiple TGs, each containing a programmable number of buffers. Each of the buffers can be subdivided into 16-bit transmit field, 16-bit receive field, 16-bit control field, and 16-bit status field, as displayed in Figure 11-102. A 4-bit parity field per word is also included in each bank of RAM.

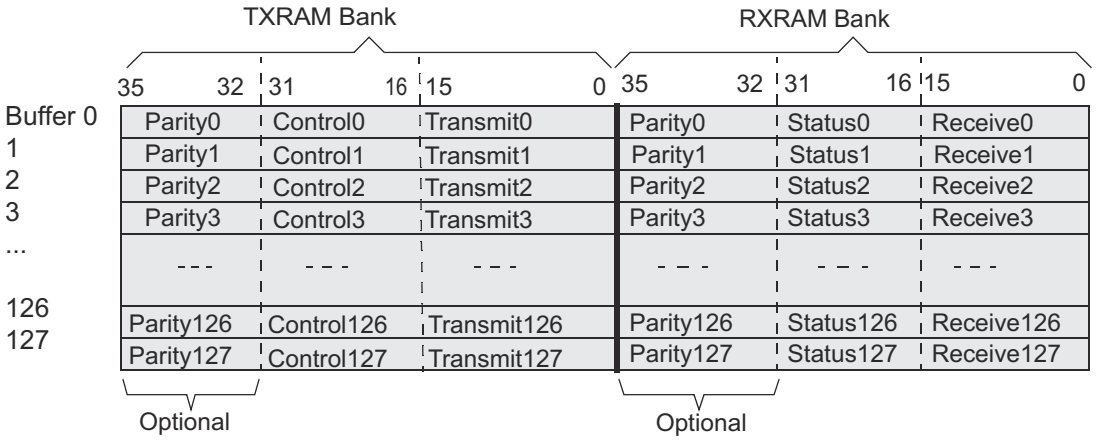

Figure 11-102. Multi-Buffer RAM Configuration

All fields can be read and written with 8-bit, 16-bit, or 32-bit accesses.

The transmit fields can be written and read in the address range 000h to 1FFh. The transmit words contain data and control fields.

The receive RAM fields are read-only and can be accessed through the address range 200h to 3FCh. The receive words contain data and status fields.

The chip select number (CSNR) bit field of the control field for a given word is mirrored into the corresponding receive-buffer status field after transmission.

The Parity is automatically calculated and copied to Parity location

Note

Please refer to the specific device datasheet for the actual number of transmit and receive buffers.

Write to unimplemented buffer is overwriting the corresponding implemented buffer. In MIBSPI, if the RAM SIZE specified is 32 buffers, write to 33rd buffer overwrites 1st buffer, write to 34th buffer overwrites 2st buffer and so on.

Copyright © 2025 Texas Instruments Incorporated

11.1.4.9.1 Multi-Buffer RAM Auto Initialization

When the MIBSPI is out of reset mode, auto initialization of multi-buffer RAM starts. The application code must check for BUFINITACTIVE bit to be 0 (Multi-buffer RAM initialization is complete) before configuring multi-buffer RAM.

Besides the default auto initialization after reset, the auto-initialization sequence can also be done by:

1. Enable the global hardware memory initialization key by programming a value of 1010b to the bits [3:0] of the MINITGCR register of the System module.
2. Set the control bit for the multi-buffer RAM in the MSINENA System module register. This bit is device-specific for each memory that support auto-initialization. Please refer to the device datasheet to identify the control bit for the multi-buffer RAM. This starts the initialization process. The BUFINITACTIVE bit will get set to reflect that the initialization is ongoing.
3. When the memory initialization is completed, the corresponding status bit in the MINISTAT register will be set. Also, the BUFINITACTIVE bit will get cleared.
4. Disable the global hardware memory initialization key by programming a value of 0101 to the bits [3:0] of the MINITGCR register of the System module.

Please refer to the *Architecture* chapter for more details on the memory auto-initialization process.

Note

During Auto Initialization process, all the Multi-buffer mode registers (except MIBSPIE) will be reset to their default values. So, it should be ensured that Auto Initialization is completed before configuring the Multi-buffer mode registers.

11.1.4.9.2 Multi-Buffer RAM Register Summary

This section describes the multi-buffer RAM control and transmit-data fields of each word of TXRAM, and the status and receive-data fields of each word of RXRAM. The base address for multi-buffer RAM is FF0E 0000h for MibSPI1 RAM, FF0C 000h for MibSPI3 RAM, and FF0A 0000h for MibSPI5 RAM.

Table 11-234. Multi-Buffer RAM Register Summary

Offset	Acronym	Register Description	Section
Base + 0h-1FFh	TXRAM	Multi-Buffer RAM Transmit Data Register	Section 11.1.4.9.3
Base + 200h-3FFh	RXRAM	Multi-Buffer RAM Receive Buffer Register	Section 11.1.4.9.4

Copyright © 2025 Texas Instruments Incorporated

11.1.4.9.3 Multi-Buffer RAM Transmit Data Register (TXRAM)

Each word of TXRAM is a transmit-buffer register.

Note

Writing to only the control fields, bits 28 through 16, does not initiate any SPI transfer in master mode. This feature can be used to set up SPICLK phase or polarity before actually starting the transfer by only updating the DFSEL bit field to select the required phase and polarity combination.

Figure 11-103. Multi-Buffer RAM Transmit Data Register (TXRAM) [offset = RAM Base + 0h-1FFh]

31 29	28	27	26	25 24	23 16
BUFMODE	CSHOLD	LOCK	WDEL	DFSEL	CSNR
R/W-0	R/W-0	R/W-0	R/W-0	R/W-0	R/W-0

15 0
TXDATA
R/W-0

LEGEND: R/W = Read/Write; *-n* = value after reset

Table 11-235. Multi-Buffer RAM Transmit Data Register (TXRAM) Field Descriptions

Bit	Field	Value	Description
31-29	BUFMODE		Specify conditions that are recognized by the sequencer to initiate transfers of each buffer word. When one of the "skip" modes is selected, the sequencer checks the buffer status every time it reads from this buffer. If the current buffer status (TXFULL, RXEMPTY) does not match, the buffer is skipped without a data transfer. When one of the "suspend" modes is selected, the sequencer checks the buffer status when it reads from this buffer. If TXFULL and/or RXEMPTY do not match, the sequencer waits until a match occurs. No data transfer is initiated until the status condition of this buffer changes.
		0	**disabled.** The buffer is disabled.
		1h	**skip single-transfer mode.** Skip this buffer until the corresponding TXFULL flag is set (new transmit data is available).
		2h	**skip overwrite-protect mode.** Skip this buffer until the corresponding RXEMPTY flag is set (new receive data can be stored in RXDATA without data loss).
		3h	**skip single-transfer overwrite-protect mode**. Skip this buffer until both of the corresponding TXFULL and RXEMPTY flags are set. (new transmit data available and previous data received by the host).
		4h	**continuous mode.** Initiate a transfer each time the sequencer checks this buffer. Data words are retransmitted if the buffer has not been updated. Receive data is overwritten, even if it has not been read.
		5h	**suspend single-transfer mode.** Suspend-to-wait until the corresponding TXFULL flag is set (the sequencer stops at the current buffer until new transmit data is written in the TXDATA field).
		6h	**suspend overwrite-protect mode.** Suspend-to-wait until the corresponding RXEMPTY flag is set (the sequencer stops at the current buffer until the previously-received data is read by the host.
		7h	**suspend single-transfer overwrite-protect mode.** Suspend-to-wait until the corresponding TXFULL and RXEMPTY flags are set (the sequencer stops at the current buffer until new transmit data is written into the TXDATA field and the previously-received data is read by the host).

Copyright © 2025 Texas Instruments Incorporated

Table 11-235. Multi-Buffer RAM Transmit Data Register (TXRAM) Field Descriptions (continued)

Bit	Field	Value	Description
28	CSHOLD		Chip select hold mode. The CSHOLD bit is supported in master mode only, it is ignored in slave mode. CSHOLD defines the behavior of the chip select line at the end of a data transfer.
		0	The chip select signal is deactivated at the end of a transfer after the T2CDELAY time has passed. If two consecutive transfers are dedicated to the same chip select this chip select signal will be deactivated for at least 2VCLK cycles before it is activated again.
		1	The chip select signal is held active at the end of a transfer until a control field with new data and control information is loaded into SPIDAT1. If the new chip select number equals the previous one, the active chip select signal is extended until the end of transfer with CSHOLD cleared, or until the chip-select number changes.
27	LOCK		Lock two consecutive buffer words. Do not allow interruption by TGs with higher priority.
		0	Any higher-priority TG can begin at the end of the current transaction.
		1	A higher-priority TG cannot occur until after the next unlocked buffer word is transferred.
26	WDEL		Enable the delay counter at the end of the current transaction.
			Note: The WDEL bit is supported in master mode only. In slave mode, this bit is ignored.
		0	No delay will be inserted. However, $\overline{\text{SPICS}}$ pins will still be de-activated for at least for 2VCLK cycles if CSHOLD = 0.
			Note: The duration for which the $\overline{\text{SPICS}}$ pin remains deactivated also depends upon the time taken to supply a new word after completing the shift operation (in compatibility mode). If TXBUF is already full, then the $\overline{\text{SPICS}}$ pin will be deasserted for at least two VCLK cycles (if WDEL = 0).
		1	After a transaction, WDELAY of the corresponding data format will be loaded into the delay counter. No transaction will be performed until the WDELAY counter overflows. The $\overline{\text{SPICS}}$ pins will be de-activated for at least (WDELAY + 2) × VCLK_Period duration.
25-24	DFSEL		Data word format select.
		0	Data word format 0 is selected.
		1h	Data word format 1 is selected.
		2h	Data word format 2 is selected.
		3h	Data word format 3 is selected.
23-16	CSNR	0-FFh	Chip select (CS) number. CSNR defines the chip select pins that will be activated during the data transfer. CSNR is a bit-mask that controls all chip select pins. See Table 11-236.
			Note: If your MibSPI has less than 8 chip select pins, all unused upper bits will be 0. For example, MiBSPI3 has 6 chip select pins, if you write FFh to CSNR, the actual number stored in CSNR is 3Fh.
15-0	TXDATA	0-7FFFh	Transfer data. When written, these bits are copied to the shift register if it is empty. If the shift register is not empty, then they are held in TXBUF.
			SPIEN must be set to 1 before this register can be written to. Writing a 0 to SPIEN forces the lower 16 bits of TXDATA to 0.
			A write to this register (or to the TXDATA field only) drives the contents of the CSNR field on the $\overline{\text{SPICS}}$ pins, if the pins are configured as functional pins (automatic chip select, see Section 11.1.4.2).
			When this register is read, the contents of TXBUF, which holds the latest data written, will be returned.
			Note: Regardless of the character length, the transmit data should be right-justified before writing to the SPIDAT1 register.

Copyright © 2025 Texas Instruments Incorporated

Table 11-236. Chip Select Number Active

CSNR Value	Chip Select Active:							CSNR Value	Chip Select Active:					
	CS[5](1)	CS[4](1)	CS[3](1)	CS[2](1)	CS[1](1)	CS[0]			CS[5](1)	CS[4](1)	CS[3](1)	CS[2](1)	CS[1](1)	CS[0]
0h	No chip select pin is active.							20h	x					
1h						x		21h	x					x
2h					x			22h	x				x	
3h					x	x		23h	x				x	x
4h				x				24h	x			x		
5h				x		x		25h	x			x		x
6h				x	x			26h	x			x	x	
7h				x	x	x		27h	x			x	x	x
8h			x					28h	x		x			
9h			x			x		29h	x		x			x
Ah			x		x			2Ah	x		x		x	
Bh			x		x	x		2Bh	x		x		x	x
Ch			x	x				2Ch	x		x	x		
Dh			x	x		x		2Dh	x		x	x		x
Eh			x	x	x			2Eh	x		x	x	x	
Fh			x	x	x	x		2Fh	x		x	x	x	x
10h		x						30h	x	x				
11h		x				x		31h	x	x				x
12h		x			x			32h	x	x			x	
13h		x			x	x		33h	x	x			x	x
14h		x		x				34h	x	x		x		
15h		x		x		x		35h	x	x		x		x
16h		x		x	x			36h	x	x		x	x	
17h		x		x	x	x		37h	x	x		x	x	x
18h		x	x					38h	x	x	x			
19h		x	x			x		39h	x	x	x			x
1Ah		x	x		x			3Ah	x	x	x		x	
1Bh		x	x		x	x		3Bh	x	x	x		x	x
1Ch		x	x	x				3Ch	x	x	x	x		
1Dh		x	x	x		x		3Dh	x	x	x	x		x
1Eh		x	x	x	x			3Eh	x	x	x	x	x	
1Fh		x	x	x	x	x		3Fh	x	x	x	x	x	x

(1) If your MibSPI does not have this chip select pin, this bit is 0.

Copyright © 2025 Texas Instruments Incorporated

11.1.4.9.4 Multi-Buffer RAM Receive Buffer Register (RXRAM)

Each word of RXRAM is a receive-buffer register.

Figure 11-104. Multi-Buffer RAM Receive Buffer Register (RXRAM) [offset = RAM Base + 200h-3FFh]

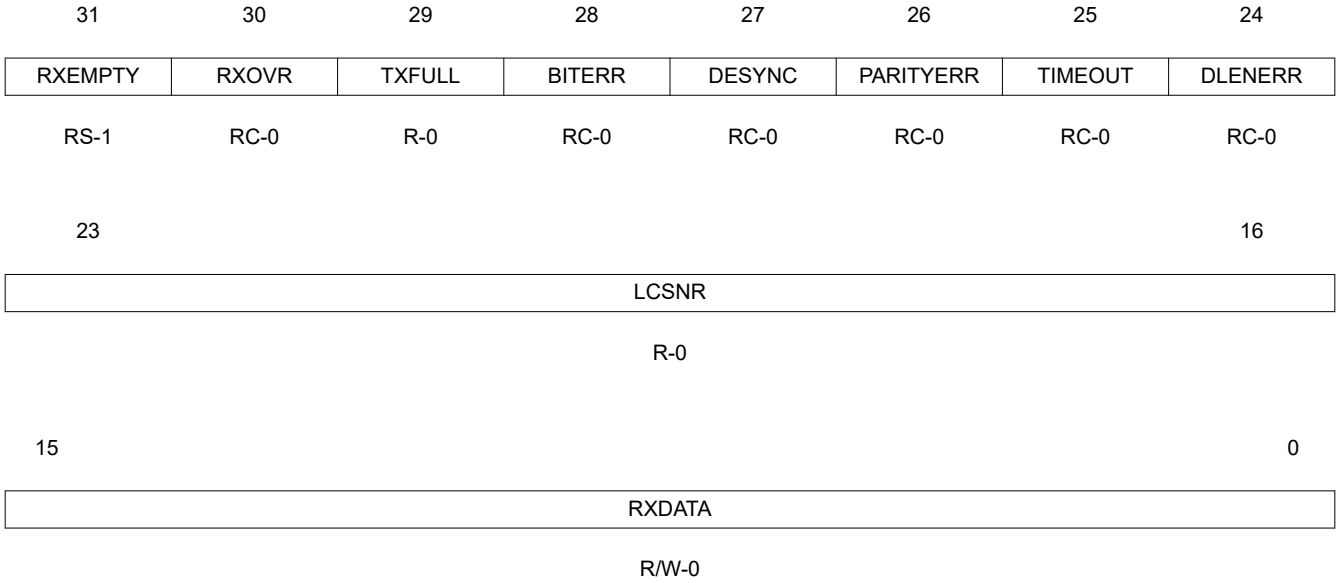

LEGEND: R/W = Read/Write; R = Read only; C = Clear; S = Set; -*n* = value after reset

Table 11-237. Multi-Buffer Receive Buffer Register (RXRAM) Field Descriptions

Bit	Field	Value	Description
31	RXEMPTY		Receive data buffer empty. When the host reads the RXDATA field or the entire RXRAM register, it automatically sets the RXEMPTY flag. When a data transfer is completed, the received data is copied into RXDATA, and the RXEMPTY flag is cleared.
		0	New data has been received and copied into RXDATA.
		1	No data has been received since the last read of RXDATA.
			This flag gets set to 1 under the following conditions: • Reading the RXDATA field of the RXRAM register • Writing a 1 to clear the RXINTFLG bit in the SPI Flag Register (SPIFLG) Write-clearing the RXINTFLG bit before reading RXDATA indicates the received data is being ignored. Conversely, RXINTFLG can be cleared by reading the RXDATA field of RXRAM (or the entire register).
30	RXOVR		Receive data buffer overrun. When a data transfer is completed and the received data is copied into RXBUF while it is already full, RXOVR is set. Overruns always occur to RXBUF, not to RXRAM; the contents of RXRAM are overwritten only after it is read by the Peripheral (VBUSP) master (CPU, DMA, or other host processor). If enabled, the RXOVRN interrupt is generated when RXBUF is overwritten, and reading either SPI Flag Register (SPIFLG) or SPIVECTx shows the RXOVRN condition. Two read operations from the RXRAM register are required to reach the overwritten buffer word (one to read RXRAM, which then transfers RXDATA into RXRAM for the second read). **Note: This flag is cleared to 0 when the RXDATA field of the RXRAM register is read.** **Note: A special condition under which RXOVR flag gets set. If both RXRAM and RXBUF are already full and while another buffer receive is underway, if any errors such as TIMEOUT, BITERR, and DLEN_ERR occur, then RXOVR in RXBUF and SPI Flag Register (SPIFLG) registers will be set to indicate that the status flags are getting overwritten by the new transfer. This overrun should be treated like a normal receive overrun.**
		0	No receive data overrun condition occurred since last read of the data field.
		1	A receive data overrun condition occurred since last read of the data field.

Copyright © 2025 Texas Instruments Incorporated

Table 11-237. Multi-Buffer Receive Buffer Register (RXRAM) Field Descriptions (continued)

Bit	Field	Value	Description
29	TXFULL		Transmit data buffer full. This flag is a read-only flag. Writing into the SPIDAT0 or SPIDAT1 field while the TX shift register is full will automatically set the TXFULL flag. Once the word is copied to the shift register, the TXFULL flag will be cleared. Writing to SPIDAT0 or SPIDAT1 when both TXBUF and the TX shift register are empty does not set the TXFULL flag.
		0	The transmit buffer is empty; SPIDAT0/SPIDAT1 is ready to accept a new data.
		1	The transmit buffer is full; SPIDAT0/SPIDAT1 is not ready to accept new data.
28	BITERR		Bit error. There was a mismatch of internal transmit data and transmitted data.
			Note: This flag is cleared to 0 when the RXDATA field of the RXRAM register is read.
		0	No bit error occurred.
		1	A bit error occurred. The SPI samples the signal of the transmit pins (master: SIMOx, slave: SOMIx) at the receive point (one-half clock cycle after the transmit point). If the sampled value differs from the transmitted value, a bit error is detected and the BITERR flag is set. Possible reasons for a bit error include noise, an excessively high bit rate, capacitive load, or another master/slave trying to transmit at the same time.
27	DESYNC		Desynchronization of slave device. This bit is valid in master mode only.
			The master monitors the ENA signal coming from the slave device and sets the DESYNC flag if ENA is deactivated before the last reception point or after the last bit is transmitted plus $t_{T2EDELAY}$. If DESYNCENA is set, an interrupt is asserted. Desynchronization can occur if a slave device misses a clock edge coming from the master.
			Note: In the Compatibility Mode MibSPI, under some circumstances it is possible for a desync error detected for the previous buffer to be visible in the current buffer. This is because the receive completion flag/interrupt is generated when the buffer transfer is completed. But desynchronization is detected after the buffer transfer is completed. So, if the VBUS master reads the received data quickly when an RXINT is detected, then the status flag may not reflect the correct desync condition. In multi-buffer mode, the desync flag is always guaranteed to be for the current buffer.
			Note: This flag is cleared to 0 when the RXDATA field of the RXRAM register is read.
		0	No slave desynchronization is detected.
		1	A slave device is desynchronized.
26	PARITYERR		Parity error. The calculated parity differs from the received parity bit.
			If the parity generator is enabled (selected individually for each buffer) an even or odd parity bit is added at the end of a data word. During reception of the data word, the parity generator calculates the reference parity and compares it to the received parity bit. If a mismatch is detected, the PARITYERR flag is set.
			Note: This flag is cleared to 0 when the RXDATA field of the RXRAM register is read.
		0	No parity error is detected.
		1	A parity error occurred.
25	TIMEOUT		Time-out because of non-activation of $\overline{\text{SPIENA}}$ pin.
			The SPI generates a time-out when the slave does not respond in time by activating the ENA signal after the chip select signal has been activated. If a time-out condition is detected, the corresponding chip select is deactivated immediately and the TIMEOUT flag is set. In addition, the TIMEOUT flag in the status field of the corresponding buffer and in the SPI Flag Register (SPIFLG) is set.
			Note: This bit is valid only in master mode.
			Note: This flag is cleared to 0 when the RXDATA field of the RXRAM register is read.
		0	No $\overline{\text{SPIENA}}$ pin time-out occurred.
		1	An $\overline{\text{SPIENA}}$ signal time-out occurred.
24	DLENERR		Data length error flag.
			Note: This flag is cleared to 0 when the RXDATA field of the RXRAM register is read.
		0	No data-length error occurred.
		1	A data length error occurred.
23-16	LCSNR	0-FFh	Last chip select number. LCSNR in the status field is a copy of CSNR in the corresponding control field. It contains the chip select number that was activated during the last word transfer.

Copyright © 2025 Texas Instruments Incorporated

Table 11-237. Multi-Buffer Receive Buffer Register (RXRAM) Field Descriptions (continued)

Bit	Field	Value	Description
15-0	RXDATA	0-FFFFh	SPI receive data. This is the received word, transferred from the receive shift-register at the end of a transfer. Regardless of the programmed character length and the direction of shifting, the received data is stored right-justified in the register.

Copyright © 2025 Texas Instruments Incorporated

11.1.4.10 Parity Memory

The parity portion of multi-buffer RAM is not accessible by the CPU during normal operating modes. However, each read or write operation to the control/data/status portion of the multi-buffer RAM causes reads/writes to the parity portion as well.

- Each write to the multi-buffer RAM (either from the Peripheral interface or by the MibSPI itself) causes a write operation to the parity portion of RAM simultaneously to update the equivalent parity bits.
- Each read operation from the multi-buffer RAM (either from the Peripheral interface or by the MibSPI itself) causes a read operation from the parity portion of the RAM for parity comparison purpose.
- Reads/Writes to multi-buffer RAM can either be caused by any CPU/DMA accesses or by the sequencer logic of MibSPI itself.
- Incase of Parity error ESM module is notified to generate MIBSPI Parity ESM interrupt. User can check the error status and address location captured in the UERRSTAT and UERRADDRx registers respectively.

For testing the parity portion of the multi-buffer RAM, which is a 4-bit field per word address (1 bit per byte), a separate parity memory test mode is available. Parity memory test mode can be enabled and disabled by the PTESTEN bit in the UERRCTRL register.

During the parity test mode, the parity locations are addressable at the address between RAM_BASE_ADDR + 0x400h and RAM_BASE_ADDR + 0x7FFh. Each location corresponds, sequentially, to each TXRAM word, then to each RXRAM word. See Figure 11-105 for a diagram of the memory map of parity memory during normal operating mode and during parity test mode.

During parity test mode, after writing the data/control portion of the RAM, the parity locations can be written with incorrect parity bits to intentionally cause parity errors.

See the device-specific data sheet to get the actual base address of the multi-buffer RAM.

Note

The RX_RAM_ACCESS bit can also be set to 1 during the parity test mode to be enable writes to RXRAM locations. Both parity RAM testing and RXRAM testing can be done together.

There are 4 bits of parity corresponding to each of the 32-bit multi-buffer locations. Individual bits in the parity memory are byte-addressable in parity test mode. See the example in Figure 11-106 for further details.

Note

Polarity of the parity (odd/even) varies by device. In some devices, a control register in the system module can be used to select odd or even parity.

Copyright © 2025 Texas Instruments Incorporated

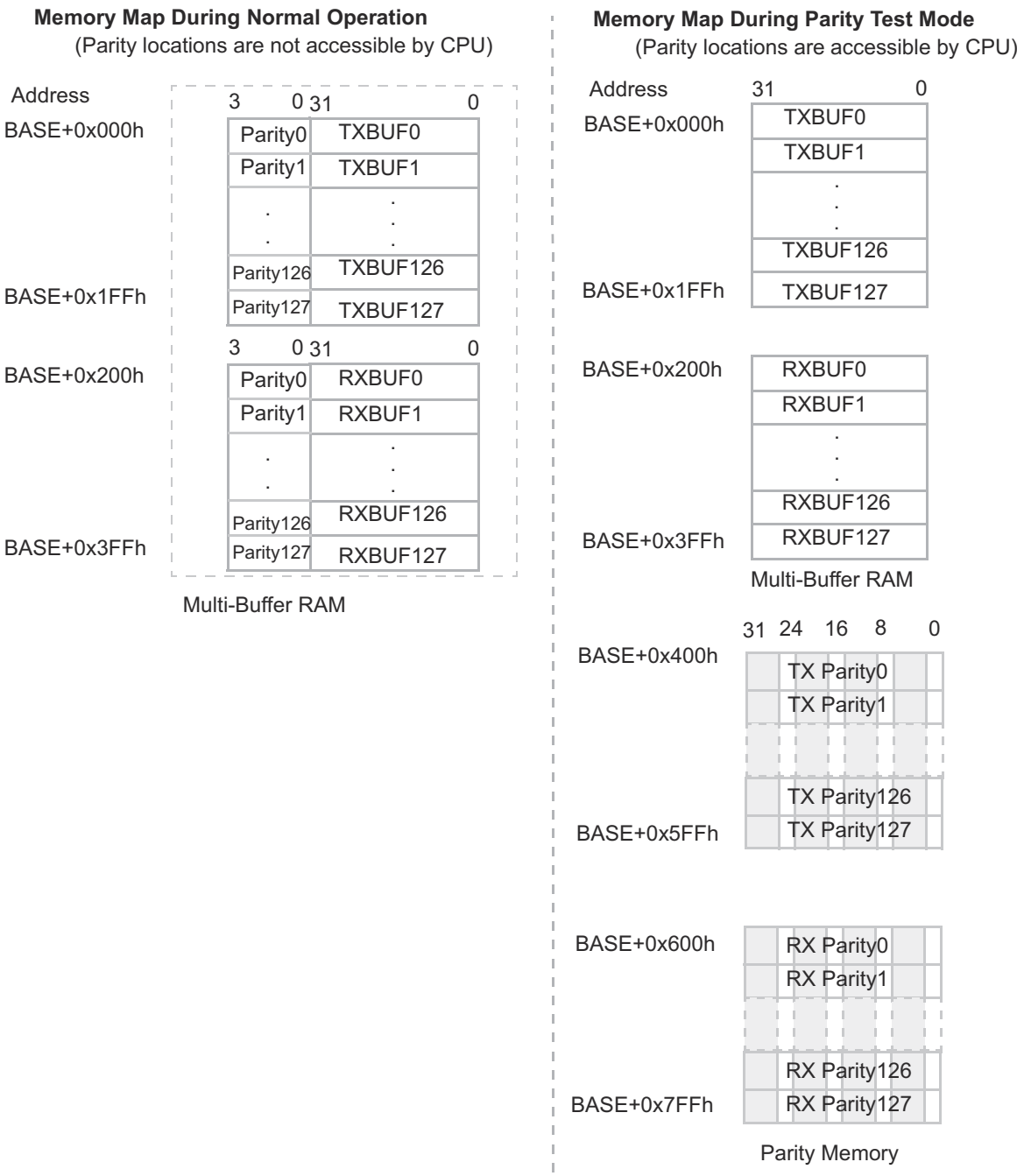

Figure 11-105. Memory Map for Parity Locations During Normal and Test Mode

Copyright © 2025 Texas Instruments Incorporated

11.1.4.10.1 Example of Parity Memory Organization

Suppose TXBUF5 (6th location in TXRAM) in the multi-buffer RAM is written with a value of A001_AA55. If the polarity of the parity is set to odd, the corresponding parity location parity5 will get updated with equivalent parity of 1011 in its field.

During parity-memory test mode, these bits can be individually byte addressed. The return data will be a byte adjusted with actual parity bit in the LSB of the byte. If a word is read from the word-boundary address of parity locations, then each bit of the 4-bit parity is byte-adjusted and a 32-bit word is returned. 0s will be padded into the parity bits to get each byte. See Figure 11-106 for a diagram.

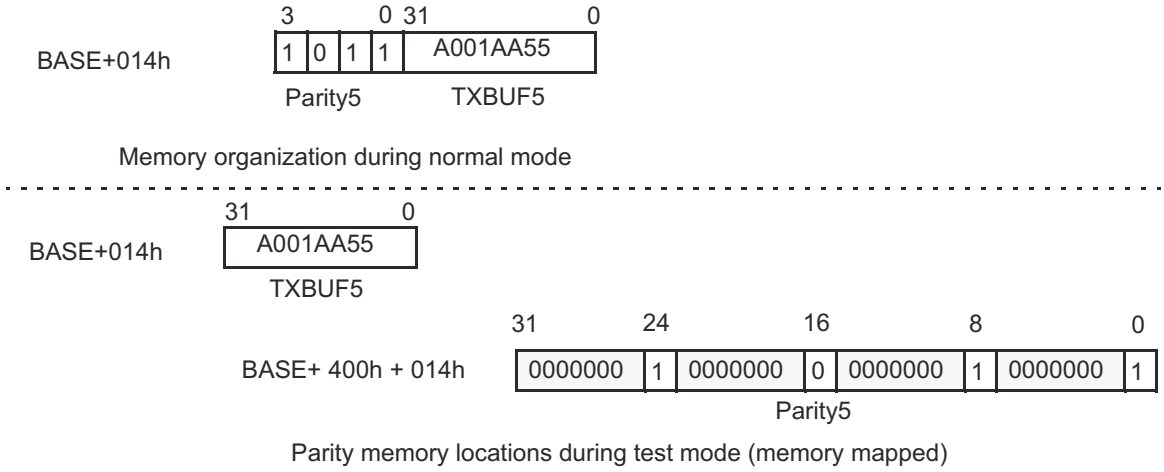

Parity memory locations during test mode (memory mapped)

1 Shaded areas indicate reads return 0, writes have no effect. These registers are not physically present.

Figure 11-106. Example of Memory-Mapped Parity Locations During Test Mode

Note

Read Access to Parity Memory Locations

Parity memory locations can be read even without entering into parity memory test mode. Their address remains as in memory test mode. It is only to enter parity-memory test mode to enable write access to the parity memory locations.

Copyright © 2025 Texas Instruments Incorporated

11.1.4.11 MibSPI Pin Timing Parameters

The pin timings of SPI can be classified based on its mode of operation. In each mode, different configurations like Phase and Polarity affect the pin timings.

The pin directions are based on the mode of operation.

Controller mode SPI:

- SPICLK (SPI Clock) - Output
- SPISIMO (SPI Peripheral In Controller Out) - Output
- $\overline{\text{SPICS}}$ (SPI Peripheral Chip Selects) - Output
- SPISOMI (SPI Peripheral Out Controller In) - Input
- $\overline{\text{SPIENA}}$ (SPI Peripheral ready Enable) - Input

Peripheral mode SPI:

- SPICLK - Input
- SPISIMO - Input
- $\overline{\text{SPICS}}$ - Input
- SPISOMI - Output
- $\overline{\text{SPIENA}}$ - Output

Note

All the timing diagrams given below are with Phase = 0 and Polarity = 0. unless explicitly stated otherwise.

11.1.4.11.1 Controller Mode Timings for SPI/MibSPI

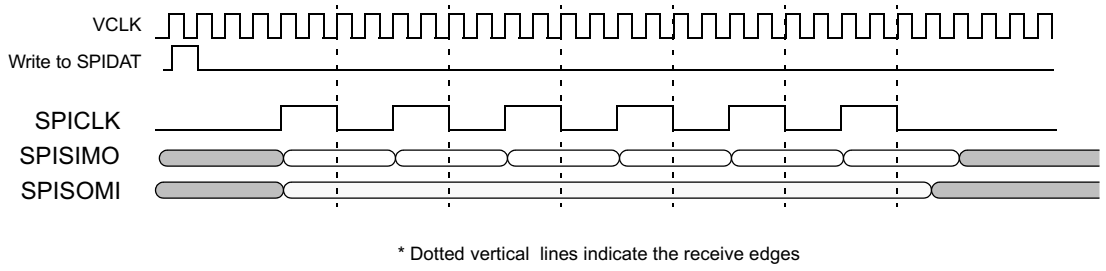

Figure 11-107. SPI/MibSPI Pins During Controller Mode 3-pin Configuration

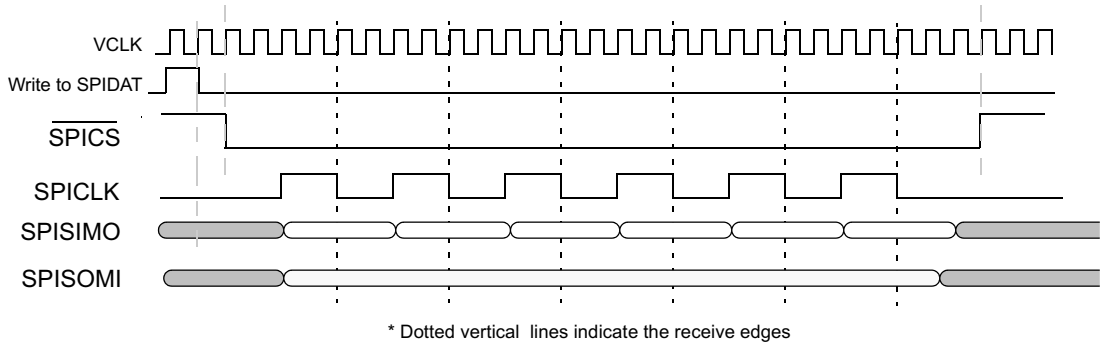

Figure 11-108. SPI/MibSPI Pins During Controller Mode 4-pin with $\overline{\text{SPICS}}$ Configuration

Copyright © 2025 Texas Instruments Incorporated

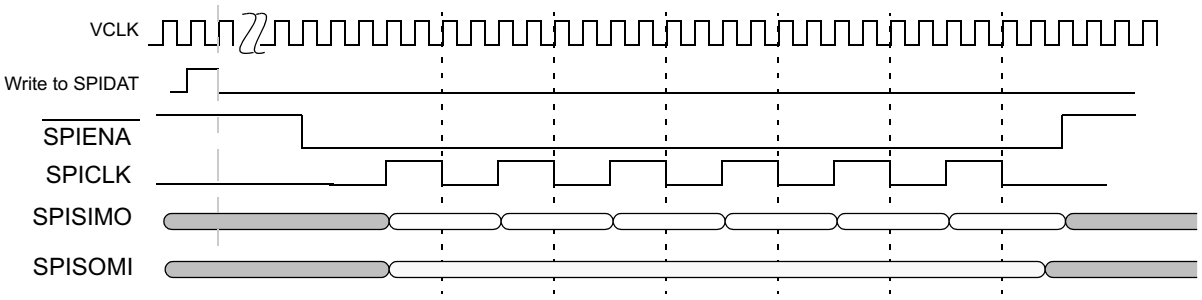

* De-activation of SPIENA pin is controlled by the Slave.
* Dotted vertical lines indicate the receive edges

Figure 11-109. SPI/MibSPI Pins During Controller Mode 4-pin with SPIENA Configuration

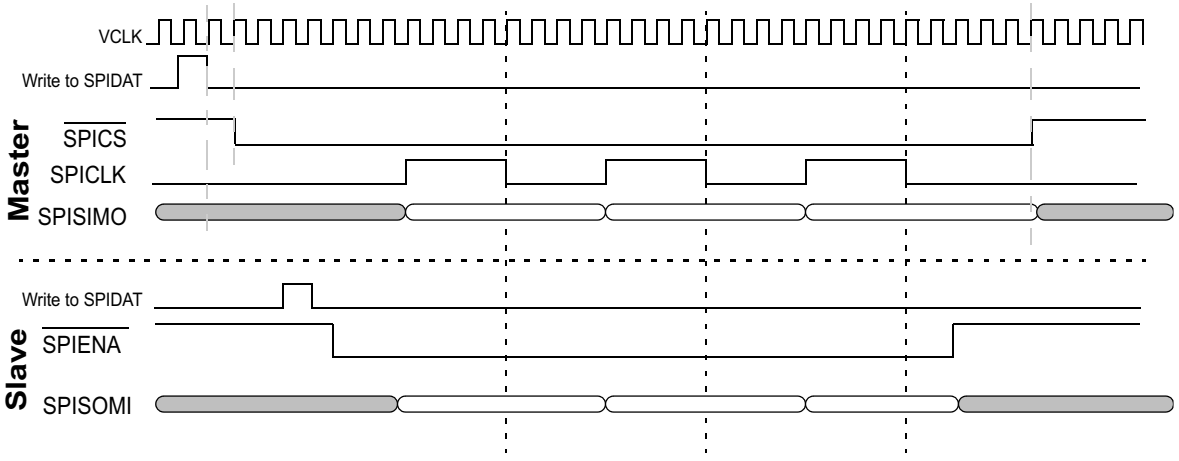

* Dotted vertical lines indicate the receive edges for the Master
* ENABLE_HIGHZ is cleared to 0 in Slave SPI

Figure 11-110. SPI/MibSPI Pins During Controller/Peripheral Mode with 5-pin Configuration

Copyright © 2025 Texas Instruments Incorporated

11.1.4.11.2 Peripheral Mode Timings for SPI/MibSPI

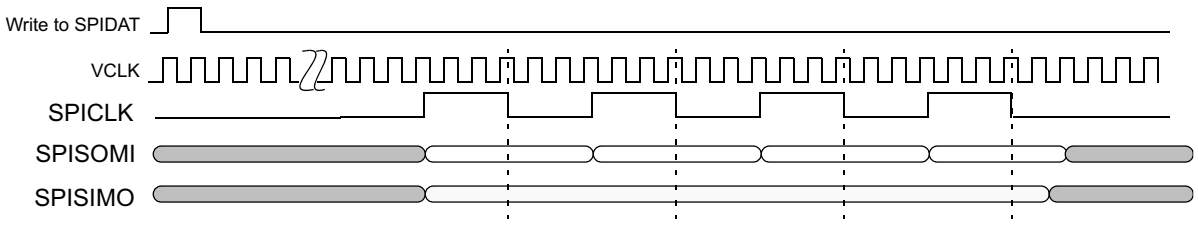

* Dotted vertical lines indicate the receive edges

Figure 11-111. SPI/MibSPI Pins During Peripheral Mode 3-pin Configuration

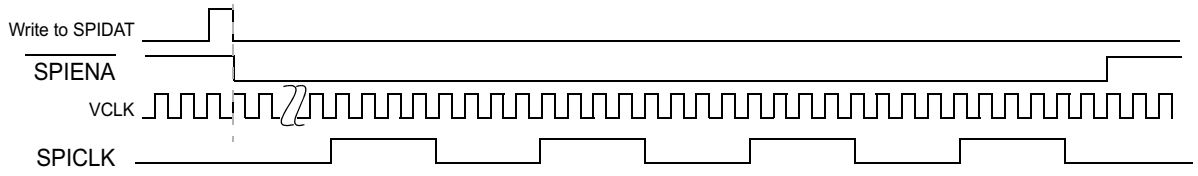

* Diagram shows a relationship between the $\overline{\text{SPIENA}}$ from Slave and SPICLK from Master

Figure 11-112. SPI/MibSPI Pins During Peripheral Mode 4-pin with $\overline{\text{SPIENA}}$ Configuration

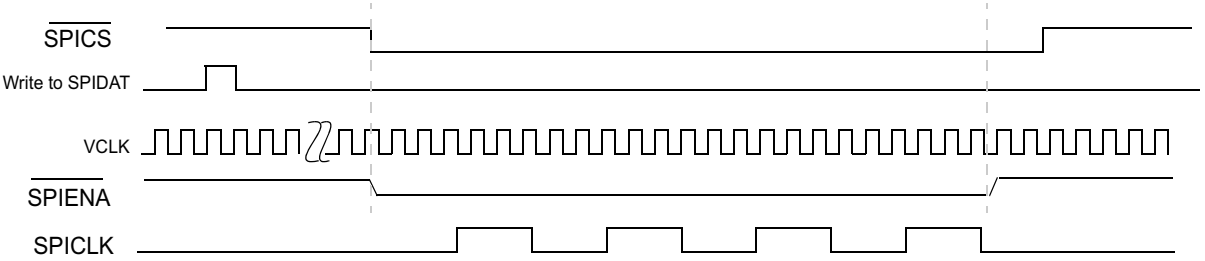

* ENABLE_HIGHZ is cleared to 0 in Slave SPI
* Diagram shows relationship between the $\overline{\text{SPICS}}$ from a Master to $\overline{\text{SPIENA}}$ from Slave SPI when $\overline{\text{SPIENA}}$ is configured in Push-Pull mode

Figure 11-113. SPI/MibSPI Pins During Peripheral Mode in 5-pin Configuration - (Single Peripheral)

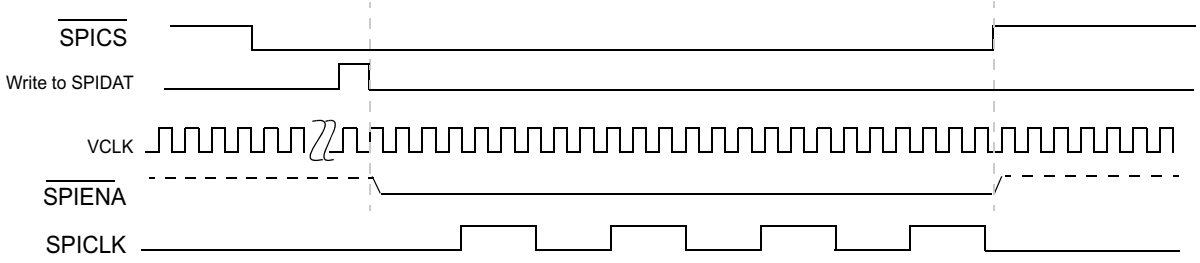

* ENABLE_HIGHZ is set to 1 in Slave SPI
* Diagram shows relationship between the $\overline{\text{SPICS}}$ from a Master to $\overline{\text{SPIENA}}$ from Slave SPI when $\overline{\text{SPIENA}}$ is configured in High-Impedance mode

Figure 11-114. SPI/MibSPI Pins During Peripheral Mode in 5-pin Configuration - (Single/Multi Peripheral)

Copyright © 2025 Texas Instruments Incorporated

11.1.4.11.3 Controller Timing Parameter Details

In case of Controller the module drives out SPICLK. It also drives out the Transmit data on SPISIMO with respect to its internal SPICLK. In case of Controller mode, the RX data on the SPISOMI pin is registered with respect to SPICLK received through the input buffer from the I/O pad.

If the chip select pin is functional, then the Controller will drive out the $\overline{\text{SPICS}}$ pins before starting the SPICLK. If the $\overline{\text{SPIENA}}$ pin is functional, then Controller will wait for an active low from the Peripheral on the input pin to start the SPICLK.

11.1.4.11.4 Peripheral Mode Timing Parameter Details

In case of Peripheral mode, the module will drive only the SPISOMI and $\overline{\text{SPIENA}}$ pins. All other pins are inputs to it. The RX data on the SPISIMO pin will be registered with respect to the SPICLK pin. The Peripheral will use the $\overline{\text{SPICS}}$ pin to drive out the $\overline{\text{SPIENA}}$ pin if both are functional. If 4-pin with $\overline{\text{SPIENA}}$ is configured, then the Peripheral will drive out an active-low signal on the $\overline{\text{SPIENA}}$ pin when new data is written to the TX Shift Register. Irrespective of 4-pin with $\overline{\text{SPIENA}}$ or 5-pin configuration, the Peripheral will deassert the $\overline{\text{SPIENA}}$ pin after the last bit is received. If ENABLE_HIGHZ (SPIINT0.24) bit is 0, the deasserted value of the $\overline{\text{SPIENA}}$ pin will be 1. Otherwise, it will depend upon the internal pull up or pull down resistor (if implemented) depending upon the Specification of the Chip.

11.1.5 GPADC

11.1.5.1 GPADC Overview

The AM273x device implements a GPADC module on MainSS for safety monitoring the inputs, such as the temp sensor, voltage regulators, and so forth; both external and internal to the device. Features supported by the ADC module include:

- 10-bit ENOB 625Ksps ADC
- Full-scale range of GPADC input between 0 V and 1.8 V
- 9 external I/Os and internal components -temperature sensors (3), supplies, bias reference, LDO output mapped to GPADC input
  - For details on accessing the internal components (also known as channels) and temperature sensors, please refer to the GPADC SDK documentation
- Total capacitance, including parasitic and sampling cap, for each of GPADC pins be less than 14pf
- Event pin and software command mechanism to trigger the conversion
  - Event signal from either of the GPIO (provides options with pinmuxing) as well as from RTI timer module
- Data RAM to store the conversion results (1K results)
- Storage of min, max, and sum of the samples captured per channel
- Mechanism to skip initial M samples and program the number of samples N to be collected every channel
- Instruction PARAMs RAM to program the channels is monitored
- Mechanism to execute the instruction PARAMs in a circular manner without any CPU intervention
- DMA trigger when conversion is completed or data RAM threshold is achieved
- Self-test logic support for input channel failure detection (open / short to power / short to ground)
- Calibration logic using BGAP, for offset error correction
- Separate operating supply and ground pins on package
- Capability to have an external reference voltage for GPADC

Copyright © 2025 Texas Instruments Incorporated

11.1.5.2 Functional Description Modes of Operation

11.1.5.2.1 IFM Mode (Inter Frame Monitoring Mode)

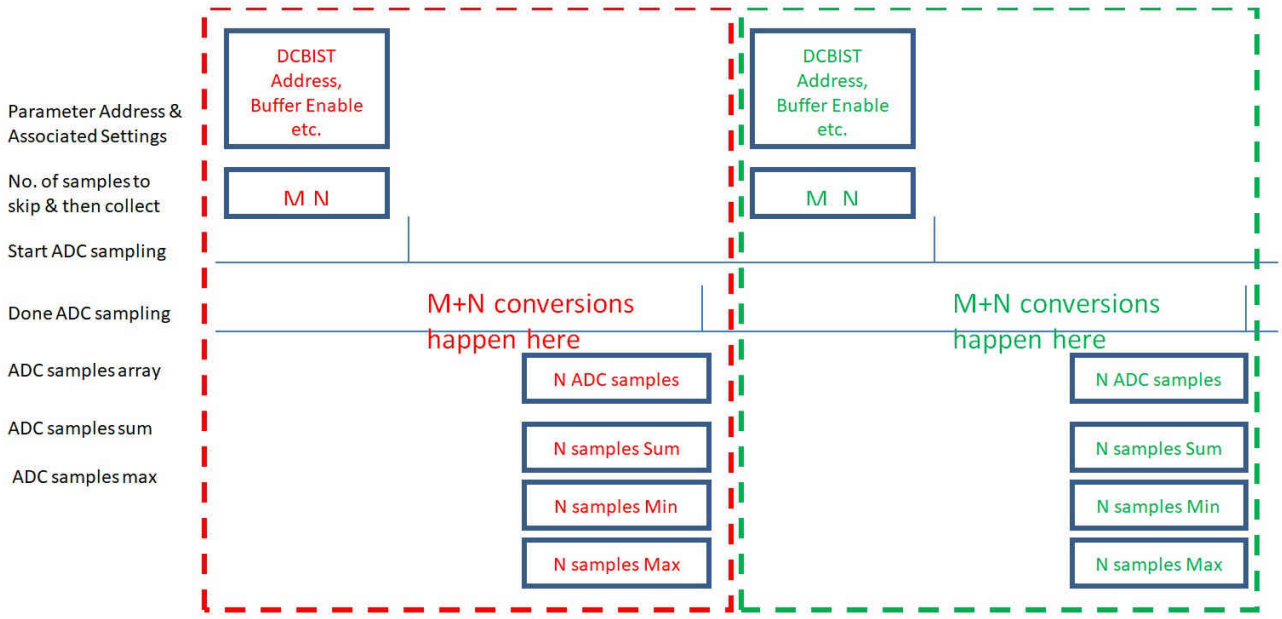

Figure 11-115. IFM Mode

Firmware writes the following register bit fields:

- Param_val_ifm
- Config_value_ifm
- Skip_samples_ifm(M)
- Collect_samples_ifm(N)
- Config settings in Analog
- ADC Reset =0
- ADC Enable =1
- ADC Start =1
- Firmware issues GPADC Trigger (self clearing bit)

Hardware skips M samples, collects N samples. Hardware outputs the sum, min, max of those samples in a register. Hardware outputs the actual array of samples in Data RAM (debug, if enabled). Each entry in the data RAM (256 deep) contains 4 ADC data samples, i.e. 1K ADC samples can be stored in the data RAM. Hardware issues a done interrupt.

11.1.5.2.2 CTM Mode (Continuous Time Monitoring Mode)

Before frame, the firmware programs parameters to be measured for all data-profiles in the instruction packet RAM. Firmware writes “Gpadc_init_mem” =1 (self-clearing) to initialize the data RAM to all ‘0’s.

Configure settings in Analog

ADC Reset =0

ADC Enable =1

ADC Start =1

Program the instructions to be performed in instruction packet RAM.

GPADC_CTM_Trigger starts the CTM mode operation and finishes after completing the programmed instructions. At end of the operation, the firmware can read or process min-max-average.

Copyright © 2025 Texas Instruments Incorporated

11.1.5.3 Interrupts

The following interrupt is generated by GPADC:

- MSS_GPADC_IFM_DONE

11.1.5.4 GPADC Trigger Sources

11.1.5.4.1 IFM Mode

Writing 1'b1 to MSS_GPADC_REG::REG1:: GPADC_TRIGGER generates a trigger for IFM Mode to start.

11.1.5.4.2 CTM Mode

Table 11-238 shows the 16 trigger sources for CTM Mode.

Table 11-238. CTM Mode Trigger Sources

No.	Trigger Source
0	GPIO_0
1	GPIO_1
2	GPIO_2
3	GPIO_3
4	RSS_CSI2A_EOL_INT
5	RSS_CSI2A_SOF_INT0
6	RSS_CSI2A_SOF_INT1
7	RSS_CSI2A_SOF_INT
8	RSS_CSI2B_SOF_INT
9	HW_Sync_FE1
10	HW_Sync_FE2
11	DSS_RTIA_1
12	DSS_RTIB_1
13	MSS_RTIA_INT1
14	MSS_RTIB_INT1
15	MMR based SW trigger

MSS_CTRL::GPADC_CTRL::GPADC_CTRL_GPADC_TRIGIN_SEL is used for selecting the trigger source for CTM mode.

Writing 1'b1 to MSS_CTRL::GPADC_CTRL::GPADC_CTRL_GPADC_SW_TRIG triggers the 15th trigger in Table 11-238.

11.1.5.5 MSS GPADC Register Specification

11.1.5.5.1 MSS_GPADC_PKT_RAM Registers

lists the MSS_GPADC_PKT_RAM registers. All register offset addresses not listed in should be considered as reserved locations and the register contents should not be modified.

Table 11-239. MSS_GPADC_PKT_RAM Registers

Offset	Acronym	Register Notes	Section
0+4*Nh	INST**N**_0	Where **N** goes from 0-255	Section 12.1.5.5.1.1
4+4*Nh	INST**N**_1	Where **N** goes from 0-255	Section 12.1.5.5.1.2

Copyright © 2025 Texas Instruments Incorporated

11.1.5.5.1.1 INSTN_0 Register (Offset = 0h) [reset = 0h]

INST**N**_0 is shown in and described in .

Return to the .

Table 11-240. MSS_GPADC_PKT_RAM INST0 Registers

Instance Name	Offset
INST0_0	0h
INST1_0	8h
INST2_0	10h
INST3_0	18h
INST4_0	20h
INST5_0	28h
INST6_0	30h
INST7_0	38h
INST8_0	40h
INST9_0	48h
INST10_0	50h
INST11_0	58h
INST12_0	60h
INST13_0	68h
INST14_0	70h
INST15_0	78h
INST16_0	80h
INST17_0	88h
INST18_0	90h
INST19_0	98h
INST20_0	A0h
INST21_0	A8h
INST22_0	B0h
INST23_0	B8h
INST24_0	C0h
INST25_0	C8h
INST26_0	D0h
INST27_0	D8h
INST28_0	E0h
INST29_0	E8h
INST30_0	F0h
INST31_0	F8h
INST32_0	100h
INST33_0	108h
INST34_0	110h
INST35_0	118h
INST36_0	120h
INST37_0	128h
INST38_0	130h
INST39_0	138h
INST40_0	140h

Copyright © 2025 Texas Instruments Incorporated

Table 11-240. MSS_GPADC_PKT_RAM INST0 Registers (continued)

Instance Name	Offset
INST41_0	148h
INST42_0	150h
INST43_0	158h
INST44_0	160h
INST45_0	168h
INST46_0	170h
INST47_0	178h
INST48_0	180h
INST49_0	188h
INST50_0	190h
INST51_0	198h
INST52_0	1A0h
INST53_0	1A8h
INST54_0	1B0h
INST55_0	1B8h
INST56_0	1C0h
INST57_0	1C8h
INST58_0	1D0h
INST59_0	1D8h
INST60_0	1E0h
INST61_0	1E8h
INST62_0	1F0h
INST63_0	1F8h
INST64_0	200h
INST65_0	208h
INST66_0	210h
INST67_0	218h
INST68_0	220h
INST69_0	228h
INST70_0	230h
INST71_0	238h
INST72_0	240h
INST73_0	248h
INST74_0	250h
INST75_0	258h
INST76_0	260h
INST77_0	268h
INST78_0	270h
INST79_0	278h
INST80_0	280h
INST81_0	288h
INST82_0	290h
INST83_0	298h
INST84_0	2A0h
INST85_0	2A8h

Copyright © 2025 Texas Instruments Incorporated

Table 11-240. MSS_GPADC_PKT_RAM INST0 Registers (continued)

Instance Name	Offset
INST86_0	2B0h
INST87_0	2B8h
INST88_0	2C0h
INST89_0	2C8h
INST90_0	2D0h
INST91_0	2D8h
INST92_0	2E0h
INST93_0	2E8h
INST94_0	2F0h
INST95_0	2F8h
INST96_0	300h
INST97_0	308h
INST98_0	310h
INST99_0	318h
INST100_0	320h
INST101_0	328h
INST102_0	330h
INST103_0	338h
INST104_0	340h
INST105_0	348h
INST106_0	350h
INST107_0	358h
INST108_0	360h
INST109_0	368h
INST110_0	370h
INST111_0	378h
INST112_0	380h
INST113_0	388h
INST114_0	390h
INST115_0	398h
INST116_0	3A0h
INST117_0	3A8h
INST118_0	3B0h
INST119_0	3B8h
INST120_0	3C0h
INST121_0	3C8h
INST122_0	3D0h
INST123_0	3D8h
INST124_0	3E0h
INST125_0	3E8h
INST126_0	3F0h
INST127_0	3F8h
INST128_0	400h
INST129_0	408h
INST130_0	410h

Copyright © 2025 Texas Instruments Incorporated

Table 11-240. MSS_GPADC_PKT_RAM INST0 Registers (continued)

Instance Name	Offset
INST131_0	418h
INST132_0	420h
INST133_0	428h
INST134_0	430h
INST135_0	438h
INST136_0	440h
INST137_0	448h
INST138_0	450h
INST139_0	458h
INST140_0	460h
INST141_0	468h
INST142_0	470h
INST143_0	478h
INST144_0	480h
INST145_0	488h
INST146_0	490h
INST147_0	498h
INST148_0	4A0h
INST149_0	4A8h
INST150_0	4B0h
INST151_0	4B8h
INST152_0	4C0h
INST153_0	4C8h
INST154_0	4D0h
INST155_0	4D8h
INST156_0	4E0h
INST157_0	4E8h
INST158_0	4F0h
INST159_0	4F8h
INST160_0	500h
INST161_0	508h
INST162_0	510h
INST163_0	518h
INST164_0	520h
INST165_0	528h
INST166_0	530h
INST167_0	538h
INST168_0	540h
INST169_0	548h
INST170_0	550h
INST171_0	558h
INST172_0	560h
INST173_0	568h
INST174_0	570h
INST175_0	578h

Copyright © 2025 Texas Instruments Incorporated

Table 11-240. MSS_GPADC_PKT_RAM INST0 Registers (continued)

Instance Name	Offset
INST176_0	580h
INST177_0	588h
INST178_0	590h
INST179_0	598h
INST180_0	5A0h
INST181_0	5A8h
INST182_0	5B0h
INST183_0	5B8h
INST184_0	5C0h
INST185_0	5C8h
INST186_0	5D0h
INST187_0	5D8h
INST188_0	5E0h
INST189_0	5E8h
INST190_0	5F0h
INST191_0	5F8h
INST192_0	600h
INST193_0	608h
INST194_0	610h
INST195_0	618h
INST196_0	620h
INST197_0	628h
INST198_0	630h
INST199_0	638h
INST200_0	640h
INST201_0	648h
INST202_0	650h
INST203_0	658h
INST204_0	660h
INST205_0	668h
INST206_0	670h
INST207_0	678h
INST208_0	680h
INST209_0	688h
INST210_0	690h
INST211_0	698h
INST212_0	6A0h
INST213_0	6A8h
INST214_0	6B0h
INST215_0	6B8h
INST216_0	6C0h
INST217_0	6C8h
INST218_0	6D0h
INST219_0	6D8h
INST220_0	6E0h

Copyright © 2025 Texas Instruments Incorporated

Table 11-240. MSS_GPADC_PKT_RAM INST0 Registers (continued)

Instance Name	Offset
INST221_0	6E8h
INST222_0	6F0h
INST223_0	6F8h
INST224_0	700h
INST225_0	708h
INST226_0	710h
INST227_0	718h
INST228_0	720h
INST229_0	728h
INST230_0	730h
INST231_0	738h
INST232_0	740h
INST233_0	748h
INST234_0	750h
INST235_0	758h
INST236_0	760h
INST237_0	768h
INST238_0	770h
INST239_0	778h
INST240_0	780h
INST241_0	788h
INST242_0	790h
INST243_0	798h
INST244_0	7A0h
INST245_0	7A8h
INST246_0	7B0h
INST247_0	7B8h
INST248_0	7C0h
INST249_0	7C8h
INST250_0	7D0h
INST251_0	7D8h
INST252_0	7E0h
INST253_0	7E8h
INST254_0	7F0h
INST255_0	7F8h

Figure 11-116. INSTN_0 Register

31	30	29	28	27	26	25	24	23	22	21	20	19	18	17	16	15	14	13	12	11	10	9	8	7	6	5	4	3	2	1	0
CONFIG_VALUE																															
R/W-0h																															

Table 11-241. INSTN_0 Register Field Descriptions

Bit	Field	Type	Reset	Description
31-0	CONFIG_VALUE	R/W	0h	configuration value to be passed to analog

Copyright © 2025 Texas Instruments Incorporated

11.1.5.5.1.2 INSTN_1 Register (Offset = 4h) [reset = 0h]

INSTN_1 is shown in and described in .

Return to the .

Table 11-242. MSS_GPADC_PKT_RAM INST0 Registers

Acronym	Offset
INST0_1	4h
INST1_1	Ch
INST2_1	14h
INST3_1	1Ch
INST4_1	24h
INST5_1	2Ch
INST6_1	34h
INST7_1	3Ch
INST8_1	44h
INST9_1	4Ch
INST10_1	54h
INST11_1	5Ch
INST12_1	64h
INST13_1	6Ch
INST14_1	74h
INST15_1	7Ch
INST16_1	84h
INST17_1	8Ch
INST18_1	94h
INST19_1	9Ch
INST20_1	A4h
INST21_1	ACh
INST22_1	B4h
INST23_1	BCh
INST24_1	C4h
INST25_1	CCh
INST26_1	D4h
INST27_1	DCh
INST28_1	E4h
INST29_1	ECh
INST30_1	F4h
INST31_1	FCh
INST32_1	104h
INST33_1	10Ch
INST34_1	114h

Copyright © 2025 Texas Instruments Incorporated

Table 11-242. MSS_GPADC_PKT_RAM INST0 Registers (continued)

Acronym	Offset
INST35_1	11Ch
INST36_1	124h
INST37_1	12Ch
INST38_1	134h
INST39_1	13Ch
INST40_1	144h
INST41_1	14Ch
INST42_1	154h
INST43_1	15Ch
INST44_1	164h
INST45_1	16Ch
INST46_1	174h
INST47_1	17Ch
INST48_1	184h
INST49_1	18Ch
INST50_1	194h
INST51_1	19Ch
INST52_1	1A4h
INST53_1	1ACh
INST54_1	1B4h
INST55_1	1BCh
INST56_1	1C4h
INST57_1	1CCh
INST58_1	1D4h
INST59_1	1DCh
INST60_1	1E4h
INST61_1	1ECh
INST62_1	1F4h
INST63_1	1FCh
INST64_1	204h
INST65_1	20Ch
INST66_1	214h
INST67_1	21Ch
INST68_1	224h
INST69_1	22Ch
INST70_1	234h
INST71_1	23Ch

Copyright © 2025 Texas Instruments Incorporated

Table 11-242. MSS_GPADC_PKT_RAM INST0 Registers (continued)

Acronym	Offset
INST72_1	244h
INST73_1	24Ch
INST74_1	254h
INST75_1	25Ch
INST76_1	264h
INST77_1	26Ch
INST78_1	274h
INST79_1	27Ch
INST80_1	284h
INST81_1	28Ch
INST82_1	294h
INST83_1	29Ch
INST84_1	2A4h
INST85_1	2ACh
INST86_1	2B4h
INST87_1	2BCh
INST88_1	2C4h
INST89_1	2CCh
INST90_1	2D4h
INST91_1	2DCh
INST92_1	2E4h
INST93_1	2ECh
INST94_1	2F4h
INST95_1	2FCh
INST96_1	304h
INST97_1	30Ch
INST98_1	314h
INST99_1	31Ch
INST100_1	324h
INST101_1	32Ch
INST102_1	334h
INST103_1	33Ch
INST104_1	344h
INST105_1	34Ch
INST106_1	354h
INST107_1	35Ch
INST108_1	364h

Copyright © 2025 Texas Instruments Incorporated

Table 11-242. MSS_GPADC_PKT_RAM INST0 Registers (continued)

Acronym	Offset
INST109_1	36Ch
INST110_1	374h
INST111_1	37Ch
INST112_1	384h
INST113_1	38Ch
INST114_1	394h
INST115_1	39Ch
INST116_1	3A4h
INST117_1	3ACh
INST118_1	3B4h
INST119_1	3BCh
INST120_1	3C4h
INST121_1	3CCh
INST122_1	3D4h
INST123_1	3DCh
INST124_1	3E4h
INST125_1	3ECh
INST126_1	3F4h
INST127_1	3FCh
INST128_1	404h
INST129_1	40Ch
INST130_1	414h
INST131_1	41Ch
INST132_1	424h
INST133_1	42Ch
INST134_1	434h
INST135_1	43Ch
INST136_1	444h
INST137_1	44Ch
INST138_1	454h
INST139_1	45Ch
INST140_1	464h
INST141_1	46Ch
INST142_1	474h
INST143_1	47Ch
INST144_1	484h
INST145_1	48Ch

Copyright © 2025 Texas Instruments Incorporated

Table 11-242. MSS_GPADC_PKT_RAM INST0 Registers (continued)

Acronym	Offset
INST146_1	494h
INST147_1	49Ch
INST148_1	4A4h
INST149_1	4ACh
INST150_1	4B4h
INST151_1	4BCh
INST152_1	4C4h
INST153_1	4CCh
INST154_1	4D4h
INST155_1	4DCh
INST156_1	4E4h
INST157_1	4ECh
INST158_1	4F4h
INST159_1	4FCh
INST160_1	504h
INST161_1	50Ch
INST162_1	514h
INST163_1	51Ch
INST164_1	524h
INST165_1	52Ch
INST166_1	534h
INST167_1	53Ch
INST168_1	544h
INST169_1	54Ch
INST170_1	554h
INST171_1	55Ch
INST172_1	564h
INST173_1	56Ch
INST174_1	574h
INST175_1	57Ch
INST176_1	584h
INST177_1	58Ch
INST178_1	594h
INST179_1	59Ch
INST180_1	5A4h
INST181_1	5ACh
INST182_1	5B4h

Copyright © 2025 Texas Instruments Incorporated

Table 11-242. MSS_GPADC_PKT_RAM INST0 Registers (continued)

Acronym	Offset
INST183_1	5BCh
INST184_1	5C4h
INST185_1	5CCh
INST186_1	5D4h
INST187_1	5DCh
INST188_1	5E4h
INST189_1	5ECh
INST190_1	5F4h
INST191_1	5FCh
INST192_1	604h
INST193_1	60Ch
INST194_1	614h
INST195_1	61Ch
INST196_1	624h
INST197_1	62Ch
INST198_1	634h
INST199_1	63Ch
INST200_1	644h
INST201_1	64Ch
INST202_1	654h
INST203_1	65Ch
INST204_1	664h
INST205_1	66Ch
INST206_1	674h
INST207_1	67Ch
INST208_1	684h
INST209_1	68Ch
INST210_1	694h
INST211_1	69Ch
INST212_1	6A4h
INST213_1	6ACh
INST214_1	6B4h
INST215_1	6BCh
INST216_1	6C4h
INST217_1	6CCh
INST218_1	6D4h
INST219_1	6DCh

Copyright © 2025 Texas Instruments Incorporated

Table 11-242. MSS_GPADC_PKT_RAM INST0 Registers (continued)

Acronym	Offset
INST220_1	6E4h
INST221_1	6ECh
INST222_1	6F4h
INST223_1	6FCh
INST224_1	704h
INST225_1	70Ch
INST226_1	714h
INST227_1	71Ch
INST228_1	724h
INST229_1	72Ch
INST230_1	734h
INST231_1	73Ch
INST232_1	744h
INST233_1	74Ch
INST234_1	754h
INST235_1	75Ch
INST236_1	764h
INST237_1	76Ch
INST238_1	774h
INST239_1	77Ch
INST240_1	784h
INST241_1	78Ch
INST242_1	794h
INST243_1	79Ch
INST244_1	7A4h
INST245_1	7ACh
INST246_1	7B4h
INST247_1	7BCh
INST248_1	7C4h
INST249_1	7CCh
INST250_1	7D4h
INST251_1	7DCh
INST252_1	7E4h
INST253_1	7ECh
INST254_1	7F4h
INST255_1	7FCh

Copyright © 2025 Texas Instruments Incorporated

Figure 11-117. INSTN_1 Register

31	30	29	28	27	26	25	24
NU2							NU1
R-0h							R-0h
23	22	21	20	19	18	17	16
CHIRP_BRK	SKIP_SAMPLES						
R/W-0h	R/W-0h						
15	14	13	12	11	10	9	8
COLLECT_SAMPLES							
R/W-0h							
7	6	5	4	3	2	1	0
PARAM							
R/W-0h							

Table 11-243. INSTN_1 Register Field Descriptions

Bit	Field	Type	Reset	Description
31-25	NU2	R	0h	
24	NU1	R	0h	1:Continue tests from the next instruction for the next chirp with the same profile
23	CHIRP_BRK	R/W	0h	
22-16	SKIP_SAMPLES	R/W	0h	Number of GPADC clock cycles to skip before collecting valid samples
15-8	COLLECT_SAMPLES	R/W	0h	Number of GPADC samples to collect
7-0	PARAM	R/W	0h	Parameter(input to one hot encoding) to be passed to analog

Copyright © 2025 Texas Instruments Incorporated

11.1.5.5.2 MSS_GPADC_REG Registers

Table 11-244 lists the MSS_GPADC_REG registers. All register offset addresses not listed in Table 11-244 should be considered as reserved locations and the register contents should not be modified.

Table 11-244. MSS_GPADC_REG Registers

Offset	Acronym	Register Name	Section
0h	REG0	GPADC_ENABLE_MODE	Section 12.1.5.5.2.1
4h	REG1	GPADC_TRIGGER_IFM	Section 12.1.5.5.2.2
8h	REG2	CFG_IFM	Section 12.1.5.5.2.3
Ch	REG3	PARAM_COLLECT_SKIP_IFM	Section 12.1.5.5.2.4
10h	REG4	BASE_ADDR_CP0_1_2_3	Section 12.1.5.5.2.5
14h	REG5	BASE_ADDR_CP4_5_6_7	Section 12.1.5.5.2.6
18h	REG6	BASE_ADDR_CP8_9_10_11	Section 12.1.5.5.2.7
1Ch	REG7	BASE_ADDR_CP12_13_14_15	Section 12.1.5.5.2.8
20h	REG8	GAPADC_CLK_CRTL	Section 12.1.5.5.2.9
24h	REG9	param_not_used_tx_ena1_off	Section 12.1.5.5.2.10
28h	REG10	param_not_used_tx_ena2_off	Section 12.1.5.5.2.11
2Ch	REG11	param_not_used_tx_ena3_off	Section 12.1.5.5.2.12
30h	REG12	SPARE1_WR	Section 12.1.5.5.2.13
34h	REG13	SPARE2_WR	Section 12.1.5.5.2.14
38h	REG14	SUM_IFM	Section 12.1.5.5.2.15
3Ch	REG15	MIN_MAX_IFM	Section 12.1.5.5.2.16
40h	REG16	GPADC_SAMPLES_FRAME	Section 12.1.5.5.2.17
44h	REG17		Section 12.1.5.5.2.18
48h	REG18		Section 12.1.5.5.2.19
4Ch	REG19		Section 12.1.5.5.2.20
50h	REG20		Section 12.1.5.5.2.21
54h	REG21		Section 12.1.5.5.2.22
58h	REG22		Section 12.1.5.5.2.23

Copyright © 2025 Texas Instruments Incorporated

11.1.5.5.2.1 REG0 Register (Offset = 0h) [reset = 0h]

REG0 is shown in Figure 11-118 and described in Table 11-245.

Return to the Table 11-244.

gpadc modes and enable

Figure 11-118. REG0 Register

31	30	29	28	27	26	25	24
NU3							
R-0h							
23	22	21	20	19	18	17	16
NU3							GPADC_DEBUG_MODE_ENABLE
R-0h							R/W-0h
15	14	13	12	11	10	9	8
NU2				GPADC2ADCBUF_PATH_EN			GPADC_FSM_CLK_ENABLE
R-0h				R/W-0h			R/W-0h
7	6	5	4	3	2	1	0
NU1						DCBIST_MODE	
R-0h						R/W-0h	

Table 11-245. REG0 Register Field Descriptions

Bit	Field	Type	Reset	Description
31-17	NU3	R	0h	TI reserved
16	GPADC_DEBUG_MODE_ENABLE	R/W	0h	1:GPADC raw samples will be collected in the Output RAM in IFM mode
15-12	NU2	R	0h	TI reserved
11-9	GPADC2ADCBUF_PATH_EN	R/W	0h	TI reserved
8	GPADC_FSM_CLK_ENABLE	R/W	0h	Enable the clock to gpadc fsm
7-2	NU1	R	0h	TI reserved
1-0	DCBIST_MODE	R/W	0h	0:Disable,1:IFM Mode enable ,2:CTM mode enable

Copyright © 2025 Texas Instruments Incorporated

11.1.5.5.2.2 REG1 Register (Offset = 4h) [reset = 0h]

REG1 is shown in Figure 11-119 and described in Table 11-246.

Return to the Table 11-244.

gpadc start trigger for Inter frame mode

Figure 11-119. REG1 Register

31	30	29	28	27	26	25	24
NU4							GPADC_START_BYP_VAL
R-0h							R/W-0h
23	22	21	20	19	18	17	16
NU3							GPADC_FSM_BYPASS
R-0h							R/W-0h
15	14	13	12	11	10	9	8
NU2							GPADC_INIT
R-0h							0h
7	6	5	4	3	2	1	0
NU1							GPADC_TRIGGER
R-0h							0h

Table 11-246. REG1 Register Field Descriptions

Bit	Field	Type	Reset	Description
31-25	NU4	R	0h	TI reserved
24	GPADC_START_BYP_VAL	R/W	0h	
23-17	NU3	R	0h	TI reserved
16	GPADC_FSM_BYPASS	R/W	0h	1:Bypass gpadc control .When bypassed start = gpadc_start_byp_val config_val = config_value_ifm param_val = param_val_ifm
15-9	NU2	R	0h	TI reserved
8	GPADC_INIT		0h	Resets the FSM and clears the data RAM
7-1	NU1	R	0h	TI reserved
0	GPADC_TRIGGER		0h	Generates a single cycle pulse to trigger the IFM mode

Copyright © 2025 Texas Instruments Incorporated

11.1.5.5.2.3 REG2 Register (Offset = 8h) [reset = 0h]

REG2 is shown in Figure 11-120 and described in Table 11-247.

Return to the Table 11-244.

gpadc config for IFM

Figure 11-120. REG2 Register

31	30	29	28	27	26	25	24	23	22	21	20	19	18	17	16	15	14	13	12	11	10	9	8	7	6	5	4	3	2	1	0
CONFIG_VALUE_IFM																															
R/W-0h																															

Table 11-247. REG2 Register Field Descriptions

Bit	Field	Type	Reset	Description
31-0	CONFIG_VALUE_IFM	R/W	0h	Configuration value to be passed to analog in IFM mode

Copyright © 2025 Texas Instruments Incorporated

11.1.5.5.2.4 REG3 Register (Offset = Ch) [reset = 0h]

REG3 is shown in Figure 11-121 and described in Table 11-248.

Return to the Table 11-244.

gpadc param, skip samples and collect samples for IFM

Figure 11-121. REG3 Register

31	30	29	28	27	26	25	24	23	22	21	20	19	18	17	16
NU									SKIP_SAMPLES_IFM						
R-0h									R/W-0h						
15	14	13	12	11	10	9	8	7	6	5	4	3	2	1	0
COLLECT_SAMPLES_IFM								PARAM_VAL_IFM							
R/W-0h								R/W-0h							

Table 11-248. REG3 Register Field Descriptions

Bit	Field	Type	Reset	Description
31-23	NU	R	0h	
22-16	SKIP_SAMPLES_IFM	R/W	0h	number of GPADC clocks to skip after trigger . Number of samples to skip = skip_samples_ifm[3:0]x(2skip_samples_ifm[6:4])
15-8	COLLECT_SAMPLES_IFM	R/W	0h	number of GPADC readings to collect
7-0	PARAM_VAL_IFM	R/W	0h	Param value to be passed to analog in IFM mode(after one hot encoding)

Copyright © 2025 Texas Instruments Incorporated

11.1.5.5.2.5 REG4 Register (Offset = 10h) [reset = 0h]

REG4 is shown in Figure 11-122 and described in Table 11-249.

Return to the Table 11-244.

Base address for Chirp profile 0 in instruction packet RAM

Figure 11-122. REG4 Register

31	30	29	28	27	26	25	24	23	22	21	20	19	18	17	16
PKT_RAM_BASE_ADDR_CP3								PKT_RAM_BASE_ADDR_CP2							
R/W-0h								R/W-0h							
15	14	13	12	11	10	9	8	7	6	5	4	3	2	1	0
PKT_RAM_BASE_ADDR_CP1								PKT_RAM_BASE_ADDR_CP0							
R/W-0h								R/W-0h							

Table 11-249. REG4 Register Field Descriptions

Bit	Field	Type	Reset	Description
31-24	PKT_RAM_BASE_ADDR_CP3	R/W	0h	TI reserved
23-16	PKT_RAM_BASE_ADDR_CP2	R/W	0h	TI reserved
15-8	PKT_RAM_BASE_ADDR_CP1	R/W	0h	(End-Address + 1) of instruction-ram in CTM mode
7-0	PKT_RAM_BASE_ADDR_CP0	R/W	0h	Start Address of instruction-ram in CTM mode

Copyright © 2025 Texas Instruments Incorporated

11.1.5.5.2.6 REG5 Register (Offset = 14h) [reset = 0h]

REG5 is shown in Figure 11-123 and described in Table 11-250.

Return to the Table 11-244.

Base address for Chirp profile 1 in instruction packet RAM

Figure 11-123. REG5 Register

31	30	29	28	27	26	25	24	23	22	21	20	19	18	17	16
PKT_RAM_BASE_ADDR_CP7								PKT_RAM_BASE_ADDR_CP6							
R/W-0h								R/W-0h							
15	14	13	12	11	10	9	8	7	6	5	4	3	2	1	0
PKT_RAM_BASE_ADDR_CP5								PKT_RAM_BASE_ADDR_CP4							
R/W-0h								R/W-0h							

Table 11-250. REG5 Register Field Descriptions

Bit	Field	Type	Reset	Description
31-24	PKT_RAM_BASE_ADDR_CP7	R/W	0h	TI reserved
23-16	PKT_RAM_BASE_ADDR_CP6	R/W	0h	TI reserved
15-8	PKT_RAM_BASE_ADDR_CP5	R/W	0h	TI reserved
7-0	PKT_RAM_BASE_ADDR_CP4	R/W	0h	TI reserved

Copyright © 2025 Texas Instruments Incorporated

11.1.5.5.2.7 REG6 Register (Offset = 18h) [reset = 0h]

REG6 is shown in Figure 11-124 and described in Table 11-251.

Return to the Table 11-244.

Base address for Chirp profile 2 in instruction packet RAM

Figure 11-124. REG6 Register

31	30	29	28	27	26	25	24	23	22	21	20	19	18	17	16
PKT_RAM_BASE_ADDR_CP11								PKT_RAM_BASE_ADDR_CP10							
R/W-0h								R/W-0h							
15	14	13	12	11	10	9	8	7	6	5	4	3	2	1	0
PKT_RAM_BASE_ADDR_CP9								PKT_RAM_BASE_ADDR_CP8							
R/W-0h								R/W-0h							

Table 11-251. REG6 Register Field Descriptions

Bit	Field	Type	Reset	Description
31-24	PKT_RAM_BASE_ADDR_CP11	R/W	0h	TI reserved
23-16	PKT_RAM_BASE_ADDR_CP10	R/W	0h	TI reserved
15-8	PKT_RAM_BASE_ADDR_CP9	R/W	0h	TI reserved
7-0	PKT_RAM_BASE_ADDR_CP8	R/W	0h	TI reserved

Copyright © 2025 Texas Instruments Incorporated

11.1.5.5.2.8 REG7 Register (Offset = 1Ch) [reset = 0h]

REG7 is shown in Figure 11-125 and described in Table 11-252.

Return to the Table 11-244.

Base address for Chirp profile 3 in instruction packet RAM

Figure 11-125. REG7 Register

31	30	29	28	27	26	25	24	23	22	21	20	19	18	17	16
PKT_RAM_BASE_ADDR_CP15								PKT_RAM_BASE_ADDR_CP14							
R/W-0h								R/W-0h							
15	14	13	12	11	10	9	8	7	6	5	4	3	2	1	0
PKT_RAM_BASE_ADDR_CP13								PKT_RAM_BASE_ADDR_CP12							
R/W-0h								R/W-0h							

Table 11-252. REG7 Register Field Descriptions

Bit	Field	Type	Reset	Description
31-24	PKT_RAM_BASE_ADDR_CP15	R/W	0h	TI reserved
23-16	PKT_RAM_BASE_ADDR_CP14	R/W	0h	TI reserved
15-8	PKT_RAM_BASE_ADDR_CP13	R/W	0h	TI reserved
7-0	PKT_RAM_BASE_ADDR_CP12	R/W	0h	TI reserved

Copyright © 2025 Texas Instruments Incorporated

11.1.5.5.2.9 REG8 Register (Offset = 20h) [reset = 0h]

REG8 is shown in Figure 11-126 and described in Table 11-253.

Return to the Table 11-244.

Figure 11-126. REG8 Register

31	30	29	28	27	26	25	24
NU							
R-0h							
23	22	21	20	19	18	17	16
NU							
R-0h							
15	14	13	12	11	10	9	8
NU							GPADC_CLK_ENABLE
R-0h							R/W-0h
7	6	5	4	3	2	1	0
GPADC_CLK_DIV							
R/W-0h							

Table 11-253. REG8 Register Field Descriptions

Bit	Field	Type	Reset	Description
31-9	NU	R	0h	
8	GPADC_CLK_ENABLE	R/W	0h	TI reserved
7-0	GPADC_CLK_DIV	R/W	0h	TI reserved

Copyright © 2025 Texas Instruments Incorporated

11.1.5.5.2.10 REG9 Register (Offset = 24h) [reset = 0h]

REG9 is shown in Figure 11-127 and described in Table 11-254.

Return to the Table 11-244.

Figure 11-127. REG9 Register

31	30	29	28	27	26	25	24	23	22	21	20	19	18	17	16	15	14	13	12	11	10	9	8	7	6	5	4	3	2	1	0
PARAM_NOT_USED_TX_ENA1_OFF																															
R/W-0h																															

Table 11-254. REG9 Register Field Descriptions

Bit	Field	Type	Reset	Description
31-0	PARAM_NOT_USED_TX_ENA1_OFF	R/W	0h	TI reserved

Copyright © 2025 Texas Instruments Incorporated

11.1.5.5.2.11 REG10 Register (Offset = 28h) [reset = 0h]

REG10 is shown in Figure 11-128 and described in Table 11-255.

Return to the Table 11-244.

Figure 11-128. REG10 Register

31	30	29	28	27	26	25	24	23	22	21	20	19	18	17	16	15	14	13	12	11	10	9	8	7	6	5	4	3	2	1	0
PARAM_NOT_USED_TX_ENA2_OFF																															
R/W-0h																															

Table 11-255. REG10 Register Field Descriptions

Bit	Field	Type	Reset	Description
31-0	PARAM_NOT_USED_TX_ENA2_OFF	R/W	0h	TI reserved

Copyright © 2025 Texas Instruments Incorporated

11.1.5.5.2.12 REG11 Register (Offset = 2Ch) [reset = 0h]

REG11 is shown in Figure 11-129 and described in Table 11-256.

Return to the Table 11-244.

Figure 11-129. REG11 Register

31	30	29	28	27	26	25	24	23	22	21	20	19	18	17	16	15	14	13	12	11	10	9	8	7	6	5	4	3	2	1	0
PARAM_NOT_USED_TX_ENA3_OFF																															
R/W-0h																															

Table 11-256. REG11 Register Field Descriptions

Bit	Field	Type	Reset	Description
31-0	PARAM_NOT_USED_TX_ENA3_OFF	R/W	0h	TI reserved

Copyright © 2025 Texas Instruments Incorporated

11.1.5.5.2.13 REG12 Register (Offset = 30h) [reset = 0h]

REG12 is shown in Figure 11-130 and described in Table 11-257.

Return to the Table 11-244.

Figure 11-130. REG12 Register

31	30	29	28	27	26	25	24
DRAM_REPAIRED_BIT							
R-0h							
23	22	21	20	19	18	17	16
DRAM_ECC_ERR_ADDR							
R-0h							
15	14	13	12	11	10	9	8
NU2							DRAM_ECC_ERR_CLR
R-0h							0h
7	6	5	4	3	2	1	0
NU1							DRAM_ECC_ENABLE
R-0h							R/W-0h

Table 11-257. REG12 Register Field Descriptions

Bit	Field	Type	Reset	Description
31-24	DRAM_REPAIRED_BIT	R	0h	TI reserved
23-16	DRAM_ECC_ERR_ADDR	R	0h	TI reserved
15-9	NU2	R	0h	TI reserved
8	DRAM_ECC_ERR_CLR		0h	TI reserved
7-1	NU1	R	0h	TI reserved
0	DRAM_ECC_ENABLE	R/W	0h	

Copyright © 2025 Texas Instruments Incorporated

11.1.5.5.2.14 REG13 Register (Offset = 34h) [reset = 0h]

REG13 is shown in Figure 11-131 and described in Table 11-258.

Return to the Table 11-244.

Figure 11-131. REG13 Register

31	30	29	28	27	26	25	24	23	22	21	20	19	18	17	16	15	14	13	12	11	10	9	8	7	6	5	4	3	2	1	0
SPARE_WR2																															
R/W-0h																															

Table 11-258. REG13 Register Field Descriptions

Bit	Field	Type	Reset	Description
31-0	SPARE_WR2	R/W	0h	TI reserved

Copyright © 2025 Texas Instruments Incorporated

11.1.5.5.2.15 REG14 Register (Offset = 38h) [reset = 0h]

REG14 is shown in Figure 11-132 and described in Table 11-259.

Return to the Table 11-244.

Sum of GP ADC readings

Figure 11-132. REG14 Register

31	30	29	28	27	26	25	24	23	22	21	20	19	18	17	16	15	14	13	12	11	10	9	8	7	6	5	4	3	2	1	0
NU												SUM_IFM																			
R-0h												R-0h																			

Table 11-259. REG14 Register Field Descriptions

Bit	Field	Type	Reset	Description
31-20	NU	R	0h	TI reserved
19-0	SUM_IFM	R	0h	Sum of GP ADC readings

Copyright © 2025 Texas Instruments Incorporated

11.1.5.5.2.16 REG15 Register (Offset = 3Ch) [reset = 0h]

REG15 is shown in Figure 11-133 and described in Table 11-260.

Return to the Table 11-244.

Min and Max of GP ADC readings

Figure 11-133. REG15 Register

31	30	29	28	27	26	25	24	23	22	21	20	19	18	17	16	15	14	13	12	11	10	9	8	7	6	5	4	3	2	1	0
NU2						MAX_GPADC										NU1						MIN_GPADC									
R-0h						R-0h										R-0h						R-0h									

Table 11-260. REG15 Register Field Descriptions

Bit	Field	Type	Reset	Description
31-26	NU2	R	0h	TI reserved
25-16	MAX_GPADC	R	0h	Max of GPADC readings
15-10	NU1	R	0h	TI reserved
9-0	MIN_GPADC	R	0h	Min of GPADC readings

Copyright © 2025 Texas Instruments Incorporated

11.1.5.5.2.17 REG16 Register (Offset = 40h) [reset = 0h]

REG16 is shown in Figure 11-134 and described in Table 11-261.

Return to the Table 11-244.

Figure 11-134. REG16 Register

31	30	29	28	27	26	25	24
NU							
R-0h							
23	22	21	20	19	18	17	16
NU							
R-0h							
15	14	13	12	11	10	9	8
NU							
R-0h							
7	6	5	4	3	2	1	0
NU							GPADC_MEM_INIT_DONE_STAT
R-0h							R-0h

Table 11-261. REG16 Register Field Descriptions

Bit	Field	Type	Reset	Description
31-1	NU	R	0h	TI reserved
0	GPADC_MEM_INIT_DONE_STAT	R	0h	Status for Data Mem init done.Used for FW polling .Will read '0' when init process is under progress

Copyright © 2025 Texas Instruments Incorporated

11.1.5.5.2.18 REG17 Register (Offset = 44h) [reset = 0h]

REG17 is shown in Figure 11-135 and described in Table 11-262.

Return to the Table 11-244.

Figure 11-135. REG17 Register

31	30	29	28	27	26	25	24
NU							
R-0h							
23	22	21	20	19	18	17	16
NU							
R-0h							
15	14	13	12	11	10	9	8
NU							
R-0h							
7	6	5	4	3	2	1	0
NU							GPADC_IFM_DONE_STATUS
R-0h							R-0h

Table 11-262. REG17 Register Field Descriptions

Bit	Field	Type	Reset	Description
31-1	NU	R	0h	TI reserved
0	GPADC_IFM_DONE_STATUS	R	0h	Test completion status in IFM mode.Used for FW polling

Copyright © 2025 Texas Instruments Incorporated

11.1.5.5.2.19 REG18 Register (Offset = 48h) [reset = 0h]

REG18 is shown in Figure 11-136 and described in Table 11-263.

Return to the Table 11-244.

Figure 11-136. REG18 Register

31	30	29	28	27	26	25	24
NU							
R-0h							
23	22	21	20	19	18	17	16
NU							
R-0h							
15	14	13	12	11	10	9	8
NU							
R-0h							
7	6	5	4	3	2	1	0
NU							GPADC_IFM_DONE_CLR
R-0h							0h

Table 11-263. REG18 Register Field Descriptions

Bit	Field	Type	Reset	Description
31-1	NU	R	0h	TI reserved
0	GPADC_IFM_DONE_CLR		0h	Clear "ifm_done_status"

Copyright © 2025 Texas Instruments Incorporated

11.1.5.5.2.20 REG19 Register (Offset = 4Ch) [reset = 0h]

REG19 is shown in Figure 11-137 and described in Table 11-264.

Return to the Table 11-244.

Figure 11-137. REG19 Register

31	30	29	28	27	26	25	24	23	22	21	20	19	18	17	16
NU															
R-0h															
15	14	13	12	11	10	9	8	7	6	5	4	3	2	1	0
GPADC_SAMPLES_FRAME															
R-0h															

Table 11-264. REG19 Register Field Descriptions

Bit	Field	Type	Reset	Description
31-16	NU	R	0h	TI reserved
15-0	GPADC_SAMPLES_FRAME	R	0h	Total number of GPADC samples collected in a frame

Copyright © 2025 Texas Instruments Incorporated

11.1.5.5.2.21 REG20 Register (Offset = 50h) [reset = 0h]

REG20 is shown in Figure 11-138 and described in Table 11-265.

Return to the Table 11-244.

Figure 11-138. REG20 Register

31	30	29	28	27	26	25	24	23	22	21	20	19	18	17	16	15	14	13	12	11	10	9	8	7	6	5	4	3	2	1	0
SPARE_RD1																															
R-0h																															

Table 11-265. REG20 Register Field Descriptions

Bit	Field	Type	Reset	Description
31-0	SPARE_RD1	R	0h	TI reserved

Copyright © 2025 Texas Instruments Incorporated

11.1.5.5.2.22 REG21 Register (Offset = 54h) [reset = 0h]

REG21 is shown in Figure 11-139 and described in Table 11-266.

Return to the Table 11-244.

Figure 11-139. REG21 Register

31	30	29	28	27	26	25	24	23	22	21	20	19	18	17	16	15	14	13	12	11	10	9	8	7	6	5	4	3	2	1	0
SPARE_RD2																															
R-0h																															

Table 11-266. REG21 Register Field Descriptions

Bit	Field	Type	Reset	Description
31-0	SPARE_RD2	R	0h	TI reserved

Copyright © 2025 Texas Instruments Incorporated

11.1.5.5.2.23 REG22 Register (Offset = 58h) [reset = 0h]

REG22 is shown in Figure 11-140 and described in Table 11-267.

Return to the Table 11-244.

Figure 11-140. REG22 Register

31	30	29	28	27	26	25	24	23	22	21	20	19	18	17	16	15	14	13	12	11	10	9	8	7	6	5	4	3	2	1	0
SPARE_WR1																															
R/W-0h																															

Table 11-267. REG22 Register Field Descriptions

Bit	Field	Type	Reset	Description
31-0	SPARE_WR1	R/W	0h	TI reserved

11.2 High-speed Serial Interfaces

11.2.1 Ethernet SubSystem (MCU_CPSW0)

This chapter describes the Gigabit Ethernet MAC (Media Access Controller). For conceptual purposes the below documentation refers to this MAC as being a two port CPSW with port 0 being the CPPI DMA host port and port 1 being the Ethernet port.

11.2.1.1 MCU_CPSW0 Overview 2451
11.2.1.2 MCU_CPSW0 Environment 2455
11.2.1.3 MCU_CPSW0 Integration 2458
11.2.1.4 MCU_CPSW0 Functional Description 2460
11.2.1.5 MCU_CPSW0 Programming Guide 2543
11.2.1.6 MSS_CPSW Registers 2545

Copyright © 2025 Texas Instruments Incorporated

11.2.1.1 MCU_CPSW0 Overview

The two-port Ethernet MAC (MCU_CPSW0) subsystem provides Ethernet packet communication for the device and is configured in a similar manner as a two-port Ethernet switch. MCU_CPSW0 features the Reduced Gigabit Media Independent Interface (RGMII), Reduced Media Independent Interface (RMII), and the Management Data Input/Output (MDIO) interface for physical layer device (PHY) management.

The device has integrated two-port Ethernet Switch subsystem into device MCU domain named MCU_CPSW0.

Figure 11-141 shows the MCU_CPSW0 module overview.

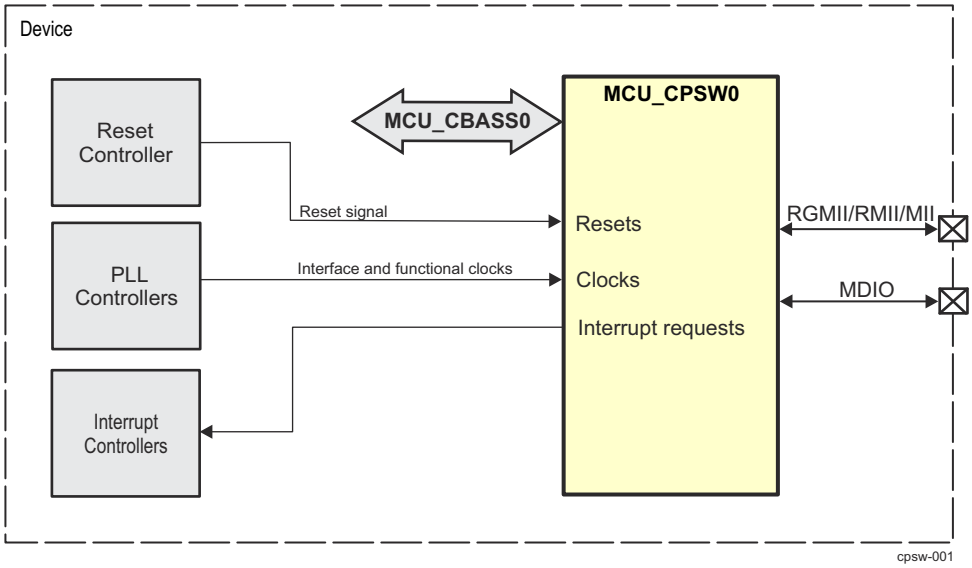

Figure 11-141. MCU_CPSW0 Overview

11.2.1.1.1 MCU_CPSW0 Features

The MCU_CPSW0 subsystem provides the following features:

- One Ethernet port with selectable MII, RMII and RGMII interfaces (port 1).
- One CPDMA CPPI DMA Host Interface (Port 0)
- Synchronous 10 Mbit/100 Mbit/1 GBit operation
- Flexible logical FIFO-based packet buffer structure
- Eight priority level Quality Of Service (QOS) support (802.1p)
- Support for Audio/Video Bridging (P802.1Qav/D6.0) (**C**redit **B**ased **S**haper)
- Support for IEEE 1588 Clock Synchronization (2008 Annex D, Annex E and Annex F)
  - Timestamp module capable of time stamping external timesync events like Pulse-Per-Second and also generating Pulse-Per-Second outputs
  - CPTS module that supports time stamping for IEEE1588 with support for 4 hardware push events and generation of compare output pulses
- DSCP Priority Mapping (IPv4 and IPv6)
- Energy Efficient Ethernet (EEE) support (802.3az)
- Flow Control (802.3x) Support
- Non Blocking switch fabric
- Time Sensitive Network Support
  - IEEE 802.1Qbv/D2.2 Enhancements for Scheduled Traffic
- Address Lookup Engine (ALE)
  - Configurable number of addresses plus VLANs
  - Wire rate lookup
  - Host controlled time-based aging and/or auto-aging
  - Spanning tree support

Copyright © 2025 Texas Instruments Incorporated

  - L2 address lock and L2 filtering support
  - MAC authentication (802.1x)
  - Receive-based or destination-based Multicast and Broadcast rate limits
  - MAC address blocking
  - Source port locking
  - OUI (Vendor ID) host accept/deny feature
  - Configurable number of classifier/policers
  - VLAN support
    - 802.1Q compliant
      - Auto add port VLAN for untagged frames on ingress
      - Auto VLAN removal on egress and with pad to minimum frame size
- EtherStats and 802.3Stats Remote network Monitoring (RMON) statistics gathering (per port)
- Ethernet or Castignoli CRC selectable on Ethernet egress
- Digital Loopback supported (Ethernet egress to Ethernet ingress)
- OAM Loopback supported (FIFO Loopback - port ingress to egress including host port)
- CPSGMII Loopback Modes (Ethernet egress to Ethernet ingress)
- Maximum frame size of 2024 bytes (including VLAN)
- Management Data Input/Output (MDIO) module for PHY Management with Clause 45 support
- Programmable interrupt control with selected interrupt pacing
- Emulation support
- Full duplex mode supported in 10/100 Mbps. Half-duplex mode supported only in 10/100 Mbps modes only.
- RAM Error Detection and Correction (SECDED)
- InterVLAN Routing is supported - 4 routes per egress port.
- Support for Audio/Video Bridging (P802.1Qav/D6.0) (Credit Based Shaper - CBS)
- Automotive Security Features
  - VLANs can be configured to not allow fragmented IPv4 frames (that is, fragmented IPv4 traffic)
  - VLANs can be configured to only allow up to four different IPv4 Protocols or IPv6 Next Header values
  - Drop invalid source addresses, that is drop Source Addresses with bit 40 set (Multicast/Broadcast indicator on Destination Addresses)
  - Drop frames that the IEEE802.3 length is not contained within the frame. (Ether Types 0-1500)
  - Any source address can be secured to a port dropping any attempts from other ports to masquerade as a service
  - Any source or destination address can be blocked
  - Per port or per VLAN ingress checking, dropping traffic from non-member ports
  - Classification, policing on L2 and L3 information

11.2.1.1.2 MCU_CPSW0 Not Supported Features

The following MCU_CPSW0 features are not supported:

- GMII Mode
- XGMII Mode
- SGMII Mode
- QSGMII Mode
- Checksum Offload
- ECC on ALE RAM is not necessary because how RAM is implemented in the device
- Castignoli
- Intersperced Express Traffic (IET)
- MACSEC
- Synchronous Ethernet
- Software reset
- Rate-limiting is not supported in half-duplex mode
- Dual VLAN switch operations are not supported
- RGMII Internal Delay Mode is not configurable
- Priority based flow control is not supported.

Copyright © 2025 Texas Instruments Incorporated

- InterVLAN routed packets will be dropped if the FIFO room is insufficient regardless of receive 803.3x flow control.

11.2.1.1.3 Terminology

Copyright © 2025 Texas Instruments Incorporated

Terminology:

AVB	Audio Video Bridging
AVBTP	Audio Video Bridging Trasport Protocol
BMCA	Best Master Clock Algorithm
CFI	Canonical Format Indicator
CPPI	Communications Port Programming Interface
DLR	Device Level Ring
DSCP	Differentiated Services Code Point
EEE	Energy Efficient Ethernet
EMAC	Ethernet Media Access Control
EOP	End of Packet
EOQ	End of Queue
IPG	Inter-Packet Gap
LPI	Low Power Indicator
MDIO	Management Data Input/Output
MOF	Middle of Frame
OUI	Organizationally Unique Identifier
PTP	Precision Time Protocol
RMON	Remote Monitoring
RTCP	RTP Control Protocol
RTP	Real-time Transport Protocol
SCR	Switched Central Resource
SRP	Stream Reservation Protocol
TOS	Type of Service
VLAN	Virtual Local Area Network
CPSW_2G	CPSW two port

Copyright © 2025 Texas Instruments Incorporated

11.2.1.2 MCU_CPSW0 Environment

11.2.1.2.1 MCU_CPSW0 RMII Interface

Figure 11-142 shows a device with integrated RMII and MDIO interface connection in a typical system. The individual MCU_CPSW0 and MDIO signals for the RMII interface are summarized in Table 11-268.

For more information, refer to either the IEEE 802.3 standard or ISO/IEC 8802-3:2000(E).

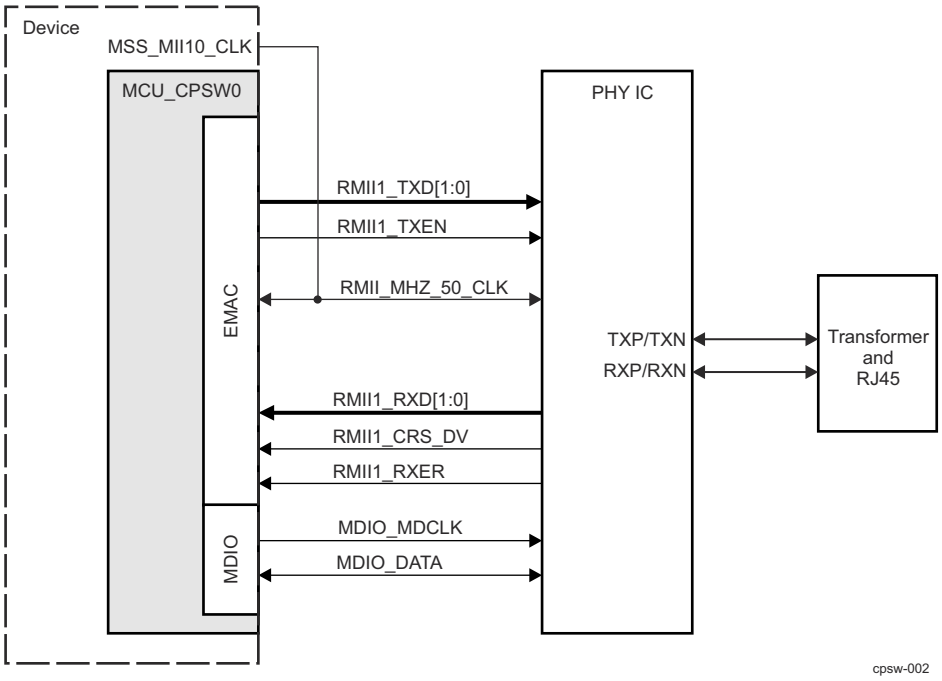

Figure 11-142. RMII Interface Typical Application

Table 11-268. RMII I/O Description

Signal	Device Pin	I/O[1]	Description
RMII_TXD[1:0]	MCU_RMII_TXD[1:0]	O	Transmit data. The transmit data pins are a collection of 2 bits of data. TXD0 is the least-significant bit (LSB). The signals are synchronized by RMII_MHZ_50_CLK and valid only when RMII_TXEN is asserted.
RMII_TXEN	MCU_RMII_TX_EN	O	RMII transmit enable. The transmit enable signal indicates that the MCU_RMII_TXD pins are generating data for use by the PHY. RMII_TXEN is synchronous to RMII_MHZ_50_CLK.
RMII_MHZ_50_CLK	MCU_RMII_REF_CLK	I	RMII 50MHz reference clock. The reference clock is used to synchronize all RMII signals. RMII_MHZ_50_CLK must be continuous and fixed at 50 MHz. This bit controls the clock source MSS_CTRL::CPSW_CONTROL:: CPSW_CONTROL_RMII_REF_CLK_OE_N
RMII_RXD[1:0]	MCU_RMII_RXD[1:0]	I	Receive data. The receive data pins are a collection of 2 bits of data. RXD0 is the least-significant bit (LSB). The signals are synchronized by RMII_MHZ_50_CLK and valid only when RMII_CRS_DV is asserted and RMII_RXER is de-asserted.
RMII_CRS_DV	MCU_RMII_CRS_DV	I	Carrier sense/receive data valid. Multiplexed signal between carrier sense and receive data valid.
RMII_RXER	MCU_RMII_RX_ER	I	Receive error. The receive error signal is asserted to indicate that an error was detected in the received frame.
MDIO_MDCLK	MCU_MDIO_CLK	O	Management data clock (MDIO_MDCLK). The MDIO data clock is sourced by the MDIO module on the system. It is used to synchronize MDIO data access operations done on the MCU_MDIO0_DATA pin.

Copyright © 2025 Texas Instruments Incorporated

Table 11-268. RMII I/O Description (continued)

Signal	Device Pin	I/O(1)	Description
MDIO_DATA	MCU_MDIO_DATA	I/O	MDIO data pin drives PHY management data into and out of the PHY by way of an access frame consisting of start of frame, read/write indication, PHY address, register address, and data bit cycles. The MCU_MDIO0_DATA pin acts as an output for all but the data bit cycles at which time it is an input for read operations.

(1) I = Input; O = Output

11.2.1.2.2 MCU_CPSW0 RGMII Interface

Figure 11-143 shows a device with integrated RGMII and MDIO interface connection in a typical system. The individual MCU_CPSW0 and MDIO signals for the RGMII interface are summarized in Table 11-269.

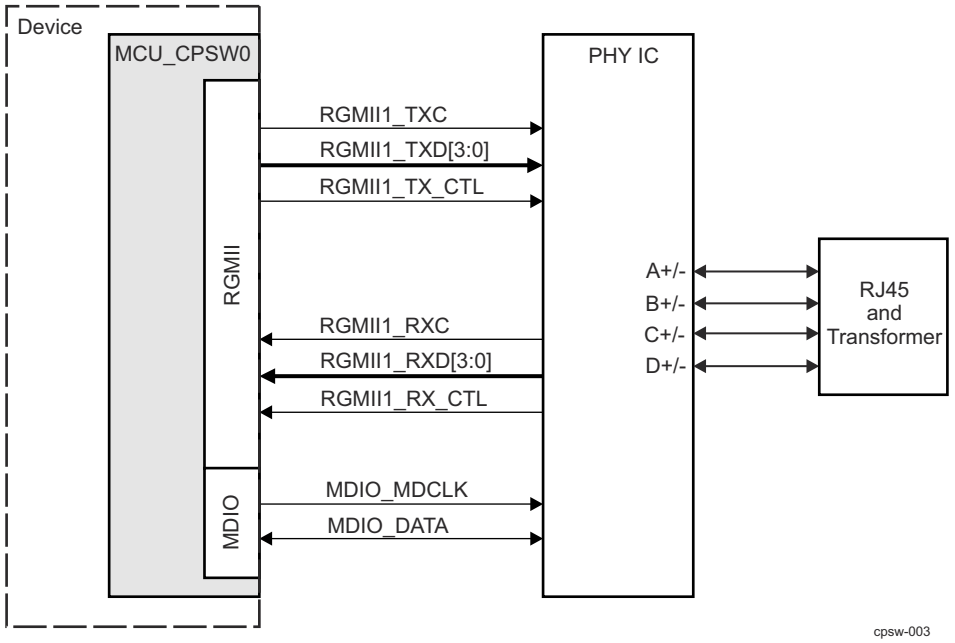

Figure 11-143. RGMII Interface Typical Application

Table 11-269. RGMII I/O Description

Signal	Device Pin(s)	I/O(1)	Description
RGMII_TXD[3:0]	MCU_RGMII_TD[3:0]	O	The transmit data pins are a collection of 4 bits of data. TD0 is the least-significant bit (LSB). The signals are valid only when RGMII_TX_CTL is asserted.
RGMII_TX_CTL	MCU_RGMII_TX_CTL	O	Transmit Control/enable. The transmit enable signal indicates that the TD pins are generating data for use by the PHY.
RGMII_TXC	MCU_RGMII_TXC	O	The transmit reference clock. The clock is 2.5 MHz at 10 Mbps operation, 25 MHz at 100 Mbps operation, and 125 MHz at 1000 Mbps* of operation.
RGMII_RXD[3:0]	MCU_RGMII_RD[3:0]	I	The receive data pins are a collection of 4 bits of data. RD0 is the least-significant bit (LSB). The signals are valid only when RGMII_RX_CTL is asserted
RGMII_RX_CTL	MCU_RGMII_RX_CTL	I	The receive data valid/control signal indicates that the RD pins are nibble data for use by the EMAC.
RGMII_RXC	MCU_RGMII_RXC	I	The receive clock is a continuous clock that provides the timing reference for receive operations. The clock is generated by the PHY and is 2.5 MHz at 10 Mbps operation, 25 MHz at 100 Mbps operation, 125 MHz at 1000 Mbps* of operation.

Copyright © 2025 Texas Instruments Incorporated

Table 11-269. RGMII I/O Description (continued)

Signal	Device Pin(s)	I/O[1]	Description
MDIO_MDCLK	MCU_MDIO_CLK	O	Management data clock (MDIO_MDCLK). The MDIO data clock is sourced by the MDIO module on the system. It is used to synchronize MDIO data access operations done on the MCU_MDIO0_DATA pin.
MDIO_DATA	MCU_MDIO_DATA	I/O	The MCU_MDIO0_DATA pin drives PHY management data into and out of the PHY by way of an access frame consisting of start of frame, read/write indication, PHY address, register address, and data bit cycles. The MCU_MDIO0_DATA pin acts as an output for all but the data bit cycles at which time it is an input for read operations.

(1) I = Input; O = Output

Note

The Control Module registers assign the specific function to the device pads. For more information on Control Module settings, see , Pad Configuration Registers in *Control Module (CTRL_MMR)* and the device-specific Datasheet.

Copyright © 2025 Texas Instruments Incorporated

11.2.1.3 MCU_CPSW0 Integration

Figure 11-144 shows the integration of the MCU_CPSW0 module in the device.

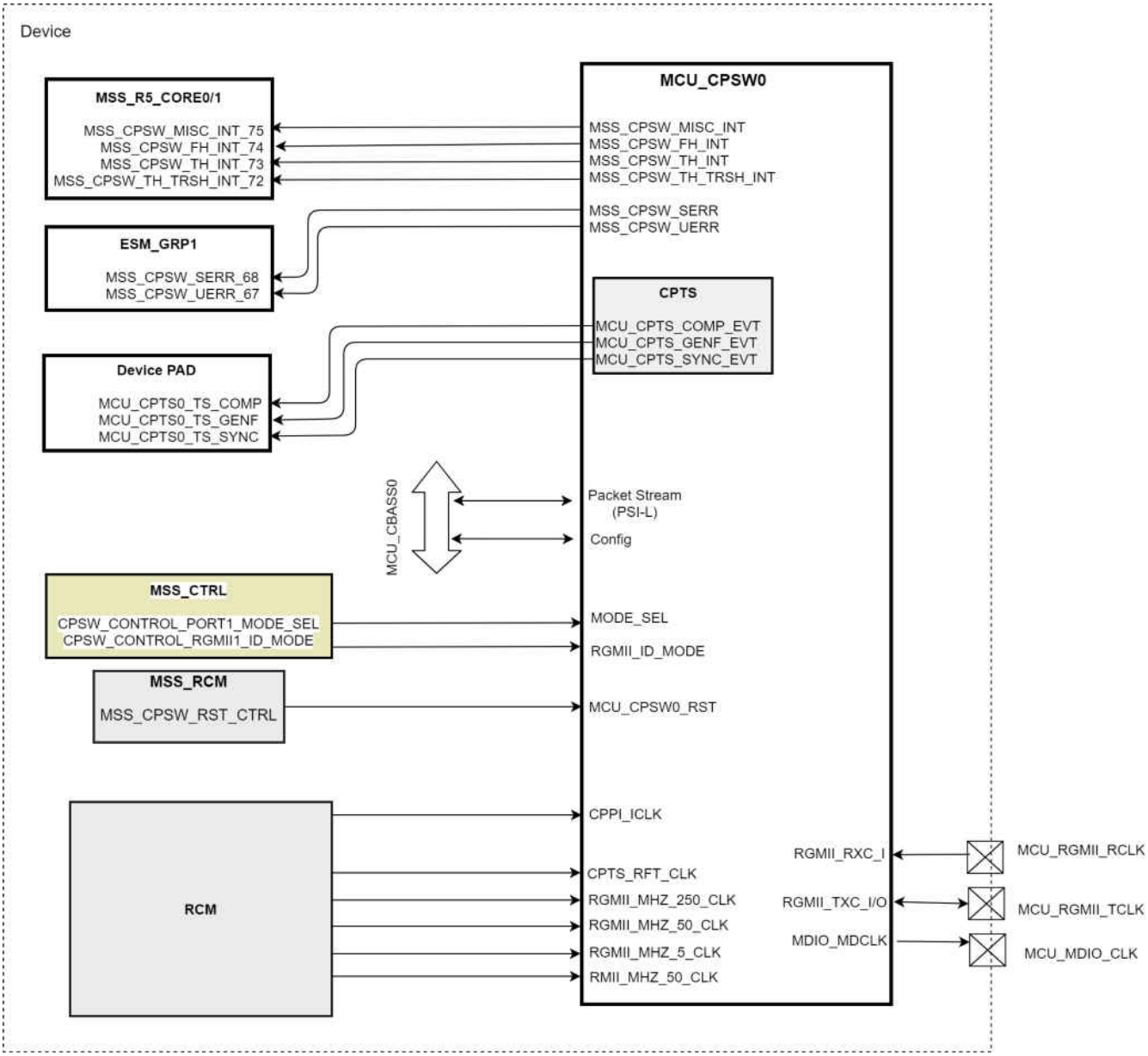

Figure 11-144. MCU_CPSW0 Integration

Below Tables summarize the integration of the MCU_CPSW0 module in the device.

Table 11-270. MCU_CPSW0 Clocks and Resets

Clocks			
Module Instance	**Module Clock Input**	**Reference/Source**	**Description**
MCU_CPSW0	CPPI_CLK	MSS_RCM::CPSW_CLK	CPPI packet streaming interface clock. Main clock for MCU_CPSW0.
	CPTS_RFT_CLK	MSS_RCM::MSS_CPTS_CLK	Time sync Reference Clock 400/250/divided
	RGMII_MHZ_5_CLK	MSS_RCM::MSS_MII10_CLK	5-MHz RGMII reference clock.
	RGMII_MHZ_50_CLK	MSS_RCM::MSS_MII100_CLK	50-MHz RGMII reference clock.

Copyright © 2025 Texas Instruments Incorporated

Table 11-270. MCU_CPSW0 Clocks and Resets (continued)

RGMII_MHZ_250_CLK	MSS_RCM::MSS_RGMII_CLK	250-MHz RGMII reference clock.
RMII_MHZ_50_CLK	MSS_RCM::MSS_MII100_CLK	50-MHz RMII reference clock.

Resets			
Module Instance	**Module Reset Input**	**Reference/Source**	**Description**
MCU_CPSW0	MCU_CPSW0_RST	MCSS_RCM::MSS_CPSW_RST_CTRL	IP Reset

Table 11-271. MCU_CPSW0 Hardware Requests

Interrupt Requests				
Module Instance	**Module Interrupt Signal**	**Destination Interrupt Input**	**Description**	**Type**
MCU_CPSW0	MCU_CPSW_STAT_PEND	MSS_CPSW_MISC_INT_75	MCU_CPSW0 statistic pending interrupt 0	Pulse
	MCU_CPSW_EVNT_PEND	MSS_CPSW_MISC_INT_75	MCU_CPSW0 event pending interrupt	Pulse
	MCU_CPSW_MDIO_INTR	MSS_CPSW_MISC_INT_75	MCU_CPSW0 MDIO interrupt	Pulse
	MCU_CPSW_THost_INT	MSS_CPSW_TH_INT_73	MCU_CPSW0 T-host interrupt	Pulse
	MCU_CPSW_FHost_INT	MSS_CPSW_FH_INT_74	MCU_CPSW0 F-host interrupt	Pulse
	MCU_CPSW_TH_TRSH_INT	MSS_CPSW_TH_TRSH_INT_72	MCU_CPSW0 TH-threshold interrupt	Pulse
	MCU_CPSW_ECC_SEC_INT	MCU_ESM_EVT_68	MCU_CPSW0 SEC ECC error interrupt	Pulse
	MCU_CPSW_ECC_DED_INT	MCU_ESM_EVT_67	MCU_CPSW0 SEC DED error interrupt	Pulse
Time Sync and Compare Events				
Module Instance	**Module Event**	**Device Pin**	**Description**	**Type**
MCU_CPSW0	MCU_CPSW_COMP_EVT	MCU_CPTS0_TS_COMP	MCU_CPSW0 compare event interrupt	Edge
	MCU_CPSW_GENF_EVT	MCU_CPTS0_TS_GENF	MCU_CPSW0 CPTS generator function event interrupt	Edge
	MCU_CPSW_SYNC_EVT	MCU_CPTS0_TS_SYNC	MCU_CPSW0 CPTS sync event interrupt	Edge

Note

For more information about interrupts, see *Local Interrupt Controller*.

For more information on the interconnects, see *System Interconnect*.

For more information on the power, reset and clock management, see the corresponding sections within *Device Configuration*.

For more information on the device interrupt controllers, see *Interrupt Controllers*.

Copyright © 2025 Texas Instruments Incorporated

11.2.1.4 MCU_CPSW0 Functional Description

The two-port switch Ethernet subsystem modules (CPSW) are compliant to the IEEE Std 802.3 Specification. CPSW top level functional block diagram is shown in Figure 11-145.

11.2.1.4.1 Functional Block Diagram

The two-port Ethernet subsystem consists of:

- CPSW_2G
- One RGMII interface module
- One RMII interface module
- One Host Port 0 CPPI Packet Streaming Interface
- CPSW subsystem control registers (REG)
- One MDIO interface module
- One Interrupt Controller module

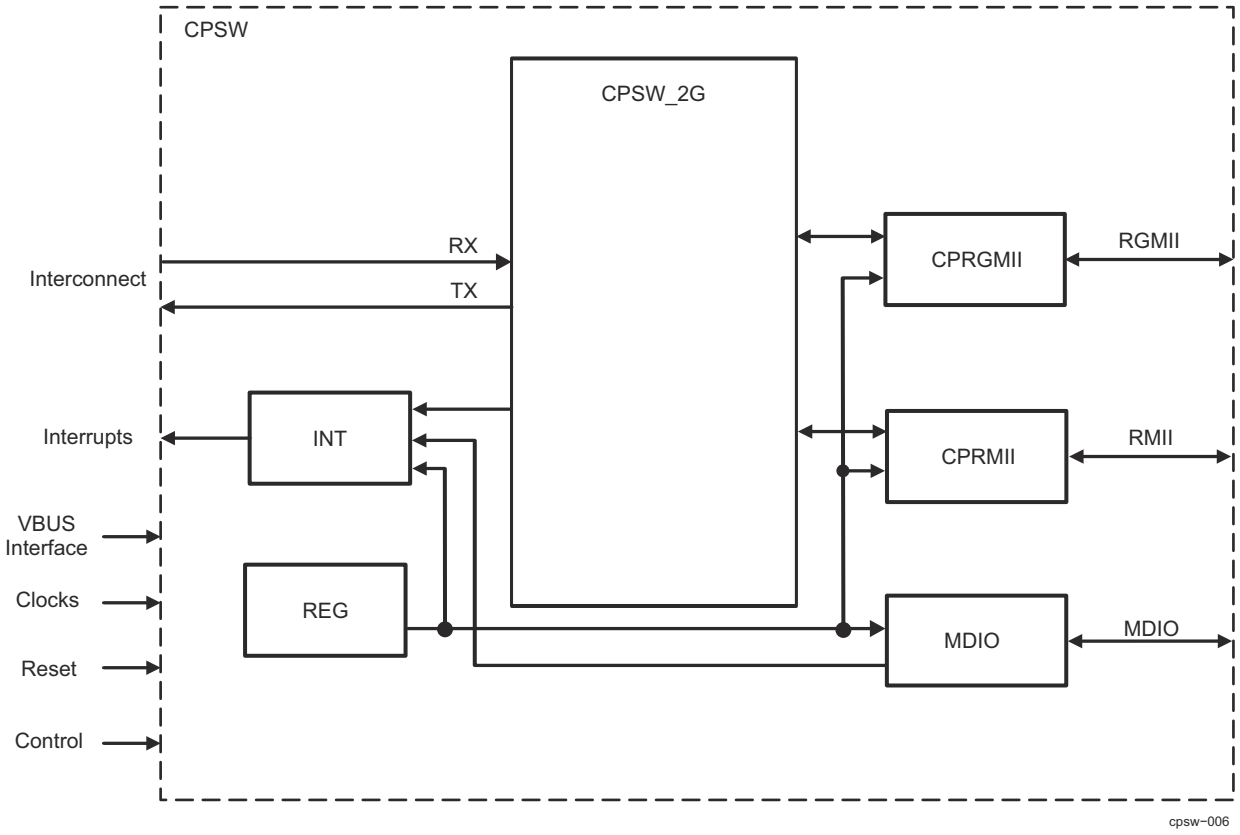

Figure 11-145. CPSW Top Level Block Diagram

11.2.1.4.2 CPSW Ports

The Ethernet Subsystem has two ports. Port 0 is the Host port (internal to the Subsystem). Port 1 is the external port connected to RGMII, or RMII interfaces as per the interface selected.

Naming conventions followed in this chapter:

- Port0 is referred to the CPPI CPDMA Host Port
- Port1 is referred to the interfaces RGMII/RMII

11.2.1.4.2.1 Ethernet Port Operation

Copyright © 2025 Texas Instruments Incorporated

11.2.1.4.2.1.1 Interface Mode Selection

The two-port switch (CPSW) Ethernet Subsystem has one 10/100/1000 Ethernet port with selectable MII, RMII, and RGMII interfaces. These interfaces can be enabled by **MSS_CTRL:CPSW_CONTROL:CPSW_CONTROL_PORT1_MODE_SEL**

For specific interface mode further features is selected by configuring the Ethernet bits (EXT_EN, GIG, FULLDUPLEX, IFCTL_A) in the **PN_MAC_CONTROL** register.

See the device-specific Datasheet for configuring the pin mux mode as per the interface selected.

CPSW_CONTROL_PORT1_MODE_SEL	Link Type
00	GMII/MII
01	RMII
10	RGMII

11.2.1.4.2.1.2 RMII Operation

The **IFCTL_A** bit determines the RMII link speed (0=10mbps, 1=100mbps). The **FULLDUPLEX** bit controls RMII duplexity. The **IFCTL_B** is not used.

11.2.1.4.2.1.3 RGMII Operation

Each port RGMII interface can operate in a forced mode or an in-band mode as determined by the **EXT_EN** bit. Forced mode is with **EXT_EN** cleared. In-band mode is with **EXT_EN** set.

11.2.1.4.2.1.3.1 RGMII In-Band Operation

A port CPRGMII is operating in the in-band mode of operation when the **EXT_EN** is set. The link status, duplexity, and speed are determined from the RGMII input data stream as defined in the RGMII specification and can be read in the **SS_RGMII1_STATUS** register. The link speed is indicated as shown in Table 11-272.

Table 11-272. RGMII Link Speed

SPEED(1:0)	Link Speed
00	10 Mbs mode
01	100 Mbs mode
10	1000 Mbs mode
11	reserved

11.2.1.4.2.1.3.2 RGMII Forced Mode Operation

A RGMII is operating in the forced mode of operation when **EXT_EN** is cleared. In the forced mode of operation, the in-band data is ignored if present. The link status is forced set, the duplexity is set by the **FULLDUPLEX** bit, and the speed is set by the **GIG** bit. If the **GIG** bit is set, then operation is gigabit mode (**SS_RGMII1_STATUS: SPEED(1:0)** = 10). If the **GIG** bit is cleared, then operation is 100mbps mode (**SPEED(1:0)** = 01). 10mbps is not supported when operating in the forced mode.

11.2.1.4.3 Clocking

11.2.1.4.3.1 Subsystem Clocking

CPSW clocking summary is shown in Section 11.2.1.3, *CPSW Integration*.

11.2.1.4.3.2 Interface Clocking

Data is transmitted and received with respect to the reference clocks of the interface pins.

11.2.1.4.3.2.1 RGMII Interface Clocking

RGMII_RXC, RGMII_TXC frequencies are:

- 2.5 MHz at 10 Mbps

Copyright © 2025 Texas Instruments Incorporated

- 25 MHz at 100 Mbps
- 125 MHz at 1000 Mbps

11.2.1.4.3.2.2 RMII Interface Clocking

RMII interface clock RMII_50MHZ_CLK frequency is:

- 50 MHz at 10 Mbps
- 50 MHz at 100 Mbps

MCU_RMII1_REFCLK pin or internal RGMII_MHZ_50_CLK clock (default clock) can be selected through rmii_ref_clk_oe_n in CSPW_CONTROL, and one of these clocks can be used as the clock source for RMII interface. For more details on RMII clocking, please see Section 11.2.1.3, *CPSW Integration*.

CTRLMMR_MCU_CLKOUT0_CTRL[4]CLK_EN and CTRLMMR_MCU_CLKOUT0_CTRL[0]CLK_SEL bits are used to enable and select the clock source for MCU_CLKOUT pin.

11.2.1.4.3.2.3 MDIO Clocking

The MDIO clock is based on a divide-down of the interface (CPPI_ICLK) clock. The application software or driver must control the divide-down value.

See the CPSW_MDIO_CONTROL_REG register for configuring the Clock Divider ([15-0]CLKDIV) value.

11.2.1.4.4 Interrupt Functionality

Table 11-273. Interrupt Functionality

Interrupt	Description
MSS_CPSW_FH_INT	FHost (from host to Ethernet) interrupt
MSS_CPSW_TH_INT	THost (from Ethernet to host) interrupt
MSS_CPSW_TH_TRSH_INT	THost (from Ethernet to host) Threshold interrupt
MSS_CPSW_MISC_INT	Miscellaneous interrupt
MSS_CPSW_SERR	ECC SEC interrupt – output from CPSW ECC module. This interrupt is also included in the **MSS_CPSW_MISC_INT** if enabled or this interrupt can be used separately.
MSS_CPSW_UERR	ECC DED interrupt – output from CPSW ECC module. This interrupt is also included in the **MSS_CPSW_MISC_INT** if enabled or this interrupt can be used separately.

11.2.1.4.4.1 MSS_CPSW_TH_TRSH_INT Interrupt Description

The **MSS_CPSW_TH_TRSH_INT** interrupts are each an immediate (non-paced) pulse interrupt selected from the CPSW_2G **TH_THRESH_PEND[7:0]** interrupts. The THost threshold pending interrupt(s) is selected by setting one or more bits in the **SS_TH_THRESH_PULSE_EN_REG[7:0]** register. The masked interrupt status can be read in the **SS_TH_THRESH_PULSE_STATUS_REG[7:0]** register. Upon reception of an interrupt, software should perform the following:

- Read the SS_TH_THRESH_PULSE_STATUS_REG[7:0] register to determine which channel(s) caused the interrupt.
- Process THost packets in order to add more buffers to any channel that is below the threshold value.
- Write the CPSW_2G completion pointer(s) to acknowledge the CPDMA interrupt.
- Write 0x0 to the CPDMA_EOI_VECTOR register in the CPSW_2G slave address space to acknowledge the subsystem interrupt.

11.2.1.4.4.2 MSS_CPSW_TH_INT Interrupt Description

The **MSS_CPSW_TH_INT**interrupts are each a paced pulse interrupt selected from the CPSW_2G **TH_PEND[7:0]** interrupts. The THost pending interrupt(s) is selected by setting one or more bits in the **SS_TH_PULSE_EN_REG[7:0]** register. The masked interrupt status can be read in the **SS_TH_PULSE_STATUS_REG[7:0]** register. Upon reception of an interrupt, software should perform the following:

Copyright © 2025 Texas Instruments Incorporated

- Read the SS_TH_PULSE_STATUS_REG[7:0] register to determine which channel(s) caused the interrupt.
- Process THost packets for the interrupting channel(s) to acknowledge the CPDMA interrupt.
- Write the CPSW_2G completion pointer(s).
- Write 0x1 to the CPDMA_EOI_VECTOR_REG register in the CPSW_2G slave address space to acknowledge the subsystem interrupt.

11.2.1.4.4.3 MSS_CPSW_FH_INT Interrupt Description

The **MSS_CPSW_FH_INT** interrupts are each a pulse interrupt selected from the CPSW_2G **FH_PEND[7:0]** interrupts. The transmit pending interrupt(s) is selected by setting one or more bits in the **SS_FH_PULSE_EN_REG[7:0]** register. The masked interrupt status can be read in the **SS_FH_PULSE_STATUS_REG[7:0]** register. Upon reception of an interrupt, software should perform the following:

- Read the SS_FH_PULSE_STATUS_REG[7:0] register to determine which channel(s) caused the interrupt.
- Process THost packets for the interrupting channel(s).
- Write the CPSW_2G completion pointer(s) to acknowledge the CPDMA interrupt.
- Write 0x2 to the CPDMA_EOI_VECTOR_REG register in the CPSW_2G slave address space to acknowledge the subsystem interrupt.

11.2.1.4.4.4 MSS_CPSW_MISC_INT Interrupt Description

The **MSS_CPSW_MISC_INT** interrupts are each an immediate (non-paced) pulse interrupt selected from the miscellaneous interrupts (**DED_PEND, SEC_PEND, EVNT_PEND, STAT_PEND,HOST_PEND, MDIO_LINKINT,MDIO_USERINT**). The miscellaneous interrupt bits are enabled by setting one or more bits in the **SS_MISC_EN_REG** register. The masked interrupt status can be read in the **SS_MISC_STATUS_REG** register. Upon reception of an interrupt, software should perform the following:

- Read the **SS_MISC_STATUS_REG** register to determine the cause of the interrupt.
  - MDIO_USERINT is the logical “OR” of the CPSW_2G MDIO MDIO_USERINT[1:0].
  - MDIO_LINKINT is the logical “OR” of the CPSW_2G MDIO MDIO_LINKINT[1:0]
  - HOST_PEND is the CPSW_2G CPDMA host error interrupt.
  - STAT_PEND is the logical “OR” of the CPSW_2G statistics interrupt STAT_PEND[2:0].
  - EVNT_PEND is the CPSW_2G CPTS event interrupt.
  - SEC_PEND is the ECC Single bit error interrupt.
  - DED_PEND is the ECC double bit error interrupt.
- Process the interrupt.
- Write 0x3 to the CPDMA_EOI_VECTOR register in the CPSW_2G slave address space to acknowledge the subsystem interrupt.

11.2.1.4.4.5 ECC SEC ESM Interrupt (MSS_CPSW_SERR)

ESM interrupt indicating a CPSW_2G ECC single error has been detected and corrected. Although the **MSS_CPSW_SERR** value can be read in the **CPDMA_IN_VECTOR** register, there is no EOI associated with this interrupt. It is a direct output of the CPSW_2G ECC aggregator module. MSS can enable this interrupt from **SS_MISC_EN_REG[5]** and read status from **SS_TH_PULSE_STATUS_REG[5]**

11.2.1.4.4.6 ECC DED ESM Interrupt (MSS_CPSW_UERR)

ESM interrupt indicating a CPSW_2G ECC double error has been detected. Although the **MSS_CPSW_UERR** value can be read in the **CPDMA_IN_VECTOR** register, there is no EOI associated with this interrupt. It is a direct output of the CPSW_2G ECC aggregator module. MSS can enable this interrupt from **SS_MISC_EN_REG[6]** and read status from **SS_MISC_STATUS_REG[6]**.

11.2.1.4.4.7 THost Threshold Interrupts for CPDMA

Each of the eight THost channels has a corresponding THost threshold interrupt (**TH_THRESH_PEND[7:0]**). The THost threshold interrupts are level interrupts that remain asserted until the triggering condition is cleared by the host. Each of the eight threshold interrupts may be individually enabled by setting to one the appropriate bit in the **CPDMA_TH_INTSTAT_SET** register. Each of the eight channel interrupts may be individually disabled by clearing to zero the appropriate bit in the **CPDMA_TH_INTSTAT_CLR** register. The raw

Copyright © 2025 Texas Instruments Incorporated

and masked interrupt receive interrupt status may be read by reading the **CPDMA_TH_INTSTAT_RAW** and **CPDMA_TH_INTSTAT_MASKED** registers respectively. A **TH_THRESH_PEND[7:0]** interrupt bit is asserted when enabled and when the channel's associated freebuffer count (**CPDMA_TH(0/7)_FREEBUFFER**) is less than or equal to the channel's associated flow control threshold register (**CPDMA_TH(0/7)_PENDTHRESH**. The threshold interrupts are intended to give the host an indication that resources are running low for a particular channel(s).

11.2.1.4.4.8 Thost Packet Completion Interrupts for CPDMA

The THost DMA controller has eight channels with each channel having a corresponding interrupt (**TH_PEND[7:0]**). The THost interrupts are level interrupts that remain asserted until cleared by the host. Each of the eight channel interrupts may be individually enabled by setting to one the appropriate bit in the **CPDMA_TH_INTSTAT_SET** register. Each of the eight channel interrupts may be individually disabled by clearing to zero the appropriate bit in the **CPDMA_TH_INTSTAT_CLR** register. The raw and masked interrupt interrupt status may be read by reading the **CPDMA_TH_INTSTAT_RAW** and **CPDMA_TH_INTSTAT_MASKED** registers respectively. When a packet transfer is complete, the CPDMA issues an interrupt to the host by writing the packet's last buffer descriptor address to the appropriate channel queue's **CPDMA_TH(0..7)_CP** completion pointer. The interrupt is generated by the write, regardless of the value written. Upon interrupt reception, the host processes one or more packets from the queue and then acknowledges one or more interrupt(s) by writing the address of the last buffer descriptor processed to the queue's associated **CPDMA_TH(0..7)_CP** Completion Pointer. If the host written buffer address value is different from the buffer address written by the port, then the level interrupt remains asserted which means that the CPDMA has transferred more packets than the host has processed interrupts for. If the host written buffer address value is equal to the port written value then the host has processed all packets that the CPDMA has transferred and the level interrupt is deasserted. The CPDMA write to the completion pointer actually stores the value. The host written value is actually not written to the register location. The host written value is compared to the register contents which was written by the CPDMA. If the two values are equal then the interrupt is removed, otherwise the interrupt remains asserted. The host may process multiple packets previous to acknowledging an interrupt, or the host may acknowledge interrupts for every packet.

11.2.1.4.4.9 Fhost Packet Completion Interrupts for CPDMA

The FHost DMA controller has eight channels with each channel having a corresponding interrupt (**FH_PEND[7:0]**). The FHost interrupts are level interrupts that remain asserted until cleared by the host. Each of the eight channel interrupts may be individually enabled by setting to one the appropriate bit in the **CPDMA_FH_INTSTAT_MASKED_SET** register. Each of the eight channel interrupts may be individually disabled by clearing to zero the appropriate bit in the **CPDMA_FH_INTSTAT_MASKED_CLR** register. The raw and masked interrupt status may be read by reading the **CPDMA_FH_INTSTAT_RAW** and **CPDMA_FH_INTSTAT_MASKED** registers respectively. When each packet transfer is complete, the CPDMA issues an interrupt to the host by writing the packet's last buffer descriptor address to the appropriate channel **CPDMA_FH(0..7)_CP** completion pointer register. The interrupt is generated by the write, regardless of the value written. Upon interrupt reception, the host processes one or more packets from the queue and then acknowledges an interrupt by writing the address of the last buffer descriptor processed to the queue's associated Fhost Completion Pointer. If the host written buffer address value is different from the buffer address written by the port, then the level interrupt remains asserted which means that the CPDMA has transferred more packets than the host has processed interrupts for. If the host written buffer address value is equal to the port written value then the host has processed all packets that the CPDMA has transferred and the level interrupt is deasserted. The CPDMA write to the completion pointer actually stores the value. The host written value is actually not written to the register location. The host written value is compared to the register contents which was written by the CPDMA and if the two values are equal then the interrupt is removed, otherwise the interrupt remains asserted. The host may process multiple packets previous to acknowledging an interrupt, or the host may acknowledge interrupts for every packet.

11.2.1.4.5 CPSW_2G

The CPSW_2G RMII/ RGMII interface is compliant to the IEEE Std 802.3 Specification.

Copyright © 2025 Texas Instruments Incorporated

The CPSW_2G contains one Ethernet port interface (Ethernet port 1), one CPPI packet streaming interface host port (port 0), Common Platform Time Sync (CPTS), ALE Engine and Statistics (STATS). A top-level block diagram of the CPSW_2G is shown in Figure 11-146.

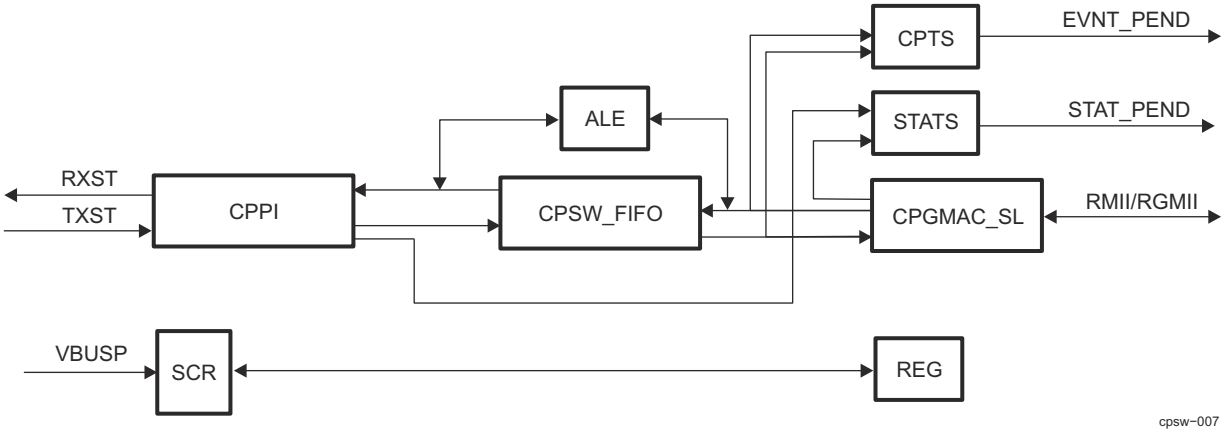

Figure 11-146. CPSW_2G Block Diagram

11.2.1.4.5.1 Address Lookup Engine (ALE)

The Address Lookup Engine (ALE) is a sub-block of the CPSW Switch and it processes all received packets and determines to which port(s) the packet should be forwarded. The ALE uses the incoming packet received port number, destination address, source address, length/type, and VLAN information to determine how the packet should be forwarded. The ALE outputs the port mask to the switch fabric that indicates the port(s) the packet should be forwarded to. The ALE is enabled when the ENABLE bit in the ALE_CONTROL_REG register is set. All packets are dropped when the ENABLE bit is cleared to 0.

11.2.1.4.5.1.1 Error Handling

In normal operation, the Ethernet port is configured to issue an abort, instead of an end of packet, at the end of a packet that contains an error (runt, frag, oversize, jabber, crc, alignment, code etc.) or at the end of a MAC control packet. However, when the PN_MAC_CONTROL_REG configuration bit(s) RX_CEF_EN, RX_CSF_EN, or RX_CMF_EN are set, error frames, short frames or MAC control frames have a normal end of packet instead of an abort at the end of the packet. When the ALE receives a packet that contains errors (due to a set header error bit), or a MAC control frame and does not receive an abort, the packet will be forwarded only to the host port (port 0). Packets with errors that are forwarded to the host have no VLAN untagging or drop due to rate limiting. No ALE learning occurs on packets with errors or mac control frames. Learning is based on source address and lookup is based on destination address. Directed packets from the host are not learned, updated, or touched.

11.2.1.4.5.1.2 Bypass Operations

The ALE may be configured to operate in bypass mode by setting the BYPASS bit in the ALE_CONTROL_REG register. When in bypass mode, all Ethernet port received packets are forwarded only to the host port (port 0). In bypass mode, the ALE processes host port transmit packets the same as in normal mode. In general, packets would be directed by the host in bypass mode.

11.2.1.4.5.1.3 OUI Deny or Accept

The ALE may be configured to operate in OUI deny mode by setting the enable_oui_deny bit in the ALE_CONTROL register. When in OUI deny mode, any packet with a non-matching OUI source address will be dropped to the host unless the packet destination address matches with a supervisory table entry. (Non-matching OUI source address broadcast/multicast packets will be dropped to the host unless the packet destination address is entered into the table with the super bit set. Non-matching OUI source address unicast packets will be dropped to the host unless the unicast destination address is in the table with block and Secure both set). When enable_oui_deny is cleared, any packet source address matching an OUI address

Copyright © 2025 Texas Instruments Incorporated

table entry will be dropped to the host unless the destination address matches with a supervisory address table entry. (Broadcast packets matching the OUI source address will be dropped to the host unless the broadcast destination address is entered into the table with the super bit set. Unicast packets matching the OUI source address will be dropped to the host unless the unicast destination address is in the table with block and Secure both set)

11.2.1.4.5.1.4 Statistics Counting

ALE sends many statistics along with the frame routing so the CPSW can count them on a per port basis. The events specified through the CPSW_ALE_STAT_DIAG[3-0] STAT_DIAG field are individually counted in CPSW per port statistics counters.

11.2.1.4.5.1.5 Supervisory packets

Multicast supervisory packets are designated by the SUPER bit in the table entry. Unicast supervisory packets are indicated when BLOCK and SECURE are both set. Supervisory packets are not dropped due to rate limiting, OUI, or VLAN processing. The purpose of supervisory packets is to allow packets that would be otherwise blocked to be forwaded for special purposes.

11.2.1.4.5.1.6 ALE Lookup Table Entry Definitions

The ALE table contains multiple table entry types. Each table entry represents a free entry, an address, a VLAN, an address/VLAN pair, or an OUI address. Software should ensure that there are not double address entries in the table. The double entry used would be indeterminate. Reserved table bits must be written with zeroes.

Source Address learning occurs for packets with a unicast, multicast or broadcast destination address and a unicast or multicast (including broadcast) source address. Multicast source addresses have the group bit (bit 40) cleared before ALE processing begins, changing the multicast source address to a unicast source address. A multicast address of all ones is the broadcast address which may be added to the table. A learned unicast source address is added to the table with the following control bits:

Table 11-274. Learned Address Control Bits

Bit(s)	Value
Ageable	1
Touch	1
BLOCK	0
SECURE	0

If a received packet has a source address that is equal to the destination address then the following occurs:

- The address is learned if the address is not found in the table.
- The address is updated if the address is found.
- The packet is dropped.

Table Entry Type

00 - Free Entry

01 - Address Entry : unicast or multicast determined by destination **address bit 40.** (1:Multicast, 0:Unicast)

10 - VLAN entry

11 - VLAN Address Entry : unicast or multicast determined by **address bit 40.**(1:Multicast, 0:Unicast)

11.2.1.4.5.1.6.1 Free Table Entry

Table 11-275. Free (Unused) Address Table Entry Bit Values

70:62	61:60	59:0
Reserved	ENTRY_TYPE (00)	Reserved

Copyright © 2025 Texas Instruments Incorporated

11.2.1.4.5.1.6.2 Multicast Address Table Entry (Bit 40==1)

Table 11-276. Multicast Address Table Entry Bit Values

70:68	67:66	65	64	63:62	61:60	59:48	47:0
Reserved	PORT_MASK	SUPER	IgnoreMbits	MCAST_FWD_STATE	ENTRY_TYPE (01)	Reserved	MULTICAST_ADDRESS

IgnoreMbits

Ignore Multicast Bits - Indication that the Multicast Address has ignored bits.

Supervisory Packet (SUPER)

When set, this field indicates that the packet with a matching multicast destination address is a supervisory packet.

0: Non-supervisory packet

1: Supervisory packet

Port Mask(1:0) (PORT_MASK)

This 2-bit field is the port bit mask that is returned with a found multicast destination address. There may be multiple bits set indicating that the multicast packet may be forwarded to multiple ports (but not the receiving port).

Multicast Forward State (MCAST_FWD_STATE)

Indicates the port state(s) required for the received port on a destination address lookup in order for the multicast packet to be forwarded to the transmit port(s). A transmit port must be in the Forwarding state in order to forward the packet. If the transmit PORT_MASK has multiple set bits then each forward decision is independent of the other transmit port(s) forward decision.

00 - Forwarding

01 - Blocking/Forwarding/Learning

10 - Forwarding/Learning

11 - Forwarding

The forward state test returns a true value if both the RX and TX ports are in the required state.

Table Entry Type (ENTRY_TYPE)

Address entry type. Unicast or multicast determined by address bit 40.

01: Address entry. Unicast or multicast determined by address bit 40.

Packet Address (MULTICAST_ADDRESS)

This is the 48-bit packet MAC address. For an OUI address, only the upper 24-bits of the address are used in the source or destination address lookup. Otherwise, all 48-bits are used in the lookup.

11.2.1.4.5.1.6.3 VLAN/Multicast Address Table Entry (Bit 40==1)

Table 11-277. VLAN/Multicast Address Table Entry Bit Values

70:68	67:66	65	64	63:62	61:60	59:48	47:0
Reseved	PORT_MASK	SUPER	Reserved	MCAST_FWD_STATE	ENTRY_TYPE (11)	VLAN_ID	MULTICAST_ADDRESS

Supervisory Packet (SUPER)

When set, this field indicates that the packet with a matching multicast destination address is a supervisory packet.

Copyright © 2025 Texas Instruments Incorporated

0: Non-supervisory packet

1: Supervisory packet

Port Mask(1:0) (PORT_MASK)

This 2-bit field is the port bit mask that is returned with a found multicast destination address. There may be multiple bits set indicating that the multicast packet may be forwarded to multiple ports (but not the receiving port).

Multicast Forward State (MCAST_FWD_STATE)

Indicates the port state(s) required for the received port on a destination address lookup in order for the multicast packet to be forwarded to the transmit port(s). A transmit port must be in the Forwarding state in order to forward the packet. If the transmit PORT_MASK has multiple set bits then each forward decision is independent of the other transmit port(s) forward decision.

00 - Forwarding

01 - Blocking/Forwarding/Learning

10 - Forwarding/Learning

11 - Forwarding

The forward state test returns a true value if both the RX and TX ports are in the required state.

Table Entry Type (ENTRY_TYPE)

Address entry type. Unicast or multicast determined by address bit 40.

11: VLAN address entry. Unicast or multicast determined by address bit 40.

VLAN ID (VLAN_ID)

The unique identifier for VLAN identification. This is the 12-bit VLAN ID.

Packet Address (MULTICAST_ADDRESS)

This is the 48-bit packet MAC address. For an OUI address, only the upper 24-bits of the address are used in the source or destination address lookup. Otherwise, all 48-bits are used in the lookup.

11.2.1.4.5.1.6.4 Unicast Address Table Entry (Bit 40==0)

Table 11-278. Unicast Address Table Entry Bit Values

70:68	67	66	65	64	63:62	61:60	59:48	47:0
Reseved	TRUNK	PORT_NUMBER	BLOCK	SECURE	UNICAST_TYPE (00) or (X1)	ENTRY_TYPE (01)	Reserved	UNICAST_ADDRESS

Trunk

Trunk Indicator -

0 - the port bits in the entry are the port number

1 - the port bits in the entry are the trunk number

Port Number (PORT_NUMBER)

This field indicates the port number (not port mask) that the packet with a unicast destination address may be forwarded to. Packets with unicast destination addresses are forwarded only to a single port (but not the receiving port).

Block (BLOCK)

Copyright © 2025 Texas Instruments Incorporated

The block bit indicates that a packet with a matching source or destination address should be dropped (block the address).

0 - Address is not blocked.

1 - Drop a packet with a matching source or destination address (secure must be zero)

If block and secure are both set, then they no longer mean block and secure. When both are set, the block and secure bits indicate that the packet is a unicast supervisory (super) packet and they determine the unicast forward state test criteria. If both bits are set then the packet is forwarded if the receive port is in the Forwarding/ Blocking/Learning state. If both bits are not set then the packet is forwarded if the receive port is in the Forwarding state.

Secure (SECURE)

This bit indicates that a packet with a matching source address should be dropped if the received port number is not equal to the table entry port_number.

0 - Received port number is a don't care.

1 - Drop the packet if the received port is not the secure port for the source

address and do not update the address (block must be zero)

Unicast Type (UNICAST_TYPE)

This field indicates the type of unicast address the table entry contains.

00 - Unicast address that is not ageable.

01 - Ageable unicast address that has not been touched.

10 - OUI address - lower 24-bits are don't cares (not ageable).

11 - Ageable unicast address that has been touched.

Table Entry Type (ENTRY_TYPE)

Address entry. Unicast or multicast determined by address bit 40.

01: Address entry. Unicast or multicast determined by address bit 40.

Packet Address (UNICAST_ADDRESS)

This is the 48-bit packet MAC address. All 48-bits are used in the lookup.

11.2.1.4.5.1.6.5 OUI Unicast Address Table Entry

Table 11-279. OUI Unicast Address Table Entry Bit Values

70:64	63:62	61:60	59:48	47:24	23:0
Reserved	UNICAST_TYPE (10)	ENTRY_TYPE (01)	Reserved	UNICAST_OUI	Reserved

Unicast Type (UNICAST_TYPE)

This field indicates the type of unicast address the table entry contains.

00 - Unicast address that is not ageable.

01 - Ageable unicast address that has not been touched.

10 - OUI address - lower 24-bits are don't cares (not ageable).

11 - Ageable unicast address that has been touched.

Table Entry Type (ENTRY_TYPE)

Address entry. Unicast or multicast determined by address bit 40.

Copyright © 2025 Texas Instruments Incorporated

01: Address entry. Unicast or multicast determined by address bit 40.

Packet Address (UNICAST_OUI)

For an OUI address, only the upper 24-bits of the address are used in the source or destination address lookup.

11.2.1.4.5.1.6.6 VLAN/Unicast Address Table Entry (Bit 40==0)

Table 11-280. Unicast Address Table Entry Bit Values

70:68	67	66	65	64	63:62	61:60	59:48	47:0
Reseved	TRUNK	PORT_NUMBER	BLOCK	SECURE	UNICAST_TYPE (00) or (X1)	ENTRY_TYPE (11)	VLAN_ID	UNICAST_ADDRESS

Trunk

Trunk Indicator -

0 - the port bits in the entry are the port number

1 - the port bits in the entry are the trunk number

Port Number (PORT_NUMBER)

This field indicates the port number (not port mask) that the packet with a unicast destination address may be forwarded to. Packets with unicast destination addresses are forwarded only to a single port (but not the receiving port).]

Block (BLOCK)

The block bit indicates that a packet with a matching source or destination address should be dropped (block the address).

0 - Address is not blocked.

1 - Drop a packet with a matching source or destination address (secure must be zero)

If block and secure are both set, then they no longer mean block and secure. When both are set, the block and secure bits indicate that the packet is a unicast supervisory (super) packet and they determine the unicast forward state test criteria. If both bits are set then the packet is forwarded if the receive port is in the Forwarding/ Blocking/Learning state. If both bits are not set then the packet is forwarded if the receive port is in the Forwarding state.

Secure (SECURE)

This bit indicates that a packet with a matching source address should be dropped if the received port number is not equal to the table entry PORT_NUMBER.

0 - Received port number is a don't care.

1 - Drop the packet if the received port is not the secure port for the source address and do not update the address (block must be zero)

Unicast Type (UNICAST_TYPE)

This field indicates the type of unicast address the table entry contains.

00 - Unicast address that is not ageable.

01 - Ageable unicast address that has not been touched.

10 - OUI address - lower 24-bits are don't cares (not ageable).

11 - Ageable unicast address that has been touched.

Table Entry Type (ENTRY_TYPE)

Copyright © 2025 Texas Instruments Incorporated

Address entry. Unicast or multicast determined by address bit 40.

11: VLAN address entry. Unicast or multicast determined by address bit 40.

VLAN ID (VLAN_ID)

The unique identifier for VLAN identification. This is the 12-bit VLAN ID.

Packet Address (UNICAST_ADDRESS)

This is the 48-bit packet MAC address. All 48-bits are used in the lookup.

11.2.1.4.5.1.6.7 VLAN Table Entry

Table 11-281. Inner VLAN Table Entry

70:68	67:66	65	64:62	61:60	59:48	47	46:44	43	42:26	25:24	23	22:20	19	18:2	1:0
Resvd	NoLrnMsk	Ingress Chk	000	10	iVLANID	Resvd	RegIdx	NoFrag	Reserved	fwdutag	Reserved	UregIdx	LmtNxt Hdr	Reserved	Member

Table 11-282. Outer VLAN Table Entry

70:68	67:66	65	64:62	61:60	59:48	47	46:44	43	42:26	25:24	23	22:20	19	18:2	1:0
Resvd	NoLrn Msk	Ingress Chk	010	10	oVLAN ID	Resvd	RegIdx	NoFrag	Reserved	fwdutag	Reserved	UregIdx	LmtNxt Hdr	Reserved	Member

Member

VLAN Member list - This field indicates which port(s) are a member of the associated VLAN.

LmtNxtHdr

VLAN Limit Next Header Control - Causes frames to be dropped if the Protocol/Nxt Header does not match the ALE_NXT_HDR register values

UregIdx

VLAN Unregister Multicast Index - Index into VLAN_Mask_Mux register array that is used to create the unregistered multicast flood mask.

fwdutag

VLAN Forward Untagged Egress - Causes the packet VLAN tag to be removed on egress for the specified port(s).

NoFrag

LAN No IPv4 Fragmented frames Control - Causes IPv4 fragmented IP frames to be dropped.

RegIdx

VLAN Registered Multicast Index - Index into VLAN_Mask_Mux register array that is used to create the registered multicast flood mask.

iVLANID

Inner VLAN ID - This is the 12-bit Inner VLAN ID, normally referred to as C-VLANID

oVLANID

Outer VLAN ID - This is the 12-bit Outer VLAN ID, normally referred to as S-VLANID

IngressChk

VLAN Ingress Check - When set, if the receive port is not a member of this VLAN then the packet is dropped. This is similar to the vid_ingress_check bit in the ale_port_control register except this check is for this VLAN only (not all VLANs).

Copyright © 2025 Texas Instruments Incorporated

NoLrnMsk

VLAN No Learn Mask - When a bit is set in this mask, a packet with an unknown source address received on the associated port will not be learned (i.e. When a VLAN packet is received and the source address is not in the table, the source address will not be added to the table).

Table 11-283. IPv4 Table Entry

70	69:65	64:62	61:60	59:32	31:0
Resvd	IgnBits	110	10	Reserved	IPv4Adr

Table 11-284. IPv6 Table Entry High

70:64	63	62	61:60	59:0
IgnBits	Resvd	1	10	IPv6Adr[127:68]

Table 11-285. IPv6 Table Entry Low

70:63	62	61:60	59:0
IPv6Adr[67:60]	1	10	IPv6Adr[59:0]

IgnBits

Inore Bits - Indicates the number of lower address bits (IPv4 or IPv6) to be ignored starting at bit zero. Ignored bits must be zero value in the table entry

11.2.1.4.5.1.7 ALE Policing and Classification

The ALE has a number of configurable policer engines. Each policer engine can be used for classification and or policing. Policing is an extension of the classifier function that allows for color marking and rate limiting due to classifier bandwidth measurement thresholds. Any policer engine can be used for classification alone by not using the bandwidth limiting thresholds. The policers_div_8 field in the ALE_Status register indicates the number of policers available to be used for classification or policing.

Each policer can be enabled to match on one or more of any of the below packet fields for classification. All but Port and Priority are index references to the ALE table entries.

ALE Policing

The policing function on each policer engine is implemented as dual-counter three-color marking engine. The first counter is the committed information rate (CIR) counter and the second counter is the peak information rate (PIR) counter. The policing function can use either or both counters. Based on the counter values the packet color is determined. The color is used to determine whether the packet is dropped or forwarded. The ALE has a local feature that can drop packets regardless of queue state.

The policing rates are determined by the below equations:

CIR policing rate in Mbit/s = ((ALE frequency in Mhz) * cir_idle_inc_val) / 32768

PIR policing rate in Mbit/s = ((ALE frequency in Mhz) * pir_idle_inc_val) / 32768

Each policer has 10 different match operations (see below Classification). Since multiple policing entries can be hit on a single packet this provides the ability to create precise traffic stream control.

11.2.1.4.5.1.7.1 ALE Classification

Each policer can be enabled to classify on one or more of any of the below packet fields for classification or policing. All but Port and Priority are index references to the ALE table entries.

- Port or Trunk Group Number
- Priority extracted from VLAN, mapped from DSCP if enabled or Default Port Priority
- Organization Network Unique identifier - ONU

Copyright © 2025 Texas Instruments Incorporated

- Destination Address - DA
- Source Address - SA
- Outer VLANID - S-VLANID
- Inner VLANID - C-VLANID
- Ether Type
- IP Source Address - IPSA with full CIDR masking for IPv4 and IPv6
- IP Destination Address - IPSA with full CIDR masking for IPv4 and IPv6

Multiple classifiers can match on a single packet. For example a classifier can be enabled to match on priority while another classifier could match on IP address. The ALE will return to the switch the highest classifier entries thread ID that matched with an enabled thread ID number. This could be used to further host routing of the packet.

11.2.1.4.5.1.7.1.1 Classifier to CPPI Transmit Flow ID Mapping

The ALE can generate a 6-bit transmit CPPI Flow ID based on classifier matches that can be used instead of the switch default transmit Flow ID mapping. The switch default flow ID is the remapped received packet priority (0 to 7). Thread and flow ID are used interchangeably for this since there is a single hardware thread (TXST_THREAD_MREADY) but there are 6-bits of FLOW_ID in the transmit CPPI INFO word 0. When enabled, the highest classifier match can map to a particular 6-bit flow ID value that is associated with the classifier. The ALE also supports an optional ALE default thread/flow ID value in the event that no classifiers match. Each thread/flow ID, including the ALE default thread/flow ID, has an enable such that the ALE default thread/Flow ID is used if enabled and if no matches occur (instead of the remapped received packet priority). If the ALE default is not enabled and no matches occur then the switch default value will be used. If multiple classifier matches occur, the highest match with a thread enable bit set will be used. The resultant flow ID has the CPSW_P0_FLOW_ID_OFFSET_REG register value added to it to determine the actual value in the INFO 0 Flow ID field.

Three registers are used for ALE classification thread/flow ID mapping configuration (CPSW_ALE_THREAD_DEF_REG, CPSW_ALE_THREAD_CTL_REG and CPSW_ALE_THREAD_VAL_REG). The three thread mapping registers are used independently and are separate from the other ALE policing registers. The CPSW_ALE_THREAD_CTL_REG register allows the CPSW_ALE_THREAD_VAL_REG register contents to be written to the selected classifier. There is a single CPSW_ALE_THREAD_DEF_REG that is used for all classifiers. The thread mapping registers can be written or changed at any time but any packets that are already processed will not have their thread altered.

11.2.1.4.5.1.8 Mirroring

The ALE supports three mirroring modes: destination port, source port and or table entry.

Destination port mirroring allows packets from any ingress port or trunk which ends up switching to a particular egress destination port or trunk to be mirrored to yet another egress destination port or trunk. For example any traffic from any port that is switched to port 'A' can be also mirrored to port 'B'. (MIRROR_DP=A, MIRROR_DEN=1h, MIRROR_TOP=B in the ALE_CONTROL register).

Source port mirroring allows packets received on any enabled ingress source port or trunk to be switched to the mirror egress port as well as the actual egress destination ports. For example traffic received on ingress port 'A' can be switched to egress port 'B' as well as the intended egress destination port.(MIRROR_SP=1h in the ALE_PORTn_CONTROL register, MIRROR_SEN=1h, MIRROR_TOP=B in the ALE_CONTROL register).

Table entry mirroring allows for any MAC Address, MAC Address with VLAN, ONU Address or VLAN entry that matches on ingress to be switched to the egress destination as well as the actual egress destination. For example all traffic for VLAN ID of 35 can be mirrored to port 'B'. That is any traffic switched on VLAN ID of 35 will be mirrored. ({VLAN ID of 35 in ALE Table entry index=C}, MIRROR_MIDX=C, MIRROR_MEN=1h, MIRROR_TOP=B)

In the event that mirrored packets are mirrored to or from a port that is also the mirror port the packet will not be duplicated or marked as a mirror packet since the packet has already been on the port as ingress or egress. The packet sent to the mirror port may have modified VLAN info based on the port and VLAN lookup table entries.

Copyright © 2025 Texas Instruments Incorporated

The mirror port need not be a member of the VLAN ID it is mirroring, the ALE will forward traffic to the mirror port after ingress and egress filters are applied.

The switch may decide to drop any mirror traffic based on switch buffer thresholds as to prevent required traffic from becoming congested.

Port mirroring is controlled by register fields in ALE_CONTROL, ALE_CONTROL2 and the port control registers.

- MIRROR_DP - The destination port that will have its traffic mirrored (ALE_CONTROL_REG register).
- MIRROR_TOP - The port to which mirrored traffic is sent (ALE_CONTROL_REG register).
- MIRROR_MEN - The enable for mirroring traffic that matches a supported lookup table entry (ALE_CONTROL_REG register).
- MIRROR_DEN - The Enable for destination port mirroring (ALE_CONTROL_REG register).
- MIRROR_SEN - The Enable for source port mirroring (ALE_CONTROL_REG register).
- MIRROR_MIDX - The index of a lookup table entry that will be mirrored ALE_CONTROL2_REG register).
- Px_MIRROR_SP - The enable for the Source port to be mirrored. Although multiple source ports can be mirrored concurrently, a mirror traffic bandwidth issue may occur on the mirror egress port (ALE_PORTn_CONTROL register).

11.2.1.4.5.1.9 Trunking

The ALE supports port trunking of any port in any of four trunk groups. That is, four trunk groups can be supported with up to eight ports in each trunk group. There are no port adjacency rules for trunk groups. When ports are a member of a trunk group, addresses added and used in the lookup table will refer to the trunk group rather than port as indicated in the lookup table entries. If ports are removed from a trunk group, the ALE will redistribute the traffic based on the crc polynomial of enabled fields and the remaining ports within the trunk group. A trunk group may contain only one port. Packet priority, DA, SA, C-VLAN ID, IPv4SA, IPv4DA, IPv6SA, and/or IPv6DA can be used in the hash to generate destination port within the trunk group. If all hash enables are disabled, the packet can be directed to a particular port within the trunk group which allows for testing paths etc. A host directed frame is directed to the directed port regardless of trunk group settings.

Trunking is controlled through fields in the ALE_CONTROL2_REG register and in each ALE ALE_PORTn_CONTROL_REG register:

- TRK_EN_DST - Enable destination address hashing for trunk port calculation.
- TRK_EN_SRC - Enable source address hashing for trunk port calculation.
- TRK_EN_PRI - Enable priority hashing for trunk port calculation.
- TRK_EN_VLAN - Enable inner C-VLAN ID hashing for trunk port calculation.
- TRK_EN_SIP - Enable source IP address hashing for trunk port calculation.
- TRK_EN_DIP - Enable destination IP address hashing for trunk port calculation.
- TRK_BASE - Hashing formula starting value and test port offset.
- TRUNK_EN - Enable this port as a trunk group
- TRUNK_NUMBER - Trunk group number defines this port as a member of a particular trunk group.

11.2.1.4.5.1.10 DSCP

The ALE can map DSCP field to priority prior to classification matching. When enabled the DSCP is mapped via 64 priority entries such that any DSCP value can be mapped to any of the eight priorities. When a packet is received without a VLAN priority this remapped priority can be used instead of the default Port VLAN priority field. See P0_RX_DSCP_MAP_REG and PN_RX_DSCP_MAP_REG registers in the Register Manual section for DSCP mapping.

11.2.1.4.5.1.11 Packet Forwarding Processes

There are four processes that an incoming received packet may go through to determine packet forwarding. The processes are *Ingress Filtering*, *VLAN_Aware Lookup*, *VLAN_Unaware Lookup*, and *Egress.*

Packet processing begins in the Ingress Filtering process. Each port has an associated packet forwarding state that can be one of four values (Disabled, Blocked, Learning, or Forwarding). The default state for all ports is Disabled. The host sets the packet forwarding state for each port.

Copyright © 2025 Texas Instruments Incorporated

In the packet ingress process (receive packet process), there is a forward state test for unicast destination addresses and a forward state test for multicast addresses. The multicast forward state test indicates the port states required for the receiving port in order for the multicast packet to be forwarded to the transmit port(s). A transmit port must be in the Forwarding state for the packet to be forwarded for transmission. The MCAST_FWD_STATE indicates the required port state for the receiving port as indicated in the preceding table. The unicast forward state test indicates the port state required for the receiving port in order to forward the unicast packet. The transmit port must be in the Forwarding state in order to forward the packet. The BLOCK and SECURE bits determine the unicast forward state test criteria. If both bits are set then the packet is forwarded if the receive port is in the Forwarding/Blocking/Learning state. If both bits are not set then the packet is forwarded if the receive port is in the Forwarding state. The transmit port must be in the Forwarding state regardless. The forward state test used in the ingress process is determined by the destination address packet type (multicast/unicast).

In general, packets received with errors are dropped by the address lookup engine without learning, updating, or touching the address. The error condition and the abort are indicated by the Ethernet port to the ALE. Packets with errors may be passed to the host (not aborted) by a Ethernet port, if the port has the RX_CMF_EN, RX_CEF_EN, or RX_CSF_EN bit(s) set in the CPSW_PN_MAC_CONTROL_REG register. Error packets that are passed to the host by the Ethernet port are considered to be bypass packets by the ALE and are sent only to the host. Error packets do not learn, update, or touch addresses regardless of whether they are aborted or sent to the host. Packets with long or short errors received by the host are dropped. Packets with errors received by the host are forwarded as normal.

The following control bits are in the CPSW PN_MAC_CONTROL_REG register:

- [22] RX_CEF_EN - enables frames that are fragments, long, jabber, CRC, code, and alignment errors to be forwarded
- [23] RX_CSF_EN - enables short frames to be forwarded
- [24] RX_CMF_EN - enables MAC control frames to be forwarded.

11.2.1.4.5.1.11.1 Ingress Filtering Process

Condition and action
If ((ALE BYPASS) and (host port is not the receive port)) then use host portmask and go to Egress process
if (directed packet) then use directed port number and go to Egress process
If (Rx PORT_STATE is Disabled) then discard the packet
if ((ALE BYPASS or error packet) and (host port is not the receive port)) then use host portmask and go to Egress process
if (((BLOCK) and (unicast source address found)) or ((BLOCK) and (unicast destination address found))) then discard the packet
if ((ENABLE_RATE_LIMIT) and (rate limit exceeded) and (not RATE_LIMIT_TX) then if (((Multicast/Broadcast destination address found) and (not SUPER)) or (Multicast/Broadcast destination address not found)) then discard the packet
if ((not forward state test valid) and (destination address found)) then discard the packet to any port not meeting the requirements • Unicast destination addresses use the unicast forward state test and multicast destination addresses use the multicast forward state test.
if ((destination address not found) and ((not transmit port forwarding) or (not receive port forwarding))) then discard the packet to any ports not meeting the above requirements

Copyright © 2025 Texas Instruments Incorporated

if (source address found) and (secure) and (not block) and (receive port number != port_number)) then discard the packet
if ((not super) and (drop_untagged) and ((non-tagged packet) or ((priority tagged) and not(en_vid0_mode)) then discard the packet

If (VLAN_Unaware)
CPSW_ALE_FORCE_UNTAGGED_EGRESS_REG = “000000”
CPSW_ALE_UNKNOWN_MCAST_FLOOD_REG = “111111”
CPSW_ALE_UNKNOWN_REG_MCAST_FLOOD_REG = “111111”
VLAN_MEMBER_LIST = “111111”
else if (VLAN not found)
CPSW_ALE_FORCE_UNTAGGED_EGRESS_REG = CPSW_ALE_FORCE_UNTAGGED_EGRESS_REG
CPSW_ALE_UNKNOWN_MCAST_FLOOD_REG = CPSW_ALE_UNKNOWN_REG_MCAST_FLOOD_REG
CPSW_ALE_UNKNOWN_REG_MCAST_FLOOD_REG = CPSW_ALE_UNKNOWN_MCAST_FLOOD_REG
VLAN_MEMBER_LIST = CPSW_ALE_UNKNOWN_VLAN_REG
else
CPSW_ALE_FORCE_UNTAGGED_EGRESS_REG = found CPSW_ALE_FORCE_UNTAGGED_EGRESS_REG
CPSW_ALE_UNKNOWN_MCAST_FLOOD_REG = found CPSW_ALE_UNKNOWN_MCAST_FLOOD_REG
CPSW_ALE_UNKNOWN_REG_MCAST_FLOOD_REG = found CPSW_ALE_UNKNOWN_REG_MCAST_FLOOD_REG
VLAN_MEMBER_LIST = found VLAN_MEMBER_LIST

if ((not SUPER) and (VID_INGRESS_CHECK) and (Rx port is not VLAN member)) then discard the packet
if ((ENABLE_AUTH_MODE) and (source address not found) and not(destination address found and (SUPER))) then discard the packet
if (destination address equals source address) then discard the packet
if (VLAN_AWARE) goto VLAN_Aware_Lookup process else goto VLAN_Unaware_Lookup process

11.2.1.4.5.1.11.2 VLAN_Aware Lookup Process

Condition and action
if ((unicast packet) and (destination address found with or without VLAN) and (not SUPER) then portmask is the logical "AND" of the PORT_NUMBER and VLAN_MEMMBER_LIST less the host port and goto Egress process
if ((unicast packet) and (destination address found with or without VLAN) and (not SUPER)) then portmask is the logical “AND” of the PORT_NUMBER and the VLAN_MEMMBER_LIST and goto Egress process
if ((unicast packet) and (destination address found with or without VLAN) and (SUPER)) then portmask is the PORT_NUMBER and goto Egress process
if (Unicast packet) # destination address not found then portmask is VLAN member LIST less host port and goto Egress process

Copyright © 2025 Texas Instruments Incorporated

if ((Multicast packet) and (destination address found with or without VLAN) and (not SUPER)) then portmask is the logical “AND” of CPSW_ALE_UNKNOWN_MCAST_FLOOD_REG and found destination address/VLAN portmask (PORT_MASK) and VLAN_MEMMBER_LIST and goto Egress process
if ((Multicast packet) and (destination address found with or without VLAN) and (SUPER)) then portmask is the PORT_MASK and goto Egress process
if (Multicast packet) # destination address not found then portmask is the logical “AND” of CPSW_ALE_UNKNOWN_MCAST_FLOOD_REG and VLAN_MEMMBER_LIST then goto Egress process
if (Broadcast packet) then use found VLAN_MEMMBER_LIST and goto Egress process

11.2.1.4.5.1.11.3 VLAN_Unaware Lookup Process

Condition and action
if ((unicast packet) and (destination address found with or without VLAN) and (not SUPER) then portmask is the VLAN_MEMMBER_LIST less the host port and goto Egress process
if ((unicast packet) and (destination address found with or without VLAN) and (not SUPER)) then portmask is the logical “AND” of the PORT_NUMBER and the VLAN_MEMMBER_LIST and goto Egress process
if ((unicast packet) and (destination address found with or without VLAN) and (SUPER)) then portmask is the PORT_NUMBER and goto Egress process
if (Unicast packet) # destination address not found then portmask is VLAN_MEMMBER_LIST less host port and goto Egress process
if ((Multicast packet) and (destination address found with or without VLAN) and (not SUPER)) then portmask is the logical “AND” of CPSW_ALE_UNKNOWN_MCAST_FLOOD_REG and found destination address/VLAN portmask (PORT_MASK) and VLAN_MEMMBER_LIST and goto Egress process
if ((Multicast packet) and (destination address found with or without VLAN) and (SUPER)) then portmask is the PORT_MASK and goto Egress process
if (Multicast packet) # destination address not found then portmask is the logical “AND” of CPSW_ALE_UNKNOWN_MCAST_FLOOD_REG and VLAN_MEMMBER_LIST then goto Egress process
if (Broadcast packet) then use found VLAN_MEMMBER_LIST and goto Egress process

11.2.1.4.5.1.11.4 Egress Process

Condition and action
Clear Rx port from portmask (don’t send packet to Rx port).
Clear disabled ports from portmask.

Copyright © 2025 Texas Instruments Incorporated

if ((ENABLE_OUI_DENY) and (OUI source address not found) and (not ALE BYPASS) and (not error packet) and not ((mcast destination address) and (SUPER))) then Clear host port from portmask
if ((not ENABLE_OUI_DENY) and (OUI source address found) and (not ALE BYPASS) and (not error packet) and not ((mcast destination address) and (SUPER))) then Clear host port from portmask
if ((ENABLE_RATE_LIMIT) and (RATE_LIMIT_TX)) then if (not SUPER) and (rate limit exceeded on any tx port) then clear rate limited tx port from portmask If address not found then SUPER cannot be set.
If portmask is zero then discard packet
Send packet to portmask ports.

11.2.1.4.5.1.11.5 Learning/Updating/Touching Processes

The learning, updating, and touching processes are applied to each receive packet that is not aborted. The processes are concurrent with the packet forwarding process. In addition to the following, a packet must be received without error in order to learn/update/touch an address.

11.2.1.4.5.1.11.5.1 Learning Process

The learning process is applied to each receive packet that is not aborted. The learning process is a concurrent process with the packet forwarding process.

Condition and action
If (directed) then do not learn, update, or set touched else continue
If (not (Learning or Forwarding) or (ENABLE_AUTH_MODE) or (packet error) or (NO_LEARN)) then do not learn address
if ((Non-tagged packet) and (DROP_UNTAGGED)) then do not learn address
if ((VLAN_AWARE) and (VLAN not found) and (unknown VLAN_MEMMBER_LIST = “000”)) then do not learn address
if ((VID_INGRESS_CHECK) and (Rx port is not VLAN member) and (VLAN found)) then do not learn address
if ((source address found) and (receive port_number != PORT_NUMBER) and (SECURE or BLOCK)) then do not update address else continue
if ((source address found) and (receive port number != PORT_NUMBER)) then update address else continue
if ((source address not found) and (VLAN_AWARE) and not (LEARN_NO_VID)) then learn address with VLAN
if ((source address not found) and ((not VLAN_AWARE) or (VLAN_AWARE and LEARN_NO_VID))) then learn address without VLAN

11.2.1.4.5.1.11.5.2 Updating Process

Condition and action
if (dlr_unicast) then do not update address
If (not(Learning or Forwarding) or (ENABLE_AUTH_MODE) or (packet error) or (NO_SA_UPDATE)) then do not update address

Copyright © 2025 Texas Instruments Incorporated

if ((Non-tagged packet) and (DROP_UNTAGGED)) then do not update address
if ((VLAN_AWARE) and (VLAN not found) and (unknown VLAN_MEMMBER_LIST = “000”)) then do not update address
if ((VID_INGRESS_CHECK) and (Rx port is not VLAN member) and (VLAN found)) then do not update address
if ((source address found) and (receive port number != PORT_NUMBER) and (SECURE or BLOCK)) then do not update address
if ((source address found) and (receive port number != PORT_NUMBER)) then update address

11.2.1.4.5.1.11.5.3 Touching Process

if ((source address found) and (ageable) and (not touched)) then set touched

11.2.1.4.5.2 CPPI CPDMA Host Interface

11.2.1.4.5.2.1 Functional Operation

For legacy reasons this document uses FHost (“cpsw ingress **F**rom **Host**”) interchangeably with host receive and THost (“cpsw egress **T**o **Host**”) interchangeably with host transmit.

Host Software sends and receives network frames via the CPDMA CPPI 3.0 compliant host interface. The host interface includes module registers and host memory data structures. The host memory data structures are buffer descriptors and data buffers. Buffer descriptors are data structures that contain information about a single data buffer. Buffer descriptors may be linked together to describe frames or queues of frames for transmission of data from the host to Ethernet and free buffer queues available for packet data from Ethernet to the host.

After reset, initialization, and configuration the host may initiate CPDMA host interface operations. FHost DMA operations (from host to Ethernet) are initiated by host writes to the appropriate FHost channel head descriptor pointer. The FHost DMA controller then fetches the first packet in the packet chain from memory in accordance with CPPI 3.0 protocol and proceeds with packet operations. The DMA controller fetches the packet data in 64-byte (maximum) bursts.

Host CPDMA THost operations are initiated by host writes to the appropriate THost channel head descriptor pointer after host initialization and configuration. The THost DMA controller writes Ethernet received packet data to external host memory in accordance with CPPI 3.0 protocol.

11.2.1.4.5.2.2 THost CPDMA Interface

The THost DMA (Ethernet to host) is an eight channel CPPI 3.0 compliant interface. Each priority/channel (priority and channel are used interchangeably) has a single queue for frame reception.

11.2.1.4.5.2.2.1 THost CPDMA Host Configuration

To configure the CPDMA for THost operations the host must perform the following:

- Initialize the CPDMA_TH(0..7)_HDP Registers to zero.
- Enable the desired THost interrupts in the CPDMA_TH_INTSTAT_SET register.
- Write the CPDMA_TH_BUFFER_OFFSET register value.
- Setup the channel(s) buffer descriptors in host memory as required by CPPI.
- Enable the CPDMA controller by setting the TH_EN bit in the CPDMA_TH_CONTROL register.

11.2.1.4.5.2.2.2 THost CPDMA Buffer Descriptors

A THost buffer descriptor is a contiguous block of four 32-bit data words aligned on a 32-bit word boundary.

Copyright © 2025 Texas Instruments Incorporated

Table 11-286. THost Buffer Descriptor format

Word Offset	Bit fields																													
	31	30	29	28	27	26	25	24	23	22	21	20	19	18	17	16	15	14	13	12	11	10	9	8	7	6	5	4	3	2	1	0
	next descriptor pointer																															
	buffer pointer																															
	reserved					buffer offset											reserved					buffer length									
	sop	eop	ownership	eoq	teardown_complete	passed_crc	long	short	mac_ctl	overrun	pkt_err	vlan_encap	from_port				ts_encap	memory_protect_err	crc_type	checksum_encap	reserved	packet length									

Field	Description
next_descriptor_pointer	Next Descriptor Pointer - The 32-bit word aligned memory address of the next buffer descriptor in the RX queue. This is the mechanism used to reference the next buffer descriptor from the current buffer descriptor. If the value of this pointer is zero then the current buffer is the last buffer in the queue. The host sets the **next_descriptor_pointer**.
buffer_pointer	Buffer Pointer - The byte aligned memory address of the buffer associated with the buffer descriptor. The host sets the **buffer_pointer**.
buffer_offset	Buffer Offset – Indicates how many unused bytes are at the start of the buffer. The buffer offset is reduced to 12-bits. A value of 0x0000 indicates that there are no unused bytes at the start of the buffer and that valid data begins on the first byte of the buffer. A value of 0x000F (decimal 15) indicates that the first 15 bytes of the buffer are to be ignored by the port and that valid buffer data starts on byte 16 of the buffer. The port writes the **buffer_offset** with the value from the **CPDMA_TH_BUFFER_OFFSET** register value. The host initializes the **buffer_offset** to zero for free buffers. The **buffer_length** must be greater than the **CPDMA_TH_BUFFER_OFFSET** register value. The buffer offset is valid only on **sop**.
buffer_length	Buffer Length – Indicates how many valid data bytes are in the buffer. The buffer length is reduced to 12-bits. Unused or protocol specific bytes at the beginning of the buffer are not counted in the Buffer Length field. The host initializes the **buffer_length**, but the port may overwrite the host initiated value with the actual buffer length value on SOP and/or EOP buffer descriptors. SOP buffer length values will be overwritten if the packet size is less than the size of the buffer or if the offset is nonzero. EOP buffer length values will be overwritten if the entire buffer is not filled up with data. The **buffer_length** must be greater than zero.
sop	Start of Packet - Indicates that the descriptor buffer is the first buffer in the packet. The port sets the **sop** bit. 0 - Not start of packet buffer 1 - Start of packet buffer

Copyright © 2025 Texas Instruments Incorporated

Field	Description
eop	End of Packet - Indicates that the descriptor buffer is the last buffer in the packet. The port sets the **eop** bit. 0 - Not end of packet buffer. 1 - End of packet buffer.
ownership	Ownership - Indicates ownership of the packet and is valid only on **sop**. This bit is set by the host and cleared by the port when the packet has been transferred. The host uses this bit to reclaim buffers. 0 - The packet is owned by the host 1 - The packet is owned by the port
eoq	End Of Queue - Set by the port to indicate that the RX queue empty condition exists. This bit is valid only on **eop**. The port determines the end of queue condition by a zero **next_descriptor_pointer**. 0 – The RX queue has more buffers available for reception. 1 - The Descriptor buffer is the last buffer in the last packet in the queue.
teardown_complete	Teardown Complete – Set by the port to indicate that the host commanded teardown process is complete, and the channel buffers may be reclaimed by the host. This bit is valid only on **sop**. 0 - The port has not completed the teardown process. 1 - The port has completed the commanded teardown process.
passed_crc	Passed CRC – Set by the port to indicate that the CRC was passed with the data. The **Packet_Length** includes the CRC bytes. The **passed_crc** bit is valid only on SOP. The **p0_tx_crc_remove** bit in the **CPDMA_Control** register determines if CPPI THost packets have a CRC included or not.
long	Jabber Frame – Indicates that the frame is a jabber frame and was not discarded because **rx_cef_en** was set in the ingress port **Pn_MAC_Control** register. Valid only on SOP.
short	Fragment Frame – Indicates that the frame is a fragment and was not discarded because **rx_cef_en** was set in the ingress port **Pn_MAC_Control** register. Valid only on SOP.
mac_ctl	Control Frame – Indicates that the frame is a MAC control frame and was not discarded because the **rx_cmf_en** bit was set inthe ingress port **Pn_Mac_Control** register. Valid only on SOP.
overrun	Overrun – Set by the port to indicate that the frame reception was aborted due to THost buffer overrun. This bit is valid only on SOP. 0 – no overrun occurred on the packet 1 – The packet was aborted due to overrun
pkt_error	Packet Contained Error on Ethernet Ingress. This field is valid on SOP. – 00 – no error 01 – CRC error on ingress 10 – Code error on ingress 11 – align error on ingress
vlan_encap	VLAN Encapsulated Packet – Indicates when set that the packet data contains a 32-bit VLAN header word that is included in the packet byte count. This field is set by the port to be the value of the **CPDMA_Control** register **th_vlan_encap** bit. If both **th_vlan_encap** and **th_ts_encap** are set then the VLAN is first. This encapsulated word also contains the ALE classification FLOW (threadval). This bit is valid on SOP.
ts_encap	Timestamp Encapsulated Packet – Indicates when set that the packet data contains a 64-bit timestamp (two 32-bit words with the lower 32-bit word first) that is included in the packet byte count. This field is set by the port to be the value of the **CPDMA_Control** register **th_ts_encap** bit. If both **th_vlan_encap** and **thost_ts_encap** are set then the VLAN is first. This bit is valid on SOP.
chksum_encap	Checksum Encapsulated Packet – Indicates when set that the packet data contains 4-bytes of THost checksum information at the end of the packet (last 4 bytes). The packet length includes the checksum bytes.

Copyright © 2025 Texas Instruments Incorporated

Field	Description
memory_protect_error	Memory Protect Error – An error was detected in the packet Castignoli protect CRC. The Packet should be dropped by the host.
from_port	From Port – Indicates the Ethernet ingress port number. This field is valid only on SOP.
packet_length	Packet Length – Specifies the number of bytes in the entire packet. Offset bytes are not included. The sum of the buffer_length fields should equal the packet_length. Valid only on SOP.

11.2.1.4.5.2.2.3 THost CPDMA Channel Teardown

The host commands a THost channel teardown by writing the channel number to the **CPDMA_TH_TEARDOWN** register. When a teardown command is issued to an enabled THost channel the following will occur:

- Any current frame in reception will complete normally.
- The teardown_complete bit will be set in the next THost buffer descriptor in the chain if there is one.
- The channel head descriptor pointer will be cleared to zero
- A THost interrupt for the channel will be issued to the host.
- The host should acknowledge a teardown interrupt with a 0xfffffffc acknowledge value

Channel teardown may be commanded on any channel at any time. The host is informed of the teardown completion by the set teardown complete buffer descriptor bit. The port does not clear any channel enables due to a teardown command. A teardown command to an inactive channel issues an interrupt that software should acknowledge with a 0xfffffffc acknowledge value (note that there is no buffer descriptor in this case). Software may read the interrupt acknowledge location to determine if the interrupt was due to a commanded teardown. The read value will be 0xfffffffc if the interrupt was due to a teardown command.

11.2.1.4.5.2.3 FHost CPDMA Interface

The FHost DMA is an eight channel CPPI 3.0 compliant interface. Priority between the eight queues may be either fixed or round robin as selected by **FH_PTYPE** in the **CPDMA_Control** register. If the priority type is fixed, then channel 7 has the highest priority and channel 0 has the lowest priority. Round robin priority proceeds from channel 0 to channel 7. Packet Data transfers occur on the TX_VBUSP interface in 64-byte maximum burst transfers. Any packet can be designated by the host to generate a host timesync event on Ethernet egress by setting the **host_event** bit in the packet buffer descriptor.

11.2.1.4.5.2.3.1 FHost CPDMA Host Configuration

To configure the CPDMA for FHost operations the host must do the following:

- Initialize the CPDMA_FH(0..7)_HDP registers to a zero value.
- Enable the desired ingress interrupts in the CPDMA_FH_INTSTAT_MASKED_SET register.
- Setup the transmit channel(s) buffer descriptors in host memory as defined in CPPI 3.0.
- Configure and enable the ingress operation as desired in the CPDMA_FH_Control register.
- Write the appropriate CPDMA_FH(0..7)_HDP registers with the appropriate values to start packet operations.

11.2.1.4.5.2.3.2 FHost CPDMA Buffer Descriptors

An FHost buffer descriptor is a contiguous block of four 32-bit data words aligned on a 32-bit word boundary.

Table 11-287. FHost Buffer Descriptor format

Word Offset	Bit fields																															
	31	30	29	28	27	26	25	24	23	22	21	20	19	18	17	16	15	14	13	12	11	10	9	8	7	6	5	4	3	2	1	0
0	next descriptor pointer																															
1	buffer pointer																															
2	buffer offset																buffer length															

Copyright © 2025 Texas Instruments Incorporated

Table 11-287. FHost Buffer Descriptor format (continued)

3	sop	eop	ownership	eoq	teardown_complete	pass_crc	crc_type	reserved	to_port_en	to_port	host_event	chksum_encap	reserved	packet_length

Name	Description
next_descriptor_pointer	Next Descriptor Pointer - The 32-bit word aligned memory address of the next buffer descriptor in the FHost queue. This is the mechanism used to reference the next buffer descriptor from the current buffer descriptor. If the value of this pointer is zero then the current buffer is the last buffer in the queue. The host sets the **next_descriptor_pointer**.
buffer_pointer	Buffer Pointer - The byte aligned memory address of the buffer associated with the buffer descriptor. The host sets the **buffer_pointer**.
buffer_offset	Buffer Offset – Indicates how many unused bytes are at the start of the buffer. A value of 0x0000 indicates that no unused bytes are at the start of the buffer and that valid data begins on the first byte of the buffer. A value of 0x000F (decimal 15) indicates that the first 15 bytes of the buffer are to be ignored by the port and that valid buffer data starts on byte 16 of the buffer. The host sets the **buffer_offset** value (which may be zero to the buffer length minus 1). Valid only on **sop**.
buffer_length	Buffer Length – Indicates how many valid data bytes are in the buffer. Unused or protocol specific bytes at the beginning of the buffer are not counted in the Buffer Length field. The host sets the **buffer_length.** The **buffer_length** must be greater than zero.
sop	Start of Packet - Indicates that the descriptor buffer is the first buffer in the packet. 0 - Not start of packet buffer 1 - Start of packet buffer
eop	End of Packet - Indicates that the descriptor buffer is the last buffer in the packet. 0 - Not end of packet buffer. 1 - End of packet buffer.
ownership	Ownership - Indicates ownership of the packet and is valid only on **sop**. This bit is set by the host and cleared by the port when the packet has been transferred. The host uses this bit to reclaim buffers. 0 - The packet is owned by the host 1 - The packet is owned by the port
eoq	End Of Queue - Set by the port to indicate that all packets in the queue have been transferred and the FHost queue is empty. End of queue is determined by the port when the **next_descriptor_pointer** is zero on an **eop** buffer. This bit is valid only on **eop**. 0 - The FHost queue has more packets to transfer. 1 - The Descriptor buffer is the last buffer in the last packet in the queue.

Copyright © 2025 Texas Instruments Incorporated

Name	Description
teardown_complete	Teardown Complete – Set by the port to indicate that the host commanded teardown process is complete, and the channel buffers may be reclaimed by the host. This bit is valid only on **sop**. 0 - The port has not completed the teardown process. 1 - The port has completed the commanded teardown process.
crc_type	CRC Type – 0 – Ethernet CRC 1 – Castignoli CRC (if **$CPPI_Cast** = 1)
pass_crc	Pass CRC – Valid only on SOP 0 – A CRC is not included with the packet data. The Ethernet port(s) will generate the CRC on Ethernet egress. A CRC (or placeholder) at the end of the data is allowed, but not required, and the **buffer_count** and **packet_length** fields should not include the CRC bytes if they are present. 1 – A CRC is included with the host packet data. The **packet_length** and **buffer_count** fields should include the four CRC bytes. The host supplied CRC should be in the last four bytes of the data.
to_port	To Port – Port number to send the directed packet to. This field is set by the host. This field is valid on SOP. Directed packets go to the directed port, but an ALE lookup is performed to determine untagged egress in VLAN_AWARE mode. 1 – Send the packet to port 1 if **to_port_en** is asserted. 2 – Send the packet to port 2 if **to_port_en** is asserted.
to_port_en	To Port Enable – Indicates when set that the packet is a directed packet to be sent to the **to_port** field port number. This field is set by the host. The packet is sent to one port only (index not mask). This bit is valid on SOP. 0 – not a directed packet 1 – directed packet
host_event	Host Timesync Event – Generate a host timesync event on Ethernet egress. The upper 28-bits of the packet SOP buffer descriptor address are the domain[7:0], message_type[3:0], and sequence_id[15:0] in that order. 0 – The packet will not generate a host event on Ethernet egress 1 – The packet will generate a host event on Ethernet egress
chksum_encap	Checksum Encapsulated Packet – Indicates when set that the packet data contains 4-bytes of FHost checksum information at the start of the packet (first 4 bytes). The packet length includes the checksum bytes.
packet_length	Packet Length – Specifies the number of bytes in the entire packet. Offset bytes are not included. The sum of the buffer_length fields should equal the packet_length. Valid only on SOP. The packet length must be greater than zero. The packet data will be truncated to the packet length if the packet length is shorter than the sum of the packet buffer descriptor buffer lengths. A host error occurs if the packet length is greater than the sum of the packet buffer descriptor buffer lengths.

11.2.1.4.5.2.3.3 FHost CPDMA Channel Teardown

The host commands a FHost channel teardown by writing the channel number to the **CPDMA_FH_Teardown** register. When a teardown command is issued to an enabled FHost channel the following will occur:

- Any frame currently in transmission will complete normally
- The teardown complete bit will be set in the next sop buffer descriptor (if there is one).
- The channel head descriptor pointer will be set to zero.
- An interrupt will be issued to inform the host of the channel teardown.
- The host should acknowledge a teardown interrupt with a 0xfffffffc acknowledge value

Channel teardown may be commanded on any channel at any time. The host is informed of the teardown completion by the set teardown complete buffer descriptor bit. The port does not clear any channel enables due

Copyright © 2025 Texas Instruments Incorporated

to a teardown command. A teardown command to an inactive channel issues an interrupt that software should acknowledge with a 0xfffffffc acknowledge value (note that there is no buffer descriptor in this case). Software may read the interrupt acknowledge location to determine if the interrupt was due to a commanded teardown. The read value will be 0xfffffffc if the interrupt was due to a teardown command.

11.2.1.4.5.2.4 VLAN Aware Mode

The CPSW is in VLAN aware mode when the CPSW Control register **vlan_aware** bit is set. In VLAN aware mode port 0 THost packets may or may not be VLAN encapsulated depending on the CPDMA_Control register **th_vlan_encap** bit. The header packet VLAN is generated as described in later sections of this specification. VLAN encapsulated receive packets have a 32-bit VLAN header encapsulation word added to the packet data. VLAN encapsulated packets are specified by a set **vlan_encap** bit in the packet buffer descriptor. The VLAN encapsulation header is included in the packet length and has the below format:

32-bit VLAN Header Encapsulation Word																															
31	**30**	**29**	**28**	**27**	**26**	**25**	**24**	**23**	**22**	**21**	**20**	**19**	**18**	**17**	**16**	**15**	**14**	**13**	**12**	**11**	**10**	**9**	**8**	**7**	**6**	**5**	**4**	**3**	**2**	**1**	**0**
hdr_pkt_priority			hdr_pkt_cfi	hdr_pkt_vid												flow						pkt_type		reserved							

Field	Description
hdr_pkt_priority	Header Packet VLAN priority (7 is highest priority)
hrd_pkt_cfi	Header Packet VLAN CFI bit. The
hdr_pkt_vid	Header Packet VLAN ID.
flow	FLOW – A nonzero value indicates that the ALE matched a classifier with the **flow** (threadval).
pkt_type	Packet Type – Indicates whether the packet is a VLAN tagged, priority tagged or non-tagged packet. 00 – VLAN tagged packet 01 – reserved 10 – priority tagged packet 11 – non-tagged packet

11.2.1.4.5.2.5 VLAN Unaware Mode

The CPSW is in VLAN unaware mode when the CPSW Control register **vlan_aware** bit is cleared. Port 0 THost packets (egress) may or may not be VLAN encapsulated depending on the CPSW Control register **th_vlan_encap** bit.

Copyright © 2025 Texas Instruments Incorporated

11.2.1.4.5.2.6 CPDMA Big Endian Mode

When the **CPDMA_BIG_ENDIAN** input is asserted, the CPDMA assumes that packet data is contained in memory in big endian format. When the **CPDMA_BIG_ENDIAN** input is deasserted, the CPDMA assumes that packet data is contained in memory in little endian format. The **CPDMA_BIG_ENDIAN** input causes big endian packet data to go out on the wire in the same order that little endian packet data goes out on the wire when the input is not asserted (byte 0 first). The **CPDMA_ BIG_ENDIAN** input has no effect on buffer descriptor data reads or writes because buffer descriptor data is a 32-bit quantity (unlike packet data which is an 8-bit quantity).

11.2.1.4.5.2.7 CPDMA Command IDLE

The **cmd_idle** bit in the **CPDMA_Control** register allows CPDMA operation to be suspended. When the idle state is commanded, the CPDMA will stop processing THost and FHost frames at the next frame boundary. Any frame currently in reception or transmission will be completed normally without suspension. For FHost, any frame in process will be completed. For THost, frames that are detected by the CPDMA after the suspend state is entered are ignored. No statistics will be kept for ignored frames. Commanded idle is similar in operation to emulation control and clock stop.

11.2.1.4.5.2.8 CPDMA CPPI 3.0 Interface Bandwidth

The HOST CPPI 3.0 FHost and THost interfaces are capable of supporting linerate on the Ethernet ports provided that the clock frequency is sufficient, and provided that the Host master VBUSP read/write latency is low.

11.2.1.4.6 Egress Packet Operations

Each CPSW egress port (Ethernet and Host) is capable of performing egress packet processing operations. **Intra**VLAN processing either adds, removes, or replaces VLAN information or does nothing. **Inter**VLAN routing allows hardware routing between a limited number of VLANs - thereby allowing high-bandwidth or other routing operations to be offloaded from software to the CPSW (hardware). IntraVLAN processing and InterVLAN routing operations are mutually exclusive. In addition, OAM loopback allows the loopback packet source and destination addresses can be swapped on egress to facilitate OAM or generic testing operations.

11.2.1.4.6.1 IntraVLAN Processing

All ports (Ethernet and CPPI) process packet VLAN's identically on cpsw egress. CPSW ingress packet VLAN's are not modified on ingress regardless of the port type or VLAN mode.

11.2.1.4.6.1.1 VLAN Unaware Mode

An egress port is operating in the VLAN unaware mode when the **VLAN_AWARE** bit in the **CPSW_Control** register is cleared to zero. In VLAN unaware mode, transmit (egress) packets are not modified on egress (no IntraVLAN processing).

11.2.1.4.6.1.2 VLAN Aware Mode

An egress port is operating in the VLAN aware mode when the **VLAN_AWARE** bit in the **CPSW_Control** register is set. In VLAN aware mode, transmitted packet data is changed depending on the packet type, the packet priority (**pkt_pri**), and the VLAN information as shown in the below tables. The **vlan_ltype_sel** value is selected by the **s_cn_switch** bit in the **CPSW_Control** register and is either the **vlan_ltype_inner** (0x8100 default)or **vlan_ltype_outer** (0x88a8 default) value. The **force_untagged_egress** bit comes from the Address Lookup Engine (ALE) lookup:

VLAN Aware Mode Non Tagged Transmit Packet Processing	
Insert VLAN Case	Non-tagged input packets have the header packet VLAN inserted when the **force_untagged_egress** bit in the transmit packet header (from the ALE) is de-asserted. **The vlan_ltype_sel** length/type is inserted after the source address followed by the two byte header packet VLAN. The header packet VLAN is composed of the **hdr_pkt_pri**, the **hdr_pkt_cfi**,and the **hdr_pkt_vid**. The packet length/type field is output four bytes later than it is input and is not removed or replaced.
No Change Case	Non tagged input packets are output unchanged when the **force_untagged_egress** transmit packet header bit is asserted.

Copyright © 2025 Texas Instruments Incorporated

VLAN Aware Mode Priority Tagged Transmit Packet Processing	
Replace PRI/VID Case	Priority tagged input packets have the packet VLAN ID (VID) and the packet priority replaced with the **hdr_pkt_vid** and the **hdr_pkt_pri** when the transmit packet header **force_untagged_egress** bit (from the ALE) is de-asserted.
Remove VLAN Case	Priority tagged input packets have the 4-byte packet VLAN information removed when the transmit packet header **force_untagged_egress** bit (from the ALE) is asserted. **The vlan_ltype_sel** length/type is removed as is the two byte packet VLAN. Input 64-67 byte priority tagged packets go out with the VLAN removed and padded to 64-bytes. The input CRC bytes are used as the pad data. Input 64-byte priority tagged packets use all four input CRC bytes as pad, input 65-byte priority tagged packets use three of the input CRC bytes as pad, and so on.

VLAN Aware Mode VLAN Tagged Transmit Packet Processing	
Replace PRI Case	VLAN tagged input packets are output with the packet priority replaced with the **hdr_pkt_pri** when the transmit packet header **force_untagged_egress** bit is de-asserted.
Remove VLAN Case	VLAN tagged input packets have the 4-byte packet VLAN information removed when the transmit packet header **force_untagged_egress** bit is asserted. **The vlan_ltype_sel** length/type is removed as is the two byte packet VLAN. Input 64-67 byte VLAN tagged packets go out with the VLAN removed and padded to 64-bytes. The input CRC bytes are used as the pad data. Input 64-byte VLAN tagged packets use all four input CRC bytes as pad, input 65-byte VLAN tagged packets use three of the input CRC bytes as pad, and so on. The output CRC is generated when the VLAN is removed.

VLAN tagged ingress packets of 64 to 67-bytes will be padded to 64-bytes on egress (Ethernet and CPPI port egress) if the VLAN is to be removed on egress.

11.2.1.4.6.2 ALE Egress Opcode Operations

The Address Lookup Engine (ALE) can be setup to pass an 8-bit opcode to the destination port(s) egress packet processing logic. InterVLAN routing and OAM Source/Destination address swap are supported operation codes as shown in the below table.

ALE Egress OP Code	Egress Operation
0x00	No egress opcode (NOP)
0x01	InterVLAN (route) opcode 1
0x02	InterVLAN (route) opcode 2
0x03	InterVLAN (route) opcode 3
0x04	InterVLAN (route) opcode 4
0x05-0xFE	reserved
0xFF	DA/SA Swap opcode

11.2.1.4.6.2.1 InterVLAN Routing

The CPSW is capable of InterVLAN routing with a limited number of routes (InterVLAN opcode 1 to 4). The Address Lookup Engine (ALE) determines an InterVLAN egress opcode for each packet to be VLAN routed via a classifier/policer configured for the route. Non VLAN routed packets do not have an InterVLAN (egress) opcode. The ALE classifier/policer can use the ingress packet destination address, source address, VLAN, IPDA, and/or IPSA to determine if a packet is to be VLAN routed or not. If a packet is to be routed, then the InterVLAN opcode is used on Ethernet packet egress with a total of 4 available VLAN routes (opcodes) per egress port. Each InterVLAN routing opcode contains the below fields in the opcode's associated **Pn_InterVLAN_OPX_x** registers (where **x** = A to D):

Field	Description
da[47:0]	Destination Address
sa[47:0]	Source Address
vid[11:0]	VLAN ID

Copyright © 2025 Texas Instruments Incorporated

Field	Description
replace_da_sa	When set, the routed packet Destination Address is replaced with **da[47:0]** and the packet Source Address is replaced with **sa[47:0]** from InterVLAN opcode x (the selected egress opcode).
replace_vid	When set, Replace the packet VLAN ID with **vid[11:0]** from InterVLAN opcode x (the selected egress opcode).
dest_force_untagged_egress	Remove the VLAN on the egress routed packet when set (associated with the destination VLAN). **Note** The ALE **force_untagged_egress** bit from the ALE is for the source VLAN and is ignored for an InterVLAN routed packet. On InterVLAN routed packets this bit is used because it is associated with the destination vlan. This **dest_force_untagged_egress** bit would not be set by software if the destination VLAN is different from the port VLAN since that might cause leaky VLANs.
decrement_ttl	When set, the Time To Live (TTL) field in the header is decremented: • IPV4 – Decrement the TTL byte and update the Header Checksum • IPV6 – Decrement the Hop Limit. note: The ALE will send any IPv4/6 packet with a zero or one TTL field to the host. When this bit is cleared the TTL/Hop Limit fields are not checked or modified.

11.2.1.4.6.2.2 OAM Source and Destination Address Swap

To facilitate OAM or generic testing, the ALE can be configured to loopback packets from Ethernet receive to Ethernet Transmit. Packets destined for OAM loopback have only the source address and destination addresses swapped. No other egress processing is performed. The ALE does not perform lookups for a port in OAM loopback mode, but directed packets are transferred as normal.

11.2.1.4.7 IEEE 1588 Clock Synchronization Support

The CPSW supports 1588 clock synchronization (annex D, annex E, and annex F). Ethernet GMII Transmit and receive time sync operation are supported. Time sync is double-step on egress but may be single-step on ingress.

11.2.1.4.7.1 1588 Receive (Ingress) Packet Operation

There are two CPSW egress time sync interfaces for each Ethernet port. The first is the TS_RX_MII interface and the second is the TS_RX_DEC interface. Both interfaces are generated in the switch and are input to the CPTS module. There are register bits in the CPSW that control time sync operations in addition to the registers in the CPTS module. The TS_RX_MII interface issues a record signal along with a handle to the CPTS controller for each packet that is received. The record signal is a single clock pulse indicating that a receive packet has been detected at the associated port MII interface. The handle value is incremented with each packet and rolls over to zero after 15. There are 16 possible handle values so there can be a maximum of 16 packets “in flight” from the TS_RX_MII to the TS_RX_DEC block at any given time. A handle value is reused (not incremented) for any received packet that is shorter than about 31 octets (including preamble). Handle reuse on short packets prevents any possible overrun condition if multiple fragments are consecutively received. The TS_RX_MII logic is in the receive wireside clock domain. There is no decode logic in the TS_RX_MII to determine if the packet is a time sync event packet or not. Each received packet generates a record signal and new handle. The handle is sent to the CPTS controller with the record pulse and the handle is also sent to the TS_RX_DEC block along with the packet. The packet decode is performed in the TS_RX_DEC block. The decode function is separated from the record function because in some systems the incoming packet can be encrypted. The decode function would be after packet decryption in those systems.

The TS_RX_DEC function decodes each received packet and determines if the packet meets the time sync event packet criteria. If the packet is determined to be a time sync event packet, then the time sync event is

Copyright © 2025 Texas Instruments Incorporated

signaled to the CPTS controller via the TS_RX_DEC interface. If the packet is determined to be a time sync event packet and if the ALE did not drop the packet (the packet was to be sent to at least one port), then the ALE lookup is overridden and the packet is forced only to the host. The event signal is a single clock pulse indicating that the packet matched the time sync event packet criteria and that the associated packet handle, message type, and sequence ID are valid. No indication is given for received packets that do not meet the time sync event criteria. The 16-bit sequence ID is found in the time sync event packet at the sequence ID offset into the PTP message header (**pn_ts_seq_id_offset**). The 8-bit domain number is found in the time sync event packet at the domain offset into the PTP message header (**pn_ts_domain_offset**). A packet is determined to be a receive event packet under the following conditions.

Note

TS_RX_DEC and TS_RX_MII are internal interfaces that have no registers. They are included here for description purposes only.

11.2.1.4.7.1.1 Annex D (IPv4)

1. Receive annex D time sync is enabled (pn_ts_rx_annex_d_en is set in the Pn_TS_Ctl register).
2. One of the sequences below is true.
   - The first packet LTYPE matches 0x0800
   - The first packet LTYPE matches ts_vlan_ltype1 and ts_rx_vlan_ltype1_en is set and the second packet LTYPE matches 0x0800
   - The first packet LTYPE matches ts_vlan_ltype2 and ts_rx_vlan_ltype2_en is set and the second packet LTYPE matches 0x0800
   - The first packet LTYPE matches ts_vlan_ltype1 and ts_rx_vlan_ltype1_en is set and the second packet LTYPE matches ts_vlan_ltype2 and ts_rx_vlan_ltype2_en is set and the third packet LTYPE matches 0x0800
3. Byte 14 (the byte after the LTYPE) contains 0x45 (IP_VERSION). Note that the byte numbering assumes that there are no VLANs. The byte number is intended to show the relative order of the bytes.
4. Byte 20 contains 0bXXX00000 (5 lower bits zero) and Byte 21 contains 0x00 (fragment offset zero)
5. Byte 22 contains 0x01 (HOP Limit = 1) if the ts_ttl_nonzero bit in the switch Pn_TS_CTL_LTYPE2 register is zero, or byte 22 contains any value if ts_ttl_nonzero is set. Byte 22 is the TTL/HOP field.
6. Byte 23 contains 0x11 (Next Header UDP Fixed).
7. The ts_uni_en bit in the Pn_TS_Ctl_Ltype2 register is zero and Bytes 30 through 33 contain:
   - Decimal 224.0.1.129 and the ts_129 bit in the Pn_TS_Ctl_Ltype2 register is set, or
   - Decimal 224.0.1.130 and the ts_130 bit in the Pn_TS_Ctl_Ltype2 register is set, or
   - Decimal 224.0.1.131 and the ts_131 bit in the Pn_TS_Ctl_Ltype2 register is set, or
   - Decimal 224.0.1.132 and the ts_132 bit in the Pn_TS_Ctl_Ltype2 register is set, or
   - Decimal 224.0.0.107 and the ts_107 bit in the Pn_TS_Ctl_Ltype2 register is set

   Or:

   The ts_uni_en bit in the Pn_TS_Ctl_Ltype2 register is set and Bytes 30 through 33 contain any values.
8. Bytes 36 and 37 contain:
   - Decimal 0x01 and 0x3f respectively and the ts_319 bit in the Pn_TS_Ctl_Ltype2 register is set, or
   - Decimal 0x01 and 0x40 respectively and the ts_320 bit in the Pn_TS_Ctl_Ltype2 register is set.
9. The PTP message begins in byte 42.
10. The packet message type is enabled in the ts_msg_type_en field in Pn_TS_Ctl.
11. The packet was received without error (not long/short/mac_ctl/crc/code/align).

11.2.1.4.7.1.2 Annex E (IPv6)

1. Receive annex E time sync is enabled (pn_ts_rx_annex_e_en is set in the switch Pn_TS_Ctl register).
2. One of the sequences below is true.
   - The first packet LTYPE matches 0x86dd.
   - The first packet LTYPE matches ts_vlan_ltype1 and ts_rx_vlan_ltype1_en is set and the second packet LTYPE matches 0x86dd.

Copyright © 2025 Texas Instruments Incorporated

- The first packet LTYPE matches ts_vlan_ltype2 andts_rx_vlan_ltype2_en is set and the second packet LTYPE matches 0x86dd.
- The first packet LTYPE matches ts_vlan_ltype1 and ts_rx_vlan_ltype1_en is set and the second packet LTYPE matches ts_vlan_ltype2 and ts_rx_vlan_ltype2_en is set and the third packet LTYPE matches 0x86dd.

3. Byte 14 (the byte after the LTYPE) contains 0x6X (IP_VERSION in most significant nibble).
4. Byte 20 contains 0x11 (UDP Fixed Next Header).
5. Byte 21 contains 0x01 (HOP Limit = 1) if the ts_ttl_nonzero bit in the switch Pn_TS_Ctl_LType2 register is zero, or byte 21 contains any value if ts_ttl_nonzero is set. Byte 21 is the TTL/HOP field.
6. The ts_uni_en bit in the Pn_TS_Ctl_Ltype2 register is zero and Bytes 38 through 53 contain:
   - FF0M:0:0:0:0:0:0:0181 and the ts_129 bit in the Pn_TS_Ctl_Ltype2 register is set, or
   - FF0M:0:0:0:0:0:0:0182 and the ts_130 bit in the Pn_TS_Ctl_Ltype2 register is set, or
   - FF0M:0:0:0:0:0:0:0183 and the ts_131 bit in the Pn_TS_Ctl_Ltype2 register is set, or
   - FF0M:0:0:0:0:0:0:0184 and the ts_132 bit in the Pn_TS_Ctl_Ltype2 register is set, or
   - FF0M:0:0:0:0:0:0:006B and the ts_107 bit in the Pn_TS_Ctl_Ltype2 register is set (all values above are 16-bit hex numbers with M is enabled in the ts_mcast_type_en field in the Pn_TS_Ctl2 register.

   Or:

   The ts_uni_en bit in the Pn_TS_Ctl_Ltype2 register is set and Bytes 38 through 53 contain any value.
7. Bytes 56 and 57 contain (UDP Header in bytes 54 through 61):
   - Decimal 0x01 and 0x3f respectively and the ts_319 bit in the Pn_TS_Ctl_Ltype2 register is set, or
   - Decimal 0x01 and 0x40 respectively and the ts_320 bit in the Pn_TS_Ctl_Ltype2 register is set.
8. The PTP message begins in byte 62.
9. The packet message type is enabled in the ts_msg_type_en field in Pn_TS_Ctl.
10. The packet was received without error (not long/short/mac_ctl/crc/code/align).

11.2.1.4.7.1.3 Annex F (IEEE 802.3)

1. Receive Annex F time sync is enabled (ts_rx_annex_f_en is set in the switch Pn_TS_Ctl register).
2. One of the sequences below is true.
   - The first packet LTYPE matches ts_ltype1. LTYPE 1 should be used when only one time sync LTYPE is to be enabled.
   - The first packet LTYPE matches ts_ltype2 and ts_ltype2_en is set
   - The first packet LTYPE matches ts_vlan_ltype1 and ts_rx_vlan_ltype1_en is set and the second packet LTYPE matches pn_ts_ltype1
   - The first packet LTYPE matches ts_vlan_ltype1 and ts_rx_vlan_ltype1_en is set and the second packet LTYPE matches ts_ltype2 and ts_ltype2_en is set
   - The first packet LTYPE matches ts_vlan_ltype2 and ts_rx_vlan_ltype2_en is set and the second packet LTYPE matches pn_ts_ltype1
   - The first packet LTYPE matches ts_vlan_ltype2 and ts_rx_vlan_ltype2_en is set and the second packet LTYPE matches ts_ltype2 and ts_ltype2_en is set
   - The first packet LTYPE matches ts_vlan_ltype1 and ts_rx_vlan_ltype1_en is set and the second packet LTYPE matches ts_vlan_ltype2 and ts_tx_vlan_ltype2_en is set and the third packet LTYPE matches pn_ts_ltype1
   - The first packet LTYPE matches ts_vlan_ltype1 and ts_rx_vlan_ltype1_en is set and the second packet LTYPE matches ts_vlan_ltype2 and ts_rx_vlan_ltype2_en is set and the third packet LTYPE matches ts_ltype2 and ts_ltype2_en is set
3. The PTP message begins in the byte after the LTYPE.
4. The packet message type is enabled in the ts_msg_type_en field in the Pn_TS_Ctl register.
5. The packet was received without error (not long/short/mac_ctl/crc/code/align).

Copyright © 2025 Texas Instruments Incorporated

11.2.1.4.7.2 1588 Transmit Packet Operation

There are two CPSW transmit time sync interfaces for each Ethernet port. The first is the TS_TX_DEC interface and the second is the TS_TX_MII interface. Both interfaces are internal to the cpsw and are input to the CPTS module.

The TS_TX_DEC function decodes each packet to be transmitted and determines if the packet meets the time sync event packet criteria. If the packet is determined to be a time sync event packet, then the time sync event is signaled to the CPTS controller via the TS_TX_DEC interface (**pn_ts_tx_dec_evnt**, **pn_ts_tx_dec_hndl[3:0]**, **pn_ts_tx_dec_msg_type[3:0], pn_ts_tx_dec_seq_id[15:0]** and **pn_ts_rx_dec_domain[7:0]**). The event signal is a single clock pulse indicating that the packet matched the time sync event packet criteria and that the associated packet handle, message type, and sequence ID are valid. The 16-bit sequence ID is found in the time sync event packet at the sequence ID offset into the message header (**pn_ts_seq_id_offset**). The 8-bit domain number is found in the time sync event packet at the domain offset into the PTP message header (**pn_ts_domain_offset**). No indication is given for transmit packets that do not meet the time sync event criteria. The time sync event packet handle is also passed along with the packet to the TS_TX_MII with an indication that the packet is a time sync event packet. Unlike receive; only transmit event packets increment the handle value. The decode function is separated from the record function because some systems may encrypt the packet. The encryption is after the decode function on transmit (egress). A packet is determined to be a transmit event packet under the following conditions.

11.2.1.4.7.2.1 Annex D (IPv4)

1. Transmit time sync is enabled (ts_tx_annex_d_en is set in the switch Pn_TS_Ctl register).
2. One of the sequences below is true.
   - The first packet LTYPE matches 0x0800
   - The first packet LTYPE matches ts_vlan_ltype1 and ts_tx_vlan_ltype1_en is set (PN_TS_VLAN_LTYPE register) and the second packet LTYPE matches 0x0800
   - The first packet LTYPE matches ts_vlan_ltype2 and ts_tx_vlan_ltype2_en is set and the second packet LTYPE matches 0x0800
   - The first packet LTYPE matches ts_vlan_ltype1 and ts_tx_vlan_ltype1_en (PN_TS_CTL_REG) is set and the second packet LTYPE matches ts_vlan_ltype2 and ts_tx_vlan_ltype2_en is set and the third packet LTYPE matches 0x0800
3. Byte 14 (the byte after the LTYPE) contains 0x45 (IP_VERSION). Note that the byte numbering assumes that there are no VLANs. The byte number is intended to show the relative order of the bytes. If VLAN(s) are present then the byte numbers push down.
4. Byte 20 contains 0bXXX00000 (5 lower bits zero) and Byte 21 contains 0x00 (fragment offset zero)
5. Byte 22 contains 0x01 (HOP Limit = 1) if the ts_ttl_nonzero bit in the switch Pn_TS_Ctl_LType2 register is zero, or byte 22 contains any value if ts_ttl_nonzero bit is set. Byte 22 is the TTL/HOP field.
6. Byte 23 contains 0x11 (Next Header UDP Fixed).
7. The pn_ts_uni_en bit in the Pn_TS_Ctl_Ltype2 register is zero and bytes 30 through 33 contain:
   - Decimal 224.0.1.129 and the ts_129 bit in the Pn_TS_Ctl_Ltype2 register is set, or
   - Decimal 224.0.1.130 and the ts_130 bit in the Pn_TS_Ctl_Ltype2 register is set, or
   - Decimal 224.0.1.131 and the ts_131 bit in the Pn_TS_Ctl_Ltype2 register is set, or
   - Decimal 224.0.1.132 and the ts_132 bit in the Pn_TS_Ctl_Ltype2 register is set, or
   - Decimal 224.0.0.107 and the ts_107 bit in the Pn_TS_Ctl_Ltype2 register is set

   Or:

   The ts_uni_en bit in the Pn_TS_Ctl_Ltype2 register is set and Bytes 30 through 33 contain any values.
8. Bytes 36 and 37 contain:
   - Decimal 0x01 and 0x3f respectively and the ts_319 bit in the Pn_TS_CTL_Ltype2 register is set, or
   - Decimal 0x01 and 0x40 respectively and the ts_320 bit in the Pn_TS_CTL_Ltype2 register is set.
9. The PTP message begins in byte 42 (this is offset 0).
10. The packet message type is enabled in ts_msg_type_en field in the Pn_TS_Ctl register.
11. The packet was sent by the host (port 0).

Copyright © 2025 Texas Instruments Incorporated

11.2.1.4.7.2.2 Annex E (IPv6)

1. Transmit annex E time sync is enabled (ts_tx_annex_e_en is set in the Pn_TS_Ctl register).
2. One of the sequences below is true.
   - The first packet LTYPE matches 0x86dd.
   - The first packet LTYPE matches ts_vlan_ltype1 and ts_tx_vlan_ltype1_en is set and the second packet LTYPE matches 0x86dd.
   - The first packet LTYPE matches ts_vlan_ltype2 and ts_tx_vlan_ltype2_en is set and the second packet LTYPE matches 0x86dd.
   - The first packet LTYPE matches ts_vlan_ltype1 and ts_tx_vlan_ltype1_en is set and the second packet LTYPE matches ts_vlan_ltype2 and ts_tx_vlan_ltype2_en is set and the third packet LTYPE matches 0x86dd.
3. Byte 14 (the byte after the LTYPE) contains 0x6X (IP_VERSION in most significant nibble).
4. Byte 20 contains 0x11 (UDP Fixed Next Header).
5. Byte 21 contains 0x01 (HOP Limit = 1) if the ts_ttl_nonzero bit in the switch Pn_TS_Ctl_LType2 register is zero, or byte 21 contains any value if ts_ttl_nonzero is set. Byte 21 is the TTL/HOP field.
6. The ts_uni_en bit in the Pn_TS_Ctl_Ltype2 register is zero and Bytes 38 through 53 contain:
   - FF0M:0:0:0:0:0:0:0181 and the ts_129 bit in the Pn_TS_Ctl_Ltype2 register is set, or
   - FF0M:0:0:0:0:0:0:0182 and the ts_130 bit in the Pn_TS_Ctl_Ltype2 register is set, or
   - FF0M:0:0:0:0:0:0:0183 and the ts_131 bit in the Pn_TS_Ctl_Ltype2 register is set, or
   - FF0M:0:0:0:0:0:0:0184 and the ts_132 bit in the Pn_TS_Ctl_Ltype2 register is set, or
   - FF0M:0:0:0:0:0:0:006B and the ts_107 bit in the Pn_TS_Ctl_Ltype2 register is set (all values above are 16-bit hex numbers with M is enabled in the ts_mcast_type_en field in the Pn_TS_Ctl2 register.

   Or:

   The pn_ts_uni_en bit in the Pn_TS_Ctl_Ltype2 register is set and Bytes 38 through 53 contain any value.
7. Bytes 56 and 57 contain (UDP Header in bytes 54 through 61):
   - Decimal 0x01 and 0x3f respectively and the ts_319 bit in the Pn_TS_Ctl_Ltype2 register is set, or
   - Decimal 0x01 and 0x40 respectively and the ts_320 bit in the Pn_TS_Ctl_Ltype2 register is set.
8. The PTP message begins in byte 62.
9. The packet message type is enabled in the ts_msg_type_en field in Pn_TS_Ctl.
10. The packet was sent by the host (port 0).

11.2.1.4.7.2.3 Annex F (IEEE 802.3)

1. Transmit time sync is enabled (ts_tx_annex_f_en is set in the switch Pn_TS_Ctl register).
2. One of the sequences below is true.
   - The first packet LTYPE matches ts_ltype1. LTYPE 1 should be used when only one time sync LTYPE is to be enabled.
   - The first packet LTYPE matches ts_ltype2 and ts_ltype2_en is set
   - The first packet LTYPE matches ts_vlan_ltype1 and ts_tx_vlan_ltype1_en is set and the second packet LTYPE matches pn_ts_ltype1
   - The first packet LTYPE matches ts_vlan_ltype1 and ts_tx_vlan_ltype1_en is set and the second packet LTYPE matches ts_ltype2 and ts_ltype2_en is set
   - The first packet LTYPE matches ts_vlan_ltype2 and ts_tx_vlan_ltype2_en is set and the second packet LTYPE matches pn_ts_ltype1
   - The first packet LTYPE matches ts_vlan_ltype2 and ts_tx_vlan_ltype2_en is set and the second packet LTYPE matches ts_ltype2 and ts_ltype2_en is set
   - The first packet LTYPE matches ts_vlan_ltype1 and ts_tx_vlan_ltype1_en is set and the second packet LTYPE matches ts_vlan_ltype2 and ts_tx_vlan_ltype2_en is set and the third packet LTYPE matches pn_ts_ltype1
   - The first packet LTYPE matches ts_vlan_ltype1 and ts_tx_vlan_ltype1_en is set and the second packet LTYPE matches ts_vlan_ltype2 and ts_tx_vlan_ltype2_en is set and the third packet LTYPE matches ts_ltype2 and ts_ltype2_en is set
3. The packet message type is enabled in the ts_msg_type_en field in the Pn_TS_Ctl register.

Copyright © 2025 Texas Instruments Incorporated

4. The packet was sent by the host (port 0).

The TS_TX_MII interface issues a single clock record signal at the beginning of each transmitted packet. If the packet is a time sync event packet then a single clock event signal along with a handle will be issued before the next record signal for the next packet. The event signal will not be issued for packets that did not meet the time sync event criteria in the TS_TX_DEC function. If consecutive record indications occur without an interleaving event indication, then the packet associated with the first record was not a time sync event packet. The record signal is a single clock pulse indicating that a transmit packet egress has been detected at the associated port MII interface. The handle value is incremented with each time sync event packet and rolls over to zero after 7. There are 8 possible handle values so there can be a maximum of 8 time sync event packets “in flight” from the TS_TX_DEC to the TS_TX_MII block at any given time. The handle value increments only on time sync event packets. The TS_TX_MII logic is in the transmit wireside clock domain.

Note

TS_TX_DEC and TS_TX_MII are internal interfaces that have no registers. They are included for description purposes only.

11.2.1.4.8 Rate Limiting (Traffic Shaping) (P802.1Qav/D6.0)

Rate-limit mode is intended to allow some CPPI ingress channels and some Ethernet transmit (switch egress) priorities to be rate-limited. Non rate-limited traffic (bulk traffic) is allowed on lower priority non rate-limited channels and FIFO priorities. Rate-limited traffic must be configured to be sent to rate-limited queues (via packet priority handling). The allocated rates for rate-limited traffic must not be oversubscribed. For example, if port 1 is sending 15% rate limited traffic to port 2 priority 3, and port 0 is also sending 10% rate-limited traffic to port 2 priority 3, then the port 2 priority 3 egress rate must be configured to be 25% plus a percent or two for margin. The switch must be configured to allow some percentage of non rate-limited traffic. Non rate-limited traffic must be configured to be sent to non rate-limited queues. No packets from the host should be dropped, but non rate-limited Ethernet ingress traffic can be dropped. For rate limited priorities, the configured transfer rate includes the committed information rate and the excess information rate. The excess information rate will only be attempted to be sent when there is no packet backlog on every priority that does not have the excess information rate enabled. The committed information rate will be sent regardless of network traffic as long as the configuration is not oversubscribed. The excess information rate will be sent only when network conditions allow.

Credit Based Shaper (CBS)

CBS based traffic shaping is supported in the CPSW IP and can be enabled by either configuring it in the ***committed information rate*** register either in the CPPI port ingress or in the Ethernet port transmit. If the rate limiting is applied at the CPPI port ingress, then the CPDMA makes sure to transmit the data at the limited rate. If it is configured at the Ethernet port end the burst data may be buffered in the Ethernet FIFO before transmitting, care must be taken such that Ethernet FIFO does not overflow when rate limiting is set in Ethernet port.

The relation between CBS parameters and hardware register configuration is as follows:

- idleSlope is essentially the rate limit, i.e. idleSlope = CIR (committed information rate) in Mbps
- portTransmitRate is link speed or port speed which is 100Mbps
- sendSlope is calculated as, sendSlope = idleSlope - portTransmitRate (this is described in the spec)
- hicredit and locredit : credit is calculated based on the idleSlope and sendSlope, it is maintained internally in the hardware, this is not a configurable parameter to the user.

11.2.1.4.8.1 CPPI Port Ingress Rate Limiting

Port 0 FHost operations can be configured to rate limit the packet data for each channel (priority). FHost has 8 priorities for QOS. There is a committed information rate (**P0_Pri_CIR**) and an excess information rate for each priority (**P0_Pri_EIR**). Rate limiting is enabled for a priority when the committed information rate for the priority is non-zero. The excess information rate for a priority is enabled when the excess information rate for the priority is non-zero. The committed information rate must be non-zero if the excess information rate is configured to be non-zero. That is, there must be a configured non-zero committed information rate for there to

Copyright © 2025 Texas Instruments Incorporated

be a configured non-zero excess information rate. Bulk traffic on other non-rate limited priorities does not impact the committed information traffic on a priority. However, bulk traffic on other non-rate limited priorities does impact the excess information rates. No bulk priority will be enabled to send unless there are **tx_host_blks_rem** number of unused blocks remaining in each of the Ethernet port transmit FIFOs. The “blocks remaining check” ensures that bulk traffic from the host will not block rate-limited traffic from the host. Rate limited channels must be the highest priority channels. For example, if two rate limited channels are required then priorities 7 and 6 should be configured for committed information (and excess information if desired). When any channels are configured to be rate-limited, the ingress priority type must be fixed. Round-robin priority type is not allowed when rate-limiting is configured for any priority. The configured transfer rate includes the inter-packet gap (12 bytes) and the preamble (8 bytes). The rate in Mbits/second for each priority is controlled by the below equation. If the configured excess information rate is zero, then only the committed information rate is transferred:

Priority Transfer rate in Mbit/s = ((((Frequency in MHZ) * **P0_Pri_CIR**) / 32768) + (((Frequency in MHZ) * **P0_PriX_EIR**) / 32768))

Where the frequency is the **VBUSP_GCLK** frequency (350 for 350Mhz) and priX = pri0 to pri7. For example, 10Mbps on priority 7 would give the below:

10Mbps = ~ ((350 * 936) / 32768), at 350Mhz and **p0_pri7_cir** value = 936 (no excess information rate)

11.2.1.4.8.2 Ethernet Port Transmit Rate Limiting

Ethernet port transmit operations can be configured to rate limit egress data for each egress priority. There is a committed information rate (**Pn_PriX_CIR**) and an excess information rate for each priority (**Pn_PriX_EIR**). Rate limiting is enabled for a priority when the committed information rate for the priority is non-zero. The excess information rate for a priority is enabled when the excess information rate for the priority is non-zero. The committed information rate must be non-zero if the excess information rate is configured to be non-zero. That is, there must be a configured non-zero committed information rate for there to be a configured non-zero excess information rate. Bulk traffic on other non-rate limited priorities does not impact the committed information traffic on a priority. However, bulk traffic on other non-rate limited priorities does impact the excess information rates. Rate limited channels must be the highest priority channels. For example, if two rate limited channels are required then priorities 7 and 6 should be configured for committed information (and excess information if desired). The configured transfer rate includes the inter-packet gap (12 bytes) and the preamble (8 bytes). The rate in Mbits/second that each priority is configured to send is controlled by the below equation. If the excess information rate is disabled then the committed information rate only is transferred:

Priority Transfer rate in Mbit/s = ((((Frequency in MHZ) * **Pn_PriX_CIR**) / 32768) + (((Frequency in MHZ) * **Pn_PriX_EIR**) / 32768))

Where the frequency is the **VBUSP_GCLK** frequency (350 for 350Mhz) and priX = pri0 to pri7. For example, 100Mbps on priority 7 would give the below:

100Mbps = ~ ((350 * 9360) / 32768), at 350Mhz and **pn_pri7_cir** value = 9360, with no excess information rate.

11.2.1.4.9 Transmit Priority Escalation

Bulk (non rate limited) traffic can be escalated in order to preclude starvation of lower bulk traffic priorities from higher bulk traffic priorities. Escalation is configured and enabled in the **PTYPE** register with the **pn_ptype_esc** and **esc_pri_ld_val** fields. Escalation can be enabled with rate limited priorities. The rate limited priorities are on the upper priorities starting with priority 7 and going down(consecutively), and therefore, the escalated priorities are on the lower bulk priorities.

11.2.1.4.10 Enhanced Scheduled Traffic (EST – P802.1Qbv/D2.2)

11.2.1.4.10.1 EST Overview

- When enabled and configured, EST allows express queue traffic to be scheduled (placed) on the wire at specific repeatable time intervals.

Copyright © 2025 Texas Instruments Incorporated

- EST operates on a repeating time interval generated by the CPTS EST function generator. For example, a 125us repeating time interval can be configured.
- Each Ethernet port has 128 EST fetch commands maximum in the global EST fetch RAM.
- Each 22-bit fetch command consists of a 14-bit fetch count (14 msb's) and an 8-bit priority fetch allow (8 lsb's) that will be applied for the fetch count time in wireside clocks.
- The configured port fetch commands are executed in sequence, beginning at port address zero each time through the time interval beginning at cycle start.
- EST allows non-scheduled express and prempt queue traffic to be cleared from the wire to ensure that the scheduled traffic is transmitted at the proper time (wire clear is performed with zero allow).
- EST can be used with or without premption. The pn_mac_prempt[7:0] value determines whether the priority is enabled on the express or prempt queue. Whether a priority is on the express or prempt queue only effects the wire clear time from an EST operation perspective.
- Software should not move priorities to the prempt queue unless preemption is configured, enabled, and verified - allowing preemption to occur.
- Express packet time stamp events can be enabled to assist software in configuring and timing EST operations.

11.2.1.4.10.2 EST Fetch RAM

- The EST fetch RAM is read/write in the CPSW configuration address space.
- Each Ethernet transmit port has 128 locations in the global EST fetch RAM.
  - Ethernet port 1 has EST fetch RAM addresses 0x000-0x1ff.
  - Ethernet port 2 has EST fetch RAM addresses 0x200-0x3ff, and so on.
- One buffer operation – When est_onebuf is set, the 128 port locations operate as one buffer. The est_bufact bit in Pn_FIFO_Status is the upper address bit of the port's fetch RAM address indicating whether operation is currently in the upper or lower 64 locations of the port's fetch RAM.
- Two buffer operation - When est_onebuf of PN_EST_CONTROL register is cleared there are two 64-location buffers with est_bufsel selecting the buffer to be used. When the buffer is switched by changing the est_bufsel value, the actual switch occurs on cycle start. The actual buffer being used is indicated by the est_bufact bit in Pn_FIFO_Status. Software should avoid writing the switched out buffer fetch RAM locations until it detects that the actual switch has occurred.
- The first address location in the port's fetch RAM space (location zero) is read at the beginning of each EST time interval (cycle start). Addresses are then read in ascending order for the duration of the interval. The port's address zero location is then read again at the beginning of the next cycle repeating the time interval packet operations.

11.2.1.4.10.3 EST Time Interval

- Each Ethernet port has an EST function (ESTF) generator in the CPTS submodule.
- The EST function generator generates the EST time interval as a configured number of CPTS reference clocks (CPTS_RCLK).
- The EST function generator rising edge is the cycle start time and the cycle repeats (cycle start occurs) after every time interval.
- The first fetch allow (8 lsb's of the fetch command from the EST fetch RAM) value is at the port's base address zero in the EST fetch RAM and is actually applied 16 wireside clocks after cycle start. The 16 clock delay allows the first fetch value to be fetched from the EST fetch RAM (prefetch time at cycle start).
- Each successive fetch allow is applied for the associated fetch count thereafter. The minimum non-zero fetch count is 16. The minimum value of 16 guarantees that the next fetch value has time to be fetched before the current fetch count is over. There are 64 maximum fetch values when est_onebuf=0, and 128 maximum fetch values when est_onebuf=1.
- The next cycle start then causes the fetch to once again start at the port's address zero location.

11.2.1.4.10.4 EST Fetch Values

- The 22-bit fetch value is made up of the 14-bit fetch count and the 8-bit fetch allow.
- The fetch time indicates the number of wireside clocks that the fetch allow will be active.
- The fetch count is in Ethernet wireside clocks which is bytes in gigabit mode (pn_gig=1) and nibbles in 10/100Mbps mode.

Copyright © 2025 Texas Instruments Incorporated

- When a fetch allow bit is set, the corresponding priority is enabled to begin packet transmission on an allowed priority subject to rate limiting. There is no requirement that the packet end in the time interval. The actual packet transmission on the wire may carry over into the next fetch count - which is the reason for the wire clear time in a fetch zero allow.
- When a fetch allow bit is cleared, the corresponding priority is not enabled to transmit for the fetch count time. However, if a packet were enabled in a previous fetch allow there the packet could finish in the current time interval.
- A non-zero fetch allow value with a non-zero fetch count causes the fetch allow value to be applied for the fetch count number of wireside clocks (minimum of 16 fetch count).
- A zero fetch count causes the associated fetch allow to be held for the duration of the cycle (until the next cycle start).
- A zero fetch allow with a non-zero fetch count is intended to clear the wire for a scheduled (timed) express packet in the next fetch. A zero fetch allow indicates that no packet can be started for transmission for the associated fetch count. However, packets that were started in the previous interval could still be on the wire. The associated fetch count must be sufficient to guarantee that the wire is cleared given that a packet on an allowed priority in the previous fetch could have been started on the previous clock and that there is hardware latency in the clear time. The timed packet should be sent on a priority that is enabled in the next fetch but disabled in the current zero allow fetch.
- EST Ram Configuration – The simplest EST configuration is for a single express packet on a single priority in the EST time interval. Ram Address 0 will be read at the start of each interval, the timed packet goes out in Ram Address 1 interval, and Ram Address 2 priorities are held for the duration of the cycle in this simple configuration.
  - Ram Address 0 – 0xD0000 (10/100 with 1518 max pkt length in previous allow)
    - This is a zero allow at the beginning of each cycle which clears the wire for the timed express packet in the next fetch. The zero allow time (0xD00 in this case) allows the wire to be cleared for the express packet. Setting this value lower might push out the timed express packet into the next interval. For a 2020 max packet size in the previous allow, this value should be 0x10F400. The number of clocks required for the zero allow is determined by the below equation.
      - Clocks in zero allow = Maximum ***Express*** packet length in previous allow (times 2 for 10/100) + decimal 292. (If preemption is configured and enabled then this minimum time is 0x100 if only prempt priorites are in the previous allow – which is not a normal case).
  - Ram Address 1 – 0x01080
    - This is a decimal 16 clock allow for the timed express packet on priority 7. The 16 clock allow value permits only a single packet to start in the time interval.
  - Ram Address 2 – 0x0007F
    - This is a zero fetch count that allows priorities 6 downto 0 for the duration of the EST time interval. This is the previous allow for the zero allow in Address 0 above.

11.2.1.4.10.5 EST Packet Fill

- Packet fill can (should) be configured and enabled to occur in the fetch count time associated with a fetched zero allow that preceeds a timed express packet. The intention with fill is that a smaller packet on a non-timed priority might be able to be inserted on the wire during the wire clear time which would increase wire utilization. Fill must be configured to ensure that any fill packet does not conflict with the timed express packet allowed in the next fetch. Incorrect configuration might push out in time any express timed packet which indicates that the fill margin needs to be increased.
- Fill Configuration
  - The est_fill_margin value in Pn_EST_Control should be written with a 0x100 value.
  - The est_prempt_comp value in Pn_EST_Control should be written with a 0x12 value. This value times eight is the number of wireside clocks required to clear prempt packets off the wire at the end of a zero allow.
  - The est_fill_en bit in Pn_EST_Control should be set.

11.2.1.4.10.6 EST Time Stamp

- EST can be configured to generate CPTS timestamp events for selected express traffic.

Copyright © 2025 Texas Instruments Incorporated

- EST timestamp events use the CPTS host event type (event_type=7). EST timestamps will not override host sent timestamps for packets that were sent from the host with an enabled host timestamp.
- EST Events (host events EVENT_n_REG) contain the below information:
  - Time Stamp of the selected express packet.
  - The event port_number indicates the transmit port number.
  - The event event_type is decimal 7 (host event).
  - The event message_type indicates the packet transmit hardware switch priority.
  - The event sequence_id upper nibble indicates the packet receive port number.
  - The event sequence_id lower byte indicates the sequence number of the express packet in numerical order. The first event is event one, the second is event two and so on. The sequence id rolls over to zero after 0xff (8-bits).
  - The event domain is the value from the est_ts_domain[8:0] register.
- When est_ts_en is set, timestamp events will be generated on selected express traffic.
- When est_ts_first is also set, events will be generated only on the first express packet in each time interval. If est_ts_onepri is also set then the event will only be on the first est_ts_pri express packet in the time interval. If est_ts_onepri is clear then the event will be generated on the first express packet in the time interval on any priority.
- When est_ts_first is clear, events will be generated on every express packet. If est_ts_onepri is set then the event will be generated on every est_ts_pri express packet. If est_ts_onepri is clear then event will be generated on every express packet on any priority.

11.2.1.4.10.7 EST Packets Per Priority – (N = 2 only)

With a MAC configuration (**N** = 2), the number of packets allowed in a transmit FIFO priority can be selected by writing a non-zero value to **p0_rx_pkts_pri[7-0]**. The port 0 receive gap should then be enabled by setting the corresponding priority **rx_gap_en[7:0]**. The receive gap allows a packet to land in the transmit FIFO before another packet is allowed in which guarantees that only the selected number (max) of packets is allowed in on the specified priority. If the receive gap is not enabled, then there might be one or two more packets allowed in on the priority than the **p0_rx_pkt_pri[7:0]** value has selected.

11.2.1.4.11 DSCP

The ALE can map DSCP field to priority prior to port trunking hashing and policing/classification matching. When enabled the DSCP is mapped via 64 priority entries such that any DSCP value can be mapped to any of the eight priorities. When a packet is received without a VLAN priority this remapped priority can be used instead of the default Port VLAN priority field. See the Switch Port configuration for the registers describing DSCP mapping.

11.2.1.4.12 Packet Priority Handling

There are three priorities used inside the CPSW - the packet priority, the header packet priority, and the switch priority. The packet priority is the determined priority of the ingress packet. The header packet priorityis used as the outgoing VLAN priority if the packet is egressing from the switch with a VLAN tag. The switch prioritydetermines which of the eight FIFO priority queues the packet uses during egress.

The **vlan_ltype_sel** value below is selected by the **s_cn_switch** bit in the **CPSW_Control** register and is either the **vlan_ltype_inner** (0x8100 default) or **vlan_ltype_outer** (0x88a8 default) value.

11.2.1.4.12.1 Ethernet Port Ingress

Ethernet ingress packets have an ingress packet priority of 0 to 7 (with 7 being the highest priority). The packet priority is determined as follows:

1. If the first packet LTYPE = vlan_ltype_sel then the ingress packet priority is the packet priority (VLAN tagged and priority tagged packets).
2. Else if the first packet LTYPE = 0x0800 and byte 14 (following the LTYPE) is equal to 0x4X, and dscp_ipv4_en is set in Pn_Control, then the ingress packet priority is the 6-bit TOS field in byte 15 (upper 6-bits) mapped through the port's DSCP priority mapping registers (IPV4 packet).

Copyright © 2025 Texas Instruments Incorporated

3. Else if the first packet LTYPE = 0x86dd and the most significant nibble of byte 14 (following the LTYPE) is equal to 0x6, and dscp_ipv6_en is set in Pn_Control, then the ingress packet priority is the 6-bit priority (in the 6-bits following the upper nibble 0x6) mapped through the port's DSCP priority mapping registers (IPV6 packet).
4. Else the ingress packet priority is the source (ingress) port priority taken from the port's Pn_Port_VLAN register.

The packet priority is mapped through the ingress port's associated "packet priority to header packet priority mapping register" (**pn_rx_pri_map**) to obtain the header packet priority (**hdr_pkt_pri**). The header packet priority is then used as the actual transmit packet priority if the VLAN information is to be sent on egress. The header packet priority is mapped at each destination FIFO through the **pn_tx_pri_map** register (header priority to switch priority mapping register) to obtain the hardware switch priority (hardware queue 0 through 7).

11.2.1.4.12.2 CPPI Port FHost (Ingress)

FHost packets have a packet priority (0 to 7 with 7 being the highest priority). The FHost packet priority is determined as follows:

1. If the first packet LTYPE = vlan_ltype_sel then the FHost packet priority is the packet priority (VLAN tagged and priority tagged packets).
2. Else if the first packet LTYPE = 0x0800 and byte 14 (following the LTYPE) is equal to 0x4X, and p0_dscp_ipv4_en is set in P0_Control, then the FHost packet priority is the 6-bit TOS field in byte 15 (upper 6-bits) mapped through the port's DSCP priority mapping registers (IPV4 packet).
3. Else if the first packet LTYPE = 0x86dd and the most significant nibble of byte 14 (following the LTYPE) is equal to 0x6, and dscp_ipv6_en is set in P0_Control, then the FHost packet priority is the 6-bit priority (in the 6-bits following the upper nibble 0x6) mapped through the port's DSCP priority mapping registers (IPV6 packet).
4. Else the FHost packet priority is the source port priority taken from P0_Port_VLAN.

The ingress packet priority is mapped through the port's associated "packet priority to header packet priority mapping register" (**p0_rx_pri_map**) to obtain the header packet priority. The header packet priority is then used as the actual transmit packet priority if the VLAN information is to be sent on egress.

For CPPI FHost packets, the destination port hardware switch priority is the below selected value remapped through **p0_rx_pri_map**:

1. If the FHost packet is priority tagged or vlan tagged:
   - If rx_remap_vlan is clear then the the destination hardware switch priority is the CPPI FHost channel number.
   - If rx_remap_vlan is set then the the destination hardware switch priority is the packet priority value. Port transmit remapping (Pn_Tx_Pri_Map should remain the default value) is not compatible with this bit being set, but remapping can be configured on port 0 FHost. If N=2 (two port MAC) remapping should be done only on ingress for Ethernet and CPPI.
2. Else if the ingress packet has the first packet LTYPE = 0x0800 and byte 14 (following the LTYPE) is equal to 0x4X, and **dscp_ipv4_en** is set in **P0_Control**:
   - If rx_remap_dscp_v4 is clear then the destination hardware switch priority is the CPPI ingress priority.
   - If rx_remap_dscp_v4 is set then the destination hardware switch priority is the 6-bit TOS field in byte 15 (upper 6-bits) mapped through the port's DSCP priority mapping registers (IPV4 packet). Port 1 transmit remapping (Pn_Tx_Pri_Map should remain the default value) is not compatible with this bit being set, but remapping can be configured on port 0 ingress. If N=2 (two port MAC) remapping should be done only on ingress for Ethernet and CPPI.
3. Else if the ingress packet has the first packet LTYPE = 0x86dd and the most significant nibble of byte 14 (following the LTYPE) is equal to 0x6, and **dscp_ipv6_en** is set in **CPPI_P0_Control**:
   - If rx_remap_dscp_v6 is clear then the destination hardware switch priority is the CPPI ingress priority.
   - If rx_remap_dscp_v6 is set then the destination hardware switch priority is the 6-bit priority (in the 6-bits following the upper nibble 0x6) mapped through the port's DSCP priority mapping registers (IPV6 packet). Port 1 transmit remapping (Pn_Tx_Pri_Map should remain the default value) is not compatible with this

Copyright © 2025 Texas Instruments Incorporated

bit being set, but remapping can be configured on port 0 ingress. If N=2 (two port MAC) remapping should be done only on ingress for Ethernet and CPPI.

4. Else the ingress packet is non-tagged and the destination hardware switch priority is the CPPI ingress channel number.

11.2.1.4.12.3 CPPI Port THost (Egress)

If the **thost_ch_override** bit in **CPDMA_Control** is clear then the CPDMA packet THost channel number is the port 0 hardware switch priority. If **thost_ch_overide** is set, then for packets with a classification match the THost channel number is the lower three bits of the 6-bit address lookup engine classification match value (**threadval[2:0]** in ALE register **THREADMAPVAL**). The **flow** value in the VLAN encapsulation word is all 6 bits of the **threadval** for classifier matches regardless of the setting of **thost_ch_override** if the encapsulation word is transferred.

11.2.1.4.13 Packet CRC Handling

Every cpsw ingress packet on all ports is checked for CRC correctness. Each packet is then given an internally generated Castignoli CRC for transport through the cpsw to egress port(s). The internally generated Castignoli CRC protects the packet from end to end through the cpsw. Ingress Packets with CRC errors are handled as indicated below.

11.2.1.4.13.1 Ethernet Port Ingress

Ethernet ports check each ingress packet CRC for correctness in all modes/speeds. The port can check for either Ethernet CRC for correctness as determined by the **crc_type** bit in the **Mac_Control** register. Ethernet packets received with a CRC error are dropped at the receive port unless the receive port **rx_cef_en** bit is set. Error packets are sent only to the host port. For packets with Ethernet ingress errors sent to the host, the error is indicated in the host egress buffer descriptor and the original packet CRC bytes are kept for CPDMA THost.

11.2.1.4.13.2 Ethernet Port Egress

Ethernet ports transmit egress packets with the CRC type selected by the **crc_type** bit in the **Pn_Mac_Control** register regardless of the packet's ingress CRC type. On Ethernet egress, after passing through the switch, the internally generated Castignoli CRC is checked for correctness and if correct the packet is output with the generated selected output CRC type. If the internally generated CRC is incorrect, due either to a bit flip in a memory (or logic) or an error CRC passed in on host ingress, then the generated egress CRC type is used with at least a single byte of the internally generated Castignoli CRC inverted to indicate the error. If the packet length including CRC is divisible by 4 then all 4 CRC bytes will be inverted on error. If there are three bytes remainder after dividing the packet length by 4 then three bytes will be inverted (and so on down to one byte remainder).

11.2.1.4.13.3 CPPI Port FHost

CPPI host port FHost packets can be passed in with or without a CRC. The FHost packet CRC type is indicated in the buffer descriptor word **crc_type** bit and can be Ethernet. The **p0_rx_pass_crc_err** bit in the **CPSW_Control** register determines if FHost packets with CRC errors are passed or dropped. Passed packets with CRC errors will be transmitted on Ethernet egress with a CRC error.

11.2.1.4.13.4 CPPI Port Egress (THost)

The **p0_tx_crc_remove** bit in the **CPSW_Control** register determines if all CPPI THost packets have a CRC included or not. THost packets not filtered on Ethernet ingress due to **pn_rx_cef_en** have the packet error CRC included (not replaced by the egress CRC type) if the CRC is not removed on egress. The error is indicated in the buffer descriptor. CPPI THost packets that detected a CRC error on the internally generated Castignoli CRC, due to a bit flip in logic or memory, will indicate the error with the **drop** bit set in the buffer descriptor.

11.2.1.4.14 Ethernet FIFO

Each transmit packet FIFO contains eight logical transmit queues (priority 0 through 7 with 7 the highest priority) regardless of the memory configuration. The receive logical FIFO is combined with the transmit logical FIFO into the same RAM instance. The receive FIFO is used for single packet reception and error detection and flow control runout. Packets are queued on transmit. Ethernet FIFO size is 20 KBytes.

Copyright © 2025 Texas Instruments Incorporated

11.2.1.4.15 Ethernet Receive Flow Control

When enabled and triggered, receive flow control is initiated to limit the Mac from further frame reception. Half-duplex mode receive flow control is collision based while full duplex mode issues 802.3X or Priority Based Flow Control (PFC) pause frames. In all cases, receive flow control prevents frame reception by issuing the flow control appropriate for the current mode of operation. Receive flow control is enabled by the **rx_flow_en** bit in the **Pn_Mac_Control** register, and **rx_flow_pri[7:0]** in **Pn_Pri_Ctl**. For 10/100 modes of operation, collision or IEEE 802.3X flow control is determined via the **fullduplex** bit in the **Pn_Mac_Control** register. The **fullduplex** bit must be set for Priority Based Flow Control.

11.2.1.4.15.1 MII (10/100) Collision Based Receive Buffer Flow Control

Collision-based receive buffer flow control provides a means of preventing frame reception when the port is operating in half-duplex mode (**fullduplex**is cleared in **Pn_Mac_Control)**. When receive flow control is enabled and triggered, the port will generate collisions for received frames. The jam sequence transmitted will be the twelve byte sequence C3.C3.C3.C3.C3.C3.C3.C3.C3.C3.C3.C3 (hex). The jam sequence will begin no later than approximately as the source address starts to be received. Note that these forced collisions will not be limited to a maximum of 16 consecutive collisions, and are independent of the normal back-off algorithm. Receive flow control does not depend on the value of the incoming frame destination address. A collision will be generated for any incoming packet, regardless of the destination address.

11.2.1.4.15.2 IEEE 802.3X (10/100/1G/10G) Receive Flow Control

IEEE 802.3x based receive flow control provides a means of preventing frame reception when the port is operating in full-duplex mode (**fullduplex**is set in **Pn_Mac_Control)**. When receive flow control is enabled and triggered, the port will transmit a pause frame to request that the sending station stop transmitting for the period indicated within the transmitted pause frame.

The Mac will transmit a pause frame to the reserved multicast address at the first available opportunity (immediately if currently idle, or following the completion of the frame currently being transmitted). The pause frame will contain the maximum possible value for the pause time (0xFFFF). The MAC will count the receive pause frame time (decrements 0xFF00 down to zero) and retransmit an outgoing pause frame if the count reaches zero. When the flow control request is removed, the MAC will transmit a pause frame with a zero pause time to cancel the pause request.

Note that transmitted pause frames are only a request to the other end station to stop transmitting. Frames that are received during the pause interval will be received normally (provided the Rx FIFO is not full at which time the receive FIFO will overrun and **Rx_Top_Of_FIFO_Drop** will increment).

Pause frames will be transmitted if enabled and triggered regardless of whether or not the port is observing the pause time period from an incoming pause frame.

The Mac will transmit pause frames as described below:

- The 48-bit reserved multicast destination address 01.80.C2.00.00.01.
- The 48-bit source address – Pn_SA(47:0) (PN_SA_L, PN_SA_H registers).
- The 16-bit length/type field containing the value 88.08
- The 16-bit pause opcode equal to 00.01
- The 16-bit pause time value FF.FF. A pause-quantum is 512 bit-times. Pause frames sent to cancel a pause request will have a pause time value of 00.00.
- Zero padding to 64-byte packet length (The MAC will transmit only 64 byte pause frames).
- The 32-bit frame-check sequence (CRC word).

All quantities above are hexadecimal and are transmitted most-significant byte first. The least-significant bit is transferred first in each byte.

If **rx_flow_en** is cleared to zero while the pause time is nonzero, then the pause time will be cleared to zero and a zero count pause frame will be sent.

Copyright © 2025 Texas Instruments Incorporated

11.2.1.4.15.2.1 Flow Control Trigger

Receive flow control is triggered (when enabled), when the number of words in the receive FIFO is greater than or equal to **rx_flow_thresh**. The flow control packet runout is then contained in the remainder of the receive FIFO.

11.2.1.4.15.3 802.1Qbb (10/100/1G/10G) Receive Priority Based Flow Control (PFC)

IEEE 802.1Qbb based receive flow control provides a means of preventing frame reception when the port is operating in full-duplex mode (**pn_fullduplex**must be set in **Enet_Pn_Mac_Control)** and when the number of ports is greater than or equal to 3 (N >=3). When receive PFC flow control is enabled and triggered for a priority, the port will transmit a PFC pause frame to request that the sending station stop transmitting on that prioritiy (and perhaps others) for the period indicated within the transmitted pause frame (FF.FF pause time). When the triggering condition is removed, or when PFC flow control is disabled, the port will transmit a pause frame to cancel the pause request (00.00 pause time). Priority based pause frames can have one to eight priorities enabled as determined by the priority enable vector in the pause frame. Pause frames can give some priorities pause on and others pause off in the same frame. An enabled priority will have either a pause on value (FF.FF) or a pause off value (00.00). Priorities with a zero enable bit in the pause frame priority enable vector are unchanged by the pause frame on the sending station side. The **pn_rx_flow_pri[7:0]** value in **Enet_Pn_Pri_Ctl** indicates which port receive priorities are enabled for PFC. The priority enable vector in the pause frame only refers to the priorities that have a valid pause on or pause off sent in the sent pause frame.

The Mac will transmit a pause frame to the reserved multicast address at the first available opportunity (immediately if currently idle, or following the completion of the frame currently being transmitted). The pause frame will contain the maximum possible value for the pause time (FF.FF) on each priority to be paused along with a set priority enable vector bit. The MAC will count the receive pause frame time (decrements FF.00 down to zero) and retransmit an outgoing pause frame if the count reaches zero. When the flow control trigger is removed for a specific priority, the MAC will transmit a pause frame with a set priority enable vector bit and a zero pause time on that priority to cancel the pause request.

Note that transmitted pause frames are only a request to the other end station to stop transmitting. Frames that are received during the pause interval will be received normally (provided the Rx FIFO is not full at which time the receive FIFO will overrun and **Rx_Top_Of_FIFO_Drop** will increment).

Pause frames will be transmitted if enabled and triggered regardless of whether or not the port is observing the pause time period from an incoming pause frame on the priority to be paused or not.

The Mac will transmit pause frames as described below (all numbers are hexadecimal):

- The 48-bit reserved multicast destination address 01.80.C2.00.00.01
- The 48-bit source address – **Enet_Pn_SA(47:0)**.
- The 16-bit length/type field containing the value 88.08
- The 16-bit pause opcode equal to 01.01
- The 16-bit priority enable vector. The lower 8-bits are used for priorities 7 down to 0
- A 16-bit pause time value for each priority. The pause on value is FF.FF and the pause off value is 00.00. A pause-quantum is 512 bit-times
- Zero padding to 64-byte data length (The MAC will transmit only 64 byte pause frames)
- The 32-bit frame-check sequence (CRC word)

All quantities above are hexadecimal and are transmitted most-significant byte first. The least-significant bit is transferred first in each byte.

If pn_rx_flow_en is cleared to zero while the pause time is nonzero, then the pause time will be cleared to zero and a zero count pause frame will be sent. For any priority that has flow control enabled then then associated priority in the Enet_Pn_Tx_Blks_Pri register should be written with zero.

11.2.1.4.15.3.1 PFC Trigger Rules

There are five rules that can each set and clear a PFC trigger condition for each enabled priority. The five rules are:

Copyright © 2025 Texas Instruments Incorporated

- the destination based rule
- the sum of outflows rule
- the sum of blocks per port rule
- the sum of blocks total rule
- the top of receive FIFO rule

Ethernet ports issue transmit PFC pause frames when any priority is triggered for any rule. Port 0 issues flow control on the associated receive priority when any priority is triggered for any rule. There are no pause frames sent on port 0 transmit (no port 0 outflow). Receive priority remapping is taken into account for all rules on all ports. Transmit priority remapping is taken into account for the sum of outflows rule, the sum of blocks per port rule, and the destination based rule. Transmit priority remapping is not taken into account for the sum of blocks total rule or the top of receive FIFO rule. The intent of PFC is to shutdown lower priorities as traffic congestion increases so that the higher priorities can continue to operate. Systems with only 1518 byte packets may only need to configure the destination based rule. Systems with jumbo packets on lower priorities may need to configure the other more aggressive rules on those priorities in order to preclude increasing high priority packet latency.

Destination Based Rule

The destination based rule is the primary rule for PFC and should be configured when PFC is enabled. The rule is evaluated for PFC trigger when the destination ports are determined on address lookup *at packet reception* (bottom of receive FIFO). The conditions of all packet destination port transmit FIFO's at packet reception determine whether or not one or more receive port priorities will be triggered. Each packet destination port is evaluated for each priority and the results are combined to produce the priority flow control trigger(s) on the receive port. A priority trigger is cleared *at any time* the clear condition is satisfied for that priority on all destination port FIFO's (all transmit FIFO's that set the trigger). The intent of the rule is to progressively trigger receive PFC with decreasing priority as the FIFO allocated blocks (**pn_tx_blk_cnt**) increases, and have the effect of priority outflow increase with decreasing priority. The add amount for outflow is zero if the outflow is not set and **addvalX** if the outflow is set for a particular priority.

A PFC priority is triggered by conditions in *any* destination transmit FIFO by the below equation *at packet reception*:

priX_trig_set=((addvalX[4:0]&{5{d_trig_setX}})+ pn_tx_blk_cnt[4:0]) >= d_thresh_setX[4:0]

A PFC priority is cleared by conditions in *all* destination transmit FIFO's by the below equation *at any time* after the set has occurred:

priX_trig_clr=((addvalX[4:0]& {5{d_trig_setX}}) + pn_tx_blk_cnt[4:0]) <= d_thresh_clrX[4:0]

Where:

- X is the priority
- addvalX is from Enet_Pn_D_Oflow_Addval(l/h) and has a maximum value of 11 decimal
- d_trig_setX is set when transmit flow control (outflow) is triggered on the destination tx FIFO priority (by receiving a pause frame with the associated priority paused)
- pn_tx_blk_cnt is the total number of blocks allocated on all priorities in the destination transmit FIFO (0 to 20)
- d_thresh_setX is from Enet_PN_D_Thresh_Set(l/h)
- d_thresh_clrX is from Enet_PN_D_Thresh_Clr(l/h)
- d_thresh_setX must be greater than d_thresh_clrX

Sum of Outflows Rule

The Sum of Outflows rule is a global control that sets and clears PFC triggers on a receive port due to conditions in *all other Ethernet port* transmit FIFOs *regardless of receive traffic*. An outflow is set for a transmit FIFO priority when a PFC pause frame is received on the port with a non-zero pause quanta for that priority indicating that the port should not transmit on that priority. An outflow is clear for a priority when the transmit pause condition is removed either due to receiving a pause frame with a zero pause quanta or by the pause timer expiring for

Copyright © 2025 Texas Instruments Incorporated

the priority. Port 0 does not have transmit flow control. The sum of outflows rule is intended to be used in some systems to pass along outflow on lower priorities with larger packet sizes. Triggering PFC on priorities due to this rule also prevents packet transmission from Ethernet ports to the host for the duration of the pause time on the triggered priorities. When configured to trigger due to this rule, pause frames will be sent on Ethernet ports regardless of receive traffic.

A PFC priority is triggered by conditions in *all other Ethernet*transmit FIFOs by the below equation *at any time*:

priX_trig_set = sum of all other Ethernet port priX_outflows >= g_oflow_thresh_setX[4:0]

A PFC priority is cleared by conditions in *all other Ethernet* transmit FIFO's by the below equation *at any time*:

priX_trig_clr = sum of all other Ethernet port priX_outflows <= g_oflow_thresh_clrX[4:0]

Where:

- X is the priority
- g_oflow_thresh_setX is from CPSW_G_OFlow_Thresh_Set
- g_oflow_thresh_clrX is from CPSW_G_OFlow_Thresh_Clr
- g_oflow_thresh_setX must be greater than g_oflow_thresh_clrX

Sum of Blocks Per Port Rule

The Sum of Blocks Per Port rule is an aggressive global control that sets and clears PFC triggers on receive ports due to conditions in *any other port* transmit FIFO *regardless of receive traffic*. When any transmit FIFO has a trigger condition set, all other receive ports will trigger PFC for that priority. This rule is intended to be configured in systems with high traffic rate jumbo packets on lower priorities.

A PFC priority is triggered by conditions in *any other* transmit FIFO by the below equation *at any time*:

priX_trig_set when the sum of all Tx FIFO blocks allocated on the port >= thresh_setX[4:0]

A PFC priority is cleared when conditions in *all other Ethernet* transmit FIFO's satisfy the below equation *at any time*:

priX_trig_clr when the sum of all tx FIFO blocks allocated on the port <= thresh_clrX[4:0]

Where:

- X is the priority
- thresh_setX is from Enet_Pn_G_Buf_Thresh_Set (or CPPI_P0_G_Buf_Thresh_Set)
- thresh_clrX is from Enet_PN_G_Buf_Thresh_Clr (or CPPI_P0_G_Buf_Thresh_Clr)
- thresh_setX must be greater than thresh_clrX for each priority

Sum of Blocks Total Rule

The Sum of Blocks Total rule is an extremely aggressive global control that sets and clears PFC triggers on receive ports due to conditions in *all* transmit FIFOs *regardless of receive traffic*. When any priority has a trigger condition set, all receive ports will trigger PFC for that priority. The intent of this rule is to shutdown lower priorities with jumbo packets as the total switch congestion increases

A PFC priority is triggered by conditions in *all*transmit FIFO by the below equation *at any time*:

priX_trig_set = sum of all tx FIFO blocks allocated in all ports >= thresh_setX[4:0]

A PFC priority is cleared when conditions in *all*transmit FIFO's satisfy the below equation *at any time*:

priX_trig_clr = sum of all tx FIFO blocks allocated in all ports <= thresh_clrX[4:0]

Where:

- X is the priority
- thresh_setX is from CPSW_G_Buf_Thresh_Set

Copyright © 2025 Texas Instruments Incorporated

- thresh_clrX is from CPSW_G_Buf_Thresh_Clr
- thresh_setX must be greater than thresh_clrX for each priority

Top of Receive FIFO Rule

The Top of Receive FIFO Rule sets PFC triggers on the associated receive port for all priorities. This rule requires no configuration and is enabled when PFC flow control is enabled. The Top of Receive FIFO rule triggers when a received packet cannot be transferred to an intended destination port due to insufficient space in that destination port transmit FIFO. The receive FIFO exists to accept flow control runout (especially for 802.3 flow control). The trigger condition for this rule is cleared when the receive FIFO is emptied after runout. Preferable PFC configurations preclude this rule from triggering. If a lower priority packet triggers this rule then higher priority packets could be in the runout after the lower priority packet(s), which would increase the switch latency of the higher priority packets. This rule ensures that there is no packet loss on any priority in any configuration; However, PFC configuration should ensure that this rule is triggered only by high priority packets or preferably not at all. The **pn_torf** bit in the **Enet_Pn_Mac_Status** register indicates that this rule has triggered. The **pn_torf_pri** field indicates the lowest priority that has triggered this rule since the last clearing of the status register fields. More aggressive shutdown of lower priorities in the other rules is preferable to having this rule trigger

11.2.1.4.15.4 Ethernet Transmit Flow Control

11.2.1.4.15.4.1 IEEE 802.3X (10/100/1G/10G) Based Transmit Flow Control

Incoming pause frames are acted upon, when enabled, to prevent the Mac from transmitting any further frames. Incoming pause frames are only acted upon when the **fullduplex** and **tx_flow_en** bits in the **Pn_Mac_Control** register are set. Pause frames are not acted upon in half-duplex mode. Pause frame action will be taken if enabled, but normally the frame will be filtered and not transferred to memory. MAC control frames will be transferred to memory if the **rx_cmf_en** (Copy MAC Frames) bit in the **Pn_Mac_Control** register is set. The **tx_flow_en** and **fullduplex** bits effect whether or not MAC control frames are acted upon, but they have no effect upon whether or not MAC control frames are transferred to memory or filtered.

Pause frames are a subset of MAC Control Frames with an opcode field=0x0001. Incoming pause frames will only be acted upon by the port if:

- tx_flow_en is set in Pn_Mac_Control, and
- the frame's length is 64 to rx_maxlen bytes inclusive, and
- the frame contains no crc error or align/code errors.

The pause time value from valid frames will be extracted from the two bytes following the opcode. The pause time will be loaded into the port's transmit pause timer and the transmit pause time period will begin.

If a valid pause frame is received during the transmit pause time period of a previous transmit pause frame then:

- if the destination address is not equal to the reserved multicast address or any enabled or disabled unicast address, then the transmit pause timer will immediately expire, or
- if the new pause time value is zero then the transmit pause timer will immediately expire, else
- the port transmit pause timer will immediately be set to the new pause frame pause time value. (Any remaining pause time from the previous pause frame will be discarded).

If **tx_flow_en** in **Pn_Mac_Control** is cleared, then the pause-timer will immediately expire.

The port will not start the transmission of a new data frame any sooner than 512-bit times after a pause frame with a non-zero pause time has finished being received (**MRXDV** going inactive). No transmission will begin until the pause timer has expired (the port may transmit pause frames in order to initiate outgoing flow control). Any frame already in transmission when a pause frame is received will be completed and unaffected.

Incoming pause frames consist of the below:

- A 48-bit destination address equal to:

Copyright © 2025 Texas Instruments Incorporated

  - The reserved multicast destination address 01.80.C2.00.00.01, or
  - The Enet_Pn_SA[47:0] input mac source address.
- The 48-bit source address of the transmitting device.
- The 16-bit length/type field containing the value 88.08
- The 16-bit pause opcode equal to 00.01
- The 16-bit pause_time. A pause-quantum is 512 bit-times.
- Padding to 64-byte packet length.
- The 32-bit frame-check sequence (CRC word).

All quantities above are hexadecimal and are transmitted most-significant byte first. The least-significant bit is transferred first in each byte.

The padding is required to make up the frame to a minimum of 64 bytes. The standard allows pause frames longer than 64 bytes to be discarded or interpreted as valid pause frames. The MAC will recognize any pause frame between 64 bytes and **rx_maxlen** bytes in length.

11.2.1.4.16 Energy Efficient Ethernet Support (802.3az)

Energy Efficient Ethernet (EEE) allows the external clock controller to turn off (in a glitch-less manner) the module input clock (**CLK**) during inactive periods as determined by network and host traffic. The module can then be awakened by host queued transmit packet(s) or by a port's external Ethernet PHY. The module EEE clock stop interface is used by the external controller to control module EEE operations. EEE is supported in MII/GMII/RGMII but not RMII, The chosen PHY must also support EEE. EEE operations are configured as shown below:

1. The 12-bit EEE clock pre-scale value is written to the switch EEE_Prescale register. The pre-scaler is used to clock all EEE related counters.
2. The port Idle to LPI count values (Pn_Idle2LPI) are written with the desired values.
3. The port LPI to Wake count values (Pn_LPI2Wake) are written with the desired values.
4. The eee_en bit is set in the switch CPSW_Control register.

Energy Efficient Ethernet operation can begin after configuration. The host allows the module to enter a low power state by asserting the **CLKSTOP_REQ** signal. There are no requirements on host queues or traffic in order for the host to assert or de-assert **CLKSTOP_REQ**.

Each Ethernet port has a transmit and a receive LPI (low power indicate) state. The receive LPI state is entered when the port's corresponding PHY indicates the LPI state via the MII/RGMII interface. The PHY indicates LPI by asserting **GMII_MRXER_SEL** with a **GMII_MRXD[7:0]** value of 0x01 while **GMII_MRXDV** is deasserted (inter-packet gap). The Ethernet transmit port indicates LPI after the **PX_Idle2LPI** value has been counted (the transmit port has gone idle for the configured amount of time). If another packet is received for transmit during the count then the count is restarted. When the transmit port has been idle for the Idle to LPI time, the transmit port enters the LPI state and indicates LPI to the associated PHY. The LPI is indicated to the external PHY by an asserted **GMII_MTXER** with a **GMII_MTXD[7:0]** value of 0x01. while **GMII_MTXEN** is deasserted (inter-packet gap). The CPPI LPI state includes transmit and receive. The CPPI LPI state is entered when the CPPI transmit and receive interfaces have both been idle for the Idle to LPI time (**P0_Idle2LPI**). The Idle to LPI time value for all ports must be large relative to the switch latency to ensure that the count is not able to complete between successive packets.

When all transmit and receive ports are in the LPI state (CPSW LPI state), the **CLKSTOP_ACK** signal is asserted, and the external clock controller is allowed to stop the input module clock (**CLK**). The clock must be stopped (and re-started) in a glitch-less manner. When **CLKSTOP_ACK** is asserted, the clockmay be turned on and off as desired by the host. The host is allowed to restart the clock, perform slave read/write operations to the module memory address space, and then turn off the clock again while **CLKSTOP_ACK** is asserted. The clock must be restarted for two clock periods before the assertion of **SLV_VBUSP_REQ** and must remain asserted for five clock periods after the de-assertion of **SLV_VBUSP_REQ**.

The host can remove and disable from re-entering the CPSW LPI state by restarting the module clock (in a glitch-less manner) and then de-asserting **CLKSTOP_REQ**. There must be at least one rising edge of the

Copyright © 2025 Texas Instruments Incorporated

clockbefore **CLKSTOP_REQ** is de-asserted. The module **CLKSTOP_ACK** output signal will be deasserted on the clock after the de-assertion of **CLKSTOP_REQ**. The host may queue CPPI receive packets at any time without regard to the module LPI state. The Host must deassert **CLKSTOP_REQ** on wakeup for a minimum of two clock periods. If **CLKSTOP_REQ** is deasserted for less than 5 clock periods for a wakeup event from the host to a particular Ethernet port (or visa versa), then the wakeup event will not cause the other Ethernet ports to awaken.

The external Ethernet PHY's can also wakeup the external clock controller by removing the Ethernet receive LPI indication. If the module is in the CPSW Idle state with **CLKSTOP_ACK** asserted and the receive LPI indication is removed, the **CLKSTOP_WAKEUP** signal will be asynchronously asserted. On wakeup, the external clock controller must restart the clock and de-assert the **CLKSTOP_REQ** signal. The **CLKSTOP_WAKEUP** signal will be synchronously deasserted with **CLKSTOP_ACK**. There must be at least one positive edge of the clock before the **CLKSTOP_REQ** signal is deasserted. Upon the de-assertion of **CLKSTOP_REQ**, the Ethernet ports will count the **Pn_LPI2Wake** time for each port at which time the port is available for transmit.

11.2.1.4.17 Switch Latency

When the CPSW is configured as a store and forward switch, the switch latency is defined as the amount of time between the end of packet reception of the received packet to the start of the output packet transmit. The store and forward latency is shown in the below table:

Mode	Latency
Gig (1000)	880ns
100	1.3us
10	6.5us

11.2.1.4.18 Emulation Control

The emulation control input (**EMUSUSP**), emulation control register, and the submodule emulation control registers allow CPSW operation to be completely or partially suspended. The CPDMA Host port and each Ethernet port has associated emulation control registers. The submodule emulation control registers must be accessed to facilitate CPSW emulation control. The CPSW module enters the emulation suspend state if the switch level emulation control register and all submodules are configured for emulation suspend and the emulation suspend input is asserted. A partial emulation suspend state is entered if one or more submodules is configured for emulation suspend and the emulation suspend input is asserted. Emulation suspend occurs at packet boundaries. The emulation control feature is implemented for compatibility with other peripherals. The following table shows the operation of the emulation control input and register bits:

EMUSUSP	soft	free	Description
0	X	X	Normal Operation
1	0	0	Normal Operation
1	1	0	Emulation Suspend
1	X	1	Normal Operation

Note

Enable Suspend control (EMUSUSP) by MSS_CTRL: MSS_DBG_ACK_CTL0[26:24]

11.2.1.4.19 Software IDLE

The software idle register bits enable switch operation to be completely or partially suspended by software control. Each Ethernet port may be individually commanded to enter the idle state. The idle state is entered at packet boundaries, and no further packet operations will occur on an idled port until the idle command is removed. The CPSW software idle inhibits packets from starting to be unloaded from each port switch FIFO, but packets already in process are unaffected.

Copyright © 2025 Texas Instruments Incorporated

11.2.1.4.20 Common Platform Time Sync (CPTS)

The Common Platform Time Sync (CPTS) module is used to facilitate host control of time sync operations. It enables compliance with the IEEE 1588 standard for a precision clock synchronization protocol.

Main features of CPTS module are:

- Supports the selection of up to 32 external clock sources.
- Software control of time sync events via interrupt or polling.
- Supports 8 hardware timestamp push inputs.
- Supports timestamp counter compare output (TS_COMP).
- Supports timestamp counter bit output (TS_SYNC).
- Supports a configurable number of timestamp Generator bit outputs (TS_GENFn).
- Supports Ethernet Enhanced Scheduled Traffic Operations (TS_ESTFn).
- 64-bit timestamp mode with PPM and nudge adjustment.

11.2.1.4.20.1 CPTS Integration

This section describes CPTS module integration in the device, including information about clocks, resets, and hardware requests.

Figure 11-147 shows CPTS integration in the device.

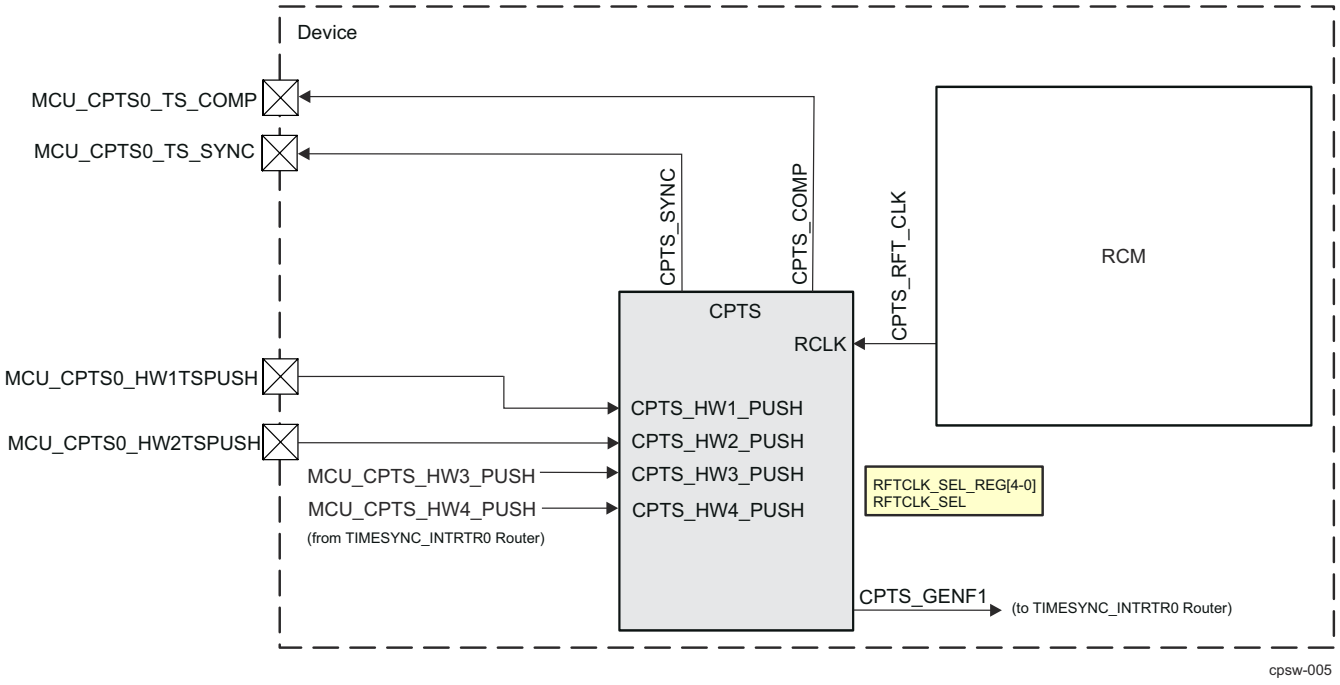

Figure 11-147. CPTS Integration

CPTS IEEE 1588 clock (RCLK) is selected through the CPSW_CPTS_RFTCLK_SEL_REG register.

Note

For more information about CPTS clocks and resets, see Table 11-270 in Section 11.2.1.3 *CPSW Integration*.

11.2.1.4.20.2 CPTS Architecture

Figure 11-148 shows the architecture of the CPTS module inside the CPSW Ethernet Subsystem. Time stamp values for every packet transmitted or received on either port of the CPSW are recorded. At the same time, each

Copyright © 2025 Texas Instruments Incorporated

packet is decoded to determine if it is a valid time sync event. If so, an event is loaded into the Event FIFO for processing containing the recorded time stamp value when the packet was transmitted or received.

In addition, both hardware (HWx_TS_PUSH) and software (TS_PUSH) can be used to read the current time stamp value though the Event FIFO. The reference clock used for the time stamp (CPTS_RFT_CLK) can be derived from several sources.

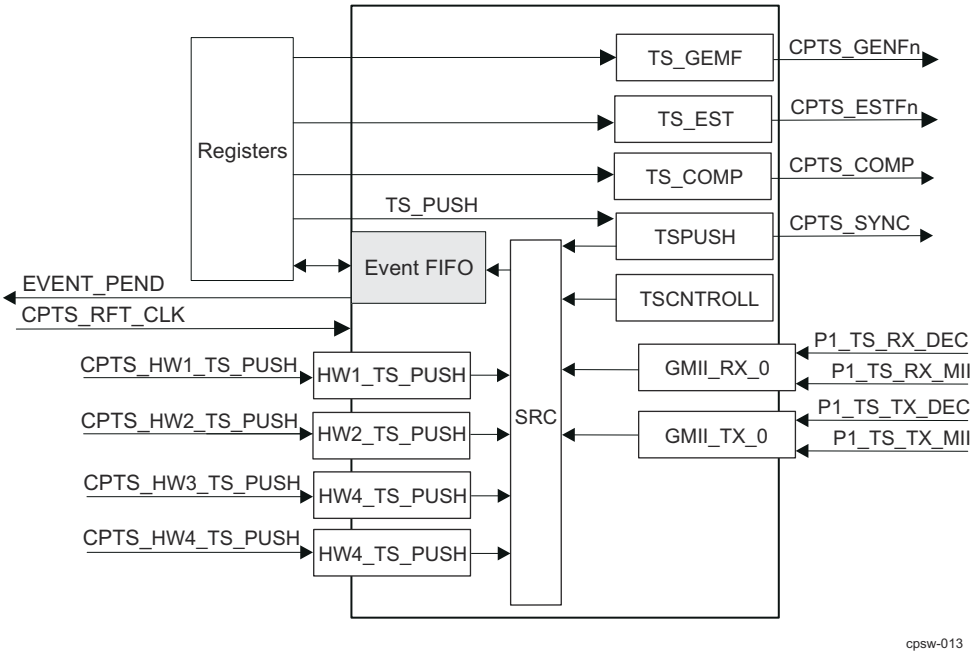

Figure 11-148. CPTS Block Diagram

Note

See Section 11.2.1.4.20.1, *CPTS Integration* for CPTS integration in the device.

11.2.1.4.20.3 CPTS Initialization

The CPTS module should be configured as follows:

1. Reset the CPTS module.
2. Write the **rftclk_sel[4:0]** value in the **RFTCLK_Sel** register with the desired reference clock multiplexor value. This value is allowed to be written only when the **cpts_en** bit in CPTS control register is cleared to zero.
3. Write a one to the **cpts_en** bit in the **TS_Control** register. The **RCLK** domain is in reset while this bit is low.
4. Enable the interrupt by writing a one to the **ts_pend** bit in the **Int_Enable** register (if using interrupts and not polling)..

11.2.1.4.20.4 32-bit Time Stamp Value

The **time_stamp** value is a 32-bit value that is cleared to zero when **cpts_en** is cleared to zero and increments on each **RCLK** rising edge when **cpts_en** is set to one. The time stamp value can be written via the time stamp load function (**TS_Load_En** and **TS_Load_Low_val** registers). Host software maintains the required number of upper bits of the time stamp value. The upper time stamp value is incremented by the host when the rollover event is detected. The **add_val[2:0]** of **TS_ADD_VAL** value must be zero in 32-bit mode. Nudge and PPM adjustments are not supported in 32-bit mode.

Copyright © 2025 Texas Instruments Incorporated

11.2.1.4.20.5 64-bit Time Stamp Value

The **time_stamp** value is a 64-bit value that is cleared to zero when **cpts_en** is cleared to zero and increments by the increment value (1 to 8) on each **RCLK** rising edge when **cpts_en** is set to one. The increment value is from 1 to 8 (1 + **ts_add_val[2:0]**). The default increment value is one. The time stamp value can be written via the time stamp load function (**TS_Load_En**, **TS_Load_Low_val**, and **TS_Load_High_val** registers). The **add_val** feature (TS_ADD_VAL_Reg) is included to allow 1ns timestamp operations with an **RCLK** rate less than 1Ghz.The below table shows the **RCLK** and **add_val** values for 1ns operations. The highest **RCLK** frequency possible should be used as allowed by the technology. Table 11-288 shows the RFTCLK_SEL and TS_ADD_VAL_REG values for 1ns operations.

Table 11-288. ADD_VAL feature

RFTCLK_SEL (MHz)	TS_ADD_VAL_REG[2-0]
1 GHz	0
500 MHz	1
333.33 MHz	2
250 MHz	3
200 MHz	4
166.66 MHz	5
142.85714 MHz	6
125 MHz	7

11.2.1.4.20.6 64-Bit Timestamp Nudge

The 64-bit **time_stamp** value can be adjusted by writing the **ts_nudge_val[7:0]** register value which is a 2's complement value. A value of 0xff will subtract 1 **RCLK** from the next incremented **time_stamp[63:0]** value. A nudge value of 0x01 will add 1 **RCLK** to the next incremented **time_stamp[63:0]** value. For example, if the current **time_stamp** value is 0x0f06, and **add_val[2:0]**=3, the next incremented timestamp value would be 0x0f0a without a nudge and 0x0f0a +/- **tx_nudge_val[7:0]** with a nudge. The **ts_nudge** value is cleared to zero when the nudge has occurred.

11.2.1.4.20.7 64-bit Timestamp PPM

The 64-bit **time_stamp** can be adjusted by parts per million or by parts per hour. Writing a non-zero value to the **ts_ppm[41:0]** (PPM_High & PPM_High)value enables PPM operations. The adjustment is up or down depending on the **ppm_dir** bit (TS_control_Reg). The **time_stamp** value is increased by the PPM value when **ppm_dir** is cleared and decreased by the PPM value when **ppm_dir** is set.

Parts Per Million example:
To adjust for 100 parts per million the configured value for **ts_ppm[41:0]** is:

1,000,000/100 = decimal 10,000

Parts Per Hour example:
To adjust for 1 part per hour at 1 Ghz **RCLK** the configured value for **ts_ppm[41:0]** is: (1,000,0000,000hz/1pph) * (3600 seconds/hour) = hex 34630B8A000

11.2.1.4.20.8 Event FIFO

The event FIFO contains at least as many locations as two times the number of ports plus 6 locations. Software must service the event FIFO in a timely manner which prevents event FIFO overrun. No overrun indication will be given.

11.2.1.4.20.9 Timestamp Compare Output

The **TS_COMP** function is a software oriented feature that is intended to be replaced going forward by the hardware oriented GENF function. **TS_COMP** is not compatible with timestamp PPM or a non-zero **TS_ADD_VAL** value.

Copyright © 2025 Texas Instruments Incorporated

11.2.1.4.20.9.1 Non-Toggle Mode: 32-bit

The **TS_COMP** output is asserted for **ts_comp_length[31:0] RCLK** periods when the **time_stamp[31:0]** (EVENT_0_REG) value compares with the **ts_comp_val[31:0]** and the length value is non-zero. The **TS_COMP** rising edge occurs three **RCLK** periods after the values compare. A timestamp compare event is pushed into the event FIFO when **TS_COMP** is asserted. The polarity of the **TS_COMP** output is determined by the **ts_comp_polarity** bit. The output is asserted low when the polarity bit is low.

11.2.1.4.20.9.2 Non-Toggle Mode: 64-bit

64-bit mode operation is identical to 32-bit mode except that all 64-bits of the **timestamp[63:0]** are used (Event_0_reg and Event_3_reg) instead of only the lower 32-bits. The 64-bit timestamp cannot be allowed to rollover.

11.2.1.4.20.9.3 Toggle Mode: 32-bit

The **TS_COMP** output is asserted for **ts_comp_len[31:0] RCLK** periods when the **time_stamp[31:0]** value compares with the **ts_comp_low_val[31:0]** and the length value is non-zero. The **TS_COMP** toggles thereafter on **ts_comp_low_len[31:0] RCLK** periods. The length high or low can be adjusted by writing the **TS_COMP_NUDGE[7:0]** register value which is a 2's complement value. A value of 0xff will subtract 1 **RCLK** from the **ts_comp_length[31:0]** value. A value of 0x01 will add 1 **RCLK** to the **ts_comp_length[31:0]** value. Only a single high or low time is adjusted (nudged) and the **ts_comp_nudge** value is cleared to zero when the nudge has occurred. The **TS_COMP** output is asserted low when the **TS_Comp_Polarity** bit is low. No compare events and no **CPTS_EVNT** interrupts are generated in toggle mode. The **ts_comp_tog** bit must be set for toggle mode, and must be set before writing a non-zero value to **ts_comp_length[31:0]**.

11.2.1.4.20.9.4 Toggle Mode: 64-bit

64-bit mode operation is identical to 32-bit mode except that all 64-bits of the TIMESTAMP are used (EVENT_0_REG and EVENT_3_REG). In 32-bit mode only the lower 32-bits (EVENT_0_REG) are used.

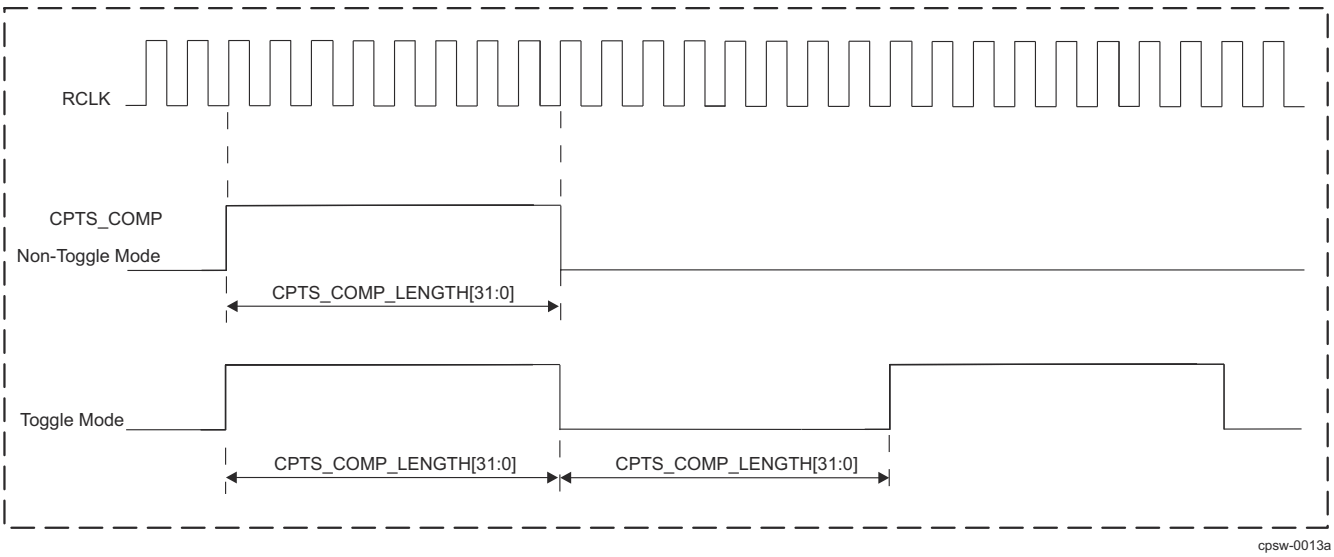

Figure 11-149. CPTS_COMP Output in Toggle and Non-Toggle Mode

11.2.1.4.20.10 Timestamp Sync Output

The CPTS_SYNC output is a selected bit of the [31-0]TIME_STAMP counter value. One of bits 17-31 can be selected in CPTS_CONTROL_REG[31-28] TS_SYNC_SEL. The CPTS_SYNC output is disabled when CPTS_CONTROL_REG[31-28] TS_SYNC_SEL is zero.

If the selected counter bit is 1 at the time when TS_SYNC_SEL value is written then a rising edge will not occur on the CPTS_SYNC output. A rising edge will occur on the CPTS_SYNC output upon the next transition to 1

Copyright © 2025 Texas Instruments Incorporated

of the selected counter bit. The TS_SYNC_SEL value must be written to zero before changing to a different non-zero value. No events are generated due to the CPTS_SYNC operation. The CPTS_SYNC output is two CPTS_RFT_CLK periods after the actual count value.

11.2.1.4.20.11 Timestamp GENFn Output

The CPTS_GENFn outputs have a programmable cycle (frequency) with a PPM feature and software nudge feature. The CPTS_GENFn output cycle is CPSW_GENF0_LENGTH_REG_I[31-0] CPTS_RFT_CLK periods (which is different than CPTS_COMP operation). Figure 11-150 represents the CPTS_GENFn output signal.

The CPTS_GENFn output cycle is CPSW_GENF0_LENGTH_REG_I[31-0] CPTS_RFT_CLK periods beginning when the 64-bit TIME_STAMP value compares with the 64-bit GENFn_COMP value (CPSW_GENF0_COMP_LOW_REG_I and CPSW_GENF0_COMP_HIGH_REG_I registers) and the length value is non-zero. The CPTS_GENFn output cycle repeats thereafter every CPSW_GENF0_LENGTH_REG_I[31-0] CPTS_RFT_CLK periods. The upper 32-bit word should be written first for 64-bit values. The length should be zero while the comparison value and other configuration parameters are being configured. The length should be written non-zero to enable operations last. The first cycle after comparison is active high when the CPSW_CPTS_CONTROL_REG[2] TS_COMP_POLARITY bit is low. No compare events and no CPTS_EVNT interrupts are generated.

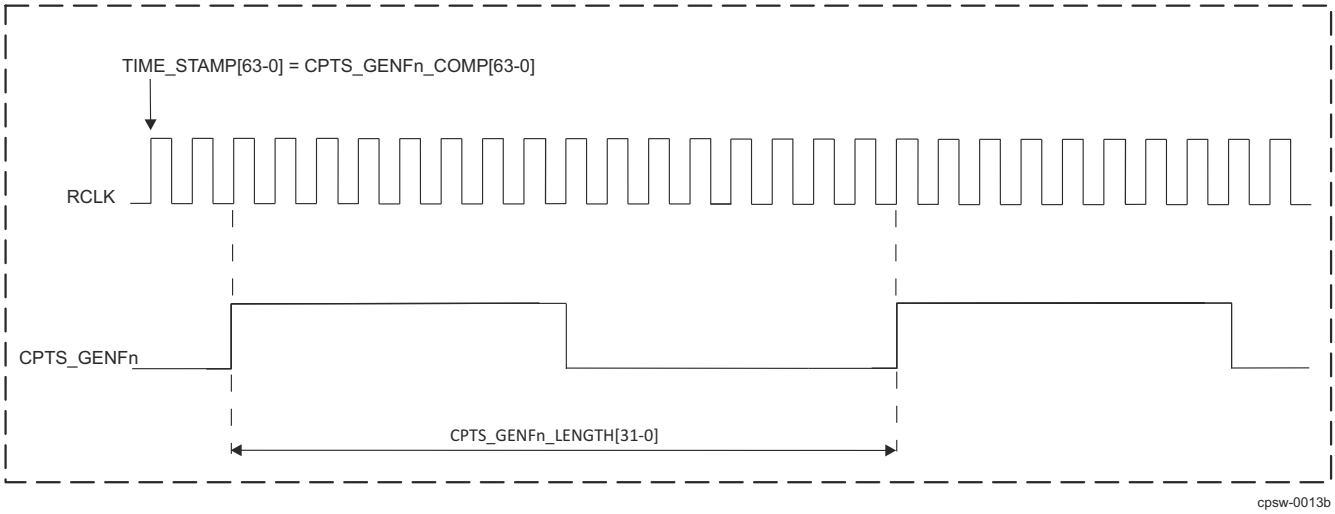

Figure 11-150. CPTS_GENFn Output Signal Diagram

11.2.1.4.20.11.1 GENFn Nudge

The cycle length can be adjusted by writing the CPSW_CPTS_TS_COMP_NUDGE_REG[7-0] NUDGE register value which is a two's complement value. A value of FFh will subtract 1 CPTS_RFT_CLK from the CPSW_GENF0_LENGTH_REG_I[31-0] value. A value of 1h will add 1 CPTS_RFT_CLK to the CPSW0_ESTF1_LENGTH_REG_I[23-0] value. The CPSW_CPTS_TS_COMP_NUDGE_REG[7-0] NUDGE value is cleared to zero when the nudge has occurred.

11.2.1.4.20.11.2 GENFn PPM

The CPTS_GENFn output cycle can be adjusted by parts per million or by parts per hour. Writing a non-zero value to CPSW_GENF0_PPM_LOW_REG_I/ CPSW_GENF0_PPM_HIGH_REG_I enables PPM operations. The PPM counter continually loads and decrements to zero and then loads again. A single CPTS_RFT_CLK adjustment is made when the PPM counter decrements to zero. The adjustment is up or down depending on the CPSW_ESTF1_CONTROL_REG[0] PPM_DIR bit. When PPM_DIR bit is set a single CPTS_RFT_CLK time is subtracted from the generate function counter which has the effect of increasing the generate function frequency by the PPM amount. When PPM_DIR bit is cleared a single CPTS_RFT_CLK time is added to the generate function counter which has the effect of decreasing the generate function frequency by the PPM amount.

Copyright © 2025 Texas Instruments Incorporated

Parts Per Million example:
To adjust for 100 parts per million the configured value for GENF_PPM[41-0] (through CPSW_GENF0_PPM_LOW_REG_I and CPSW_GENF0_PPM_HIGH_REG_I) is:
1,000,000/100 = 10,000(decimal)

Parts Per Hour example:
To adjust for 1 part per hour at 1 GHz CPTS_RFT_CLK the configured value for GENF_PPM[41-0] (through CPSW_GENF0_PPM_LOW_REG_I and CPSW_GENF0_PPM_HIGH_REG_I) is:
(1,000,0000,000Hz/1pph) * (3600 seconds/hour) = 34630B8A000 (hex)

11.2.1.4.20.12 Timestamp ESTFn

Each Ethernet port has a dedicated ESTFn generator which operates identically to the GENFn function.

11.2.1.4.20.13 Time Sync Events

Time Sync events are 96-bit values that are pushed onto the event FIFO and read by software in 32-bit reads. Four 32-bit registers, CPSW_CPTS_EVENT_0_REG through CPSW_CPTS_EVENT_3_REG hold the data of a time sync event. There are eight types of sync events:

- Time Stamp Push Event
- Time Stamp Counter Rollover Event (32-bit mode only)
- Time Stamp Counter Half-rollover Event (32-bit mode only)
- Hardware Time Stamp Push Event
- Ethernet Receive Event
- Ethernet Transmit Event
- Time Stamp Compare Event
- Host Transmit Event

Word	Bit fields																															
	31	**30**	**29**	**28**	**27**	**26**	**25**	**24**	**23**	**22**	**21**	**20**	**19**	**18**	**17**	**16**	**15**	**14**	**13**	**12**	**11**	**10**	**9**	**8**	**7**	**6**	**5**	**4**	**3**	**2**	**1**	**0**
event_0	**time_stamp[31:0]**																															
event_1	reserved		**preempt_queue**	**port_number**					**event_type**				**message_type**				**sequence_id**															
event_2	reserved																								**domain**							
event_3	**time_stamp[63:0]**																															

Copyright © 2025 Texas Instruments Incorporated

Name	Description
time_stamp	Time Stamp – The timestamp is valid for transmit, receive, and time stamp push event types. The timestamp value is not valid for counter roll event types.
port_number	Port Number – indicates the port number of an Ethernet event (1 to 4 encoded) or the hardware push number (1 to 8 encoded).
event_type	Time Sync Event Type 0000 – Time Stamp Push Event 0001 – Time Stamp Rollover Event (32-bit mode only) 0010 – Time Stamp Half Rollover Event (32-bit mode only) 0011 – Hardware Time Stamp Push Event 0100 – Ethernet Receive Event 0101 – Ethernet Transmit Event 0110 – Time Stamp Compare Event 0111 – Host Event 1000 --- - reserved 1111
message_type	Message type – The message type value that was contained in an Ethernet transmit or receive time sync packet. This field is valid only for Ethernet transmit or receive events.
sequence_id	Sequence ID – The 16-bit sequence id is the value that was contained in an Ethernet transmit or receive time sync packet. This field is valid only for Ethernet transmit or receive events.
domain	Domain – The 8-bit domain is the value that was contained in an Ethernet transmit or receive time sync packet. This field is valid only for Ethernet transmit or receive events.
prempt_queue	Prempt Queue – 0 – The packet was received/transmitted on the express queue. 1 – The packet was received/transmitted on the prempt queue.

11.2.1.4.20.13.1 Time Stamp Push Event

Software can obtain the current time stamp value (at the time of the write) by initiating a time stamp push event. The push event is initiated by setting the TS_PUSH bit of the CPSW_CPTS_TS_PUSH_REG register. The time stamp value is returned in the event, along with a time stamp push event code. The upper 32-bits (CPSW_CPTS_EVENT_3_REG register) of the timestamp are zero in 32-bit mode.

11.2.1.4.20.13.2 Time Stamp Counter Rollover Event (32-bit mode only)

The CPTS module contains a 32-bit time stamp value (CPSW_CPTS_EVENT_0_REG). The counter upper bits are maintained by host software. The rollover event indicates to software that the time stamp counter has rolled over from 0xFFFF FFFF to 0x0000 0000 and the software-maintained upper count value should be incremented. This event occurs only in 32-bit mode.

11.2.1.4.20.13.3 Time Stamp Counter Half-rollover Event (32-bit mode only)

The CPTS includes a time stamp counter half-rollover event. The half-rollover event indicates to software that the time stamp value (CPSW_CPTS_EVENT_0_REG[31-0] TIME_STAMP) has incremented from 0x7FFF FFFF to 0x8000 0000. The half-rollover event is included to enable software to correct a misaligned event condition. This event occurs only in 32-bit mode.

The half-rollover event is included to enable software to determine the correct time for each event that contains a valid time stamp value, such as an Ethernet event. If an Ethernet event occurs around a counter rollover (full rollover), the rollover event could possibly be loaded into the event FIFO before the Ethernet event, even though the Ethernet event time was actually taken before the rollover. Figure 11-151 shows a misalignment condition. This misaligned event condition arises because an Ethernet event time stamp occurs at the beginning of a

Copyright © 2025 Texas Instruments Incorporated

packet and time passes before the packet is determined to be a valid synchronization packet. The misaligned event condition occurs if the rollover occurs in the middle, after the packet time stamp has been taken, but before the packet has been determined to be a valid time sync packet.

Host software must detect and correct for misaligned event conditions. For every event time stamp after a rollover and before a half-rollover, software must examine the time stamp most significant bit. If bit 31 of the time stamp value is low (0x0000 0000 through 0x7FFF FFFF), then the event time stamp was taken after the rollover and no correction is required. If the value is high (0x8000 0000 through 0xFFFF FFFF), the time stamp value was taken before the rollover and a misalignment is detected. The misaligned case indicates to software that it must subtract one from the upper count value stored in software to calculate the correct time for the misaligned event. The misaligned event occurs only on the rollover boundary and not on the half-rollover boundary. Software only needs to check for misalignment from a rollover event to a half-rollover event.

When a rollover occurs, software increments the software time stamp upper value. The misaligned case indicates to software that the misaligned event time stamp has a valid upper value that is pre-increment, so one must be subtracted from the upper value to allow software to calculate the correct time for the misaligned event.

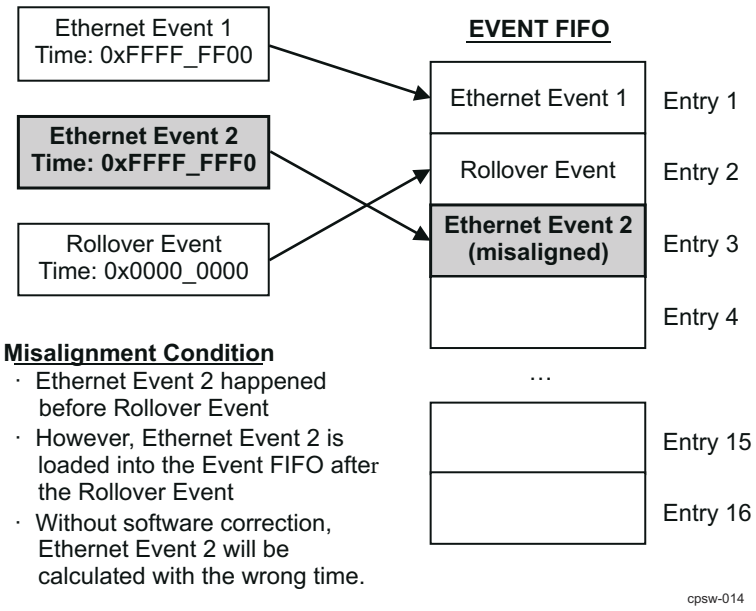

Figure 11-151. Event FIFO Misalignment Condition

11.2.1.4.20.13.4 Hardware Time Stamp Push Event

There are four hardware time stamp inputs (CPTS_HW[1:4]_TS_PUSH events) that can cause hardware time stamp push events to be loaded into the Event FIFO. Each time stamp input is mapped in the device as shown in Figure 11-147. The event is loaded into the event FIFO on the rising edge of the timer, and the PORT_NUMBER field in the CPSW_CPTS_EVENT_1_REG register indicates the hardware push input that caused the event (encoded).

The hardware time stamp inputs are asynchronous and are low frequency signals. The CPTS logic synchronizes and performs a rising edge detect on the incoming asynchronous input.

Each hardware time stamp input must be asserted for at least 10 periods of the selected CPTS_RFT_CLK clock. Each input can be enabled or disabled by setting the respective bits in the CPSW_CPTS_CONTROL_REG register.

Copyright © 2025 Texas Instruments Incorporated

Hardware time stamps are intended to be an extremely low frequency signals, such that the event FIFO does not overrun. Software must keep up with the event FIFO and ensure that there is no overrun, or events will be lost.

11.2.1.4.20.13.5 Ethernet Port Events

Packets transmitted or received on each Ethernet port can generate Ethernet Transmit Events or Ethernet Receive Events, respectively. The CPTS hardware will decode each packet to determine if it is a valid CPTS time sync event.

According to the IEEE 802.3 Ethernet standard, each Ethernet frame contains a 2-octet EtherType field to indicate which protocol is encapsulated in the PayLoad field, as shown in Figure 11-152. For standard time sync packets, this will contain the EtherType for the Precision Time Protocol (IEEE 1588), which is defined as 0x88F7. The CPTS hardware will compare this field to the TS_LTYPE1 field in the CPSW_PN_TS_SEQ_LTYPE_REG register or the TS_LTYPE2 field in CPSW_PN_TS_CTL_LTYPE2_REG register (depending on which enable bit was set) , which should also be programmed to 88F7h.

When a virtual LAN is used, an additional 4-octet 802.1Q tag is inserted in the Ethernet frame before the EtherType field, as shown in Figure 11-152. To indicate to the CPTS hardware that a virtual LAN is in use, the TS_TX_VLAN_LTYPE1_EN (or TS_TX_VLAN_LTYPE2_EN) enable bit must be set in the CPSW_PN_TS_CTL_REG register. The EtherType for the 802.1Q tag is defined as 0x8100, and the CPTS hardware will compare this value to the TS_VLAN_LTYPE1 (or TS_VLAN_LTYPE2 depending on which enable bit was set) field in the CPSW_PN_TS_VLAN_LTYPE_REG register, which should also be programmed to 0x8100.

When two stacked VLANs are used, two additional 4-octet 801.Q tags are inserted in the Ethernet frame before the EtherType field, as shown in Figure 11-152. In this case, both TS_VLAN_LTYPE1 and TS_VLAN_LTYPE2 must be enabled. The outer tag must match the value of the TS_VLAN_LTYPE1 field, and the inner tag must match the value of the TS_VLAN_LTYPE2 field.

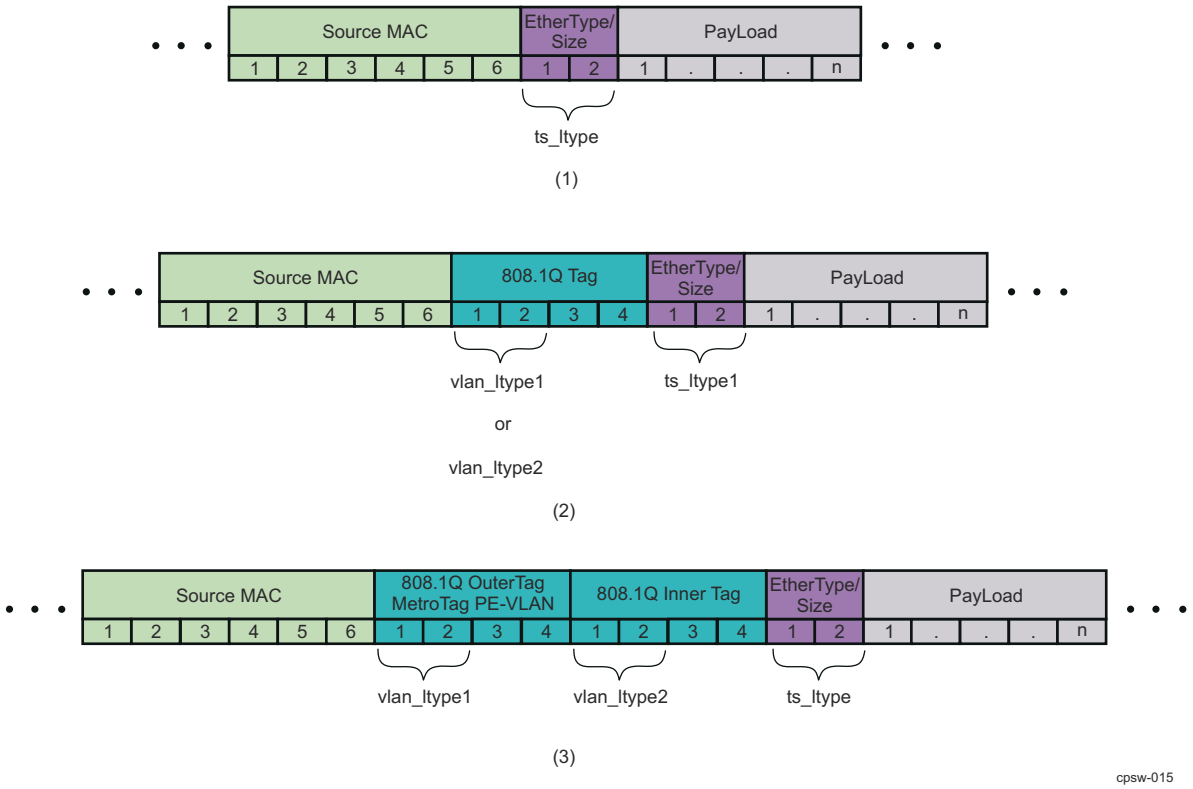

Figure 11-152. Partial Ethernet-II Frames Showing Register Mapping of EtherTypes for a Simple Frame (1), a Single 1Q Tag Added (2), and Two 1Q Tags Added (3)

Copyright © 2025 Texas Instruments Incorporated

11.2.1.4.20.13.5.1 Ethernet Port Receive Event

This section describes Ethernet port receive events. Ethernet port generates time synchronization events for valid received time sync packets. For every packet received on the Ethernet port, a timestamp will be captured by the receive module inside the CPTS for the corresponding port. The time stamp will be captured by the receive module regardless of whether or not the packet is a time synchronization packet to make sure that the time stamp is captured as soon as possible. The packet is sampled on both the rising and falling edges of the CPTS_RFT_CLK, and the time stamp will be captured once the start of frame delimiter for the receive packet is detected.

After the time stamp has been captured, the receive interface will begin parsing the packet to determine if it is a valid Ethernet time synchronization packet. The CPSW decoder determines if the packet is a valid Ethernet receive time synchronization event. The receive interface for the port will use the following criteria to determine if the packet is a valid Annex D, Annex E, or Annex F time synchronization Ethernet receive event:

Annex D (IPv4)

1. Receive annex D time sync is enabled (TS_RX_ANNEX_D_EN is set in the CPSW_PN_TS_CTL_REG register).
2. One of the sequences below is true.
   a. The first packet LTYPE matches 0x0800
   b. The first packet LTYPE matches TS_VLAN_LTYPE1 in the CPSW_PN_TS_VLAN_LTYPE_REG register and TS_RX_VLAN_LTYPE1_EN is set in the CPSW_PN_TS_CTL_REG register and the second packet LTYPE matches 0x0800
   c. The first packet LTYPE matches TS_VLAN_LTYPE2 in the CPSW_PN_TS_VLAN_LTYPE_REG register and TS_RX_VLAN_LTYPE2_EN is set in the CPSW_PN_TS_CTL_REG register and the second packet LTYPE matches 0x0800
   d. The first packet LTYPE matches TS_VLAN_LTYPE1 in the CPSW_PN_TS_VLAN_LTYPE_REG register and TS_RX_VLAN_LTYPE1_EN is set in the CPSW_PN_TS_CTL_REG register and the second packet LTYPE matches TS_VLAN_LTYPE2 in the CPSW_PN_TS_VLAN_LTYPE_REG register and TS_RX_VLAN_LTYPE2_EN is set in the CPSW_PN_TS_CTL_REG register and the third packet LTYPE matches 0x0800
3. Byte 14 (the byte after the LTYPE) contains 0x45 (IPv4).

Note

The byte numbering assumes that there are no VLANs. The byte number is intended to show the relative order of the bytes.

4. Byte 20 contains 0bXXX00000 (5 lower bits zero) and Byte 21 contains 0x00 (fragment offset zero)
5. Byte 22 contains 0x01 (HOP Limit = 1) if the TS_TTL_NONZERO bit in the switch CPSW_PN_TS_CTL_LTYPE2_REG register is cleared to 0h, or byte 22 contains any value if CPSW_PN_TS_CTL_LTYPE2_REG is set to 1h. Byte 22 is the TTL/HOP field.
6. Byte 23 contains 0x11 (Next Header UDP Fixed).
7. The TS_UNI_EN bit in the CPSW_PN_TS_CTL_LTYPE2_REG register is cleared to 0h and Bytes 30 through 33 contain:
   a. Decimal 224.0.1.129 and the TS_129 bit in the CPSW_PN_TS_CTL_LTYPE2_REG register is set, or
   b. Decimal 224.0.1.130 and the TS_130 bit in the CPSW_PN_TS_CTL_LTYPE2_REG register is set, or
   c. Decimal 224.0.1.131 and the TS_131 bit in the CPSW_PN_TS_CTL_LTYPE2_REG register is set, or
   d. Decimal 224.0.1.132 and the TS_132 bit in the CPSW_PN_TS_CTL_LTYPE2_REG register is set, or
   e. Decimal 224.0.0.107 and the TS_107 bit in the CPSW_PN_TS_CTL_LTYPE2_REG register is set

   -OR-

   The TS_UNI_EN bit in the CPSW_PN_TS_CTL_LTYPE2_REG register is set and Bytes 30 through 33 contain any values.
8. Bytes 36 and 37 contain:

Copyright © 2025 Texas Instruments Incorporated

a. Decimal 0x01 and 0x3F respectively and the TS_319 bit in the CPSW_PN_TS_CTL_LTYPE2_REG register is set -OR-
b. Decimal 0x01 and 0x40 respectively and the TS_320 bit in the CPSW_PN_TS_CTL_LTYPE2_REG register is set.

9. The PTP message begins in byte 42.
10. The packet message type is enabled in the TS_MSG_TYPE_EN field in the CPSW_PN_TS_CTL_REG register.
11. The packet was received without error (not long/short/mac_ctl/CRC/code/align).

Annex E (IPv6)

1. Receive annex E time sync is enabled (TS_RX_ANNEX_E_EN bit is set in the switch CPSW_PN_TS_CTL_REG register).
2. One of the sequences below is true.
   a. The first packet LTYPE matches 0x86dd.
   b. The first packet LTYPE matches TS_VLAN_LTYPE1 in the CPSW_PN_TS_VLAN_LTYPE_REG register and TS_RX_VLAN_LTYPE1_EN is set in the CPSW_PN_TS_CTL_REG register and the second packet LTYPE matches 0x86dd
   c. The first packet LTYPE matches TS_VLAN_LTYPE2 in the CPSW_PN_TS_VLAN_LTYPE_REG register and TS_RX_VLAN_LTYPE2_EN is set in the CPSW_PN_TS_CTL_REG register and the second packet LTYPE matches 0x86dd
   d. The first packet LTYPE matches TS_VLAN_LTYPE1 in the CPSW_PN_TS_VLAN_LTYPE_REG register and TS_RX_VLAN_LTYPE1_EN is set in the CPSW_PN_TS_CTL_REG register and the second packet LTYPE matches TS_VLAN_LTYPE2 in the CPSW_PN_TS_VLAN_LTYPE_REG register and TS_RX_VLAN_LTYPE2_EN is set in the CPSW_PN_TS_CTL_REG register and the third packet LTYPE matches 0x86dd
3. Byte 14 (the byte after the LTYPE) contains 0x6X (IPv6).
4. Byte 20 contains 0x11 (UDP Fixed Next Header).
5. Byte 21 contains 0x01 (Hop Limit = 1) if the TS_TTL_NONZERO bit in the switch CPSW_PN_TS_CTL_LTYPE2_REG register is cleared to 0h, or byte 21 contains any value if TS_TTL_NONZERO is set to 1h. Byte 21 is the TTL/HOP field.
6. The TS_UNI_EN bit in the CPSW_PN_TS_CTL_LTYPE2_REG register is cleared to 0 and Bytes 38 through 53 contain:
   a. FF0M:0:0:0:0:0:0:0181 and the TS_129 bit in the CPSW_PN_TS_CTL_LTYPE2_REG register is set, or
   b. FF0M:0:0:0:0:0:0:0182 and the TS_130 bit in the CPSW_PN_TS_CTL_LTYPE2_REG register is set, or
   c. FF0M:0:0:0:0:0:0:0183 and the TS_131 bit in the CPSW_PN_TS_CTL_LTYPE2_REG register is set, or
   d. FF0M:0:0:0:0:0:0:0184 and the TS_132 bit in the CPSW_PN_TS_CTL_LTYPE2_REG register is set, or
   e. FF0M:0:0:0:0:0:0:006B and the TS_107 bit in the CPSW_PN_TS_CTL_LTYPE2_REG register is set

   Note

   All values above are 16-bit hex numbers where M is enabled in the TS_MCAST_TYPE_EN field in the CPSW_PN_TS_CTL2_REG register.

   -OR-

   The TS_UNI_EN bit in the CPSW_PN_TS_CTL_LTYPE2_REG register is set to 1 and Bytes 38 through 53 contain any value.
7. Bytes 56 and 57 contain (UDP Header in bytes 54 through 61):
   a. Decimal 0x01 and 0x3F respectively and the TS_319 bit in the CPSW_PN_TS_CTL2_REG register is set, or
   b. Decimal 0x01 and 0x40 respectively and the TS_320 bit in the CPSW_PN_TS_CTL2_REG register is set.
8. The PTP message begins in byte 62.

Copyright © 2025 Texas Instruments Incorporated

9. The packet message type is enabled in the MSG_TYPE_EN field in the CPSW_PN_TS_CTL2_REG register.
10. The packet was received without error (not long/short/mac_ctl/CRC/code/align).

Annex F (IEEE 802.3)

1. Receive Annex F time sync is enabled (TS_RX_ANNEX_F_EN is set in the switch CPSW_PN_TS_CTL_REG register).
2. One of the sequences below is true:
   a. The first packet LTYPE matches TS_LTYPE1 in the CPSW_PN_TS_SEQ_LTYPE_REG register. LTYPE 1 should be used when only one time sync LTYPE is to be enabled.
   b. The first packet LTYPE matches TS_LTYPE2 in the CPSW_PN_TS_CTL_LTYPE2_REG register and LTYPE2_EN is set in the CPSW_PN_TS_CTL_REG register.
   c. The first packet LTYPE matches TS_VLAN_LTYPE1 in the CPSW_PN_TS_VLAN_LTYPE_REG register and TS_RX_VLAN_LTYPE1_EN is set in the CPSW_PN_TS_CTL_REG register and the second packet LTYPE matches TS_LTYPE1 in the CPSW_PN_TS_SEQ_LTYPE_REG register
   d. The first packet LTYPE matches TS_VLAN_LTYPE1 in the CPSW_PN_TS_VLAN_LTYPE_REG register and TS_RX_VLAN_LTYPE1_EN is set in the CPSW_PN_TS_CTL_REG register and the second packet LTYPE matches TS_LTYPE2 in the CPSW_PN_TS_CTL_LTYPE2_REG register and TS_LTYPE2_EN is set in the CPSW_PN_TS_CTL_REG register.
   e. The first packet LTYPE matches TS_VLAN_LTYPE2 in the CPSW_PN_TS_VLAN_LTYPE_REG register and TS_RX_VLAN_LTYPE2_EN is set in the CPSW_PN_TS_CTL_REG register and the second packet LTYPE matches TS_LTYPE1 in the CPSW_PN_TS_SEQ_LTYPE_REG register.
   f. The first packet LTYPE matches TS_VLAN_LTYPE2 in the CPSW_PN_TS_VLAN_LTYPE_REG register and TS_RX_VLAN_LTYPE2_EN is set in the CPSW_PN_TS_CTL_REG register and the second packet LTYPE matches TS_LTYPE2 in the CPSW_PN_TS_CTL_LTYPE2_REG register and TS_LTYPE2_EN is set in the CPSW_PN_TS_CTL_REG register.
   g. The first packet LTYPE matches TS_VLAN_LTYPE1 in the CPSW_PN_TS_VLAN_LTYPE_REG register and TS_RX_VLAN_LTYPE1_EN is set in the CPSW_PN_TS_CTL_REG register and the second packet LTYPE matches TS_VLAN_LTYPE2 in the CPSW_PN_TS_VLAN_LTYPE_REG register and TS_RX_VLAN_LTYPE2_EN is set in the CPSW_PN_TS_CTL_REG register and the third packet LTYPE matches TS_LTYPE1 in the CPSW_PN_TS_SEQ_LTYPE_REG register.
   h. The first packet LTYPE matches TS_VLAN_LTYPE1 in the CPSW_PN_TS_VLAN_LTYPE_REG register and TS_RX_VLAN_LTYPE1_EN is set in the CPSW_PN_TS_CTL_REG register and the second packet LTYPE matches TS_VLAN_LTYPE2 in the CPSW_PN_TS_VLAN_LTYPE_REG register and TS_RX_VLAN_LTYPE2_EN is set in the CPSW_PN_TS_CTL_REG register and the third packet LTYPE matches TS_LTYPE2 in the CPSW_PN_TS_CTL_LTYPE2_REG register and TS_LTYPE2_EN is set in the CPSW_PN_TS_CTL_REG register
3. The PTP message begins in the byte after the LTYPE.
4. The packet message type is enabled in the TS_MSG_TYPE_EN field in the CPSW_PN_TS_CTL_REG register.
5. The packet was received without error (not long/short/mac_ctl/CRC/code/align).

If all of the criteria described above are met for either Annex D, Annex E, or Annex F, and the packet is determined to be a valid time synchronization packet, then the RX interface will push an Ethernet receive event into the event FIFO.

11.2.1.4.20.13.5.2 Ethernet Port Transmit Event

This section describes Ethernet port transmit events. For every packet transmitted on the Ethernet ports, the port transmit interface will begin parsing the packet to determine if it is a valid Ethernet time synchronization packet. The CPTS transmit interface for the port will use to the following criteria to determine if the packet is a valid time synchronization Ethernet transmit event. The CPSW decoder determines if the packet is a valid ethernet receive time synchronization event. To be a valid Ethernet transmit time synchronization event, the conditions listed below must be true for either Annex D, Annex E, or Annex F:

Copyright © 2025 Texas Instruments Incorporated

Annex D (IPv4)

1. Transmit time sync is enabled (TS_TX_ANNEX_D_EN is set in the CPSW_PN_TS_CTL_REG register).
2. One of the sequences below is true.
   a. The first packet LTYPE matches 0x0800
   b. The first packet LTYPE matches TS_VLAN_LTYPE1 in the CPSW_PN_TS_VLAN_LTYPE_REG register and TS_TX_VLAN_LTYPE1_EN is set in the CPSW_PN_TS_CTL_REG register and the second packet LTYPE matches 0x0800
   c. The first packet LTYPE matches TS_VLAN_LTYPE2 in the CPSW_PN_TS_VLAN_LTYPE_REG register and TS_TX_VLAN_LTYPE2_EN is set in the CPSW_PN_TS_CTL_REG register and the second packet LTYPE matches 0x0800
   d. The first packet LTYPE matches TS_VLAN_LTYPE1 in the CPSW_PN_TS_VLAN_LTYPE_REG register and TS_TX_VLAN_LTYPE1_EN is set in the CPSW_PN_TS_CTL_REG register and the second packet LTYPE matches TS_VLAN_LTYPE2 in the CPSW_PN_TS_VLAN_LTYPE_REG register and TS_TX_VLAN_LTYPE2_EN is set in the CPSW_PN_TS_CTL_REG register and the third packet LTYPE matches 0x0800
3. Byte 14 (the byte after the LTYPE) contains 0x45 (IPv4).

Note

The byte numbering assumes that there are no VLANs. The byte number is intended to show the relative order of the bytes.

4. Byte 20 contains 0bXXX00000 (5 lower bits zero) and Byte 21 contains 0x00 (fragment offset zero)
5. Byte 22 contains 0x01 (HOP Limit = 1) if the TS_TTL_NONZERO bit in the switch CPSW_PN_TS_CTL_LTYPE2_REG register is cleared to 0h, or byte 22 contains any value if TS_TTL_NONZERO is set to 1h. Byte 22 is the TTL/HOP field.
6. Byte 23 contains 0x11 (Next Header UDP Fixed).
7. The TS_UNI_EN bit in the CPSW_PN_TS_CTL_LTYPE2_REG register is cleared to 0h and Bytes 30 through 33 contain:
   a. Decimal 224.0.1.129 and the TS_129 bit in the CPSW_PN_TS_CTL_LTYPE2_REG register is set, or
   b. Decimal 224.0.1.130 and the TS_130 bit in the CPSW_PN_TS_CTL_LTYPE2_REG register is set, or
   c. Decimal 224.0.1.131 and the TS_131 bit in the CPSW_PN_TS_CTL_LTYPE2_REG register is set, or
   d. Decimal 224.0.1.132 and the TS_132 bit in the CPSW_PN_TS_CTL_LTYPE2_REG register is set, or
   e. Decimal 224.0.0.107 and the TS_107 bit in the CPSW_PN_TS_CTL_LTYPE2_REG register is set, or
   f. The TS_UNI_EN bit in the CPSW_PN_TS_CTL_LTYPE2_REG register is set and Bytes 30 through 33 contain any values.
8. Bytes 36 and 37 contain:
   a. Decimal 0x01 and 0x3F respectively and the TS_319 bit in the CPSW_PN_TS_CTL_LTYPE2_REG register is set, or
   b. Decimal 0x01 and 0x40 respectively and the TS_320 bit in the CPSW_PN_TS_CTL_LTYPE2_REG register is set.
9. The PTP message begins in byte 42.
10. The packet message type is enabled in the TS_MSG_TYPE_EN field in the CPSW_PN_TS_CTL_REG register.
11. The packet was sent by host port 0.

Annex E (IPv6)

1. Transmit annex E time sync is enabled (TS_TX_ANNEX_E_EN bit is set in the switch CPSW_PN_TS_CTL_REG register).
2. One of the sequences below is true.
   a. The first packet LTYPE matches 0x86dd.

Copyright © 2025 Texas Instruments Incorporated

   b. The first packet LTYPE matches TS_VLAN_LTYPE1 in the CPSW_PN_TS_VLAN_LTYPE_REG register and TS_TX_VLAN_LTYPE1_EN is set in the CPSW_PN_TS_CTL_REG register and the second packet LTYPE matches 0x86dd
   c. The first packet LTYPE matches TS_VLAN_LTYPE2 in the CPSW_PN_TS_VLAN_LTYPE_REG register and TS_TX_VLAN_LTYPE2_EN is set in the CPSW_PN_TS_CTL_REG register and the second packet LTYPE matches 0x86dd
   d. The first packet LTYPE matches TS_VLAN_LTYPE1 in the CPSW_PN_TS_VLAN_LTYPE_REG register and TS_TX_VLAN_LTYPE1_EN is set in the CPSW_PN_TS_CTL_REG register and the second packet LTYPE matches TS_VLAN_LTYPE2 in the CPSW_PN_TS_VLAN_LTYPE_REG register and TS_TX_VLAN_LTYPE2_EN is set in the CPSW_PN_TS_CTL_REG register and the third packet LTYPE matches 0x86dd

3. Byte 14 (the byte after the LTYPE) contains 0x6X (IPv6).
4. Byte 20 contains 0x11 (UDP Fixed Next Header).
5. Byte 21 contains 0x01 (Hop Limit = 1) if the TS_TTL_NONZERO bit in the switch CPSW_PN_TS_CTL_LTYPE2_REG register is cleared to 0h, or byte 21 contains any value if TS_TTL_NONZERO is set to 1h. Byte 21 is the TTL/HOP field..
6. The TS_UNI_EN bit in the CPSW_PN_TS_CTL_LTYPE2_REG register is cleared to 0 and Bytes 38 through 53 contain:
   a. FF0M:0:0:0:0:0:0:0181 and the TS_129 bit in the CPSW_PN_TS_CTL_LTYPE2_REG register is set, or
   b. FF0M:0:0:0:0:0:0:0182 and the TS_130 bit in the CPSW_PN_TS_CTL_LTYPE2_REG register is set, or
   c. FF0M:0:0:0:0:0:0:0183 and the TS_131 bit in the CPSW_PN_TS_CTL_LTYPE2_REG register is set, or
   d. FF0M:0:0:0:0:0:0:0184 and the TS_132 bit in the CPSW_PN_TS_CTL_LTYPE2_REG register is set, or
   e. FF0M:0:0:0:0:0:0:006B and the TS_107 bit in the CPSW_PN_TS_CTL_LTYPE2_REG register is set

   Note

   All values above are 16-bit hex numbers where M is enabled in the TS_MCAST_TYPE_EN field in the CPSW_PN_TS_CTL2_REG register.

   -OR-

   The TS_UNI_EN bit in the CPSW_PN_TS_CTL_LTYPE2_REG register is set to 1h and Bytes 38 through 53 contain any value.

7. Bytes 56 and 57 contain (UDP Header in bytes 54 through 61):
   a. Decimal 0x01 and 0x3F respectively and the TS_319 bit in the CPSW_PN_TS_CTL_LTYPE2_REG register is set, or
   b. Decimal 0x01 and 0x40 respectively and the TS_320 bit in the CPSW_PN_TS_CTL_LTYPE2_REG register is set.
8. The PTP message begins in byte 62.
9. The packet message type is enabled in the TS_MSG_TYPE_EN field in the CPSW_PN_TS_CTL_REG register.
10. The packet was sent by host port 0.

Annex F (IEEE 802.3)

1. Transmit time sync is enabled (TS_TX_ANNEX_F_EN is set in the switch CPSW_PN_TS_CTL_REG register).
2. One of the sequences below is true:
   a. The first packet LTYPE matches TS_LTYPE1 in the CPSW_PN_TS_SEQ_LTYPE_REG register. LTYPE 1 should be used when only one time sync LTYPE is to be enabled.
   b. The first packet LTYPE matches TS_LTYPE2 in the CPSW_PN_TS_CTL_LTYPE2_REG register and TS_LTYPE2_EN is set in the CPSW_PN_TS_CTL_REG register.

Copyright © 2025 Texas Instruments Incorporated

c. The first packet LTYPE matches TS_VLAN_LTYPE1 in the CPSW_PN_TS_VLAN_LTYPE_REG register and TS_TX_VLAN_LTYPE1_EN is set in the CPSW_PN_TS_CTL_REG register and the second packet LTYPE matches TS_LTYPE2 in the CPSW_PN_TS_CTL_LTYPE2_REG register.
d. The first packet LTYPE matches TS_VLAN_LTYPE2 in the CPSW_PN_TS_VLAN_LTYPE_REG register and TS_TX_VLAN_LTYPE2_EN is set in the CPSW_PN_TS_CTL_REG register and the second packet LTYPE matches TS_LTYPE1 in the CPSW_PN_TS_SEQ_LTYPE_REG register.
e. The first packet LTYPE matches TS_VLAN_LTYPE2 in the CPSW_PN_TS_VLAN_LTYPE_REG register and TS_TX_VLAN_LTYPE2_EN is set in the CPSW_PN_TS_CTL_REG register and the second packet LTYPE matches TS_LTYPE2 in the CPSW_PN_TS_CTL_LTYPE2_REG register.
f. The first packet LTYPE matches TS_VLAN_LTYPE1 in the CPSW_PN_TS_VLAN_LTYPE_REG register and TS_TX_VLAN_LTYPE1_EN is set in the CPSW_PN_TS_CTL_REG register and the second packet LTYPE matches TS_LTYPE2 in the CPSW_PN_TS_CTL_LTYPE2_REG register and TS_LTYPE2_EN is set in the CPSW_PN_TS_CTL_REG register.
g. The first packet LTYPE matches TS_VLAN_LTYPE1 in the CPSW_PN_TS_VLAN_LTYPE_REG register and TS_TX_VLAN_LTYPE1_EN is set in the CPSW_PN_TS_CTL_REG register and the second packet LTYPE matches TS_VLAN_LTYPE2 in the CPSW_PN_TS_VLAN_LTYPE_REG register and TS_TX_VLAN_LTYPE2_EN is set in the CPSW_PN_TS_CTL_REG register and the third packet LTYPE matches TS_LTYPE2 in the CPSW_PN_TS_CTL_LTYPE2_REG register.
h. The first packet LTYPE matches TS_VLAN_LTYPE1 in the CPSW_PN_TS_VLAN_LTYPE_REG register and TS_TX_VLAN_LTYPE1_EN is set in the CPSW_PN_TS_CTL_REG register and the second packet LTYPE matches TS_VLAN_LTYPE2 in the CPSW_PN_TS_VLAN_LTYPE_REG register and TS_TX_VLAN_LTYPE2_EN is set in the CPSW_PN_TS_CTL_REG register and the third packet LTYPE matches TS_LTYPE2 in the CPSW_PN_TS_CTL_LTYPE2_REG register and TS_LTYPE2_EN is set in the CPSW_PN_TS_CTL_REG register

3. The packet message type is enabled in the TS_MSG_TYPE_EN field in the CPSW_PN_TS_CTL_REG register.
4. The packet was sent by host port 0.

If all of the criteria described above are met, and the packet is determined to be a valid time synchronization packet, then the time stamp for the transmit event will not be generated until the start of frame delimiter of the packet is actually transmitted. The start of frame delimiter will be sampled on every rising and falling edge of the CPTS_RFT_CLK. Once the packet is transmitted, then the TX interface will push an Ethernet transmit event into the event FIFO.

11.2.1.4.20.13.5.3

Table 11-289. Values of Message Type Field

Message Type	Value (hex)
Sync	0
Delay_Req	1
Pdelay_Req	2
Pdelay_Resp	3
Reserved	4:7
Follow_Up	8
Delay_Resp	9
Pdelay_Resp_Follow_Up	A
Announce	B
Signaling	C
Management	D
Reserved	E:F

Copyright © 2025 Texas Instruments Incorporated

Once a transmitted or received packet is determined to be a valid time sync packet, the Ethernet Transmit Event or Ethernet Receive Event is loaded onto the Event FIFO.

The CPTS_EVENT_1 register contains the Message Type and Sequence ID values from the original time sync packet. The CPTS_EVENT_0 (and CPTS_EVENT_3) register contains the time stamp value when the packet arrived at the corresponding port.

11.2.1.4.20.14 Timestamp Compare Event

Note

Timestamp compare events are generated for non-toggle mode only.

The CPTS can generate an event for a time stamp comparison in 32-bit or 64-bit mode.

11.2.1.4.20.14.1 32-Bit Mode

The CPTS_COMP output is also asserted when the event is generated. The event is generated when the 32-bit time stamp value (EVENT_0_REG) compares with the CPSW_CPTS_TS_COMP_VAL_REG register and the CPSW_CPTS_TS_COMP_LEN_REG value is non-zero. The CPSW_CPTS_TS_COMP_LEN_REG value should be written by software after the CPSW_CPTS_TS_COMP_VAL_REG register is written and should be zero when the comparison value is written.

11.2.1.4.20.14.2 64-Bit Mode

The CPTS_COMP output is also asserted when the event is generated. The event is generated when the 64-bit time stamp value (CPSW_CPTS_EVENT_0_REG and CPSW_CPTS_EVENT_3_REG) compares with the CPWS0_TS_COMP_VAL_REG and CPWS0_TS_COMP_HIGH_VAL_REG registers and the CPWS0_TS_COMP_LEN_REG value is non-zero. The CPWS0_TS_COMP_LEN_REG value should be written by software after the CPWS0_TS_COMP_VAL_REG register is written and should be zero when the comparison value is written.

11.2.1.4.20.15 Host Transmit Event

The host can send a packet to be transmitted on an Ethernet port that will generate a time synchronization event. The host sets the TSTAMP_EN bit and sends the DOMAIN, MESSAGE_TYPE, and SEQUENCE_ID in the additional control information that resides in the protocol specific section of the descriptor that is transmitted to the CPSW_2G. An event is then generated and placed on the event FIFO once the packet is transmitted. Host events allow the user to timestamp exactly when a software generated packet exits the device.

11.2.1.4.20.16 CPTS Interrupt Handling

The **TS_PEND** interrupt is enabled by writing a logic high to the **ts_int_enable** bit in the interrupt enable register. The raw interrupt value (before the enable) can be read by reading the **TS_Instat_raw** register. The enabled interrupt value can be read by reading the **TS_Instat_masked** register.

Software can process time sync events via interrupts in the following way:

1. Enable the **TS_PEND** interrupt by writing a logic high to bit zero of the **TS_Int_enable** register.
2. Upon interrupt, read the **Event_0-4** register values.
3. Write logic high to bit-0 of the **Event_Pop** register to pop the previously read value off of the event FIFO.
4. Process the end of interrupt as required by the upper level modules (outside the scope of CPTS).

Software has the option of processing more than a single event from the event FIFO in the interrupt service routine in the following way:

1. Enable the **TS_PEND** interrupt by writing a logic high to bit zero of the **TS_Int_enable** register.
2. Upon interrupt enter the CPTS service routine.
3. Read the **Event_0-4** register values.
4. Write a logic high to bit-0 of the **Event_Pop** register to pop the previously read value off of the event FIFO.
5. Wait for an amount of time greater than four **RCLK** periods plus four **VBUSP_CLK** periods.

Copyright © 2025 Texas Instruments Incorporated

6. Read bit 0 (**ts_pend_raw**) in the **TS_Intstat_raw** register to determine if another valid event is in the event FIFO. If bit zero is asserted then go to step 3. If bit 0 is not asserted then go to step 7.
7. Process the end of interrupt as required by the upper level modules (outside the scope of CPTS).

Software also has the option of disabling the interrupt and polling the **ts_intstat_raw** bit to determine if a valid event is on the event FIFO.

11.2.1.4.21 MII Management Interface (MDIO)

The MII Management interface module implements the 802.3 serial management interface to interrogate and control external Ethernet PHY using a two-wire bus.

Features Supported

- Clause 22 and CLuse 45 support
- Supports up to 32 PHY addresses.
- Two user access registers to control and monitor up to two PHYs simultaneously.
- VBUS 3.0 compliant slave interface for configuration and control.
- Each PHY can be individually enabled to be polled.
- The inter-poll gap between PHY polls can be changed.
- State Change Mode of operation to monitor up to 32 PHYs simultaneously.
- The MDIO interface can be manually controlled by software for GPIO operations.

11.2.1.4.21.1 MDIO Frame Formats

Clause 22

Table 11-290. MDIO Clause 22 Read Frame Format

Pre-amble	Start Delimiter	Operation Code	PHY Address	MMD Number	Turnaround	Data
FFFF FFFFh	01	10	AAAAA	RRRRR	Z0	DDDD.DDDD.DDDD.DDDD

Table 11-291. MDIO Clause 22 Write Frame Format

Pre-amble	Start Delimiter	Operation Code	PHY Address	MMD Number	Turnaround	Data
FFFF FFFFh	01	01	AAAAA	RRRRR	10	DDDD.DDDD.DDDD.DDDD

The default or idle state of the two wire serial interface is a logic one. All tri-state drivers should be disabled and the PHY's pull-up resistor should pull the **MDIO** line to a logic one. Prior to initiating any other transaction, the station management entity shall send a preamble sequence of 32 contiguous logic one bits on the **MDIO** line with 32 corresponding cycles on **MDCLK** to provide the PHY with a pattern that it can use to establish synchronization. A PHY shall observe a sequence of 32 contiguous logic one bits on **MDIO** with 32 corresponding **MDCLK** cycles before it responds to any other transaction.

Preamble

The start of a frame is indicated by a preamble, which consists of a sequence of 32 contiguous bits all of which are a "1". This sequence provides the PHY a pattern to use to establish synchronization.

Start Delimiter

The preamble is followed by the start delimiter which is indicated by a "01" pattern. The pattern assures transitions from the default logic one state to zero and back to one.

Operation Code

The operation code for a read is "10", while the operation code for a write is a "01".

PHY Address

Copyright © 2025 Texas Instruments Incorporated

The PHY address is 5 bits allowing 32 unique values. The first bit transmitted is the MSbit of the PHY address.

Register Address

The Register address is 5 bits allowing 32 registers to be addressed within each PHY. Refer to the 10/100 PHY address map for addresses of individual registers.

Turnaround

An idle bit time during which no device actively drives the MDIO signal shall be inserted between the register address field and the data field of a read frame in order to avoid contention. During a read frame, the PHY shall drive a zero bit onto MDIO for the first bit time following the idle bit and preceding the Data field. During a write frame, this field shall consist of a one bit followed by a zero bit.

Data

The Data field is 16-bits. The first bit transmitted and received is the MSbit of the data word.

Clause 45

Table 11-292 shows the address, Table 11-293 shows the read format and Table 11-294 shows the write format of the supported Clause 45 MII Management interface frames. Post-increment accesses are not supported.

Table 11-292. MDIO Clause 45 Address Frame Format

Pre-amble	Start Delimiter	Operation Code	PHY Address	MMD Number	Turnaround	Data
FFFF FFFFh	00	00	AAAAA	RRRRR	10	AAAA.AAAA.AAAA.AAAA

Table 11-293. MDIO Clause 45 Read Frame Format

Pre-amble	Start Delimiter	Operation Code	PHY Address	MMD Number	Turnaround	Data
FFFF FFFFh	00	11	AAAAA	RRRRR	Z0	DDDD.DDDD.DDDD.DDDD

Table 11-294. MDIO Clause 45 Write Frame Format

Pre-amble	Start Delimiter	Operation Code	PHY Address	MMD Number	Turnaround	Data
FFFF FFFFh	00	01	AAAAA	RRRRR	10	DDDD.DDDD.DDDD.DDDD

The default or idle state of the two wire serial interface is a logic one. All tri-state drivers should be disabled and the PHY's pull-up resistor should pull the **MDIO** line to a logic one. Prior to initiating any other transaction, the station management entity shall send a preamble sequence of 32 contiguous logic one bits on the **MDIO** line with 32 corresponding cycles on **MDCLK** to provide the PHY with a pattern that it can use to establish synchronization. A PHY shall observe a sequence of 32 contiguous logic one bits on **MDIO** with 32 corresponding **MDCLK** cycles before it responds to any other transaction. The **MDIO User_Addr** registers must be written before a read or write operation is performed to set the address used in the operation. Each read or write operation has a preceeding address frame.

Preamble

The start of a frame is indicated by a preamble, which consists of a sequence of 32 contiguous bits all of which are a "1". This sequence provides the PHY a pattern to use to establish synchronization. The preamble is required in clause 45 operation.

Start Delimiter

The preamble is followed by the start delimiter which is indicated by a "00" pattern.

Operation Code

The operation code for an address transaction is "00", The operation code for a read is "11", while the operation code for a write is a "01".

Copyright © 2025 Texas Instruments Incorporated

PHY Address

The PHY address is 5 bits allowing 32 unique values. The first bit transmitted is the MSbit of the PHY address.

MMD Number

The MMD number is the 5-bits allowing 32 unique values. The first bit transmitted is the MSbit.

Turnaround

An idle bit time during which no device actively drives the MDIO signal shall be inserted between the register address field and the data field of a read frame in order to avoid contention. During a read frame, the PHY shall drive a zero bit onto MDIO for the first bit time following the idle bit and preceding the Data field. During a write frame, this field shall consist of a one bit followed by a zero bit.

Address

The address field is 16-bits on address operations. The first bit transmitted is the MSbit of the address word. Each read/write operation initiated has an automatic address operation initiated first that uses the **MDIO User_Addr0/1** register values as the 16-bit address.

Data

The Data field is 16-bits on read and write operations. The first bit transmitted and received is the MSbit of the data word.

11.2.1.4.21.2 MDIO Functional Description

The MDIO Management I/F will remain idle until enabled by setting the **enable** bit in the **MDIO Control** register. The module will then continuously poll the linkstatus bits from within the GenericStatusRegister of all enabled 32 PHY addresses. Individual PHY's can be enabled or disabled for polling thru the associated bit in the **Poll_En** register. The **MDIO Link** and **MDIO alive** register bit values are updated on the poll of each PHY. In Normal Mode, The link status of two of the 32 possible PHY addresses can also be determined using the **MLINK** pin inputs. The **linksel** bit in the **MDIO USER_PHY_SEL** register determines the status input that is used. A change in the link status of the two PHYs being monitored will set the appropriate bit in the **MDIO LinkIntRaw** register and the **MDIO LinkIntMasked** register, if enabled by the **linkint_enable** bit in the **MDIO User_Phy_Sel** register. In State Change Mode, a change in any PHY status will be indicated on the **MDIO LINKINT[0]** interrupt if enabled.

The **MDIO Alive** register is updated if the PHY acknowledged the read of the generic status register. In addition, any PHY register read transactions initiated by the host also update the **MDIO Alive** register bit associated with the PHY.

At any time, the host can initiate a transaction for the MDO module to undertake using the **data, phyadr, regadd/MMD,** and **write** fields in an **MDIO User_Access** register. When the host sets the **go** bit in this register, the MDIO module will begin the transaction without any further intervention from the host. Upon completion, the MDIO will clear the **go** bit and set the **userintraw** bit in the **MDIO User_Int_Raw** register corresponding to the **MDIO User_Access** register being used. The corresponding bit in the **MDIO User_Int_Masked** register may also be set depending on the mask setting in the **MDIO User_Int_Mask_Set** and **MDIO User_Int_Mask_Clear** registers. A round-robin arbitration scheme is used to schedule transactions which may queued by the host in different **MDIO User_Access** registers. The host should check the status of the **go** bit in the **MDIO User_Access** register before initiating a new transaction to ensure that the previous transaction has completed. The host can use the **ack** bit in the **MDIO User_Access** register to determine the status of a read transaction.

Software may use the MDIO module to setup the auto-negotiation parameters of each PHY attached to a MAC port, retrieve the negotiation results, and setup the **MAC Control** register in the corresponding MAC.

11.2.1.4.22 Reset Isolation

The CPSW supports reset isolation of the Ethernet switch ports. When the **ISOLATE** input is asserted the below occur simultaneously:

Copyright © 2025 Texas Instruments Incorporated

- The Host Port 0 is removed from ALE processing (packets received on ports 1 through N-1 will be dropped to port 0).
- FHost packets are dropped. Any packet currently in progress when ISOLATE is asserted is dropped due to a FHost packet code error (and possible a CRC or FRAG error).
- THost packets in queue are dropped.

The intent of reset isolation is to allow packets to switch between the Ethernet ports while the remainder of the system is undergoing a reset. Isolation assumes that the external host and logic connected to the port 0 host interface is reset and will not be in the middle of a packet when **ISOLATE** is de-asserted.

11.2.1.4.23 CPSW Initialization and Configuration

To configure the CPSW for operation the host must perform the following:

- Ensure that at least 2000 VBUSP_CLK periods are run after reset is de-asserted.
- Configure the CPSW Control register.
- Configure the Ethernet Port Source Address registers
- Configure the Statistics Port Enable registers
- Configure the ALE.
- Configure the Ethernet Ports.

11.2.1.4.24 Enet Mac Reset or GMII Mode Change Configuration

- Set pn_cmd_idle in the Ethernet port Pn_Mac_Control registers.
- Wait for pn_Idle to be indicated in the Ethernet port Pn_Mac_Status registers.
- Set pn_soft_reset in the Ethernet port Pn_Soft_Reset registers.
- Wait for pn_soft_reset in the Pn_Soft_Reset registers to be cleared to confirm reset completion.
- Configure the Ethernet ports.

11.2.1.4.25 Memory Error Detection and Correction

The cpsw error detection and correction logic uses the IP ECC Aggregator Module. The ECC Aggregator allows the control of the cpsw RAMs as shown in the below table. ECC is always enabled. The cpsw FIFO RAMS implement ECC only on packet headers. The packet data is protected by Castignoli CRC (regardless of the input packet CRC type or output CRC type). The ALE and EST RAMs have complete ECC as normal.

11.2.1.4.25.1 Packet Header ECC

Only packet headers bits are protected by ECC in the cpsw RAMs. The **ECC_Error_Control1** register **ecc_row** is not implemented – **ecc_bit1** is implemented to determine which bit of the header is flipped for an SEC error when the **ecc_crc_mode** bit is cleared in the **CPSW_Control** register. The ECC status registers return the RAM address that was flipped (**ecc_row**) along with the **ecc_bit1** value. Forcing double bit errors in testing can cause indeterminate switch operation if multiple used packet header bits are flipped given that only single bit errors are fixed by the ECC logic. Header bits 207 downto 200 are not currently used in the switch and may be used to test double bit errors without the possibility of requiring a reset for the switch to recover from the double bit error. No header bits are flipped when **ecc_crc_mode** is set to one. Either the **pn_rx_ecc_err_en** or the **pn_tx_ecc_err_en** bit must be set in the **PN_Control** register to test ecc header errors.

The header ECC code is stored in bits 255 downto 208. If any bit is flipped in the ECC code, the flipped bit will be corrected, but the index of the flipped bit will be reported as bit zero. This implies that when the aggregator reports that there is a SEC on 'bit 0', it can mean two things: either SEC on data bit 0 or SEC somewhere inside the ECC code. Any packet header with ECC error issues a pulse on **ECC_PULSE_INTR** as does an ale ram ECC error.

11.2.1.4.25.2 Packet Protect CRC

Each ingress packet without error is passed through the cpsw with an internally generated Castignoli protect CRC. The protect CRC is checked on port egress for correctness and is replaced. If the CRC is correct (no RAM bit errors), then the packet is output with the selected port CRC type. If a protect CRC error is detected on THost then the **memory_protect_error** buffer descriptor bit will be asserted so that the packet is dropped to the host. If a protect CRC error is detected on Ethernet egress then the egress CRC will be generated

Copyright © 2025 Texas Instruments Incorporated

on the packet and at least one byte of the CRC will be inverted on output. CRC memory protect errors do not assert the **ECC_PULSE_INTR** signal. CRC memory protect errors are counted in the associated port statistics registers and issue an interrupt on **STAT_PEND_INTR** if any CRC memory protect error occurs (and the statistics for that port are enabled). When the **ecc_crc_mode** bit in the **CPSW_Control** register is set, the **ecc_bit1** aggregator register will flip the associated column bit in any FIFO memory read operation, inducing a CRC protect error when the protect CRC is checked. No header bits are flipped when **ecc_crc_mode** is set. Either the **pn_rx_ecc_err_en** or the **pn_tx_ecc_err_en** bit must be set in the **PN_Control** register to test packet CRC errors.

RAM 0	ALE Ram
RAM 1	Port 0 FIFO Rx Ram
RAM 2	Port 0 FIFO Tx Ram
RAM 3	Port 1 FIFO Rx Ram
RAM 4	Port 1 FIFO Tx Ram
RAM 5	Port 2 FIFO Rx Ram
RAM 6	Port 2 FIFO Tx Ram
…	…
RAM (N*2) - 1	Port N FIFO Rx Ram
RAM (N*2)	Port N FIFO Tx Ram
RAM 19	EST Ram

11.2.1.4.25.3 Aggregator Ram Control

The ECC logic for each FIFO ram (receive and transmit) is divided into eight separate ECC encoders/decoders that encode/decode 26-bits of data each. Each of the 8 encoders (0 to 7) generates 6-bits of ECC code (48 code bits total), and each of the eight decoders (0 to 7) checks 6-bits of ECC code across the 26-bits of data (208 data bits total). The 48-bits of ECC code are passed through the ram in the upper 48 unused bits in the header word. The header data bits and ECC code bits are shown in the below table. The **ecc_bit1[15:0]** value returned on error is a 16-bit value that is the concatenation of 5-bits of zero, 3-bits of the encoder/decoder number (0 to 7), 3-bits of zero, and 5-bits of index into the indicated 26-bit encoder/decoder. For example, an **ecc_bit1** value of 0x0308 is bit-8 of encoder/decoder 3, which is header bit 86 (((26*3) + 8).

Header Data Bits	Encoder/Decoder
25:0	Encoder/Decoder 0 Data
51:26	Encoder/Decoder 1 Data
77:52	Encoder/Decoder 2 Data
103:78	Encoder/Decoder 3 Data
129:104	Encoder/Decoder 4 Data
155:130	Encoder/Decoder 5 Data
181:156	Encoder/Decoder 6 Data
207:182	Encoder/Decoder 7 Data
213:208	Encoder/Decoder 0 Code
219:214	Encoder/Decoder 1 Code
225:220	Encoder/Decoder 2 Code
231:226	Encoder/Decoder 3 Code
237:232	Encoder/Decoder 4 Code
243:238	Encoder/Decoder 5 Code
249:244	Encoder/Decoder 6 Code
255:250	Encoder/Decoder 7 Code

Copyright © 2025 Texas Instruments Incorporated

11.2.1.4.26 CPSW Network Statistics

The CPSW has statistics that record events associated with frame traffic on each port. STAT0 keeps statistics for PORT0, STAT1 for PORT1 and so on. All statistics are 32-bit registers. By convention the statistics registers are receive for ingress and transmit for egress for all ports.

If any bit in **stat_port_en** is set for a specific STAT module, the value written to a statistics register will be subtracted from the register value with the result being stored in the register. If a value greater than the statistics value is written, then zero will be written to the register (writing 0xffffffff will clear a statistics location). When all port enable bits are cleared to zero, all statistics registers are read/write (normal write direct, so writing 0x00000000 will clear a statistics location). All write accesses must be 32-bit accesses. In the below statistics descriptions, “the port” refers to any enabled port (with a corresponding set **stat_port_en** bit).

11.2.1.4.26.1 Rx (only) Statistics Descriptions

11.2.1.4.26.1.1 Good Rx Frames

The total number of good frames received on the port. A good frame is defined to be:

- any data or MAC control frame which matched a unicast, broadcast or multicast address, or matched due to promiscuous mode, and
- was of length 64 to pn_rx_maxlen bytes inclusive, and
- had no CRC error, alignment error or code error.

See the **Rx Align/Code Errors** and **Rx CRC errors** statistic descriptions for definitions of alignment, code and CRC errors. Overruns have no effect upon this statistic.

11.2.1.4.26.1.2 Broadcast Rx Frames

The total number of good broadcast frames received on the port. A good broadcast frame is defined to be:

- any data or MAC control frame which was destined for address 0xFFFFFFFFFFFF only, and
- was of length 64 to pn_rx_maxlen bytes inclusive, and
- had no CRC error, alignment error or code error.

See the **Rx Align/Code Errors** and **Rx CRC errors** statistic descriptions for definitions of alignment, code and CRC errors. Overruns have no effect upon this statistic.

11.2.1.4.26.1.3 Multicast Rx Frames

The total number of good multicast frames received on the port. A good multicast frame is defined to be:

- any data or MAC control frame which was destined for any multicast address other than 0xFFFFFFFFFFFF, and
- was of length 64 to pn_rx_maxlen bytes inclusive, and
- had no CRC error, alignment error or code error.

See the **Rx Align/Code Errors** and **Rx CRC errors** statistic descriptions for definitions of alignment, code and CRC errors. Overruns have no effect upon this statistic.

11.2.1.4.26.1.4 Pause Rx Frames

The total number of IEEE 802.3X pause frames received by the port (whether acted upon or not). Such a frame:

- contained any unicast, broadcast, or multicast address, and
- contained the length/type field value 88.08 (hex) and the opcode 0x0001, and
- was of length 64 to pn_rx_maxlen bytes inclusive, and
- had no CRC error, alignment error or code error, and
- pause frames are enabled on the port (pn_tx_flow_en = 1).

The port could have been in either half or full-duplex mode.

See the **Rx Align/Code Errors** and **Rx CRC errors** statistic descriptions for definitions of alignment, code and CRC errors. Overruns have no effect upon this statistic

or

Copyright © 2025 Texas Instruments Incorporated

The total number of priority based flow control (802.1Qbb) pause frames received by the port (whether acted upon or not). Such a frame:

- contained any unicast, broadcast, or multicast address, and
- contained the length/type field value 88.08 (hex) and the opcode 0x0001, and
- was of length 64 to pn_rx_maxlen bytes inclusive, and
- had no CRC error, and
- priority based flow control pause frames are enabled on the port.

See the **Rx CRC errors** statistic descriptions for definitions of CRC errors. Overruns have no effect upon this statistic

11.2.1.4.26.1.5 Rx CRC Errors

The total number of frames received on the port that experienced a CRC error. Such a frame:

- was any data or MAC control frame which matched a unicast, broadcast or multicast address, or matched due to promiscuous mode, and
- was of length 64 to pn_rx_maxlen bytes inclusive, and
- had no code/align error, and
- had a CRC error.

Overruns have no effect upon this statistic.

A CRC error is defined to be:

- a frame containing an even number of nibbles, and
- fails the Frame Check Sequence test.

11.2.1.4.26.1.6 Rx Align/Code Errors

The total number of frames received (ingress) on the port that experienced an alignment error or code error. Such a frame:

- was any data or MAC control frame which matched a unicast, broadcast or multicast address, or matched due to promiscuous mode, and
- was of length 64 to pn_rx_maxlen bytes inclusive, and
- had either an alignment error or a code error.

Over-runs have no effect upon this statistic.

An alignment error is defined to be:

- a frame containing an odd number of nibbles, and
- also fails the Frame Check Sequence test if the final nibble is ignored.

A code error is defined to be:

- A frame which has been discarded because the port's **MRXER** pindriven with a one for at least one bit-time's duration at any point during the frame's reception.

Note

RFC 1757 etherStatsCRCAlignErrors Ref. 1.5 can be calculated by summing **Rx Align/Code Errors** and **Rx CRC errors** (see below).

10G: For XGMII, packets are ended at the code error and only that number of bytes are kept when rx_cef is set (includes the code error bytes).

11.2.1.4.26.1.7 Oversize Rx Frames

The total number of oversized frames received on the port. An oversized frame is defined to be:

- was any data or MAC control frame which matched a unicast, broadcast or multicast address, or matched due to promiscuous mode, and
- was greater than pn_rx_maxlen in bytes, and

Copyright © 2025 Texas Instruments Incorporated

- had no CRC error, alignment error or code error.

See the **Rx Align/Code Errors** and **Rx CRC errors** statistic descriptions for definitions of alignment, code and CRC errors. Overruns have no effect upon this statistic.

11.2.1.4.26.1.8 Rx Jabbers

The total number of jabber frames received on the port. A jabber frame is:

- was any data or MAC control frame which matched a unicast, broadcast or multicast address, or matched due to promiscuous mode, and
- was greater than pn_rx_maxlen bytes long, and
- had a CRC error, an alignment error, or a code error.

See the **Rx Align/Code Errors** and **Rx CRC errors** statistic descriptions for definitions of alignment, code and CRC errors. Overruns have no effect upon this statistic.

11.2.1.4.26.1.9 Undersize (Short) Rx Frames

The total number of undersized frames received on the port. An undersized frame is defined to be:

- any data frame which matched a unicast, broadcast or multicast address, or matched due to promiscuous mode, and
- was less than 64 bytes long, and
- had no CRC error, alignment error or code error.

See the **Rx Align/Code Errors** and **Rx CRC errors** statistic descriptions for definitions of alignment, code and CRC errors. Overruns have no effect upon this statistic.

11.2.1.4.26.1.10 Rx Fragments

The total number of frame fragments received on the port. A frame fragment is defined to be:

- any data frame (address matching does not matter), and
- was less than 64 bytes long, and
- had a CRC error, an alignment error, or a code error, and
- was not the result of a collision caused by half duplex, collision based flow control.

See the **Rx Align/Code Errors** and **Rx CRC errors** statistic descriptions for definitions of alignment, code and CRC errors. Overruns have no effect upon this statistic.

11.2.1.4.26.1.11 Rx IPG Error

The total number of 10G frames received on a port that had a correct preamble but did not have at least five bytes of IDLE preceding the frame. This does not indicate if the frame with the IPG error was kept or ignored.

11.2.1.4.26.1.12 Rx Bottom Of FIFO Drop

Ethernet Ports

The total number of ingress frames on a port that overran the port's receive FIFO and were dropped (bottom of receive FIFO). Port 0 (CPPI transmit port) should not drop packets on ingress because port 0 ingress flow control should be enabled. The Ethernet ports will only drop packets in the receive FIFO when receive flow control is enabled and the sending port ignores sent pause frame and then overruns the receive FIFO. The overrun frame is defined to be:

- any data or MAC control frame which matched a unicast, broadcast or multicast address, or matched due to promiscuous mode, and
- was any length (including <64 bytes and > pn_rx_maxlen bytes), and
- Was dropped on port 0 due to a lack of memory space in the receive FIFO

Note

This stat should be zero

Host Port 0

Copyright © 2025 Texas Instruments Incorporated

This statistic also counts frames dropped on port 0 that were 17 to 33 bytes (only for port 0). For Ethernet ports, the drop count for frames shorter than 33 bytes is included in the undersized or fragment count. Port 0 simply gives an indication that a packet with 33 bytes was dropped. No other statistics are counted for frames shorter than 33 bytes.

11.2.1.4.26.1.13 Portmask Drop

All Ports

The total number of ingress frames on a port that were dropped by the ALE (the ALE did not forward the packet to any port). The frame was defined to be:

- any data or MAC control frame
- Was any length greater than 32 bytes
- Was dropped by the ALE - ale_portmask = 0 (was not sent to any destination port)
- The frame could have been dropped due to error or other counted reason, so it could be counted elsewhere also.

Note

This stat does not count in the overall total as it includes every packet received greater than 32 bytes that had a zero **port_mask**.

11.2.1.4.26.1.14 Rx Top Of FIFO Drop

All Ports

The total number of frames received on a port that had a **START** of frame (SOF) overrun on any destination port egress (when attempting to load the packet from the top of the ingress port receive FIFO into any other port's transmit FIFO). If a multicast/broadcast packet is dropped by multiple destination ports then this statistic will increment by the number of ports that dropped the packet. Rx Top Of FIFO Drop is defined to be:

- was any data or MAC control frame which matched a unicast, broadcast or multicast address, or matched due to promiscuous mode
- was any length (including <64 bytes and >**pn_rx_maxlen** bytes)
- had no CRC error, alignment error or code error
- had a SOF of frame overrun on another port egress

11.2.1.4.26.1.15 ALE Drop

All Ports

The total number of frames received on a port such that the destination address was not equal to the source address and the packet was not destined to the port it was received on, but the frame was not forwarded to any port (the **port_mask** was zero).

- was any data or MAC control frame which matched a unicast, broadcast or multicast address, or matched due to promiscuous mode, and
- was any length (including <64 bytes and > pn_rx_maxlen bytes), and
- had no CRC error, alignment error or code error, and
- the destination address was not equal to the source address, and
- The packet was not destined for the port it was receive on, and
- had a zero port_mask

11.2.1.4.26.1.16 ALE Overrun Drop

All Ports

The total number of frames received on a port that were dropped (zero **port_mask**) due to exceeding the maximum ALE lookup rate (Port 0 should not have ALE Overrun Drops because the ingress rate is controlled to prevent it). This statistic should be zero and when non-zero indicates a system clock issue or indicates that short packets were sent with **pn_rx_csf_en** at a rate that exceeded the maximum lookup rate.

Copyright © 2025 Texas Instruments Incorporated

- was any data or MAC control frame which matched a unicast, broadcast or multicast address, or matched due to promiscuous mode, and
- was any length (including <64 bytes and > pn_rx_maxlen bytes), and
- the maximum ALE lookup rate was exceeded so the lookup was aborted and the packet was dropped.

11.2.1.4.26.1.17 ALE Rate Limit Drop

All Ports

The total number of frames received on a port that were dropped (zero **port_mask**) due to receive rate limiting on this port or due to transmit rate limiting on any destination port (not sent to all expected destination ports if transmit rate limiting).

- was any data or MAC control frame which matched a unicast, broadcast or multicast address, or matched due to promiscuous mode, and
- was any length (including <64 bytes and > pn_rx_maxlen bytes), and
- had no CRC error, alignment error or code error, and
- the receive rate was exceeded and the packet was dropped, or the transmit rate was exceeded to any destination port and the packet was dropped to one or more expected destination ports (indicates that the destinations were pruned due to rate limiting).

11.2.1.4.26.1.18 ALE VLAN Ingress Check Drop

The total number of frames received on a port that were dropped (zero **port_mask**) due to VLAN ingress check failure.

- was any data or MAC control frame which matched a unicast, broadcast or multicast address, or matched due to promiscuous mode, and
- was any length (including <64 bytes and > pn_rx_maxlen bytes), and
- had no CRC error, alignment error or code error, and
- the VLAN ID ingress check failed (the receive port was not in the group), and
- The address lookup did not return a match with the super bit set

11.2.1.4.26.1.19 ALE DA=SA Drop

The total number of frames received on a port that were dropped (zero **port_mask**) due to destination address equal to source address.

- was any data or MAC control frame which matched a unicast, broadcast or multicast address, or matched due to promiscuous mode, and
- was any length (including <64 bytes and > pn_rx_maxlen bytes), and
- had no CRC error, alignment error or code error, and
- The destination address was equal to the source address
- The source address was not an entry in the table.

11.2.1.4.26.1.20 Block Address Drop

The total number of frames received on a port that were dropped (zero **port_mask**) due to the destination or source address being blocked.

- was any data or MAC control frame which matched a unicast, broadcast or multicast address, or matched due to promiscuous mode, and
- was any length (including <64 bytes and > pn_rx_maxlen bytes), and
- had no CRC error, alignment error or code error, and
- the source or destination address matched a table entry with the block bit set.

11.2.1.4.26.1.21 ALE Secure Drop

The total number of frames received on a port that were dropped (zero **port_mask**) due to a secure violation (the source address is owned by a different receive port).

- was any data or MAC control frame which matched a unicast, broadcast or multicast address, or matched due to promiscuous mode, and

Copyright © 2025 Texas Instruments Incorporated

- was any length (including <64 bytes and > pn_rx_maxlen bytes), and
- had no CRC error, alignment error or code error, and
- the source address is an entry in the table with the secure bit set and a port number for a different receive port.

11.2.1.4.26.1.22 ALE Authentication Drop

The total number of frames received on a port that were dropped (zero **port_mask**) due to authentication failure.

- was any data or MAC control frame which matched a unicast, broadcast or multicast address, or matched due to promiscuous mode, and
- was any length (including <64 bytes and > pn_rx_maxlen bytes), and
- had no CRC error, alignment error or code error, and
- enable_auth_mode is set, and
- the source address is not equal to the destination address, and
- the source address is not a table entry, and
- the destination address is not a table entry with the super bit set.

11.2.1.4.26.1.23 ALE Unknown Unicast

The total number of frames received on a port that had a unicast destination address with an unknown source address. The frame is defined to be:

- was any data frame with a unicast destination address, and
- the source address was not a table entry, and
- was of length 64 to pn_rx_maxlen bytes inclusive, and
- had no CRC error, alignment error or code error.

Note

The ALE Unknown Unicast Bytecount statististic is the number of bytes contained in the ALE Unknown Unicast frames.

11.2.1.4.26.1.24 ALE Unknown Multicast

The total number of frames received on a port that had a multicast destination address with an unknown source address. The frame is defined to be:

- was any data frame with a multicast destination address, and
- the source address was not a table entry, and
- was of length 64 to pn_rx_maxlen bytes inclusive, and
- had no CRC error, alignment error or code error.

Note

The ALE Unknown Multicast Bytecount statististic is the number of bytes contained in the ALE Unknown Multicast frames.

11.2.1.4.26.1.25 ALE Unknown Broadcast

The total number of frames received on a port that had a Broadcast destination address with an unknown source address. The frame is defined to be:

- was any data frame with a broadcast destination address, and
- the source address was not a table entry, and
- was of length 64 to pn_rx_maxlen bytes inclusive, and
- had no CRC error, alignment error or code error.

Note

The ALE Unknown Broadcast Bytecount statististic is the number of bytes contained in the ALE Unknown Broadcast frames.

Copyright © 2025 Texas Instruments Incorporated

11.2.1.4.26.1.26 ALE Policer Match

The total number of frames received on a port that had a matched a policer. The frame is defined to be:

- any data frame, and
- matched a condition on a policer, and
- was of length 64 to pn_rx_maxlen bytes inclusive, and
- had no CRC error, alignment error or code error.

11.2.1.4.26.1.27 ALE Policer Match Red

The total number of frames received on a port that had matched a policer and the condition was red. The frame is defined to be:

- any data frame, and
- matched a policer with the condition red, and
- was of length 64 to pn_rx_maxlen bytes inclusive, and
- had no CRC error, alignment error or code error.

11.2.1.4.26.1.28 ALE Policer Match Yellow

The total number of frames received on a port that had matched a policer and the condition was yellow. The frame is defined to be:

- any data frame, and
- matched a policer with the condition yellow, and
- was of length 64 to pn_rx_maxlen bytes inclusive, and
- had no CRC error, alignment error or code error.

11.2.1.4.26.1.29 Rx Octets

The total number of bytes in all good frames received on the port. A good frame is defined to be:

- any data or MAC control frame which matched a unicast, broadcast or multicast address, or matched due to promiscuous mode, and
- was of length 64 to pn_rx_maxlen bytes inclusive, and
- had no CRC error, alignment error or code error.

See the **Rx Align/Code Errors** and **Rx CRC errors** statistic descriptions for definitions of alignment, code and CRC errors. Overruns have no effect upon this statistic.

11.2.1.4.26.2 Tx (only) Statistics Descriptions

The maximum and minimum transmit frame size is software controllable.

Thost overruns (**P0_Tx_SOF_OVERRUN** and **P0_Tx_MOF_OVERRUN**) have no effect on Tx statistics. They are counted separately.

11.2.1.4.26.2.1 Good Tx Frames

The total number of good frames transmitted on the port. A good frame is defined to be:

- any data or MAC control frame which was destined for any unicast, broadcast or multicast address, and
- was any length, and
- had no late or excessive collisions, no carrier loss and no underrun.

11.2.1.4.26.2.2 Broadcast Tx Frames

The total number of good broadcast frames transmitted on the port. A good broadcast frame is defined to be:

- any data or MAC control frame destined for address 0xFFFFFFFFFFFF only, and
- was of any length, and
- had no late or excessive collisions, no carrier loss and no underrun

11.2.1.4.26.2.3 Multicast Tx Frames

The total number of good multicast frames transmitted on the port. A good multicast frame is defined to be:

- any data or MAC control frame destined for any multicast address other than 0xFFFFFFFFFFFF, and

Copyright © 2025 Texas Instruments Incorporated

- was of any length, and
- had no late or excessive collisions, no carrier loss and no underrun.

11.2.1.4.26.2.4 Pause Tx Frames

This statistic indicates the number of IEEE 802.3X pause frames transmitted by the port.

Pause frames cannot contain a CRC error because they are created in the transmitting MAC, so these error conditions have no effect upon the statistic. Pause frames sent by software will not be included in this count.

Since pause frames are only transmitted in full duplex carrier loss and collisions have no effect upon this statistic.

Transmitted pause frames are always 64 byte multicast frames so will appear in the **Tx Multicast Frames** and **64octect Frames** statistics.

11.2.1.4.26.2.5 Collisions

This statistic records the total number of times that the port experienced a collision. Collisions occur under two circumstances.

1. When a transmit data or MAC control frame:
   - was destined for any unicast, broadcast or multicast address, and
   - was any size, and
   - had no carrier loss and no underrun, and
   - experienced a collision. A jam sequence is sent for every non-late collision, so this statistic will increment on each occasion if a frame experiences multiple collisions (and increments on late collisions).

   CRC errors have no effect upon this statistic.
2. When the port is in half-duplex mode, flow control is active, and a frame reception begins.

11.2.1.4.26.2.6 Single Collision Tx Frames

The total number of frames transmitted on the port that experienced exactly one collision. Such a frame:

- was any data or MAC control frame destined for any unicast, broadcast or multicast address, and
- was any size, and
- had no carrier loss and no underrun, and
- experienced one collision before successful transmission. The collision was not late.

CRC errors have no effect upon this statistic.

11.2.1.4.26.2.7 Multiple Collision Tx Frames

The total number of frames transmitted on the port that experienced multiple collisions. Such a frame:

- was any data or MAC control frame destined for any unicast, broadcast or multicast address, and
- was any size, and
- had no carrier loss and no underrun, and
- experienced 2 to 15 collisions before being successfully transmitted. None of the collisions were late.

CRC errors have no effect upon this statistic.

11.2.1.4.26.2.8 Excessive Collisions

The total number of frames for which transmission was abandoned due to excessive collisions. Such a frame:

- was any data or MAC control frame destined for any unicast, broadcast or multicast address, and
- was any size, and
- had no carrier loss and no underrun, and
- experienced 16 collisions before abandoning all attempts at transmitting the frame. None of the collisions were late.

CRC errors have no effect upon this statistic.

Copyright © 2025 Texas Instruments Incorporated

11.2.1.4.26.2.9 Late Collisions

The total number of frames on the port for which transmission was abandoned because they experienced a late collision. Such a frame:

- was any data or MAC control frame destined for any unicast, broadcast or multicast address, and
- was any size, and
- experienced a collision later than 512 bit-times into the transmission. There may have been up to 15 previous (non-late) collisions which had previously required the transmission to be re-attempted. The Late Collisions statistic dominates over the single, multiple and excessive Collisions statistics - if a late collision occurs the frame will not be counted in any of these other three statistics.

CRC errors, carrier loss, and underrun have no effect upon this statistic.

11.2.1.4.26.2.10 Deferred Tx Frames

The total number of frames transmitted on the port that first experienced deferment. Such a frame:

- was any data or MAC control frame destined for any unicast, broadcast or multicast address, and
- was any size, and
- had no carrier loss and no underrun, and
- experienced no collisions before being successfully transmitted
- found the medium busy when transmission was first attempted, so had to wait.

CRC errors have no effect upon this statistic

11.2.1.4.26.2.11 Carrier Sense Errors

The total number of frames on the port that experienced carrier loss. Such a frame:

- was any data or MAC control frame destined for any unicast, broadcast or multicast address, and
- was any size, and
- the carrier sense condition was lost or never asserted when transmitting the frame (the frame is not retransmitted). This is a transmit only statistic. Carrier Sense is a don't care for received frames. Transmit frames with carrier sense errors are sent until completion and are not aborted.
- CRC errors and underrun have no effect upon this statistic.

11.2.1.4.26.2.12 Tx Octets

The total number of bytes in all good frames transmitted on the port. A good frame is defined to be:

- any data or MAC control frame which was destined for any unicast, broadcast or multicast address, and
- was any size, and
- had no late or excessive collisions and no carrier loss.

11.2.1.4.26.2.13 Transmit Priority 0-7

The total number of frames transmitted on the port from transmit FIFO priority 0-7. Collision retries do not affect this statistic. Pause frames do not affect this statistic.

- any frame transmitted from priority 0-7, and
- was less than or equal to cpsw_tx_pri(0-7)_maxlen.
- Collision retries are not counted in this statistic
- Pause frames are not counted in this statistic.
- Carrier sense errors do not affect this statistic.

Note

The Transmit Priority 0-7 Bytecount statististic is the number of bytes contained in the frames of the Transmit Priority 0-7 statistic.

Copyright © 2025 Texas Instruments Incorporated

11.2.1.4.26.2.14 Transmit Priority 0-7 Drop

The total number of transmit frames on the port that overran the transmit FIFO priority 0-7 and were dropped. This count includes frames dropped due to **cpsw_tx_pri(0-7)_maxlen**.

- any frame destined to be transmitted from priority 0-7, and
- was any size, and
- was dropped due to priority 0-7 FIFO overrun (Start of packet overrun).
- Was dropped due to frame size larger than cpsw_tx_pri(0-7)_maxlen.

Note

The Transmit Priority 0-7 Drop Bytecount statististic is the number of bytes contained in the frames of the Transmit Priority 0-7 Drop statistic.

11.2.1.4.26.2.15 Transmit Memory Protect Errors

The total number of transmit frames on the port that had a memory protect CRC error on egress.

- any frame destined to be transmitted, and
- was any size, and
- Had a memory protect CRC error on egress.

Frames to the host with memory protect errors are indicated to be dropped with a set receive buffer descriptor **drop** bit. Ethernet frames will have at least one byte of the generated port type CRC inverted on egress.

This statistic is 8-bits wide only and will not rollover but will limit at 0xff.

A non-zero value in this statistic will issue a **STAT_PEND_INTR** interrupt for the associated port.

11.2.1.4.26.3 Rx and Tx (shared) Statistics Descriptions

11.2.1.4.26.3.1 Net Octets

The total number of bytes of frame data received and transmitted on the port. Each frame counted:

- was any data or MAC control frame destined for any unicast, broadcast or multicast address (address match does not matter), and
- was of any size (including <64 byte and > pn_rx_maxlen byte frames).

Also counted in this statistic are:

- every byte transmitted before a carrier-loss was experienced,
- every byte transmitted before each collision was experienced, (i.e. multiple retries are counted each time),
- every byte received if the port is in half-duplex mode until a jam sequence was transmitted to initiate flow control. (The jam sequence was not counted to prevent double-counting).

Error conditions such as alignment errors, CRC errors, code errors, overruns and underruns do not affect the recording of bytes by this statistic.

The objective of this statistic is to give a reasonable indication of Ethernet utilization.

11.2.1.4.26.3.2 Rx + Tx 64 Octet Frames

The total number of 64-byte frames received and transmitted on the port. Such a frame is defined to be:

- any data or MAC control frame which was destined for any unicast, broadcast or multicast address, and
- did not experience late collisions, excessive collisions, or carrier sense error, and
- was exactly 64 bytes long. (If the frame was being transmitted and experienced carrier loss that resulted in a frame of this size being transmitted, then the frame will be recorded in this statistic).

CRC errors, code/align errors and overruns do not affect the recording of frames in this statistic.

Copyright © 2025 Texas Instruments Incorporated

11.2.1.4.26.3.3 Rx + Tx 65-127 Octet Frames

The total number of frames of size 65 to 127 bytes received and transmitted on the port. Such a frame is defined to be:

- any data or MAC control frame which was destined for any unicast, broadcast or multicast address, and
- did not experience late collisions, excessive collisions, or carrier sense error, and
- was 65 to 127 bytes long.

CRC errors, code/align errors, underruns and overruns do not affect the recording of frames in this statistic.

11.2.1.4.26.3.4 Rx + Tx 128-255 Octet Frames

The total number of frames of size 128 to 255 bytes received and transmitted on the port. Such a frame is defined to be:

- any data or MAC control frame which was destined for any unicast, broadcast or multicast address, and
- did not experience late collisions, excessive collisions, or carrier sense error, and
- was 128 to 255 bytes long.

CRC errors, code/align errors, underruns and overruns do not affect the recording of frames in this statistic.

11.2.1.4.26.3.5 Rx + Tx 256-511 Octet Frames

The total number of frames of size 256 to 511 bytes received and transmitted on the port. Such a frame is defined to be:

- any data or MAC control frame which was destined for any unicast, broadcast or multicast address, and
- did not experience late collisions, excessive collisions, or carrier sense error, and
- was 256 to 511 bytes long.

CRC errors, code/align errors, underruns and overruns do not affect the recording of frames in this statistic.Rx + Tx 512-1023 Octet Frames

The total number of frames of size 512 to 1023 bytes received and transmitted on the port. Such a frame is defined to be:

- any data or MAC control frame which was destined for any unicast, broadcast or multicast address, and
- did not experience late collisions, excessive collisions, or carrier sense error, and
- was 512 to 1023 bytes long.

CRC errors, code/align errors and overruns do not affect the recording of frames in this statistic.

11.2.1.4.26.3.6 Rx + Tx 1024_Up Octet Frames

The total number of frames of size 1024 to **pn_rx_maxlen** bytes for receive or 1024 up for transmit on the port. Such a frame is defined to be:

- any data or MAC control frame which was destined for any unicast, broadcast or multicast address, and
- did not experience late collisions, excessive collisions, or carrier sense error, and
- was 1024 to pn_rx_maxlen bytes long on receive, or any size on transmit.

CRC errors, code/align errors, underruns and overruns do not affect the recording of frames in this statistic.

Table 11-295. Rx Statistics Summary

Rx Statistic	Frame/ Oct	Rx/ Rx+ Tx	Frame Type					Frame Size (bytes)								Event				
			MAC control		Data			< 64	64	65-127	128-255	256-511	512-1023	1024-rx_maxlen	> rx_maxlen	flow coll.	CRC error	align / code	over-run	addr disc.
			Pausefrane	Non-pause	Multicast	Broadcast	Unicast													
Good Rx Frames	F	Rx	(y|	y|	y|	y|	y)	n	(y|	y|	y|	y|	y|	y)	n	-	n	n	-	n

Copyright © 2025 Texas Instruments Incorporated

Table 11-295. Rx Statistics Summary (continued)

Broadcast Rx Frames	F	Rx	(%|	%|	n	y)	n	n	(y|	y|	y|	y|	y|	y)	n	-	n	n	-	n
Multicast Rx Frames	F	Rx	(%|	%|	y)	n	n	n	(y|	y|	y|	y|	y|	y)	n	-	n	n	-	n
Pause Rx Frames	F	Rx	y	n	n	n	n	n	(y|	y|	y|	y|	y|	y)	n	-	n	n	-	-
Rx CRC Errors	F	Rx	(y|	y|	y|	y|	y)	n	(y|	y|	y|	y|	y|	y)	n	-	y	n	-	n
Rx Align/ Code Errors	F	Rx	(y|	y|	y|	y|	y)	n	(y|	y|	y|	y|	y|	y)	n	-	-	y	-	n
Oversized Rx Frames	F	Rx	(y|	y|	y|	y|	y)	n	n	n	n	n	n	n	y	-	n	n	-	n
Rx Jabbers	F	Rx	(y|	y|	y|	y|	y)	n	n	n	n	n	n	n	y	-	(y|	y)	-	n
Undersized Rx Frames	F	Rx	n	n	(y|	y|	y)	y	n	n	n	n	n	n	n	-	n	n	-	n
Rx Fragments	F	Rx	n	n	(y|	y|	y)	y^	n	n	n	n	n	n	n	-	(y|	y)	-	-
Rx Overruns	F	Rx	(y|	y|	y|	y|	y)	(y|	y|	y|	y|	y|	y|	y|	y)	-	-	-	y	n
64octet Frames	F	Rx+ Tx	(y|	y|	y|	y|	y)	n	y	n	n	n	n	n	n	-	-	-	-	n
65-127octect Frames	F	Rx+ Tx	(y|	y|	y|	y|	y)	n	n	y	n	n	n	n	n	-	-	-	-	n

Copyright © 2025 Texas Instruments Incorporated

Table 11-295. Rx Statistics Summary (continued)

128-255octect Frames	F	Rx+Tx	(y|	y|	y|	y|	y)	n	n	n	y	n	n	n	n	-	-	-	-	n
256-511octect Frames	F	Rx+Tx	(y|	y|	y|	y|	y)	n	n	n	n	y	n	n	n	-	-	-	-	n
512-1023octect Frames	F	Rx+Tx	(y|	y|	y|	y|	y)	n	n	n	n	n	y	n	n	-	-	-	-	n
1024-UPoctect Frames	F	Rx+Tx	(y|	y|	y|	y|	y)	n	n	n	n	n	n	y	n	-	-	-	-	n
Rx Octets	O	Rx	(y|	y|	y|	y|	y)	n	(y|	y|	y|	y|	y|	y)	n	-	n	n	-	n
Net Octets	O	Rx+Tx	(y|	y|	y|	y|	y)	(y|	y|	y|	y|	y|	y|	y|	y|	y)	-	-	-	-

1. “AND” is assumed horizontally across the table between all conditions which form the statistic (marked y or n) except where (y|y), meaning “OR” is indicated. Parentheses are significant.
2. “-“ indicates conditions which are ignored in the formations of the statistic.
3. Statistics marked “Rx+Tx” are formed by summing the Rx and Tx statistics, each of which is formed independently.
4. The non-pause column refers to all MAC control frames (i.e. frames with length/type=88.08) with opcodes other than 0x0001. The pauseframe column refers to MAC frames with the opcode=0x0001.
5. The multicast, broadcast and unicast columns in the table refer to non-MAC Control/non-pause frames (i.e. data frames)
6. “%” If either a MAC control frame or pause frame has a multicast or broadcast destination address then the appropriate statistics will be updated.
7. “%” If either a MAC control frame or pause frame has a multicast or broadcast destination address then the appropriate statistics will be updated.
8. “y^” Frame fragments are not counted if less than 8 bytes.
9. flow coll. are half-duplex collisions forced by the MAC to achieve flow-control. A collision will be forced during the first 8 bytes so should not show in frame fragments. Some of the ‘-‘s in this column might in reality be ‘n’s.
10. The rx_overruns stat show above is for rx_mof_overruns and rx_sof_overruns added together.

Table 11-296. Tx Statistics Summary

Tx Statistic	Frame/Oct	Tx/Rx+Tx	Frame Type					Frame Size (bytes)							Event								
			MAC control		Data			64	65-127	128-255	256-511	512-1023	1024-1535	>1535	CRC error	Collision type					No carrier	Queued	Deferred	Underrun
			Pause (MAC)	Any (CPU)	Multicast	Broadcast	Unicast									flow	1	2-15	16	late				

Copyright © 2025 Texas Instruments Incorporated

Table 11-296. Tx Statistics Summary (continued)

Good Tx Frames	F	Tx	(y|	y|	y|	y|	y)	(y|	y|	y|	y|	y|	y|	y)	-	-	-	-	n	n	n	-	-	n
Broadcast Tx Frames	F	Tx	n	(%|	n	y)	n	(y|	y|	y|	y|	y|	y|	y)	-	-	-	-	n	n	n	-	-	n
Multicast Tx Frames	F	Tx	(y|	%|	y)	n	n	(y|	y|	y|	y|	y|	y|	y)	-	-	-	-	n	n	n	-	-	n
Pause Tx Frames	F	Tx	y	n	n	n	n	y	n	n	n	n	n	n	-	-	-	-	-	-	-	-	-	-
Collisions	F	Tx	n	(y|	y|	y|	y)	(y|	y|	y|	y|	y|	y|	y)	-	(+	+	+	+	+)	n	-	-	-
Single Collision Tx Frames	F	Tx	n	(y|	y|	y|	y)	(y|	y|	y|	y|	y|	y|	y)	-	-	y	n	n	n	n	-	-	-
Multiple Collision Tx Frames	F	Tx	n	(y|	y|	y|	y)	(y|	y|	y|	y|	y|	y|	y)	-	-	n	y	n	n	n	-	-	-
Excessive Collisions	F	Tx	n	(y|	y|	y|	y)	(y|	y|	y|	y|	y|	y|	y)	-	-	n	n	y	n	n	-	-	-
Late Collisions	F	Tx	n	(y|	y|	y|	y)	n	(y|	y|	y|	y|	y|	y)	-	-	-	-	-	y	-	-	-	-

Copyright © 2025 Texas Instruments Incorporated

Table 11-296. Tx Statistics Summary (continued)

Deferred Tx Frames	F	Tx	n	(y|	y|	y|	y)	(y|	y|	y|	y|	y|	y|	y)	-	-	n	n	n	n	n	-	y	n
Carrier Sense Errors	F	Tx	(y|	y|	y|	y|	y)	(y|	y|	y|	y|	y|	y|	y)	-	-	-	-	-	-	y	-	-	-
64octet Frames	F	Rx+Tx	(y|	y|	y|	y|	y)	y	n	n	n	n	n	n	-	-	-	-	n	n	n	-	-	-
65-127 octect Frames	F	Rx+Tx	(y|	y|	y|	y|	y)	n	y	n	n	n	n	n	-	-	-	-	n	n	n	-	-	-
128-255octect Frames	F	Rx+Tx	(y|	y|	y|	y|	y)	n	n	y	n	n	n	n	-	-	-	-	n	n	n	-	-	-
256-511 octect Frames	F	Rx+Tx	(y|	y|	y|	y|	y)	n	n	n	y	n	n	n	-	-	-	-	n	n	n	-	-	-
512-1023octect Frames	F	Rx+Tx	(y|	y|	y|	y|	y)	n	n	n	n	y	n	n	-	-	-	-	n	n	n	-	-	-
1024-UP octect Frames	F	Rx+Tx	(y|	y|	y|	y|	y)	n	n	n	n	n	y	y	-	-	-	-	n	n	n	-	-	-
Tx Octects	O	Tx	(y|	y|	y|	y|	y)	(y|	y|	y|	y|	y|	y|	y)	-	-	-	-	n	n	n	-	-	n

Copyright © 2025 Texas Instruments Incorporated

Table 11-296. Tx Statistics Summary (continued)

Net Octects	O	Rx+Tx	(y|	y|	y|	y|	y)	(y|	y|	y|	y|	y|	y|	y)	-	-	$	$	$	$	$	-	-	-

1. “AND” is assumed horizontally across the table between all conditions which form the statistic (marked y or n) except where (y|y), meaning “OR” is indicated. Parentheses are significant.
2. “-“ indicates conditions which are ignored in the formations of the statistic.
3. Statistics marked “Rx+Tx” are formed by summing the Rx and Tx statistics, each of which is formed independently.
4. Pause(MAC) frames are issued in the MAC as perfect (no CRC error) 64 byte frames in full duplex only, so cannot collide
5. “%” If a CPU sourced MAC control frame has a multicast or broadcast destination address then the appropriate statistics will be updated.
6. “+” indicates collisions which are “summed” (i.e. every collision is counted in the Collisions statistic). Jam sequences used for half-duplex flow control are also counted.
7. “$” Every byte written on the wire during each retry attempt is also counted in addition to frames which experience no collisions or carrier loss.
8. The flow collision type is for half-duplex collisions forced by the MAC to achieve flow control. Some of the ‘-‘s in this column might in reality be ‘n’s. To prevent double-counting, Net Octects are unaffected by the jam sequence – the ‘received’ bytes, however, are counted. (see Rx Statistics table).
9. When the transmit Tx FIFO is drained due to the MAC being disabled or link being lost, then the frames being purged will not appear in the Tx statistics.

11.2.1.5 MCU_CPSW0 Programming Guide

11.2.1.5.1 Initialization and Configuration of CPSW Subsystem

To configure the CPSW Ethernet Subsystem for operation, the host must perform the following:

1. Select the Interface (RMII, or RGMII) Mode. See the CTRLMMR_MCU_ENET_CTRL[1-0] MODE_SEL register.
2. Configure pads (pin muxing), as per the interface selected. Refer to *Pad Configuration Registers* and the device-specific Datasheet.
3. Enable the CPSW Ethernet Subsystem clocks. See Section 11.2.1.3, *CPSW Integration*
4. Ensure that at least 2000 CPPI_ICLK periods are run after reset is de-asserted.
5. Configure the CPSW_CONTROL_REG register
6. Configure the Ethernet Port Source Address registers (CPSW0_PN_SA_L_REG and CPSW_PN_SA_H_REG)
7. Configure the CPSW statistic port enable register CPSW_STAT_PORT_EN_REG
8. Configure the ALE (Section 11.2.1.4.5.1, *Address Lookup Engine*)
9. Configure the MDIO (Section 11.2.1.5.3.1, *Initializing the MDIO Module*)
10. Configure Ethernet port, as per the desired mode of operations

11.2.1.5.2 CPSW Reset

To reset the CPMAC_SL, the host must perform the following:

1. Set CMD_IDLE in the Ethernet port CPSW_PN_MAC_CONTROL_REG register
2. Wait for IDLE to be indicated in the Ethernet port CPSW_PN_MAC_STATUS_REG register
3. Configure the Ethernet ports.

11.2.1.5.3 MDIO Software Interface

11.2.1.5.3.1 Initializing the MDIO Module

The following steps are performed by the application software or device driver to initialize the MDIO device:

1. Configure the PREAMBLE and CLKDIV bits in the MDIO Control register (CPSW_MDIO_CONTROL_REG).

Copyright © 2025 Texas Instruments Incorporated

2. Enable the MDIO module by setting the ENABLE bit in CPSW_MDIO_CONTROL_REG.
3. The MDIO PHY alive status register (MDIO CPSW_MDIO_ALIVE_REG) can be read in polling fashion until a PHY connected to the system responded, and the MDIO PHY link status register (MDIO CPSW_MDIO_LINK_REG) can determine whether this PHY already has a link.
4. Set the appropriate PHY addresses in the MDIO user PHY select register (CPSW_MDIO_USER_PHY_SEL_REG_k, where k = 0 or 1), and set the LINKINT_ENABLE bit to enable a link change event interrupt if desirable.
5. Set the appropriate LINKSEL bit in the CPSW_MDIO_USER_PHY_SEL_REG_k register (where k = 0 or 1).
6. Set the appropriate USERINTMASKSET bit field in the CPSW_MDIO_USER_INT_MASK_SET_REG register.
7. If an interrupt on general MDIO register access is desired, set the corresponding bit in the MDIO user command complete interrupt mask set register (MDIO CPSW_MDIO_USER_INT_MASK_SET_REG) to use the MDIO user access register (MDIO CPSW_MDIO_USER_ACCESS_REG_k, where k = 0 or 1).

11.2.1.5.3.2 Writing Data To a PHY Register

The MDIO module includes a user access register (MDIO CPSW_MDIO_USER_ACCESS_REG_k, where k = 0 or 1) to directly access a specified PHY device.To write a PHY register, perform the following:

1. Check to ensure that the GO bit in the MDIO user access register (MDIO CPSW_MDIO_USER_ACCESS_REG_k) is cleared.
2. Write to the GO, WRITE, REGADR, PHYADR, and DATA bits in MDIO CPSW_MDIO_USER_ACCESS_REG_k corresponding to the PHY and PHY register SW wants to write.
3. The write operation to the PHY is scheduled and completed by the MDIO module. Completion of the write operation can be determined by polling the GO bit in MDIO CPSW_MDIO_USER_ACCESS_REG_k for a 0.
4. Completion of the operation sets the corresponding USERINTRAW bit (0 or 1) in the MDIO user command complete interrupt register (CPSW_MDIO_USER_INT_RAW_REG) corresponding to MDIO CPSW_MDIO_USER_ACCESS_REG_k used. If interrupts have been enabled on this bit using the MDIO user command complete interrupt mask set register (CPSW_MDIO_USER_INT_MASK_SET_REG), then the bit is also set in the MDIO user command complete interrupt register (CPSW_MDIO_USER_INT_MASKED_REG) and an interrupt is triggered on the host processor.

11.2.1.5.3.3 Reading Data From a PHY Register

The MDIO module includes a user access register (MDIO CPSW_MDIO_USER_ACCESS_REG_k, where k = 0 or 1) to directly access a specified PHY device. To read a PHY register, perform the following:

1. Check to ensure that the GO bit in the MDIO user access register (CPSW_MDIO_USER_ACCESS_REG_k, where k = 0 or 1) is cleared.
2. Write to the GO, REGADR, and PHYADR bits in the CPSW_MDIO_USER_ACCESS_REG_k register corresponding to the PHY and PHY register SW wants to read.
3. The read data value is available in the DATA bit field in MDIO CPSW_MDIO_USER_ACCESS_REG_k register after the module completes the read operation on the serial bus. Completion of the read operation can be determined by polling the GO and ACK bits in CPSW_MDIO_USER_ACCESS_REG_k register. After the GO bit has cleared, the ACK bit is set on a successful read.
4. Completion of the operation sets the corresponding USERINTRAW bit (0 or 1) in the MDIO user command complete interrupt register (CPSW_MDIO_USER_INT_RAW_REG) corresponding to MDIO CPSW_MDIO_USER_ACCESS_REG_k used. If interrupts have been enabled on this bit using the MDIO user command complete interrupt mask set register (CPSW_MDIO_USER_INT_MASK_SET_REG), then the bit is also set in the MDIO user command complete interrupt register (CPSW_MDIO_USER_INT_MASKED_REG) and an interrupt is triggered on the host processor.

Copyright © 2025 Texas Instruments Incorporated

11.2.1.6 MSS_CPSW Registers

Table 11-297 lists the memory-mapped registers for the MSS_CPSW registers. All register offset addresses not listed in Table 11-297 should be considered as reserved locations and the register contents should not be modified.

Table 11-297. MSS_CPSW Registers

Offset	Acronym	Register Name	Section
0h	SS_IDVER_REG	ID Version Register	Go
4h	SS_SYNCE_COUNT_REG	SyncE Count Register	Go
8h	SS_SYNCE_MUX_REG	SyncE Mux Register	Go
Ch	SS_CONTROL_REG	Control Register	Go
18h	SS_INT_CONTROL_REG	Interrupt Control Register	Go
1Ch	SS_STATUS_REG	Subsystem Status Register	Go
30h	SS_RGMII1_STATUS_REG	RGMII1 Status Register	Go
80h	SS_TH_THRESH_PULSE_EN_REG	THost Threshold Pulse Interrupt Enable Register	Go
84h	SS_TH_PULSE_EN_REG	THost Pulse Interrupt Enable Register	Go
88h	SS_FH_PULSE_EN_REG	FHost Pulse Interrupt Enable Register	Go
8Ch	SS_MISC_EN_REG	Misc Interrupt Enable Register	Go
B0h	SS_TH_THRESH_PULSE_STATUS_REG	THost Threshold Pulse Interrupt Status Register	Go
B4h	SS_TH_PULSE_STATUS_REG	THost Pulse Interrupt Status Register	Go
B8h	SS_FH_PULSE_STATUS_REG	FHost Pulse Interrupt Status Register	Go
BCh	SS_MISC_STATUS_REG	Misc Interrupt Status Register	Go
E0h	SS_TH_IMAX_REG	THost Interrupt Max Register Register	Go
E4h	SS_FH_IMAX_REG	FHost Interrupt Max Register Register	Go
F00h	MDIO_VERSION_REG	version_reg	Go
F04h	CONTROL_REG	control_reg	Go
F08h	ALIVE_REG	alive_reg	Go
F0Ch	LINK_REG	link_reg	Go
F10h	LINK_INT_RAW_REG	link_int_raw_reg	Go
F14h	LINK_INT_MASKED_REG	link_int_masked_reg	Go
F18h	LINK_INT_MASK_SET_REG	link_int_mask_set_reg	Go
F1Ch	LINK_INT_MASK_CLEAR_REG	link_int_mask_clear_reg	Go
F20h	USER_INT_RAW_REG	user_int_raw_reg	Go
F24h	USER_INT_MASKED_REG	user_int_masked_reg	Go
F28h	USER_INT_MASK_SET_REG	user_int_mask_set_reg	Go
F2Ch	USER_INT_MASK_CLEAR_REG	user_int_mask_clear_reg	Go
F30h	MANUAL_IF_REG	manual_if_reg	Go
F34h	POLL_REG	poll_reg	Go
F38h	POLL_EN_REG	poll_reg	Go
F3Ch	CLAUS45_REG	poll_reg	Go
F40h	USER_ADDR0_REG	poll_reg	Go
F44h	USER_ADDR1_REG	poll_reg	Go
F80h	USER_ACCESS_REG	user_access_reg	Go
F84h	USER_PHY_SEL_REG	user_phy_sel_reg	Go
00020000h	CPSW_ID_VER_REG	idver_reg	Go
00020004h	CONTROL_REG	control_reg	Go
00020010h	EM_CONTROL_REG	em_control_reg	Go
00020014h	STAT_PORT_EN_REG	stat_port_en_reg	Go

Copyright © 2025 Texas Instruments Incorporated

Table 11-297. MSS_CPSW Registers (continued)

Offset	Acronym	Register Name	Section
00020018h	PTYPE_REG	ptype_reg	Go
0002001Ch	SOFT_IDLE_REG	soft_idle_reg	Go
00020020h	THRU_RATE_REG	thru_rate_reg	Go
00020024h	GAP_THRESH_REG	gap_thresh_reg	Go
00020028h	TX_START_WDS_REG	tx_start_wds_reg	Go
0002002Ch	EEE_PRESCALE_REG	eee_prescale_reg	Go
00020030h	TX_G_OFLOW_THRESH_SET_REG	tx_g_oflow_thresh_set_reg	Go
00020034h	TX_G_OFLOW_THRESH_CLR_REG	tx_g_oflow_thresh_clr_reg	Go
00020038h	TX_G_BUF_THRESH_SET_L_REG	tx_g_buf_thresh_set_l_reg	Go
0002003Ch	TX_G_BUF_THRESH_SET_H_REG	tx_g_buf_thresh_set_h_reg	Go
00020040h	TX_G_BUF_THRESH_CLR_L_REG	tx_g_buf_thresh_clr_l_reg	Go
00020044h	TX_G_BUF_THRESH_CLR_H_REG	tx_g_buf_thresh_clr_h_reg	Go
00020050h	VLAN_LTYPE_REG	vlan_ltype_reg	Go
00020054h	EST_TS_DOMAIN_REG	est_ts_domain_reg	Go
00020100h	TX_PRI0_MAXLEN_REG	tx_pri0_maxlen_reg	Go
00020104h	TX_PRI1_MAXLEN_REG	tx_pri1_maxlen_reg	Go
00020108h	TX_PRI2_MAXLEN_REG	tx_pri2_maxlen_reg	Go
0002010Ch	TX_PRI3_MAXLEN_REG	tx_pri3_maxlen_reg	Go
00020110h	TX_PRI4_MAXLEN_REG	tx_pri4_maxlen_reg	Go
00020114h	TX_PRI5_MAXLEN_REG	tx_pri5_maxlen_reg	Go
00020118h	TX_PRI6_MAXLEN_REG	tx_pri6_maxlen_reg	Go
0002011Ch	TX_PRI7_MAXLEN_REG	tx_pri7_maxlen_reg	Go
00021004h	P0_CONTROL_REG	p0_control_reg	Go
00021008h	P0_FLOW_ID_OFFSET_REG	p0_flow_id_offset_reg	Go
00021010h	P0_BLK_CNT_REG	p0_blk_cnt_reg	Go
00021014h	P0_PORT_VLAN_REG	p0_port_vlan_reg	Go
00021018h	P0_TX_PRI_MAP_REG	p0_tx_pri_map_reg	Go
0002101Ch	P0_PRI_CTL_REG	p0_pri_ctl_reg	Go
00021020h	P0_RX_PRI_MAP_REG	p0_rx_pri_map_reg	Go
00021024h	P0_RX_MAXLEN_REG	p0_rx_maxlen_reg	Go
00021028h	P0_TX_BLKS_PRI_REG	p0_tx_blks_pri_reg	Go
00021030h	P0_IDLE2LPI_REG	p0_idle2lpi_reg	Go
00021034h	P0_LPI2WAKE_REG	p0_lpi2wake_reg	Go
00021038h	P0_EEE_STATUS_REG	p0_eee_status_reg	Go
0002103Ch	P0_RX_PKTS_PRI_REG	p0_rx_pkts_pri_reg	Go
0002104Ch	P0_RX_GAP_REG	p0_rx_gap_reg	Go
00021050h	P0_FIFO_STATUS_REG	p0_fifo_status_reg	Go
00021120h + formula	P0_RX_DSCP_MAP_REG_y	p0_rx_dscp_map_reg	Go
00021140h + formula	P0_PRI_CIR_REG_y	p0_pri_cir_reg	Go
00021160h + formula	P0_PRI_EIR_REG_y	p0_pri_eir_reg	Go
00021180h	P0_TX_D_THRESH_SET_L_REG	p0_tx_d_thresh_set_l_reg	Go
00021184h	P0_TX_D_THRESH_SET_H_REG	p0_tx_d_thresh_set_h_reg	Go
00021188h	P0_TX_D_THRESH_CLR_L_REG	p0_tx_d_thresh_clr_l_reg	Go

Copyright © 2025 Texas Instruments Incorporated

Table 11-297. MSS_CPSW Registers (continued)

Offset	Acronym	Register Name	Section
0002118Ch	P0_TX_D_THRESH_CLR_H_REG	p0_tx_d_thresh_clr_h_reg	Go
00021190h	P0_TX_G_BUF_THRESH_SET_L_REG	p0_tx_g_buf_thresh_set_l_reg	Go
00021194h	P0_TX_G_BUF_THRESH_SET_H_REG	p0_tx_g_buf_thresh_set_h_reg	Go
00021198h	P0_TX_G_BUF_THRESH_CLR_L_REG	p0_tx_g_buf_thresh_clr_l_reg	Go
0002119Ch	P0_TX_G_BUF_THRESH_CLR_H_REG	p0_tx_g_buf_thresh_clr_h_reg	Go
00021300h	P0_SRC_ID_A_REG	p0_src_id_a_reg	Go
00021304h	P0_SRC_ID_B_REG	p0_src_id_b_reg	Go
00021320h	P0_HOST_BLKS_PRI_REG	p0_host_blks_pri_reg	Go
00022000h	PN_RESERVED_REG	pn_reserved_reg	Go
00022004h	PN_CONTROL_REG	pn_control_reg	Go
00022008h	PN_MAX_BLKS_REG	pn_max_blks_reg	Go
00022010h	PN_BLK_CNT_REG	pn_blk_cnt_reg	Go
00022014h	PN_PORT_VLAN_REG	pn_port_vlan_reg	Go
00022018h	PN_TX_PRI_MAP_REG	pn_tx_pri_map_reg	Go
0002201Ch	PN_PRI_CTL_REG	pn_pri_ctl_reg	Go
00022020h	PN_RX_PRI_MAP_REG	pn_rx_pri_map_reg	Go
00022024h	PN_RX_MAXLEN_REG	pn_rx_maxlen_reg	Go
00022028h	PN_TX_BLKS_PRI_REG	pn_tx_blks_pri_reg	Go
0002202Ch	PN_RX_FLOW_THRESH_REG	pn_rx_flow_thresh_reg	Go
00022030h	PN_IDLE2LPI_REG	pn_idle2lpi_reg	Go
00022034h	PN_LPI2WAKE_REG	pn_lpi2wake_reg	Go
00022038h	PN_EEE_STATUS_REG	pn_eee_status_reg	Go
00022050h	PN_FIFO_STATUS_REG	pn_fifo_status_reg	Go
00022060h	PN_EST_CONTROL_REG	pn_est_control_reg	Go
00022120h + formula	PN_RX_DSCP_MAP_REG_y	pn_rx_dscp_map_reg	Go
00022140h + formula	PN_PRI_CIR_REG_y	pn_pri_send_reg	Go
00022160h + formula	PN_PRI_EIR_REG_y	pn_pri_idle_reg	Go
00022180h	PN_TX_D_THRESH_SET_L_REG	pn_tx_d_thresh_set_l_reg	Go
00022184h	PN_TX_D_THRESH_SET_H_REG	pn_tx_d_thresh_set_h_reg	Go
00022188h	PN_TX_D_THRESH_CLR_L_REG	pn_tx_d_thresh_clr_l_reg	Go
0002218Ch	PN_TX_D_THRESH_CLR_H_REG	pn_tx_d_thresh_clr_h_reg	Go
00022190h	PN_TX_G_BUF_THRESH_SET_L_REG	pn_tx_g_buf_thresh_set_l_reg	Go
00022194h	PN_TX_G_BUF_THRESH_SET_H_REG	pn_tx_g_buf_thresh_set_h_reg	Go
00022198h	PN_TX_G_BUF_THRESH_CLR_L_REG	pn_tx_g_buf_thresh_clr_l_reg	Go
0002219Ch	PN_TX_G_BUF_THRESH_CLR_H_REG	pn_tx_g_buf_thresh_clr_h_reg	Go
00022300h	PN_TX_D_OFLOW_ADDVAL_L_REG	pn_tx_d_oflow_addval_l_reg	Go
00022304h	PN_TX_D_OFLOW_ADDVAL_H_REG	pn_tx_d_oflow_addval_h_reg	Go
00022308h	PN_SA_L_REG	pn_sa_l_reg	Go
0002230Ch	PN_SA_H_REG	pn_sa_h_reg	Go
00022310h	PN_TS_CTL_REG	pn_ts_ctl_reg	Go
00022314h	PN_TS_SEQ_LTYPE_REG	pn_ts_seq_ltype_reg	Go
00022318h	PN_TS_VLAN_LTYPE_REG	pn_ts_vlan_ltype_reg	Go
0002231Ch	PN_TS_CTL_LTYPE2_REG	pn_ts_ctl_ltype2_reg	Go

Copyright © 2025 Texas Instruments Incorporated

Table 11-297. MSS_CPSW Registers (continued)

Offset	Acronym	Register Name	Section
00022320h	PN_TS_CTL2_REG	pn_ts_ctl2_reg	Go
00022330h	PN_MAC_CONTROL_REG	pn_mac_control_reg	Go
00022334h	PN_MAC_STATUS_REG	pn_mac_status_reg	Go
00022338h	PN_MAC_SOFT_RESET_REG	pn_mac_soft_reset_reg	Go
0002233Ch	PN_MAC_BOFFTEST_REG	pn_mac_bofftest_reg	Go
00022340h	PN_MAC_RX_PAUSETIMER_REG	pn_mac_rx_pausetimer_reg	Go
00022350h + formula	PN_MAC_RXN_PAUSETIMER_REG_y	pn_mac_rxn_pausetimer_reg	Go
00022370h	PN_MAC_TX_PAUSETIMER_REG	pn_mac_tx_pausetimer_reg	Go
00022380h + formula	PN_MAC_TXN_PAUSETIMER_REG_y	pn_mac_txn_pausetimer_reg	Go
000223A0h	PN_MAC_EMCONTROL_REG	pn_mac_emcontrol_reg	Go
000223A4h	PN_MAC_TX_GAP_REG	pn_mac_tx_gap_reg	Go
000223ACh	PN_INTERVLAN_OPX_POINTER_REG	pn_opx_pointer_reg	Go
000223B0h	PN_INTERVLAN_OPX_A_REG	pn_opx_a_reg	Go
000223B4h	PN_INTERVLAN_OPX_B_REG	pn_opx_b_reg	Go
000223B8h	PN_INTERVLAN_OPX_C_REG	pn_opx_c_reg	Go
000223BCh	PN_INTERVLAN_OPX_D_REG	pn_opx_d_reg	Go
00032000h + formula	FETCH_LOC_y	Revision Register	Go
00034000h	CPDMA_FH_IDVER_REG	CPDMA Transmit IDVER	Go
00034004h	CPDMA_FH_CONTROL_REG	CPDMA Transmit Control Register	Go
00034008h	CPDMA_FH_TEARDOWN_REG	CPDMA Transmit Teardown Register	Go
00034010h	CPDMA_TH_IDVER_REG	CPDMA Receive IDVER	Go
00034014h	CPDMA_TH_CONTROL_REG	CPDMA Receive Control Register	Go
00034018h	CPDMA_TH_TEARDOWN_REG	CPDMA Receive Teardown Register	Go
0003401Ch	CPDMA_SOFT_RESET_REG	CPDMA Soft Reset Register	Go
00034020h	CPDMA_CONTROL_REG	CPDMA Control Register	Go
00034024h	CPDMA_STATUS_REG	CPDMA Status Register	Go
00034028h	CPDMA_TH_BUFFER_OFFSET_REG	CPDMA Receive Buffer Offset Register	Go
0003402Ch	CPDMA_EMULATION_CONTROL_REG	CPDMA Receive Buffer Offset Register	Go
00034080h	CPDMA_FH_INTSTAT_RAW_REG	CPDMA FHost Interrupt Status RAW	Go
00034084h	CPDMA_FH_INTSTAT_MASKED_REG	CPDMA FHost Interrupt Status MASKED	Go
00034088h	CPDMA_FH_INTSTAT_MASKED_SET_REG	CPDMA FHost Interrupt Masked Set	Go
0003408Ch	CPDMA_FH_INTSTAT_MASKED_CLR_REG	CPDMA FHost Interrupt Masked Clr	Go
00034090h	CPDMA_IN_VECTOR_REG	CPDMA DMA IN Vector	Go
00034094h	CPDMA_EOI_VECTOR_REG	CPDMA DMA EOI Vector	Go
000340A0h	CPDMA_TH_INTSTAT_RAW_REG	CPDMA receive Interrupt Status RAW	Go
000340A4h	CPDMA_TH_INTSTAT_MASKED_REG	CPDMA receive Interrupt Status MASKED	Go
000340A8h	CPDMA_TH_INTSTAT_SET_REG	CPDMA receive Interrupt Status SET	Go
000340ACh	CPDMA_TH_INTSTAT_CLR_REG	CPDMA receive Interrupt Status CLR	Go
000340B0h	CPDMA_INTSTAT_RAW_REG	CPDMA DMA Interrupt Status RAW	Go
000340B4h	CPDMA_INTSTAT_MASKED_REG	CPDMA DMA Interrupt Status MASKED	Go
000340B8h	CPDMA_INTSTAT_SET_REG	CPDMA DMA Interrupt Status SET	Go
000340BCh	CPDMA_INTSTAT_CLR_REG	CPDMA DMA Interrupt Status CLR	Go

Copyright © 2025 Texas Instruments Incorporated

Table 11-297. MSS_CPSW Registers (continued)

Offset	Acronym	Register Name	Section
000340C0h	CPDMA_TH0_PENDTHRESH_REG	CPDMA THost Threshold Pending Register	Go
000340C4h	CPDMA_TH1_PENDTHRESH_REG	CPDMA THost Threshold Pending Register	Go
000340C8h	CPDMA_TH2_PENDTHRESH_REG	CPDMA THost Threshold Pending Register	Go
000340CCh	CPDMA_TH3_PENDTHRESH_REG	CPDMA THost Threshold Pending Register	Go
000340D0h	CPDMA_TH4_PENDTHRESH_REG	CPDMA THost Threshold Pending Register	Go
000340D4h	CPDMA_TH5_PENDTHRESH_REG	CPDMA THost Threshold Pending Register	Go
000340D8h	CPDMA_TH6_PENDTHRESH_REG	CPDMA THost Threshold Pending Register	Go
000340DCh	CPDMA_TH7_PENDTHRESH_REG	CPDMA THost Threshold Pending Register	Go
000340E0h	CPDMA_TH0_FREEBUFFER_REG	CPDMA THost Free Buffer Register	Go
000340E4h	CPDMA_TH1_FREEBUFFER_REG	CPDMA THost Free Buffer Register	Go
000340E8h	CPDMA_TH2_FREEBUFFER_REG	CPDMA THost Free Buffer Register	Go
000340ECh	CPDMA_TH3_FREEBUFFER_REG	CPDMA THost Free Buffer Register	Go
000340F0h	CPDMA_TH4_FREEBUFFER_REG	CPDMA THost Free Buffer Register	Go
000340F4h	CPDMA_TH5_FREEBUFFER_REG	CPDMA THost Free Buffer Register	Go
000340F8h	CPDMA_TH6_FREEBUFFER_REG	CPDMA THost Free Buffer Register	Go
000340FCh	CPDMA_TH7_FREEBUFFER_REG	CPDMA THost Free Buffer Register	Go
00034200h	CPDMA_FH0_HDP_REG	CPDMA FHost Channel 0 HDP	Go
00034204h	CPDMA_FH1_HDP_REG	CPDMA FHost Channel 1 HDP	Go
00034208h	CPDMA_FH2_HDP_REG	CPDMA FHost Channel 2 HDP	Go
0003420Ch	CPDMA_FH3_HDP_REG	CPDMA FHost Channel 3 HDP	Go
00034210h	CPDMA_FH4_HDP_REG	CPDMA FHost Channel 4 HDP	Go
00034214h	CPDMA_FH5_HDP_REG	CPDMA FHost Channel 5 HDP	Go
00034218h	CPDMA_FH6_HDP_REG	CPDMA FHost Channel 6 HDP	Go
0003421Ch	CPDMA_FH7_HDP_REG	CPDMA FHost Channel 7 HDP	Go
00034220h	CPDMA_TH0_HDP_REG	CPDMA THost Channel 0 HDP	Go
00034224h	CPDMA_TH1_HDP_REG	CPDMA THost Channel 1 HDP	Go
00034228h	CPDMA_TH2_HDP_REG	CPDMA THost Channel 2 HDP	Go
0003422Ch	CPDMA_TH3_HDP_REG	CPDMA THost Channel 3 HDP	Go
00034230h	CPDMA_TH4_HDP_REG	CPDMA THost Channel 4 HDP	Go
00034234h	CPDMA_TH5_HDP_REG	CPDMA THost Channel 5 HDP	Go
00034238h	CPDMA_TH6_HDP_REG	CPDMA THost Channel 6 HDP	Go
0003423Ch	CPDMA_TH7_HDP_REG	CPDMA THost Channel 7 HDP	Go
00034240h	CPDMA_FH0_CP_REG	CPDMA FHost Channel 0 CP	Go
00034244h	CPDMA_FH1_CP_REG	CPDMA FHost Channel 1 CP	Go
00034248h	CPDMA_FH2_CP_REG	CPDMA FHost Channel 2 CP	Go
0003424Ch	CPDMA_FH3_CP_REG	CPDMA FHost Channel 3 CP	Go
00034250h	CPDMA_FH4_CP_REG	CPDMA FHost Channel 4 CP	Go
00034254h	CPDMA_FH5_CP_REG	CPDMA FHost Channel 5 CP	Go
00034258h	CPDMA_FH6_CP_REG	CPDMA FHost Channel 6 CP	Go
0003425Ch	CPDMA_FH7_CP_REG	CPDMA FHost Channel 7 CP	Go
00034260h	CPDMA_TH0_CP_REG	CPDMA THost Channel 0 CP	Go
00034264h	CPDMA_TH1_CP_REG	CPDMA THost Channel 1 CP	Go
00034268h	CPDMA_TH2_CP_REG	CPDMA THost Channel 2 CP	Go
0003426Ch	CPDMA_TH3_CP_REG	CPDMA THost Channel 3 CP	Go
00034270h	CPDMA_TH4_CP_REG	CPDMA THost Channel 4 CP	Go

Copyright © 2025 Texas Instruments Incorporated

Table 11-297. MSS_CPSW Registers (continued)

Offset	Acronym	Register Name	Section
00034274h	CPDMA_TH5_CP_REG	CPDMA THost Channel 5 CP	Go
00034278h	CPDMA_TH6_CP_REG	CPDMA THost Channel 6 CP	Go
0003427Ch	CPDMA_TH7_CP_REG	CPDMA THost Channel 7 CP	Go
00034300h	TEST_CPDMA_FH0_HDP_REG	Test CPDMA FHost Channel 0 HDP	Go
00034304h	TEST_CPDMA_FH1_HDP_REG	Test CPDMA FHost Channel 1 HDP	Go
00034308h	TEST_CPDMA_FH2_HDP_REG	Test CPDMA FHost Channel 2 HDP	Go
0003430Ch	TEST_CPDMA_FH3_HDP_REG	Test CPDMA FHost Channel 3 HDP	Go
00034310h	TEST_CPDMA_FH4_HDP_REG	Test CPDMA FHost Channel 4 HDP	Go
00034314h	TEST_CPDMA_FH5_HDP_REG	Test CPDMA FHost Channel 5 HDP	Go
00034318h	TEST_CPDMA_FH6_HDP_REG	Test CPDMA FHost Channel 6 HDP	Go
0003431Ch	TEST_CPDMA_FH7_HDP_REG	Test CPDMA FHost Channel 7 HDP	Go
00034320h	TEST_CPDMA_TH0_HDP_REG	Test CPDMA THost Channel 0 HDP	Go
00034324h	TEST_CPDMA_TH1_HDP_REG	Test CPDMA THost Channel 1 HDP	Go
00034328h	TEST_CPDMA_TH2_HDP_REG	Test CPDMA THost Channel 2 HDP	Go
0003432Ch	TEST_CPDMA_TH3_HDP_REG	Test CPDMA THost Channel 3 HDP	Go
00034330h	TEST_CPDMA_TH4_HDP_REG	Test CPDMA THost Channel 4 HDP	Go
00034334h	TEST_CPDMA_TH5_HDP_REG	Test CPDMA THost Channel 5 HDP	Go
00034338h	TEST_CPDMA_TH6_HDP_REG	Test CPDMA THost Channel 6 HDP	Go
0003433Ch	TEST_CPDMA_TH7_HDP_REG	Test CPDMA THost Channel 7 HDP	Go
00034340h	TEST_CPDMA_FH0_CP_REG	Test CPDMA FHost Channel 0 CP	Go
00034344h	TEST_CPDMA_FH1_CP_REG	Test CPDMA FHost Channel 1 CP	Go
00034348h	TEST_CPDMA_FH2_CP_REG	Test CPDMA FHost Channel 2 CP	Go
0003434Ch	TEST_CPDMA_FH3_CP_REG	Test CPDMA FHost Channel 3 CP	Go
00034350h	TEST_CPDMA_FH4_CP_REG	Test CPDMA FHost Channel 4 CP	Go
00034354h	TEST_CPDMA_FH5_CP_REG	Test CPDMA FHost Channel 5 CP	Go
00034358h	TEST_CPDMA_FH6_CP_REG	Test CPDMA FHost Channel 6 CP	Go
0003435Ch	TEST_CPDMA_FH7_CP_REG	Test CPDMA FHost Channel 7 CP	Go
00034360h	TEST_CPDMA_TH0_CP_REG	Test CPDMA THost Channel 0 CP	Go
00034364h	TEST_CPDMA_TH1_CP_REG	Test CPDMA THost Channel 1 CP	Go
00034368h	TEST_CPDMA_TH2_CP_REG	Test CPDMA THost Channel 2 CP	Go
0003436Ch	TEST_CPDMA_TH3_CP_REG	Test CPDMA THost Channel 3 CP	Go
00034370h	TEST_CPDMA_TH4_CP_REG	Test CPDMA THost Channel 4 CP	Go
00034374h	TEST_CPDMA_TH5_CP_REG	Test CPDMA THost Channel 5 CP	Go
00034378h	TEST_CPDMA_TH6_CP_REG	Test CPDMA THost Channel 6 CP	Go
0003437Ch	TEST_CPDMA_TH7_CP_REG	Test CPDMA THost Channel 7 CP	Go
0003A000h	RXGOODFRAMES	RxGoodFrames	Go
0003A004h	RXBROADCASTFRAMES	RxBroadcastFrames	Go
0003A008h	RXMULTICASTFRAMES	RxMulticastFrames	Go
0003A010h	RXCRCERRORS	RxCRCErrors	Go
0003A018h	RXOVERSIZEDFRAMES	RxOversizedFrames	Go
0003A020h	RXUNDERSIZEDFRAMES	RxUndersizedFrames	Go
0003A024h	RXFRAGMENTS	RxFragments	Go
0003A028h	ALE_DROP	ALE_Drop	Go
0003A02Ch	ALE_OVERRUN_DROP	ALE_Overrun_Drop	Go
0003A030h	RXOCTETS	RxOctets	Go

Copyright © 2025 Texas Instruments Incorporated

Table 11-297. MSS_CPSW Registers (continued)

Offset	Acronym	Register Name	Section
0003A034h	TXGOODFRAMES	TxGoodFrames	Go
0003A038h	TXBROADCASTFRAMES	TxBroadcastFrames	Go
0003A03Ch	TXMULTICASTFRAMES	TxMulticastFrames	Go
0003A04Ch	TXSINGLECOLLFRAMES	TxSingleCollFrames	Go
0003A050h	TXMULTCOLLFRAMES	TxMultCollFrames	Go
0003A064h	TXOCTETS	TxOctets	Go
0003A068h	OCTETFRAMES64	OctetFrames64	Go
0003A06Ch	OCTETFRAMES65T127	OctetFrames65t127	Go
0003A070h	OCTETFRAMES128T255	OctetFrames128t255	Go
0003A074h	OCTETFRAMES256T511	OctetFrames256t511	Go
0003A078h	OCTETFRAMES512T1023	OctetFrames512t1023	Go
0003A07Ch	OCTETFRAMES1024TUP	OctetFrames1024tUP	Go
0003A080h	NETOCTETS	NetOctets	Go
0003A084h	RX_BOTTOM_OF_FIFO_DROP	Rx_Bottom_of_FIFO_Drop	Go
0003A088h	PORTMASK_DROP	Portmask_Drop	Go
0003A08Ch	RX_TOP_OF_FIFO_DROP	Rx_Top_of_FIFO_Drop	Go
0003A090h	ALE_RATE_LIMIT_DROP	ALE_Rate_Limit_Drop	Go
0003A094h	ALE_VID_INGRESS_DROP	ALE_VID_Ingress_Drop	Go
0003A098h	ALE_DA_EQ_SA_DROP	ALE_DA_EQ_SA_Drop	Go
0003A09Ch	ALE_BLOCK_DROP	ALE_Block_Drop	Go
0003A0A0h	ALE_SECURE_DROP	ALE_Secure_Drop	Go
0003A0A4h	ALE_AUTH_DROP	ALE_Auth_Drop	Go
0003A0A8h	ALE_UNKN_UNI	ALE_Unkn_Uni	Go
0003A0ACh	ALE_UNKN_UNI_BCNT	ALE_Unkn_Uni_Bcnt	Go
0003A0B0h	ALE_UNKN_MLT	ALE_Unkn_Mlt	Go
0003A0B4h	ALE_UNKN_MLT_BCNT	ALE_Unkn_Mlt_Bcnt	Go
0003A0B8h	ALE_UNKN_BRD	ALE_Unkn_Brd	Go
0003A0BCh	ALE_UNKN_BRD_BCNT	ALE_Unkn_Brd_Bcnt	Go
0003A0C0h	ALE_POL_MATCH	ALE_Pol_Match	Go
0003A0C4h	ALE_POL_MATCH_RED	ALE_Pol_Match_Red	Go
0003A0C8h	ALE_POL_MATCH_YELLOW	ALE_Pol_Match_Yellow	Go
0003A0CCh	ALE_MULT_SA_DROP	ALE_MULT_SA_DROP	Go
0003A0D0h	ALE_DUAL_VLAN_DROP	ALE_DUAL_VLAN_DROP	Go
0003A0D4h	ALE_LEN_ERROR_DROP	ALE_LEN_ERROR_DROP	Go
0003A0D8h	ALE_IP_NEXT_HDR_DROP	ALE_IP_NEXT_HDR_DROP	Go
0003A0DCh	ALE_IPV4_FRAG_DROP	ALE_IPV4_FRAG_DROP	Go
0003A17Ch	TX_MEMORY_PROTECT_ERROR	Tx_Memory_Protect_Error	Go
0003A200h	RXGOODFRAMES	RxGoodFrames	Go
0003A204h	RXBROADCASTFRAMES	RxBroadcastFrames	Go
0003A208h	RXMULTICASTFRAMES	RxMulticastFrames	Go
0003A20Ch	RXPAUSEFRAMES	RxPauseFrames	Go
0003A210h	RXCRCERRORS	RxCRCErrors	Go
0003A214h	RXALIGNCODEERRORS	RxAlignCodeErrors	Go
0003A218h	RXOVERSIZEDFRAMES	RxOversizedFrames	Go
0003A21Ch	RXJABBERFRAMES	RxJabberFrames	Go

Copyright © 2025 Texas Instruments Incorporated

Table 11-297. MSS_CPSW Registers (continued)

Offset	Acronym	Register Name	Section
0003A220h	RXUNDERSIZEDFRAMES	RxUndersizedFrames	Go
0003A224h	RXFRAGMENTS	RxFragments	Go
0003A228h	ALE_DROP	ALE_Drop	Go
0003A22Ch	ALE_OVERRUN_DROP	ALE_Overrun_Drop	Go
0003A230h	RXOCTETS	RxOctets	Go
0003A234h	TXGOODFRAMES	TxGoodFrames	Go
0003A238h	TXBROADCASTFRAMES	TxBroadcastFrames	Go
0003A23Ch	TXMULTICASTFRAMES	TxMulticastFrames	Go
0003A240h	TXPAUSEFRAMES	TxPauseFrames	Go
0003A244h	TXDEFERREDFRAMES	TxDeferredFrames	Go
0003A248h	TXCOLLISIONFRAMES	TxCollisionFrames	Go
0003A24Ch	TXSINGLECOLLFRAMES	TxSingleCollFrames	Go
0003A250h	TXMULTCOLLFRAMES	TxMultCollFrames	Go
0003A254h	TXEXCESSIVECOLLISIONS	TxExcessiveCollisions	Go
0003A258h	TXLATECOLLISIONS	TxLateCollisions	Go
0003A25Ch	RXIPGERROR	RxIPGError	Go
0003A260h	TXCARRIERSENSEERRORS	TxCarrierSenseErrors	Go
0003A264h	TXOCTETS	TxOctets	Go
0003A268h	OCTETFRAMES64	OctetFrames64	Go
0003A26Ch	OCTETFRAMES65T127	OctetFrames65t127	Go
0003A270h	OCTETFRAMES128T255	OctetFrames128t255	Go
0003A274h	OCTETFRAMES256T511	OctetFrames256t511	Go
0003A278h	OCTETFRAMES512T1023	OctetFrames512t1023	Go
0003A27Ch	OCTETFRAMES1024TUP	OctetFrames1024tUP	Go
0003A280h	NETOCTETS	NetOctets	Go
0003A284h	RX_BOTTOM_OF_FIFO_DROP	Rx_Bottom_of_FIFO_Drop	Go
0003A288h	PORTMASK_DROP	Portmask_Drop	Go
0003A28Ch	RX_TOP_OF_FIFO_DROP	Rx_Top_of_FIFO_Drop	Go
0003A290h	ALE_RATE_LIMIT_DROP	ALE_Rate_Limit_Drop	Go
0003A294h	ALE_VID_INGRESS_DROP	ALE_VID_Ingress_Drop	Go
0003A298h	ALE_DA_EQ_SA_DROP	ALE_DA_EQ_SA_Drop	Go
0003A29Ch	ALE_BLOCK_DROP	ALE_Block_Drop	Go
0003A2A0h	ALE_SECURE_DROP	ALE_Secure_Drop	Go
0003A2A4h	ALE_AUTH_DROP	ALE_Auth_Drop	Go
0003A2A8h	ALE_UNKN_UNI	ALE_Unkn_Uni	Go
0003A2ACh	ALE_UNKN_UNI_BCNT	ALE_Unkn_Uni_Bcnt	Go
0003A2B0h	ALE_UNKN_MLT	ALE_Unkn_Mlt	Go
0003A2B4h	ALE_UNKN_MLT_BCNT	ALE_Unkn_Mlt_Bcnt	Go
0003A2B8h	ALE_UNKN_BRD	ALE_Unkn_Brd	Go
0003A2BCh	ALE_UNKN_BRD_BCNT	ALE_Unkn_Brd_Bcnt	Go
0003A2C0h	ALE_POL_MATCH	ALE_Pol_Match	Go
0003A2C4h	ALE_POL_MATCH_RED	ALE_Pol_Match_Red	Go
0003A2C8h	ALE_POL_MATCH_YELLOW	ALE_Pol_Match_Yellow	Go
0003A2CCh	ALE_MULT_SA_DROP	ALE_MULT_SA_DROP	Go
0003A2D0h	ALE_DUAL_VLAN_DROP	ALE_DUAL_VLAN_DROP	Go

Copyright © 2025 Texas Instruments Incorporated

Table 11-297. MSS_CPSW Registers (continued)

Offset	Acronym	Register Name	Section
0003A2D4h	ALE_LEN_ERROR_DROP	ALE_LEN_ERROR_DROP	Go
0003A2D8h	ALE_IP_NEXT_HDR_DROP	ALE_IP_NEXT_HDR_DROP	Go
0003A2DCh	ALE_IPV4_FRAG_DROP	ALE_IPV4_FRAG_DROP	Go
0003A37Ch	TX_MEMORY_PROTECT_ERROR	Tx_Memory_Protect_Error	Go
0003A380h + formula	ENET_PN_TX_PRI_REG_y	enet_pn_tx_pri	Go
0003A3A0h + formula	ENET_PN_TX_PRI_BCNT_REG_y	enet_pn_tx_pri_bcnt	Go
0003A3C0h + formula	ENET_PN_TX_PRI_DROP_REG_y	enet_pn_tx_pri_drop	Go
0003A3E0h + formula	ENET_PN_TX_PRI_DROP_BCNT_REG_y	enet_pn_tx_pri_drop_bcnt	Go
0003D000h	IDVER_REG	idver_reg	Go
0003D004h	CONTROL_REG	control_reg	Go
0003D008h	RFTCLK_SEL_REG	rftclk_sel_reg	Go
0003D00Ch	TS_PUSH_REG	ts_push_reg	Go
0003D010h	TS_LOAD_VAL_REG	ts_load_low_val_reg	Go
0003D014h	TS_LOAD_EN_REG	ts_load_en_reg	Go
0003D018h	TS_COMP_VAL_REG	ts_comp_low_val_reg	Go
0003D01Ch	TS_COMP_LEN_REG	ts_comp_len_reg	Go
0003D020h	INTSTAT_RAW_REG	intstat_raw_reg	Go
0003D024h	INTSTAT_MASKED_REG	intstat_masked_reg	Go
0003D028h	INT_ENABLE_REG	int_enable_reg	Go
0003D02Ch	TS_COMP_NUDGE_REG	ts_comp_nudge_reg	Go
0003D030h	EVENT_POP_REG	event_pop_reg	Go
0003D034h	EVENT_0_REG	event_0_reg	Go
0003D038h	EVENT_1_REG	event_1_reg	Go
0003D03Ch	EVENT_2_REG	event_2_reg	Go
0003D040h	EVENT_3_REG	event_3_reg	Go
0003D044h	TS_LOAD_HIGH_VAL_REG	ts_load_high_val_reg	Go
0003D048h	TS_COMP_HIGH_VAL_REG	ts_comp_high_val_reg	Go
0003D04Ch	TS_ADD_VAL_REG	ts_add_val	Go
0003D050h	TS_PPM_LOW_VAL_REG	ts_ppm_low_val_reg	Go
0003D054h	TS_PPM_HIGH_VAL_REG	ts_ppm_high_val_reg	Go
0003D058h	TS_NUDGE_VAL_REG	ts_nudge_val_reg	Go
0003D0E0h	COMP_LOW_REG	comp_low_reg	Go
0003D0E4h	COMP_HIGH_REG	comp_high_reg	Go
0003D0E8h	CONTROL_REG	control_reg	Go
0003D0ECh	LENGTH_REG	length_reg	Go
0003D0F0h	PPM_LOW_REG	ppm_low_reg	Go
0003D0F4h	PPM_HIGH_REG	ppm_high_reg	Go
0003D0F8h	NUDGE_REG	nudge_reg	Go
0003D200h	COMP_LOW_REG	comp_low_reg	Go
0003D204h	COMP_HIGH_REG	comp_high_reg	Go
0003D208h	CONTROL_REG	control_reg	Go
0003D20Ch	LENGTH_REG	length_reg	Go

Copyright © 2025 Texas Instruments Incorporated

Table 11-297. MSS_CPSW Registers (continued)

Offset	Acronym	Register Name	Section
0003D210h	PPM_LOW_REG	ppm_low_reg	Go
0003D214h	PPM_HIGH_REG	ppm_high_reg	Go
0003D218h	NUDGE_REG	nudge_reg	Go
0003E000h	MOD_VER	Module and Version	Go
0003E004h	ALE_STATUS	ALE Status	Go
0003E008h	ALE_CONTROL	ALE Control	Go
0003E00Ch	ALE_CTRL2	ALE Control 2	Go
0003E010h	ALE_PRESCALE	ALE Prescale	Go
0003E014h	ALE_AGING_CTRL	ALE Aging Control	Go
0003E01Ch	ALE_NXT_HDR	ALE Next Header	Go
0003E020h	ALE_TBLCTL	ALE Table Control	Go
0003E034h	ALE_TBLW2	ALE LUT Table word 2	Go
0003E038h	ALE_TBLW1	ALE LUT Table word 1	Go
0003E03Ch	ALE_TBLW0	ALE LUT Table word 0	Go
0003E040h + formula	I0_ALE_PORTCTL0_y	ALE Port Control X	Go
0003E090h	ALE_UVLAN_MEMBER	ALE Unknown VLAN Member Mask Register	Go
0003E094h	ALE_UVLAN_URCAST	ALE Unknown VLAN Unregistered Multicast Flood Mask Register	Go
0003E098h	ALE_UVLAN_RMCAST	ALE Unknown VLAN Registered Multicast Flood Mask Register	Go
0003E09Ch	ALE_UVLAN_UNTAG	ALE Unknown VLAN force Untagged Egress Mask Register	Go
0003E0B8h	ALE_STAT_DIAG	ALE Statistic Output Diagnostic Register	Go
0003E0BCh	ALE_OAM_LB_CTRL	ALE OAM Loopback Control	Go
0003E0C0h	ALE_MSK_MUX0	ALE Mask Mux 0	Go
0003E0C4h + formula	I1_ALE_MSK_MUX1_y	ALE Mask Mux X	Go
0003E0FCh	EGRESSOP	Egress Operation	Go
0003E100h	POLICECFG0	Policing Config 0	Go
0003E104h	POLICECFG1	Policing Config 1	Go
0003E108h	POLICECFG2	Policing Config 2	Go
0003E10Ch	POLICECFG3	Policing Config 3	Go
0003E110h	POLICECFG4	Policing Config 4	Go
0003E118h	POLICECFG6	Policing Config 6	Go
0003E11Ch	POLICECFG7	Policing Config 7	Go
0003E120h	POLICETBLCTL	Policing Table Control	Go
0003E124h	POLICECONTROL	Policing Control	Go
0003E128h	POLICETESTCTL	Policing Test Control	Go
0003E12Ch	POLICEHSTAT	Policing Hit Status	Go
0003E134h	THREADMAPDEF	THREAD Mapping Default Value	Go
0003E138h	THREADMAPCTL	THREAD Mapping Control	Go
0003E13Ch	THREADMAPVAL	THREAD Mapping Value	Go
0003F000h	rev	Aggregator Revision Register	Go
0003F008h	vector	ECC Vector Register	Go
0003F00Ch	stat	Misc Status	Go

Copyright © 2025 Texas Instruments Incorporated

Table 11-297. MSS_CPSW Registers (continued)

Offset	Acronym	Register Name	Section
0003F010h + formula	reserved_svbus_y	Reserved Area for Serial VBUS Registers	Go
0003F03Ch	sec_eoi_reg	EOI Register	Go
0003F040h	sec_status_reg0	Interrupt Status Register 0	Go
0003F080h	sec_enable_set_reg0	Interrupt Enable Set Register 0	Go
0003F0C0h	sec_enable_clr_reg0	Interrupt Enable Clear Register 0	Go
0003F13Ch	ded_eoi_reg	EOI Register	Go
0003F140h	ded_status_reg0	Interrupt Status Register 0	Go
0003F180h	ded_enable_set_reg0	Interrupt Enable Set Register 0	Go
0003F1C0h	ded_enable_clr_reg0	Interrupt Enable Clear Register 0	Go
0003F200h	aggr_enable_set	AGGR interrupt enable set Register	Go
0003F204h	aggr_enable_clr	AGGR interrupt enable clear Register	Go
0003F208h	aggr_status_set	AGGR interrupt status set Register	Go
0003F20Ch	aggr_status_clr	AGGR interrupt status clear Register	Go

Complex bit access types are encoded to fit into small table cells. Table 11-298 shows the codes that are used for access types in this section.

Table 11-298. MSS_CPSW Access Type Codes

Access Type	Code	Description
Read Type		
R	R	Read
Write Type		
W	W	Write
W1C	W 1C	Write 1 to clear
W1S	W 1S	Write 1 to set
Wdecr	W decr	Write
Wincr	W incr	Write
Reset or Default Value		
-n		Value after reset or the default value
Register Array Variables		
i,j,k,l,m,n		When these variables are used in a register name, an offset, or an address, they refer to the value of a register array where the register is part of a group of repeating registers. The register groups form a hierarchical structure and the array is represented with a formula.
y		When this variable is used in a register name, an offset, or an address it refers to the value of a register array.

Copyright © 2025 Texas Instruments Incorporated

11.2.1.6.1 SS_IDVER_REG Register (Offset = 0h) [Reset = 6BA00102h]

SS_IDVER_REG is shown in Table 11-299.

Return to the Summary Table.

SS ID Version Register

Table 11-299. SS_IDVER_REG Register Field Descriptions

Bit	Field	Type	Reset	Description
31-16	IDENT	R	6BA0h	Identification value
15-11	RTL_VER	R	0h	RTL version value
10-8	MAJOR_VER	R	1h	Major version value
7-0	MINOR_VER	R	2h	Minor version value

Copyright © 2025 Texas Instruments Incorporated

11.2.1.6.2 SS_SYNCE_COUNT_REG Register (Offset = 4h) [Reset = 00000000h]

SS_SYNCE_COUNT_REG is shown in Table 11-300.

Return to the Summary Table.

SS SYNCE Count Register

Table 11-300. SS_SYNCE_COUNT_REG Register Field Descriptions

Bit	Field	Type	Reset	Description
31-0	SYNCE_CNT	R/W	0h	Sync E Count Value

Copyright © 2025 Texas Instruments Incorporated

11.2.1.6.3 SS_SYNCE_MUX_REG Register (Offset = 8h) [Reset = X]

SS_SYNCE_MUX_REG is shown in Table 11-301.

Return to the Summary Table.

SS Synce Mux Register

Table 11-301. SS_SYNCE_MUX_REG Register Field Descriptions

Bit	Field	Type	Reset	Description
31-6	RESERVED	R/W	X	
5-0	SYNCE_SEL	R/W	0h	Sync E Select Value

Copyright © 2025 Texas Instruments Incorporated

11.2.1.6.4 SS_CONTROL_REG Register (Offset = Ch) [Reset = X]

SS_CONTROL_REG is shown in Table 11-302.

Return to the Summary Table.

SS Control Register

Table 11-302. SS_CONTROL_REG Register Field Descriptions

Bit	Field	Type	Reset	Description
31-2	RESERVED	R/W	X	
1	EEE_PHY_ONLY	R/W	0h	Energy Efficient Enable Phy Only Mode: 0=The low power indicate state includes gating off the CPPI_GCLK to the CPSW, 1=The low power indicate state does not gate the clock to the CPSW
0	EEE_EN	R/W	0h	Energy Efficient Ethernet Enable: 0=EEE is disabled, 1=EEE is enabled

Copyright © 2025 Texas Instruments Incorporated

11.2.1.6.5 SS_INT_CONTROL_REG Register (Offset = 18h) [Reset = X]

SS_INT_CONTROL_REG is shown in Table 11-303.

Return to the Summary Table.

SS Interrupt Control Register

Table 11-303. SS_INT_CONTROL_REG Register Field Descriptions

Bit	Field	Type	Reset	Description
31	INT_TEST	R/W	0h	Interrupt Test
30-22	RESERVED	R/W	X	
21-16	INT_BYPASS	R/W	0h	Interrupt Bypass Value
15-12	RESERVED	R/W	X	
11-0	INT_PRESCALE	R/W	0h	Interrupt Prescale Value

Copyright © 2025 Texas Instruments Incorporated

11.2.1.6.6 SS_STATUS_REG Register (Offset = 1Ch) [Reset = X]

SS_STATUS_REG is shown in Table 11-304.

Return to the Summary Table.

SS Status Register

Table 11-304. SS_STATUS_REG Register Field Descriptions

Bit	Field	Type	Reset	Description
31-1	RESERVED	R	X	
0	EEE_CLKSTOP_ACK	R	0h	Energy Efficient Ethernet clockstop acknowledge from CPSW

Copyright © 2025 Texas Instruments Incorporated

11.2.1.6.7 SS_RGMII1_STATUS_REG Register (Offset = 30h) [Reset = X]

SS_RGMII1_STATUS_REG is shown in Table 11-305.

Return to the Summary Table.

RGMII1 Status Register

Table 11-305. SS_RGMII1_STATUS_REG Register Field Descriptions

Bit	Field	Type	Reset	Description
31-4	RESERVED	R	X	
3	FULLDUPLEX	R	0h	Rgmii full dulex: 0=Half-duplex, 1=Full-duplex
2-1	SPEED	R	0h	Rgmii1 speed: 00=10Mbps, 01=100Mbps, 10=1000Mbps, 11=reserved
0	LINK	R	0h	Rgmii1 link indicator: 0=Link is down, 1=Link is up

Copyright © 2025 Texas Instruments Incorporated

11.2.1.6.8 SS_TH_THRESH_PULSE_EN_REG Register (Offset = 80h) [Reset = X]

SS_TH_THRESH_PULSE_EN_REG is shown in Table 11-306.

Return to the Summary Table.

THost Threshold Pulse Interrupt Enable Register

Table 11-306. SS_TH_THRESH_PULSE_EN_REG Register Field Descriptions

Bit	Field	Type	Reset	Description
31-8	RESERVED	R/W	X	
7-0	TH_THRESH_PULSE_EN	R/W	0h	THost Threshold Pulse Interrupt Enable Register

Copyright © 2025 Texas Instruments Incorporated

11.2.1.6.9 SS_TH_PULSE_EN_REG Register (Offset = 84h) [Reset = X]

SS_TH_PULSE_EN_REG is shown in Table 11-307.

Return to the Summary Table.

THost Pulse Interrupt Enable Register

Table 11-307. SS_TH_PULSE_EN_REG Register Field Descriptions

Bit	Field	Type	Reset	Description
31-8	RESERVED	R/W	X	
7-0	TH_PULSE_EN	R/W	0h	THost Pulse Interrupt Enable Register

Copyright © 2025 Texas Instruments Incorporated

11.2.1.6.10 SS_FH_PULSE_EN_REG Register (Offset = 88h) [Reset = X]

SS_FH_PULSE_EN_REG is shown in Table 11-308.

Return to the Summary Table.

FHost Pulse Interrupt Enable Register

Table 11-308. SS_FH_PULSE_EN_REG Register Field Descriptions

Bit	Field	Type	Reset	Description
31-8	RESERVED	R/W	X	
7-0	FH_PULSE_EN	R/W	0h	FHost Pulse Interrupt Enable Register

Copyright © 2025 Texas Instruments Incorporated

11.2.1.6.11 SS_MISC_EN_REG Register (Offset = 8Ch) [Reset = X]

SS_MISC_EN_REG is shown in Table 11-309.

Return to the Summary Table.

Misc Interrupt Enable Register

Table 11-309. SS_MISC_EN_REG Register Field Descriptions

Bit	Field	Type	Reset	Description
31-7	RESERVED	R/W	X	
6	DED_PEND_EN	R/W	0h	MISC DED Memory Protect Error Interrupt Enable
5	SEC_PEND_EN	R/W	0h	MISC SEC Memory Protect Error Interrupt Enable
4	EVNT_PEND_EN	R/W	0h	MISC CPTS Event Interrupt Enable
3	STAT_PEND_EN	R/W	0h	MISC Statistics Interrupt Enable - OR of bits n downto 0
2	HOST_PEND_EN	R/W	0h	MISC Host Interrupt Enable
1	MDIO_LINKINT_EN	R/W	0h	MISC MDIO linkint - OR of bits 1 and 0
0	MDIO_USERINT_EN	R/W	0h	MISC_MDIO userint interrupt enable - OR of bits 1 and 0

Copyright © 2025 Texas Instruments Incorporated

11.2.1.6.12 SS_TH_THRESH_PULSE_STATUS_REG Register (Offset = B0h) [Reset = X]

SS_TH_THRESH_PULSE_STATUS_REG is shown in Table 11-310.

Return to the Summary Table.

THost Threshold Pulse Interrupt Status Register

Table 11-310. SS_TH_THRESH_PULSE_STATUS_REG Register Field Descriptions

Bit	Field	Type	Reset	Description
31-8	RESERVED	R	X	
7-0	TH_THRESH_PULSE_STATUS	R	0h	THost Threshold Pulse Interrupt Status Register

Copyright © 2025 Texas Instruments Incorporated

11.2.1.6.13 SS_TH_PULSE_STATUS_REG Register (Offset = B4h) [Reset = X]

SS_TH_PULSE_STATUS_REG is shown in Table 11-311.

Return to the Summary Table.

THost Pulse Interrupt Status Register

Table 11-311. SS_TH_PULSE_STATUS_REG Register Field Descriptions

Bit	Field	Type	Reset	Description
31-8	RESERVED	R	X	
7-0	TH_PULSE_STATUS	R	0h	THost Pulse Interrupt Status Register

Copyright © 2025 Texas Instruments Incorporated

11.2.1.6.14 SS_FH_PULSE_STATUS_REG Register (Offset = B8h) [Reset = X]

SS_FH_PULSE_STATUS_REG is shown in Table 11-312.

Return to the Summary Table.

FHost Pulse Interrupt Status Register

Table 11-312. SS_FH_PULSE_STATUS_REG Register Field Descriptions

Bit	Field	Type	Reset	Description
31-8	RESERVED	R	X	
7-0	FH_PULSE_STATUS	R	0h	FHost Pulse Interrupt Status Register

Copyright © 2025 Texas Instruments Incorporated

11.2.1.6.15 SS_MISC_STATUS_REG Register (Offset = BCh) [Reset = X]

SS_MISC_STATUS_REG is shown in Table 11-313.

Return to the Summary Table.

Misc Interrupt Status Register - Set bits in this register indicate that an enabled interrupt is asserted

Table 11-313. SS_MISC_STATUS_REG Register Field Descriptions

Bit	Field	Type	Reset	Description
31-7	RESERVED	R/W	X	
6	DED_PEND	R/W	0h	MISC DED Memory Protect Error Interrupt
5	SEC_PEND	R/W	0h	MISC SEC Memory Protect Error Interrupt
4	EVNT_PEND	R/W	0h	MISC CPTS Event Interrupt
3	STAT_PEND	R/W	0h	MISC Statistics Interrupt - OR of bits n downto 0
2	HOST_PEND	R/W	0h	MISC Host Interrupt Enable
1	MDIO_LINKINT	R/W	0h	MISC MDIO linkint - OR of bits 1 and 0
0	MDIO_USERINT	R/W	0h	MISC_MDIO userint interrupt - OR of bits 1 and 0

Copyright © 2025 Texas Instruments Incorporated

11.2.1.6.16 SS_TH_IMAX_REG Register (Offset = E0h) [Reset = X]

SS_TH_IMAX_REG is shown in Table 11-314.

Return to the Summary Table.

THost Interrupt Max Register Register

Table 11-314. SS_TH_IMAX_REG Register Field Descriptions

Bit	Field	Type	Reset	Description
31-6	RESERVED	R/W	X	
5-0	TH_IMAX	R/W	0h	THost Interrupt Max Register Register

Copyright © 2025 Texas Instruments Incorporated

11.2.1.6.17 SS_FH_IMAX_REG Register (Offset = E4h) [Reset = X]

SS_FH_IMAX_REG is shown in Table 11-315.

Return to the Summary Table.

FHost Interrupt Max Register Register

Table 11-315. SS_FH_IMAX_REG Register Field Descriptions

Bit	Field	Type	Reset	Description
31-6	RESERVED	R/W	X	
5-0	FH_IMAX	R/W	0h	FHost Interrupt Max Register Register

Copyright © 2025 Texas Instruments Incorporated

11.2.1.6.18 MDIO_VERSION_REG Register (Offset = F00h) [Reset = 00070907h]

MDIO_VERSION_REG is shown in Table 11-316.

Return to the Summary Table.

MDIO Version Register

Table 11-316. MDIO_VERSION_REG Register Field Descriptions

Bit	Field	Type	Reset	Description
31-30	scheme	R	0h	Scheme
29-28	bu	R	0h	bu
27-16	module_id	R	7h	Module ID
15-11	revrtl	R	1h	RTL version
10-8	revmaj	R	1h	Major version
7-6	custom	R	0h	Custom version
5-0	revmin	R	7h	Minor version

Copyright © 2025 Texas Instruments Incorporated

11.2.1.6.19 CONTROL_REG Register (Offset = F04h) [Reset = X]

CONTROL_REG is shown in Table 11-317.

Return to the Summary Table.

MDIO Control Register

Table 11-317. CONTROL_REG Register Field Descriptions

Bit	Field	Type	Reset	Description
31	IDLE	R	1h	MDIO state machine idle
30	ENABLE	R/W	0h	Enable control
29	RESERVED	R/W	X	
28-24	HIGHEST_USER_CHANNEL	R	1h	Highest user channel
23-21	RESERVED	R/W	X	
20	PREAMBLE	R/W	0h	Preamble disable
19	FAULT	R/W	0h	Fault indicator
18	FAULT_DETECT_ENABLE	R/W	0h	Fault detect enable
17	INT_TEST_ENABLE	R/W	0h	Interrupt test enable
16	RESERVED	R/W	X	
15-0	CLKDIV	R/W	FFh	Clock divider

Copyright © 2025 Texas Instruments Incorporated

11.2.1.6.20 ALIVE_REG Register (Offset = F08h) [Reset = 00000000h]

ALIVE_REG is shown in Table 11-318.

Return to the Summary Table.

MDIO Alive Register

Table 11-318. ALIVE_REG Register Field Descriptions

Bit	Field	Type	Reset	Description
31-0	ALIVE	R/W	0h	MDIO alive

Copyright © 2025 Texas Instruments Incorporated

11.2.1.6.21 LINK_REG Register (Offset = F0Ch) [Reset = 00000000h]

LINK_REG is shown in Table 11-319.

Return to the Summary Table.

MDIO Link Register

Table 11-319. LINK_REG Register Field Descriptions

Bit	Field	Type	Reset	Description
31-0	LINK	R	0h	MDIO link state

Copyright © 2025 Texas Instruments Incorporated

11.2.1.6.22 LINK_INT_RAW_REG Register (Offset = F10h) [Reset = X]

LINK_INT_RAW_REG is shown in Table 11-320.

Return to the Summary Table.

MDIO Link Interrupt Raw Register

Table 11-320. LINK_INT_RAW_REG Register Field Descriptions

Bit	Field	Type	Reset	Description
31-2	RESERVED	R/W	X	
1-0	LINKINTRAW	R/W	0h	MDIO link change event raw value

Copyright © 2025 Texas Instruments Incorporated

11.2.1.6.23 LINK_INT_MASKED_REG Register (Offset = F14h) [Reset = X]

LINK_INT_MASKED_REG is shown in Table 11-321.

Return to the Summary Table.

MDIO Link Interrupt Masked Register

Table 11-321. LINK_INT_MASKED_REG Register Field Descriptions

Bit	Field	Type	Reset	Description
31-2	RESERVED	R/W	X	
1-0	LINKINTMASKED	R/W	0h	MDIO link change interrupt masked value

Copyright © 2025 Texas Instruments Incorporated

11.2.1.6.24 LINK_INT_MASK_SET_REG Register (Offset = F18h) [Reset = X]

LINK_INT_MASK_SET_REG is shown in Table 11-322.

Return to the Summary Table.

MDIO Link Interrupt Mask Set Register

Table 11-322. LINK_INT_MASK_SET_REG Register Field Descriptions

Bit	Field	Type	Reset	Description
31-1	RESERVED	R/W	X	
0	LINKINTMASKSET	R/W	0h	MDIO link interrupt mask set

Copyright © 2025 Texas Instruments Incorporated

11.2.1.6.25 LINK_INT_MASK_CLEAR_REG Register (Offset = F1Ch) [Reset = X]

LINK_INT_MASK_CLEAR_REG is shown in Table 11-323.

Return to the Summary Table.

MDIO Link Interrupt Mask Clear Register

Table 11-323. LINK_INT_MASK_CLEAR_REG Register Field Descriptions

Bit	Field	Type	Reset	Description
31-1	RESERVED	R/W	X	
0	LINKINTMASKCLR	R/W	0h	MDIO link interrupt mask clear

Copyright © 2025 Texas Instruments Incorporated

11.2.1.6.26 USER_INT_RAW_REG Register (Offset = F20h) [Reset = X]

USER_INT_RAW_REG is shown in Table 11-324.

Return to the Summary Table.

MDIO User Interrupt Raw Register

Table 11-324. USER_INT_RAW_REG Register Field Descriptions

Bit	Field	Type	Reset	Description
31-2	RESERVED	R/W	X	
1-0	USERINTRAW	R/W	0h	User interrupt raw

Copyright © 2025 Texas Instruments Incorporated

11.2.1.6.27 USER_INT_MASKED_REG Register (Offset = F24h) [Reset = X]

USER_INT_MASKED_REG is shown in Table 11-325.

Return to the Summary Table.

MDIO User Interrupt Masked Register

Table 11-325. USER_INT_MASKED_REG Register Field Descriptions

Bit	Field	Type	Reset	Description
31-2	RESERVED	R/W	X	
1-0	USERINTMASKED	R/W	0h	User interrupt masked

Copyright © 2025 Texas Instruments Incorporated

11.2.1.6.28 USER_INT_MASK_SET_REG Register (Offset = F28h) [Reset = X]

USER_INT_MASK_SET_REG is shown in Table 11-326.

Return to the Summary Table.

MDIO User Interrupt Mask Set Register

Table 11-326. USER_INT_MASK_SET_REG Register Field Descriptions

Bit	Field	Type	Reset	Description
31-2	RESERVED	R/W	X	
1-0	USERINTMASKSET	R/W	0h	MDIO user interrupt mask set

Copyright © 2025 Texas Instruments Incorporated

11.2.1.6.29 USER_INT_MASK_CLEAR_REG Register (Offset = F2Ch) [Reset = X]

USER_INT_MASK_CLEAR_REG is shown in Table 11-327.

Return to the Summary Table.

MDIO User Interrupt Mask Clear Register

Table 11-327. USER_INT_MASK_CLEAR_REG Register Field Descriptions

Bit	Field	Type	Reset	Description
31-2	RESERVED	R/W	X	
1-0	USERINTMASKCLR	R/W	0h	MDIO user interrupt mask clear

Copyright © 2025 Texas Instruments Incorporated

11.2.1.6.30 MANUAL_IF_REG Register (Offset = F30h) [Reset = X]

MANUAL_IF_REG is shown in Table 11-328.

Return to the Summary Table.

MDIO Manual Interface Register

Table 11-328. MANUAL_IF_REG Register Field Descriptions

Bit	Field	Type	Reset	Description
31-3	RESERVED	R/W	X	
2	mdio_mdclk_o	R/W	0h	MDIO Clock Output
1	mdio_oe	R/W	0h	MDIO Output Enable
0	mdio_pin	R/W	0h	MDIO Pin

Copyright © 2025 Texas Instruments Incorporated

11.2.1.6.31 POLL_REG Register (Offset = F34h) [Reset = X]

POLL_REG is shown in Table 11-329.

Return to the Summary Table.

MDIO Poll Register

Table 11-329. POLL_REG Register Field Descriptions

Bit	Field	Type	Reset	Description
31	manualmode	R/W	0h	MDIO Manual Mode
30	statechangemode	R/W	0h	MDIO State Change Mode
29-8	RESERVED	R/W	X	
7-0	ipg	R/W	0h	MDIO IPG

Copyright © 2025 Texas Instruments Incorporated

11.2.1.6.32 POLL_EN_REG Register (Offset = F38h) [Reset = FFFFFFFFh]

POLL_EN_REG is shown in Table 11-330.

Return to the Summary Table.

MDIO Poll Enable Register

Table 11-330. POLL_EN_REG Register Field Descriptions

Bit	Field	Type	Reset	Description
31-0	poll_en	R/W	FFFFFFFFh	MDIO Poll Enable

Copyright © 2025 Texas Instruments Incorporated

11.2.1.6.33 CLAUS45_REG Register (Offset = F3Ch) [Reset = 00000000h]

CLAUS45_REG is shown in Table 11-331.

Return to the Summary Table.

MDIO Clause45 Register

Table 11-331. CLAUS45_REG Register Field Descriptions

Bit	Field	Type	Reset	Description
31-0	clause45	R/W	0h	MDIO Clause 45

Copyright © 2025 Texas Instruments Incorporated

11.2.1.6.34 USER_ADDR0_REG Register (Offset = F40h) [Reset = X]

USER_ADDR0_REG is shown in Table 11-332.

Return to the Summary Table.

MDIO Address 0 Register

Table 11-332. USER_ADDR0_REG Register Field Descriptions

Bit	Field	Type	Reset	Description
31-16	RESERVED	R/W	X	
15-0	user_addr0	R/W	0h	MDIO USER Address 0

Copyright © 2025 Texas Instruments Incorporated

11.2.1.6.35 USER_ADDR1_REG Register (Offset = F44h) [Reset = X]

USER_ADDR1_REG is shown in Table 11-333.

Return to the Summary Table.

MDIO Address 1 Register

Table 11-333. USER_ADDR1_REG Register Field Descriptions

Bit	Field	Type	Reset	Description
31-16	RESERVED	R/W	X	
15-0	user_addr1	R/W	0h	MDIO USER Address 1

Copyright © 2025 Texas Instruments Incorporated

11.2.1.6.36 USER_ACCESS_REG Register (Offset = F80h) [Reset = X]

USER_ACCESS_REG is shown in Table 11-334.

Return to the Summary Table.

MDIO User Access Register

Table 11-334. USER_ACCESS_REG Register Field Descriptions

Bit	Field	Type	Reset	Description
31	GO	R/W	0h	Go
30	WRITE	R/W	0h	Write
29	ACK	R/W	0h	Acknowledge
28-26	RESERVED	R/W	X	
25-21	REGADR	R/W	0h	Register address
20-16	PHYADR	R/W	0h	PHY address
15-0	DATA	R/W	0h	User data

Copyright © 2025 Texas Instruments Incorporated

11.2.1.6.37 USER_PHY_SEL_REG Register (Offset = F84h) [Reset = X]

USER_PHY_SEL_REG is shown in Table 11-335.

Return to the Summary Table.

MDIO User PHY Select Register

Table 11-335. USER_PHY_SEL_REG Register Field Descriptions

Bit	Field	Type	Reset	Description
31-8	RESERVED	R/W	X	
7	LINKSEL	R/W	0h	Link status determination select
6	LINKINT_ENABLE	R/W	0h	Link change interrupt enable
5	RESERVED	R/W	X	
4-0	PHYADR_MON	R/W	0h	PHY address whose link status is monitored

Copyright © 2025 Texas Instruments Incorporated

11.2.1.6.38 CPSW_ID_VER_REG Register (Offset = 00020000h) [Reset = 6B900101h]

CPSW_ID_VER_REG is shown in Table 11-336.

Return to the Summary Table.

CPSW ID Version

Table 11-336. CPSW_ID_VER_REG Register Field Descriptions

Bit	Field	Type	Reset	Description
31-16	IDENT	R	6B90h	Identification Value
15-11	RTL_VER	R	0h	RTL Version Value
10-8	MAJOR_VER	R	1h	Major Version Value
7-6	CUSTOM_VER	R	0h	Custom Version Value
5-0	MINOR_VER	R	1h	Minor Version Value

Copyright © 2025 Texas Instruments Incorporated

11.2.1.6.39 CONTROL_REG Register (Offset = 00020004h) [Reset = X]

CONTROL_REG is shown in Table 11-317.

Return to the Summary Table.

CPSW Switch Control

Table 11-337. CONTROL_REG Register Field Descriptions

Bit	Field	Type	Reset	Description
31	ECC_CRC_MODE	R/W	0h	ECC CRC Mode
30-19	RESERVED	R/W	X	
18	EST_ENABLE	R/W	0h	Intersperced Express Traffic enable
17	UNUSED	R/W	0h	Unused
16	EEE_ENABLE	R/W	0h	Energy Efficient Ethernet enable
15	P0_RX_PASS_CRC_ERR	R/W	0h	Port 0 Pass Received CRC errors
14	P0_RX_PAD	R/W	0h	Port 0 Receive Short Packet Pad
13	P0_TX_CRC_REMOVE	R/W	0h	Port 0 Transmit CRC remove
12	RESERVED	R/W	X	
11	P8_PASS_PRI_TAGGED	R/W	0h	Port 8 Pass Priority Tagged
10	P7_PASS_PRI_TAGGED	R/W	0h	Port 7 Pass Priority Tagged
9	P6_PASS_PRI_TAGGED	R/W	0h	Port 6 Pass Priority Tagged
8	P5_PASS_PRI_TAGGED	R/W	0h	Port 5 Pass Priority Tagged
7	P4_PASS_PRI_TAGGED	R/W	0h	Port 4 Pass Priority Tagged
6	P3_PASS_PRI_TAGGED	R/W	0h	Port 3 Pass Priority Tagged
5	P2_PASS_PRI_TAGGED	R/W	0h	Port 2 Pass Priority Tagged
4	P1_PASS_PRI_TAGGED	R/W	0h	Port 1 Pass Priority Tagged
3	P0_PASS_PRI_TAGGED	R/W	0h	Port 0 Pass Priority Tagged
2	P0_ENABLE	R/W	0h	Port 0 Enable
1	VLAN_AWARE	R/W	0h	VLAN Aware Mode
0	S_CN_SWITCH	R/W	0h	VLAN Aware Mode

Copyright © 2025 Texas Instruments Incorporated

11.2.1.6.40 EM_CONTROL_REG Register (Offset = 00020010h) [Reset = X]

EM_CONTROL_REG is shown in Table 11-338.

Return to the Summary Table.

CPSW Emulation Control

Table 11-338. EM_CONTROL_REG Register Field Descriptions

Bit	Field	Type	Reset	Description
31-2	RESERVED	R/W	X	
1	SOFT	R/W	0h	Emulation Soft Bit
0	FREE	R/W	0h	Emulation Free Bit

Copyright © 2025 Texas Instruments Incorporated

11.2.1.6.41 STAT_PORT_EN_REG Register (Offset = 00020014h) [Reset = X]

STAT_PORT_EN_REG is shown in Table 11-339.

Return to the Summary Table.

CPSW Statistics Port Enable

Table 11-339. STAT_PORT_EN_REG Register Field Descriptions

Bit	Field	Type	Reset	Description
31-9	RESERVED	R/W	X	
8	P8_STAT_EN	R/W	0h	Port 8 Statistics Enable
7	P7_STAT_EN	R/W	0h	Port 7 Statistics Enable
6	P6_STAT_EN	R/W	0h	Port 6 Statistics Enable
5	P5_STAT_EN	R/W	0h	Port 5 Statistics Enable
4	P4_STAT_EN	R/W	0h	Port 4 Statistics Enable
3	P3_STAT_EN	R/W	0h	Port 3 Statistics Enable
2	P2_STAT_EN	R/W	0h	Port 2 Statistics Enable
1	P1_STAT_EN	R/W	0h	Port 1 Statistics Enable
0	P0_STAT_EN	R/W	0h	Port 0 Statistics Enable

Copyright © 2025 Texas Instruments Incorporated

11.2.1.6.42 PTYPE_REG Register (Offset = 00020018h) [Reset = X]

PTYPE_REG is shown in Table 11-340.

Return to the Summary Table.

CPSW Transmit Priority Type

Table 11-340. PTYPE_REG Register Field Descriptions

Bit	Field	Type	Reset	Description
31-17	RESERVED	R/W	X	
16	P8_PTYPE_ESC	R/W	0h	Port 8 Priority Type Escalate
15	P7_PTYPE_ESC	R/W	0h	Port 7 Priority Type Escalate
14	P6_PTYPE_ESC	R/W	0h	Port 6 Priority Type Escalate
13	P5_PTYPE_ESC	R/W	0h	Port 5 Priority Type Escalate
12	P4_PTYPE_ESC	R/W	0h	Port 4 Priority Type Escalate
11	P3_PTYPE_ESC	R/W	0h	Port 3 Priority Type Escalate
10	P2_PTYPE_ESC	R/W	0h	Port 2 Priority Type Escalate
9	P1_PTYPE_ESC	R/W	0h	Port 1 Priority Type Escalate
8	P0_PTYPE_ESC	R/W	0h	Port 0 Priority Type Escalate
7-5	RESERVED	R/W	X	
4-0	ESC_PRI_LD_VAL	R/W	0h	Escalate Priority Load Value

Copyright © 2025 Texas Instruments Incorporated

11.2.1.6.43 SOFT_IDLE_REG Register (Offset = 0002001Ch) [Reset = X]

SOFT_IDLE_REG is shown in Table 11-341.

Return to the Summary Table.

CPSW Software Idle

Table 11-341. SOFT_IDLE_REG Register Field Descriptions

Bit	Field	Type	Reset	Description
31-1	RESERVED	R/W	X	
0	SOFT_IDLE	R/W	0h	Software Idle

Copyright © 2025 Texas Instruments Incorporated

11.2.1.6.44 THRU_RATE_REG Register (Offset = 00020020h) [Reset = X]

THRU_RATE_REG is shown in Table 11-342.

Return to the Summary Table.

CPSW Thru Rate

Table 11-342. THRU_RATE_REG Register Field Descriptions

Bit	Field	Type	Reset	Description
31-16	RESERVED	R/W	X	
15-12	SL_RX_THRU_RATE	R/W	3h	Switch FIFO receive through rate
11-4	RESERVED	R/W	X	
3-0	P0_RX_THRU_RATE	R/W	1h	CPPI FIFO receive through rate

Copyright © 2025 Texas Instruments Incorporated

11.2.1.6.45 GAP_THRESH_REG Register (Offset = 00020024h) [Reset = X]

GAP_THRESH_REG is shown in Table 11-343.

Return to the Summary Table.

CPSW Transmit FIFO Short Gap Threshold

Table 11-343. GAP_THRESH_REG Register Field Descriptions

Bit	Field	Type	Reset	Description
31-5	RESERVED	R/W	X	
4-0	GAP_THRESH	R/W	Bh	Short Gap Threshold

Copyright © 2025 Texas Instruments Incorporated

11.2.1.6.46 TX_START_WDS_REG Register (Offset = 00020028h) [Reset = X]

TX_START_WDS_REG is shown in Table 11-344.

Return to the Summary Table.

CPSW Transmit FIFO Start Words

Table 11-344. TX_START_WDS_REG Register Field Descriptions

Bit	Field	Type	Reset	Description
31-11	RESERVED	R/W	X	
10-0	TX_START_WDS	R/W	8h	FIFO Packet Transmit Start Words

Copyright © 2025 Texas Instruments Incorporated

11.2.1.6.47 EEE_PRESCALE_REG Register (Offset = 0002002Ch) [Reset = X]

EEE_PRESCALE_REG is shown in Table 11-345.

Return to the Summary Table.

CPSW Energy Efficient Ethernet Prescale Value

Table 11-345. EEE_PRESCALE_REG Register Field Descriptions

Bit	Field	Type	Reset	Description
31-12	RESERVED	R/W	X	
11-0	EEE_PRESCALE	R/W	0h	Energy Efficient Ethernet Pre-scale count load value

Copyright © 2025 Texas Instruments Incorporated

11.2.1.6.48 TX_G_OFLOW_THRESH_SET_REG Register (Offset = 00020030h) [Reset = FFFFFFFFh]

TX_G_OFLOW_THRESH_SET_REG is shown in Table 11-346.

Return to the Summary Table.

CPSW PFC Tx Global Out Flow Threshold Set

Table 11-346. TX_G_OFLOW_THRESH_SET_REG Register Field Descriptions

Bit	Field	Type	Reset	Description
31-28	PRI7	R/W	Fh	Priority Based Flow Control Global Outflow Usage Threshold for Pri 7
27-24	PRI6	R/W	Fh	Priority Based Flow Control Global Outflow Usage Threshold for Pri 6
23-20	PRI5	R/W	Fh	Priority Based Flow Control Global Outflow Usage Threshold for Pri 5
19-16	PRI4	R/W	Fh	Priority Based Flow Control Global Outflow Usage Threshold for Pri 4
15-12	PRI3	R/W	Fh	Priority Based Flow Control Global Outflow Usage Threshold for Pri 3
11-8	PRI2	R/W	Fh	Priority Based Flow Control Global Outflow Usage Threshold for Pri 2
7-4	PRI1	R/W	Fh	Priority Based Flow Control Global Outflow Usage Threshold for Pri 1
3-0	PRI0	R/W	Fh	Priority Based Flow Control Global Outflow Usage Threshold for Pri 0

Copyright © 2025 Texas Instruments Incorporated

11.2.1.6.49 TX_G_OFLOW_THRESH_CLR_REG Register (Offset = 00020034h) [Reset = 00000000h]

TX_G_OFLOW_THRESH_CLR_REG is shown in Table 11-347.

Return to the Summary Table.

CPSW PFC Tx Global Out Flow Threshold Clear

Table 11-347. TX_G_OFLOW_THRESH_CLR_REG Register Field Descriptions

Bit	Field	Type	Reset	Description
31-28	PRI7	R/W	0h	Priority Based Flow Control Global Outflow Usage Threshold for Pri 7
27-24	PRI6	R/W	0h	Priority Based Flow Control Global Outflow Usage Threshold for Pri 6
23-20	PRI5	R/W	0h	Priority Based Flow Control Global Outflow Usage Threshold for Pri 5
19-16	PRI4	R/W	0h	Priority Based Flow Control Global Outflow Usage Threshold for Pri 4
15-12	PRI3	R/W	0h	Priority Based Flow Control Global Outflow Usage Threshold for Pri 3
11-8	PRI2	R/W	0h	Priority Based Flow Control Global Outflow Usage Threshold for Pri 2
7-4	PRI1	R/W	0h	Priority Based Flow Control Global Outflow Usage Threshold for Pri 1
3-0	PRI0	R/W	0h	Priority Based Flow Control Global Outflow Usage Threshold for Pri 0

Copyright © 2025 Texas Instruments Incorporated

11.2.1.6.50 TX_G_BUF_THRESH_SET_L_REG Register (Offset = 00020038h) [Reset = FFFFFFFFh]

TX_G_BUF_THRESH_SET_L_REG is shown in Table 11-348.

Return to the Summary Table.

CPSW PFC Global Tx Buffer Threshold Set Low

Table 11-348. TX_G_BUF_THRESH_SET_L_REG Register Field Descriptions

Bit	Field	Type	Reset	Description
31-24	PRI3	R/W	FFh	Priority Based Flow Control Global Buffer Usage Threshold for Priority 3
23-16	PRI2	R/W	FFh	Priority Based Flow Control Global Buffer Usage Threshold for Priority 2
15-8	PRI1	R/W	FFh	Priority Based Flow Control Global Buffer Usage Threshold for Priority 1
7-0	PRI0	R/W	FFh	Priority Based Flow Control Global Buffer Usage Threshold for Priority 0

Copyright © 2025 Texas Instruments Incorporated

11.2.1.6.51 TX_G_BUF_THRESH_SET_H_REG Register (Offset = 0002003Ch) [Reset = FFFFFFFFh]

TX_G_BUF_THRESH_SET_H_REG is shown in Table 11-349.

Return to the Summary Table.

CPSW PFC Global Tx Buffer Threshold Set High

Table 11-349. TX_G_BUF_THRESH_SET_H_REG Register Field Descriptions

Bit	Field	Type	Reset	Description
31-24	PRI7	R/W	FFh	Priority Based Flow Control Global Buffer Usage Threshold for Priority 7
23-16	PRI6	R/W	FFh	Priority Based Flow Control Global Buffer Usage Threshold for Priority 6
15-8	PRI5	R/W	FFh	Priority Based Flow Control Global Buffer Usage Threshold for Priority 5
7-0	PRI4	R/W	FFh	Priority Based Flow Control Global Buffer Usage Threshold for Priority 4

Copyright © 2025 Texas Instruments Incorporated

11.2.1.6.52 TX_G_BUF_THRESH_CLR_L_REG Register (Offset = 00020040h) [Reset = 00000000h]

TX_G_BUF_THRESH_CLR_L_REG is shown in Table 11-350.

Return to the Summary Table.

CPSW PFC Global Tx Buffer Threshold Clear Low

Table 11-350. TX_G_BUF_THRESH_CLR_L_REG Register Field Descriptions

Bit	Field	Type	Reset	Description
31-24	PRI3	R/W	0h	Priority Based Flow Control Global Buffer Usage Threshold for Priority 3
23-16	PRI2	R/W	0h	Priority Based Flow Control Global Buffer Usage Threshold for Priority 2
15-8	PRI1	R/W	0h	Priority Based Flow Control Global Buffer Usage Threshold for Priority 1
7-0	PRI0	R/W	0h	Priority Based Flow Control Global Buffer Usage Threshold for Priority 0

Copyright © 2025 Texas Instruments Incorporated

11.2.1.6.53 TX_G_BUF_THRESH_CLR_H_REG Register (Offset = 00020044h) [Reset = 00000000h]

TX_G_BUF_THRESH_CLR_H_REG is shown in Table 11-351.

Return to the Summary Table.

CPSW PFC Global Tx Buffer Threshold Clear High

Table 11-351. TX_G_BUF_THRESH_CLR_H_REG Register Field Descriptions

Bit	Field	Type	Reset	Description
31-24	PRI7	R/W	0h	Priority Based Flow Control Global Buffer Usage Threshold for Priority 7
23-16	PRI6	R/W	0h	Priority Based Flow Control Global Buffer Usage Threshold for Priority 6
15-8	PRI5	R/W	0h	Priority Based Flow Control Global Buffer Usage Threshold for Priority 5
7-0	PRI4	R/W	0h	Priority Based Flow Control Global Buffer Usage Threshold for Priority 4

Copyright © 2025 Texas Instruments Incorporated

11.2.1.6.54 VLAN_LTYPE_REG Register (Offset = 00020050h) [Reset = 88A88100h]

VLAN_LTYPE_REG is shown in Table 11-352.

Return to the Summary Table.

VLAN Length/type

Table 11-352. VLAN_LTYPE_REG Register Field Descriptions

Bit	Field	Type	Reset	Description
31-16	VLAN_LTYPE_OUTER	R/W	88A8h	Outer VLAN LType
15-0	VLAN_LTYPE_INNER	R/W	8100h	Inner VLAN LType

Copyright © 2025 Texas Instruments Incorporated

11.2.1.6.55 EST_TS_DOMAIN_REG Register (Offset = 00020054h) [Reset = X]

EST_TS_DOMAIN_REG is shown in Table 11-353.

Return to the Summary Table.

Enhanced Scheduled Traffic Host Event Domain

Table 11-353. EST_TS_DOMAIN_REG Register Field Descriptions

Bit	Field	Type	Reset	Description
31-8	RESERVED	R/W	X	
7-0	EST_TS_DOMAIN	R/W	0h	Enhanced Scheduled Traffic Host Event Domain

Copyright © 2025 Texas Instruments Incorporated

11.2.1.6.56 TX_PRI0_MAXLEN_REG Register (Offset = 00020100h) [Reset = X]

TX_PRI0_MAXLEN_REG is shown in Table 11-354.

Return to the Summary Table.

Transmit Priority 0 Maximum Length

Table 11-354. TX_PRI0_MAXLEN_REG Register Field Descriptions

Bit	Field	Type	Reset	Description
31-14	RESERVED	R/W	X	
13-0	TX_PRI0_MAXLEN	R/W	7E8h	Transmit Priority 0 Maximum Length

Copyright © 2025 Texas Instruments Incorporated

11.2.1.6.57 TX_PRI1_MAXLEN_REG Register (Offset = 00020104h) [Reset = X]

TX_PRI1_MAXLEN_REG is shown in Table 11-355.

Return to the Summary Table.

Transmit Priority 1 Maximum Length

Table 11-355. TX_PRI1_MAXLEN_REG Register Field Descriptions

Bit	Field	Type	Reset	Description
31-14	RESERVED	R/W	X	
13-0	TX_PRI1_MAXLEN	R/W	7E8h	Transmit Priority 1 Maximum Length

Copyright © 2025 Texas Instruments Incorporated

11.2.1.6.58 TX_PRI2_MAXLEN_REG Register (Offset = 00020108h) [Reset = X]

TX_PRI2_MAXLEN_REG is shown in Table 11-356.

Return to the Summary Table.

Transmit Priority 2 Maximum Length

Table 11-356. TX_PRI2_MAXLEN_REG Register Field Descriptions

Bit	Field	Type	Reset	Description
31-14	RESERVED	R/W	X	
13-0	TX_PRI2_MAXLEN	R/W	7E8h	Transmit Priority 2 Maximum Length

Copyright © 2025 Texas Instruments Incorporated

11.2.1.6.59 TX_PRI3_MAXLEN_REG Register (Offset = 0002010Ch) [Reset = X]

TX_PRI3_MAXLEN_REG is shown in Table 11-357.

Return to the Summary Table.

Transmit Priority 3 Maximum Length

Table 11-357. TX_PRI3_MAXLEN_REG Register Field Descriptions

Bit	Field	Type	Reset	Description
31-14	RESERVED	R/W	X	
13-0	TX_PRI3_MAXLEN	R/W	7E8h	Transmit Priority 3 Maximum Length

Copyright © 2025 Texas Instruments Incorporated

11.2.1.6.60 TX_PRI4_MAXLEN_REG Register (Offset = 00020110h) [Reset = X]

TX_PRI4_MAXLEN_REG is shown in Table 11-358.

Return to the Summary Table.

Transmit Priority 4 Maximum Length

Table 11-358. TX_PRI4_MAXLEN_REG Register Field Descriptions

Bit	Field	Type	Reset	Description
31-14	RESERVED	R/W	X	
13-0	TX_PRI4_MAXLEN	R/W	7E8h	Transmit Priority 4 Maximum Length

Copyright © 2025 Texas Instruments Incorporated

11.2.1.6.61 TX_PRI5_MAXLEN_REG Register (Offset = 00020114h) [Reset = X]

TX_PRI5_MAXLEN_REG is shown in Table 11-359.

Return to the Summary Table.

Transmit Priority 5 Maximum Length

Table 11-359. TX_PRI5_MAXLEN_REG Register Field Descriptions

Bit	Field	Type	Reset	Description
31-14	RESERVED	R/W	X	
13-0	TX_PRI5_MAXLEN	R/W	7E8h	Transmit Priority 5 Maximum Length

Copyright © 2025 Texas Instruments Incorporated

11.2.1.6.62 TX_PRI6_MAXLEN_REG Register (Offset = 00020118h) [Reset = X]

TX_PRI6_MAXLEN_REG is shown in Table 11-360.

Return to the Summary Table.

Transmit Priority 6 Maximum Length

Table 11-360. TX_PRI6_MAXLEN_REG Register Field Descriptions

Bit	Field	Type	Reset	Description
31-14	RESERVED	R/W	X	
13-0	TX_PRI6_MAXLEN	R/W	7E8h	Transmit Priority 6 Maximum Length

Copyright © 2025 Texas Instruments Incorporated

11.2.1.6.63 TX_PRI7_MAXLEN_REG Register (Offset = 0002011Ch) [Reset = X]

TX_PRI7_MAXLEN_REG is shown in Table 11-361.

Return to the Summary Table.

Transmit Priority 7 Maximum Length

Table 11-361. TX_PRI7_MAXLEN_REG Register Field Descriptions

Bit	Field	Type	Reset	Description
31-14	RESERVED	R/W	X	
13-0	TX_PRI7_MAXLEN	R/W	7E8h	Transmit Priority 7 Maximum Length

Copyright © 2025 Texas Instruments Incorporated

11.2.1.6.64 P0_CONTROL_REG Register (Offset = 00021004h) [Reset = X]

P0_CONTROL_REG is shown in Table 11-362.

Return to the Summary Table.

CPPI Port 0 Control

Table 11-362. P0_CONTROL_REG Register Field Descriptions

Bit	Field	Type	Reset	Description
31-19	RESERVED	R/W	X	
18	RX_REMAP_DSCP_V6	R/W	0h	Port 0 Remap DSCP_V6 Enable
17	RX_REMAP_DSCP_V4	R/W	0h	Port 0 Remap DSCP_V4 Enable
16	RX_REMAP_VLAN	R/W	0h	Port 0 Remap VLAN Enable
15	RX_ECC_ERR_EN	R/W	0h	Port 0 Receive ECC Error Enable
14	TX_ECC_ERR_EN	R/W	0h	Port 0 Transmit ECC Error Enable
13-3	RESERVED	R/W	X	
2	DSCP_IPV6_EN	R/W	0h	Port 0 IPv6 DSCP enable
1	DSCP_IPV4_EN	R/W	0h	Port 0 IPv4 DSCP enable
0	RX_CHECKSUM_EN	R/W	0h	Port 0 Receive Checksum Enable

Copyright © 2025 Texas Instruments Incorporated

11.2.1.6.65 P0_FLOW_ID_OFFSET_REG Register (Offset = 00021008h) [Reset = X]

P0_FLOW_ID_OFFSET_REG is shown in Table 11-363.

Return to the Summary Table.

CPPI Port 0 Flow ID Offset

Table 11-363. P0_FLOW_ID_OFFSET_REG Register Field Descriptions

Bit	Field	Type	Reset	Description
31-14	RESERVED	R/W	X	
13-0	VALUE	R/W	0h	This value is added to the thread/Flow_ID in CPPI transmit PSI Info Word 0

Copyright © 2025 Texas Instruments Incorporated

11.2.1.6.66 P0_BLK_CNT_REG Register (Offset = 00021010h) [Reset = X]

P0_BLK_CNT_REG is shown in Table 11-364.

Return to the Summary Table.

CPPI Port 0 FIFO Block Usage Count

Table 11-364. P0_BLK_CNT_REG Register Field Descriptions

Bit	Field	Type	Reset	Description
31-13	RESERVED	R	X	
12-8	TX_BLK_CNT	R	0h	Port 0 Transmit Block Count Usage
7-6	RESERVED	R	X	
5-0	RX_BLK_CNT	R	1h	Port 0 Receive Block Count Usage

Copyright © 2025 Texas Instruments Incorporated

11.2.1.6.67 P0_PORT_VLAN_REG Register (Offset = 00021014h) [Reset = X]

P0_PORT_VLAN_REG is shown in Table 11-365.

Return to the Summary Table.

CPPI Port 0 VLAN

Table 11-365. P0_PORT_VLAN_REG Register Field Descriptions

Bit	Field	Type	Reset	Description
31-16	RESERVED	R/W	X	
15-13	PORT_PRI	R/W	0h	Port VLAN Priority
12	PORT_CFI	R/W	0h	Port CFI bit
11-0	PORT_VID	R/W	0h	Port VLAN ID

Copyright © 2025 Texas Instruments Incorporated

11.2.1.6.68 P0_TX_PRI_MAP_REG Register (Offset = 00021018h) [Reset = X]

P0_TX_PRI_MAP_REG is shown in Table 11-366.

Return to the Summary Table.

CPPI Port 0 Tx Header Pri to Switch Pri Mapping

Table 11-366. P0_TX_PRI_MAP_REG Register Field Descriptions

Bit	Field	Type	Reset	Description
31	RESERVED	R/W	X	
30-28	PRI7	R/W	7h	Priority 7
27	RESERVED	R/W	X	
26-24	PRI6	R/W	6h	Priority 6
23	RESERVED	R/W	X	
22-20	PRI5	R/W	5h	Priority 5
19	RESERVED	R/W	X	
18-16	PRI4	R/W	4h	Priority 4
15	RESERVED	R/W	X	
14-12	PRI3	R/W	3h	Priority 3
11	RESERVED	R/W	X	
10-8	PRI2	R/W	2h	Priority 2
7	RESERVED	R/W	X	
6-4	PRI1	R/W	1h	Priority 1
3	RESERVED	R/W	X	
2-0	PRI0	R/W	0h	Priority 0

Copyright © 2025 Texas Instruments Incorporated

11.2.1.6.69 P0_PRI_CTL_REG Register (Offset = 0002101Ch) [Reset = X]

P0_PRI_CTL_REG is shown in Table 11-367.

Return to the Summary Table.

CPPI Port 0 Priority Control

Table 11-367. P0_PRI_CTL_REG Register Field Descriptions

Bit	Field	Type	Reset	Description
31-24	RESERVED	R/W	X	
23-16	RX_FLOW_PRI	R/W	0h	Receive Priority Based Flow Control Enable (per priority)
15-9	RESERVED	R/W	X	
8	RX_PTYPE	R/W	0h	Receive Priority Type
7-0	RESERVED	R/W	X	

Copyright © 2025 Texas Instruments Incorporated

11.2.1.6.70 P0_RX_PRI_MAP_REG Register (Offset = 00021020h) [Reset = X]

P0_RX_PRI_MAP_REG is shown in Table 11-368.

Return to the Summary Table.

CPPI Port 0 RX Pkt Pri to Header Pri Map

Table 11-368. P0_RX_PRI_MAP_REG Register Field Descriptions

Bit	Field	Type	Reset	Description
31	RESERVED	R/W	X	
30-28	PRI7	R/W	7h	Priority 7
27	RESERVED	R/W	X	
26-24	PRI6	R/W	6h	Priority 6
23	RESERVED	R/W	X	
22-20	PRI5	R/W	5h	Priority 5
19	RESERVED	R/W	X	
18-16	PRI4	R/W	4h	Priority 4
15	RESERVED	R/W	X	
14-12	PRI3	R/W	3h	Priority 3
11	RESERVED	R/W	X	
10-8	PRI2	R/W	2h	Priority 2
7	RESERVED	R/W	X	
6-4	PRI1	R/W	1h	Priority 1
3	RESERVED	R/W	X	
2-0	PRI0	R/W	0h	Priority 0

Copyright © 2025 Texas Instruments Incorporated

11.2.1.6.71 P0_RX_MAXLEN_REG Register (Offset = 00021024h) [Reset = X]

P0_RX_MAXLEN_REG is shown in Table 11-369.

Return to the Summary Table.

CPPI Port 0 Receive Frame Max Length

Table 11-369. P0_RX_MAXLEN_REG Register Field Descriptions

Bit	Field	Type	Reset	Description
31-14	RESERVED	R/W	X	
13-0	RX_MAXLEN	R/W	5EEh	Rx Maximum Frame Length

Copyright © 2025 Texas Instruments Incorporated

11.2.1.6.72 P0_TX_BLKS_PRI_REG Register (Offset = 00021028h) [Reset = 01245678h]

P0_TX_BLKS_PRI_REG is shown in Table 11-370.

Return to the Summary Table.

CPPI Port 0 Transmit Block Sub Per Priority

Table 11-370. P0_TX_BLKS_PRI_REG Register Field Descriptions

Bit	Field	Type	Reset	Description
31-28	PRI7	R/W	0h	Priority 7 Port Transmit Blocks
27-24	PRI6	R/W	1h	Priority 6 Port Transmit Blocks
23-20	PRI5	R/W	2h	Priority 5 Port Transmit Blocks
19-16	PRI4	R/W	4h	Priority 4 Port Transmit Blocks
15-12	PRI3	R/W	5h	Priority 3 Port Transmit Blocks
11-8	PRI2	R/W	6h	Priority 2 Port Transmit Blocks
7-4	PRI1	R/W	7h	Priority 1 Port Transmit Blocks
3-0	PRI0	R/W	8h	Priority 0 Port Transmit Blocks

Copyright © 2025 Texas Instruments Incorporated

11.2.1.6.73 P0_IDLE2LPI_REG Register (Offset = 00021030h) [Reset = X]

P0_IDLE2LPI_REG is shown in Table 11-371.

Return to the Summary Table.

Port 0 EEE Idle to LPI counter

Table 11-371. P0_IDLE2LPI_REG Register Field Descriptions

Bit	Field	Type	Reset	Description
31-24	RESERVED	R/W	X	
23-0	COUNT	R/W	0h	Port 0 EEE Idle to LPI counter load value

Copyright © 2025 Texas Instruments Incorporated

11.2.1.6.74 P0_LPI2WAKE_REG Register (Offset = 00021034h) [Reset = X]

P0_LPI2WAKE_REG is shown in Table 11-372.

Return to the Summary Table.

Port 0 EEE LPI to wake counter

Table 11-372. P0_LPI2WAKE_REG Register Field Descriptions

Bit	Field	Type	Reset	Description
31-24	RESERVED	R/W	X	
23-0	COUNT	R/W	0h	Port 0 EEE LPI to wake counter load value

Copyright © 2025 Texas Instruments Incorporated

11.2.1.6.75 P0_EEE_STATUS_REG Register (Offset = 00021038h) [Reset = X]

P0_EEE_STATUS_REG is shown in Table 11-373.

Return to the Summary Table.

Port 0 EEE status

Table 11-373. P0_EEE_STATUS_REG Register Field Descriptions

Bit	Field	Type	Reset	Description
31-7	RESERVED	R	X	
6	TX_FIFO_EMPTY	R	1h	CPPI port 0 transmit FIFO (switch egress) is empty - contains no packets
5	RX_FIFO_EMPTY	R	1h	CPPI port 0 receive FIFO (switch ingress) is empty - contains no packets
4	TX_FIFO_HOLD	R	0h	CPPI port 0 transmit FIFO hold - asserted in the LPI state and during the LPI2WAKE count time
3	TX_WAKE	R	0h	CPPI port 0 transmit wakeup - asserted in the transmit LPI2WAKE count time
2	TX_LPI	R	0h	CPPI port 0 transmit LPI state - asserted when the port 0 transmit is in the LPI state
1	RX_LPI	R	0h	CPPI port 0 receive LPI state - asserted when the port 0 receive is in the LPI state
0	WAIT_IDLE2LPI	R	0h	CPPI port 0 wait idle to LPI - asserted when port 0 is counting the IDLE2LPI time

Copyright © 2025 Texas Instruments Incorporated

11.2.1.6.76 P0_RX_PKTS_PRI_REG Register (Offset = 0002103Ch) [Reset = 00000000h]

P0_RX_PKTS_PRI_REG is shown in Table 11-374.

Return to the Summary Table.

CPPI Port Receive Packets per priority

Table 11-374. P0_RX_PKTS_PRI_REG Register Field Descriptions

Bit	Field	Type	Reset	Description
31-28	PRI7	R/W	0h	Priority 7 Port Port 0 Receive Packets
27-24	PRI6	R/W	0h	Priority 6 Port Port 0 Receive Packets
23-20	PRI5	R/W	0h	Priority 5 Port Port 0 Receive Packets
19-16	PRI4	R/W	0h	Priority 4 Port Port 0 Receive Packets
15-12	PRI3	R/W	0h	Priority 3 Port Port 0 Receive Packets
11-8	PRI2	R/W	0h	Priority 2 Port Port 0 Receive Packets
7-4	PRI1	R/W	0h	Priority 1 Port Port 0 Receive Packets
3-0	PRI0	R/W	0h	Priority 0 Port Port 0 Receive Packets

Copyright © 2025 Texas Instruments Incorporated

11.2.1.6.77 P0_RX_GAP_REG Register (Offset = 0002104Ch) [Reset = X]

P0_RX_GAP_REG is shown in Table 11-375.

Return to the Summary Table.

Port 0 Receive Gap Register

Table 11-375. P0_RX_GAP_REG Register Field Descriptions

Bit	Field	Type	Reset	Description
31-26	RESERVED	R/W	X	
25-16	RX_GAP_CNT	R/W	100h	Port 0 Receive Gap Count
15-8	RESERVED	R/W	X	
7-0	RX_GAP_EN	R/W	0h	Port 0 Receive Gap Enable

Copyright © 2025 Texas Instruments Incorporated

11.2.1.6.78 P0_FIFO_STATUS_REG Register (Offset = 00021050h) [Reset = X]

P0_FIFO_STATUS_REG is shown in Table 11-376.

Return to the Summary Table.

Port 0 FIFO Status

Table 11-376. P0_FIFO_STATUS_REG Register Field Descriptions

Bit	Field	Type	Reset	Description
31-8	RESERVED	R	X	
7-0	tx_pri_active	R	0h	Port 0 FIFO Status

Copyright © 2025 Texas Instruments Incorporated

11.2.1.6.79 P0_RX_DSCP_MAP_REG_y Register (Offset = 00021120h + formula) [Reset = X]

P0_RX_DSCP_MAP_REG_y is shown in Table 11-377.

Return to the Summary Table.

CPPI Port 0 Receive IPV4/IPV6 DSCP Map N

Offset = 00021120h + (y * 4h); where y = 0h to 7h

Table 11-377. P0_RX_DSCP_MAP_REG_y Register Field Descriptions

Bit	Field	Type	Reset	Description
31	RESERVED	R/W	X	
30-28	PRI7	R/W	0h	A DSCP IPV4/V6 packet TOS of N*8+7 is mapped to this received priority
27	RESERVED	R/W	X	
26-24	PRI6	R/W	0h	A DSCP IPV4/V6 packet TOS of N*8+6 is mapped to this received priority
23	RESERVED	R/W	X	
22-20	PRI5	R/W	0h	A DSCP IPV4/V6 packet TOS of N*8+5 is mapped to this received priority
19	RESERVED	R/W	X	
18-16	PRI4	R/W	0h	A DSCP IPV4/V6 packet TOS of N*8+4 is mapped to this received priority
15	RESERVED	R/W	X	
14-12	PRI3	R/W	0h	A DSCP IPV4/V6 packet TOS of N*8+3 is mapped to this received priority
11	RESERVED	R/W	X	
10-8	PRI2	R/W	0h	A DSCP IPV4/V6 packet TOS of N*8+2 is mapped to this received priority
7	RESERVED	R/W	X	
6-4	PRI1	R/W	0h	A DSCP IPV4/V6 packet TOS of N*8+1 is mapped to this received priority
3	RESERVED	R/W	X	
2-0	PRI0	R/W	0h	A DSCP IPV4/V6 packet TOS of N*8+0 is mapped to this received priority

Copyright © 2025 Texas Instruments Incorporated

11.2.1.6.80 P0_PRI_CIR_REG_y Register (Offset = 00021140h + formula) [Reset = X]

P0_PRI_CIR_REG_y is shown in Table 11-378.

Return to the Summary Table.

CPPI Port 0 Rx Priority P Committed Information Rate

Offset = 00021140h + (y * 4h); where y = 0h to 7h

Table 11-378. P0_PRI_CIR_REG_y Register Field Descriptions

Bit	Field	Type	Reset	Description
31-28	RESERVED	R/W	X	
27-0	PRI_CIR	R/W	0h	Priority N CIR

Copyright © 2025 Texas Instruments Incorporated

11.2.1.6.81 P0_PRI_EIR_REG_y Register (Offset = 00021160h + formula) [Reset = X]

P0_PRI_EIR_REG_y is shown in Table 11-379.

Return to the Summary Table.

CPPI Port 0 Rx Priority P Excess Information Rate

Offset = 00021160h + (y * 4h); where y = 0h to 7h

Table 11-379. P0_PRI_EIR_REG_y Register Field Descriptions

Bit	Field	Type	Reset	Description
31-28	RESERVED	R/W	X	
27-0	PRI_EIR	R/W	0h	Priority N EIR

Copyright © 2025 Texas Instruments Incorporated

11.2.1.6.82 P0_TX_D_THRESH_SET_L_REG Register (Offset = 00021180h) [Reset = X]

P0_TX_D_THRESH_SET_L_REG is shown in Table 11-380.

Return to the Summary Table.

CPPI Port 0 Tx PFC Destination Threshold Set Low

Table 11-380. P0_TX_D_THRESH_SET_L_REG Register Field Descriptions

Bit	Field	Type	Reset	Description
31-29	RESERVED	R/W	X	
28-24	PRI3	R/W	1Fh	Port Priority Based Flow Control Threshold Set Value for Priority 3
23-21	RESERVED	R/W	X	
20-16	PRI2	R/W	1Fh	Port Priority Based Flow Control Threshold Set Value for Priority 2
15-13	RESERVED	R/W	X	
12-8	PRI1	R/W	1Fh	Port Priority Based Flow Control Threshold Set Value for Priority 1
7-5	RESERVED	R/W	X	
4-0	PRI0	R/W	1Fh	Port Priority Based Flow Control Threshold Set Value for Priority 0

Copyright © 2025 Texas Instruments Incorporated

11.2.1.6.83 P0_TX_D_THRESH_SET_H_REG Register (Offset = 00021184h) [Reset = X]

P0_TX_D_THRESH_SET_H_REG is shown in Table 11-381.

Return to the Summary Table.

CPPI Port 0 Tx PFC Destination Threshold Set High

Table 11-381. P0_TX_D_THRESH_SET_H_REG Register Field Descriptions

Bit	Field	Type	Reset	Description
31-29	RESERVED	R/W	X	
28-24	PRI7	R/W	1Fh	Port Priority Based Flow Control Threshold Set Value for Priority 7
23-21	RESERVED	R/W	X	
20-16	PRI6	R/W	1Fh	Port Priority Based Flow Control Threshold Set Value for Priority 6
15-13	RESERVED	R/W	X	
12-8	PRI5	R/W	1Fh	Port Priority Based Flow Control Threshold Set Value for Priority 5
7-5	RESERVED	R/W	X	
4-0	PRI4	R/W	1Fh	Port Priority Based Flow Control Threshold Set Value for Priority 4

Copyright © 2025 Texas Instruments Incorporated

11.2.1.6.84 P0_TX_D_THRESH_CLR_L_REG Register (Offset = 00021188h) [Reset = X]

P0_TX_D_THRESH_CLR_L_REG is shown in Table 11-382.

Return to the Summary Table.

CPPI Port 0 Tx PFC Destination Threshold Clr Low

Table 11-382. P0_TX_D_THRESH_CLR_L_REG Register Field Descriptions

Bit	Field	Type	Reset	Description
31-29	RESERVED	R/W	X	
28-24	PRI3	R/W	0h	Port Priority Based Flow Control Threshold Clear Value for Priority 3
23-21	RESERVED	R/W	X	
20-16	PRI2	R/W	0h	Port Priority Based Flow Control Threshold Clear Value for Priority 2
15-13	RESERVED	R/W	X	
12-8	PRI1	R/W	0h	Port Priority Based Flow Control Threshold Clear Value for Priority 1
7-5	RESERVED	R/W	X	
4-0	PRI0	R/W	0h	Port Priority Based Flow Control Threshold Clear Value for Priority 0

Copyright © 2025 Texas Instruments Incorporated

11.2.1.6.85 P0_TX_D_THRESH_CLR_H_REG Register (Offset = 0002118Ch) [Reset = X]

P0_TX_D_THRESH_CLR_H_REG is shown in Table 11-383.

Return to the Summary Table.

CPPI Port 0 Tx PFC Destination Threshold Clr High

Table 11-383. P0_TX_D_THRESH_CLR_H_REG Register Field Descriptions

Bit	Field	Type	Reset	Description
31-29	RESERVED	R/W	X	
28-24	PRI7	R/W	0h	Port Priority Based Flow Control Threshold Clear Value for Priority 7
23-21	RESERVED	R/W	X	
20-16	PRI6	R/W	0h	Port Priority Based Flow Control Threshold Clear Value for Priority 6
15-13	RESERVED	R/W	X	
12-8	PRI5	R/W	0h	Port Priority Based Flow Control Threshold Clear Value for Priority 5
7-5	RESERVED	R/W	X	
4-0	PRI4	R/W	0h	Port Priority Based Flow Control Threshold Clear Value for Priority 4

Copyright © 2025 Texas Instruments Incorporated

11.2.1.6.86 P0_TX_G_BUF_THRESH_SET_L_REG Register (Offset = 00021190h) [Reset = X]

P0_TX_G_BUF_THRESH_SET_L_REG is shown in Table 11-384.

Return to the Summary Table.

CPPI Port 0 Tx PFC Global Buffer Threshold Set Low

Table 11-384. P0_TX_G_BUF_THRESH_SET_L_REG Register Field Descriptions

Bit	Field	Type	Reset	Description
31-29	RESERVED	R/W	X	
28-24	PRI3	R/W	1Fh	Port Priority Based Flow Control Threshold Set Value for Priority 3
23-21	RESERVED	R/W	X	
20-16	PRI2	R/W	1Fh	Port Priority Based Flow Control Threshold Set Value for Priority 2
15-13	RESERVED	R/W	X	
12-8	PRI1	R/W	1Fh	Port Priority Based Flow Control Threshold Set Value for Priority 1
7-5	RESERVED	R/W	X	
4-0	PRI0	R/W	1Fh	Port Priority Based Flow Control Threshold Set Value for Priority 0

Copyright © 2025 Texas Instruments Incorporated

11.2.1.6.87 P0_TX_G_BUF_THRESH_SET_H_REG Register (Offset = 00021194h) [Reset = X]

P0_TX_G_BUF_THRESH_SET_H_REG is shown in Table 11-385.

Return to the Summary Table.

CPPI Port 0 Tx PFC Global Buffer Threshold Set High

Table 11-385. P0_TX_G_BUF_THRESH_SET_H_REG Register Field Descriptions

Bit	Field	Type	Reset	Description
31-29	RESERVED	R/W	X	
28-24	PRI7	R/W	1Fh	Port Priority Based Flow Control Threshold Set Value for Priority 7
23-21	RESERVED	R/W	X	
20-16	PRI6	R/W	1Fh	Port Priority Based Flow Control Threshold Set Value for Priority 6
15-13	RESERVED	R/W	X	
12-8	PRI5	R/W	1Fh	Port Priority Based Flow Control Threshold Set Value for Priority 5
7-5	RESERVED	R/W	X	
4-0	PRI4	R/W	1Fh	Port Priority Based Flow Control Threshold Set Value for Priority 4

Copyright © 2025 Texas Instruments Incorporated

11.2.1.6.88 P0_TX_G_BUF_THRESH_CLR_L_REG Register (Offset = 00021198h) [Reset = X]

P0_TX_G_BUF_THRESH_CLR_L_REG is shown in Table 11-386.

Return to the Summary Table.

CPPI Port 0 Tx PFC Global Buffer Threshold Clr Low

Table 11-386. P0_TX_G_BUF_THRESH_CLR_L_REG Register Field Descriptions

Bit	Field	Type	Reset	Description
31-29	RESERVED	R/W	X	
28-24	PRI3	R/W	0h	Port Priority Based Flow Control Threshold Clear Value for Priority 3
23-21	RESERVED	R/W	X	
20-16	PRI2	R/W	0h	Port Priority Based Flow Control Threshold Clear Value for Priority 2
15-13	RESERVED	R/W	X	
12-8	PRI1	R/W	0h	Port Priority Based Flow Control Threshold Clear Value for Priority 1
7-5	RESERVED	R/W	X	
4-0	PRI0	R/W	0h	Port Priority Based Flow Control Threshold Clear Value for Priority 0

Copyright © 2025 Texas Instruments Incorporated

11.2.1.6.89 P0_TX_G_BUF_THRESH_CLR_H_REG Register (Offset = 0002119Ch) [Reset = X]

P0_TX_G_BUF_THRESH_CLR_H_REG is shown in Table 11-387.

Return to the Summary Table.

CPPI Port 0 Tx PFC Global Buffer Threshold Clr High

Table 11-387. P0_TX_G_BUF_THRESH_CLR_H_REG Register Field Descriptions

Bit	Field	Type	Reset	Description
31-29	RESERVED	R/W	X	
28-24	PRI7	R/W	0h	Port Priority Based Flow Control Threshold Clear Value for Priority 7
23-21	RESERVED	R/W	X	
20-16	PRI6	R/W	0h	Port Priority Based Flow Control Threshold Clear Value for Priority 6
15-13	RESERVED	R/W	X	
12-8	PRI5	R/W	0h	Port Priority Based Flow Control Threshold Clear Value for Priority 5
7-5	RESERVED	R/W	X	
4-0	PRI4	R/W	0h	Port Priority Based Flow Control Threshold Clear Value for Priority 4

Copyright © 2025 Texas Instruments Incorporated

11.2.1.6.90 P0_SRC_ID_A_REG Register (Offset = 00021300h) [Reset = 04030201h]

P0_SRC_ID_A_REG is shown in Table 11-388.

Return to the Summary Table.

CPPI Port 0 CPPI Source ID A

Table 11-388. P0_SRC_ID_A_REG Register Field Descriptions

Bit	Field	Type	Reset	Description
31-24	PORT4	R/W	4h	Port 4 CPPI Info Word0 Source ID Value
23-16	PORT3	R/W	3h	Port 3 CPPI Info Word0 Source ID Value
15-8	PORT2	R/W	2h	Port 2 CPPI Info Word0 Source ID Value
7-0	PORT1	R/W	1h	Port 1 CPPI Info Word0 Source ID Value

Copyright © 2025 Texas Instruments Incorporated

11.2.1.6.91 P0_SRC_ID_B_REG Register (Offset = 00021304h) [Reset = 08070605h]

P0_SRC_ID_B_REG is shown in Table 11-389.

Return to the Summary Table.

CPPI Port 0 CPPI Source ID B

Table 11-389. P0_SRC_ID_B_REG Register Field Descriptions

Bit	Field	Type	Reset	Description
31-24	PORT8	R/W	8h	Port 8 CPPI Info Word0 Source ID Value
23-16	PORT7	R/W	7h	Port 7 CPPI Info Word0 Source ID Value
15-8	PORT6	R/W	6h	Port 6 CPPI Info Word0 Source ID Value
7-0	PORT5	R/W	5h	Port 5 CPPI Info Word0 Source ID Value

Copyright © 2025 Texas Instruments Incorporated

11.2.1.6.92 P0_HOST_BLKS_PRI_REG Register (Offset = 00021320h) [Reset = 00000000h]

P0_HOST_BLKS_PRI_REG is shown in Table 11-390.

Return to the Summary Table.

CPPI Port 0 Host Blocks Priority

Table 11-390. P0_HOST_BLKS_PRI_REG Register Field Descriptions

Bit	Field	Type	Reset	Description
31-28	PRI7	R/W	0h	Priority 7 Host Blocks
27-24	PRI6	R/W	0h	Priority 6 Host Blocks
23-20	PRI5	R/W	0h	Priority 5 Host Blocks
19-16	PRI4	R/W	0h	Priority 4 Host Blocks
15-12	PRI3	R/W	0h	Priority 3 Host Blocks
11-8	PRI2	R/W	0h	Priority 2 Host Blocks
7-4	PRI1	R/W	0h	Priority 1 Host Blocks
3-0	PRI0	R/W	0h	Priority 0 Host Blocks

Copyright © 2025 Texas Instruments Incorporated

11.2.1.6.93 PN_RESERVED_REG Register (Offset = 00022000h) [Reset = 00000000h]

PN_RESERVED_REG is shown in Table 11-391.

Return to the Summary Table.

Reserved

Table 11-391. PN_RESERVED_REG Register Field Descriptions

Bit	Field	Type	Reset	Description
31-0	RESERVED	R	0h	Reserved register for memory map alignment

Copyright © 2025 Texas Instruments Incorporated

11.2.1.6.94 PN_CONTROL_REG Register (Offset = 00022004h) [Reset = X]

PN_CONTROL_REG is shown in Table 11-392.

Return to the Summary Table.

Enet Port N Control

Table 11-392. PN_CONTROL_REG Register Field Descriptions

Bit	Field	Type	Reset	Description
31-18	RESERVED	R/W	X	
17	EST_PORT_EN	R/W	0h	EST Port Enable
16	RESERVED	R/W	X	
15	RX_ECC_ERR_EN	R/W	0h	Port 0 Receive ECC Error Enable
14	TX_ECC_ERR_EN	R/W	0h	Port 0 Transmit ECC Error Enable
13	RESERVED	R/W	X	
12	TX_LPI_CLKSTOP_EN	R/W	0h	Transmit LPI clockstop enable
11-3	RESERVED	R/W	X	
2	DSCP_IPV6_EN	R/W	0h	IPv6 DSCP enable
1	DSCP_IPV4_EN	R/W	0h	IPv4 DSCP enable
0	RESERVED	R/W	X	

Copyright © 2025 Texas Instruments Incorporated

11.2.1.6.95 PN_MAX_BLKS_REG Register (Offset = 00022008h) [Reset = X]

PN_MAX_BLKS_REG is shown in Table 11-393.

Return to the Summary Table.

Enet Port N FIFO Max Blocks

Table 11-393. PN_MAX_BLKS_REG Register Field Descriptions

Bit	Field	Type	Reset	Description
31-16	RESERVED	R/W	X	
15-8	TX_MAX_BLKS	R/W	10h	Transmit FIFO maximum blocks
7-0	RX_MAX_BLKS	R/W	4h	Receive FIFO maximum blocks

Copyright © 2025 Texas Instruments Incorporated

11.2.1.6.96 PN_BLK_CNT_REG Register (Offset = 00022010h) [Reset = X]

PN_BLK_CNT_REG is shown in Table 11-394.

Return to the Summary Table.

Enet Port N FIFO Block Usage Count

Table 11-394. PN_BLK_CNT_REG Register Field Descriptions

Bit	Field	Type	Reset	Description
31-22	RESERVED	R	X	
21-16	RX_BLK_CNT_P	R	0h	Receive Prempt Queue Block Count Usage
15-13	RESERVED	R	X	
12-8	TX_BLK_CNT	R	0h	Transmit Block Count Usage
7-6	RESERVED	R	X	
5-0	RX_BLK_CNT_E	R	1h	Receive Block Count Usage

Copyright © 2025 Texas Instruments Incorporated

11.2.1.6.97 PN_PORT_VLAN_REG Register (Offset = 00022014h) [Reset = X]

PN_PORT_VLAN_REG is shown in Table 11-395.

Return to the Summary Table.

Enet Port N VLAN

Table 11-395. PN_PORT_VLAN_REG Register Field Descriptions

Bit	Field	Type	Reset	Description
31-16	RESERVED	R/W	X	
15-13	PORT_PRI	R/W	0h	Port VLAN Priority
12	PORT_CFI	R/W	0h	Port CFI bit
11-0	PORT_VID	R/W	0h	Port VLAN ID

Copyright © 2025 Texas Instruments Incorporated

11.2.1.6.98 PN_TX_PRI_MAP_REG Register (Offset = 00022018h) [Reset = X]

PN_TX_PRI_MAP_REG is shown in Table 11-396.

Return to the Summary Table.

Enet Port N Tx Header Pri to Switch Pri Mapping

Table 11-396. PN_TX_PRI_MAP_REG Register Field Descriptions

Bit	Field	Type	Reset	Description
31	RESERVED	R/W	X	
30-28	PRI7	R/W	7h	Priority 7
27	RESERVED	R/W	X	
26-24	PRI6	R/W	6h	Priority 6
23	RESERVED	R/W	X	
22-20	PRI5	R/W	5h	Priority 5
19	RESERVED	R/W	X	
18-16	PRI4	R/W	4h	Priority 4
15	RESERVED	R/W	X	
14-12	PRI3	R/W	3h	Priority 3
11	RESERVED	R/W	X	
10-8	PRI2	R/W	2h	Priority 2
7	RESERVED	R/W	X	
6-4	PRI1	R/W	1h	Priority 1
3	RESERVED	R/W	X	
2-0	PRI0	R/W	0h	Priority 0

Copyright © 2025 Texas Instruments Incorporated

11.2.1.6.99 PN_PRI_CTL_REG Register (Offset = 0002201Ch) [Reset = X]

PN_PRI_CTL_REG is shown in Table 11-397.

Return to the Summary Table.

Enet Port N Priority Control

Table 11-397. PN_PRI_CTL_REG Register Field Descriptions

Bit	Field	Type	Reset	Description
31-24	TX_FLOW_PRI	R/W	0h	Transmit Priority Based Flow Control Enable (per priority)
23-16	RX_FLOW_PRI	R/W	0h	Receive Priority Based Flow Control Enable (per priority)
15-12	TX_HOST_BLKS_REM	R/W	9h	Transmit FIFO Blocks that must be free before a non rate-limited CPPI Port 0 receive thread can begin sending a packet
11-0	RESERVED	R/W	X	

Copyright © 2025 Texas Instruments Incorporated

11.2.1.6.100 PN_RX_PRI_MAP_REG Register (Offset = 00022020h) [Reset = X]

PN_RX_PRI_MAP_REG is shown in Table 11-398.

Return to the Summary Table.

Enet Port N RX Pkt Pri to Header Pri Map

Table 11-398. PN_RX_PRI_MAP_REG Register Field Descriptions

Bit	Field	Type	Reset	Description
31	RESERVED	R/W	X	
30-28	PRI7	R/W	7h	Priority 7
27	RESERVED	R/W	X	
26-24	PRI6	R/W	6h	Priority 6
23	RESERVED	R/W	X	
22-20	PRI5	R/W	5h	Priority 5
19	RESERVED	R/W	X	
18-16	PRI4	R/W	4h	Priority 4
15	RESERVED	R/W	X	
14-12	PRI3	R/W	3h	Priority 3
11	RESERVED	R/W	X	
10-8	PRI2	R/W	2h	Priority 2
7	RESERVED	R/W	X	
6-4	PRI1	R/W	1h	Priority 1
3	RESERVED	R/W	X	
2-0	PRI0	R/W	0h	Priority 0

Copyright © 2025 Texas Instruments Incorporated

11.2.1.6.101 PN_RX_MAXLEN_REG Register (Offset = 00022024h) [Reset = X]

PN_RX_MAXLEN_REG is shown in Table 11-399.

Return to the Summary Table.

Enet Port N Receive Frame Max Length

Table 11-399. PN_RX_MAXLEN_REG Register Field Descriptions

Bit	Field	Type	Reset	Description
31-14	RESERVED	R/W	X	
13-0	RX_MAXLEN	R/W	5EEh	Rx Maximum Frame Length

Copyright © 2025 Texas Instruments Incorporated

11.2.1.6.102 PN_TX_BLKS_PRI_REG Register (Offset = 00022028h) [Reset = 01245678h]

PN_TX_BLKS_PRI_REG is shown in Table 11-400.

Return to the Summary Table.

Enet Port N Transmit Block Sub Per Priority

Table 11-400. PN_TX_BLKS_PRI_REG Register Field Descriptions

Bit	Field	Type	Reset	Description
31-28	PRI7	R/W	0h	Priority 7 Port Transmit Blocks
27-24	PRI6	R/W	1h	Priority 6 Port Transmit Blocks
23-20	PRI5	R/W	2h	Priority 5 Port Transmit Blocks
19-16	PRI4	R/W	4h	Priority 4 Port Transmit Blocks
15-12	PRI3	R/W	5h	Priority 3 Port Transmit Blocks
11-8	PRI2	R/W	6h	Priority 2 Port Transmit Blocks
7-4	PRI1	R/W	7h	Priority 1 Port Transmit Blocks
3-0	PRI0	R/W	8h	Priority 0 Port Transmit Blocks

Copyright © 2025 Texas Instruments Incorporated

11.2.1.6.103 PN_RX_FLOW_THRESH_REG Register (Offset = 0002202Ch) [Reset = X]

PN_RX_FLOW_THRESH_REG is shown in Table 11-401.

Return to the Summary Table.

Enet MAC Receive Flow Threshold in Receive Buffer Words

Table 11-401. PN_RX_FLOW_THRESH_REG Register Field Descriptions

Bit	Field	Type	Reset	Description
31-9	RESERVED	R/W	X	
8-0	COUNT	R/W	40h	Receive Flow Threshold in Words

Copyright © 2025 Texas Instruments Incorporated

11.2.1.6.104 PN_IDLE2LPI_REG Register (Offset = 00022030h) [Reset = X]

PN_IDLE2LPI_REG is shown in Table 11-402.

Return to the Summary Table.

Enet Port N EEE Idle to LPI counter

Table 11-402. PN_IDLE2LPI_REG Register Field Descriptions

Bit	Field	Type	Reset	Description
31-24	RESERVED	R/W	X	
23-0	COUNT	R/W	0h	EEE Idle to LPI counter load value

Copyright © 2025 Texas Instruments Incorporated

11.2.1.6.105 PN_LPI2WAKE_REG Register (Offset = 00022034h) [Reset = X]

PN_LPI2WAKE_REG is shown in Table 11-403.

Return to the Summary Table.

Enet Port N EEE LPI to wake counter

Table 11-403. PN_LPI2WAKE_REG Register Field Descriptions

Bit	Field	Type	Reset	Description
31-24	RESERVED	R/W	X	
23-0	COUNT	R/W	0h	EEE LPI to wake counter load value

Copyright © 2025 Texas Instruments Incorporated

11.2.1.6.106 PN_EEE_STATUS_REG Register (Offset = 00022038h) [Reset = X]

PN_EEE_STATUS_REG is shown in Table 11-404.

Return to the Summary Table.

Enet Port N EEE status

Table 11-404. PN_EEE_STATUS_REG Register Field Descriptions

Bit	Field	Type	Reset	Description
31-7	RESERVED	R	X	
6	TX_FIFO_EMPTY	R	1h	Transmit FIFO (switch egress) is empty - contains no packets
5	RX_FIFO_EMPTY	R	1h	Receive FIFO (switch ingress) is empty - contains no packets
4	TX_FIFO_HOLD	R	0h	Transmit FIFO hold - asserted in the LPI state and during the LPI2WAKE count time
3	TX_WAKE	R	0h	Transmit wakeup - asserted in the transmit LPI2WAKE count time
2	TX_LPI	R	0h	Transmit LPI state - asserted when the port 0 transmit is in the LPI state
1	RX_LPI	R	1h	Receive LPI state - asserted when the port 0 receive is in the LPI state
0	WAIT_IDLE2LPI	R	0h	CPPI port 0 wait idle to LPI - asserted when port 0 is counting the IDLE2LPI time

Copyright © 2025 Texas Instruments Incorporated

11.2.1.6.107 PN_FIFO_STATUS_REG Register (Offset = 00022050h) [Reset = X]

PN_FIFO_STATUS_REG is shown in Table 11-405.

Return to the Summary Table.

Enet Port N FIFO STATUS

Table 11-405. PN_FIFO_STATUS_REG Register Field Descriptions

Bit	Field	Type	Reset	Description
31-19	RESERVED	R	X	
18	est_bufact	R	0h	Transmit FIFO EST Buffer Active
17	est_add_err	R	0h	Transmit FIFO EST Address Error
16	est_cnt_err	R	0h	Transmit FIFO EST Count Error
15-8	tx_e_mac_allow	R	FFh	Transmit FIFO Express Queue Priority Allow
7-0	tx_pri_active	R	0h	Transmit FIFO Priority Active

Copyright © 2025 Texas Instruments Incorporated

11.2.1.6.108 PN_EST_CONTROL_REG Register (Offset = 00022060h) [Reset = X]

PN_EST_CONTROL_REG is shown in Table 11-406.

Return to the Summary Table.

Enet Port N EST CONTROL

Table 11-406. PN_EST_CONTROL_REG Register Field Descriptions

Bit	Field	Type	Reset	Description
31-26	RESERVED	R/W	X	
25-16	est_fill_margin	R/W	0h	Transmit FIFO EST Fill Margin
15-9	est_prempt_comp	R/W	0h	Transmit FIFO EST Prempt Comparision Value
8	est_fill_en	R/W	0h	Transmit FIFO EST Fill Enable
7-5	est_ts_pri	R/W	0h	Transmit FIFO EST TimeStamp Priority
4	est_ts_onepri	R/W	0h	Transmit FIFO EST TimeStamp One Priority
3	est_ts_first	R/W	0h	Transmit FIFO EST TimeStamp First Express Packet
2	est_ts_en	R/W	0h	Transmit FIFO EST TimeStamp Enable
1	est_bufsel	R/W	0h	Transmit FIFO EST Buffer Select
0	est_onebuf	R/W	0h	Transmit FIFO EST One Buffer

Copyright © 2025 Texas Instruments Incorporated

11.2.1.6.109 PN_RX_DSCP_MAP_REG_y Register (Offset = 00022120h + formula) [Reset = X]

PN_RX_DSCP_MAP_REG_y is shown in Table 11-407.

Return to the Summary Table.

Enet Port N Receive IPV4/IPV6 DSCP Map M

Offset = 00022120h + (y * 4h); where y = 0h to 7h

Table 11-407. PN_RX_DSCP_MAP_REG_y Register Field Descriptions

Bit	Field	Type	Reset	Description
31	RESERVED	R/W	X	
30-28	PRI7	R/W	0h	A DSCP IPV4/V6 packet TOS of N*8+7 is mapped to this received priority
27	RESERVED	R/W	X	
26-24	PRI6	R/W	0h	A DSCP IPV4/V6 packet TOS of N*8+6 is mapped to this received priority
23	RESERVED	R/W	X	
22-20	PRI5	R/W	0h	A DSCP IPV4/V6 packet TOS of N*8+5 is mapped to this received priority
19	RESERVED	R/W	X	
18-16	PRI4	R/W	0h	A DSCP IPV4/V6 packet TOS of N*8+4 is mapped to this received priority
15	RESERVED	R/W	X	
14-12	PRI3	R/W	0h	A DSCP IPV4/V6 packet TOS of N*8+3 is mapped to this received priority
11	RESERVED	R/W	X	
10-8	PRI2	R/W	0h	A DSCP IPV4/V6 packet TOS of N*8+2 is mapped to this received priority
7	RESERVED	R/W	X	
6-4	PRI1	R/W	0h	A DSCP IPV4/V6 packet TOS of N*8+1 is mapped to this received priority
3	RESERVED	R/W	X	
2-0	PRI0	R/W	0h	A DSCP IPV4/V6 packet TOS of N*8+0 is mapped to this received priority

Copyright © 2025 Texas Instruments Incorporated

11.2.1.6.110 PN_PRI_CIR_REG_y Register (Offset = 00022140h + formula) [Reset = X]

PN_PRI_CIR_REG_y is shown in Table 11-408.

Return to the Summary Table.

Enet Port N Rx Priority P Committed Information Rate Value

Offset = 00022140h + (y * 4h); where y = 0h to 7h

Table 11-408. PN_PRI_CIR_REG_y Register Field Descriptions

Bit	Field	Type	Reset	Description
31-28	RESERVED	R/W	X	
27-0	PRI_CIR	R/W	0h	Priority N committed information rate

Copyright © 2025 Texas Instruments Incorporated

11.2.1.6.111 PN_PRI_EIR_REG_y Register (Offset = 00022160h + formula) [Reset = X]

PN_PRI_EIR_REG_y is shown in Table 11-409.

Return to the Summary Table.

Enet Port N Rx Priority P Excess Informatoin Rate Value

Offset = 00022160h + (y * 4h); where y = 0h to 7h

Table 11-409. PN_PRI_EIR_REG_y Register Field Descriptions

Bit	Field	Type	Reset	Description
31-28	RESERVED	R/W	X	
27-0	PRI_EIR	R/W	0h	Priority N Excess Information Rate count

Copyright © 2025 Texas Instruments Incorporated

11.2.1.6.112 PN_TX_D_THRESH_SET_L_REG Register (Offset = 00022180h) [Reset = X]

PN_TX_D_THRESH_SET_L_REG is shown in Table 11-410.

Return to the Summary Table.

Enet Port N Tx PFC Destination Threshold Set Low

Table 11-410. PN_TX_D_THRESH_SET_L_REG Register Field Descriptions

Bit	Field	Type	Reset	Description
31-29	RESERVED	R/W	X	
28-24	PRI3	R/W	1Fh	Port Priority Based Flow Control Threshold Set Value for Priority 3
23-21	RESERVED	R/W	X	
20-16	PRI2	R/W	1Fh	Port Priority Based Flow Control Threshold Set Value for Priority 2
15-13	RESERVED	R/W	X	
12-8	PRI1	R/W	1Fh	Port Priority Based Flow Control Threshold Set Value for Priority 1
7-5	RESERVED	R/W	X	
4-0	PRI0	R/W	1Fh	Port Priority Based Flow Control Threshold Set Value for Priority 0

Copyright © 2025 Texas Instruments Incorporated

11.2.1.6.113 PN_TX_D_THRESH_SET_H_REG Register (Offset = 00022184h) [Reset = X]

PN_TX_D_THRESH_SET_H_REG is shown in Table 11-411.

Return to the Summary Table.

Enet Port N Tx PFC Destination Threshold Set High

Table 11-411. PN_TX_D_THRESH_SET_H_REG Register Field Descriptions

Bit	Field	Type	Reset	Description
31-29	RESERVED	R/W	X	
28-24	PRI7	R/W	1Fh	Port Priority Based Flow Control Threshold Set Value for Priority 7
23-21	RESERVED	R/W	X	
20-16	PRI6	R/W	1Fh	Port Priority Based Flow Control Threshold Set Value for Priority 6
15-13	RESERVED	R/W	X	
12-8	PRI5	R/W	1Fh	Port Priority Based Flow Control Threshold Set Value for Priority 5
7-5	RESERVED	R/W	X	
4-0	PRI4	R/W	1Fh	Port Priority Based Flow Control Threshold Set Value for Priority 4

Copyright © 2025 Texas Instruments Incorporated

11.2.1.6.114 PN_TX_D_THRESH_CLR_L_REG Register (Offset = 00022188h) [Reset = X]

PN_TX_D_THRESH_CLR_L_REG is shown in Table 11-412.

Return to the Summary Table.

Enet Port N Tx PFC Destination Threshold Clr Low

Table 11-412. PN_TX_D_THRESH_CLR_L_REG Register Field Descriptions

Bit	Field	Type	Reset	Description
31-29	RESERVED	R/W	X	
28-24	PRI3	R/W	0h	Port Priority Based Flow Control Threshold Clear Value for Priority 3
23-21	RESERVED	R/W	X	
20-16	PRI2	R/W	0h	Port Priority Based Flow Control Threshold Clear Value for Priority 2
15-13	RESERVED	R/W	X	
12-8	PRI1	R/W	0h	Port Priority Based Flow Control Threshold Clear Value for Priority 1
7-5	RESERVED	R/W	X	
4-0	PRI0	R/W	0h	Port Priority Based Flow Control Threshold Clear Value for Priority 0

Copyright © 2025 Texas Instruments Incorporated

11.2.1.6.115 PN_TX_D_THRESH_CLR_H_REG Register (Offset = 0002218Ch) [Reset = X]

PN_TX_D_THRESH_CLR_H_REG is shown in Table 11-413.

Return to the Summary Table.

Enet Port N Tx PFC Destination Threshold Clr High

Table 11-413. PN_TX_D_THRESH_CLR_H_REG Register Field Descriptions

Bit	Field	Type	Reset	Description
31-29	RESERVED	R/W	X	
28-24	PRI7	R/W	0h	Port Priority Based Flow Control Threshold Clear Value for Priority 7
23-21	RESERVED	R/W	X	
20-16	PRI6	R/W	0h	Port Priority Based Flow Control Threshold Clear Value for Priority 6
15-13	RESERVED	R/W	X	
12-8	PRI5	R/W	0h	Port Priority Based Flow Control Threshold Clear Value for Priority 5
7-5	RESERVED	R/W	X	
4-0	PRI4	R/W	0h	Port Priority Based Flow Control Threshold Clear Value for Priority 4

Copyright © 2025 Texas Instruments Incorporated

11.2.1.6.116 PN_TX_G_BUF_THRESH_SET_L_REG Register (Offset = 00022190h) [Reset = X]

PN_TX_G_BUF_THRESH_SET_L_REG is shown in Table 11-414.

Return to the Summary Table.

Enet Port N Tx PFC Global Buffer Threshold Set Low

Table 11-414. PN_TX_G_BUF_THRESH_SET_L_REG Register Field Descriptions

Bit	Field	Type	Reset	Description
31-29	RESERVED	R/W	X	
28-24	PRI3	R/W	1Fh	Port Priority Based Flow Control Threshold Set Value for Priority 3
23-21	RESERVED	R/W	X	
20-16	PRI2	R/W	1Fh	Port Priority Based Flow Control Threshold Set Value for Priority 2
15-13	RESERVED	R/W	X	
12-8	PRI1	R/W	1Fh	Port Priority Based Flow Control Threshold Set Value for Priority 1
7-5	RESERVED	R/W	X	
4-0	PRI0	R/W	1Fh	Port Priority Based Flow Control Threshold Set Value for Priority 0

Copyright © 2025 Texas Instruments Incorporated

11.2.1.6.117 PN_TX_G_BUF_THRESH_SET_H_REG Register (Offset = 00022194h) [Reset = X]

PN_TX_G_BUF_THRESH_SET_H_REG is shown in Table 11-415.

Return to the Summary Table.

Enet Port N Tx PFC Global Buffer Threshold Set High

Table 11-415. PN_TX_G_BUF_THRESH_SET_H_REG Register Field Descriptions

Bit	Field	Type	Reset	Description
31-29	RESERVED	R/W	X	
28-24	PRI7	R/W	1Fh	Port Priority Based Flow Control Threshold Set Value for Priority 7
23-21	RESERVED	R/W	X	
20-16	PRI6	R/W	1Fh	Port Priority Based Flow Control Threshold Set Value for Priority 6
15-13	RESERVED	R/W	X	
12-8	PRI5	R/W	1Fh	Port Priority Based Flow Control Threshold Set Value for Priority 5
7-5	RESERVED	R/W	X	
4-0	PRI4	R/W	1Fh	Port Priority Based Flow Control Threshold Set Value for Priority 4

Copyright © 2025 Texas Instruments Incorporated

11.2.1.6.118 PN_TX_G_BUF_THRESH_CLR_L_REG Register (Offset = 00022198h) [Reset = X]

PN_TX_G_BUF_THRESH_CLR_L_REG is shown in Table 11-416.

Return to the Summary Table.

Enet Port N Tx PFC Global Buffer Threshold Clr Low

Table 11-416. PN_TX_G_BUF_THRESH_CLR_L_REG Register Field Descriptions

Bit	Field	Type	Reset	Description
31-29	RESERVED	R/W	X	
28-24	PRI3	R/W	0h	Port Priority Based Flow Control Threshold Clear Value for Priority 3
23-21	RESERVED	R/W	X	
20-16	PRI2	R/W	0h	Port Priority Based Flow Control Threshold Clear Value for Priority 2
15-13	RESERVED	R/W	X	
12-8	PRI1	R/W	0h	Port Priority Based Flow Control Threshold Clear Value for Priority 1
7-5	RESERVED	R/W	X	
4-0	PRI0	R/W	0h	Port Priority Based Flow Control Threshold Clear Value for Priority 0

Copyright © 2025 Texas Instruments Incorporated

11.2.1.6.119 PN_TX_G_BUF_THRESH_CLR_H_REG Register (Offset = 0002219Ch) [Reset = X]

PN_TX_G_BUF_THRESH_CLR_H_REG is shown in Table 11-417.

Return to the Summary Table.

Enet Port N Tx PFC Global Buffer Threshold Clr High

Table 11-417. PN_TX_G_BUF_THRESH_CLR_H_REG Register Field Descriptions

Bit	Field	Type	Reset	Description
31-29	RESERVED	R/W	X	
28-24	PRI7	R/W	0h	Port Priority Based Flow Control Threshold Clear Value for Priority 7
23-21	RESERVED	R/W	X	
20-16	PRI6	R/W	0h	Port Priority Based Flow Control Threshold Clear Value for Priority 6
15-13	RESERVED	R/W	X	
12-8	PRI5	R/W	0h	Port Priority Based Flow Control Threshold Clear Value for Priority 5
7-5	RESERVED	R/W	X	
4-0	PRI4	R/W	0h	Port Priority Based Flow Control Threshold Clear Value for Priority 4

Copyright © 2025 Texas Instruments Incorporated

11.2.1.6.120 PN_TX_D_OFLOW_ADDVAL_L_REG Register (Offset = 00022300h) [Reset = X]

PN_TX_D_OFLOW_ADDVAL_L_REG is shown in Table 11-418.

Return to the Summary Table.

Enet Port N Tx Destination Out Flow Add Values Low

Table 11-418. PN_TX_D_OFLOW_ADDVAL_L_REG Register Field Descriptions

Bit	Field	Type	Reset	Description
31-29	RESERVED	R/W	X	
28-24	PRI3	R/W	0h	Port PFC Destination Based Out Flow Add Value for Priority 3
23-21	RESERVED	R/W	X	
20-16	PRI2	R/W	0h	Port PFC Destination Based Out Flow Add Value for Priority 2
15-13	RESERVED	R/W	X	
12-8	PRI1	R/W	0h	Port PFC Destination Based Out Flow Add Value for Priority 1
7-5	RESERVED	R/W	X	
4-0	PRI0	R/W	0h	Port PFC Destination Based Out Flow Add Value for Priority 0

Copyright © 2025 Texas Instruments Incorporated

11.2.1.6.121 PN_TX_D_OFLOW_ADDVAL_H_REG Register (Offset = 00022304h) [Reset = X]

PN_TX_D_OFLOW_ADDVAL_H_REG is shown in Table 11-419.

Return to the Summary Table.

Enet Port N Tx Destination Out Flow Add Values High

Table 11-419. PN_TX_D_OFLOW_ADDVAL_H_REG Register Field Descriptions

Bit	Field	Type	Reset	Description
31-29	RESERVED	R/W	X	
28-24	PRI7	R/W	0h	Port PFC Destination Based Out Flow Add Value for Priority 7
23-21	RESERVED	R/W	X	
20-16	PRI6	R/W	0h	Port PFC Destination Based Out Flow Add Value for Priority 6
15-13	RESERVED	R/W	X	
12-8	PRI5	R/W	0h	Port PFC Destination Based Out Flow Add Value for Priority 5
7-5	RESERVED	R/W	X	
4-0	PRI4	R/W	0h	Port PFC Destination Based Out Flow Add Value for Priority 4

Copyright © 2025 Texas Instruments Incorporated

11.2.1.6.122 PN_SA_L_REG Register (Offset = 00022308h) [Reset = X]

PN_SA_L_REG is shown in Table 11-420.

Return to the Summary Table.

Enet Port N Tx Pause Frame Source Address Low

Table 11-420. PN_SA_L_REG Register Field Descriptions

Bit	Field	Type	Reset	Description
31-16	RESERVED	R/W	X	
15-8	MACSRCADDR_7_0	R/W	0h	Source Address Lower 8 bits
7-0	MACSRCADDR_15_8	R/W	0h	Source Address bits 15:8

Copyright © 2025 Texas Instruments Incorporated

11.2.1.6.123 PN_SA_H_REG Register (Offset = 0002230Ch) [Reset = 00000000h]

PN_SA_H_REG is shown in Table 11-421.

Return to the Summary Table.

Enet Port N Tx Pause Frame Source Address High

Table 11-421. PN_SA_H_REG Register Field Descriptions

Bit	Field	Type	Reset	Description
31-24	MACSRCADDR_23_16	R/W	0h	Source Address bits 23:16
23-16	MACSRCADDR_31_24	R/W	0h	Source Address bits 31:24
15-8	MACSRCADDR_39_32	R/W	0h	Source Address bits 39:32
7-0	MACSRCADDR_47_40	R/W	0h	Source Address bits 47:40

Copyright © 2025 Texas Instruments Incorporated

11.2.1.6.124 PN_TS_CTL_REG Register (Offset = 00022310h) [Reset = X]

PN_TS_CTL_REG is shown in Table 11-422.

Return to the Summary Table.

Enet Port N Time Sync Control

Table 11-422. PN_TS_CTL_REG Register Field Descriptions

Bit	Field	Type	Reset	Description
31-16	TS_MSG_TYPE_EN	R/W	0h	Time Sync Message Type Enable
15-12	RESERVED	R/W	X	
11	TS_TX_HOST_TS_EN	R/W	0h	Time Sync Transmit Host Time Stamp Enable
10	TS_TX_ANNEX_E_EN	R/W	0h	Time Synce Transmit Annex E Enable
9	TS_RX_ANNEX_E_EN	R/W	0h	Time Synce Receive Annex E Enable
8	TS_LTYPE2_EN	R/W	0h	Time Sync LTYPE 2 enable transmit and receive
7	TS_TX_ANNEX_D_EN	R/W	0h	Time Synce Transmit Annex D Enable
6	TS_TX_VLAN_LTYPE2_EN	R/W	0h	Time Sync Transmit VLAN LTYPE 2 enable
5	TS_TX_VLAN_LTYPE1_EN	R/W	0h	Time Sync Transmit VLAN LTYPE 1 enable
4	TS_TX_ANNEX_F_EN	R/W	0h	Time Synce Transmit Annex F Enable
3	TS_RX_ANNEX_D_EN	R/W	0h	Time Synce Receive Annex D Enable
2	TS_RX_VLAN_LTYPE2_EN	R/W	0h	Time Sync Receive VLAN LTYPE 2 enable
1	TS_RX_VLAN_LTYPE1_EN	R/W	0h	Time Sync Receive VLAN LTYPE 1 enable
0	TS_RX_ANNEX_F_EN	R/W	0h	Time Synce Receive Annex F Enable

Copyright © 2025 Texas Instruments Incorporated

11.2.1.6.125 PN_TS_SEQ_LTYPE_REG Register (Offset = 00022314h) [Reset = X]

PN_TS_SEQ_LTYPE_REG is shown in Table 11-423.

Return to the Summary Table.

Enet Port N Time Sync LTYPE (and SEQ_ID_OFFSET)

Table 11-423. PN_TS_SEQ_LTYPE_REG Register Field Descriptions

Bit	Field	Type	Reset	Description
31-22	RESERVED	R/W	X	
21-16	TS_SEQ_ID_OFFSET	R/W	1Eh	Time Sync Sequence ID Offset
15-0	TS_LTYPE1	R/W	0h	Time Sync LTYPE1

Copyright © 2025 Texas Instruments Incorporated

11.2.1.6.126 PN_TS_VLAN_LTYPE_REG Register (Offset = 00022318h) [Reset = 00000000h]

PN_TS_VLAN_LTYPE_REG is shown in Table 11-424.

Return to the Summary Table.

Enet Port N Time Sync VLAN2 and VLAN2

Table 11-424. PN_TS_VLAN_LTYPE_REG Register Field Descriptions

Bit	Field	Type	Reset	Description
31-16	TS_VLAN_LTYPE2	R/W	0h	Time Sync VLAN LTYPE2
15-0	TS_VLAN_LTYPE1	R/W	0h	Time Sync VLAN LTYPE1

Copyright © 2025 Texas Instruments Incorporated

11.2.1.6.127 PN_TS_CTL_LTYPE2_REG Register (Offset = 0002231Ch) [Reset = X]

PN_TS_CTL_LTYPE2_REG is shown in Table 11-425.

Return to the Summary Table.

Enet Port N Time Sync Control and LTYPE 2

Table 11-425. PN_TS_CTL_LTYPE2_REG Register Field Descriptions

Bit	Field	Type	Reset	Description
31-25	RESERVED	R/W	X	
24	TS_UNI_EN	R/W	0h	Time Sync Unicast Enable
23	TS_TTL_NONZERO	R/W	0h	Time Sync Time to Live Non-zero Enable
22	TS_320	R/W	0h	Time Sync Destination IP Address 320 Enable
21	TS_319	R/W	0h	Time Sync Destination IP Address 319 Enable
20	TS_132	R/W	0h	Time Sync Destination IP Address 132 Enable
19	TS_131	R/W	0h	Time Sync Destination IP Address 131 Enable
18	TS_130	R/W	0h	Time Sync Destination IP Address 130 Enable
17	TS_129	R/W	0h	Time Sync Destination IP Address 129 Enable
16	TS_107	R/W	0h	Time Sync Destination IP Address 107 Enable
15-0	TS_LTYPE2	R/W	0h	Time Sync LTYPE2

Copyright © 2025 Texas Instruments Incorporated

11.2.1.6.128 PN_TS_CTL2_REG Register (Offset = 00022320h) [Reset = X]

PN_TS_CTL2_REG is shown in Table 11-426.

Return to the Summary Table.

Enet Port N Time Sync Control 2

Table 11-426. PN_TS_CTL2_REG Register Field Descriptions

Bit	Field	Type	Reset	Description
31-22	RESERVED	R/W	X	
21-16	TS_DOMAIN_OFFSET	R/W	4h	Time Sync Domain Offset
15-0	TS_MCAST_TYPE_EN	R/W	0h	Time Sync Multicast Destination Address Type Enable

Copyright © 2025 Texas Instruments Incorporated

11.2.1.6.129 PN_MAC_CONTROL_REG Register (Offset = 00022330h) [Reset = X]

PN_MAC_CONTROL_REG is shown in Table 11-427.

Return to the Summary Table.

Enet Port N Mac Control

Table 11-427. PN_MAC_CONTROL_REG Register Field Descriptions

Bit	Field	Type	Reset	Description
31-25	RESERVED	R/W	X	
24	RX_CMF_EN	R/W	0h	RX Copy MAC Control Frames Enable
23	RX_CSF_EN	R/W	0h	RX Copy Short Frames Enable
22	RX_CEF_EN	R/W	0h	RX Copy Error Frames Enable
21	TX_SHORT_GAP_LIM_EN	R/W	0h	Transmit Short Gap Limit Enable
20	EXT_TX_FLOW_EN	R/W	0h	External Transmit Flow Control Enable
19	EXT_RX_FLOW_EN	R/W	0h	External Receive Flow Control Enable
18	EXT_EN	R/W	0h	External Enable
17	GIG_FORCE	R/W	0h	Gigabit Mode Force
16	IFCTL_B	R/W	0h	Interface Control B
15	IFCTL_A	R/W	0h	Interface Control A
14-13	RESERVED	R/W	X	
12	CRC_TYPE	R/W	0h	Port CRC Type
11	CMD_IDLE	R/W	0h	Command Idle
10	TX_SHORT_GAP_ENABLE	R/W	0h	Transmit Short Gap Enable
9-8	RESERVED	R/W	X	
7	GIG	R/W	0h	Gigabit Mode
6	TX_PACE	R/W	0h	Transmit Pacing Enable
5	GMII_EN	R/W	0h	GMII Enable
4	TX_FLOW_EN	R/W	0h	Transmit Flow Control Enable
3	RX_FLOW_EN	R/W	0h	Receive Flow Control Enable
2	MTEST	R/W	0h	Manufacturing Test Mode
1	LOOPBACK	R/W	0h	Loop Back Mode
0	FULLDUPLEX	R/W	0h	Full Duplex mode

Copyright © 2025 Texas Instruments Incorporated

11.2.1.6.130 PN_MAC_STATUS_REG Register (Offset = 00022334h) [Reset = X]

PN_MAC_STATUS_REG is shown in Table 11-428.

Return to the Summary Table.

Enet Port N Mac Status

Table 11-428. PN_MAC_STATUS_REG Register Field Descriptions

Bit	Field	Type	Reset	Description
31	IDLE	R	1h	cpxmac_sl IDLE
30	E_IDLE	R	1h	Express cpxmac_sl IDLE
29	RESERVED	R	X	
28	MAC_TX_IDLE	R	1h	Prempt and Express cpxmac_sl Transmit IDLE
27	TORF	R	0h	Top of receive FIFO flow control trigger occurred. This bit is write one to clear.
26-24	TORF_PRI	R	0h	The lowest priority that caused top of receive FIFO flow control trigger since the last write to clear. This field is write 0x7 to clear.
23-16	TX_PFC_FLOW_ACT	R	0h	Transmit Priority Based Flow Control Active (priority 7 down to 0)
15-8	RX_PFC_FLOW_ACT	R	0h	Receive Priority Based Flow Control Active (priority 7 down to 0)
7	RESERVED	R	X	
6	EXT_RX_FLOW_EN	R	0h	External Transmit Flow Control Enable
5	EXT_TX_FLOW_EN	R	0h	External Receive Flow Control Enable
4	EXT_GIG	R	0h	External GIG mode
3	EXT_FULLDUPLEX	R	0h	External Fullduplex
2	RESERVED	R	X	
1	RX_FLOW_ACT	R	0h	Receive Flow Control Active
0	TX_FLOW_ACT	R	0h	Transmit Flow Control Active

Copyright © 2025 Texas Instruments Incorporated

11.2.1.6.131 PN_MAC_SOFT_RESET_REG Register (Offset = 00022338h) [Reset = X]

PN_MAC_SOFT_RESET_REG is shown in Table 11-429.

Return to the Summary Table.

Enet Port N Mac Soft Reset

Table 11-429. PN_MAC_SOFT_RESET_REG Register Field Descriptions

Bit	Field	Type	Reset	Description
31-1	RESERVED	R/W	X	
0	SOFT_RESET	R/W	0h	Software reset

Copyright © 2025 Texas Instruments Incorporated

11.2.1.6.132 PN_MAC_BOFFTEST_REG Register (Offset = 0002233Ch) [Reset = X]

PN_MAC_BOFFTEST_REG is shown in Table 11-430.

Return to the Summary Table.

Enet Port N Mac Backoff Test

Table 11-430. PN_MAC_BOFFTEST_REG Register Field Descriptions

Bit	Field	Type	Reset	Description
31	RESERVED	R/W	X	
30-26	PACEVAL	R/W	0h	Pacing Register Current Value
25-16	RNDNUM	R/W	2C8h	Backoff Random Number Generator
15-12	COLL_COUNT	R	0h	Collision Count
11-10	RESERVED	R/W	X	
9-0	TX_BACKOFF	R	0h	Backoff Count

Copyright © 2025 Texas Instruments Incorporated

11.2.1.6.133 PN_MAC_RX_PAUSETIMER_REG Register (Offset = 00022340h) [Reset = X]

PN_MAC_RX_PAUSETIMER_REG is shown in Table 11-431.

Return to the Summary Table.

Enet Port N 802.3 Receive Pause Timer

Table 11-431. PN_MAC_RX_PAUSETIMER_REG Register Field Descriptions

Bit	Field	Type	Reset	Description
31-16	RESERVED	R/W	X	
15-0	RX_PAUSETIMER	R/W	0h	RX Pause Timer Value

Copyright © 2025 Texas Instruments Incorporated

11.2.1.6.134 PN_MAC_RXN_PAUSETIMER_REG_y Register (Offset = 00022350h + formula) [Reset = X]

PN_MAC_RXN_PAUSETIMER_REG_y is shown in Table 11-432.

Return to the Summary Table.

Enet Port N PFC Priority P Rx Pause Timer

Offset = 00022350h + (y * 4h); where y = 0h to 7h

Table 11-432. PN_MAC_RXN_PAUSETIMER_REG_y Register Field Descriptions

Bit	Field	Type	Reset	Description
31-16	RESERVED	R/W	X	
15-0	RX_PAUSETIMER	R/W	0h	RX Pause Timer Value

Copyright © 2025 Texas Instruments Incorporated

11.2.1.6.135 PN_MAC_TX_PAUSETIMER_REG Register (Offset = 00022370h) [Reset = X]

PN_MAC_TX_PAUSETIMER_REG is shown in Table 11-433.

Return to the Summary Table.

Enet Port N 802.3 Tx Pause Timer

Table 11-433. PN_MAC_TX_PAUSETIMER_REG Register Field Descriptions

Bit	Field	Type	Reset	Description
31-16	RESERVED	R/W	X	
15-0	TX_PAUSETIMER	R/W	0h	TX Pause Timer Value

Copyright © 2025 Texas Instruments Incorporated

11.2.1.6.136 PN_MAC_TXN_PAUSETIMER_REG_y Register (Offset = 00022380h + formula) [Reset = X]

PN_MAC_TXN_PAUSETIMER_REG_y is shown in Table 11-434.

Return to the Summary Table.

Enet Port N PFC Priority P Tx Pause Timer

Offset = 00022380h + (y * 4h); where y = 0h to 7h

Table 11-434. PN_MAC_TXN_PAUSETIMER_REG_y Register Field Descriptions

Bit	Field	Type	Reset	Description
31-16	RESERVED	R/W	X	
15-0	TX_PAUSETIMER	R/W	0h	TX Pause Timer Value

Copyright © 2025 Texas Instruments Incorporated

11.2.1.6.137 PN_MAC_EMCONTROL_REG Register (Offset = 000223A0h) [Reset = X]

PN_MAC_EMCONTROL_REG is shown in Table 11-435.

Return to the Summary Table.

Enet Port N Emulation Control

Table 11-435. PN_MAC_EMCONTROL_REG Register Field Descriptions

Bit	Field	Type	Reset	Description
31-2	RESERVED	R/W	X	
1	SOFT	R/W	0h	Emulation Soft Bit
0	FREE	R/W	0h	Emulation Free Bit

Copyright © 2025 Texas Instruments Incorporated

11.2.1.6.138 PN_MAC_TX_GAP_REG Register (Offset = 000223A4h) [Reset = X]

PN_MAC_TX_GAP_REG is shown in Table 11-436.

Return to the Summary Table.

Enet Port N Tx Inter Packet Gap

Table 11-436. PN_MAC_TX_GAP_REG Register Field Descriptions

Bit	Field	Type	Reset	Description
31-16	RESERVED	R/W	X	
15-0	TX_GAP	R/W	Ch	Transmit Inter-Packet Gap

Copyright © 2025 Texas Instruments Incorporated

11.2.1.6.139 PN_INTERVLAN_OPX_POINTER_REG Register (Offset = 000223ACh) [Reset = X]

PN_INTERVLAN_OPX_POINTER_REG is shown in Table 11-437.

Return to the Summary Table.

Enet Port N Tx Egress InterVLAN Operation Pointer

Table 11-437. PN_INTERVLAN_OPX_POINTER_REG Register Field Descriptions

Bit	Field	Type	Reset	Description
31-3	RESERVED	R/W	X	
2-0	INTERVLAN_OPX_POINTER	R/W	0h	Egress InterVLAN Operation Pointer

Copyright © 2025 Texas Instruments Incorporated

11.2.1.6.140 PN_INTERVLAN_OPX_A_REG Register (Offset = 000223B0h) [Reset = 00000000h]

PN_INTERVLAN_OPX_A_REG is shown in Table 11-438.

Return to the Summary Table.

Enet Port N Tx Egress InterVLAN A

Table 11-438. PN_INTERVLAN_OPX_A_REG Register Field Descriptions

Bit	Field	Type	Reset	Description
31-0	INTERVLAN_OPX_A	R/W	0h	Egress InterVLAN A

Copyright © 2025 Texas Instruments Incorporated

11.2.1.6.141 PN_INTERVLAN_OPX_B_REG Register (Offset = 000223B4h) [Reset = 00000000h]

PN_INTERVLAN_OPX_B_REG is shown in Table 11-439.

Return to the Summary Table.

Enet Port N Tx Egress InterVLAN B

Table 11-439. PN_INTERVLAN_OPX_B_REG Register Field Descriptions

Bit	Field	Type	Reset	Description
31-0	INTERVLAN_OPX_B	R/W	0h	Egress InterVLAN B

Copyright © 2025 Texas Instruments Incorporated

11.2.1.6.142 PN_INTERVLAN_OPX_C_REG Register (Offset = 000223B8h) [Reset = 00000000h]

PN_INTERVLAN_OPX_C_REG is shown in Table 11-440.

Return to the Summary Table.

Enet Port N Tx Egress InterVLAN C

Table 11-440. PN_INTERVLAN_OPX_C_REG Register Field Descriptions

Bit	Field	Type	Reset	Description
31-0	INTERVLAN_OPX_C	R/W	0h	Egress InterVLAN C

Copyright © 2025 Texas Instruments Incorporated

11.2.1.6.143 PN_INTERVLAN_OPX_D_REG Register (Offset = 000223BCh) [Reset = X]

PN_INTERVLAN_OPX_D_REG is shown in Table 11-441.

Return to the Summary Table.

Enet Port N Tx Egress InterVLAN D

Table 11-441. PN_INTERVLAN_OPX_D_REG Register Field Descriptions

Bit	Field	Type	Reset	Description
31-16	RESERVED	R/W	X	
15-0	INTERVLAN_OPX_D	R/W	0h	Egress InterVLAN D

Copyright © 2025 Texas Instruments Incorporated

11.2.1.6.144 FETCH_LOC_y Register (Offset = 00032000h + formula) [Reset = X]

FETCH_LOC_y is shown in Table 11-442.

Return to the Summary Table.

The Revision Register contains the ID and revision information.

Offset = 00032000h + (y * 4h); where y = 0h to 7Fh

Table 11-442. FETCH_LOC_y Register Field Descriptions

Bit	Field	Type	Reset	Description
31-22	RESERVED	R/W	X	
21-0	LOC	R/W	0h	RAM Location

Copyright © 2025 Texas Instruments Incorporated

11.2.1.6.145 CPDMA_FH_IDVER_REG Register (Offset = 00034000h) [Reset = 0018010Ah]

CPDMA_FH_IDVER_REG is shown in Table 11-443.

Return to the Summary Table.

CPDMA Transmit IDVER

Table 11-443. CPDMA_FH_IDVER_REG Register Field Descriptions

Bit	Field	Type	Reset	Description
31-0	FH_IDVER	R	0018010Ah	CPDMA Transmit IDVER

Copyright © 2025 Texas Instruments Incorporated

11.2.1.6.146 CPDMA_FH_CONTROL_REG Register (Offset = 00034004h) [Reset = X]

CPDMA_FH_CONTROL_REG is shown in Table 11-444.

Return to the Summary Table.

CPDMA Transmit Control Register

Table 11-444. CPDMA_FH_CONTROL_REG Register Field Descriptions

Bit	Field	Type	Reset	Description
31-1	RESERVED	R/W	X	
0	FH_EN	R/W	0h	CPDMA Transmit DMA Enable

Copyright © 2025 Texas Instruments Incorporated

11.2.1.6.147 CPDMA_FH_TEARDOWN_REG Register (Offset = 00034008h) [Reset = X]

CPDMA_FH_TEARDOWN_REG is shown in Table 11-445.

Return to the Summary Table.

CPDMA Transmit Teardown Register

Table 11-445. CPDMA_FH_TEARDOWN_REG Register Field Descriptions

Bit	Field	Type	Reset	Description
31	FH_TDN_RDY	R/W	0h	CPDMA Transmit Teardown Ready
30-3	RESERVED	R/W	X	
2-0	FH_TDN_CH	R/W	0h	CPDMA Transmit Teardown Channel

Copyright © 2025 Texas Instruments Incorporated

11.2.1.6.148 CPDMA_TH_IDVER_REG Register (Offset = 00034010h) [Reset = 0018010Ah]

CPDMA_TH_IDVER_REG is shown in Table 11-446.

Return to the Summary Table.

CPDMA Receive IDVER

Table 11-446. CPDMA_TH_IDVER_REG Register Field Descriptions

Bit	Field	Type	Reset	Description
31-0	TH_IDVER	R	0018010Ah	CPDMA Receive IDVER

Copyright © 2025 Texas Instruments Incorporated

11.2.1.6.149 CPDMA_TH_CONTROL_REG Register (Offset = 00034014h) [Reset = X]

CPDMA_TH_CONTROL_REG is shown in Table 11-447.

Return to the Summary Table.

CPDMA Receive Control Register

Table 11-447. CPDMA_TH_CONTROL_REG Register Field Descriptions

Bit	Field	Type	Reset	Description
31-1	RESERVED	R/W	X	
0	TH_EN	R/W	0h	CPDMA Receive DMA Enable

Copyright © 2025 Texas Instruments Incorporated

11.2.1.6.150 CPDMA_TH_TEARDOWN_REG Register (Offset = 00034018h) [Reset = X]

CPDMA_TH_TEARDOWN_REG is shown in Table 11-448.

Return to the Summary Table.

CPDMA Receive Teardown Register

Table 11-448. CPDMA_TH_TEARDOWN_REG Register Field Descriptions

Bit	Field	Type	Reset	Description
31	TH_TDN_RDY	R/W	0h	CPDMA Receive Teardown Ready
30-3	RESERVED	R/W	X	
2-0	TH_TDN_CH	R/W	0h	CPDMA Receive Teardown Channel

Copyright © 2025 Texas Instruments Incorporated

11.2.1.6.151 CPDMA_SOFT_RESET_REG Register (Offset = 0003401Ch) [Reset = X]

CPDMA_SOFT_RESET_REG is shown in Table 11-449.

Return to the Summary Table.

CPDMA Soft Reset Register

Table 11-449. CPDMA_SOFT_RESET_REG Register Field Descriptions

Bit	Field	Type	Reset	Description
31-1	RESERVED	R/W	X	
0	SOFT_RESET	R/W	0h	CPDMA and CPSW Soft Reset Enable

Copyright © 2025 Texas Instruments Incorporated

11.2.1.6.152 CPDMA_CONTROL_REG Register (Offset = 00034020h) [Reset = X]

CPDMA_CONTROL_REG is shown in Table 11-450.

Return to the Summary Table.

CPDMA Control Register

Table 11-450. CPDMA_CONTROL_REG Register Field Descriptions

Bit	Field	Type	Reset	Description
31-7	RESERVED	R/W	X	
6	TH_TS_ENCAP	R/W	0h	CPDMA Receive TimeStamp Encapsulated
5	TH_VLAN_ENCAP	R/W	0h	CPDMA Receive VLAN Encapsulated
4	TH_CEF	R/W	0h	CPDMA Receive Copy Error Frames
3	CMD_IDLE	R/W	0h	CPDMA Command Idle
2	TH_OFFLEN_BLOCK	R/W	0h	CPDMA Receive Offset/Length Word Write Block
1	TH_OWNERSHIP	R/W	0h	CPDMA Receive Ownership Write Bit Value
0	FH_PTYPE	R/W	0h	CPDMA Transmit Queue Priority Type

Copyright © 2025 Texas Instruments Incorporated

11.2.1.6.153 CPDMA_STATUS_REG Register (Offset = 00034024h) [Reset = X]

CPDMA_STATUS_REG is shown in Table 11-451.

Return to the Summary Table.

CPDMA Status Register

Table 11-451. CPDMA_STATUS_REG Register Field Descriptions

Bit	Field	Type	Reset	Description
31	IDLE	R	1h	Idle Status Bit – Indicates when set that the CPDMA is not transferring a packet FHost or THost.
30-24	RESERVED	R	X	read as zero
23-20	fhost_err_code	R	0h	0000 – No error 0001 – SOP error. 0010 – Ownership bit not set in SOP buffer. 0011 – Zero Next Buffer Descriptor Pointer Without EOP 0100 – Zero Buffer Pointer. 0101 – Zero Buffer Length 0110 – Packet Length Error (sum of buffers < packet length) 0111 – reserved … 1111 – reserved
19	RESERVED	R	X	
18-16	fhost_err_ch	R	0h	FHost Error Channel – This field indicates which FHost channel had a host error. 000 – The host error occurred on TX channel 0 … 111 – The host error occurred on TX channel 7
15-12	thost_host_err_code	R	0h	0000 – No error 0001 – reserved 0010 – Ownership bit not set in input buffer. 0011 – reserved 0100 – Zero Buffer Pointer. 0101 – Zero buffer length on non-SOP descriptor 0110 – SOP buffer length not greater than offset … 1111 – reserved
11	RESERVED	R	X	read as zero
10-8	thost_err_ch	R	0h	THost Host Error Channel – This field indicates which THost channel had a host error. 000 – The host error occurred on THost channel 0 … 111 – The host error occurred on RX channel 7
7-0	RESERVED	R	X	read as zero

Copyright © 2025 Texas Instruments Incorporated

11.2.1.6.154 CPDMA_TH_BUFFER_OFFSET_REG Register (Offset = 00034028h) [Reset = X]

CPDMA_TH_BUFFER_OFFSET_REG is shown in Table 11-452.

Return to the Summary Table.

CPDMA Receive Buffer Offset Register

Table 11-452. CPDMA_TH_BUFFER_OFFSET_REG Register Field Descriptions

Bit	Field	Type	Reset	Description
31-11	RESERVED	R/W	X	
10-0	TH_BUFFER_OFFSET	R/W	0h	CPDMA Receive Buffer Offset Register

Copyright © 2025 Texas Instruments Incorporated

11.2.1.6.155 CPDMA_EMULATION_CONTROL_REG Register (Offset = 0003402Ch) [Reset = X]

CPDMA_EMULATION_CONTROL_REG is shown in Table 11-453.

Return to the Summary Table.

CPDMA Receive Buffer Offset Register

Table 11-453. CPDMA_EMULATION_CONTROL_REG Register Field Descriptions

Bit	Field	Type	Reset	Description
31-2	RESERVED	R/W	X	
1	FREE	R/W	0h	CPDMA Receive Buffer Offset Register
0	SOFT	R/W	0h	CPDMA Receive Buffer Offset Register

Copyright © 2025 Texas Instruments Incorporated

11.2.1.6.156 CPDMA_FH_INTSTAT_RAW_REG Register (Offset = 00034080h) [Reset = X]

CPDMA_FH_INTSTAT_RAW_REG is shown in Table 11-454.

Return to the Summary Table.

CPDMA FHost Interrupt Status RAW

Table 11-454. CPDMA_FH_INTSTAT_RAW_REG Register Field Descriptions

Bit	Field	Type	Reset	Description
31-8	RESERVED	R	X	
7	FH7_PEND_RAW	R	0h	CPDMA FHost Channel 7 Interrupt Pending RAW
6	FH6_PEND_RAW	R	0h	CPDMA FHost Channel 6 Interrupt Pending RAW
5	FH5_PEND_RAW	R	0h	CPDMA FHost Channel 5 Interrupt Pending RAW
4	FH4_PEND_RAW	R	0h	CPDMA FHost Channel 4 Interrupt Pending RAW
3	FH3_PEND_RAW	R	0h	CPDMA FHost Channel 3 Interrupt Pending RAW
2	FH2_PEND_RAW	R	0h	CPDMA FHost Channel 2 Interrupt Pending RAW
1	FH1_PEND_RAW	R	0h	CPDMA FHost Channel 1 Interrupt Pending RAW
0	FH0_PEND_RAW	R	0h	CPDMA FHost Channel 0 Interrupt Pending RAW

Copyright © 2025 Texas Instruments Incorporated

11.2.1.6.157 CPDMA_FH_INTSTAT_MASKED_REG Register (Offset = 00034084h) [Reset = X]

CPDMA_FH_INTSTAT_MASKED_REG is shown in Table 11-455.

Return to the Summary Table.

CPDMA FHost Interrupt Status MASKED

Table 11-455. CPDMA_FH_INTSTAT_MASKED_REG Register Field Descriptions

Bit	Field	Type	Reset	Description
31-8	RESERVED	R	X	
7	FH7_PEND_MASKED	R	0h	CPDMA FHost Channel 7 Interrupt Pending MASKED
6	FH6_PEND_MASKED	R	0h	CPDMA FHost Channel 6 Interrupt Pending MASKED
5	FH5_PEND_MASKED	R	0h	CPDMA FHost Channel 5 Interrupt Pending MASKED
4	FH4_PEND_MASKED	R	0h	CPDMA FHost Channel 4 Interrupt Pending MASKED
3	FH3_PEND_MASKED	R	0h	CPDMA FHost Channel 3 Interrupt Pending MASKED
2	FH2_PEND_MASKED	R	0h	CPDMA FHost Channel 2 Interrupt Pending MASKED
1	FH1_PEND_MASKED	R	0h	CPDMA FHost Channel 1 Interrupt Pending MASKED
0	FH0_PEND_MASKED	R	0h	CPDMA FHost Channel 0 Interrupt Pending MASKED

Copyright © 2025 Texas Instruments Incorporated

11.2.1.6.158 CPDMA_FH_INTSTAT_MASKED_SET_REG Register (Offset = 00034088h) [Reset = X]

CPDMA_FH_INTSTAT_MASKED_SET_REG is shown in Table 11-456.

Return to the Summary Table.

CPDMA FHost Interrupt Masked SET

Table 11-456. CPDMA_FH_INTSTAT_MASKED_SET_REG Register Field Descriptions

Bit	Field	Type	Reset	Description
31-8	RESERVED	R/W	X	
7	FH7_PEND_MASKED_SET	R/W1S	0h	CPDMA FHost Channel 7 Interrupt Pending MASKED Set
6	FH6_PEND_MASKED_SET	R/W1S	0h	CPDMA FHost Channel 6 Interrupt Pending MASKED Set
5	FH5_PEND_MASKED_SET	R/W1S	0h	CPDMA FHost Channel 5 Interrupt Pending MASKED Set
4	FH4_PEND_MASKED_SET	R/W1S	0h	CPDMA FHost Channel 4 Interrupt Pending MASKED Set
3	FH3_PEND_MASKED_SET	R/W1S	0h	CPDMA FHost Channel 3 Interrupt Pending MASKED Set
2	FH2_PEND_MASKED_SET	R/W1S	0h	CPDMA FHost Channel 2 Interrupt Pending MASKED Set
1	FH1_PEND_MASKED_SET	R/W1S	0h	CPDMA FHost Channel 1 Interrupt Pending MASKED Set
0	FH0_PEND_MASKED_SET	R/W1S	0h	CPDMA FHost Channel 0 Interrupt Pending MASKED Set

Copyright © 2025 Texas Instruments Incorporated

11.2.1.6.159 CPDMA_FH_INTSTAT_MASKED_CLR_REG Register (Offset = 0003408Ch) [Reset = X]

CPDMA_FH_INTSTAT_MASKED_CLR_REG is shown in Table 11-457.

Return to the Summary Table.

CPDMA FHost Interrupt Masked CLR

Table 11-457. CPDMA_FH_INTSTAT_MASKED_CLR_REG Register Field Descriptions

Bit	Field	Type	Reset	Description
31-8	RESERVED	R/W	X	
7	FH7_PEND_MASKED_CLR	R/W1C	0h	CPDMA FHost Channel 7 Interrupt Pending MASKED Clr
6	FH6_PEND_MASKED_CLR	R/W1C	0h	CPDMA FHost Channel 6 Interrupt Pending MASKED Clr
5	FH5_PEND_MASKED_CLR	R/W1C	0h	CPDMA FHost Channel 5 Interrupt Pending MASKED Clr
4	FH4_PEND_MASKED_CLR	R/W1C	0h	CPDMA FHost Channel 4 Interrupt Pending MASKED Clr
3	FH3_PEND_MASKED_CLR	R/W1C	0h	CPDMA FHost Channel 3 Interrupt Pending MASKED Clr
2	FH2_PEND_MASKED_CLR	R/W1C	0h	CPDMA FHost Channel 2 Interrupt Pending MASKED Clr
1	FH1_PEND_MASKED_CLR	R/W1C	0h	CPDMA FHost Channel 1 Interrupt Pending MASKED Clr
0	FH0_PEND_MASKED_CLR	R/W1C	0h	CPDMA FHost Channel 0 Interrupt Pending MASKED Clr

Copyright © 2025 Texas Instruments Incorporated

11.2.1.6.160 CPDMA_IN_VECTOR_REG Register (Offset = 00034090h) [Reset = 00000000h]

CPDMA_IN_VECTOR_REG is shown in Table 11-458.

Return to the Summary Table.

CPDMA DMA IN Vector

Table 11-458. CPDMA_IN_VECTOR_REG Register Field Descriptions

Bit	Field	Type	Reset	Description
31-0	DMA_IN_VECTOR	R	0h	CPDMA DMA IN Vector

Copyright © 2025 Texas Instruments Incorporated

11.2.1.6.161 CPDMA_EOI_VECTOR_REG Register (Offset = 00034094h) [Reset = X]

CPDMA_EOI_VECTOR_REG is shown in Table 11-459.

Return to the Summary Table.

CPDMA DMA EOI Vector

Table 11-459. CPDMA_EOI_VECTOR_REG Register Field Descriptions

Bit	Field	Type	Reset	Description
31-5	RESERVED	R/W	X	
4-0	DMA_EOI_VECTOR	R/W	0h	CPDMA DMA EOI Vector

Copyright © 2025 Texas Instruments Incorporated

11.2.1.6.162 CPDMA_TH_INTSTAT_RAW_REG Register (Offset = 000340A0h) [Reset = X]

CPDMA_TH_INTSTAT_RAW_REG is shown in Table 11-460.

Return to the Summary Table.

CPDMA Receive Interrupt Status RAW

Table 11-460. CPDMA_TH_INTSTAT_RAW_REG Register Field Descriptions

Bit	Field	Type	Reset	Description
31-16	RESERVED	R	X	
15	TH7_THRESH_PEND_RAW	R	0h	CPDMA Receive Channel 7 Threshold Interrupt Pending RAW
14	TH6_THRESH_PEND_RAW	R	0h	CPDMA Receive Channel 6 Threshold Interrupt Pending RAW
13	TH5_THRESH_PEND_RAW	R	0h	CPDMA Receive Channel 5 Threshold Interrupt Pending RAW
12	TH4_THRESH_PEND_RAW	R	0h	CPDMA Receive Channel 4 Threshold Interrupt Pending RAW
11	TH3_THRESH_PEND_RAW	R	0h	CPDMA Receive Channel 3 Threshold Interrupt Pending RAW
10	TH2_THRESH_PEND_RAW	R	0h	CPDMA Receive Channel 2 Threshold Interrupt Pending RAW
9	TH1_THRESH_PEND_RAW	R	0h	CPDMA Receive Channel 1 Threshold Interrupt Pending RAW
8	TH0_THRESH_PEND_RAW	R	0h	CPDMA Receive Channel 0 Threshold Interrupt Pending RAW
7	TH7_PEND_RAW	R	0h	CPDMA Receive Channel 7 Interrupt Pending RAW
6	TH6_PEND_RAW	R	0h	CPDMA Receive Channel 6 Interrupt Pending RAW
5	TH5_PEND_RAW	R	0h	CPDMA Receive Channel 5 Interrupt Pending RAW
4	TH4_PEND_RAW	R	0h	CPDMA Receive Channel 4 Interrupt Pending RAW
3	TH3_PEND_RAW	R	0h	CPDMA Receive Channel 3 Interrupt Pending RAW
2	TH2_PEND_RAW	R	0h	CPDMA Receive Channel 2 Interrupt Pending RAW
1	TH1_PEND_RAW	R	0h	CPDMA Receive Channel 1 Interrupt Pending RAW
0	TH0_PEND_RAW	R	0h	CPDMA Receive Channel 0 Interrupt Pending RAW

Copyright © 2025 Texas Instruments Incorporated

11.2.1.6.163 CPDMA_TH_INTSTAT_MASKED_REG Register (Offset = 000340A4h) [Reset = X]

CPDMA_TH_INTSTAT_MASKED_REG is shown in Table 11-461.

Return to the Summary Table.

CPDMA Receive Interrupt Status MASKED

Table 11-461. CPDMA_TH_INTSTAT_MASKED_REG Register Field Descriptions

Bit	Field	Type	Reset	Description
31-16	RESERVED	R	X	
15	TH7_THRESH_PEND_MASKED	R	0h	CPDMA Receive Channel 7 Threshold Interrupt Pending MASKED
14	TH6_THRESH_PEND_MASKED	R	0h	CPDMA Receive Channel 6 Threshold Interrupt Pending MASKED
13	TH5_THRESH_PEND_MASKED	R	0h	CPDMA Receive Channel 5 Threshold Interrupt Pending MASKED
12	TH4_THRESH_PEND_MASKED	R	0h	CPDMA Receive Channel 4 Threshold Interrupt Pending MASKED
11	TH3_THRESH_PEND_MASKED	R	0h	CPDMA Receive Channel 3 Threshold Interrupt Pending MASKED
10	TH2_THRESH_PEND_MASKED	R	0h	CPDMA Receive Channel 2 Threshold Interrupt Pending MASKED
9	TH1_THRESH_PEND_MASKED	R	0h	CPDMA Receive Channel 1 Threshold Interrupt Pending MASKED
8	TH0_THRESH_PEND_MASKED	R	0h	CPDMA Receive Channel 0 Threshold Interrupt Pending MASKED
7	TH7_PEND_MASKED	R	0h	CPDMA Receive Channel 7 Interrupt Pending MASKED
6	TH6_PEND_MASKED	R	0h	CPDMA Receive Channel 6 Interrupt Pending MASKED
5	TH5_PEND_MASKED	R	0h	CPDMA Receive Channel 5 Interrupt Pending MASKED
4	TH4_PEND_MASKED	R	0h	CPDMA Receive Channel 4 Interrupt Pending MASKED
3	TH3_PEND_MASKED	R	0h	CPDMA Receive Channel 3 Interrupt Pending MASKED
2	TH2_PEND_MASKED	R	0h	CPDMA Receive Channel 2 Interrupt Pending MASKED
1	TH1_PEND_MASKED	R	0h	CPDMA Receive Channel 1 Interrupt Pending MASKED
0	TH0_PEND_MASKED	R	0h	CPDMA Receive Channel 0 Interrupt Pending MASKED

Copyright © 2025 Texas Instruments Incorporated

11.2.1.6.164 CPDMA_TH_INTSTAT_SET_REG Register (Offset = 000340A8h) [Reset = X]

CPDMA_TH_INTSTAT_SET_REG is shown in Table 11-462.

Return to the Summary Table.

CPDMA THost Interrupt Masked SET

Table 11-462. CPDMA_TH_INTSTAT_SET_REG Register Field Descriptions

Bit	Field	Type	Reset	Description
31-16	RESERVED	R/W	X	
15	TH7_THRESH_PEND_MASKED_SET	R/W1S	0h	CPDMA THost Channel 7 Threshold Interrupt Pending SET
14	TH6_THRESH_PEND_MASKED_SET	R/W1S	0h	CPDMA THost Channel 6 Threshold Interrupt Pending SET
13	TH5_THRESH_PEND_MASKED_SET	R/W1S	0h	CPDMA THost Channel 5 Threshold Interrupt Pending SET
12	TH4_THRESH_PEND_MASKED_SET	R/W1S	0h	CPDMA THost Channel 4 Threshold Interrupt Pending SET
11	TH3_THRESH_PEND_MASKED_SET	R/W1S	0h	CPDMA THost Channel 3 Threshold Interrupt Pending SET
10	TH2_THRESH_PEND_MASKED_SET	R/W1S	0h	CPDMA THost Channel 2 Threshold Interrupt Pending SET
9	TH1_THRESH_PEND_MASKED_SET	R/W1S	0h	CPDMA THost Channel 1 Threshold Interrupt Pending SET
8	TH0_THRESH_PEND_MASKED_SET	R/W1S	0h	CPDMA THost Channel 0 Threshold Interrupt Pending SET
7	TH7_PEND_MASKED_SET	R/W1S	0h	CPDMA THost Channel 7 Interrupt Pending SET
6	TH6_PEND_MASKED_SET	R/W1S	0h	CPDMA THost Channel 6 Interrupt Pending SET
5	TH5_PEND_MASKED_SET	R/W1S	0h	CPDMA THost Channel 5 Interrupt Pending SET
4	TH4_PEND_MASKED_SET	R/W1S	0h	CPDMA THost Channel 4 Interrupt Pending SET
3	TH3_PEND_MASKED_SET	R/W1S	0h	CPDMA THost Channel 3 Interrupt Pending SET
2	TH2_PEND_MASKED_SET	R/W1S	0h	CPDMA THost Channel 2 Interrupt Pending SET
1	TH1_PEND_MASKED_SET	R/W1S	0h	CPDMA THost Channel 1 Interrupt Pending SET
0	TH0_PEND_MASKED_SET	R/W1S	0h	CPDMA THost Channel 0 Interrupt Pending SET

Copyright © 2025 Texas Instruments Incorporated

11.2.1.6.165 CPDMA_TH_INTSTAT_CLR_REG Register (Offset = 000340ACh) [Reset = X]

CPDMA_TH_INTSTAT_CLR_REG is shown in Table 11-463.

Return to the Summary Table.

CPDMA THost Interrupt Masked CLR

Table 11-463. CPDMA_TH_INTSTAT_CLR_REG Register Field Descriptions

Bit	Field	Type	Reset	Description
31-16	RESERVED	R/W	X	
15	TH7_THRESH_PEND_MASKED_CLR	R/W1C	0h	CPDMA THost Channel 7 Threshold Interrupt Pending CLR
14	TH6_THRESH_PEND_MASKED_CLR	R/W1C	0h	CPDMA THost Channel 6 Threshold Interrupt Pending CLR
13	TH5_THRESH_PEND_MASKED_CLR	R/W1C	0h	CPDMA THost Channel 5 Threshold Interrupt Pending CLR
12	TH4_THRESH_PEND_MASKED_CLR	R/W1C	0h	CPDMA THost Channel 4 Threshold Interrupt Pending CLR
11	TH3_THRESH_PEND_MASKED_CLR	R/W1C	0h	CPDMA THost Channel 3 Threshold Interrupt Pending CLR
10	TH2_THRESH_PEND_MASKED_CLR	R/W1C	0h	CPDMA THost Channel 2 Threshold Interrupt Pending CLR
9	TH1_THRESH_PEND_MASKED_CLR	R/W1C	0h	CPDMA THost Channel 1 Threshold Interrupt Pending CLR
8	TH0_THRESH_PEND_MASKED_CLR	R/W1C	0h	CPDMA THost Channel 0 Threshold Interrupt Pending CLR
7	TH7_PEND_MASKED_CLR	R/W1C	0h	CPDMA THost Channel 7 Interrupt Pending CLR
6	TH6_PEND_MASKED_CLR	R/W1C	0h	CPDMA THost Channel 6 Interrupt Pending CLR
5	TH5_PEND_MASKED_CLR	R/W1C	0h	CPDMA THost Channel 5 Interrupt Pending CLR
4	TH4_PEND_MASKED_CLR	R/W1C	0h	CPDMA THost Channel 4 Interrupt Pending CLR
3	TH3_PEND_MASKED_CLR	R/W1C	0h	CPDMA THost Channel 3 Interrupt Pending CLR
2	TH2_PEND_MASKED_CLR	R/W1C	0h	CPDMA THost Channel 2 Interrupt Pending CLR
1	TH1_PEND_MASKED_CLR	R/W1C	0h	CPDMA THost Channel 1 Interrupt Pending CLR
0	TH0_PEND_MASKED_CLR	R/W1C	0h	CPDMA THost Channel 0 Interrupt Pending CLR

Copyright © 2025 Texas Instruments Incorporated

11.2.1.6.166 CPDMA_INTSTAT_RAW_REG Register (Offset = 000340B0h) [Reset = X]

CPDMA_INTSTAT_RAW_REG is shown in Table 11-464.

Return to the Summary Table.

CPDMA DMA Interrupt Status RAW

Table 11-464. CPDMA_INTSTAT_RAW_REG Register Field Descriptions

Bit	Field	Type	Reset	Description
31-2	RESERVED	R	X	
1	HOST_PEND_RAW	R	0h	CPDMA HOST Interrupt Pending RAW
0	RESERVED	R	X	

Copyright © 2025 Texas Instruments Incorporated

11.2.1.6.167 CPDMA_INTSTAT_MASKED_REG Register (Offset = 000340B4h) [Reset = X]

CPDMA_INTSTAT_MASKED_REG is shown in Table 11-465.

Return to the Summary Table.

CPDMA DMA Interrupt Status MASKED

Table 11-465. CPDMA_INTSTAT_MASKED_REG Register Field Descriptions

Bit	Field	Type	Reset	Description
31-2	RESERVED	R	X	
1	HOST_PEND	R	0h	CPDMA HOST Interrupt Pending MASKED
0	RESERVED	R	X	

Copyright © 2025 Texas Instruments Incorporated

11.2.1.6.168 CPDMA_INTSTAT_SET_REG Register (Offset = 000340B8h) [Reset = X]

CPDMA_INTSTAT_SET_REG is shown in Table 11-466.

Return to the Summary Table.

CPDMA DMA Interrupt Status SET

Table 11-466. CPDMA_INTSTAT_SET_REG Register Field Descriptions

Bit	Field	Type	Reset	Description
31-2	RESERVED	R/W	X	
1	HOST_PEND_MASKED_SET	R/W1S	0h	CPDMA HOST Interrupt Masked SET
0	RESERVED	R/W	X	

Copyright © 2025 Texas Instruments Incorporated

11.2.1.6.169 CPDMA_INTSTAT_CLR_REG Register (Offset = 000340BCh) [Reset = X]

CPDMA_INTSTAT_CLR_REG is shown in Table 11-467.

Return to the Summary Table.

CPDMA DMA Interrupt Status CLR

Table 11-467. CPDMA_INTSTAT_CLR_REG Register Field Descriptions

Bit	Field	Type	Reset	Description
31-2	RESERVED	R/W	X	
1	HOST_PEND_MASKED_CLR	R/W1S	0h	CPDMA HOST Interrupt Masked CLR
0	RESERVED	R/W	X	

Copyright © 2025 Texas Instruments Incorporated

11.2.1.6.170 CPDMA_TH0_PENDTHRESH_REG Register (Offset = 000340C0h) [Reset = X]

CPDMA_TH0_PENDTHRESH_REG is shown in Table 11-468.

Return to the Summary Table.

CPDMA THost Threshold Pending Register

Table 11-468. CPDMA_TH0_PENDTHRESH_REG Register Field Descriptions

Bit	Field	Type	Reset	Description
31-8	RESERVED	R/W	X	
7-0	TH0_PENDTHRESH	R/W	0h	CPDMA THost Threshold Pending Register

Copyright © 2025 Texas Instruments Incorporated

11.2.1.6.171 CPDMA_TH1_PENDTHRESH_REG Register (Offset = 000340C4h) [Reset = X]

CPDMA_TH1_PENDTHRESH_REG is shown in Table 11-469.

Return to the Summary Table.

CPDMA THost Threshold Pending Register

Table 11-469. CPDMA_TH1_PENDTHRESH_REG Register Field Descriptions

Bit	Field	Type	Reset	Description
31-8	RESERVED	R/W	X	
7-0	TH1_PENDTHRESH	R/W	0h	CPDMA THost Threshold Pending Register

Copyright © 2025 Texas Instruments Incorporated

11.2.1.6.172 CPDMA_TH2_PENDTHRESH_REG Register (Offset = 000340C8h) [Reset = X]

CPDMA_TH2_PENDTHRESH_REG is shown in Table 11-470.

Return to the Summary Table.

CPDMA THost Threshold Pending Register

Table 11-470. CPDMA_TH2_PENDTHRESH_REG Register Field Descriptions

Bit	Field	Type	Reset	Description
31-8	RESERVED	R/W	X	
7-0	TH2_PENDTHRESH	R/W	0h	CPDMA THost Threshold Pending Register

Copyright © 2025 Texas Instruments Incorporated

11.2.1.6.173 CPDMA_TH3_PENDTHRESH_REG Register (Offset = 000340CCh) [Reset = X]

CPDMA_TH3_PENDTHRESH_REG is shown in Table 11-471.

Return to the Summary Table.

CPDMA THost Threshold Pending Register

Table 11-471. CPDMA_TH3_PENDTHRESH_REG Register Field Descriptions

Bit	Field	Type	Reset	Description
31-8	RESERVED	R/W	X	
7-0	TH3_PENDTHRESH	R/W	0h	CPDMA THost Threshold Pending Register

Copyright © 2025 Texas Instruments Incorporated

11.2.1.6.174 CPDMA_TH4_PENDTHRESH_REG Register (Offset = 000340D0h) [Reset = X]

CPDMA_TH4_PENDTHRESH_REG is shown in Table 11-472.

Return to the Summary Table.

CPDMA THost Threshold Pending Register

Table 11-472. CPDMA_TH4_PENDTHRESH_REG Register Field Descriptions

Bit	Field	Type	Reset	Description
31-8	RESERVED	R/W	X	
7-0	TH4_PENDTHRESH	R/W	0h	CPDMA THost Threshold Pending Register

Copyright © 2025 Texas Instruments Incorporated

11.2.1.6.175 CPDMA_TH5_PENDTHRESH_REG Register (Offset = 000340D4h) [Reset = X]

CPDMA_TH5_PENDTHRESH_REG is shown in Table 11-473.

Return to the Summary Table.

CPDMA THost Threshold Pending Register

Table 11-473. CPDMA_TH5_PENDTHRESH_REG Register Field Descriptions

Bit	Field	Type	Reset	Description
31-8	RESERVED	R/W	X	
7-0	TH5_PENDTHRESH	R/W	0h	CPDMA THost Threshold Pending Register

Copyright © 2025 Texas Instruments Incorporated

11.2.1.6.176 CPDMA_TH6_PENDTHRESH_REG Register (Offset = 000340D8h) [Reset = X]

CPDMA_TH6_PENDTHRESH_REG is shown in Table 11-474.

Return to the Summary Table.

CPDMA THost Threshold Pending Register

Table 11-474. CPDMA_TH6_PENDTHRESH_REG Register Field Descriptions

Bit	Field	Type	Reset	Description
31-8	RESERVED	R/W	X	
7-0	TH6_PENDTHRESH	R/W	0h	CPDMA THost Threshold Pending Register

Copyright © 2025 Texas Instruments Incorporated

11.2.1.6.177 CPDMA_TH7_PENDTHRESH_REG Register (Offset = 000340DCh) [Reset = X]

CPDMA_TH7_PENDTHRESH_REG is shown in Table 11-475.

Return to the Summary Table.

CPDMA THost Threshold Pending Register

Table 11-475. CPDMA_TH7_PENDTHRESH_REG Register Field Descriptions

Bit	Field	Type	Reset	Description
31-8	RESERVED	R/W	X	
7-0	TH7_PENDTHRESH	R/W	0h	CPDMA THost Threshold Pending Register

Copyright © 2025 Texas Instruments Incorporated

11.2.1.6.178 CPDMA_TH0_FREEBUFFER_REG Register (Offset = 000340E0h) [Reset = X]

CPDMA_TH0_FREEBUFFER_REG is shown in Table 11-476.

Return to the Summary Table.

CPDMA THost Free Buffer Count Register

Table 11-476. CPDMA_TH0_FREEBUFFER_REG Register Field Descriptions

Bit	Field	Type	Reset	Description
31-15	RESERVED	R/W	X	
14-0	TH0_FREEBUFFER	R/W	0h	CPDMA THost Free Buffer Count Register

Copyright © 2025 Texas Instruments Incorporated

11.2.1.6.179 CPDMA_TH1_FREEBUFFER_REG Register (Offset = 000340E4h) [Reset = X]

CPDMA_TH1_FREEBUFFER_REG is shown in Table 11-477.

Return to the Summary Table.

CPDMA THost Free Buffer Count Register

Table 11-477. CPDMA_TH1_FREEBUFFER_REG Register Field Descriptions

Bit	Field	Type	Reset	Description
31-15	RESERVED	R/W	X	
14-0	TH1_FREEBUFFER	R/W	0h	CPDMA THost Free Buffer Count Register

Copyright © 2025 Texas Instruments Incorporated

11.2.1.6.180 CPDMA_TH2_FREEBUFFER_REG Register (Offset = 000340E8h) [Reset = X]

CPDMA_TH2_FREEBUFFER_REG is shown in Table 11-478.

Return to the Summary Table.

CPDMA THost Free Buffer Count Register

Table 11-478. CPDMA_TH2_FREEBUFFER_REG Register Field Descriptions

Bit	Field	Type	Reset	Description
31-15	RESERVED	R/W	X	
14-0	TH2_FREEBUFFER	R/W	0h	CPDMA THost Free Buffer Count Register

Copyright © 2025 Texas Instruments Incorporated

11.2.1.6.181 CPDMA_TH3_FREEBUFFER_REG Register (Offset = 000340ECh) [Reset = X]

CPDMA_TH3_FREEBUFFER_REG is shown in Table 11-479.

Return to the Summary Table.

CPDMA THost Free Buffer Count Register

Table 11-479. CPDMA_TH3_FREEBUFFER_REG Register Field Descriptions

Bit	Field	Type	Reset	Description
31-15	RESERVED	R/W	X	
14-0	TH3_FREEBUFFER	R/W	0h	CPDMA THost Free Buffer Count Register

Copyright © 2025 Texas Instruments Incorporated

11.2.1.6.182 CPDMA_TH4_FREEBUFFER_REG Register (Offset = 000340F0h) [Reset = X]

CPDMA_TH4_FREEBUFFER_REG is shown in Table 11-480.

Return to the Summary Table.

CPDMA THost Free Buffer Count Register

Table 11-480. CPDMA_TH4_FREEBUFFER_REG Register Field Descriptions

Bit	Field	Type	Reset	Description
31-15	RESERVED	R/W	X	
14-0	TH4_FREEBUFFER	R/W	0h	CPDMA THost Free Buffer Count Register

Copyright © 2025 Texas Instruments Incorporated

11.2.1.6.183 CPDMA_TH5_FREEBUFFER_REG Register (Offset = 000340F4h) [Reset = X]

CPDMA_TH5_FREEBUFFER_REG is shown in Table 11-481.

Return to the Summary Table.

CPDMA THost Free Buffer Count Register

Table 11-481. CPDMA_TH5_FREEBUFFER_REG Register Field Descriptions

Bit	Field	Type	Reset	Description
31-15	RESERVED	R/W	X	
14-0	TH5_FREEBUFFER	R/W	0h	CPDMA THost Free Buffer Count Register

Copyright © 2025 Texas Instruments Incorporated

11.2.1.6.184 CPDMA_TH6_FREEBUFFER_REG Register (Offset = 000340F8h) [Reset = X]

CPDMA_TH6_FREEBUFFER_REG is shown in Table 11-482.

Return to the Summary Table.

CPDMA THost Free Buffer Count Register

Table 11-482. CPDMA_TH6_FREEBUFFER_REG Register Field Descriptions

Bit	Field	Type	Reset	Description
31-15	RESERVED	R/W	X	
14-0	TH6_FREEBUFFER	R/W	0h	CPDMA THost Free Buffer Count Register

Copyright © 2025 Texas Instruments Incorporated

11.2.1.6.185 CPDMA_TH7_FREEBUFFER_REG Register (Offset = 000340FCh) [Reset = X]

CPDMA_TH7_FREEBUFFER_REG is shown in Table 11-483.

Return to the Summary Table.

CPDMA THost Free Buffer Count Register

Table 11-483. CPDMA_TH7_FREEBUFFER_REG Register Field Descriptions

Bit	Field	Type	Reset	Description
31-15	RESERVED	R/W	X	
14-0	TH7_FREEBUFFER	R/W	0h	CPDMA THost Free Buffer Count Register

Copyright © 2025 Texas Instruments Incorporated

11.2.1.6.186 CPDMA_FH0_HDP_REG Register (Offset = 00034200h) [Reset = 00000000h]

CPDMA_FH0_HDP_REG is shown in Table 11-484.

Return to the Summary Table.

CPDMA FHost Channel 0 Head Descriptor Pointer

Table 11-484. CPDMA_FH0_HDP_REG Register Field Descriptions

Bit	Field	Type	Reset	Description
31-0	FH0_HDP	R/W	0h	CPDMA FHost Channel 0 Head Descriptor Pointer

Copyright © 2025 Texas Instruments Incorporated

11.2.1.6.187 CPDMA_FH1_HDP_REG Register (Offset = 00034204h) [Reset = 00000000h]

CPDMA_FH1_HDP_REG is shown in Table 11-485.

Return to the Summary Table.

CPDMA FHost Channel 1 Head Descriptor Pointer

Table 11-485. CPDMA_FH1_HDP_REG Register Field Descriptions

Bit	Field	Type	Reset	Description
31-0	FH1_HDP	R/W	0h	CPDMA FHost Channel 1 Head Descriptor Pointer

Copyright © 2025 Texas Instruments Incorporated

11.2.1.6.188 CPDMA_FH2_HDP_REG Register (Offset = 00034208h) [Reset = 00000000h]

CPDMA_FH2_HDP_REG is shown in Table 11-486.

Return to the Summary Table.

CPDMA FHost Channel 2 Head Descriptor Pointer

Table 11-486. CPDMA_FH2_HDP_REG Register Field Descriptions

Bit	Field	Type	Reset	Description
31-0	FH2_HDP	R/W	0h	CPDMA FHost Channel 2 Head Descriptor Pointer

Copyright © 2025 Texas Instruments Incorporated

11.2.1.6.189 CPDMA_FH3_HDP_REG Register (Offset = 0003420Ch) [Reset = 00000000h]

CPDMA_FH3_HDP_REG is shown in Table 11-487.

Return to the Summary Table.

CPDMA FHost Channel 3 Head Descriptor Pointer

Table 11-487. CPDMA_FH3_HDP_REG Register Field Descriptions

Bit	Field	Type	Reset	Description
31-0	FH3_HDP	R/W	0h	CPDMA FHost Channel 3 Head Descriptor Pointer

Copyright © 2025 Texas Instruments Incorporated

11.2.1.6.190 CPDMA_FH4_HDP_REG Register (Offset = 00034210h) [Reset = 00000000h]

CPDMA_FH4_HDP_REG is shown in Table 11-488.

Return to the Summary Table.

CPDMA FHost Channel 4 Head Descriptor Pointer

Table 11-488. CPDMA_FH4_HDP_REG Register Field Descriptions

Bit	Field	Type	Reset	Description
31-0	FH4_HDP	R/W	0h	CPDMA FHost Channel 4 Head Descriptor Pointer

Copyright © 2025 Texas Instruments Incorporated

11.2.1.6.191 CPDMA_FH5_HDP_REG Register (Offset = 00034214h) [Reset = 00000000h]

CPDMA_FH5_HDP_REG is shown in Table 11-489.

Return to the Summary Table.

CPDMA FHost Channel 5 Head Descriptor Pointer

Table 11-489. CPDMA_FH5_HDP_REG Register Field Descriptions

Bit	Field	Type	Reset	Description
31-0	FH5_HDP	R/W	0h	CPDMA FHost Channel 5 Head Descriptor Pointer

Copyright © 2025 Texas Instruments Incorporated

11.2.1.6.192 CPDMA_FH6_HDP_REG Register (Offset = 00034218h) [Reset = 00000000h]

CPDMA_FH6_HDP_REG is shown in Table 11-490.

Return to the Summary Table.

CPDMA FHost Channel 6 Head Descriptor Pointer

Table 11-490. CPDMA_FH6_HDP_REG Register Field Descriptions

Bit	Field	Type	Reset	Description
31-0	FH6_HDP	R/W	0h	CPDMA FHost Channel 6 Head Descriptor Pointer

Copyright © 2025 Texas Instruments Incorporated

11.2.1.6.193 CPDMA_FH7_HDP_REG Register (Offset = 0003421Ch) [Reset = 00000000h]

CPDMA_FH7_HDP_REG is shown in Table 11-491.

Return to the Summary Table.

CPDMA FHost Channel 7 Head Descriptor Pointer

Table 11-491. CPDMA_FH7_HDP_REG Register Field Descriptions

Bit	Field	Type	Reset	Description
31-0	FH7_HDP	R/W	0h	CPDMA FHost Channel 7 Head Descriptor Pointer

Copyright © 2025 Texas Instruments Incorporated

11.2.1.6.194 CPDMA_TH0_HDP_REG Register (Offset = 00034220h) [Reset = 00000000h]

CPDMA_TH0_HDP_REG is shown in Table 11-492.

Return to the Summary Table.

CPDMA THost Channel 0 Head Descriptor Pointer

Table 11-492. CPDMA_TH0_HDP_REG Register Field Descriptions

Bit	Field	Type	Reset	Description
31-0	TH0_HDP	R/W	0h	CPDMA THost Channel 0 Head Descriptor Pointer

Copyright © 2025 Texas Instruments Incorporated

11.2.1.6.195 CPDMA_TH1_HDP_REG Register (Offset = 00034224h) [Reset = 00000000h]

CPDMA_TH1_HDP_REG is shown in Table 11-493.

Return to the Summary Table.

CPDMA THost Channel 1 Head Descriptor Pointer

Table 11-493. CPDMA_TH1_HDP_REG Register Field Descriptions

Bit	Field	Type	Reset	Description
31-0	TH1_HDP	R/W	0h	CPDMA THost Channel 1 Head Descriptor Pointer

Copyright © 2025 Texas Instruments Incorporated

11.2.1.6.196 CPDMA_TH2_HDP_REG Register (Offset = 00034228h) [Reset = 00000000h]

CPDMA_TH2_HDP_REG is shown in Table 11-494.

Return to the Summary Table.

CPDMA THost Channel 2 Head Descriptor Pointer

Table 11-494. CPDMA_TH2_HDP_REG Register Field Descriptions

Bit	Field	Type	Reset	Description
31-0	TH2_HDP	R/W	0h	CPDMA THost Channel 2 Head Descriptor Pointer

Copyright © 2025 Texas Instruments Incorporated

11.2.1.6.197 CPDMA_TH3_HDP_REG Register (Offset = 0003422Ch) [Reset = 00000000h]

CPDMA_TH3_HDP_REG is shown in Table 11-495.

Return to the Summary Table.

CPDMA THost Channel 3 Head Descriptor Pointer

Table 11-495. CPDMA_TH3_HDP_REG Register Field Descriptions

Bit	Field	Type	Reset	Description
31-0	TH3_HDP	R/W	0h	CPDMA THost Channel 3 Head Descriptor Pointer

Copyright © 2025 Texas Instruments Incorporated

11.2.1.6.198 CPDMA_TH4_HDP_REG Register (Offset = 00034230h) [Reset = 00000000h]

CPDMA_TH4_HDP_REG is shown in Table 11-496.

Return to the Summary Table.

CPDMA THost Channel 4 Head Descriptor Pointer

Table 11-496. CPDMA_TH4_HDP_REG Register Field Descriptions

Bit	Field	Type	Reset	Description
31-0	TH4_HDP	R/W	0h	CPDMA THost Channel 4 Head Descriptor Pointer

Copyright © 2025 Texas Instruments Incorporated

11.2.1.6.199 CPDMA_TH5_HDP_REG Register (Offset = 00034234h) [Reset = 00000000h]

CPDMA_TH5_HDP_REG is shown in Table 11-497.

Return to the Summary Table.

CPDMA THost Channel 5 Head Descriptor Pointer

Table 11-497. CPDMA_TH5_HDP_REG Register Field Descriptions

Bit	Field	Type	Reset	Description
31-0	TH5_HDP	R/W	0h	CPDMA THost Channel 5 Head Descriptor Pointer

Copyright © 2025 Texas Instruments Incorporated

11.2.1.6.200 CPDMA_TH6_HDP_REG Register (Offset = 00034238h) [Reset = 00000000h]

CPDMA_TH6_HDP_REG is shown in Table 11-498.

Return to the Summary Table.

CPDMA THost Channel 6 Head Descriptor Pointer

Table 11-498. CPDMA_TH6_HDP_REG Register Field Descriptions

Bit	Field	Type	Reset	Description
31-0	TH6_HDP	R/W	0h	CPDMA THost Channel 6 Head Descriptor Pointer

Copyright © 2025 Texas Instruments Incorporated

11.2.1.6.201 CPDMA_TH7_HDP_REG Register (Offset = 0003423Ch) [Reset = 00000000h]

CPDMA_TH7_HDP_REG is shown in Table 11-499.

Return to the Summary Table.

CPDMA THost Channel 7 Head Descriptor Pointer

Table 11-499. CPDMA_TH7_HDP_REG Register Field Descriptions

Bit	Field	Type	Reset	Description
31-0	TH7_HDP	R/W	0h	CPDMA THost Channel 7 Head Descriptor Pointer

Copyright © 2025 Texas Instruments Incorporated

11.2.1.6.202 CPDMA_FH0_CP_REG Register (Offset = 00034240h) [Reset = 00000000h]

CPDMA_FH0_CP_REG is shown in Table 11-500.

Return to the Summary Table.

CPDMA FHost Channel 0 Completion Pointer

Table 11-500. CPDMA_FH0_CP_REG Register Field Descriptions

Bit	Field	Type	Reset	Description
31-0	FH0_CP	R/W	0h	CPDMA FHost Channel 0 Completion Pointer

Copyright © 2025 Texas Instruments Incorporated

11.2.1.6.203 CPDMA_FH1_CP_REG Register (Offset = 00034244h) [Reset = 00000000h]

CPDMA_FH1_CP_REG is shown in Table 11-501.

Return to the Summary Table.

CPDMA FHost Channel 1 Completion Pointer

Table 11-501. CPDMA_FH1_CP_REG Register Field Descriptions

Bit	Field	Type	Reset	Description
31-0	FH1_CP	R/W	0h	CPDMA FHost Channel 1 Completion Pointer

Copyright © 2025 Texas Instruments Incorporated

11.2.1.6.204 CPDMA_FH2_CP_REG Register (Offset = 00034248h) [Reset = 00000000h]

CPDMA_FH2_CP_REG is shown in Table 11-502.

Return to the Summary Table.

CPDMA FHost Channel 2 Completion Pointer

Table 11-502. CPDMA_FH2_CP_REG Register Field Descriptions

Bit	Field	Type	Reset	Description
31-0	FH2_CP	R/W	0h	CPDMA FHost Channel 2 Completion Pointer

Copyright © 2025 Texas Instruments Incorporated

11.2.1.6.205 CPDMA_FH3_CP_REG Register (Offset = 0003424Ch) [Reset = 00000000h]

CPDMA_FH3_CP_REG is shown in Table 11-503.

Return to the Summary Table.

CPDMA FHost Channel 3 Completion Pointer

Table 11-503. CPDMA_FH3_CP_REG Register Field Descriptions

Bit	Field	Type	Reset	Description
31-0	FH3_CP	R/W	0h	CPDMA FHost Channel 3 Completion Pointer

Copyright © 2025 Texas Instruments Incorporated

11.2.1.6.206 CPDMA_FH4_CP_REG Register (Offset = 00034250h) [Reset = 00000000h]

CPDMA_FH4_CP_REG is shown in Table 11-504.

Return to the Summary Table.

CPDMA FHost Channel 4 Completion Pointer

Table 11-504. CPDMA_FH4_CP_REG Register Field Descriptions

Bit	Field	Type	Reset	Description
31-0	FH4_CP	R/W	0h	CPDMA FHost Channel 4 Completion Pointer

Copyright © 2025 Texas Instruments Incorporated

11.2.1.6.207 CPDMA_FH5_CP_REG Register (Offset = 00034254h) [Reset = 00000000h]

CPDMA_FH5_CP_REG is shown in Table 11-505.

Return to the Summary Table.

CPDMA FHost Channel 5 Completion Pointer

Table 11-505. CPDMA_FH5_CP_REG Register Field Descriptions

Bit	Field	Type	Reset	Description
31-0	FH5_CP	R/W	0h	CPDMA FHost Channel 5 Completion Pointer

Copyright © 2025 Texas Instruments Incorporated

11.2.1.6.208 CPDMA_FH6_CP_REG Register (Offset = 00034258h) [Reset = 00000000h]

CPDMA_FH6_CP_REG is shown in Table 11-506.

Return to the Summary Table.

CPDMA FHost Channel 6 Completion Pointer

Table 11-506. CPDMA_FH6_CP_REG Register Field Descriptions

Bit	Field	Type	Reset	Description
31-0	FH6_CP	R/W	0h	CPDMA FHost Channel 6 Completion Pointer

Copyright © 2025 Texas Instruments Incorporated

11.2.1.6.209 CPDMA_FH7_CP_REG Register (Offset = 0003425Ch) [Reset = 00000000h]

CPDMA_FH7_CP_REG is shown in Table 11-507.

Return to the Summary Table.

CPDMA FHost Channel 7 Completion Pointer

Table 11-507. CPDMA_FH7_CP_REG Register Field Descriptions

Bit	Field	Type	Reset	Description
31-0	FH7_CP	R/W	0h	CPDMA FHost Channel 7 Completion Pointer

Copyright © 2025 Texas Instruments Incorporated

11.2.1.6.210 CPDMA_TH0_CP_REG Register (Offset = 00034260h) [Reset = 00000000h]

CPDMA_TH0_CP_REG is shown in Table 11-508.

Return to the Summary Table.

CPDMA THost Channel 0 Completion Pointer

Table 11-508. CPDMA_TH0_CP_REG Register Field Descriptions

Bit	Field	Type	Reset	Description
31-0	TH0_CP	R/W	0h	CPDMA THost Channel 0 Completion Pointer

Copyright © 2025 Texas Instruments Incorporated

11.2.1.6.211 CPDMA_TH1_CP_REG Register (Offset = 00034264h) [Reset = 00000000h]

CPDMA_TH1_CP_REG is shown in Table 11-509.

Return to the Summary Table.

CPDMA THost Channel 1 Completion Pointer

Table 11-509. CPDMA_TH1_CP_REG Register Field Descriptions

Bit	Field	Type	Reset	Description
31-0	TH1_CP	R/W	0h	CPDMA THost Channel 1 Completion Pointer

Copyright © 2025 Texas Instruments Incorporated

11.2.1.6.212 CPDMA_TH2_CP_REG Register (Offset = 00034268h) [Reset = 00000000h]

CPDMA_TH2_CP_REG is shown in Table 11-510.

Return to the Summary Table.

CPDMA THost Channel 2 Completion Pointer

Table 11-510. CPDMA_TH2_CP_REG Register Field Descriptions

Bit	Field	Type	Reset	Description
31-0	TH2_CP	R/W	0h	CPDMA THost Channel 2 Completion Pointer

Copyright © 2025 Texas Instruments Incorporated

11.2.1.6.213 CPDMA_TH3_CP_REG Register (Offset = 0003426Ch) [Reset = 00000000h]

CPDMA_TH3_CP_REG is shown in Table 11-511.

Return to the Summary Table.

CPDMA THost Channel 3 Completion Pointer

Table 11-511. CPDMA_TH3_CP_REG Register Field Descriptions

Bit	Field	Type	Reset	Description
31-0	TH3_CP	R/W	0h	CPDMA THost Channel 3 Completion Pointer

Copyright © 2025 Texas Instruments Incorporated

11.2.1.6.214 CPDMA_TH4_CP_REG Register (Offset = 00034270h) [Reset = 00000000h]

CPDMA_TH4_CP_REG is shown in Table 11-512.

Return to the Summary Table.

CPDMA THost Channel 4 Completion Pointer

Table 11-512. CPDMA_TH4_CP_REG Register Field Descriptions

Bit	Field	Type	Reset	Description
31-0	TH4_CP	R/W	0h	CPDMA THost Channel 4 Completion Pointer

Copyright © 2025 Texas Instruments Incorporated

11.2.1.6.215 CPDMA_TH5_CP_REG Register (Offset = 00034274h) [Reset = 00000000h]

CPDMA_TH5_CP_REG is shown in Table 11-513.

Return to the Summary Table.

CPDMA THost Channel 5 Completion Pointer

Table 11-513. CPDMA_TH5_CP_REG Register Field Descriptions

Bit	Field	Type	Reset	Description
31-0	TH5_CP	R/W	0h	CPDMA THost Channel 5 Completion Pointer

Copyright © 2025 Texas Instruments Incorporated

11.2.1.6.216 CPDMA_TH6_CP_REG Register (Offset = 00034278h) [Reset = 00000000h]

CPDMA_TH6_CP_REG is shown in Table 11-514.

Return to the Summary Table.

CPDMA THost Channel 6 Completion Pointer

Table 11-514. CPDMA_TH6_CP_REG Register Field Descriptions

Bit	Field	Type	Reset	Description
31-0	TH6_CP	R/W	0h	CPDMA THost Channel 6 Completion Pointer

Copyright © 2025 Texas Instruments Incorporated

11.2.1.6.217 CPDMA_TH7_CP_REG Register (Offset = 0003427Ch) [Reset = 00000000h]

CPDMA_TH7_CP_REG is shown in Table 11-515.

Return to the Summary Table.

CPDMA THost Channel 7 Completion Pointer

Table 11-515. CPDMA_TH7_CP_REG Register Field Descriptions

Bit	Field	Type	Reset	Description
31-0	TH7_CP	R/W	0h	CPDMA THost Channel 7 Completion Pointer

Copyright © 2025 Texas Instruments Incorporated

11.2.1.6.218 TEST_CPDMA_FH0_HDP_REG Register (Offset = 00034300h) [Reset = 00000000h]

TEST_CPDMA_FH0_HDP_REG is shown in Table 11-516.

Return to the Summary Table.

Test CPDMA FHost Channel 0 Head Descriptor Pointer

Table 11-516. TEST_CPDMA_FH0_HDP_REG Register Field Descriptions

Bit	Field	Type	Reset	Description
31-0	TEST_FH0_HDP	R/W	0h	Test CPDMA FHost Channel 0 Head Descriptor Pointer

Copyright © 2025 Texas Instruments Incorporated

11.2.1.6.219 TEST_CPDMA_FH1_HDP_REG Register (Offset = 00034304h) [Reset = 00000000h]

TEST_CPDMA_FH1_HDP_REG is shown in Table 11-517.

Return to the Summary Table.

Test CPDMA FHost Channel 1 Head Descriptor Pointer

Table 11-517. TEST_CPDMA_FH1_HDP_REG Register Field Descriptions

Bit	Field	Type	Reset	Description
31-0	TEST_FH1_HDP	R/W	0h	Test CPDMA FHost Channel 1 Head Descriptor Pointer

Copyright © 2025 Texas Instruments Incorporated

11.2.1.6.220 TEST_CPDMA_FH2_HDP_REG Register (Offset = 00034308h) [Reset = 00000000h]

TEST_CPDMA_FH2_HDP_REG is shown in Table 11-518.

Return to the Summary Table.

Test CPDMA FHost Channel 2 Head Descriptor Pointer

Table 11-518. TEST_CPDMA_FH2_HDP_REG Register Field Descriptions

Bit	Field	Type	Reset	Description
31-0	TEST_FH2_HDP	R/W	0h	Test CPDMA FHost Channel 2 Head Descriptor Pointer

Copyright © 2025 Texas Instruments Incorporated

11.2.1.6.221 TEST_CPDMA_FH3_HDP_REG Register (Offset = 0003430Ch) [Reset = 00000000h]

TEST_CPDMA_FH3_HDP_REG is shown in Table 11-519.

Return to the Summary Table.

Test CPDMA FHost Channel 3 Head Descriptor Pointer

Table 11-519. TEST_CPDMA_FH3_HDP_REG Register Field Descriptions

Bit	Field	Type	Reset	Description
31-0	TEST_FH3_HDP	R/W	0h	Test CPDMA FHost Channel 3 Head Descriptor Pointer

Copyright © 2025 Texas Instruments Incorporated

11.2.1.6.222 TEST_CPDMA_FH4_HDP_REG Register (Offset = 00034310h) [Reset = 00000000h]

TEST_CPDMA_FH4_HDP_REG is shown in Table 11-520.

Return to the Summary Table.

Test CPDMA FHost Channel 4 Head Descriptor Pointer

Table 11-520. TEST_CPDMA_FH4_HDP_REG Register Field Descriptions

Bit	Field	Type	Reset	Description
31-0	TEST_FH4_HDP	R/W	0h	Test CPDMA FHost Channel 4 Head Descriptor Pointer

Copyright © 2025 Texas Instruments Incorporated

11.2.1.6.223 TEST_CPDMA_FH5_HDP_REG Register (Offset = 00034314h) [Reset = 00000000h]

TEST_CPDMA_FH5_HDP_REG is shown in Table 11-521.

Return to the Summary Table.

Test CPDMA FHost Channel 5 Head Descriptor Pointer

Table 11-521. TEST_CPDMA_FH5_HDP_REG Register Field Descriptions

Bit	Field	Type	Reset	Description
31-0	TEST_FH5_HDP	R/W	0h	Test CPDMA FHost Channel 5 Head Descriptor Pointer

Copyright © 2025 Texas Instruments Incorporated

11.2.1.6.224 TEST_CPDMA_FH6_HDP_REG Register (Offset = 00034318h) [Reset = 00000000h]

TEST_CPDMA_FH6_HDP_REG is shown in Table 11-522.

Return to the Summary Table.

Test CPDMA FHost Channel 6 Head Descriptor Pointer

Table 11-522. TEST_CPDMA_FH6_HDP_REG Register Field Descriptions

Bit	Field	Type	Reset	Description
31-0	TEST_FH6_HDP	R/W	0h	Test CPDMA FHost Channel 6 Head Descriptor Pointer

Copyright © 2025 Texas Instruments Incorporated

11.2.1.6.225 TEST_CPDMA_FH7_HDP_REG Register (Offset = 0003431Ch) [Reset = 00000000h]

TEST_CPDMA_FH7_HDP_REG is shown in Table 11-523.

Return to the Summary Table.

Test CPDMA FHost Channel 7 Head Descriptor Pointer

Table 11-523. TEST_CPDMA_FH7_HDP_REG Register Field Descriptions

Bit	Field	Type	Reset	Description
31-0	TEST_FH7_HDP	R/W	0h	Test CPDMA FHost Channel 7 Head Descriptor Pointer

Copyright © 2025 Texas Instruments Incorporated

11.2.1.6.226 TEST_CPDMA_TH0_HDP_REG Register (Offset = 00034320h) [Reset = 00000000h]

TEST_CPDMA_TH0_HDP_REG is shown in Table 11-524.

Return to the Summary Table.

Test CPDMA THost Channel 0 Head Descriptor Pointer

Table 11-524. TEST_CPDMA_TH0_HDP_REG Register Field Descriptions

Bit	Field	Type	Reset	Description
31-0	TEST_TH0_HDP	R/W	0h	Test CPDMA THost Channel 0 Head Descriptor Pointer

Copyright © 2025 Texas Instruments Incorporated

11.2.1.6.227 TEST_CPDMA_TH1_HDP_REG Register (Offset = 00034324h) [Reset = 00000000h]

TEST_CPDMA_TH1_HDP_REG is shown in Table 11-525.

Return to the Summary Table.

Test CPDMA THost Channel 1 Head Descriptor Pointer

Table 11-525. TEST_CPDMA_TH1_HDP_REG Register Field Descriptions

Bit	Field	Type	Reset	Description
31-0	TEST_TH1_HDP	R/W	0h	Test CPDMA THost Channel 1 Head Descriptor Pointer

Copyright © 2025 Texas Instruments Incorporated

11.2.1.6.228 TEST_CPDMA_TH2_HDP_REG Register (Offset = 00034328h) [Reset = 00000000h]

TEST_CPDMA_TH2_HDP_REG is shown in Table 11-526.

Return to the Summary Table.

Test CPDMA THost Channel 2 Head Descriptor Pointer

Table 11-526. TEST_CPDMA_TH2_HDP_REG Register Field Descriptions

Bit	Field	Type	Reset	Description
31-0	TEST_TH2_HDP	R/W	0h	Test CPDMA THost Channel 2 Head Descriptor Pointer

Copyright © 2025 Texas Instruments Incorporated

11.2.1.6.229 TEST_CPDMA_TH3_HDP_REG Register (Offset = 0003432Ch) [Reset = 00000000h]

TEST_CPDMA_TH3_HDP_REG is shown in Table 11-527.

Return to the Summary Table.

Test CPDMA THost Channel 3 Head Descriptor Pointer

Table 11-527. TEST_CPDMA_TH3_HDP_REG Register Field Descriptions

Bit	Field	Type	Reset	Description
31-0	TEST_TH3_HDP	R/W	0h	Test CPDMA THost Channel 3 Head Descriptor Pointer

Copyright © 2025 Texas Instruments Incorporated

11.2.1.6.230 TEST_CPDMA_TH4_HDP_REG Register (Offset = 00034330h) [Reset = 00000000h]

TEST_CPDMA_TH4_HDP_REG is shown in Table 11-528.

Return to the Summary Table.

Test CPDMA THost Channel 4 Head Descriptor Pointer

Table 11-528. TEST_CPDMA_TH4_HDP_REG Register Field Descriptions

Bit	Field	Type	Reset	Description
31-0	TEST_TH4_HDP	R/W	0h	Test CPDMA THost Channel 4 Head Descriptor Pointer

Copyright © 2025 Texas Instruments Incorporated

11.2.1.6.231 TEST_CPDMA_TH5_HDP_REG Register (Offset = 00034334h) [Reset = 00000000h]

TEST_CPDMA_TH5_HDP_REG is shown in Table 11-529.

Return to the Summary Table.

Test CPDMA THost Channel 5 Head Descriptor Pointer

Table 11-529. TEST_CPDMA_TH5_HDP_REG Register Field Descriptions

Bit	Field	Type	Reset	Description
31-0	TEST_TH5_HDP	R/W	0h	Test CPDMA THost Channel 5 Head Descriptor Pointer

Copyright © 2025 Texas Instruments Incorporated

11.2.1.6.232 TEST_CPDMA_TH6_HDP_REG Register (Offset = 00034338h) [Reset = 00000000h]

TEST_CPDMA_TH6_HDP_REG is shown in Table 11-530.

Return to the Summary Table.

Test CPDMA THost Channel 6 Head Descriptor Pointer

Table 11-530. TEST_CPDMA_TH6_HDP_REG Register Field Descriptions

Bit	Field	Type	Reset	Description
31-0	TEST_TH6_HDP	R/W	0h	Test CPDMA THost Channel 6 Head Descriptor Pointer

Copyright © 2025 Texas Instruments Incorporated

11.2.1.6.233 TEST_CPDMA_TH7_HDP_REG Register (Offset = 0003433Ch) [Reset = 00000000h]

TEST_CPDMA_TH7_HDP_REG is shown in Table 11-531.

Return to the Summary Table.

Test CPDMA THost Channel 7 Head Descriptor Pointer

Table 11-531. TEST_CPDMA_TH7_HDP_REG Register Field Descriptions

Bit	Field	Type	Reset	Description
31-0	TEST_TH7_HDP	R/W	0h	Test CPDMA THost Channel 7 Head Descriptor Pointer

Copyright © 2025 Texas Instruments Incorporated

11.2.1.6.234 TEST_CPDMA_FH0_CP_REG Register (Offset = 00034340h) [Reset = 00000000h]

TEST_CPDMA_FH0_CP_REG is shown in Table 11-532.

Return to the Summary Table.

Test CPDMA FHost Channel 0 Completion Pointer

Table 11-532. TEST_CPDMA_FH0_CP_REG Register Field Descriptions

Bit	Field	Type	Reset	Description
31-0	TEST_FH0_CP	R/W	0h	Test CPDMA FHost Channel 0 Completion Pointer

Copyright © 2025 Texas Instruments Incorporated

11.2.1.6.235 TEST_CPDMA_FH1_CP_REG Register (Offset = 00034344h) [Reset = 00000000h]

TEST_CPDMA_FH1_CP_REG is shown in Table 11-533.

Return to the Summary Table.

Test CPDMA FHost Channel 1 Completion Pointer

Table 11-533. TEST_CPDMA_FH1_CP_REG Register Field Descriptions

Bit	Field	Type	Reset	Description
31-0	TEST_FH1_CP	R/W	0h	Test CPDMA FHost Channel 1 Completion Pointer

Copyright © 2025 Texas Instruments Incorporated

11.2.1.6.236 TEST_CPDMA_FH2_CP_REG Register (Offset = 00034348h) [Reset = 00000000h]

TEST_CPDMA_FH2_CP_REG is shown in Table 11-534.

Return to the Summary Table.

Test CPDMA FHost Channel 2 Completion Pointer

Table 11-534. TEST_CPDMA_FH2_CP_REG Register Field Descriptions

Bit	Field	Type	Reset	Description
31-0	TEST_FH2_CP	R/W	0h	Test CPDMA FHost Channel 2 Completion Pointer

Copyright © 2025 Texas Instruments Incorporated

11.2.1.6.237 TEST_CPDMA_FH3_CP_REG Register (Offset = 0003434Ch) [Reset = 00000000h]

TEST_CPDMA_FH3_CP_REG is shown in Table 11-535.

Return to the Summary Table.

Test CPDMA FHost Channel 3 Completion Pointer

Table 11-535. TEST_CPDMA_FH3_CP_REG Register Field Descriptions

Bit	Field	Type	Reset	Description
31-0	TEST_FH3_CP	R/W	0h	Test CPDMA FHost Channel 3 Completion Pointer

Copyright © 2025 Texas Instruments Incorporated

11.2.1.6.238 TEST_CPDMA_FH4_CP_REG Register (Offset = 00034350h) [Reset = 00000000h]

TEST_CPDMA_FH4_CP_REG is shown in Table 11-536.

Return to the Summary Table.

Test CPDMA FHost Channel 4 Completion Pointer

Table 11-536. TEST_CPDMA_FH4_CP_REG Register Field Descriptions

Bit	Field	Type	Reset	Description
31-0	TEST_FH4_CP	R/W	0h	Test CPDMA FHost Channel 4 Completion Pointer

Copyright © 2025 Texas Instruments Incorporated

11.2.1.6.239 TEST_CPDMA_FH5_CP_REG Register (Offset = 00034354h) [Reset = 00000000h]

TEST_CPDMA_FH5_CP_REG is shown in Table 11-537.

Return to the Summary Table.

Test CPDMA FHost Channel 5 Completion Pointer

Table 11-537. TEST_CPDMA_FH5_CP_REG Register Field Descriptions

Bit	Field	Type	Reset	Description
31-0	TEST_FH5_CP	R/W	0h	Test CPDMA FHost Channel 5 Completion Pointer

Copyright © 2025 Texas Instruments Incorporated

11.2.1.6.240 TEST_CPDMA_FH6_CP_REG Register (Offset = 00034358h) [Reset = 00000000h]

TEST_CPDMA_FH6_CP_REG is shown in Table 11-538.

Return to the Summary Table.

Test CPDMA FHost Channel 6 Completion Pointer

Table 11-538. TEST_CPDMA_FH6_CP_REG Register Field Descriptions

Bit	Field	Type	Reset	Description
31-0	TEST_FH6_CP	R/W	0h	Test CPDMA FHost Channel 6 Completion Pointer

Copyright © 2025 Texas Instruments Incorporated

11.2.1.6.241 TEST_CPDMA_FH7_CP_REG Register (Offset = 0003435Ch) [Reset = 00000000h]

TEST_CPDMA_FH7_CP_REG is shown in Table 11-539.

Return to the Summary Table.

Test CPDMA FHost Channel 7 Completion Pointer

Table 11-539. TEST_CPDMA_FH7_CP_REG Register Field Descriptions

Bit	Field	Type	Reset	Description
31-0	TEST_FH7_CP	R/W	0h	Test CPDMA FHost Channel 7 Completion Pointer

Copyright © 2025 Texas Instruments Incorporated

11.2.1.6.242 TEST_CPDMA_TH0_CP_REG Register (Offset = 00034360h) [Reset = 00000000h]

TEST_CPDMA_TH0_CP_REG is shown in Table 11-540.

Return to the Summary Table.

Test CPDMA THost Channel 0 Completion Pointer

Table 11-540. TEST_CPDMA_TH0_CP_REG Register Field Descriptions

Bit	Field	Type	Reset	Description
31-0	TEST_TH0_CP	R/W	0h	Test CPDMA THost Channel 0 Completion Pointer

Copyright © 2025 Texas Instruments Incorporated

11.2.1.6.243 TEST_CPDMA_TH1_CP_REG Register (Offset = 00034364h) [Reset = 00000000h]

TEST_CPDMA_TH1_CP_REG is shown in Table 11-541.

Return to the Summary Table.

Test CPDMA THost Channel 1 Completion Pointer

Table 11-541. TEST_CPDMA_TH1_CP_REG Register Field Descriptions

Bit	Field	Type	Reset	Description
31-0	TEST_TH1_CP	R/W	0h	Test CPDMA THost Channel 1 Completion Pointer

Copyright © 2025 Texas Instruments Incorporated

11.2.1.6.244 TEST_CPDMA_TH2_CP_REG Register (Offset = 00034368h) [Reset = 00000000h]

TEST_CPDMA_TH2_CP_REG is shown in Table 11-542.

Return to the Summary Table.

Test CPDMA THost Channel 2 Completion Pointer

Table 11-542. TEST_CPDMA_TH2_CP_REG Register Field Descriptions

Bit	Field	Type	Reset	Description
31-0	TEST_TH2_CP	R/W	0h	Test CPDMA THost Channel 2 Completion Pointer

Copyright © 2025 Texas Instruments Incorporated

11.2.1.6.245 TEST_CPDMA_TH3_CP_REG Register (Offset = 0003436Ch) [Reset = 00000000h]

TEST_CPDMA_TH3_CP_REG is shown in Table 11-543.

Return to the Summary Table.

Test CPDMA THost Channel 3 Completion Pointer

Table 11-543. TEST_CPDMA_TH3_CP_REG Register Field Descriptions

Bit	Field	Type	Reset	Description
31-0	TEST_TH3_CP	R/W	0h	Test CPDMA THost Channel 3 Completion Pointer

Copyright © 2025 Texas Instruments Incorporated

11.2.1.6.246 TEST_CPDMA_TH4_CP_REG Register (Offset = 00034370h) [Reset = 00000000h]

TEST_CPDMA_TH4_CP_REG is shown in Table 11-544.

Return to the Summary Table.

Test CPDMA THost Channel 4 Completion Pointer

Table 11-544. TEST_CPDMA_TH4_CP_REG Register Field Descriptions

Bit	Field	Type	Reset	Description
31-0	TEST_TH4_CP	R/W	0h	Test CPDMA THost Channel 4 Completion Pointer

Copyright © 2025 Texas Instruments Incorporated

11.2.1.6.247 TEST_CPDMA_TH5_CP_REG Register (Offset = 00034374h) [Reset = 00000000h]

TEST_CPDMA_TH5_CP_REG is shown in Table 11-545.

Return to the Summary Table.

Test CPDMA THost Channel 5 Completion Pointer

Table 11-545. TEST_CPDMA_TH5_CP_REG Register Field Descriptions

Bit	Field	Type	Reset	Description
31-0	TEST_TH5_CP	R/W	0h	Test CPDMA THost Channel 5 Completion Pointer

Copyright © 2025 Texas Instruments Incorporated

11.2.1.6.248 TEST_CPDMA_TH6_CP_REG Register (Offset = 00034378h) [Reset = 00000000h]

TEST_CPDMA_TH6_CP_REG is shown in Table 11-546.

Return to the Summary Table.

Test CPDMA THost Channel 6 Completion Pointer

Table 11-546. TEST_CPDMA_TH6_CP_REG Register Field Descriptions

Bit	Field	Type	Reset	Description
31-0	TEST_TH6_CP	R/W	0h	Test CPDMA THost Channel 6 Completion Pointer

Copyright © 2025 Texas Instruments Incorporated

11.2.1.6.249 TEST_CPDMA_TH7_CP_REG Register (Offset = 0003437Ch) [Reset = 00000000h]

TEST_CPDMA_TH7_CP_REG is shown in Table 11-547.

Return to the Summary Table.

Test CPDMA THost Channel 7 Completion Pointer

Table 11-547. TEST_CPDMA_TH7_CP_REG Register Field Descriptions

Bit	Field	Type	Reset	Description
31-0	TEST_TH7_CP	R/W	0h	Test CPDMA THost Channel 7 Completion Pointer

Copyright © 2025 Texas Instruments Incorporated

11.2.1.6.250 RXGOODFRAMES Register (Offset = 0003A000h) [Reset = 00000000h]

RXGOODFRAMES is shown in Table 11-548.

Return to the Summary Table.

Total number of good frames received

Table 11-548. RXGOODFRAMES Register Field Descriptions

Bit	Field	Type	Reset	Description
31-0	COUNT	R/W	0h	Total number of good frames received

Copyright © 2025 Texas Instruments Incorporated

11.2.1.6.251 RXBROADCASTFRAMES Register (Offset = 0003A004h) [Reset = 00000000h]

RXBROADCASTFRAMES is shown in Table 11-549.

Return to the Summary Table.

Total number of good broadcast frames received

Table 11-549. RXBROADCASTFRAMES Register Field Descriptions

Bit	Field	Type	Reset	Description
31-0	COUNT	R/W	0h	Total number of good broadcast frames received

Copyright © 2025 Texas Instruments Incorporated

11.2.1.6.252 RXMULTICASTFRAMES Register (Offset = 0003A008h) [Reset = 00000000h]

RXMULTICASTFRAMES is shown in Table 11-550.

Return to the Summary Table.

Total number of good multicast frames received

Table 11-550. RXMULTICASTFRAMES Register Field Descriptions

Bit	Field	Type	Reset	Description
31-0	COUNT	R/W	0h	Total number of good multicast frames received

Copyright © 2025 Texas Instruments Incorporated

11.2.1.6.253 RXCRCERRORS Register (Offset = 0003A010h) [Reset = 00000000h]

RXCRCERRORS is shown in Table 11-551.

Return to the Summary Table.

Total number of CRC errors frames received

Table 11-551. RXCRCERRORS Register Field Descriptions

Bit	Field	Type	Reset	Description
31-0	COUNT	R/W	0h	Total number of CRC errors frames received

Copyright © 2025 Texas Instruments Incorporated

11.2.1.6.254 RXOVERSIZEDFRAMES Register (Offset = 0003A018h) [Reset = 00000000h]

RXOVERSIZEDFRAMES is shown in Table 11-552.

Return to the Summary Table.

Total number of oversized frames received

Table 11-552. RXOVERSIZEDFRAMES Register Field Descriptions

Bit	Field	Type	Reset	Description
31-0	COUNT	R/W	0h	Total number of oversized frames received

Copyright © 2025 Texas Instruments Incorporated

11.2.1.6.255 RXUNDERSIZEDFRAMES Register (Offset = 0003A020h) [Reset = 00000000h]

RXUNDERSIZEDFRAMES is shown in Table 11-553.

Return to the Summary Table.

Total number of undersized frames received

Table 11-553. RXUNDERSIZEDFRAMES Register Field Descriptions

Bit	Field	Type	Reset	Description
31-0	COUNT	R/W	0h	Total number of undersized frames received

Copyright © 2025 Texas Instruments Incorporated

11.2.1.6.256 RXFRAGMENTS Register (Offset = 0003A024h) [Reset = 00000000h]

RXFRAGMENTS is shown in Table 11-554.

Return to the Summary Table.

Total number of fragmented frames received

Table 11-554. RXFRAGMENTS Register Field Descriptions

Bit	Field	Type	Reset	Description
31-0	COUNT	R/W	0h	Total number of fragmented frames received

Copyright © 2025 Texas Instruments Incorporated

11.2.1.6.257 ALE_DROP Register (Offset = 0003A028h) [Reset = 00000000h]

ALE_DROP is shown in Table 11-555.

Return to the Summary Table.

Total number of frames dropped by the ALE

Table 11-555. ALE_DROP Register Field Descriptions

Bit	Field	Type	Reset	Description
31-0	COUNT	R/W	0h	Total number of frames dropped by the ALE

Copyright © 2025 Texas Instruments Incorporated

11.2.1.6.258 ALE_OVERRUN_DROP Register (Offset = 0003A02Ch) [Reset = 00000000h]

ALE_OVERRUN_DROP is shown in Table 11-556.

Return to the Summary Table.

Total number of overrun frames dropped by the ALE

Table 11-556. ALE_OVERRUN_DROP Register Field Descriptions

Bit	Field	Type	Reset	Description
31-0	COUNT	R/W	0h	Total number of overrun frames dropped by the ALE

Copyright © 2025 Texas Instruments Incorporated

11.2.1.6.259 RXOCTETS Register (Offset = 0003A030h) [Reset = 00000000h]

RXOCTETS is shown in Table 11-557.

Return to the Summary Table.

Total number of received bytes in good frames

Table 11-557. RXOCTETS Register Field Descriptions

Bit	Field	Type	Reset	Description
31-0	COUNT	R/W	0h	Total number of received bytes in good frames

Copyright © 2025 Texas Instruments Incorporated

11.2.1.6.260 TXGOODFRAMES Register (Offset = 0003A034h) [Reset = 00000000h]

TXGOODFRAMES is shown in Table 11-558.

Return to the Summary Table.

Total number of good frames transmitted

Table 11-558. TXGOODFRAMES Register Field Descriptions

Bit	Field	Type	Reset	Description
31-0	COUNT	R/W	0h	Total number of good frames transmitted

Copyright © 2025 Texas Instruments Incorporated

11.2.1.6.261 TXBROADCASTFRAMES Register (Offset = 0003A038h) [Reset = 00000000h]

TXBROADCASTFRAMES is shown in Table 11-559.

Return to the Summary Table.

Total number of good broadcast frames transmitted

Table 11-559. TXBROADCASTFRAMES Register Field Descriptions

Bit	Field	Type	Reset	Description
31-0	COUNT	R/W	0h	Total number of good broadcast frames transmitted

Copyright © 2025 Texas Instruments Incorporated

11.2.1.6.262 TXMULTICASTFRAMES Register (Offset = 0003A03Ch) [Reset = 00000000h]

TXMULTICASTFRAMES is shown in Table 11-560.

Return to the Summary Table.

Total number of good multicast frames transmitted

Table 11-560. TXMULTICASTFRAMES Register Field Descriptions

Bit	Field	Type	Reset	Description
31-0	COUNT	R/W	0h	Total number of good multicast frames transmitted

Copyright © 2025 Texas Instruments Incorporated

11.2.1.6.263 TXSINGLECOLLFRAMES Register (Offset = 0003A04Ch) [Reset = 00000000h]

TXSINGLECOLLFRAMES is shown in Table 11-561.

Return to the Summary Table.

Total number of transmitted frames experiencing a single collision

Table 11-561. TXSINGLECOLLFRAMES Register Field Descriptions

Bit	Field	Type	Reset	Description
31-0	COUNT	R/W	0h	Total number of transmitted frames experiencing a single collision

Copyright © 2025 Texas Instruments Incorporated

11.2.1.6.264 TXMULTCOLLFRAMES Register (Offset = 0003A050h) [Reset = 00000000h]

TXMULTCOLLFRAMES is shown in Table 11-562.

Return to the Summary Table.

Total number of transmitted frames experiencing multiple collisions

Table 11-562. TXMULTCOLLFRAMES Register Field Descriptions

Bit	Field	Type	Reset	Description
31-0	COUNT	R/W	0h	Total number of transmitted frames experiencing multiple collisions

Copyright © 2025 Texas Instruments Incorporated

11.2.1.6.265 TXOCTETS Register (Offset = 0003A064h) [Reset = 00000000h]

TXOCTETS is shown in Table 11-563.

Return to the Summary Table.

Total number of bytes in all good frames transmitted

Table 11-563. TXOCTETS Register Field Descriptions

Bit	Field	Type	Reset	Description
31-0	COUNT	R/W	0h	Total number of bytes in all good frames transmitted

Copyright © 2025 Texas Instruments Incorporated

11.2.1.6.266 OCTETFRAMES64 Register (Offset = 0003A068h) [Reset = 00000000h]

OCTETFRAMES64 is shown in Table 11-564.

Return to the Summary Table.

Total number of 64-byte frames received and transmitted

Table 11-564. OCTETFRAMES64 Register Field Descriptions

Bit	Field	Type	Reset	Description
31-0	COUNT	R/W	0h	Total number of 64-byte frames received and transmitted

Copyright © 2025 Texas Instruments Incorporated

11.2.1.6.267 OCTETFRAMES65T127 Register (Offset = 0003A06Ch) [Reset = 00000000h]

OCTETFRAMES65T127 is shown in Table 11-565.

Return to the Summary Table.

Total number of frames of size 65 to 127 bytes received and transmitted

Table 11-565. OCTETFRAMES65T127 Register Field Descriptions

Bit	Field	Type	Reset	Description
31-0	COUNT	R/W	0h	Total number of frames of size 65 to 127 bytes received and transmitted

Copyright © 2025 Texas Instruments Incorporated

11.2.1.6.268 OCTETFRAMES128T255 Register (Offset = 0003A070h) [Reset = 00000000h]

OCTETFRAMES128T255 is shown in Table 11-566.

Return to the Summary Table.

Total number of frames of size 128 to 255 bytes received and transmitted

Table 11-566. OCTETFRAMES128T255 Register Field Descriptions

Bit	Field	Type	Reset	Description
31-0	COUNT	R/W	0h	Total number of frames of size 128 to 255 bytes received and transmitted

Copyright © 2025 Texas Instruments Incorporated

11.2.1.6.269 OCTETFRAMES256T511 Register (Offset = 0003A074h) [Reset = 00000000h]

OCTETFRAMES256T511 is shown in Table 11-567.

Return to the Summary Table.

Total number of frames of size 256 to 511 bytes received and transmitted

Table 11-567. OCTETFRAMES256T511 Register Field Descriptions

Bit	Field	Type	Reset	Description
31-0	COUNT	R/W	0h	Total number of frames of size 256 to 511 bytes received and transmitted

Copyright © 2025 Texas Instruments Incorporated

11.2.1.6.270 OCTETFRAMES512T1023 Register (Offset = 0003A078h) [Reset = 00000000h]

OCTETFRAMES512T1023 is shown in Table 11-568.

Return to the Summary Table.

Total number of frames of size 512 to 1023 bytes received and transmitted

Table 11-568. OCTETFRAMES512T1023 Register Field Descriptions

Bit	Field	Type	Reset	Description
31-0	COUNT	R/W	0h	Total number of frames of size 512 to 1023 bytes received and transmitted

Copyright © 2025 Texas Instruments Incorporated

11.2.1.6.271 OCTETFRAMES1024TUP Register (Offset = 0003A07Ch) [Reset = 00000000h]

OCTETFRAMES1024TUP is shown in Table 11-569.

Return to the Summary Table.

Total number of frames of size 1024 to rx_maxlen bytes received and 1024 bytes or greater transmitted

Table 11-569. OCTETFRAMES1024TUP Register Field Descriptions

Bit	Field	Type	Reset	Description
31-0	COUNT	R/W	0h	Total number of frames of size 1024 to rx_maxlen bytes received and 1024 bytes or greater transmitted

Copyright © 2025 Texas Instruments Incorporated

11.2.1.6.272 NETOCTETS Register (Offset = 0003A080h) [Reset = 00000000h]

NETOCTETS is shown in Table 11-570.

Return to the Summary Table.

Total number of bytes received and transmitted

Table 11-570. NETOCTETS Register Field Descriptions

Bit	Field	Type	Reset	Description
31-0	COUNT	R/W	0h	Total number of bytes received and transmitted

Copyright © 2025 Texas Instruments Incorporated

11.2.1.6.273 RX_BOTTOM_OF_FIFO_DROP Register (Offset = 0003A084h) [Reset = 00000000h]

RX_BOTTOM_OF_FIFO_DROP is shown in Table 11-571.

Return to the Summary Table.

Receive Bottom of FIFO Drop

Table 11-571. RX_BOTTOM_OF_FIFO_DROP Register Field Descriptions

Bit	Field	Type	Reset	Description
31-0	COUNT	R/W	0h	Receive Bottom of FIFO Drop

Copyright © 2025 Texas Instruments Incorporated

11.2.1.6.274 PORTMASK_DROP Register (Offset = 0003A088h) [Reset = 00000000h]

PORTMASK_DROP is shown in Table 11-572.

Return to the Summary Table.

Total number of dropped frames received due to portmask

Table 11-572. PORTMASK_DROP Register Field Descriptions

Bit	Field	Type	Reset	Description
31-0	COUNT	R/W	0h	Total number of dropped frames received due to portmask

Copyright © 2025 Texas Instruments Incorporated

11.2.1.6.275 RX_TOP_OF_FIFO_DROP Register (Offset = 0003A08Ch) [Reset = 00000000h]

RX_TOP_OF_FIFO_DROP is shown in Table 11-573.

Return to the Summary Table.

Receive Top of FIFO Drop

Table 11-573. RX_TOP_OF_FIFO_DROP Register Field Descriptions

Bit	Field	Type	Reset	Description
31-0	COUNT	R/W	0h	Receive Top of FIFO Drop

Copyright © 2025 Texas Instruments Incorporated

11.2.1.6.276 ALE_RATE_LIMIT_DROP Register (Offset = 0003A090h) [Reset = 00000000h]

ALE_RATE_LIMIT_DROP is shown in Table 11-574.

Return to the Summary Table.

Total number of dropped frames due to ALE Rate Limiting

Table 11-574. ALE_RATE_LIMIT_DROP Register Field Descriptions

Bit	Field	Type	Reset	Description
31-0	COUNT	R/W	0h	Total number of dropped frames due to ALE Rate Limiting

Copyright © 2025 Texas Instruments Incorporated

11.2.1.6.277 ALE_VID_INGRESS_DROP Register (Offset = 0003A094h) [Reset = 00000000h]

ALE_VID_INGRESS_DROP is shown in Table 11-575.

Return to the Summary Table.

Total number of dropped frames due to ALE VID Ingress

Table 11-575. ALE_VID_INGRESS_DROP Register Field Descriptions

Bit	Field	Type	Reset	Description
31-0	COUNT	R/W	0h	Total number of dropped frames due to ALE VID Ingress

Copyright © 2025 Texas Instruments Incorporated

11.2.1.6.278 ALE_DA_EQ_SA_DROP Register (Offset = 0003A098h) [Reset = 00000000h]

ALE_DA_EQ_SA_DROP is shown in Table 11-576.

Return to the Summary Table.

Total number of dropped frames due to DA=SA

Table 11-576. ALE_DA_EQ_SA_DROP Register Field Descriptions

Bit	Field	Type	Reset	Description
31-0	COUNT	R/W	0h	Total number of dropped frames due to DA=SA

Copyright © 2025 Texas Instruments Incorporated

11.2.1.6.279 ALE_BLOCK_DROP Register (Offset = 0003A09Ch) [Reset = 00000000h]

ALE_BLOCK_DROP is shown in Table 11-577.

Return to the Summary Table.

Total number of dropped frames due to ALE Block Mode

Table 11-577. ALE_BLOCK_DROP Register Field Descriptions

Bit	Field	Type	Reset	Description
31-0	COUNT	R/W	0h	Total number of dropped frames due to ALE Block Mode

Copyright © 2025 Texas Instruments Incorporated

11.2.1.6.280 ALE_SECURE_DROP Register (Offset = 0003A0A0h) [Reset = 00000000h]

ALE_SECURE_DROP is shown in Table 11-578.

Return to the Summary Table.

Total number of dropped frames due to ALE Secure Mode

Table 11-578. ALE_SECURE_DROP Register Field Descriptions

Bit	Field	Type	Reset	Description
31-0	COUNT	R/W	0h	Total number of dropped frames due to ALE Secure Mode

Copyright © 2025 Texas Instruments Incorporated

11.2.1.6.281 ALE_AUTH_DROP Register (Offset = 0003A0A4h) [Reset = 00000000h]

ALE_AUTH_DROP is shown in Table 11-579.

Return to the Summary Table.

Total number of dropped frames due to ALE Authentication

Table 11-579. ALE_AUTH_DROP Register Field Descriptions

Bit	Field	Type	Reset	Description
31-0	COUNT	R/W	0h	Total number of dropped frames due to ALE Authentication

Copyright © 2025 Texas Instruments Incorporated

11.2.1.6.282 ALE_UNKN_UNI Register (Offset = 0003A0A8h) [Reset = 00000000h]

ALE_UNKN_UNI is shown in Table 11-580.

Return to the Summary Table.

ALE Receive Unknown Unicast

Table 11-580. ALE_UNKN_UNI Register Field Descriptions

Bit	Field	Type	Reset	Description
31-0	COUNT	R/W	0h	ALE Receive Unknown Unicast

Copyright © 2025 Texas Instruments Incorporated

11.2.1.6.283 ALE_UNKN_UNI_BCNT Register (Offset = 0003A0ACh) [Reset = 00000000h]

ALE_UNKN_UNI_BCNT is shown in Table 11-581.

Return to the Summary Table.

ALE Receive Unknown Unicast Bytecount

Table 11-581. ALE_UNKN_UNI_BCNT Register Field Descriptions

Bit	Field	Type	Reset	Description
31-0	COUNT	R/W	0h	ALE Receive Unknown Unicast Bytecount

Copyright © 2025 Texas Instruments Incorporated

11.2.1.6.284 ALE_UNKN_MLT Register (Offset = 0003A0B0h) [Reset = 00000000h]

ALE_UNKN_MLT is shown in Table 11-582.

Return to the Summary Table.

ALE Receive Unknown Multicast

Table 11-582. ALE_UNKN_MLT Register Field Descriptions

Bit	Field	Type	Reset	Description
31-0	COUNT	R/W	0h	ALE Receive Unknown Multicast

Copyright © 2025 Texas Instruments Incorporated

11.2.1.6.285 ALE_UNKN_MLT_BCNT Register (Offset = 0003A0B4h) [Reset = 00000000h]

ALE_UNKN_MLT_BCNT is shown in Table 11-583.

Return to the Summary Table.

ALE Receive Unknown Multicast Bytecount

Table 11-583. ALE_UNKN_MLT_BCNT Register Field Descriptions

Bit	Field	Type	Reset	Description
31-0	COUNT	R/W	0h	ALE Receive Unknown Multicast Bytecount

Copyright © 2025 Texas Instruments Incorporated

11.2.1.6.286 ALE_UNKN_BRD Register (Offset = 0003A0B8h) [Reset = 00000000h]

ALE_UNKN_BRD is shown in Table 11-584.

Return to the Summary Table.

ALE Receive Unknown Broadcast

Table 11-584. ALE_UNKN_BRD Register Field Descriptions

Bit	Field	Type	Reset	Description
31-0	COUNT	R/W	0h	ALE Receive Unknown Broadcast

Copyright © 2025 Texas Instruments Incorporated

11.2.1.6.287 ALE_UNKN_BRD_BCNT Register (Offset = 0003A0BCh) [Reset = 00000000h]

ALE_UNKN_BRD_BCNT is shown in Table 11-585.

Return to the Summary Table.

ALE Receive Unknown Broadcast Bytecount

Table 11-585. ALE_UNKN_BRD_BCNT Register Field Descriptions

Bit	Field	Type	Reset	Description
31-0	COUNT	R/W	0h	ALE Receive Unknown Broadcast Bytecount

Copyright © 2025 Texas Instruments Incorporated

11.2.1.6.288 ALE_POL_MATCH Register (Offset = 0003A0C0h) [Reset = 00000000h]

ALE_POL_MATCH is shown in Table 11-586.

Return to the Summary Table.

ALE Policer Matched

Table 11-586. ALE_POL_MATCH Register Field Descriptions

Bit	Field	Type	Reset	Description
31-0	COUNT	R/W	0h	ALE Policer Matched

Copyright © 2025 Texas Instruments Incorporated

11.2.1.6.289 ALE_POL_MATCH_RED Register (Offset = 0003A0C4h) [Reset = 00000000h]

ALE_POL_MATCH_RED is shown in Table 11-587.

Return to the Summary Table.

ALE Policer Matched and Condition Red

Table 11-587. ALE_POL_MATCH_RED Register Field Descriptions

Bit	Field	Type	Reset	Description
31-0	COUNT	R/W	0h	ALE Policer Matched and Condition Red

Copyright © 2025 Texas Instruments Incorporated

11.2.1.6.290 ALE_POL_MATCH_YELLOW Register (Offset = 0003A0C8h) [Reset = 00000000h]

ALE_POL_MATCH_YELLOW is shown in Table 11-588.

Return to the Summary Table.

ALE Policer Matched and Condition Yellow

Table 11-588. ALE_POL_MATCH_YELLOW Register Field Descriptions

Bit	Field	Type	Reset	Description
31-0	COUNT	R/W	0h	ALE Policer Matched and Condition Yellow

Copyright © 2025 Texas Instruments Incorporated

11.2.1.6.291 ALE_MULT_SA_DROP Register (Offset = 0003A0CCh) [Reset = 00000000h]

ALE_MULT_SA_DROP is shown in Table 11-589.

Return to the Summary Table.

ALE Multicast Source Address Drop

Table 11-589. ALE_MULT_SA_DROP Register Field Descriptions

Bit	Field	Type	Reset	Description
31-0	COUNT	R/W	0h	ALE Multicast Source Address drop

Copyright © 2025 Texas Instruments Incorporated

11.2.1.6.292 ALE_DUAL_VLAN_DROP Register (Offset = 0003A0D0h) [Reset = 00000000h]

ALE_DUAL_VLAN_DROP is shown in Table 11-590.

Return to the Summary Table.

ALE Dual VLAN Drop

Table 11-590. ALE_DUAL_VLAN_DROP Register Field Descriptions

Bit	Field	Type	Reset	Description
31-0	COUNT	R/W	0h	ALE Dual VLAN drop

Copyright © 2025 Texas Instruments Incorporated

11.2.1.6.293 ALE_LEN_ERROR_DROP Register (Offset = 0003A0D4h) [Reset = 00000000h]

ALE_LEN_ERROR_DROP is shown in Table 11-591.

Return to the Summary Table.

ALE Length Error Drop

Table 11-591. ALE_LEN_ERROR_DROP Register Field Descriptions

Bit	Field	Type	Reset	Description
31-0	COUNT	R/W	0h	ALE Length Error drop

Copyright © 2025 Texas Instruments Incorporated

11.2.1.6.294 ALE_IP_NEXT_HDR_DROP Register (Offset = 0003A0D8h) [Reset = 00000000h]

ALE_IP_NEXT_HDR_DROP is shown in Table 11-592.

Return to the Summary Table.

ALE IP Next Header Drop

Table 11-592. ALE_IP_NEXT_HDR_DROP Register Field Descriptions

Bit	Field	Type	Reset	Description
31-0	COUNT	R/W	0h	ALE Next Header drop

Copyright © 2025 Texas Instruments Incorporated

11.2.1.6.295 ALE_IPV4_FRAG_DROP Register (Offset = 0003A0DCh) [Reset = 00000000h]

ALE_IPV4_FRAG_DROP is shown in Table 11-593.

Return to the Summary Table.

ALE IPV4 Frag Drop

Table 11-593. ALE_IPV4_FRAG_DROP Register Field Descriptions

Bit	Field	Type	Reset	Description
31-0	COUNT	R/W	0h	ALE IPV4 Fragment drop

Copyright © 2025 Texas Instruments Incorporated

11.2.1.6.296 TX_MEMORY_PROTECT_ERROR Register (Offset = 0003A17Ch) [Reset = X]

TX_MEMORY_PROTECT_ERROR is shown in Table 11-594.

Return to the Summary Table.

Transmit Memory Protect CRC Error

Table 11-594. TX_MEMORY_PROTECT_ERROR Register Field Descriptions

Bit	Field	Type	Reset	Description
31-8	RESERVED	R/W	X	
7-0	COUNT	R/W	0h	Transmit Memory Protect CRC Error

Copyright © 2025 Texas Instruments Incorporated

11.2.1.6.297 RXGOODFRAMES Register (Offset = 0003A200h) [Reset = 00000000h]

RXGOODFRAMES is shown in Table 11-548.

Return to the Summary Table.

Total number of good frames received

Table 11-595. RXGOODFRAMES Register Field Descriptions

Bit	Field	Type	Reset	Description
31-0	COUNT	R/W	0h	Total number of good frames received

Copyright © 2025 Texas Instruments Incorporated

11.2.1.6.298 RXBROADCASTFRAMES Register (Offset = 0003A204h) [Reset = 00000000h]

RXBROADCASTFRAMES is shown in Table 11-549.

Return to the Summary Table.

Total number of good broadcast frames received

Table 11-596. RXBROADCASTFRAMES Register Field Descriptions

Bit	Field	Type	Reset	Description
31-0	COUNT	R/W	0h	Total number of good broadcast frames received

Copyright © 2025 Texas Instruments Incorporated

11.2.1.6.299 RXMULTICASTFRAMES Register (Offset = 0003A208h) [Reset = 00000000h]

RXMULTICASTFRAMES is shown in Table 11-550.

Return to the Summary Table.

Total number of good multicast frames received

Table 11-597. RXMULTICASTFRAMES Register Field Descriptions

Bit	Field	Type	Reset	Description
31-0	COUNT	R/W	0h	Total number of good multicast frames received

Copyright © 2025 Texas Instruments Incorporated

11.2.1.6.300 RXPAUSEFRAMES Register (Offset = 0003A20Ch) [Reset = 00000000h]

RXPAUSEFRAMES is shown in Table 11-598.

Return to the Summary Table.

Total number of pause frames received

Table 11-598. RXPAUSEFRAMES Register Field Descriptions

Bit	Field	Type	Reset	Description
31-0	COUNT	R/W	0h	Total number of pause frames received

Copyright © 2025 Texas Instruments Incorporated

11.2.1.6.301 RXCRCERRORS Register (Offset = 0003A210h) [Reset = 00000000h]

RXCRCERRORS is shown in Table 11-551.

Return to the Summary Table.

Total number of CRC errors frames received

Table 11-599. RXCRCERRORS Register Field Descriptions

Bit	Field	Type	Reset	Description
31-0	COUNT	R/W	0h	Total number of CRC errors frames received

Copyright © 2025 Texas Instruments Incorporated

11.2.1.6.302 RXALIGNCODEERRORS Register (Offset = 0003A214h) [Reset = 00000000h]

RXALIGNCODEERRORS is shown in Table 11-600.

Return to the Summary Table.

Total number of alignment/code errors received

Table 11-600. RXALIGNCODEERRORS Register Field Descriptions

Bit	Field	Type	Reset	Description
31-0	COUNT	R/W	0h	Total number of alignment/code errors received

Copyright © 2025 Texas Instruments Incorporated

11.2.1.6.303 RXOVERSIZEDFRAMES Register (Offset = 0003A218h) [Reset = 00000000h]

RXOVERSIZEDFRAMES is shown in Table 11-552.

Return to the Summary Table.

Total number of oversized frames received

Table 11-601. RXOVERSIZEDFRAMES Register Field Descriptions

Bit	Field	Type	Reset	Description
31-0	COUNT	R/W	0h	Total number of oversized frames received

Copyright © 2025 Texas Instruments Incorporated

11.2.1.6.304 RXJABBERFRAMES Register (Offset = 0003A21Ch) [Reset = 00000000h]

RXJABBERFRAMES is shown in Table 11-602.

Return to the Summary Table.

Total number of jabber frames received

Table 11-602. RXJABBERFRAMES Register Field Descriptions

Bit	Field	Type	Reset	Description
31-0	COUNT	R/W	0h	Total number of jabber frames received

Copyright © 2025 Texas Instruments Incorporated

11.2.1.6.305 RXUNDERSIZEDFRAMES Register (Offset = 0003A220h) [Reset = 00000000h]

RXUNDERSIZEDFRAMES is shown in Table 11-553.

Return to the Summary Table.

Total number of undersized frames received

Table 11-603. RXUNDERSIZEDFRAMES Register Field Descriptions

Bit	Field	Type	Reset	Description
31-0	COUNT	R/W	0h	Total number of undersized frames received

Copyright © 2025 Texas Instruments Incorporated

11.2.1.6.306 RXFRAGMENTS Register (Offset = 0003A224h) [Reset = 00000000h]

RXFRAGMENTS is shown in Table 11-554.

Return to the Summary Table.

Total number of fragmented frames received

Table 11-604. RXFRAGMENTS Register Field Descriptions

Bit	Field	Type	Reset	Description
31-0	COUNT	R/W	0h	Total number of fragmented frames received

Copyright © 2025 Texas Instruments Incorporated

11.2.1.6.307 ALE_DROP Register (Offset = 0003A228h) [Reset = 00000000h]

ALE_DROP is shown in Table 11-555.

Return to the Summary Table.

Total number of frames dropped by the ALE

Table 11-605. ALE_DROP Register Field Descriptions

Bit	Field	Type	Reset	Description
31-0	COUNT	R/W	0h	Total number of frames dropped by the ALE

Copyright © 2025 Texas Instruments Incorporated

11.2.1.6.308 ALE_OVERRUN_DROP Register (Offset = 0003A22Ch) [Reset = 00000000h]

ALE_OVERRUN_DROP is shown in Table 11-556.

Return to the Summary Table.

Total number of overrun frames dropped by the ALE

Table 11-606. ALE_OVERRUN_DROP Register Field Descriptions

Bit	Field	Type	Reset	Description
31-0	COUNT	R/W	0h	Total number of overrun frames dropped by the ALE

Copyright © 2025 Texas Instruments Incorporated

11.2.1.6.309 RXOCTETS Register (Offset = 0003A230h) [Reset = 00000000h]

RXOCTETS is shown in Table 11-557.

Return to the Summary Table.

Total number of received bytes in good frames

Table 11-607. RXOCTETS Register Field Descriptions

Bit	Field	Type	Reset	Description
31-0	COUNT	R/W	0h	Total number of received bytes in good frames

Copyright © 2025 Texas Instruments Incorporated

11.2.1.6.310 TXGOODFRAMES Register (Offset = 0003A234h) [Reset = 00000000h]

TXGOODFRAMES is shown in Table 11-558.

Return to the Summary Table.

Total number of good frames transmitted

Table 11-608. TXGOODFRAMES Register Field Descriptions

Bit	Field	Type	Reset	Description
31-0	COUNT	R/W	0h	Total number of good frames transmitted

Copyright © 2025 Texas Instruments Incorporated

11.2.1.6.311 TXBROADCASTFRAMES Register (Offset = 0003A238h) [Reset = 00000000h]

TXBROADCASTFRAMES is shown in Table 11-559.

Return to the Summary Table.

Total number of good broadcast frames transmitted

Table 11-609. TXBROADCASTFRAMES Register Field Descriptions

Bit	Field	Type	Reset	Description
31-0	COUNT	R/W	0h	Total number of good broadcast frames transmitted

Copyright © 2025 Texas Instruments Incorporated

11.2.1.6.312 TXMULTICASTFRAMES Register (Offset = 0003A23Ch) [Reset = 00000000h]

TXMULTICASTFRAMES is shown in Table 11-560.

Return to the Summary Table.

Total number of good multicast frames transmitted

Table 11-610. TXMULTICASTFRAMES Register Field Descriptions

Bit	Field	Type	Reset	Description
31-0	COUNT	R/W	0h	Total number of good multicast frames transmitted

Copyright © 2025 Texas Instruments Incorporated

11.2.1.6.313 TXPAUSEFRAMES Register (Offset = 0003A240h) [Reset = 00000000h]

TXPAUSEFRAMES is shown in Table 11-611.

Return to the Summary Table.

Total number of pause frames transmitted

Table 11-611. TXPAUSEFRAMES Register Field Descriptions

Bit	Field	Type	Reset	Description
31-0	COUNT	R/W	0h	Total number of pause frames transmitted

Copyright © 2025 Texas Instruments Incorporated

11.2.1.6.314 TXDEFERREDFRAMES Register (Offset = 0003A244h) [Reset = 00000000h]

TXDEFERREDFRAMES is shown in Table 11-612.

Return to the Summary Table.

Total number of deferred frames transmitted

Table 11-612. TXDEFERREDFRAMES Register Field Descriptions

Bit	Field	Type	Reset	Description
31-0	COUNT	R/W	0h	Total number of deferred frames transmitted

Copyright © 2025 Texas Instruments Incorporated

11.2.1.6.315 TXCOLLISIONFRAMES Register (Offset = 0003A248h) [Reset = 00000000h]

TXCOLLISIONFRAMES is shown in Table 11-613.

Return to the Summary Table.

Total number of transmitted frames experiencing a collision

Table 11-613. TXCOLLISIONFRAMES Register Field Descriptions

Bit	Field	Type	Reset	Description
31-0	COUNT	R/W	0h	Total number of transmitted frames experiencing a collision

Copyright © 2025 Texas Instruments Incorporated

11.2.1.6.316 TXSINGLECOLLFRAMES Register (Offset = 0003A24Ch) [Reset = 00000000h]

TXSINGLECOLLFRAMES is shown in Table 11-561.

Return to the Summary Table.

Total number of transmitted frames experiencing a single collision

Table 11-614. TXSINGLECOLLFRAMES Register Field Descriptions

Bit	Field	Type	Reset	Description
31-0	COUNT	R/W	0h	Total number of transmitted frames experiencing a single collision

Copyright © 2025 Texas Instruments Incorporated

11.2.1.6.317 TXMULTCOLLFRAMES Register (Offset = 0003A250h) [Reset = 00000000h]

TXMULTCOLLFRAMES is shown in Table 11-562.

Return to the Summary Table.

Total number of transmitted frames experiencing multiple collisions

Table 11-615. TXMULTCOLLFRAMES Register Field Descriptions

Bit	Field	Type	Reset	Description
31-0	COUNT	R/W	0h	Total number of transmitted frames experiencing multiple collisions

Copyright © 2025 Texas Instruments Incorporated

11.2.1.6.318 TXEXCESSIVECOLLISIONS Register (Offset = 0003A254h) [Reset = 00000000h]

TXEXCESSIVECOLLISIONS is shown in Table 11-616.

Return to the Summary Table.

Total number of transmitted frames abandoned due to excessive collisions

Table 11-616. TXEXCESSIVECOLLISIONS Register Field Descriptions

Bit	Field	Type	Reset	Description
31-0	COUNT	R/W	0h	Total number of transmitted frames abandoned due to excessive collisions

Copyright © 2025 Texas Instruments Incorporated

11.2.1.6.319 TXLATECOLLISIONS Register (Offset = 0003A258h) [Reset = 00000000h]

TXLATECOLLISIONS is shown in Table 11-617.

Return to the Summary Table.

Total number of transmitted frames abandoned due to a late collision

Table 11-617. TXLATECOLLISIONS Register Field Descriptions

Bit	Field	Type	Reset	Description
31-0	COUNT	R/W	0h	Total number of transmitted frames abandoned due to a late collision

Copyright © 2025 Texas Instruments Incorporated

11.2.1.6.320 RXIPGERROR Register (Offset = 0003A25Ch) [Reset = 00000000h]

RXIPGERROR is shown in Table 11-618.

Return to the Summary Table.

Total number of receive inter-packet gap errors (10G only)

Table 11-618. RXIPGERROR Register Field Descriptions

Bit	Field	Type	Reset	Description
31-0	COUNT	R/W	0h	Total number of receive inter-packet gap errors (10G only)

Copyright © 2025 Texas Instruments Incorporated

11.2.1.6.321 TXCARRIERSENSEERRORS Register (Offset = 0003A260h) [Reset = 00000000h]

TXCARRIERSENSEERRORS is shown in Table 11-619.

Return to the Summary Table.

Total number of transmitted frames that experienced a carrier loss

Table 11-619. TXCARRIERSENSEERRORS Register Field Descriptions

Bit	Field	Type	Reset	Description
31-0	COUNT	R/W	0h	Total number of transmitted frames that experienced a carrier loss

Copyright © 2025 Texas Instruments Incorporated

11.2.1.6.322 TXOCTETS Register (Offset = 0003A264h) [Reset = 00000000h]

TXOCTETS is shown in Table 11-563.

Return to the Summary Table.

Total number of bytes in all good frames transmitted

Table 11-620. TXOCTETS Register Field Descriptions

Bit	Field	Type	Reset	Description
31-0	COUNT	R/W	0h	Total number of bytes in all good frames transmitted

Copyright © 2025 Texas Instruments Incorporated

11.2.1.6.323 OCTETFRAMES64 Register (Offset = 0003A268h) [Reset = 00000000h]

OCTETFRAMES64 is shown in Table 11-564.

Return to the Summary Table.

Total number of 64-byte frames received and transmitted

Table 11-621. OCTETFRAMES64 Register Field Descriptions

Bit	Field	Type	Reset	Description
31-0	COUNT	R/W	0h	Total number of 64-byte frames received and transmitted

Copyright © 2025 Texas Instruments Incorporated

11.2.1.6.324 OCTETFRAMES65T127 Register (Offset = 0003A26Ch) [Reset = 00000000h]

OCTETFRAMES65T127 is shown in Table 11-565.

Return to the Summary Table.

Total number of frames of size 65 to 127 bytes received and transmitted

Table 11-622. OCTETFRAMES65T127 Register Field Descriptions

Bit	Field	Type	Reset	Description
31-0	COUNT	R/W	0h	Total number of frames of size 65 to 127 bytes received and transmitted

Copyright © 2025 Texas Instruments Incorporated

11.2.1.6.325 OCTETFRAMES128T255 Register (Offset = 0003A270h) [Reset = 00000000h]

OCTETFRAMES128T255 is shown in Table 11-566.

Return to the Summary Table.

Total number of frames of size 128 to 255 bytes received and transmitted

Table 11-623. OCTETFRAMES128T255 Register Field Descriptions

Bit	Field	Type	Reset	Description
31-0	COUNT	R/W	0h	Total number of frames of size 128 to 255 bytes received and transmitted

Copyright © 2025 Texas Instruments Incorporated

11.2.1.6.326 OCTETFRAMES256T511 Register (Offset = 0003A274h) [Reset = 00000000h]

OCTETFRAMES256T511 is shown in Table 11-567.

Return to the Summary Table.

Total number of frames of size 256 to 511 bytes received and transmitted

Table 11-624. OCTETFRAMES256T511 Register Field Descriptions

Bit	Field	Type	Reset	Description
31-0	COUNT	R/W	0h	Total number of frames of size 256 to 511 bytes received and transmitted

Copyright © 2025 Texas Instruments Incorporated

11.2.1.6.327 OCTETFRAMES512T1023 Register (Offset = 0003A278h) [Reset = 00000000h]

OCTETFRAMES512T1023 is shown in Table 11-568.

Return to the Summary Table.

Total number of frames of size 512 to 1023 bytes received and transmitted

Table 11-625. OCTETFRAMES512T1023 Register Field Descriptions

Bit	Field	Type	Reset	Description
31-0	COUNT	R/W	0h	Total number of frames of size 512 to 1023 bytes received and transmitted

Copyright © 2025 Texas Instruments Incorporated

11.2.1.6.328 OCTETFRAMES1024TUP Register (Offset = 0003A27Ch) [Reset = 00000000h]

OCTETFRAMES1024TUP is shown in Table 11-569.

Return to the Summary Table.

Total number of frames of size 1024 to rx_maxlen bytes received and 1024 bytes or greater transmitted

Table 11-626. OCTETFRAMES1024TUP Register Field Descriptions

Bit	Field	Type	Reset	Description
31-0	COUNT	R/W	0h	Total number of frames of size 1024 to rx_maxlen bytes received and 1024 bytes or greater transmitted

Copyright © 2025 Texas Instruments Incorporated

11.2.1.6.329 NETOCTETS Register (Offset = 0003A280h) [Reset = 00000000h]

NETOCTETS is shown in Table 11-570.

Return to the Summary Table.

Total number of bytes received and transmitted

Table 11-627. NETOCTETS Register Field Descriptions

Bit	Field	Type	Reset	Description
31-0	COUNT	R/W	0h	Total number of bytes received and transmitted

Copyright © 2025 Texas Instruments Incorporated

11.2.1.6.330 RX_BOTTOM_OF_FIFO_DROP Register (Offset = 0003A284h) [Reset = 00000000h]

RX_BOTTOM_OF_FIFO_DROP is shown in Table 11-571.

Return to the Summary Table.

Receive Bottom of FIFO Drop

Table 11-628. RX_BOTTOM_OF_FIFO_DROP Register Field Descriptions

Bit	Field	Type	Reset	Description
31-0	COUNT	R/W	0h	Receive Bottom of FIFO Drop

Copyright © 2025 Texas Instruments Incorporated

11.2.1.6.331 PORTMASK_DROP Register (Offset = 0003A288h) [Reset = 00000000h]

PORTMASK_DROP is shown in Table 11-572.

Return to the Summary Table.

Total number of dropped frames received due to portmask

Table 11-629. PORTMASK_DROP Register Field Descriptions

Bit	Field	Type	Reset	Description
31-0	COUNT	R/W	0h	Total number of dropped frames received due to portmask

Copyright © 2025 Texas Instruments Incorporated

11.2.1.6.332 RX_TOP_OF_FIFO_DROP Register (Offset = 0003A28Ch) [Reset = 00000000h]

RX_TOP_OF_FIFO_DROP is shown in Table 11-573.

Return to the Summary Table.

Receive Top of FIFO Drop

Table 11-630. RX_TOP_OF_FIFO_DROP Register Field Descriptions

Bit	Field	Type	Reset	Description
31-0	COUNT	R/W	0h	Receive Top of FIFO Drop

Copyright © 2025 Texas Instruments Incorporated

11.2.1.6.333 ALE_RATE_LIMIT_DROP Register (Offset = 0003A290h) [Reset = 00000000h]

ALE_RATE_LIMIT_DROP is shown in Table 11-574.

Return to the Summary Table.

Total number of dropped frames due to ALE Rate Limiting

Table 11-631. ALE_RATE_LIMIT_DROP Register Field Descriptions

Bit	Field	Type	Reset	Description
31-0	COUNT	R/W	0h	Total number of dropped frames due to ALE Rate Limiting

Copyright © 2025 Texas Instruments Incorporated

11.2.1.6.334 ALE_VID_INGRESS_DROP Register (Offset = 0003A294h) [Reset = 00000000h]

ALE_VID_INGRESS_DROP is shown in Table 11-575.

Return to the Summary Table.

Total number of dropped frames due to ALE VID Ingress

Table 11-632. ALE_VID_INGRESS_DROP Register Field Descriptions

Bit	Field	Type	Reset	Description
31-0	COUNT	R/W	0h	Total number of dropped frames due to ALE VID Ingress

Copyright © 2025 Texas Instruments Incorporated

11.2.1.6.335 ALE_DA_EQ_SA_DROP Register (Offset = 0003A298h) [Reset = 00000000h]

ALE_DA_EQ_SA_DROP is shown in Table 11-576.

Return to the Summary Table.

Total number of dropped frames due to DA=SA

Table 11-633. ALE_DA_EQ_SA_DROP Register Field Descriptions

Bit	Field	Type	Reset	Description
31-0	COUNT	R/W	0h	Total number of dropped frames due to DA=SA

Copyright © 2025 Texas Instruments Incorporated

11.2.1.6.336 ALE_BLOCK_DROP Register (Offset = 0003A29Ch) [Reset = 00000000h]

ALE_BLOCK_DROP is shown in Table 11-577.

Return to the Summary Table.

Total number of dropped frames due to ALE Block Mode

Table 11-634. ALE_BLOCK_DROP Register Field Descriptions

Bit	Field	Type	Reset	Description
31-0	COUNT	R/W	0h	Total number of dropped frames due to ALE Block Mode

Copyright © 2025 Texas Instruments Incorporated

11.2.1.6.337 ALE_SECURE_DROP Register (Offset = 0003A2A0h) [Reset = 00000000h]

ALE_SECURE_DROP is shown in Table 11-578.

Return to the Summary Table.

Total number of dropped frames due to ALE Secure Mode

Table 11-635. ALE_SECURE_DROP Register Field Descriptions

Bit	Field	Type	Reset	Description
31-0	COUNT	R/W	0h	Total number of dropped frames due to ALE Secure Mode

Copyright © 2025 Texas Instruments Incorporated

11.2.1.6.338 ALE_AUTH_DROP Register (Offset = 0003A2A4h) [Reset = 00000000h]

ALE_AUTH_DROP is shown in Table 11-579.

Return to the Summary Table.

Total number of dropped frames due to ALE Authentication

Table 11-636. ALE_AUTH_DROP Register Field Descriptions

Bit	Field	Type	Reset	Description
31-0	COUNT	R/W	0h	Total number of dropped frames due to ALE Authentication

Copyright © 2025 Texas Instruments Incorporated

11.2.1.6.339 ALE_UNKN_UNI Register (Offset = 0003A2A8h) [Reset = 00000000h]

ALE_UNKN_UNI is shown in Table 11-580.

Return to the Summary Table.

ALE Receive Unknown Unicast

Table 11-637. ALE_UNKN_UNI Register Field Descriptions

Bit	Field	Type	Reset	Description
31-0	COUNT	R/W	0h	ALE Receive Unknown Unicast

Copyright © 2025 Texas Instruments Incorporated

11.2.1.6.340 ALE_UNKN_UNI_BCNT Register (Offset = 0003A2ACh) [Reset = 00000000h]

ALE_UNKN_UNI_BCNT is shown in Table 11-581.

Return to the Summary Table.

ALE Receive Unknown Unicast Bytecount

Table 11-638. ALE_UNKN_UNI_BCNT Register Field Descriptions

Bit	Field	Type	Reset	Description
31-0	COUNT	R/W	0h	ALE Receive Unknown Unicast Bytecount

Copyright © 2025 Texas Instruments Incorporated

11.2.1.6.341 ALE_UNKN_MLT Register (Offset = 0003A2B0h) [Reset = 00000000h]

ALE_UNKN_MLT is shown in Table 11-582.

Return to the Summary Table.

ALE Receive Unknown Multicast

Table 11-639. ALE_UNKN_MLT Register Field Descriptions

Bit	Field	Type	Reset	Description
31-0	COUNT	R/W	0h	ALE Receive Unknown Multicast

Copyright © 2025 Texas Instruments Incorporated

11.2.1.6.342 ALE_UNKN_MLT_BCNT Register (Offset = 0003A2B4h) [Reset = 00000000h]

ALE_UNKN_MLT_BCNT is shown in Table 11-583.

Return to the Summary Table.

ALE Receive Unknown Multicast Bytecount

Table 11-640. ALE_UNKN_MLT_BCNT Register Field Descriptions

Bit	Field	Type	Reset	Description
31-0	COUNT	R/W	0h	ALE Receive Unknown Multicast Bytecount

Copyright © 2025 Texas Instruments Incorporated

11.2.1.6.343 ALE_UNKN_BRD Register (Offset = 0003A2B8h) [Reset = 00000000h]

ALE_UNKN_BRD is shown in Table 11-584.

Return to the Summary Table.

ALE Receive Unknown Broadcast

Table 11-641. ALE_UNKN_BRD Register Field Descriptions

Bit	Field	Type	Reset	Description
31-0	COUNT	R/W	0h	ALE Receive Unknown Broadcast

Copyright © 2025 Texas Instruments Incorporated

11.2.1.6.344 ALE_UNKN_BRD_BCNT Register (Offset = 0003A2BCh) [Reset = 00000000h]

ALE_UNKN_BRD_BCNT is shown in Table 11-585.

Return to the Summary Table.

ALE Receive Unknown Broadcast Bytecount

Table 11-642. ALE_UNKN_BRD_BCNT Register Field Descriptions

Bit	Field	Type	Reset	Description
31-0	COUNT	R/W	0h	ALE Receive Unknown Broadcast Bytecount

Copyright © 2025 Texas Instruments Incorporated

11.2.1.6.345 ALE_POL_MATCH Register (Offset = 0003A2C0h) [Reset = 00000000h]

ALE_POL_MATCH is shown in Table 11-586.

Return to the Summary Table.

ALE Policer Matched

Table 11-643. ALE_POL_MATCH Register Field Descriptions

Bit	Field	Type	Reset	Description
31-0	COUNT	R/W	0h	ALE Policer Matched

Copyright © 2025 Texas Instruments Incorporated

11.2.1.6.346 ALE_POL_MATCH_RED Register (Offset = 0003A2C4h) [Reset = 00000000h]

ALE_POL_MATCH_RED is shown in Table 11-587.

Return to the Summary Table.

ALE Policer Matched and Condition Red

Table 11-644. ALE_POL_MATCH_RED Register Field Descriptions

Bit	Field	Type	Reset	Description
31-0	COUNT	R/W	0h	ALE Policer Matched and Condition Red

Copyright © 2025 Texas Instruments Incorporated

11.2.1.6.347 ALE_POL_MATCH_YELLOW Register (Offset = 0003A2C8h) [Reset = 00000000h]

ALE_POL_MATCH_YELLOW is shown in Table 11-588.

Return to the Summary Table.

ALE Policer Matched and Condition Yellow

Table 11-645. ALE_POL_MATCH_YELLOW Register Field Descriptions

Bit	Field	Type	Reset	Description
31-0	COUNT	R/W	0h	ALE Policer Matched and Condition Yellow

Copyright © 2025 Texas Instruments Incorporated

11.2.1.6.348 ALE_MULT_SA_DROP Register (Offset = 0003A2CCh) [Reset = 00000000h]

ALE_MULT_SA_DROP is shown in Table 11-589.

Return to the Summary Table.

ALE Multicast Source Address Drop

Table 11-646. ALE_MULT_SA_DROP Register Field Descriptions

Bit	Field	Type	Reset	Description
31-0	COUNT	R/W	0h	ALE Multicast Source Address drop

Copyright © 2025 Texas Instruments Incorporated

11.2.1.6.349 ALE_DUAL_VLAN_DROP Register (Offset = 0003A2D0h) [Reset = 00000000h]

ALE_DUAL_VLAN_DROP is shown in Table 11-590.

Return to the Summary Table.

ALE Dual VLAN Drop

Table 11-647. ALE_DUAL_VLAN_DROP Register Field Descriptions

Bit	Field	Type	Reset	Description
31-0	COUNT	R/W	0h	ALE Dual VLAN drop

Copyright © 2025 Texas Instruments Incorporated

11.2.1.6.350 ALE_LEN_ERROR_DROP Register (Offset = 0003A2D4h) [Reset = 00000000h]

ALE_LEN_ERROR_DROP is shown in Table 11-591.

Return to the Summary Table.

ALE Length Error Drop

Table 11-648. ALE_LEN_ERROR_DROP Register Field Descriptions

Bit	Field	Type	Reset	Description
31-0	COUNT	R/W	0h	ALE Length Error drop

Copyright © 2025 Texas Instruments Incorporated

11.2.1.6.351 ALE_IP_NEXT_HDR_DROP Register (Offset = 0003A2D8h) [Reset = 00000000h]

ALE_IP_NEXT_HDR_DROP is shown in Table 11-592.

Return to the Summary Table.

ALE IP Next Header Drop

Table 11-649. ALE_IP_NEXT_HDR_DROP Register Field Descriptions

Bit	Field	Type	Reset	Description
31-0	COUNT	R/W	0h	ALE Next Header drop

Copyright © 2025 Texas Instruments Incorporated

11.2.1.6.352 ALE_IPV4_FRAG_DROP Register (Offset = 0003A2DCh) [Reset = 00000000h]

ALE_IPV4_FRAG_DROP is shown in Table 11-593.

Return to the Summary Table.

ALE IPV4 Frag Drop

Table 11-650. ALE_IPV4_FRAG_DROP Register Field Descriptions

Bit	Field	Type	Reset	Description
31-0	COUNT	R/W	0h	ALE IPV4 Fragment drop

Copyright © 2025 Texas Instruments Incorporated

11.2.1.6.353 TX_MEMORY_PROTECT_ERROR Register (Offset = 0003A37Ch) [Reset = X]

TX_MEMORY_PROTECT_ERROR is shown in Table 11-594.

Return to the Summary Table.

Transmit Memory Protect CRC Error

Table 11-651. TX_MEMORY_PROTECT_ERROR Register Field Descriptions

Bit	Field	Type	Reset	Description
31-8	RESERVED	R/W	X	
7-0	COUNT	R/W	0h	Transmit Memory Protect CRC Error

Copyright © 2025 Texas Instruments Incorporated

11.2.1.6.354 ENET_PN_TX_PRI_REG_y Register (Offset = 0003A380h + formula) [Reset = 00000000h]

ENET_PN_TX_PRI_REG_y is shown in Table 11-652.

Return to the Summary Table.

ENET Port n PRIORITY N Packet Count

Offset = 0003A380h + (y * 4h); where y = 0h to 7h

Table 11-652. ENET_PN_TX_PRI_REG_y Register Field Descriptions

Bit	Field	Type	Reset	Description
31-0	PN_TX_PRIN	R/W	0h	ENET TX Priority Packet Count

Copyright © 2025 Texas Instruments Incorporated

11.2.1.6.355 ENET_PN_TX_PRI_BCNT_REG_y Register (Offset = 0003A3A0h + formula) [Reset = 00000000h]

ENET_PN_TX_PRI_BCNT_REG_y is shown in Table 11-653.

Return to the Summary Table.

ENET Port n PRIORITY N Packet Byte Count

Offset = 0003A3A0h + (y * 4h); where y = 0h to 7h

Table 11-653. ENET_PN_TX_PRI_BCNT_REG_y Register Field Descriptions

Bit	Field	Type	Reset	Description
31-0	PN_TX_PRIN_BCNT	R/W	0h	ENET Port n PRIORITY N Packet Byte Count

Copyright © 2025 Texas Instruments Incorporated

11.2.1.6.356 ENET_PN_TX_PRI_DROP_REG_y Register (Offset = 0003A3C0h + formula) [Reset = 00000000h]

ENET_PN_TX_PRI_DROP_REG_y is shown in Table 11-654.

Return to the Summary Table.

ENET Port n PRIORITY N Packet Drop Count

Offset = 0003A3C0h + (y * 4h); where y = 0h to 7h

Table 11-654. ENET_PN_TX_PRI_DROP_REG_y Register Field Descriptions

Bit	Field	Type	Reset	Description
31-0	PN_TX_PRIN_DROP	R/W	0h	ENET Port n PRIORITY N Packet Drop Count

Copyright © 2025 Texas Instruments Incorporated

11.2.1.6.357 ENET_PN_TX_PRI_DROP_BCNT_REG_y Register (Offset = 0003A3E0h + formula) [Reset = 00000000h]

ENET_PN_TX_PRI_DROP_BCNT_REG_y is shown in Table 11-655.

Return to the Summary Table.

ENET Port n PRIORITY N Packet Drop Byte Count

Offset = 0003A3E0h + (y * 4h); where y = 0h to 7h

Table 11-655. ENET_PN_TX_PRI_DROP_BCNT_REG_y Register Field Descriptions

Bit	Field	Type	Reset	Description
31-0	PN_TX_PRIN_DROP_BCNT	R/W	0h	ENET Port n PRIORITY N Packet Drop Byte Count

Copyright © 2025 Texas Instruments Incorporated

11.2.1.6.358 IDVER_REG Register (Offset = 0003D000h) [Reset = 4E8A010Bh]

IDVER_REG is shown in Table 11-656.

Return to the Summary Table.

Identification and Version Register

Table 11-656. IDVER_REG Register Field Descriptions

Bit	Field	Type	Reset	Description
31-16	TX_IDENT	R	4E8Ah	Identification value
15-11	RTL_VER	R	0h	RTL version value
10-8	MAJOR_VER	R	1h	Major version value
7-0	MINOR_VER	R	Bh	Minor version value

Copyright © 2025 Texas Instruments Incorporated

11.2.1.6.359 CONTROL_REG Register (Offset = 0003D004h) [Reset = X]

CONTROL_REG is shown in Table 11-317.

Return to the Summary Table.

Time Sync Control Register

Table 11-657. CONTROL_REG Register Field Descriptions

Bit	Field	Type	Reset	Description
31-28	TS_SYNC_SEL	R/W	0h	TS_SYNC output timestamp counter bit select
27-18	RESERVED	R/W	X	
17	TS_GENF_CLR_EN	R/W	0h	Enable for GENF clear when length is zero
16	TS_RX_NO_EVENT	R/W	0h	Receive Produces no Events
15	HW8_TS_PUSH_EN	R/W	0h	Hardware push 8 enable
14	HW7_TS_PUSH_EN	R/W	0h	Hardware push 7 enable
13	HW6_TS_PUSH_EN	R/W	0h	Hardware push 6 enable
12	HW5_TS_PUSH_EN	R/W	0h	Hardware push 5 enable
11	HW4_TS_PUSH_EN	R/W	0h	Hardware push 4 enable
10	HW3_TS_PUSH_EN	R/W	0h	Hardware push 3 enable
9	HW2_TS_PUSH_EN	R/W	0h	Hardware push 2 enable
8	HW1_TS_PUSH_EN	R/W	0h	Hardware push 1 enable
7	TS_PPM_DIR	R/W	0h	Timestamp PPM Direction
6	TS_COMP_TOG	R/W	0h	Timestamp Compare Toggle mode: 0=TS_COMP is in non-toggle mode, 1=TS_COMP is in toggle mode
5	MODE	R/W	0h	Timestamp mode
4	SEQUENCE_EN	R/W	0h	Sequence Enable
3	TSTAMP_EN	R/W	0h	Host Receive Timestamp Enable
2	TS_COMP_POLARITY	R/W	1h	TS_COMP polarity
1	INT_TEST	R/W	0h	Interrupt test
0	CPTS_EN	R/W	0h	Time sync enable

Copyright © 2025 Texas Instruments Incorporated

11.2.1.6.360 RFTCLK_SEL_REG Register (Offset = 0003D008h) [Reset = X]

RFTCLK_SEL_REG is shown in Table 11-658.

Return to the Summary Table.

RFTCLK Select Register

Table 11-658. RFTCLK_SEL_REG Register Field Descriptions

Bit	Field	Type	Reset	Description
31-5	RESERVED	R/W	X	
4-0	RFTCLK_SEL	R/W	0h	Reference clock select

Copyright © 2025 Texas Instruments Incorporated

11.2.1.6.361 TS_PUSH_REG Register (Offset = 0003D00Ch) [Reset = X]

TS_PUSH_REG is shown in Table 11-659.

Return to the Summary Table.

Time Stamp Event Push Register

Table 11-659. TS_PUSH_REG Register Field Descriptions

Bit	Field	Type	Reset	Description
31-1	RESERVED	W	X	
0	TS_PUSH	W	0h	Time stamp event push

Copyright © 2025 Texas Instruments Incorporated

11.2.1.6.362 TS_LOAD_VAL_REG Register (Offset = 0003D010h) [Reset = 00000000h]

TS_LOAD_VAL_REG is shown in Table 11-660.

Return to the Summary Table.

Time Stamp Load Low Value Register

Table 11-660. TS_LOAD_VAL_REG Register Field Descriptions

Bit	Field	Type	Reset	Description
31-0	TS_LOAD_VAL	R/W	0h	Time stamp load low value

Copyright © 2025 Texas Instruments Incorporated

11.2.1.6.363 TS_LOAD_EN_REG Register (Offset = 0003D014h) [Reset = X]

TS_LOAD_EN_REG is shown in Table 11-661.

Return to the Summary Table.

Time Stamp Load Enable Register

Table 11-661. TS_LOAD_EN_REG Register Field Descriptions

Bit	Field	Type	Reset	Description
31-1	RESERVED	W	X	
0	TS_LOAD_EN	W	0h	Time stamp load enable

Copyright © 2025 Texas Instruments Incorporated

11.2.1.6.364 TS_COMP_VAL_REG Register (Offset = 0003D018h) [Reset = 00000000h]

TS_COMP_VAL_REG is shown in Table 11-662.

Return to the Summary Table.

Time Stamp Comparison Low Value Register

Table 11-662. TS_COMP_VAL_REG Register Field Descriptions

Bit	Field	Type	Reset	Description
31-0	TS_COMP_VAL	R/W	0h	Time stamp comparison low value

Copyright © 2025 Texas Instruments Incorporated

11.2.1.6.365 TS_COMP_LEN_REG Register (Offset = 0003D01Ch) [Reset = 00000000h]

TS_COMP_LEN_REG is shown in Table 11-663.

Return to the Summary Table.

Time Stamp Comparison Length Register

Table 11-663. TS_COMP_LEN_REG Register Field Descriptions

Bit	Field	Type	Reset	Description
31-0	TS_COMP_LENGTH	R/W	0h	Time stamp comparison length

Copyright © 2025 Texas Instruments Incorporated

11.2.1.6.366 INTSTAT_RAW_REG Register (Offset = 0003D020h) [Reset = X]

INTSTAT_RAW_REG is shown in Table 11-664.

Return to the Summary Table.

Interrupt Status Register Raw

Table 11-664. INTSTAT_RAW_REG Register Field Descriptions

Bit	Field	Type	Reset	Description
31-1	RESERVED	R/W	X	
0	TS_PEND_RAW	R/W	0h	TS_PEND_RAW int read (before enable)

Copyright © 2025 Texas Instruments Incorporated

11.2.1.6.367 INTSTAT_MASKED_REG Register (Offset = 0003D024h) [Reset = X]

INTSTAT_MASKED_REG is shown in Table 11-665.

Return to the Summary Table.

Interrupt Status Register Masked

Table 11-665. INTSTAT_MASKED_REG Register Field Descriptions

Bit	Field	Type	Reset	Description
31-1	RESERVED	R	X	
0	TS_PEND	R	0h	TS_PEND masked interrupt read (after enable)

Copyright © 2025 Texas Instruments Incorporated

11.2.1.6.368 INT_ENABLE_REG Register (Offset = 0003D028h) [Reset = X]

INT_ENABLE_REG is shown in Table 11-666.

Return to the Summary Table.

Interrupt Enable Register

Table 11-666. INT_ENABLE_REG Register Field Descriptions

Bit	Field	Type	Reset	Description
31-1	RESERVED	R/W	X	
0	TS_PEND_EN	R/W	0h	TS_PEND masked interrupt enable

Copyright © 2025 Texas Instruments Incorporated

11.2.1.6.369 TS_COMP_NUDGE_REG Register (Offset = 0003D02Ch) [Reset = X]

TS_COMP_NUDGE_REG is shown in Table 11-667.

Return to the Summary Table.

Time Stamp Comparison Nudge Register

Table 11-667. TS_COMP_NUDGE_REG Register Field Descriptions

Bit	Field	Type	Reset	Description
31-8	RESERVED	R/W	X	
7-0	NUDGE	R/W	0h	This 2s complement number is added to the ts_comp_length value to increase or decrease the TS_COMP length by the nudge amount

Copyright © 2025 Texas Instruments Incorporated

11.2.1.6.370 EVENT_POP_REG Register (Offset = 0003D030h) [Reset = X]

EVENT_POP_REG is shown in Table 11-668.

Return to the Summary Table.

Event Pop Register

Table 11-668. EVENT_POP_REG Register Field Descriptions

Bit	Field	Type	Reset	Description
31-1	RESERVED	W	X	
0	EVENT_POP	W	0h	Event pop

Copyright © 2025 Texas Instruments Incorporated

11.2.1.6.371 EVENT_0_REG Register (Offset = 0003D034h) [Reset = 00000000h]

EVENT_0_REG is shown in Table 11-669.

Return to the Summary Table.

Event 0 Register

Table 11-669. EVENT_0_REG Register Field Descriptions

Bit	Field	Type	Reset	Description
31-0	TIME_STAMP	R	0h	Time Stamp

Copyright © 2025 Texas Instruments Incorporated

11.2.1.6.372 EVENT_1_REG Register (Offset = 0003D038h) [Reset = X]

EVENT_1_REG is shown in Table 11-670.

Return to the Summary Table.

Event 1 Register

Table 11-670. EVENT_1_REG Register Field Descriptions

Bit	Field	Type	Reset	Description
31-30	RESERVED	R	X	
29	PREMPT_QUEUE	R	0h	Prempt QUEUE
28-24	PORT_NUMBER	R	0h	Port number
23-20	EVENT_TYPE	R	0h	Event type
19-16	MESSAGE_TYPE	R	0h	Message type
15-0	SEQUENCE_ID	R	0h	Sequence ID

Copyright © 2025 Texas Instruments Incorporated

11.2.1.6.373 EVENT_2_REG Register (Offset = 0003D03Ch) [Reset = X]

EVENT_2_REG is shown in Table 11-671.

Return to the Summary Table.

Event 2 Register

Table 11-671. EVENT_2_REG Register Field Descriptions

Bit	Field	Type	Reset	Description
31-8	RESERVED	R	X	
7-0	DOMAIN	R	0h	Domain

Copyright © 2025 Texas Instruments Incorporated

11.2.1.6.374 EVENT_3_REG Register (Offset = 0003D040h) [Reset = 00000000h]

EVENT_3_REG is shown in Table 11-672.

Return to the Summary Table.

Event 3 Register

Table 11-672. EVENT_3_REG Register Field Descriptions

Bit	Field	Type	Reset	Description
31-0	TIME_STAMP	R	0h	Time Stamp

Copyright © 2025 Texas Instruments Incorporated

11.2.1.6.375 TS_LOAD_HIGH_VAL_REG Register (Offset = 0003D044h) [Reset = 00000000h]

TS_LOAD_HIGH_VAL_REG is shown in Table 11-673.

Return to the Summary Table.

Time Stamp Load High Value Register

Table 11-673. TS_LOAD_HIGH_VAL_REG Register Field Descriptions

Bit	Field	Type	Reset	Description
31-0	TS_LOAD_VAL	R/W	0h	Time stamp load high value

Copyright © 2025 Texas Instruments Incorporated

11.2.1.6.376 TS_COMP_HIGH_VAL_REG Register (Offset = 0003D048h) [Reset = 00000000h]

TS_COMP_HIGH_VAL_REG is shown in Table 11-674.

Return to the Summary Table.

Time Stamp Comparison High Value Register

Table 11-674. TS_COMP_HIGH_VAL_REG Register Field Descriptions

Bit	Field	Type	Reset	Description
31-0	TS_COMP_HIGH_VAL	R/W	0h	Time stamp comparison high value

Copyright © 2025 Texas Instruments Incorporated

11.2.1.6.377 TS_ADD_VAL_REG Register (Offset = 0003D04Ch) [Reset = X]

TS_ADD_VAL_REG is shown in Table 11-675.

Return to the Summary Table.

TS Add Value Register

Table 11-675. TS_ADD_VAL_REG Register Field Descriptions

Bit	Field	Type	Reset	Description
31-3	RESERVED	R/W	X	
2-0	ADD_VAL	R/W	0h	Add Value

Copyright © 2025 Texas Instruments Incorporated

11.2.1.6.378 TS_PPM_LOW_VAL_REG Register (Offset = 0003D050h) [Reset = 00000000h]

TS_PPM_LOW_VAL_REG is shown in Table 11-676.

Return to the Summary Table.

Time Stamp PPM Low Value Register

Table 11-676. TS_PPM_LOW_VAL_REG Register Field Descriptions

Bit	Field	Type	Reset	Description
31-0	TS_PPM_LOW_VAL	R/W	0h	Time stamp PPM Low value

Copyright © 2025 Texas Instruments Incorporated

11.2.1.6.379 TS_PPM_HIGH_VAL_REG Register (Offset = 0003D054h) [Reset = X]

TS_PPM_HIGH_VAL_REG is shown in Table 11-677.

Return to the Summary Table.

Time Stamp PPM High Value Register

Table 11-677. TS_PPM_HIGH_VAL_REG Register Field Descriptions

Bit	Field	Type	Reset	Description
31-10	RESERVED	R/W	X	
9-0	TS_PPM_HIGH_VAL	R/W	0h	Time stamp PPM High value

Copyright © 2025 Texas Instruments Incorporated

11.2.1.6.380 TS_NUDGE_VAL_REG Register (Offset = 0003D058h) [Reset = X]

TS_NUDGE_VAL_REG is shown in Table 11-678.

Return to the Summary Table.

Time Stamp Nudge Value Register

Table 11-678. TS_NUDGE_VAL_REG Register Field Descriptions

Bit	Field	Type	Reset	Description
31-8	RESERVED	R/W	X	
7-0	TS_NUDGE_VAL	R/W	0h	Time stamp Nudge value

Copyright © 2025 Texas Instruments Incorporated

11.2.1.6.381 COMP_LOW_REG Register (Offset = 0003D0E0h) [Reset = 00000000h]

COMP_LOW_REG is shown in Table 11-679.

Return to the Summary Table.

Time Stamp Generate Function Comparison Low Value

Table 11-679. COMP_LOW_REG Register Field Descriptions

Bit	Field	Type	Reset	Description
31-0	COMP_LOW	R/W	0h	Time Stamp Generate Function Comparison Low Value

Copyright © 2025 Texas Instruments Incorporated

11.2.1.6.382 COMP_HIGH_REG Register (Offset = 0003D0E4h) [Reset = 00000000h]

COMP_HIGH_REG is shown in Table 11-680.

Return to the Summary Table.

Time Stamp Generate Function Comparison high Value

Table 11-680. COMP_HIGH_REG Register Field Descriptions

Bit	Field	Type	Reset	Description
31-0	COMP_HIGH	R/W	0h	Time Stamp Generate Function Comparison High Value

Copyright © 2025 Texas Instruments Incorporated

11.2.1.6.383 CONTROL_REG Register (Offset = 0003D0E8h) [Reset = X]

CONTROL_REG is shown in Table 11-317.

Return to the Summary Table.

Time Stamp Generate Function Control

Table 11-681. CONTROL_REG Register Field Descriptions

Bit	Field	Type	Reset	Description
31-2	RESERVED	R/W	X	
1	POLARITY_INV	R/W	0h	Time Stamp Generate Function Polarity Invert
0	PPM_DIR	R/W	0h	Time Stamp Generate Function PPM Direction

Copyright © 2025 Texas Instruments Incorporated

11.2.1.6.384 LENGTH_REG Register (Offset = 0003D0ECh) [Reset = 00000000h]

LENGTH_REG is shown in Table 11-682.

Return to the Summary Table.

Time Stamp Generate Function Length Value

Table 11-682. LENGTH_REG Register Field Descriptions

Bit	Field	Type	Reset	Description
31-0	LENGTH	R/W	0h	Time Stamp Generate Function Length Value

Copyright © 2025 Texas Instruments Incorporated

11.2.1.6.385 PPM_LOW_REG Register (Offset = 0003D0F0h) [Reset = 00000000h]

PPM_LOW_REG is shown in Table 11-683.

Return to the Summary Table.

Time Stamp Generate Function PPM Low Value

Table 11-683. PPM_LOW_REG Register Field Descriptions

Bit	Field	Type	Reset	Description
31-0	PPM_LOW	R/W	0h	Time Stamp Generate Function PPM Low Value

Copyright © 2025 Texas Instruments Incorporated

11.2.1.6.386 PPM_HIGH_REG Register (Offset = 0003D0F4h) [Reset = X]

PPM_HIGH_REG is shown in Table 11-684.

Return to the Summary Table.

Time Stamp Generate Function PPM High Value

Table 11-684. PPM_HIGH_REG Register Field Descriptions

Bit	Field	Type	Reset	Description
31-10	RESERVED	R/W	X	
9-0	PPM_HIGH	R/W	0h	Time Stamp Generate Function PPM High Value

Copyright © 2025 Texas Instruments Incorporated

11.2.1.6.387 NUDGE_REG Register (Offset = 0003D0F8h) [Reset = X]

NUDGE_REG is shown in Table 11-685.

Return to the Summary Table.

Time Stamp Generate Function Nudge Value

Table 11-685. NUDGE_REG Register Field Descriptions

Bit	Field	Type	Reset	Description
31-8	RESERVED	R/W	X	
7-0	NUDGE	R/W	0h	Time Stamp Generate Function Nudge Value

Copyright © 2025 Texas Instruments Incorporated

11.2.1.6.388 COMP_LOW_REG Register (Offset = 0003D200h) [Reset = 00000000h]

COMP_LOW_REG is shown in Table 11-679.

Return to the Summary Table.

Time Stamp ESTF Generate Function Comparison Low Value

Table 11-686. COMP_LOW_REG Register Field Descriptions

Bit	Field	Type	Reset	Description
31-0	COMP_LOW	R/W	0h	Time Stamp ESTF Generate Function Comparison Low Value

Copyright © 2025 Texas Instruments Incorporated

11.2.1.6.389 COMP_HIGH_REG Register (Offset = 0003D204h) [Reset = 00000000h]

COMP_HIGH_REG is shown in Table 11-680.

Return to the Summary Table.

Time Stamp ESTF Generate Function Comparison high Value

Table 11-687. COMP_HIGH_REG Register Field Descriptions

Bit	Field	Type	Reset	Description
31-0	COMP_HIGH	R/W	0h	Time Stamp ESTF Generate Function Comparison High Value

Copyright © 2025 Texas Instruments Incorporated

11.2.1.6.390 CONTROL_REG Register (Offset = 0003D208h) [Reset = X]

CONTROL_REG is shown in Table 11-317.

Return to the Summary Table.

Time Stamp ESTF Generate Function Control

Table 11-688. CONTROL_REG Register Field Descriptions

Bit	Field	Type	Reset	Description
31-2	RESERVED	R/W	X	
1	POLARITY_INV	R/W	0h	Time Stamp ESTF Generate Function Polarity Invert
0	PPM_DIR	R/W	0h	Time Stamp ESTF Generate Function PPM Direction

Copyright © 2025 Texas Instruments Incorporated

11.2.1.6.391 LENGTH_REG Register (Offset = 0003D20Ch) [Reset = 00000000h]

LENGTH_REG is shown in Table 11-682.

Return to the Summary Table.

Time Stamp ESTF Generate Function Length Value

Table 11-689. LENGTH_REG Register Field Descriptions

Bit	Field	Type	Reset	Description
31-0	LENGTH	R/W	0h	Time Stamp ESTF Generate Function Length Value

Copyright © 2025 Texas Instruments Incorporated

11.2.1.6.392 PPM_LOW_REG Register (Offset = 0003D210h) [Reset = 00000000h]

PPM_LOW_REG is shown in Table 11-683.

Return to the Summary Table.

Time Stamp ESTF Generate Function PPM Low Value

Table 11-690. PPM_LOW_REG Register Field Descriptions

Bit	Field	Type	Reset	Description
31-0	PPM_LOW	R/W	0h	Time Stamp ESTF Generate Function PPM Low Value

Copyright © 2025 Texas Instruments Incorporated

11.2.1.6.393 PPM_HIGH_REG Register (Offset = 0003D214h) [Reset = X]

PPM_HIGH_REG is shown in Table 11-684.

Return to the Summary Table.

Time Stamp ESTF Generate Function PPM High Value

Table 11-691. PPM_HIGH_REG Register Field Descriptions

Bit	Field	Type	Reset	Description
31-10	RESERVED	R/W	X	
9-0	PPM_HIGH	R/W	0h	Time Stamp ESTF Generate Function PPM High Value

Copyright © 2025 Texas Instruments Incorporated

11.2.1.6.394 NUDGE_REG Register (Offset = 0003D218h) [Reset = X]

NUDGE_REG is shown in Table 11-685.

Return to the Summary Table.

Time Stamp ESTF Generate Function Nudge Value

Table 11-692. NUDGE_REG Register Field Descriptions

Bit	Field	Type	Reset	Description
31-8	RESERVED	R/W	X	
7-0	NUDGE	R/W	0h	Time Stamp ESTF Generate Function Nudge Value

Copyright © 2025 Texas Instruments Incorporated

11.2.1.6.395 MOD_VER Register (Offset = 0003E000h) [Reset = 00294104h]

MOD_VER is shown in Table 11-693.

Return to the Summary Table.

The Module and Version Register identifies the module identifier and revision of the ALE_2g32 module.

Table 11-693. MOD_VER Register Field Descriptions

Bit	Field	Type	Reset	Description
31-16	MODULE_ID	R	29h	ALE_2g32 module ID.
15-11	RTL_VERSION	R	8h	RTL Version.
10-8	MAJOR_REVISION	R	1h	Major Revision.
7-6	CUSTOM_REVISION	R	0h	Custom Revision.
5-0	MINOR_REVISION	R	4h	Minor Revision.

Copyright © 2025 Texas Instruments Incorporated

11.2.1.6.396 ALE_STATUS Register (Offset = 0003E004h) [Reset = X]

ALE_STATUS is shown in Table 11-694.

Return to the Summary Table.

The ALE status provides information on the ALE configuration and state. The ~iramdepth is used to determine how IPv6 entries are stored in the table. IPv6 entries are stored in two entries where IPv6 Entry hi is designated by the odd slice index and lo is designated by the even slice index. The slice index is above the ram depth like {SlixeIndex,RamIndex}. So for a 64 deep RAM index of 0x005, the Hi portion of the IPv6 entry is located at 0x005|0x040 and the Lo portion is located at 0x005&(~0x040).

Table 11-694. ALE_STATUS Register Field Descriptions

Bit	Field	Type	Reset	Description
31	UREGANDREGMSK12	R	0h	When set, the unregistered multicast field is a mask versus an index on 12 bit boundary in the ALE table.
30	UREGANDREGMSK08	R	0h	When set, the unregistered multicast field is a mask versus an index on 8 bit boundary in the ALE table.
29-16	RESERVED	R	X	
15-8	POLCNTDIV8	R	0h	This is the number of policer engines the ALE implements divided by 8. A value of 4 indicates 32 policer engines total.
7	RAMDEPTH128	R	0h	The number of ALE entries per slice of the table when this is set it indicates the depth is 128 if both ramdepth128 and ramdepth32 are zero the depth is 64.
6	RAMDEPTH32	R	0h	The number of ALE entries per slice of the table when this is set it indicates the depth is 32 if both ramdepth128 and ramdepth32 are zero the depth is 64.
5	RESERVED	R	X	
4-0	KLUENTRIES	R	0h	This is the number of table entries total divided by 1024. A value of 1 indicates 1024 table entries. A value of 8 indicates 8192 table entries.

Copyright © 2025 Texas Instruments Incorporated

11.2.1.6.397 ALE_CONTROL Register (Offset = 0003E008h) [Reset = X]

ALE_CONTROL is shown in Table 11-695.

Return to the Summary Table.

The ALE Control Register is used to set the ALE modes used for all ports.

Table 11-695. ALE_CONTROL Register Field Descriptions

Bit	Field	Type	Reset	Description
31	ENABLE_ALE	R/W	0h	Enable ALE 0 - Drop all packets 1 - Enable ALE packet processing
30	CLEAR_TABLE	R/W	0h	Clear ALE address table - Setting this bit causes the ALE hardware to write all table bit values to zero. Software must perform a clear table operation as part of the ALE setup/configuration process. Setting this bit causes all ALE accesses to be held up for 64 clocks while the clear is performed. Access to all ALE registers will be blocked (wait states) until the 64 clocks have completed. This bit cannot be read as one because the read is blocked until the clear table is completed at which time this bit is cleared to zero.
29	AGE_OUT_NOW	R/W	0h	Age Out Address Table Now - Setting this bit causes the ALE hardware to remove (free up) any ageable table entry that does not have a set touch bit. This bit is cleared when the age out process has completed. This bit may be read. The age out process takes four times the number of table entries clock cycles (4096 cycles for 1K addresses) best case (no ale packet processing during ageout) and sixty five times the number of table entries clock cycles (66560 cycles for 1K addresses) absolute worst case.
28-25	RESERVED	R/W	X	
24	MIRROR_DP	R/W	0h	Mirror Destination Port - This field defines the port to which destination traffic destined will be duplicated. That is all traffic that is forwarded to this port will also be mirrored to the ~imirror_top port.
23-21	UPD_BW_CTRL	R/W	0h	The ~iupd_bw_ctrl field allows for up to 8 times the rate in which adds, updates, touches, writes, and aging updates can occur. At frequencies of 350Mhz, the table update rate should be at it lowest or 5 Million updates per second. When operating the switch core at frequencies or above, the ~iupd_bw_ctrl can be programmed more aggressive. If the ~iupd_bw_ctrl is set but the frequency of the switch subsystem is below the associated value, ALE will drop packets due to insufficient time to complete lookup under high traffic loads. 0 - 350Mhz, 5M 1 - 359Mhz, 11M 2 - 367Mhz, 16M 3 - 375Mhz, 22M 4 - 384Mhz, 28M 5 - 392Mhz, 34M 6 - 400Mhz, 39M 7 - 409Mhz, 45M
20-17	RESERVED	R/W	X	
16	MIRROR_TOP	R/W	0h	Mirror To Port - This field defines the destination port for the mirror traffic. If the traffic is received or transmitted on the mirror destination port it will not be duplicated. Traffic defined as mirror traffic only may be dropped by the switch due to congestion.
15	UPD_STATIC	R/W	0h	Update Static Entries - A static Entry is an entry that is not agable. When clear this bit will prevent any static entry (agable bit clear) from being updated due to port change. When set it allows static entries (agable bit clear) to update the source port if required. This bit should normally be '0' for most switch configurations.
14	RESERVED	R/W	X	
13	UVLAN_NO_LEARN	R/W	0h	Unknown VLAN No Learn - This field when set will prevent source addresses of unknown VLAN IDs from being automatically added into the look up table if learning is enabled.

Copyright © 2025 Texas Instruments Incorporated

Table 11-695. ALE_CONTROL Register Field Descriptions (continued)

Bit	Field	Type	Reset	Description
12	MIRROR_MEN	R/W	0h	Mirror Match Entry Enable - This field enables the match mirror option. When this bit is set any traffic whose destination, source, VLAN or OUI matches the ~imirror_midx entry index will have that traffic also sent to the ~imirror_top port.
11	MIRROR_DEN	R/W	0h	Mirror Destination Port Enable - This field enables the destination port mirror option. When this bit is set any traffic destined for the ~imirror_dp port will have its transmit traffic also sent to the ~imirror_top port.
10	MIRROR_SEN	R/W	0h	Mirror Source Port Enable - This field enables the source port mirror option. When this bit is set any port with the ~ipX_mirror_sp set in the ALE Port Control registers set will have its received traffic also sent to the ~imirror_top port.
9	RESERVED	R/W	X	
8	EN_HOST_UNI_FLOOD	R/W	0h	Unknown unicast packets flood to host 0 - unknown unicast packets are not sent to the host 1 - unknown unicast packets flood to host port as well as other ports
7	LEARN_NO_VLANID	R/W	0h	Learn No VID - 0 - VID is learned with the source address 1 - VID is not learned with the source address (source address is not tied to VID). Determines the entry type.
6	ENABLE_VID0_MODE	R/W	0h	Enable VLAN ID = 0 Mode 0 - Process the priority tagged packet with VID = PORT_VLAN[11:0]. 1 - Process the priority tagged packet with VID = 0.
5	ENABLE_OUI_DENY	R/W	0h	Enable OUI Deny Mode - When set, any packet with a non-matching OUI source address will be dropped to the host unless the packet destination address matches a supervisory destination address table entry. When cleared, any packet source address matching an OUI address table entry will be dropped to the host unless the destination address matches with a supervisory destination address table entry.
4	ENABLE_BYPASS	R/W	0h	ALE Bypass - When set, packets received on non-host ports are sent to the host. It is expected that packets from the host are directed to the particular port. 0 - no bypass 1 - bypass the ALE
3	BCAST_MCAST_CTL	R/W	0h	Rate Limit Transmit mode 0 - Broadcast and multicast rate limit counters are received port based 1 - Broadcast and multicast rate limit counters are transmit port based
2	ALE_VLAN_AWARE	R/W	0h	ALE VLAN Aware - Determines how traffic is forwarded using VLAN rules. 0 - Simple switch rules, packets forwarded to all ports for unknown destinations. 1 - VLAN Aware rules, packets forwarded based on VLAN members
1	ENABLE_AUTH_MODE	R/W	0h	Enable MAC Authorization Mode - Mac authorization mode requires that all table entries be made by the host software. There is no auto learning of addresses in authorization mode and the packet will be dropped if the source address is not found (and the destination address is not a multicast address with the super table entry bit set). 0 - The ALE is not in MAC authorization mode 1 - The ALE is in MAC authorization mode
0	ENABLE_RATE_LIMIT	R/W	0h	Enable Broadcast and Multicast Rate Limit 0 - Broadcast/Multicast rates not limited 1 - Broadcast/Multicast packet reception limited to the port control register rate limit fields.

Copyright © 2025 Texas Instruments Incorporated

11.2.1.6.398 ALE_CTRL2 Register (Offset = 0003E00Ch) [Reset = X]

ALE_CTRL2 is shown in Table 11-696.

Return to the Summary Table.

The ALE Control 2 Register is used to set the extended features used for all ports.

Table 11-696. ALE_CTRL2 Register Field Descriptions

Bit	Field	Type	Reset	Description
31	TRK_EN_DST	R/W	0h	Trunk Enable Destination Address - This field enables the destination MAC address to be used with the hash function G(X) = 1 + X + X^3 and affect the trunk port transmit link determination.
30	TRK_EN_SRC	R/W	0h	Trunk Enable Source Address - This field enables the source MAC address to be used with the hash function G(X) = 1 + X + X^3 and affect the trunk port transmit link determination.
29	TRK_EN_PRI	R/W	0h	Trunk Enable Priority - This field enables the VLAN Priority bits to be used with the hash function G(X) = 1 + X + X^3 and affect the trunk port transmit link determination. In the event that DSCP mapping is enabled and there is no VLAN the DSCP priority will be used. For all other non IP frames without VLAN the port default priority is used.
28	RESERVED	R/W	X	
27	TRK_EN_IVLAN	R/W	0h	Trunk Enable Inner VLAN - This field enables the inner VLAN ID value (C-VLANID) to be used with the hash function G(X) = 1 + X + X^3 and affect the trunk port transmit link determination.
26	RESERVED	R/W	X	
25	TRK_EN_SIP	R/W	0h	Trunk Enable Source IP Address - This field enables the source IP address to be used with the hash function G(X) = 1 + X + X^3 and affect the trunk port transmit link determination. This feature supports No tag, Priority tagged, VLAN tagged, Q-in-Q double tagging for both IPV6 and IPV4.
24	TRK_EN_DIP	R/W	0h	Trunk Enable Destination IP Address - This field enables the destination IP address to be used with the hash function G(X) = 1 + X + X^3 and affect the trunk port transmit link determination. This feature supports No tag, Priority tagged, VLAN tagged, Q-in-Q double tagging for both IPV6 and IPV4.
23	DROP_BADLEN	R/W	0h	Drop Bad Length will drop any packet that the 802.3 length field is larger than the packet. Ethertypes 0-1500 are 802.3 lengths, all others are Ether types.
22	NODROP_SRCMCST	R/W	0h	No Drop Source Multicast will disable the dropping of any source address with the multicast bit set.
21	DEFNOFRAG	R/W	0h	Default No Frag field will cause an IPv4 fragmented packet to be dropped if a VLAN entry is not found.
20	DEFLMTNXTHDR	R/W	0h	Default limit next header field will cause an IPv4 protocol or IPv6 next header packet to be dropped if a VLAN entry is not found and the protocol or next header does not match the ~iALE_NXT_HDR register values.
19	RESERVED	R/W	X	

Copyright © 2025 Texas Instruments Incorporated

Table 11-696. ALE_CTRL2 Register Field Descriptions (continued)

Bit	Field	Type	Reset	Description
18-16	TRK_BASE	R/W	0h	Trunk Base - This field is the hash formula starting value. Changing this value will cause the packet distribution on trunk ports to be changed. If all the ~itrk_en_dst, ~itrk_en_src, ~itrk_en_pri and ~itrk_en_vlan are '0', this value is used as the distribution index. That is a '0' will select the 1st bit of an 'N' link trunk, a '1' will select the second, etc. Below is the distribution across the trunk links. The first number in the ~iitalic sequence indicates the traffic is sent to the lowest numbered port of a trunk group. For example if you have a 3 port trunk, the hash result 0 will go to the base port (0), hash result 1 will go to the highest port of the trunk group (2), hash result 2 will go to the middle port (1), etc. 1 - ~i00000000 2 - ~i01010101 3 - ~i02102102 4 - ~i03210321
15-5	RESERVED	R/W	X	
4-0	MIRROR_MIDX	R/W	0h	Mirror Index - This field is the ALE lookup table entry index that when a match occurs will cause this traffic to be mirrored to the ~imirror_top port. That is any VLAN, ONU or address with or withou VLAN can be selected for traffic mirroring.

Copyright © 2025 Texas Instruments Incorporated

11.2.1.6.399 ALE_PRESCALE Register (Offset = 0003E010h) [Reset = X]

ALE_PRESCALE is shown in Table 11-697.

Return to the Summary Table.

The ALE Prescale Register is used to set the Broadcast and Multicast rate limiting prescaler value.

Table 11-697. ALE_PRESCALE Register Field Descriptions

Bit	Field	Type	Reset	Description
31-20	RESERVED	R/W	X	
19-0	ALE_PRESCALE	R/W	0h	ALE Prescale - The input clock is divided by this value for use in the multicast/broadcast rate limiters. The minimum operating value is 0x10. The prescaler is off when the value is zero.

Copyright © 2025 Texas Instruments Incorporated

11.2.1.6.400 ALE_AGING_CTRL Register (Offset = 0003E014h) [Reset = X]

ALE_AGING_CTRL is shown in Table 11-698.

Return to the Summary Table.

The ALE Aging Control sets the aging interval which will cause periodic aging to occur. This value specifies the minimum time between aging starts.

Table 11-698. ALE_AGING_CTRL Register Field Descriptions

Bit	Field	Type	Reset	Description
31	PRESCALE_2_DISABLE	R/W	0h	ALE Prescaler 2 Disable - When set will divide the aging interval by 1000. This bit is designed for device verification and should not be used in production software. Combination of PreScale1Disable and PreScale2Disable will divide the aging interval by 1,000,000 for test purposes.
30	PRESCALE_1_DISABLE	R/W	0h	ALE Prescaler 1 Disable - When set will divide the aging interval by 1000. This bit is designed for device verification and should not be used in production software. Combination of PreScale1Disable and PreScale2Disable will divide the aging interval by 1,000,000 for test purposes.
29-24	RESERVED	R/W	X	
23-0	ALE_AGING_TIMER	R/W	0h	ALE Aging Timer - This field specifies the number of clock cycles times 1,000,000 between aging operations.

Copyright © 2025 Texas Instruments Incorporated

11.2.1.6.401 ALE_NXT_HDR Register (Offset = 0003E01Ch) [Reset = 00000000h]

ALE_NXT_HDR is shown in Table 11-699.

Return to the Summary Table.

The ALE Next Header is used to limit the IPv6 Next header or IPv4 Protocol values found in the IP header. It is enabled via the ~iLmtNxtHdr bit in the VLAN entry. All four ~iip_nxt_hdr0-3 are compared when enabled, so if only one is required, set them all to the one value to be tested.

Table 11-699. ALE_NXT_HDR Register Field Descriptions

Bit	Field	Type	Reset	Description
31-24	IP_NXT_HDR3	R/W	0h	The ~iip_nxt_hdr3 is the forth protocol or next header compared when enabled.
23-16	IP_NXT_HDR2	R/W	0h	The ~iip_nxt_hdr2 is the third protocol or next header compared when enabled.
15-8	IP_NXT_HDR1	R/W	0h	The ~iip_nxt_hdr1 is the second protocol or next header compared when enabled.
7-0	IP_NXT_HDR0	R/W	0h	The ~iip_nxt_hdr0 is the first protocol or next header compared when enabled.

Copyright © 2025 Texas Instruments Incorporated

11.2.1.6.402 ALE_TBLCTL Register (Offset = 0003E020h) [Reset = X]

ALE_TBLCTL is shown in Table 11-700.

Return to the Summary Table.

The ALE table control register is used to read or write that ALE table entries. After writing to this register any read or write to any ALE register will be stalled until the read or write operation completes.

Table 11-700. ALE_TBLCTL Register Field Descriptions

Bit	Field	Type	Reset	Description
31	TABLEWR	R/W	0h	Table Write - This bit is used to write the table words to the lookup table. 0 - Table Read Operation is performed. The contents of the ~b TABLEIDX entry will be read into the ~b ALE_TBLWx registers 1 - Table write operation is performed. This will take the current contents from the ~b ALE_TBLWx registers and write them to the table at the specified ~b TABLEIDX.
30-5	RESERVED	R/W	X	
4-0	TABLEIDX	R/W	0h	The table index is used to determine which lookup table entry is read or written.

Copyright © 2025 Texas Instruments Incorporated

11.2.1.6.403 ALE_TBLW2 Register (Offset = 0003E034h) [Reset = X]

ALE_TBLW2 is shown in Table 11-701.

Return to the Summary Table.

The ALE Table Word 2 is the most significant word of an ALE table entry.

Table 11-701. ALE_TBLW2 Register Field Descriptions

Bit	Field	Type	Reset	Description
31-7	RESERVED	R/W	X	
6-0	TABLEWRD2	R/W	0h	Table Entry bits [71:64]

Copyright © 2025 Texas Instruments Incorporated

11.2.1.6.404 ALE_TBLW1 Register (Offset = 0003E038h) [Reset = 00000000h]

ALE_TBLW1 is shown in Table 11-702.

Return to the Summary Table.

The ALE Table Word 1 is the middle word of an ALE table entry.

Table 11-702. ALE_TBLW1 Register Field Descriptions

Bit	Field	Type	Reset	Description
31-0	TABLEWRD1	R/W	0h	Table Entry bits [63:32]

Copyright © 2025 Texas Instruments Incorporated

11.2.1.6.405 ALE_TBLW0 Register (Offset = 0003E03Ch) [Reset = 00000000h]

ALE_TBLW0 is shown in Table 11-703.

Return to the Summary Table.

The ALE Table Word 0 is the least significant word of an ALE table entry.

Table 11-703. ALE_TBLW0 Register Field Descriptions

Bit	Field	Type	Reset	Description
31-0	TABLEWRD0	R/W	0h	Table Entry bits [31:0]

Copyright © 2025 Texas Instruments Incorporated

11.2.1.6.406 I0_ALE_PORTCTL0_y Register (Offset = 0003E040h + formula) [Reset = X]

I0_ALE_PORTCTL0_y is shown in Table 11-704.

Return to the Summary Table.

The ALE Port Control Register sets the port specific modes of operation.

Offset = 0003E040h + (y * 4h); where y = 0h to 1h

Table 11-704. I0_ALE_PORTCTL0_y Register Field Descriptions

Bit	Field	Type	Reset	Description
31-24	I0_REG_P0_BCAST_LIMIT	R/W	0h	Broadcast Packet Rate Limit - Each prescale pulse loads this field into the port broadcast rate limit counter. The port counters are decremented with each packet received or transmitted depending on whether the mode is transmit or receive. If the counters decrement to zero, then further packets are rate limited until the next prescale pulse. Broadcast rate limiting is enabled by a non-zero value in this field.
23-16	I0_REG_P0_MCAST_LIMIT	R/W	0h	Multicast Packet Rate Limit - Each prescale pulse loads this field into the port multicast rate limit counter. The port counters are decremented with each packet received or transmitted depending on whether the mode is transmit or receive. If the counters decrement to zero, then further packets are rate limited until the next prescale pulse. Multicast rate limiting is enabled by a non-zero value in this field.The ~imcast_limit is the number of Multicast packets that will be forwaded per ~iale_prescale time.
15	I0_REG_P0_DROP_DOUBLE_VLAN	R/W	0h	Drop Double VLAN - When set cause any received packet with double VLANs to be dropped. That is if there are two ctag or two stag fields in the packet it will be dropped.
14	I0_REG_P0_DROP_DUAL_VLAN	R/W	0h	Drop Dual VLAN - When set will cause any received packet with dual VLAN stag followed by ctag to be dropped.
13	I0_REG_P0_MACONLY_CAF	R/W	0h	Mac Only Copy All Frames - When set a Mac Only port will transfer all received good frames to the host. When clear a Mac Only port will transfer packets to the host based on ALE destination address lookup operation (which operates more like an Ethernet Mac). A Mac Only port is a port with ~imaconly set.
12	I0_REG_P0_DIS_PAUTHMOD	R/W	0h	Disable Port authorization - When set will allow unknown addresses to arrive on a switch in authorization mode. It is intended for device to device network connection on ports which do not require MACSEC encryption.
11	I0_REG_P0_MACONLY	R/W	0h	MAC Only - When set enables this port be treated like a MAC port for the host. All traffic received is only sent to the host. The host must direct traffic to this port as the lookup engine will not send traffic to the ports with the ~ip0_maconly bit set and the ~ip0_no_learn also set. If ~ip0_maconly bit is set and the ~ip0_no_learn is not set, the host can send non-directed packets that can be sent to the destination of a MacOnly port. It is also possible that The host can broadcast to all ports including MacOnly ports in this mode.
10	I0_REG_P0_TRUNKEN	R/W	0h	Trunk Enable - This field is used to enable a port into a trunk. Any port can be used as a trunk port, any two or more ports with the ~ip0_trunken its set and having the same ~ip0_trunknum will be placed in the same trunk. There is no requirement for trunk ports to be adjacent. If all ports are enabled in the same trunk, no traffic can flow as traffic received within a trunk is never trasnmitted out the same trunk. If only a single port is a member of a trunk, it looks like a normal port with exception of entries in the look up table will be noted as a trunk entry.
9-8	I0_REG_P0_TRUNKNUM	R/W	0h	Trunk Number - This field is used as the trunk number when the ~ip0_trunken is also set. Ports with the same trunk number that have the ~ip0_trunken also set will have traffic distributed within the trunk based on the result of the hash function descrived above.

Copyright © 2025 Texas Instruments Incorporated

Table 11-704. I0_ALE_PORTCTL0_y Register Field Descriptions (continued)

Bit	Field	Type	Reset	Description
7	I0_REG_P0_MIRROR_SP	R/W	0h	Mirror Source Port - This field enables the source port mirror option. When this bit is set any traffic received on the port with the reg_p0_mirror_sp bit set will have its received traffic also sent to the ~imirror_top port.
6	RESERVED	R/W	X	
5	I0_REG_P0_NO_SA_UPDATE	R/W	0h	No Source Address Update - When set will not update the source addresses for this port.
4	I0_REG_P0_NO_LEARN	R/W	0h	No Learn - When set will not learn the source addresses for this port.
3	I0_REG_P0_VID_INGRESS_CHECK	R/W	0h	VLAN Ingress Check - When set if a packet received is not a member of the VLAN, the packet will be dropped.
2	I0_REG_P0_DROP_UN_TAGGED	R/W	0h	If Drop Untagged - When set will drop packets without a VLAN tag.
1-0	I0_REG_P0_PORTSTATE	R/W	0h	Port State - Defins the current port state used for lookup operations. 0 - Disabled 1 - Blocked 2 - Learning 3 - Forwarding

Copyright © 2025 Texas Instruments Incorporated

11.2.1.6.407 ALE_UVLAN_MEMBER Register (Offset = 0003E090h) [Reset = X]

ALE_UVLAN_MEMBER is shown in Table 11-705.

Return to the Summary Table.

The ALE Unknown VLAN Member Mask Register is used to specify the member list for unknown VLAN ID.

Table 11-705. ALE_UVLAN_MEMBER Register Field Descriptions

Bit	Field	Type	Reset	Description
31-2	RESERVED	R/W	X	
1-0	UVLAN_MEMBER_LIST	R/W	0h	Unknown VLAN Member List - Each bit represents the port member status for unknown VLANs.

Copyright © 2025 Texas Instruments Incorporated

11.2.1.6.408 ALE_UVLAN_URCAST Register (Offset = 0003E094h) [Reset = X]

ALE_UVLAN_URCAST is shown in Table 11-706.

Return to the Summary Table.

The ALE Unknown VLAN Unregistered Multicast Flood Mask Register is used to specify which egress ports unregistered multicast addresses egress for the unregistered VLAN ID.

Table 11-706. ALE_UVLAN_URCAST Register Field Descriptions

Bit	Field	Type	Reset	Description
31-2	RESERVED	R/W	X	
1-0	UVLAN_UNREG_MCAST_FLOOD_MASK	R/W	0h	Unknown VLAN Unregister Multicast Flood Mask - Each bit represents the port to which unregistered multicast are sent for unregistered VLANs.

Copyright © 2025 Texas Instruments Incorporated

11.2.1.6.409 ALE_UVLAN_RMCAST Register (Offset = 0003E098h) [Reset = X]

ALE_UVLAN_RMCAST is shown in Table 11-707.

Return to the Summary Table.

The ALE Unknown VLAN Registered Multicast Flood Mask Register is used to specify which egress ports registered multicast addresses egress for the unregistered VLAN ID.

Table 11-707. ALE_UVLAN_RMCAST Register Field Descriptions

Bit	Field	Type	Reset	Description
31-2	RESERVED	R/W	X	
1-0	UVLAN_REG_MCAST_FLOOD_MASK	R/W	0h	Unknown VLAN Register Multicast Flood Mask - Each bit represents the port to which registered multicast are sent for unregistered VLANs. This field is ANDed with the registered multicast mask to determine the destinations for unregistered VLANs.

Copyright © 2025 Texas Instruments Incorporated

11.2.1.6.410 ALE_UVLAN_UNTAG Register (Offset = 0003E09Ch) [Reset = X]

ALE_UVLAN_UNTAG is shown in Table 11-708.

Return to the Summary Table.

The ALE Unknown VLAN force Untagged Egress Mask Register is used to specify which egress ports the VLAN ID will be removed.

Table 11-708. ALE_UVLAN_UNTAG Register Field Descriptions

Bit	Field	Type	Reset	Description
31-2	RESERVED	R/W	X	
1-0	UVLAN_FORCE_UNTAGGED_EGRESS	R/W	0h	Unknown VLAN Force Untagged Egress Mask - Each bit represents the port where the VLAN will be removed for unregistered VLANs.

Copyright © 2025 Texas Instruments Incorporated

11.2.1.6.411 ALE_STAT_DIAG Register (Offset = 0003E0B8h) [Reset = X]

ALE_STAT_DIAG is shown in Table 11-709.

Return to the Summary Table.

The ALE Statistic Output Diagnostic Register allows the output statistics to diagnose the SW counters. This register is for diagnostice only.

Table 11-709. ALE_STAT_DIAG Register Field Descriptions

Bit	Field	Type	Reset	Description
31-16	RESERVED	R/W	X	
15	PBCAST_DIAG	R/W	0h	When set and the ~iport_diag is set to zero, will allow all ports to see the same stat diagnostic increment.
14-9	RESERVED	R/W	X	
8	PORT_DIAG	R/W	0h	The port selected that a received packet will cause the selected error to increment
7-4	RESERVED	R/W	X	
3-0	STAT_DIAG	R/W	0h	When non-zero will cause the selected statistic to increment on the next frame received. For the selected Port. 0: Disabled 1: Destination Equal Source Drop Stat will count 2: VLAN Ingress Check Drop Stat will count 3: Source Multicast Drop Stat will count 4: Dual VLAN Drop Stat will count 5: Ether Type length error Drop Stat will count 6: Next Hop Limit Drop Stat will count 7: IPv4 Fragment Drop Stat will count 8: Classifier Hit Stat will count 9: Classifier Red Drop Stat will count 10: Classifier Yellow Drop Stat will count 11: ALE Overflow Drop Stat will count 12: Rate Limit Drop Stat will count 13: Blocked Address Drop Stat will count 14: Secure Address Drop Stat will count 15: Authorization Drop Stat will count

Copyright © 2025 Texas Instruments Incorporated

11.2.1.6.412 ALE_OAM_LB_CTRL Register (Offset = 0003E0BCh) [Reset = X]

ALE_OAM_LB_CTRL is shown in Table 11-710.

Return to the Summary Table.

The ALE OAM Control allows ports to be put into OAM Loopback, only non-supervisor packet are looped back to the source port.

Table 11-710. ALE_OAM_LB_CTRL Register Field Descriptions

Bit	Field	Type	Reset	Description
31-2	RESERVED	R/W	X	
1-0	OAM_LB_CTRL	R/W	0h	The ~ioam_lb_ctrl allows any port to be put into OAM loopback, that is any packet received will be returned to the same port with an egressop of 0xFF which swaps the source and destination address. BPDUs will still flow through as normal so that OAM can be remotly requested and disabled.

Copyright © 2025 Texas Instruments Incorporated

11.2.1.6.413 ALE_MSK_MUX0 Register (Offset = 0003E0C0h) [Reset = X]

ALE_MSK_MUX0 is shown in Table 11-711.

Return to the Summary Table.

VLAN Mask Mux x - The ALE Mask Mux registers are used along with the VLAN registered/unregistered index selectors from the Lookup Table to determine the value for vlan registered and unregister mask respectively.

Table 11-711. ALE_MSK_MUX0 Register Field Descriptions

Bit	Field	Type	Reset	Description
31-2	RESERVED	R	X	
1-0	VLAN_MASK_MUX_0	R	3h	VLAN Mask Mux x - When selected by the VLAN lookup table entry FwdUnRegIdx or FwdAllRegIdx is used as the FwdUnRegMask or FwdUnRegMask values anded with the member list to determine the forwarding of packets. The Value of vlan_mask_mux_0 is read only and set to all ones for all ports.

Copyright © 2025 Texas Instruments Incorporated

11.2.1.6.414 I1_ALE_MSK_MUX1_y Register (Offset = 0003E0C4h + formula) [Reset = X]

I1_ALE_MSK_MUX1_y is shown in Table 11-712.

Return to the Summary Table.

VLAN Mask Mux x - The ALE Mask Mux registers are used along with the VLAN registered/unregistered index selectors from the Lookup Table to determine the value for vlan registered and unregister mask respectively.

Offset = 0003E0C4h + (y * 4h); where y = 0h to 2h

Table 11-712. I1_ALE_MSK_MUX1_y Register Field Descriptions

Bit	Field	Type	Reset	Description
31-2	RESERVED	R/W	X	
1-0	I1_REG_VLAN_MASK_MUX_1	R/W	0h	VLAN Mask Mux x - When selected by the VLAN lookup table entry FwdUnRegIdx or FwdAllRegIdx is used as the FwdUnRegMask or FwdUnRegMask values anded with the member list to determine the forwarding of packets. The Value of vlan_mask_mux_0 is read only and set to all ones for all ports.

Copyright © 2025 Texas Instruments Incorporated

11.2.1.6.415 EGRESSOP Register (Offset = 0003E0FCh) [Reset = X]

EGRESSOP is shown in Table 11-713.

Return to the Summary Table.

The Egress Operation register allows enabled classifiers with IPSA or IPDA match to use the CPSW Egress Packet Operations Inter VLAN Routing sub functions. If the packet was destined for the host, but matches a clasifier that has a programmed egress opcode, it will be forwarded to the destination ports where the destination ports will use the thier egress opcode entry to modify the packet. InterVLAN Routing and mirroring need to be understood, they are orthogonal functions.

Table 11-713. EGRESSOP Register Field Descriptions

Bit	Field	Type	Reset	Description
31-24	EGRESS_OP	R/W	0h	The Egress Operation defines the operation performed by the CPSW Egress Packet Operations 0: NOP : 1-n: Defines which egress Operation will be performed. This allows Inter VLAN routing to be configured for high bandwidth traffic, reducing CPU load. 0xff: Swap SA and DA of packet, this is intended to allow OAM diagnostics for a link.
23-21	EGRESS_TRK	R/W	0h	The Egress Trunk Index is the calculated trunk index from the SA, DA or VLAN if modified to that InterVLAN routing will work on trunks as well. The DA, SA and VLAN are ignored for trunk generation on InterVLAN Routing so that this field is the index generated from the Egress Op replacements elclusive or'd together into a three bit index.
20	TTL_CHECK	R/W	0h	The TTL Check will cause any packet that fails TTL checks to not be routed to the Inter VLAN Routing sub functions. The packet will be routed to the host it was destined to.
19-2	RESERVED	R/W	X	
1-0	DEST_PORTS	R/W	0h	The Destination Ports is a list of the ports the classified packet will be set to. If a destination is a Trunk, all the port bits for that trunck must be set.

Copyright © 2025 Texas Instruments Incorporated

11.2.1.6.416 POLICECFG0 Register (Offset = 0003E100h) [Reset = X]

POLICECFG0 is shown in Table 11-714.

Return to the Summary Table.

The Policing Config 0 holds the port, frame priority and ONU address index as well as match enables for port, frame priority and ONU address matching.

Table 11-714. POLICECFG0 Register Field Descriptions

Bit	Field	Type	Reset	Description
31	PORT_MEN	R/W	0h	Port Match Enable - Enabled port match for the selected policing/ classifier entry
30	TRUNKID	R/W	0h	Trunk ID - When set indicates the port number is a trunk group.
29-26	RESERVED	R/W	X	
25	PORT_NUM	R/W	0h	Port Number - Specifies the port address to match for the selected policing/classifier entry
24-20	RESERVED	R/W	X	
19	PRI_MEN	R/W	0h	Priority Match Enable - Enables frame priority match for the selected policing/classifier entry
18-16	PRI_VAL	R/W	0h	Priority Value - Specifies the frame priority to match for the selected policing/classifier entry
15	ONU_MEN	R/W	0h	OUI Match Enable - Enables frame ONU address match for the selected policing/classifier entry
14-5	RESERVED	R/W	X	
4-0	ONU_INDEX	R/W	0h	OUI Table Entry Index - Specifies the ALE ONU address lookup table index to match for the selected policing/classifier entry

Copyright © 2025 Texas Instruments Incorporated

11.2.1.6.417 POLICECFG1 Register (Offset = 0003E104h) [Reset = X]

POLICECFG1 is shown in Table 11-715.

Return to the Summary Table.

The Policing Config 1 holds the match enable/match index for the L2 Destination and L2 source addresses

Table 11-715. POLICECFG1 Register Field Descriptions

Bit	Field	Type	Reset	Description
31	DST_MEN	R/W	0h	Destination Address Match Enable - Enables frame L2 destination address match for the selected policing/classifier entry
30-21	RESERVED	R/W	X	
20-16	DST_INDEX	R/W	0h	Destination Address Table Entry Index - Specifies the ALE L2 destination address lookup table index to match for the selected policing/classifier entry
15	SRC_MEN	R/W	0h	Source Address Match Enable - Enables frame L2 source address match for the selected policing/classifier entry
14-5	RESERVED	R/W	X	
4-0	SRC_INDEX	R/W	0h	Source Address Table Entry Index - Specifies the ALE L2 source address lookup table index to match for the selected policing/ classifier entry

Copyright © 2025 Texas Instruments Incorporated

11.2.1.6.418 POLICECFG2 Register (Offset = 0003E108h) [Reset = X]

POLICECFG2 is shown in Table 11-716.

Return to the Summary Table.

The Policing Config 2 holds the match enable/match index for the Outer VLAN and Inner VLAN addresses

Table 11-716. POLICECFG2 Register Field Descriptions

Bit	Field	Type	Reset	Description
31	OVLAN_MEN	R/W	0h	Outer VLAN Match Enable - Enables frame Outer VLAN address match for the selected policing/classifier entry
30-21	RESERVED	R/W	X	
20-16	OVLAN_INDEX	R/W	0h	Outer VLAN Table Entry Index - Specifies the ALE Outer VLAN address lookup table index to match for the selected policing/ classifier entry
15	IVLAN_MEN	R/W	0h	Inner VLAN Match Enable - Enables frame Inner VLAN address match for the selected policing/classifier entry
14-5	RESERVED	R/W	X	
4-0	IVLAN_INDEX	R/W	0h	Inner VLAN Table Entry Index - Specifies the ALE Inner VLAN address lookup table index to match for the selected policing/ classifier entry

Copyright © 2025 Texas Instruments Incorporated

11.2.1.6.419 POLICECFG3 Register (Offset = 0003E10Ch) [Reset = X]

POLICECFG3 is shown in Table 11-717.

Return to the Summary Table.

The Policing Config 3 holds the match enable/match index for the Ether Type and IP Source address

Table 11-717. POLICECFG3 Register Field Descriptions

Bit	Field	Type	Reset	Description
31	ETHERTYPE_MEN	R/W	0h	EtherType Match Enable - Enables frame Ether Type match for the selected policing/classifier entry
30-21	RESERVED	R/W	X	
20-16	ETHERTYPE_INDEX	R/W	0h	EtherType Table Entry Index - Specifies the ALE Ether Type lookup table index to match for the selected policing/classifier entry
15	IPSRC_MEN	R/W	0h	IP Source Address Match Enable - Enables frame IP Source address match for the selected policing/classifier entry
14-5	RESERVED	R/W	X	
4-0	IPSRC_INDEX	R/W	0h	IP Source Address Table Entry Index - Specifies the ALE IP Source address lookup table index to match for the selected policing/classifier entry

Copyright © 2025 Texas Instruments Incorporated

11.2.1.6.420 POLICECFG4 Register (Offset = 0003E110h) [Reset = X]

POLICECFG4 is shown in Table 11-718.

Return to the Summary Table.

The Policing Config 4 holds the match enable/match index for the IP Destination address

Table 11-718. POLICECFG4 Register Field Descriptions

Bit	Field	Type	Reset	Description
31	IPDST_MEN	R/W	0h	IP Destination Address Match Enable - Enables frame IP Destination address match for the selected policing/classifier entry
30-21	RESERVED	R/W	X	
20-16	IPDST_INDEX	R/W	0h	IP Destination Address Table Entry Index - Specifies the ALE IP Destination address lookup table index to match for the selected policing/classifier entry
15-0	RESERVED	R/W	X	

Copyright © 2025 Texas Instruments Incorporated

11.2.1.6.421 POLICECFG6 Register (Offset = 0003E118h) [Reset = 00000000h]

POLICECFG6 is shown in Table 11-719.

Return to the Summary Table.

The PIR counter is a 37 bit internal counter where ~ipir_idle_inc_val is added every clock and the frame size << 18 is subtracted at EOF if not RED at LUT time. If the counter is negative the packet will be marked RED, else it can be YELLOW or GREEN based on the CIR counter. If only this counter is used (aka cir_idle_inc_val==0) Packet are marked RED or GREEN based on PIR counter only.

Table 11-719. POLICECFG6 Register Field Descriptions

Bit	Field	Type	Reset	Description
31-0	PIR_IDLE_INC_VAL	R/W	0h	Peak Information Rate Idle Increment Value - The number added to the PIR counter every clock cycle. If zero the PIR counter is disabled and packets will never be marked or processed as RED.

Copyright © 2025 Texas Instruments Incorporated

11.2.1.6.422 POLICECFG7 Register (Offset = 0003E11Ch) [Reset = 00000000h]

POLICECFG7 is shown in Table 11-720.

Return to the Summary Table.

The CIR counter is a 37 bit internal counter where ~icir_idle_inc_val is added every clock and the frame size << 18 is subtracted at EOF if not RED or YELLOW at LUT time. If the counter is positive the packet will be marked GREEN, else it can be YELLOW or RED based on the PIR counter. If only this counter is used (aka pir_idle_inc_val==0) Packet are marked YELLOW or GREEN based on CIR counter only.

Table 11-720. POLICECFG7 Register Field Descriptions

Bit	Field	Type	Reset	Description
31-0	CIR_IDLE_INC_VAL	R/W	0h	Committed Information Idle Increment Value - The number added to the CIR counter every clock cycle. If zero the CIR counter is disabled and packets will never be marked or processed as YELLOW.

Copyright © 2025 Texas Instruments Incorporated

11.2.1.6.423 POLICETBLCTL Register (Offset = 0003E120h) [Reset = X]

POLICETBLCTL is shown in Table 11-721.

Return to the Summary Table.

The Policing Table Control is used to read or write the selected policing/classifier entry. The selected policing/classifier entry is only read or written after this register is written based on the value of the ~iwrite_enable bit.

Table 11-721. POLICETBLCTL Register Field Descriptions

Bit	Field	Type	Reset	Description
31	WRITE_ENABLE	R/W	0h	Write Enable - Setting this bit will write the POLICECFG0-7 to the ~ipol_tbl_idx selected policing/classifier entry. Clearing this bit will read the ~ipol_tbl_idx selected policing/classifier entry into the POLICECFG0-7 registers.
30-2	RESERVED	R/W	X	
1-0	POL_TBL_IDX	R/W	0h	Policer Entry Index - This field specifies the policing/classifier entry to be read or written. When writing to this field without setting the ~iwrite_enable=1 will cause the selected policing/classifier entry to be loaded into the POLICECFG0-7 registers. When writing to this field with setting the ~iwrite_enable=1 will cause the selected policing/classifier entry to be updated from the POLICECFG0-7 registers.

Copyright © 2025 Texas Instruments Incorporated

11.2.1.6.424 POLICECONTROL Register (Offset = 0003E124h) [Reset = X]

POLICECONTROL is shown in Table 11-722.

Return to the Summary Table.

The Control Enables color marking as well as internal ALE packet dropping rules.

Table 11-722. POLICECONTROL Register Field Descriptions

Bit	Field	Type	Reset	Description
31	POLICING_EN	R/W	0h	Policing Enable - Enables the policing to color the packets, this also enables red or yellow drop capabilities.
30	RESERVED	R/W	X	
29	RED_DROP_EN	R/W	0h	RED Drop Enable - Enables the ALE to drop the red colored packets.
28	YELLOW_DROP_EN	R/W	0h	WELLOW Drop Enable - Enables the ALE to drop yellow packets based on the ~iyellowthresh value. This field would normally not be used as to let the switch drop packets at a buffer threshold instead. In the event that the switch does not enable buffer threshold dropping, YELLOW packets can be dropped based on this feature.
27	RESERVED	R/W	X	
26-24	YELLOWTHRESH	R/W	0h	Yellow Threshold - When set enables a portion of the yellow packets to be dropped based on the ~iyellow_drop_en enable. 0-100% 1=50% 2-33% 3-25% 4=20% 5-17% 6-14% 7-13%
23-22	POLMCHMODE	R/W	0h	Policing Match Mode - This field determines what happens to packets that fail to hit any policing/classifier entry. 0 - No Hit packets are marked GREEN 1 - No Hit packets are marked YELLOW 2 - No Hit packets are marked RED 3 - No Hit packets are marked based on policing/classifier entry=0 state.
21	PRIORITY_THREAD_EN	R/W	0h	Priority Thread Enable - This field determines if priority is OR'd to the default thread when no classifiers hit and the default thread is enabled.
20	MAC_ONLY_DEF_DIS	R/W	0h	MAC Only Default Disable - This field when set disables the default thread on MAC Only Ports. That is the default thread will be {port,priority}. If the traffic matches a classifier with a thread mapping, the classifier thread mapping still occurs.
19-0	RESERVED	R/W	X	

Copyright © 2025 Texas Instruments Incorporated

11.2.1.6.425 POLICETESTCTL Register (Offset = 0003E128h) [Reset = X]

POLICETESTCTL is shown in Table 11-723.

Return to the Summary Table.

The Policing Test Control enables the ability to determine which policing entry has been hit and whether they reported a red or yellow rate condition.

Table 11-723. POLICETESTCTL Register Field Descriptions

Bit	Field	Type	Reset	Description
31	POL_CLRALL_HIT	R/W	0h	Policer Clear - This bit clears all the policing/classifier hit bits. This bit is self clearing. This can be used to test the fact that a policing/classifier entry has been hit.
30	POL_CLRALL_REDHIT	R/W	0h	Policer Clear RED - This bit clears all the policing/classifier RED hit bits. This bit is self clearing. This can be used to test the fact that a policing/classifier entry has been hit during a RED condition.
29	POL_CLRALL_YELLOWHIT	R/W	0h	Policer Clear YELLOW - This bit clears all the policing/classifier YELLOW hit bits. This bit is self clearing. This can be used to test the fact that a policing/classifier entry has been hit during a YELLOW condition.
28	POL_CLRSEL_ALL	R/W	0h	Police Clear Selected - This bit clears the selected policing/classifier hit, redhit and yellowhit bits. This bit is self clearing.
27-2	RESERVED	R/W	X	
1-0	POL_TEST_IDX	R/W	0h	Policer Test Index - This field selects which policing/classifier hit bits will be read or written.

Copyright © 2025 Texas Instruments Incorporated

11.2.1.6.426 POLICEHSTAT Register (Offset = 0003E12Ch) [Reset = X]

POLICEHSTAT is shown in Table 11-724.

Return to the Summary Table.

The policing hit status is a read only register that reads the hit bits of the selected policing/classifier.

Table 11-724. POLICEHSTAT Register Field Descriptions

Bit	Field	Type	Reset	Description
31	POL_HIT	R	0h	Policer Hit - This indicates that the selected policing/classifier via the ~ipol_test_idx field has been hit by a packet seen on any port that matches the policing/classifier entry match.
30	POL_REDHIT	R	0h	Policer Hit RED - This indicates that the selected policing/classifier via the ~ipol_test_idx field has been hit during a RED condition by a packet seen on any port that matches the policing/classifier entry match.
29	POL_YELLOWHIT	R	0h	Policer Hit YELLOW - This indicates that the selected policing/classifier via the ~ipol_test_idx field has been hit during a YELLOW condition by a packet seen on any port that matches the policing/classifier entry match.
28-0	RESERVED	R	X	

Copyright © 2025 Texas Instruments Incorporated

11.2.1.6.427 THREADMAPDEF Register (Offset = 0003E134h) [Reset = X]

THREADMAPDEF is shown in Table 11-725.

Return to the Summary Table.

The THREAD Mapping Default Value register is used to set the default thread ID when no classifier is matched,

Table 11-725. THREADMAPDEF Register Field Descriptions

Bit	Field	Type	Reset	Description
31-16	RESERVED	R/W	X	
15	DEFTHREAD_EN	R/W	0h	Default Tread Enable - When set the switch will use the ~idefthreadval for the host interface thread ID if no classifier is matched. If clear the switch will generate its own thread ID based on port and priority if there is no classifier match.
14-6	RESERVED	R/W	X	
5-0	DEFTHREADVAL	R/W	0h	Default Thread Value - This field specifies the default thread ID value.

Copyright © 2025 Texas Instruments Incorporated

11.2.1.6.428 THREADMAPCTL Register (Offset = 0003E138h) [Reset = X]

THREADMAPCTL is shown in Table 11-726.

Return to the Summary Table.

The THREAD Mapping Control register allows the highest matched classifier to return a particular thread ID for traffic sent to the host. This allows particular classifier matched traffic to be placed an a particular hosts queue.

Table 11-726. THREADMAPCTL Register Field Descriptions

Bit	Field	Type	Reset	Description
31-2	RESERVED	R/W	X	
1-0	CLASSINDEX	R/W	0h	Classifier Index - This is the classifier index entry that the thread enable and thread value will be read or written by the ~bTHREADMAPVAL register.

Copyright © 2025 Texas Instruments Incorporated

11.2.1.6.429 THREADMAPVAL Register (Offset = 0003E13Ch) [Reset = X]

THREADMAPVAL is shown in Table 11-727.

Return to the Summary Table.

The THREAD Mapping Value register is used to set the thread ID for a particular classifier entry.

Table 11-727. THREADMAPVAL Register Field Descriptions

Bit	Field	Type	Reset	Description
31-16	RESERVED	R/W	X	
15	THREAD_EN	R/W	0h	Thread Enable - When set the switch will use the ~ithreadval for the selected classifier match. If clear the the thread ID will be determined by the ~bTHREADMAPDEF register settings.
14-6	RESERVED	R/W	X	
5-0	THREADVAL	R/W	0h	Thread Value - This field is the thread ID value that is used to map a classifier hit to thread ID for host traffic.

Copyright © 2025 Texas Instruments Incorporated

11.2.1.6.430 rev Register (Offset = 0003F000h) [Reset = 66A01A01h]

rev is shown in Table 11-728.

Return to the Summary Table.

Revision parameters

Table 11-728. rev Register Field Descriptions

Bit	Field	Type	Reset	Description
31-30	scheme	R	1h	Scheme
29-28	bu	R	2h	bu
27-16	module_id	R	6A0h	Module ID
15-11	revrtl	R	3h	RTL version
10-8	revmaj	R	2h	Major version
7-6	custom	R	0h	Custom version
5-0	revmin	R	1h	Minor version

Copyright © 2025 Texas Instruments Incorporated

11.2.1.6.431 vector Register (Offset = 0003F008h) [Reset = X]

vector is shown in Table 11-729.

Return to the Summary Table.

ECC Vector Register

Table 11-729. vector Register Field Descriptions

Bit	Field	Type	Reset	Description
31-25	RESERVED	R/W	X	
24	rd_svbus_done	R/W1C	0h	Status to indicate if read on serial VBUS is complete, write of any value will clear this bit.
23-16	rd_svbus_address	R/W	0h	Read address
15	rd_svbus	R/W1S	0h	Write 1 to trigger a read on the serial VBUS
14-11	RESERVED	R/W	X	
10-0	ecc_vector	R/W	0h	Value written to select the corresponding ECC RAM for control or status

Copyright © 2025 Texas Instruments Incorporated

11.2.1.6.432 stat Register (Offset = 0003F00Ch) [Reset = X]

stat is shown in Table 11-730.

Return to the Summary Table.

Misc Status

Table 11-730. stat Register Field Descriptions

Bit	Field	Type	Reset	Description
31-11	RESERVED	R	X	
10-0	num_rams	R	14h	Indicates the number of RAMS serviced by the ECC aggregator

Copyright © 2025 Texas Instruments Incorporated

11.2.1.6.433 reserved_svbus_y Register (Offset = 0003F010h + formula) [Reset = 00000000h]

reserved_svbus_y is shown in Table 11-731.

Return to the Summary Table.

Reference other documents that contain the ECC RAM wrapper and EDC controller serial vbus register sets.

Offset = 0003F010h + (y * 4h); where y = 0h to 7h

Table 11-731. reserved_svbus_y Register Field Descriptions

Bit	Field	Type	Reset	Description
31-0	data	R/W	0h	Serial VBUS register data

Copyright © 2025 Texas Instruments Incorporated

11.2.1.6.434 sec_eoi_reg Register (Offset = 0003F03Ch) [Reset = X]

sec_eoi_reg is shown in Table 11-732.

Return to the Summary Table.

EOI Register

Table 11-732. sec_eoi_reg Register Field Descriptions

Bit	Field	Type	Reset	Description
31-1	RESERVED	R/W	X	
0	eoi_wr	R/W1S	0h	EOI Register

Copyright © 2025 Texas Instruments Incorporated

11.2.1.6.435 sec_status_reg0 Register (Offset = 0003F040h) [Reset = X]

sec_status_reg0 is shown in Table 11-733.

Return to the Summary Table.

Interrupt Status Register 0

Table 11-733. sec_status_reg0 Register Field Descriptions

Bit	Field	Type	Reset	Description
31-20	RESERVED	R/W	X	
19	ramecc19_pend	R/W1S	0h	Interrupt Pending Status for ramecc19_pend
18	ramecc18_pend	R/W1S	0h	Interrupt Pending Status for ramecc18_pend
17	ramecc17_pend	R/W1S	0h	Interrupt Pending Status for ramecc17_pend
16	ramecc16_pend	R/W1S	0h	Interrupt Pending Status for ramecc16_pend
15	ramecc15_pend	R/W1S	0h	Interrupt Pending Status for ramecc15_pend
14	ramecc14_pend	R/W1S	0h	Interrupt Pending Status for ramecc14_pend
13	ramecc13_pend	R/W1S	0h	Interrupt Pending Status for ramecc13_pend
12	ramecc12_pend	R/W1S	0h	Interrupt Pending Status for ramecc12_pend
11	ramecc11_pend	R/W1S	0h	Interrupt Pending Status for ramecc11_pend
10	ramecc10_pend	R/W1S	0h	Interrupt Pending Status for ramecc10_pend
9	ramecc9_pend	R/W1S	0h	Interrupt Pending Status for ramecc9_pend
8	ramecc8_pend	R/W1S	0h	Interrupt Pending Status for ramecc8_pend
7	ramecc7_pend	R/W1S	0h	Interrupt Pending Status for ramecc7_pend
6	ramecc6_pend	R/W1S	0h	Interrupt Pending Status for ramecc6_pend
5	ramecc5_pend	R/W1S	0h	Interrupt Pending Status for ramecc5_pend
4	ramecc4_pend	R/W1S	0h	Interrupt Pending Status for ramecc4_pend
3	ramecc3_pend	R/W1S	0h	Interrupt Pending Status for ramecc3_pend
2	ramecc2_pend	R/W1S	0h	Interrupt Pending Status for ramecc2_pend
1	ramecc1_pend	R/W1S	0h	Interrupt Pending Status for ramecc1_pend
0	ramecc0_pend	R/W1S	0h	Interrupt Pending Status for ramecc0_pend

Copyright © 2025 Texas Instruments Incorporated

11.2.1.6.436 sec_enable_set_reg0 Register (Offset = 0003F080h) [Reset = X]

sec_enable_set_reg0 is shown in Table 11-734.

Return to the Summary Table.

Interrupt Enable Set Register 0

Table 11-734. sec_enable_set_reg0 Register Field Descriptions

Bit	Field	Type	Reset	Description
31-20	RESERVED	R/W	X	
19	ramecc19_enable_set	R/W1S	0h	Interrupt Enable Set Register for ramecc19_pend
18	ramecc18_enable_set	R/W1S	0h	Interrupt Enable Set Register for ramecc18_pend
17	ramecc17_enable_set	R/W1S	0h	Interrupt Enable Set Register for ramecc17_pend
16	ramecc16_enable_set	R/W1S	0h	Interrupt Enable Set Register for ramecc16_pend
15	ramecc15_enable_set	R/W1S	0h	Interrupt Enable Set Register for ramecc15_pend
14	ramecc14_enable_set	R/W1S	0h	Interrupt Enable Set Register for ramecc14_pend
13	ramecc13_enable_set	R/W1S	0h	Interrupt Enable Set Register for ramecc13_pend
12	ramecc12_enable_set	R/W1S	0h	Interrupt Enable Set Register for ramecc12_pend
11	ramecc11_enable_set	R/W1S	0h	Interrupt Enable Set Register for ramecc11_pend
10	ramecc10_enable_set	R/W1S	0h	Interrupt Enable Set Register for ramecc10_pend
9	ramecc9_enable_set	R/W1S	0h	Interrupt Enable Set Register for ramecc9_pend
8	ramecc8_enable_set	R/W1S	0h	Interrupt Enable Set Register for ramecc8_pend
7	ramecc7_enable_set	R/W1S	0h	Interrupt Enable Set Register for ramecc7_pend
6	ramecc6_enable_set	R/W1S	0h	Interrupt Enable Set Register for ramecc6_pend
5	ramecc5_enable_set	R/W1S	0h	Interrupt Enable Set Register for ramecc5_pend
4	ramecc4_enable_set	R/W1S	0h	Interrupt Enable Set Register for ramecc4_pend
3	ramecc3_enable_set	R/W1S	0h	Interrupt Enable Set Register for ramecc3_pend
2	ramecc2_enable_set	R/W1S	0h	Interrupt Enable Set Register for ramecc2_pend
1	ramecc1_enable_set	R/W1S	0h	Interrupt Enable Set Register for ramecc1_pend
0	ramecc0_enable_set	R/W1S	0h	Interrupt Enable Set Register for ramecc0_pend

Copyright © 2025 Texas Instruments Incorporated

11.2.1.6.437 sec_enable_clr_reg0 Register (Offset = 0003F0C0h) [Reset = X]

sec_enable_clr_reg0 is shown in Table 11-735.

Return to the Summary Table.

Interrupt Enable Clear Register 0

Table 11-735. sec_enable_clr_reg0 Register Field Descriptions

Bit	Field	Type	Reset	Description
31-20	RESERVED	R/W	X	
19	ramecc19_enable_clr	R/W1C	0h	Interrupt Enable Clear Register for ramecc19_pend
18	ramecc18_enable_clr	R/W1C	0h	Interrupt Enable Clear Register for ramecc18_pend
17	ramecc17_enable_clr	R/W1C	0h	Interrupt Enable Clear Register for ramecc17_pend
16	ramecc16_enable_clr	R/W1C	0h	Interrupt Enable Clear Register for ramecc16_pend
15	ramecc15_enable_clr	R/W1C	0h	Interrupt Enable Clear Register for ramecc15_pend
14	ramecc14_enable_clr	R/W1C	0h	Interrupt Enable Clear Register for ramecc14_pend
13	ramecc13_enable_clr	R/W1C	0h	Interrupt Enable Clear Register for ramecc13_pend
12	ramecc12_enable_clr	R/W1C	0h	Interrupt Enable Clear Register for ramecc12_pend
11	ramecc11_enable_clr	R/W1C	0h	Interrupt Enable Clear Register for ramecc11_pend
10	ramecc10_enable_clr	R/W1C	0h	Interrupt Enable Clear Register for ramecc10_pend
9	ramecc9_enable_clr	R/W1C	0h	Interrupt Enable Clear Register for ramecc9_pend
8	ramecc8_enable_clr	R/W1C	0h	Interrupt Enable Clear Register for ramecc8_pend
7	ramecc7_enable_clr	R/W1C	0h	Interrupt Enable Clear Register for ramecc7_pend
6	ramecc6_enable_clr	R/W1C	0h	Interrupt Enable Clear Register for ramecc6_pend
5	ramecc5_enable_clr	R/W1C	0h	Interrupt Enable Clear Register for ramecc5_pend
4	ramecc4_enable_clr	R/W1C	0h	Interrupt Enable Clear Register for ramecc4_pend
3	ramecc3_enable_clr	R/W1C	0h	Interrupt Enable Clear Register for ramecc3_pend
2	ramecc2_enable_clr	R/W1C	0h	Interrupt Enable Clear Register for ramecc2_pend
1	ramecc1_enable_clr	R/W1C	0h	Interrupt Enable Clear Register for ramecc1_pend
0	ramecc0_enable_clr	R/W1C	0h	Interrupt Enable Clear Register for ramecc0_pend

Copyright © 2025 Texas Instruments Incorporated

11.2.1.6.438 ded_eoi_reg Register (Offset = 0003F13Ch) [Reset = X]

ded_eoi_reg is shown in Table 11-736.

Return to the Summary Table.

EOI Register

Table 11-736. ded_eoi_reg Register Field Descriptions

Bit	Field	Type	Reset	Description
31-1	RESERVED	R/W	X	
0	eoi_wr	R/W1S	0h	EOI Register

Copyright © 2025 Texas Instruments Incorporated

11.2.1.6.439 ded_status_reg0 Register (Offset = 0003F140h) [Reset = X]

ded_status_reg0 is shown in Table 11-737.

Return to the Summary Table.

Interrupt Status Register 0

Table 11-737. ded_status_reg0 Register Field Descriptions

Bit	Field	Type	Reset	Description
31-20	RESERVED	R/W	X	
19	ramecc19_pend	R/W1S	0h	Interrupt Pending Status for ramecc19_pend
18	ramecc18_pend	R/W1S	0h	Interrupt Pending Status for ramecc18_pend
17	ramecc17_pend	R/W1S	0h	Interrupt Pending Status for ramecc17_pend
16	ramecc16_pend	R/W1S	0h	Interrupt Pending Status for ramecc16_pend
15	ramecc15_pend	R/W1S	0h	Interrupt Pending Status for ramecc15_pend
14	ramecc14_pend	R/W1S	0h	Interrupt Pending Status for ramecc14_pend
13	ramecc13_pend	R/W1S	0h	Interrupt Pending Status for ramecc13_pend
12	ramecc12_pend	R/W1S	0h	Interrupt Pending Status for ramecc12_pend
11	ramecc11_pend	R/W1S	0h	Interrupt Pending Status for ramecc11_pend
10	ramecc10_pend	R/W1S	0h	Interrupt Pending Status for ramecc10_pend
9	ramecc9_pend	R/W1S	0h	Interrupt Pending Status for ramecc9_pend
8	ramecc8_pend	R/W1S	0h	Interrupt Pending Status for ramecc8_pend
7	ramecc7_pend	R/W1S	0h	Interrupt Pending Status for ramecc7_pend
6	ramecc6_pend	R/W1S	0h	Interrupt Pending Status for ramecc6_pend
5	ramecc5_pend	R/W1S	0h	Interrupt Pending Status for ramecc5_pend
4	ramecc4_pend	R/W1S	0h	Interrupt Pending Status for ramecc4_pend
3	ramecc3_pend	R/W1S	0h	Interrupt Pending Status for ramecc3_pend
2	ramecc2_pend	R/W1S	0h	Interrupt Pending Status for ramecc2_pend
1	ramecc1_pend	R/W1S	0h	Interrupt Pending Status for ramecc1_pend
0	ramecc0_pend	R/W1S	0h	Interrupt Pending Status for ramecc0_pend

Copyright © 2025 Texas Instruments Incorporated

11.2.1.6.440 ded_enable_set_reg0 Register (Offset = 0003F180h) [Reset = X]

ded_enable_set_reg0 is shown in Table 11-738.

Return to the Summary Table.

Interrupt Enable Set Register 0

Table 11-738. ded_enable_set_reg0 Register Field Descriptions

Bit	Field	Type	Reset	Description
31-20	RESERVED	R/W	X	
19	ramecc19_enable_set	R/W1S	0h	Interrupt Enable Set Register for ramecc19_pend
18	ramecc18_enable_set	R/W1S	0h	Interrupt Enable Set Register for ramecc18_pend
17	ramecc17_enable_set	R/W1S	0h	Interrupt Enable Set Register for ramecc17_pend
16	ramecc16_enable_set	R/W1S	0h	Interrupt Enable Set Register for ramecc16_pend
15	ramecc15_enable_set	R/W1S	0h	Interrupt Enable Set Register for ramecc15_pend
14	ramecc14_enable_set	R/W1S	0h	Interrupt Enable Set Register for ramecc14_pend
13	ramecc13_enable_set	R/W1S	0h	Interrupt Enable Set Register for ramecc13_pend
12	ramecc12_enable_set	R/W1S	0h	Interrupt Enable Set Register for ramecc12_pend
11	ramecc11_enable_set	R/W1S	0h	Interrupt Enable Set Register for ramecc11_pend
10	ramecc10_enable_set	R/W1S	0h	Interrupt Enable Set Register for ramecc10_pend
9	ramecc9_enable_set	R/W1S	0h	Interrupt Enable Set Register for ramecc9_pend
8	ramecc8_enable_set	R/W1S	0h	Interrupt Enable Set Register for ramecc8_pend
7	ramecc7_enable_set	R/W1S	0h	Interrupt Enable Set Register for ramecc7_pend
6	ramecc6_enable_set	R/W1S	0h	Interrupt Enable Set Register for ramecc6_pend
5	ramecc5_enable_set	R/W1S	0h	Interrupt Enable Set Register for ramecc5_pend
4	ramecc4_enable_set	R/W1S	0h	Interrupt Enable Set Register for ramecc4_pend
3	ramecc3_enable_set	R/W1S	0h	Interrupt Enable Set Register for ramecc3_pend
2	ramecc2_enable_set	R/W1S	0h	Interrupt Enable Set Register for ramecc2_pend
1	ramecc1_enable_set	R/W1S	0h	Interrupt Enable Set Register for ramecc1_pend
0	ramecc0_enable_set	R/W1S	0h	Interrupt Enable Set Register for ramecc0_pend

Copyright © 2025 Texas Instruments Incorporated

11.2.1.6.441 ded_enable_clr_reg0 Register (Offset = 0003F1C0h) [Reset = X]

ded_enable_clr_reg0 is shown in Table 11-739.

Return to the Summary Table.

Interrupt Enable Clear Register 0

Table 11-739. ded_enable_clr_reg0 Register Field Descriptions

Bit	Field	Type	Reset	Description
31-20	RESERVED	R/W	X	
19	ramecc19_enable_clr	R/W1C	0h	Interrupt Enable Clear Register for ramecc19_pend
18	ramecc18_enable_clr	R/W1C	0h	Interrupt Enable Clear Register for ramecc18_pend
17	ramecc17_enable_clr	R/W1C	0h	Interrupt Enable Clear Register for ramecc17_pend
16	ramecc16_enable_clr	R/W1C	0h	Interrupt Enable Clear Register for ramecc16_pend
15	ramecc15_enable_clr	R/W1C	0h	Interrupt Enable Clear Register for ramecc15_pend
14	ramecc14_enable_clr	R/W1C	0h	Interrupt Enable Clear Register for ramecc14_pend
13	ramecc13_enable_clr	R/W1C	0h	Interrupt Enable Clear Register for ramecc13_pend
12	ramecc12_enable_clr	R/W1C	0h	Interrupt Enable Clear Register for ramecc12_pend
11	ramecc11_enable_clr	R/W1C	0h	Interrupt Enable Clear Register for ramecc11_pend
10	ramecc10_enable_clr	R/W1C	0h	Interrupt Enable Clear Register for ramecc10_pend
9	ramecc9_enable_clr	R/W1C	0h	Interrupt Enable Clear Register for ramecc9_pend
8	ramecc8_enable_clr	R/W1C	0h	Interrupt Enable Clear Register for ramecc8_pend
7	ramecc7_enable_clr	R/W1C	0h	Interrupt Enable Clear Register for ramecc7_pend
6	ramecc6_enable_clr	R/W1C	0h	Interrupt Enable Clear Register for ramecc6_pend
5	ramecc5_enable_clr	R/W1C	0h	Interrupt Enable Clear Register for ramecc5_pend
4	ramecc4_enable_clr	R/W1C	0h	Interrupt Enable Clear Register for ramecc4_pend
3	ramecc3_enable_clr	R/W1C	0h	Interrupt Enable Clear Register for ramecc3_pend
2	ramecc2_enable_clr	R/W1C	0h	Interrupt Enable Clear Register for ramecc2_pend
1	ramecc1_enable_clr	R/W1C	0h	Interrupt Enable Clear Register for ramecc1_pend
0	ramecc0_enable_clr	R/W1C	0h	Interrupt Enable Clear Register for ramecc0_pend

Copyright © 2025 Texas Instruments Incorporated

11.2.1.6.442 aggr_enable_set Register (Offset = 0003F200h) [Reset = X]

aggr_enable_set is shown in Table 11-740.

Return to the Summary Table.

AGGR interrupt enable set Register

Table 11-740. aggr_enable_set Register Field Descriptions

Bit	Field	Type	Reset	Description
31-2	RESERVED	R/W	X	
1	timeout	R/W1S	0h	interrupt enable set for svbus timeout errors
0	parity	R/W1S	0h	interrupt enable set for parity errors

Copyright © 2025 Texas Instruments Incorporated

11.2.1.6.443 aggr_enable_clr Register (Offset = 0003F204h) [Reset = X]

aggr_enable_clr is shown in Table 11-741.

Return to the Summary Table.

AGGR interrupt enable clear Register

Table 11-741. aggr_enable_clr Register Field Descriptions

Bit	Field	Type	Reset	Description
31-2	RESERVED	R/W	X	
1	timeout	R/W1C	0h	interrupt enable clear for svbus timeout errors
0	parity	R/W1C	0h	interrupt enable clear for parity errors

Copyright © 2025 Texas Instruments Incorporated

11.2.1.6.444 aggr_status_set Register (Offset = 0003F208h) [Reset = X]

aggr_status_set is shown in Table 11-742.

Return to the Summary Table.

AGGR interrupt status set Register

Table 11-742. aggr_status_set Register Field Descriptions

Bit	Field	Type	Reset	Description
31-4	RESERVED	R/W	X	
3-2	timeout	R/Wincr	0h	interrupt status set for svbus timeout errors
1-0	parity	R/Wincr	0h	interrupt status set for parity errors

Copyright © 2025 Texas Instruments Incorporated

11.2.1.6.445 aggr_status_clr Register (Offset = 0003F20Ch) [Reset = X]

aggr_status_clr is shown in Table 11-743.

Return to the Summary Table.

AGGR interrupt status clear Register

Table 11-743. aggr_status_clr Register Field Descriptions

Bit	Field	Type	Reset	Description
31-4	RESERVED	R/W	X	
3-2	timeout	R/Wdecr	0h	interrupt status clear for svbus timeout errors
1-0	parity	R/Wdecr	0h	interrupt status clear for parity errors

11.2.2 LVDS

11.2.2.1 LVDS Overview 3004
11.2.2.2 LVDS Programming Sequence 3004
11.2.2.3 CBUFF and LVDS Registers 3005

Copyright © 2025 Texas Instruments Incorporated

11.2.2.1 LVDS Overview

The LVDS interface includes the following signals:

- LVDS bit clock
- LVDS data lanes (the HSI integration chapter specific to the device lists the number of available lanes specific to the device)
- LVDS frame clock
- LVDS data_valid signal

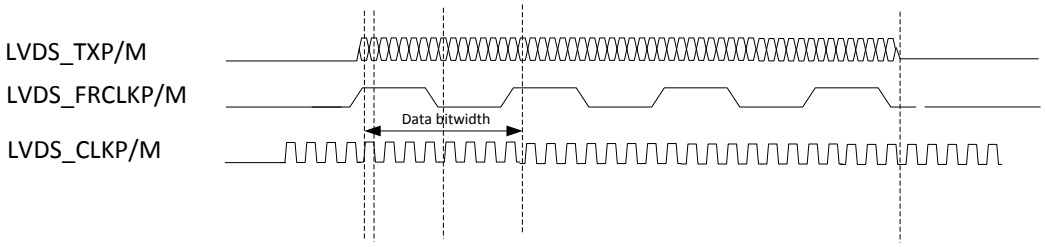

Figure 11-153. LVDS Interface Timings

The LVDS interface supports the following data rates(only DDR mode is supported):

- 900 Mbps (450-MHz DDR Clock)
- 600 Mbps (300-MHz DDR Clock)
- 450 Mbps (225-MHz DDR Clock)
- 400 Mbps (200-MHz DDR Clock)
- 300 Mbps (150-MHz DDR Clock)
- 225 Mbps (112.5-MHz DDR Clock)
- 150 Mbps (75-MHz DDR Clock)

Refer to the device data sheet for more details.

11.2.2.2 LVDS Programming Sequence

The following sections show the programming sequence needed before the hardware triggers are generated to initiate the high-speed LVDS data transmission.

11.2.2.2.1 LVDS Global Initialization

Table 11-744. Main Sequence – TOP_CTRL and Global Configuration

Steps	Register/Bit Field/Programming	Value
Power on the LVDS I/Os	MSS_TOP_CTRL. LVDS_PAD_CTRL0 MSS_TOP_CTRL. LVDS_PAD_CTRL1	0x0 0x0
Power off the LVDS I/Os	MSS_TOP_CTRL. LVDS_PAD_CTRL0 MSS_TOP_CTRL. LVDS_PAD_CTRL1	0x39393939 0x01003939
Power on the LVDS I/Os	MSS_TOP_CTRL. LVDS_PAD_CTRL0 MSS_TOP_CTRL. LVDS_PAD_CTRL1	0x0 0x0

11.2.2.2.2 CBUFF Configuration

Table 11-745. Main Sequence – CBUFF LVDS Static Configuration

Steps	Register/Bit Field/Programming	Value
Assert the CBUFF soft reset	CONFIG_REG_0.CSWCRST	0x1
Configure CBUFF for LVDS data transfer	CONFIG_REG_0.CFG_1LVDS_0CSI	0x1

Copyright © 2025 Texas Instruments Incorporated

Table 11-745. Main Sequence – CBUFF LVDS Static Configuration (continued)

Steps	Register/Bit Field/Programming	Value
Configure static values for LVDS	CONFIG_REG_0.CVC0EN	
	CFG_SPHDR_ADDRESS	0x55555555
	CFG_CMD_VSVAL	0x55555555
	CFG_CMD_VEVAL	0xAAAAAAAA
	CFG_LPHDR_ADDRESS	0xAAAAAAAA
	CFG_LVDS_GEN_0.CCSMEN	0x1
Configure the number of chirps in a frame	CFG_CHIRPS_PER_FRAME	X
Configure static values for LVDS based on LVDS CRC enabled or disabled	CFG_LVDS_GEN_0.CBCRCEN CFG_CMD_HEVAL CFG_CMD_HSVAL	X
Enable the LVDS lanes	CFG_LVDS_GEN_0.CFG_LVDS_LANE[X]_EN	0x1
Configure the alignment for start of samples	CFG_LVDS_GEN_0.CPOSSEL	0x-
Configure the LVDS FIFO initial threshold	CFG_LVDS_GEN_0.CFDLY	0x8
Set the 3C3L mode if the system configuration is interleaved 3 channel – 3 lane	CFG_LVDS_GEN_1.C3C3L	0x-
Configure the lane-mapping format registers	CFG_LVDS_MAPPING_LANE[X]_FMT_0 CFG_LVDS_MAPPING_LANE[X]_FMT_1	X
Release the CBUFF from soft reset	CONFIG_REG_0.CSWCRST	0x0

The configuration in Table 11-746 should be performed for each linklist entry required to transmit the LVDS packet.

Table 11-746. Main Sequence – CBUFF Linklist

Steps	Register/Bit Field/Programming	Value
Set the valid for the linklist	CFG_DATA_LL[X].LL[X]_VALID	0x1
If the linklist is the start of a new LVDS packet	CFG_DATA_LL[X].LL[X]_LPHDR_EN CFG_DATA_LL[X].LL[X]_HS	0x-
Configure the long packet header to static value for LVDS	CFG_DATA_LL[X]_LPHDR_VAL	0xBBBBBBBB
If the linklist is the end of a LVDS packet	CFG_DATA_LL[X].LL[X]_HE	0x-
Configure the size in CBUFF units	CFG_DATA_LL[X].LL[X]_SIZE	X
Configure the format of the CSI2 packet to which the linklist belongs	CFG_DATA_LL[X].LL[X]_FMT	X
Select the LVDS format-mapping register for the LVDS packet	CFG_DATA_LL[X].LL[X]_FMT_MAP	0x-
Set the input format	CFG_DATA_LL[X].LL[X]_FMT_IN	X
Set the Linklist write threshold	CFG_DATA_LL[X]_THRESHOLD.LL[X]_WR_THRESHOLD	X
Set the Linklist read threshold	CFG_DATA_LL[X]_THRESHOLD.LL[X]_WR_THRESHOLD	X

11.2.2.3 CBUFF and LVDS Registers

Copyright © 2025 Texas Instruments Incorporated

11.2.2.3.1 DSS_CBUFF Registers

Table 11-747 lists the memory-mapped registers for the DSS_CBUFF registers. All register offset addresses not listed in Table 11-747 should be considered as reserved locations and the register contents should not be modified.

Table 11-747. DSS_CBUFF Registers

Offset	Acronym	Register Name	Section
0h	CONFIG_REG_0	CONFIG_REG_0	Go
4h	CFG_SPHDR_ADDRESS	CFG_SPHDR_ADDRESS	Go
8h	CFG_CMD_HSVAL	CFG_CMD_HSVAL	Go
Ch	CFG_CMD_HEVAL	CFG_CMD_HEVAL	Go
10h	CFG_CMD_VSVAL	CFG_CMD_VSVAL	Go
14h	CFG_CMD_VEVAL	CFG_CMD_VEVAL	Go
18h	CFG_LPHDR_ADDRESS	CFG_LPHDR_ADDRESS	Go
20h	CFG_CHIRPS_PER_FRAME	CFG_CHIRPS_PER_FRAME	Go
24h	CFG_FIFO_FREE_THRESHOLD	CFG_FIFO_FREE_THRESHOLD	Go
28h	CFG_LPPYLD_ADDRESS	CFG_LPPYLD_ADDRESS	Go
2Ch	CFG_DELAY_CONFIG	CFG_DELAY_CONFIG	Go
30h	CFG_DATA_LL0	CFG_DATA_LL0	Go
34h	CFG_DATA_LL0_LPHDR_VAL	CFG_DATA_LL0_LPHDR_VAL	Go
38h	CFG_DATA_LL0_THRESHOLD	CFG_DATA_LL0_THRESHOLD	Go
3Ch	CFG_DATA_LL1	CFG_DATA_LL1	Go
40h	CFG_DATA_LL1_LPHDR_VAL	CFG_DATA_LL1_LPHDR_VAL	Go
44h	CFG_DATA_LL1_THRESHOLD	CFG_DATA_LL1_THRESHOLD	Go
48h	CFG_DATA_LL2	CFG_DATA_LL2	Go
4Ch	CFG_DATA_LL2_LPHDR_VAL	CFG_DATA_LL2_LPHDR_VAL	Go
50h	CFG_DATA_LL2_THRESHOLD	CFG_DATA_LL2_THRESHOLD	Go
54h	CFG_DATA_LL3	CFG_DATA_LL3	Go
58h	CFG_DATA_LL3_LPHDR_VAL	CFG_DATA_LL3_LPHDR_VAL	Go
5Ch	CFG_DATA_LL3_THRESHOLD	CFG_DATA_LL3_THRESHOLD	Go
60h	CFG_DATA_LL4	CFG_DATA_LL4	Go
64h	CFG_DATA_LL4_LPHDR_VAL	CFG_DATA_LL4_LPHDR_VAL	Go
68h	CFG_DATA_LL4_THRESHOLD	CFG_DATA_LL4_THRESHOLD	Go
6Ch	CFG_DATA_LL5	CFG_DATA_LL5	Go
70h	CFG_DATA_LL5_LPHDR_VAL	CFG_DATA_LL5_LPHDR_VAL	Go
74h	CFG_DATA_LL5_THRESHOLD	CFG_DATA_LL5_THRESHOLD	Go
78h	CFG_DATA_LL6	CFG_DATA_LL6	Go
7Ch	CFG_DATA_LL6_LPHDR_VAL	CFG_DATA_LL6_LPHDR_VAL	Go
80h	CFG_DATA_LL6_THRESHOLD	CFG_DATA_LL6_THRESHOLD	Go
84h	CFG_DATA_LL7	CFG_DATA_LL7	Go
88h	CFG_DATA_LL7_LPHDR_VAL	CFG_DATA_LL7_LPHDR_VAL	Go
8Ch	CFG_DATA_LL7_THRESHOLD	CFG_DATA_LL7_THRESHOLD	Go
90h	CFG_DATA_LL8	CFG_DATA_LL8	Go
94h	CFG_DATA_LL8_LPHDR_VAL	CFG_DATA_LL8_LPHDR_VAL	Go
98h	CFG_DATA_LL8_THRESHOLD	CFG_DATA_LL8_THRESHOLD	Go
9Ch	CFG_DATA_LL9	CFG_DATA_LL9	Go
A0h	CFG_DATA_LL9_LPHDR_VAL	CFG_DATA_LL9_LPHDR_VAL	Go
A4h	CFG_DATA_LL9_THRESHOLD	CFG_DATA_LL9_THRESHOLD	Go

Copyright © 2025 Texas Instruments Incorporated

Table 11-747. DSS_CBUFF Registers (continued)

Offset	Acronym	Register Name	Section
A8h	CFG_DATA_LL10	CFG_DATA_LL10	Go
ACh	CFG_DATA_LL10_LPHDR_VAL	CFG_DATA_LL10_LPHDR_VAL	Go
B0h	CFG_DATA_LL10_THRESHOLD	CFG_DATA_LL10_THRESHOLD	Go
B4h	CFG_DATA_LL11	CFG_DATA_LL11	Go
B8h	CFG_DATA_LL11_LPHDR_VAL	CFG_DATA_LL11_LPHDR_VAL	Go
BCh	CFG_DATA_LL11_THRESHOLD	CFG_DATA_LL11_THRESHOLD	Go
C0h	CFG_DATA_LL12	CFG_DATA_LL12	Go
C4h	CFG_DATA_LL12_LPHDR_VAL	CFG_DATA_LL12_LPHDR_VAL	Go
C8h	CFG_DATA_LL12_THRESHOLD	CFG_DATA_LL12_THRESHOLD	Go
CCh	CFG_DATA_LL13	CFG_DATA_LL13	Go
D0h	CFG_DATA_LL13_LPHDR_VAL	CFG_DATA_LL13_LPHDR_VAL	Go
D4h	CFG_DATA_LL13_THRESHOLD	CFG_DATA_LL13_THRESHOLD	Go
D8h	CFG_DATA_LL14	CFG_DATA_LL14	Go
DCh	CFG_DATA_LL14_LPHDR_VAL	CFG_DATA_LL14_LPHDR_VAL	Go
E0h	CFG_DATA_LL14_THRESHOLD	CFG_DATA_LL14_THRESHOLD	Go
E4h	CFG_DATA_LL15	CFG_DATA_LL15	Go
E8h	CFG_DATA_LL15_LPHDR_VAL	CFG_DATA_LL15_LPHDR_VAL	Go
ECh	CFG_DATA_LL15_THRESHOLD	CFG_DATA_LL15_THRESHOLD	Go
F0h	CFG_DATA_LL16	CFG_DATA_LL16	Go
F4h	CFG_DATA_LL16_LPHDR_VAL	CFG_DATA_LL16_LPHDR_VAL	Go
F8h	CFG_DATA_LL16_THRESHOLD	CFG_DATA_LL16_THRESHOLD	Go
FCh	CFG_DATA_LL17	CFG_DATA_LL17	Go
100h	CFG_DATA_LL17_LPHDR_VAL	CFG_DATA_LL17_LPHDR_VAL	Go
104h	CFG_DATA_LL17_THRESHOLD	CFG_DATA_LL17_THRESHOLD	Go
108h	CFG_DATA_LL18	CFG_DATA_LL18	Go
10Ch	CFG_DATA_LL18_LPHDR_VAL	CFG_DATA_LL18_LPHDR_VAL	Go
110h	CFG_DATA_LL18_THRESHOLD	CFG_DATA_LL18_THRESHOLD	Go
114h	CFG_DATA_LL19	CFG_DATA_LL19	Go
118h	CFG_DATA_LL19_LPHDR_VAL	CFG_DATA_LL19_LPHDR_VAL	Go
11Ch	CFG_DATA_LL19_THRESHOLD	CFG_DATA_LL19_THRESHOLD	Go
120h	CFG_DATA_LL20	CFG_DATA_LL20	Go
124h	CFG_DATA_LL20_LPHDR_VAL	CFG_DATA_LL20_LPHDR_VAL	Go
128h	CFG_DATA_LL20_THRESHOLD	CFG_DATA_LL20_THRESHOLD	Go
12Ch	CFG_DATA_LL21	CFG_DATA_LL21	Go
130h	CFG_DATA_LL21_LPHDR_VAL	CFG_DATA_LL21_LPHDR_VAL	Go
134h	CFG_DATA_LL21_THRESHOLD	CFG_DATA_LL21_THRESHOLD	Go
138h	CFG_DATA_LL22	CFG_DATA_LL22	Go
13Ch	CFG_DATA_LL22_LPHDR_VAL	CFG_DATA_LL22_LPHDR_VAL	Go
140h	CFG_DATA_LL22_THRESHOLD	CFG_DATA_LL22_THRESHOLD	Go
144h	CFG_DATA_LL23	CFG_DATA_LL23	Go
148h	CFG_DATA_LL23_LPHDR_VAL	CFG_DATA_LL23_LPHDR_VAL	Go
14Ch	CFG_DATA_LL23_THRESHOLD	CFG_DATA_LL23_THRESHOLD	Go
150h	CFG_DATA_LL24	CFG_DATA_LL24	Go
154h	CFG_DATA_LL24_LPHDR_VAL	CFG_DATA_LL24_LPHDR_VAL	Go
158h	CFG_DATA_LL24_THRESHOLD	CFG_DATA_LL24_THRESHOLD	Go

Copyright © 2025 Texas Instruments Incorporated

Table 11-747. DSS_CBUFF Registers (continued)

Offset	Acronym	Register Name	Section
15Ch	CFG_DATA_LL25	CFG_DATA_LL25	Go
160h	CFG_DATA_LL25_LPHDR_VAL	CFG_DATA_LL25_LPHDR_VAL	Go
164h	CFG_DATA_LL25_THRESHOLD	CFG_DATA_LL25_THRESHOLD	Go
168h	CFG_DATA_LL26	CFG_DATA_LL26	Go
16Ch	CFG_DATA_LL26_LPHDR_VAL	CFG_DATA_LL26_LPHDR_VAL	Go
170h	CFG_DATA_LL26_THRESHOLD	CFG_DATA_LL26_THRESHOLD	Go
174h	CFG_DATA_LL27	CFG_DATA_LL27	Go
178h	CFG_DATA_LL27_LPHDR_VAL	CFG_DATA_LL27_LPHDR_VAL	Go
17Ch	CFG_DATA_LL27_THRESHOLD	CFG_DATA_LL27_THRESHOLD	Go
180h	CFG_DATA_LL28	CFG_DATA_LL28	Go
184h	CFG_DATA_LL28_LPHDR_VAL	CFG_DATA_LL28_LPHDR_VAL	Go
188h	CFG_DATA_LL28_THRESHOLD	CFG_DATA_LL28_THRESHOLD	Go
18Ch	CFG_DATA_LL29	CFG_DATA_LL29	Go
190h	CFG_DATA_LL29_LPHDR_VAL	CFG_DATA_LL29_LPHDR_VAL	Go
194h	CFG_DATA_LL29_THRESHOLD	CFG_DATA_LL29_THRESHOLD	Go
198h	CFG_DATA_LL30	CFG_DATA_LL30	Go
19Ch	CFG_DATA_LL30_LPHDR_VAL	CFG_DATA_LL30_LPHDR_VAL	Go
1A0h	CFG_DATA_LL30_THRESHOLD	CFG_DATA_LL30_THRESHOLD	Go
1A4h	CFG_DATA_LL31	CFG_DATA_LL31	Go
1A8h	CFG_DATA_LL31_LPHDR_VAL	CFG_DATA_LL31_LPHDR_VAL	Go
1ACh	CFG_DATA_LL31_THRESHOLD	CFG_DATA_LL31_THRESHOLD	Go
1B0h	CFG_LVDS_MAPPING_LANE0_FMT_0	CFG_LVDS_MAPPING_LANE0_FMT_0	Go
1B4h	CFG_LVDS_MAPPING_LANE1_FMT_0	CFG_LVDS_MAPPING_LANE1_FMT_0	Go
1B8h	CFG_LVDS_MAPPING_LANE2_FMT_0	CFG_LVDS_MAPPING_LANE2_FMT_0	Go
1BCh	CFG_LVDS_MAPPING_LANE3_FMT_0	CFG_LVDS_MAPPING_LANE3_FMT_0	Go
1C0h	CFG_LVDS_MAPPING_LANE0_FMT_1	CFG_LVDS_MAPPING_LANE0_FMT_1	Go
1C4h	CFG_LVDS_MAPPING_LANE1_FMT_1	CFG_LVDS_MAPPING_LANE1_FMT_1	Go
1C8h	CFG_LVDS_MAPPING_LANE2_FMT_1	CFG_LVDS_MAPPING_LANE2_FMT_1	Go
1CCh	CFG_LVDS_MAPPING_LANE3_FMT_1	CFG_LVDS_MAPPING_LANE3_FMT_1	Go
1D0h	CFG_LVDS_GEN_0	CFG_LVDS_GEN_0	Go
1D4h	CFG_LVDS_GEN_1	CFG_LVDS_GEN_1	Go
1D8h	CFG_LVDS_GEN_2	CFG_LVDS_GEN_2	Go
1DCh	CFG_MASK_REG0	CFG_MASK_REG0	Go
1E0h	CFG_MASK_REG1	CFG_MASK_REG1	Go
1E4h	CFG_MASK_REG2	CFG_MASK_REG2	Go
1E8h	CFG_MASK_REG3	CFG_MASK_REG3	Go
1ECh	STAT_CBUFF_REG0	STAT_CBUFF_REG0	Go
1F0h	STAT_CBUFF_REG1	STAT_CBUFF_REG1	Go
1F4h	STAT_CBUFF_REG2	STAT_CBUFF_REG2	Go
1F8h	STAT_CBUFF_REG3	STAT_CBUFF_REG3	Go
1FCh	STAT_LVDS_REG0	STAT_LVDS_REG0	Go
200h	STAT_LVDS_REG1	STAT_LVDS_REG1	Go
204h	STAT_LVDS_REG2	STAT_LVDS_REG2	Go
208h	STAT_LVDS_REG3	STAT_LVDS_REG3	Go
20Ch	CLR_CBUFF_REG0	CLR_CBUFF_REG0	Go

Copyright © 2025 Texas Instruments Incorporated

Table 11-747. DSS_CBUFF Registers (continued)

Offset	Acronym	Register Name	Section
210h	CLR_CBUFF_REG1	CLR_CBUFF_REG1	Go
214h	CLR_LVDS_REG0	CLR_LVDS_REG0	Go
218h	CLR_LVDS_REG1	CLR_LVDS_REG1	Go
21Ch	STAT_CBUFF_ECC_REG	STAT_CBUFF_ECC_REG	Go
220h	MASK_CBUFF_ECC_REG	MASK_CBUFF_ECC_REG	Go
224h	CLR_CBUFF_ECC_REG	CLR_CBUFF_ECC_REG	Go
228h	STAT_SAFETY	STAT_SAFETY	Go
22Ch	MASK_SAFETY	MASK_SAFETY	Go
230h	CLR_SAFETY	CLR_SAFETY	Go

Complex bit access types are encoded to fit into small table cells. Table 11-748 shows the codes that are used for access types in this section.

Table 11-748. DSS_CBUFF Access Type Codes

Access Type	Code	Description
Read Type		
R	R	Read
Write Type		
W	W	Write
Reset or Default Value		
-n		Value after reset or the default value

Copyright © 2025 Texas Instruments Incorporated

11.2.2.3.1.1 CONFIG_REG_0 Register (Offset = 0h) [Reset = 00000000h]

CONFIG_REG_0 is shown in Table 11-749.

Return to the Summary Table.

Basic Config register

Table 11-749. CONFIG_REG_0 Register Field Descriptions

Bit	Field	Type	Reset	Description
31-28	dbussel	R/W	0h	TI Internal feature. 1 : This selects the debug bus mode transmission on LVDS
27	cswcrst	R/W	0h	CBUFF controller SW Reset 1 => RESET the CBUFF Controller 0 => RELEASE RESET for CBUFF Controller
26	cswlrst	R/W	0h	TI Internal Feature. LVDS logic SW Reset. Debug feature. 1 => RESET the FSM 0 => RELEASE RESET
25	CFG_FRAME_START_TRIG	SW Trigger generation : Write 1 to this bit to generate a Frame Start SW Trigger		
24	CFG_CHIRP_AVAIL_TRIG	SW Trigger generation : Write 1 to this bit to generate a Chirp Available SW Trigger		
23-20	CFG_VBUSP_BURST_EN	R/W	0h	TI Internal Feature. Only required for 900 Mbps 4 lane trasnmission CSI2 only Programming : 0xA : Burst Enable. Set this only for transmission at 900 Mbps Others : Burst disable.
19	dbusen	R/W	0h	TC2 Mode selection. TI Internal feature. 0 : Normal 1 : When in TC2 mode, setting this bit will enable debug bus to sent via LVDS
18	ccfwpen	R/W	0h	TI Internal Feature. Debug only. CSI2 only Programming : CFG_CSI2_FIFO_WORDS_PROCESSING_EN 0 : Use the fifo_free_words directly from CSI2 by vbusp_mstr to decide how many more words to send. 1 : Process the fifo_free_words and use it by vbusp_mstr to decide how many more words to send.
17-16	cvc3en	R/W	0h	CSI2 only Programming : 0 : No Vsync packet is sent at Frame boundary 1 : A VSYNC Start packet on Virtual Channel 3 is generated at beginning of Frame 2 : A VSYNC End packet on Virtual Channel 3 is generated at end of Frame 3 : A VSYNC Start packet on Virtual Channel 3 is generated at beginning of Frame and a VSYNC End packet on Virtual Channel 3 is generated at end of Frame

Copyright © 2025 Texas Instruments Incorporated

Table 11-749. CONFIG_REG_0 Register Field Descriptions (continued)

Bit	Field	Type	Reset	Description
15-14	cvc2en	R/W	0h	CSI2 only Programming : 0 : No Vsync packet is sent at Frame boundary 1 : A VSYNC Start packet on Virtual Channel 2 is generated at beginning of Frame 2 : A VSYNC End packet on Virtual Channel 2 is generated at end of Frame 3 : A VSYNC Start packet on Virtual Channel 2 is generated at beginning of Frame and a VSYNC End packet on Virtual Channel 2 is generated at end of Frame
13-12	cvc1en	R/W	0h	CSI2 only Programming : 0 : No Vsync packet is sent at Frame boundary 1 : A VSYNC Start packet on Virtual Channel 1 is generated at beginning of Frame 2 : A VSYNC End packet on Virtual Channel 1 is generated at end of Frame 3 : A VSYNC Start packet on Virtual Channel 1 is generated at beginning of Frame and a VSYNC End packet on Virtual Channel 1 is generated at end of Frame
11-10	cvc0en	R/W	0h	CSI2 only Programming : 0 : No Vsync packet is sent at Frame boundary 1 : A VSYNC Start packet on Virtual Channel 0 is generated at beginning of Frame 2 : A VSYNC End packet on Virtual Channel 0 is generated at end of Frame 3 : A VSYNC Start packet on Virtual Channel 0 is generated at beginning of Frame and a VSYNC End packet on Virtual Channel 0 is generated at end of Frame
9	crdthsel	R/W	0h	TI Internal Feature. Debug only. CSI2 only Programming : CFG_RDTHRESHOLD_SEL . This is a Debug feature. Not requred in Programming model 0 : The read threshold is selected based on the Write Side parsing engine 1 : The read threshold is selected based on the Read Side parsing engine.
8	ccfwlen	R/W	0h	TI Internal Feature. Debug only. CSI2 only Programming : CFG_CSI2_FIFO_WORDS_LOAD_SW_EN. This is a Debug feature. Not requred in Programming model When CFG_CSI2_FIFO_WORDS_PROCESSING_EN==1 and CFG_CSI2_FIFO_WORDS_LOAD_SW_EN==1, then a fixed fifo_free_words from CSI2 is not used. Program the CFG_FIFO_FREE_THRESHOLD0 to 0x4
7-4	NU1	R	0h	
3	CFG_SW_TRIG_EN	R/W	0h	Select Chirp Available Trigger Source 0 : Chirp Available trigger will be generated by HW 1 : Chirp Available trigger will be generated by SW
2	cftrigen	R/W	0h	Select Frame Start Trigger Source 0 : Frame trigger will be generated by HW 1 : Frame trigger will be generated by SW
1	CFG_ECC_EN	R/W	0h	0 : Disable ECC on the CBUF FIFO 1 : Enable ECC on the CBUF FIFO
0	CFG_1LVDS_0CSI	R/W	0h	0 : Send data over CSI-2 1 : Send data over LVDS

Copyright © 2025 Texas Instruments Incorporated

11.2.2.3.1.2 CFG_SPHDR_ADDRESS Register (Offset = 4h) [Reset = 00000000h]

CFG_SPHDR_ADDRESS is shown in Table 11-750.

Return to the Summary Table.

Short Packet Header Address

Table 11-750. CFG_SPHDR_ADDRESS Register Field Descriptions

Bit	Field	Type	Reset	Description
31-0	CFG_SPHDR_ADDRESS	R/W	0h	CSI2 Programming : Configure the CSI_PROTOCOL_ENGINE__CSI_VC_SHORT_PACKET_HEADER Address in the CSI Protocol Engine LVDS Programming : Configure with the static value : 0x55555555

Copyright © 2025 Texas Instruments Incorporated

11.2.2.3.1.3 CFG_CMD_HSVAL Register (Offset = 8h) [Reset = 00000000h]

CFG_CMD_HSVAL is shown in Table 11-751.

Return to the Summary Table.

HSYNC Value

Table 11-751. CFG_CMD_HSVAL Register Field Descriptions

Bit	Field	Type	Reset	Description
31-0	CFG_CMD_HSVAL	R/W	0h	CSI2 Programming : Configure the HSync Start Short Packet Value LVDS Programming : If LVDS CRC is enabled : Configure with the static value : 0x55555555 If LVDS CRC is disbaled : Configure with the static value : 0xAAAAAAAA

Copyright © 2025 Texas Instruments Incorporated

11.2.2.3.1.4 CFG_CMD_HEVAL Register (Offset = Ch) [Reset = 00000000h]

CFG_CMD_HEVAL is shown in Table 11-752.

Return to the Summary Table.

HEND Value

Table 11-752. CFG_CMD_HEVAL Register Field Descriptions

Bit	Field	Type	Reset	Description
31-0	CFG_CMD_HEVAL	R/W	0h	CSI2 Programming : Configure the HSync End Short Packet Value LVDS Programming : If LVDS CRC is enabled : Configure with the static value : 0x33333333 If LVDS CRC is disbaled : Configure with the static value : 0xAAAAAAAA

Copyright © 2025 Texas Instruments Incorporated

11.2.2.3.1.5 CFG_CMD_VSVAL Register (Offset = 10h) [Reset = 00000000h]

CFG_CMD_VSVAL is shown in Table 11-753.

Return to the Summary Table.

VSYNC Value

Table 11-753. CFG_CMD_VSVAL Register Field Descriptions

Bit	Field	Type	Reset	Description
31-0	CFG_CMD_VSVAL	R/W	0h	CSI2 Programming : Configure the VSync Start Short Packet Value LVDS Programming : Configure with the static value : 0xAAAAAAAA

Copyright © 2025 Texas Instruments Incorporated

11.2.2.3.1.6 CFG_CMD_VEVAL Register (Offset = 14h) [Reset = 00000000h]

CFG_CMD_VEVAL is shown in Table 11-754.

Return to the Summary Table.

VEND Value

Table 11-754. CFG_CMD_VEVAL Register Field Descriptions

Bit	Field	Type	Reset	Description
31-0	CFG_CMD_VEVAL	R/W	0h	CSI2 Programming : Configure the VSync End Short Packet Value LVDS Programming : Configure with the static value : 0xAAAAAAAA

Copyright © 2025 Texas Instruments Incorporated

11.2.2.3.1.7 CFG_LPHDR_ADDRESS Register (Offset = 18h) [Reset = 00000000h]

CFG_LPHDR_ADDRESS is shown in Table 11-755.

Return to the Summary Table.

Long Packet Address

Table 11-755. CFG_LPHDR_ADDRESS Register Field Descriptions

Bit	Field	Type	Reset	Description
31-0	CFG_LPHDR_ADDRESS	R/W	0h	CSI2 Programming : Configure the CSI_PROTOCOL_ENGINE__CSI_VC_LONG_PACKET_HEADER Address in the CSI Protocol Engine LVDS Programming : Configure with the static value : 0x55555555

Copyright © 2025 Texas Instruments Incorporated

11.2.2.3.1.8 CFG_CHIRPS_PER_FRAME Register (Offset = 20h) [Reset = 00000000h]

CFG_CHIRPS_PER_FRAME is shown in Table 11-756.

Return to the Summary Table.

Number of Chirps per Frame

Table 11-756. CFG_CHIRPS_PER_FRAME Register Field Descriptions

Bit	Field	Type	Reset	Description
31-0	CFG_CHIRPS_PER_FRAME	R/W	0h	Configure the number of Chirps in a Frame

Copyright © 2025 Texas Instruments Incorporated

11.2.2.3.1.9 CFG_FIFO_FREE_THRESHOLD Register (Offset = 24h) [Reset = 00000000h]

CFG_FIFO_FREE_THRESHOLD is shown in Table 11-757.

Return to the Summary Table.

CSI2 FIFO threshold for transferring data from CBUFF to CSI2

Table 11-757. CFG_FIFO_FREE_THRESHOLD Register Field Descriptions

Bit	Field	Type	Reset	Description
31-24	CFG_FIFO_FREE_THRESHOLD3	R/W	0h	TI Internal Feature CSI2 only Programming : Configure the threshold used to fill the FIFO3 in the CSI Protocol engine. CBUFF will send data to the Protocol Engine only if there is a larger number of Free slots that that configured in this register. By default, only 1 FIFO will be used so register programming is not Required in Programming model
23-16	CFG_FIFO_FREE_THRESHOLD2	R/W	0h	TI Internal Feature CSI2 only Programming : Configure the threshold used to fill the FIFO2 in the CSI Protocol engine. CBUFF will send data to the Protocol Engine only if there is a larger number of Free slots that that configured in this register. By default, only 1 FIFO will be used so register programming is not Required in Programming model
15-8	CFG_FIFO_FREE_THRESHOLD1	R/W	0h	TI Internal Feature CSI2 only Programming : Configure the threshold used to fill the FIFO1 in the CSI Protocol engine. CBUFF will send data to the Protocol Engine only if there is a larger number of Free slots that that configured in this register. By default, only 1 FIFO will be used so register programming is not Required in Programming model
7-0	CFG_FIFO_FREE_THRESHOLD0	R/W	0h	CSI2 only Programming : Configure the threshold used to fill the FIFO0 in the CSI Protocol engine. CBUFF will send data to the Protocol Engine only if there is a larger number of Free slots that that configured in this register

Copyright © 2025 Texas Instruments Incorporated

11.2.2.3.1.10 CFG_LPPYLD_ADDRESS Register (Offset = 28h) [Reset = 00000000h]

CFG_LPPYLD_ADDRESS is shown in Table 11-758.

Return to the Summary Table.

Long payload Address

Table 11-758. CFG_LPPYLD_ADDRESS Register Field Descriptions

Bit	Field	Type	Reset	Description
31-0	CFG_LPPYLD_ADDRESS	R/W	0h	CSI2 only Programming : Configure the CSI_PROTOCOL_ENGINE__CSI_VC_LONG_PACKET_PAYLOAD Address in the CSI Protocol Engine

Copyright © 2025 Texas Instruments Incorporated

11.2.2.3.1.11 CFG_DELAY_CONFIG Register (Offset = 2Ch) [Reset = 00000000h]

CFG_DELAY_CONFIG is shown in Table 11-759.

Return to the Summary Table.

Delay Config Registers

Table 11-759. CFG_DELAY_CONFIG Register Field Descriptions

Bit	Field	Type	Reset	Description
31-24	NU	R	0h	
23-16	CFG_DATA_WR_DELAY	R/W	0h	TI Internal Feature CSI2 only Programming : Configure an additional delay after sending a Long packet Payload. This is a Debug feature. Not requred in Programming model
15-8	CFG_LPHDR_DELAY	R/W	0h	TI Internal Feature CSI2 only Programming : Configure an additional delay after sending a Long packet Header. This is a Debug feature. Not requred in Programming model
7-0	CFG_SPHDR_DELAY	R/W	0h	TI Internal Feature CSI2 only Programming : Configure an additional delay after sending a Short packet. This is a Debug feature. Not requred in Programming model

Copyright © 2025 Texas Instruments Incorporated

11.2.2.3.1.12 CFG_DATA_LL0 Register (Offset = 30h) [Reset = 00000000h]

CFG_DATA_LL0 is shown in Table 11-760.

Return to the Summary Table.

Payload Description : Linked list entry 0

Table 11-760. CFG_DATA_LL0 Register Field Descriptions

Bit	Field	Type	Reset	Description
31	LL0_DATA_WR_DELAY_EN	R/W	0h	TI Internal Feature CSI2 only Programming : Use the Packet Delay configured in CFG_DELAY_CONFIG. This is a Debug feature. Not requred in Programming model
30	LL0_LONG_PKT_DELAY_EN	R/W	0h	TI Internal Feature CSI2 only Programming : Use the Packet Delay configured in CFG_DELAY_CONFIG. This is a Debug feature. Not requred in Programming model
29	LL0_SHORT_PKT_DELAY_EN	R/W	0h	TI Internal Feature CSI2 only Programming : Use the Packet Delay configured in CFG_DELAY_CONFIG. This is a Debug feature. Not requred in Programming model
28	LL0_CRC_EN	R/W	0h	0 : CRC is disbaled 1 : This linklist corresponds to ADC Buffer data. Enable the CRC check from ADC Buffer to CBUFF
27	LL0_LPHDR_EN	R/W	0h	CSI2 Programming : 1 : Entry is start of a new CSI-2 packet. Send the LP Payload Header before sending data corresponind to this Linklist 0 : Link list is not the start of a Long packet but part of previous packet and hence directly send data LVDS Programming : 1 : Entry is start of a new LVDS Frame 0 : Entry is not the start of the new LVDS Frame
26	LL0_WAITFOR_PKTSENT	R/W	0h	TI Internal Feature Reserved for furture debug enhancement 1 : Wait for packet sent signal ack from CSI2 to move forward 0 : Do not wait for packet sent
25-23	LL0_BITPOS_SEL	R/W	0h	TI Internal Feature. Reserved for future use to select which of the 12-bits or 14-bits to be picked up from 16-bit CBUFF unit
22-9	LL0_SIZE	R/W	0h	Configure the Size of the data in terms of the numer of samples (not in terms of number of bytes). Sample refers to a 16 bit CBUFF Unit
8	LL0_FMT_IN	R/W	0h	0 : The incoming data sources for this Linklist is aligned to 128-bit 1 : The incoming data sources for this Linklist is aligned to 96-bit
7	LL0_FMT_MAP	R/W	0h	LVDS only : 0 : Choose CFG_LVDS_MAPPING_LANEx_FMT_0_y 1 : Choose CFG_LVDS_MAPPING_LANEx_FMT_1_y
6-5	LL0_FMT	R/W	0h	Specify the LVDS/CSI2 output format. 00 - 16bit 01 - 14-bit 10 - 12-bit
4-3	LL0_VCNUM	R/W	0h	CSI-2 : Configure the Virtual Channel Number for the Long Packet over which this data is sent
2	LL0_HS	R/W	0h	CSI-2 : 0 : Do not send an Hsync Start packet before sending this data 1 : Send an Hsync Start Packet before sending this data LVDS : 0 : Entry is not the first data of LVDS Frame 1 : Entry is the first data in the LVDS Frame
1	LL0_HE	R/W	0h	CSI-2 : 0 : Do not send an Hsync End packet after sending this data 1 : Send an Hsync End Packet after sending this data LVDS : 0 : Entry is not the last data of LVDS Frame 1 : Entry is the last data in the LVDS Frame
0	LL0_VALID	R/W	0h	0 : Linklist entry is invalid 1 : Linklist entry is valid

Copyright © 2025 Texas Instruments Incorporated

11.2.2.3.1.13 CFG_DATA_LL0_LPHDR_VAL Register (Offset = 34h) [Reset = 00000000h]

CFG_DATA_LL0_LPHDR_VAL is shown in Table 11-761.

Return to the Summary Table.

Payload Description : Linked list entry 0

Table 11-761. CFG_DATA_LL0_LPHDR_VAL Register Field Descriptions

Bit	Field	Type	Reset	Description
31-0	LL0_LPHDR_VAL	R/W	0h	CSI-2 Programming : Configure the Long Packet Header to be sent to the Protocol Engine if the LPHDR_EN field is set for the linklist. LVDS Programming : Configure with the static value : 0xBBBBBBBB

Copyright © 2025 Texas Instruments Incorporated

11.2.2.3.1.14 CFG_DATA_LL0_THRESHOLD Register (Offset = 38h) [Reset = 0000X0X0h]

CFG_DATA_LL0_THRESHOLD is shown in Table 11-762.

Return to the Summary Table.

Table 11-762. CFG_DATA_LL0_THRESHOLD Register Field Descriptions

Bit	Field	Type	Reset	Description
31-19	NU3	R	0h	
18-16	ll0dman	R/W	0h	If the long Packet Header is enabled, CBUFF can generate a DMA request to trigger the DMA trasnfer for the new packet 0 : Send a Request on DMA HW Req output line 0 1 : Send a Request on DMA HW Req output line 1 2 : Send a Request on DMA HW Req output line 2 3 : Send a Request on DMA HW Req output line 3 4 : Send a Request on DMA HW Req output line 4 5 : Send a Request on DMA HW Req output line 5 6 : Send a Request on DMA HW Req output line 6 7 : Do not generate dma trigger
15	NU2	R	Bh	
14-8	LL0_WR_THRESHOLD	R/W	0h	Configure the CBUFF FIFO Write threshold over which CBUFF will stall the DMA write to the CBUFF. Static configuration. This can be programmed to fixed value mentioned in the Programming Model
7	NU1	R	Bh	
6-0	LL0_RD_THRESHOLD	R/W	0h	Configure the CBUFF Read threshold to be Reached before sending the data over CSI2/LVDS and start draining the CBUFF FIFO. Static configuration. This can be programmed to fixed value mentioned in the Programming Model

Copyright © 2025 Texas Instruments Incorporated

11.2.2.3.1.15 CFG_DATA_LL1 Register (Offset = 3Ch) [Reset = 00000000h]

CFG_DATA_LL1 is shown in Table 11-763.

Return to the Summary Table.

Table 11-763. CFG_DATA_LL1 Register Field Descriptions

Bit	Field	Type	Reset	Description
31	LL1_DATA_WR_DELAY_EN	R/W	0h	TI Internal Feature CSI2 only Programming : Use the Packet Delay configured in CFG_DELAY_CONFIG. This is a Debug feature. Not requred in Programming model
30	LL1_LONG_PKT_DELAY_EN	R/W	0h	TI Internal Feature CSI2 only Programming : Use the Packet Delay configured in CFG_DELAY_CONFIG. This is a Debug feature. Not requred in Programming model
29	LL1_SHORT_PKT_DELAY_EN	R/W	0h	TI Internal Feature CSI2 only Programming : Use the Packet Delay configured in CFG_DELAY_CONFIG. This is a Debug feature. Not requred in Programming model
28	LL1_CRC_EN	R/W	0h	0 : CRC is disbaled 1 : This linklist corresponds to ADC Buffer data. Enable the CRC check from ADC Buffer to CBUFF
27	LL1_LPHDR_EN	R/W	0h	CSI2 Programming : 1 : Entry is start of a new CSI-2 packet. Send the LP Payload Header before sending data corresponind to this Linklist 0 : Link list is not the start of a Long packet but part of previous packet and hence directly send data LVDS Programming : 1 : Entry is start of a new LVDS Frame 0 : Entry is not the start of the new LVDS Frame
26	LL1_WAITFOR_PKTSENT	R/W	0h	TI Internal Feature Reserved for furture debug enhancement 1 : Wait for packet sent signal ack from CSI2 to move forward 0 : Do not wait for packet sent
25-23	LL1_BITPOS_SEL	R/W	0h	TI Internal Feature. Reserved for future use to select which of the 12-bits or 14-bits to be picked up from 16-bit CBUFF unit
22-9	LL1_SIZE	R/W	0h	Configure the Size of the data in terms of the numer of samples (not in terms of number of bytes). Sample refers to a 16 bit CBUFF Unit
8	LL1_FMT_IN	R/W	0h	0 : The incoming data sources for this Linklist is aligned to 128-bit 1 : The incoming data sources for this Linklist is aligned to 96-bit
7	LL1_FMT_MAP	R/W	0h	LVDS only : 0 : Choose CFG_LVDS_MAPPING_LANEx_FMT_0_y 1 : Choose CFG_LVDS_MAPPING_LANEx_FMT_1_y
6-5	LL1_FMT	R/W	0h	Specify the LVDS/CSI2 output format. 00 - 16bit 01 - 14-bit 10 - 12-bit
4-3	LL1_VCNUM	R/W	0h	CSI-2 : Configure the Virtual Channel Number for the Long Packet over which this data is sent
2	LL1_HS	R/W	0h	CSI-2 : 0 : Do not send an Hsync Start packet before sending this data 1 : Send an Hsync Start Packet before sending this data LVDS : 0 : Entry is not the first data of LVDS Frame 1 : Entry is the first data in the LVDS Frame
1	LL1_HE	R/W	0h	CSI-2 : 0 : Do not send an Hsync End packet after sending this data 1 : Send an Hsync End Packet after sending this data LVDS : 0 : Entry is not the last data of LVDS Frame 1 : Entry is the last data in the LVDS Frame
0	LL1_VALID	R/W	0h	0 : Linklist entry is invalid 1 : Linklist entry is valid

Copyright © 2025 Texas Instruments Incorporated

11.2.2.3.1.16 CFG_DATA_LL1_LPHDR_VAL Register (Offset = 40h) [Reset = 00000000h]

CFG_DATA_LL1_LPHDR_VAL is shown in Table 11-764.

Return to the Summary Table.

Table 11-764. CFG_DATA_LL1_LPHDR_VAL Register Field Descriptions

Bit	Field	Type	Reset	Description
31-0	LL1_LPHDR_VAL	R/W	0h	CSI-2 Programming : Configure the Long Packet Header to be sent to the Protocol Engine if the LPHDR_EN field is set for the linklist. LVDS Programming : Configure with the static value : 0xBBBBBBBB

Copyright © 2025 Texas Instruments Incorporated

11.2.2.3.1.17 CFG_DATA_LL1_THRESHOLD Register (Offset = 44h) [Reset = 0000X0X0h]

CFG_DATA_LL1_THRESHOLD is shown in Table 11-765.

Return to the Summary Table.

Table 11-765. CFG_DATA_LL1_THRESHOLD Register Field Descriptions

Bit	Field	Type	Reset	Description
31-19	NU3	R	0h	
18-16	ll1dman	R/W	0h	If the long Packet Header is enabled, CBUFF can generate a DMA request to trigger the DMA trasnfer for the new packet 0 : Send a Request on DMA HW Req output line 0 1 : Send a Request on DMA HW Req output line 1 2 : Send a Request on DMA HW Req output line 2 3 : Send a Request on DMA HW Req output line 3 4 : Send a Request on DMA HW Req output line 4 5 : Send a Request on DMA HW Req output line 5 6 : Send a Request on DMA HW Req output line 6 7 : Do not generate dma trigger
15	NU2	R	Bh	
14-8	LL1_WR_THRESHOLD	R/W	0h	Configure the CBUFF FIFO Write threshold over which CBUFF will stall the DMA write to the CBUFF. Static configuration. This can be programmed to fixed value mentioned in the Programming Model
7	NU1	R	Bh	
6-0	LL1_RD_THRESHOLD	R/W	0h	Configure the CBUFF Read threshold to be Reached before sending the data over CSI2/LVDS and start draining the CBUFF FIFO. Static configuration. This can be programmed to fixed value mentioned in the Programming Model

Copyright © 2025 Texas Instruments Incorporated

11.2.2.3.1.18 CFG_DATA_LL2 Register (Offset = 48h) [Reset = 00000000h]

CFG_DATA_LL2 is shown in Table 11-766.

Return to the Summary Table.

Table 11-766. CFG_DATA_LL2 Register Field Descriptions

Bit	Field	Type	Reset	Description
31	LL2_DATA_WR_DELAY_EN	R/W	0h	TI Internal Feature CSI2 only Programming : Use the Packet Delay configured in CFG_DELAY_CONFIG. This is a Debug feature. Not requred in Programming model
30	LL2_LONG_PKT_DELAY_EN	R/W	0h	TI Internal Feature CSI2 only Programming : Use the Packet Delay configured in CFG_DELAY_CONFIG. This is a Debug feature. Not requred in Programming model
29	LL2_SHORT_PKT_DELAY_EN	R/W	0h	TI Internal Feature CSI2 only Programming : Use the Packet Delay configured in CFG_DELAY_CONFIG. This is a Debug feature. Not requred in Programming model
28	LL2_CRC_EN	R/W	0h	0 : CRC is disbaled 1 : This linklist corresponds to ADC Buffer data. Enable the CRC check from ADC Buffer to CBUFF
27	LL2_LPHDR_EN	R/W	0h	CSI2 Programming : 1 : Entry is start of a new CSI-2 packet. Send the LP Payload Header before sending data corresponind to this Linklist 0 : Link list is not the start of a Long packet but part of previous packet and hence directly send data LVDS Programming : 1 : Entry is start of a new LVDS Frame 0 : Entry is not the start of the new LVDS Frame
26	LL2_WAITFOR_PKTSENT	R/W	0h	TI Internal Feature Reserved for furture debug enhancement 1 : Wait for packet sent signal ack from CSI2 to move forward 0 : Do not wait for packet sent
25-23	LL2_BITPOS_SEL	R/W	0h	TI Internal Feature. Reserved for future use to select which of the 12-bits or 14-bits to be picked up from 16-bit CBUFF unit
22-9	LL2_SIZE	R/W	0h	Configure the Size of the data in terms of the numer of samples (not in terms of number of bytes). Sample refers to a 16 bit CBUFF Unit
8	LL2_FMT_IN	R/W	0h	0 : The incoming data sources for this Linklist is aligned to 128-bit 1 : The incoming data sources for this Linklist is aligned to 96-bit
7	LL2_FMT_MAP	R/W	0h	LVDS only : 0 : Choose CFG_LVDS_MAPPING_LANEx_FMT_0_y 1 : Choose CFG_LVDS_MAPPING_LANEx_FMT_1_y
6-5	LL2_FMT	R/W	0h	Specify the LVDS/CSI2 output format. 00 - 16bit 01 - 14-bit 10 - 12-bit
4-3	LL2_VCNUM	R/W	0h	CSI-2 : Configure the Virtual Channel Number for the Long Packet over which this data is sent
2	LL2_HS	R/W	0h	CSI-2 : 0 : Do not send an Hsync Start packet before sending this data 1 : Send an Hsync Start Packet before sending this data LVDS : 0 : Entry is not the first data of LVDS Frame 1 : Entry is the first data in the LVDS Frame
1	LL2_HE	R/W	0h	CSI-2 : 0 : Do not send an Hsync End packet after sending this data 1 : Send an Hsync End Packet after sending this data LVDS : 0 : Entry is not the last data of LVDS Frame 1 : Entry is the last data in the LVDS Frame
0	LL2_VALID	R/W	0h	0 : Linklist entry is invalid 1 : Linklist entry is valid

Copyright © 2025 Texas Instruments Incorporated

11.2.2.3.1.19 CFG_DATA_LL2_LPHDR_VAL Register (Offset = 4Ch) [Reset = 00000000h]

CFG_DATA_LL2_LPHDR_VAL is shown in Table 11-767.

Return to the Summary Table.

Table 11-767. CFG_DATA_LL2_LPHDR_VAL Register Field Descriptions

Bit	Field	Type	Reset	Description
31-0	LL2_LPHDR_VAL	R/W	0h	CSI-2 Programming : Configure the Long Packet Header to be sent to the Protocol Engine if the LPHDR_EN field is set for the linklist. LVDS Programming : Configure with the static value : 0xBBBBBBBB

Copyright © 2025 Texas Instruments Incorporated

11.2.2.3.1.20 CFG_DATA_LL2_THRESHOLD Register (Offset = 50h) [Reset = 0000X0X0h]

CFG_DATA_LL2_THRESHOLD is shown in Table 11-768.

Return to the Summary Table.

Table 11-768. CFG_DATA_LL2_THRESHOLD Register Field Descriptions

Bit	Field	Type	Reset	Description
31-19	NU3	R	0h	
18-16	ll2dman	R/W	0h	If the long Packet Header is enabled, CBUFF can generate a DMA request to trigger the DMA trasnfer for the new packet 0 : Send a Request on DMA HW Req output line 0 1 : Send a Request on DMA HW Req output line 1 2 : Send a Request on DMA HW Req output line 2 3 : Send a Request on DMA HW Req output line 3 4 : Send a Request on DMA HW Req output line 4 5 : Send a Request on DMA HW Req output line 5 6 : Send a Request on DMA HW Req output line 6 7 : Do not generate dma trigger
15	NU2	R	Bh	
14-8	LL2_WR_THRESHOLD	R/W	0h	Configure the CBUFF FIFO Write threshold over which CBUFF will stall the DMA write to the CBUFF. Static configuration. This can be programmed to fixed value mentioned in the Programming Model
7	NU1	R	Bh	
6-0	LL2_RD_THRESHOLD	R/W	0h	Configure the CBUFF Read threshold to be Reached before sending the data over CSI2/LVDS and start draining the CBUFF FIFO. Static configuration. This can be programmed to fixed value mentioned in the Programming Model

Copyright © 2025 Texas Instruments Incorporated

11.2.2.3.1.21 CFG_DATA_LL3 Register (Offset = 54h) [Reset = 00000000h]

CFG_DATA_LL3 is shown in Table 11-769.

Return to the Summary Table.

Table 11-769. CFG_DATA_LL3 Register Field Descriptions

Bit	Field	Type	Reset	Description
31	LL3_DATA_WR_DELAY_EN	R/W	0h	TI Internal Feature CSI2 only Programming : Use the Packet Delay configured in CFG_DELAY_CONFIG. This is a Debug feature. Not requred in Programming model
30	LL3_LONG_PKT_DELAY_EN	R/W	0h	TI Internal Feature CSI2 only Programming : Use the Packet Delay configured in CFG_DELAY_CONFIG. This is a Debug feature. Not requred in Programming model
29	LL3_SHORT_PKT_DELAY_EN	R/W	0h	TI Internal Feature CSI2 only Programming : Use the Packet Delay configured in CFG_DELAY_CONFIG. This is a Debug feature. Not requred in Programming model
28	LL3_CRC_EN	R/W	0h	0 : CRC is disbaled 1 : This linklist corresponds to ADC Buffer data. Enable the CRC check from ADC Buffer to CBUFF
27	LL3_LPHDR_EN	R/W	0h	CSI2 Programming : 1 : Entry is start of a new CSI-2 packet. Send the LP Payload Header before sending data corresponind to this Linklist 0 : Link list is not the start of a Long packet but part of previous packet and hence directly send data LVDS Programming : 1 : Entry is start of a new LVDS Frame 0 : Entry is not the start of the new LVDS Frame
26	LL3_WAITFOR_PKTSENT	R/W	0h	TI Internal Feature Reserved for furture debug enhancement 1 : Wait for packet sent signal ack from CSI2 to move forward 0 : Do not wait for packet sent
25-23	LL3_BITPOS_SEL	R/W	0h	TI Internal Feature. Reserved for future use to select which of the 12-bits or 14-bits to be picked up from 16-bit CBUFF unit
22-9	LL3_SIZE	R/W	0h	Configure the Size of the data in terms of the numer of samples (not in terms of number of bytes). Sample refers to a 16 bit CBUFF Unit
8	LL3_FMT_IN	R/W	0h	0 : The incoming data sources for this Linklist is aligned to 128-bit 1 : The incoming data sources for this Linklist is aligned to 96-bit
7	LL3_FMT_MAP	R/W	0h	LVDS only : 0 : Choose CFG_LVDS_MAPPING_LANEx_FMT_0_y 1 : Choose CFG_LVDS_MAPPING_LANEx_FMT_1_y
6-5	LL3_FMT	R/W	0h	Specify the LVDS/CSI2 output format. 00 - 16bit 01 - 14-bit 10 - 12-bit
4-3	LL3_VCNUM	R/W	0h	CSI-2 : Configure the Virtual Channel Number for the Long Packet over which this data is sent
2	LL3_HS	R/W	0h	CSI-2 : 0 : Do not send an Hsync Start packet before sending this data 1 : Send an Hsync Start Packet before sending this data LVDS : 0 : Entry is not the first data of LVDS Frame 1 : Entry is the first data in the LVDS Frame
1	LL3_HE	R/W	0h	CSI-2 : 0 : Do not send an Hsync End packet after sending this data 1 : Send an Hsync End Packet after sending this data LVDS : 0 : Entry is not the last data of LVDS Frame 1 : Entry is the last data in the LVDS Frame
0	LL3_VALID	R/W	0h	0 : Linklist entry is invalid 1 : Linklist entry is valid

Copyright © 2025 Texas Instruments Incorporated

11.2.2.3.1.22 CFG_DATA_LL3_LPHDR_VAL Register (Offset = 58h) [Reset = 00000000h]

CFG_DATA_LL3_LPHDR_VAL is shown in Table 11-770.

Return to the Summary Table.

Table 11-770. CFG_DATA_LL3_LPHDR_VAL Register Field Descriptions

Bit	Field	Type	Reset	Description
31-0	LL3_LPHDR_VAL	R/W	0h	CSI-2 Programming : Configure the Long Packet Header to be sent to the Protocol Engine if the LPHDR_EN field is set for the linklist. LVDS Programming : Configure with the static value : 0xBBBBBBBB

Copyright © 2025 Texas Instruments Incorporated

11.2.2.3.1.23 CFG_DATA_LL3_THRESHOLD Register (Offset = 5Ch) [Reset = 0000X0X0h]

CFG_DATA_LL3_THRESHOLD is shown in Table 11-771.

Return to the Summary Table.

Table 11-771. CFG_DATA_LL3_THRESHOLD Register Field Descriptions

Bit	Field	Type	Reset	Description
31-19	NU3	R	0h	
18-16	ll3dman	R/W	0h	If the long Packet Header is enabled, CBUFF can generate a DMA request to trigger the DMA trasnfer for the new packet 0 : Send a Request on DMA HW Req output line 0 1 : Send a Request on DMA HW Req output line 1 2 : Send a Request on DMA HW Req output line 2 3 : Send a Request on DMA HW Req output line 3 4 : Send a Request on DMA HW Req output line 4 5 : Send a Request on DMA HW Req output line 5 6 : Send a Request on DMA HW Req output line 6 7 : Do not generate dma trigger
15	NU2	R	Bh	
14-8	LL3_WR_THRESHOLD	R/W	0h	Configure the CBUFF FIFO Write threshold over which CBUFF will stall the DMA write to the CBUFF. Static configuration. This can be programmed to fixed value mentioned in the Programming Model
7	NU1	R	Bh	
6-0	LL3_RD_THRESHOLD	R/W	0h	Configure the CBUFF Read threshold to be Reached before sending the data over CSI2/LVDS and start draining the CBUFF FIFO. Static configuration. This can be programmed to fixed value mentioned in the Programming Model

Copyright © 2025 Texas Instruments Incorporated

11.2.2.3.1.24 CFG_DATA_LL4 Register (Offset = 60h) [Reset = 00000000h]

CFG_DATA_LL4 is shown in Table 11-772.

Return to the Summary Table.

Table 11-772. CFG_DATA_LL4 Register Field Descriptions

Bit	Field	Type	Reset	Description
31	LL4_DATA_WR_DELAY_EN	R/W	0h	TI Internal Feature CSI2 only Programming : Use the Packet Delay configured in CFG_DELAY_CONFIG. This is a Debug feature. Not requred in Programming model
30	LL4_LONG_PKT_DELAY_EN	R/W	0h	TI Internal Feature CSI2 only Programming : Use the Packet Delay configured in CFG_DELAY_CONFIG. This is a Debug feature. Not requred in Programming model
29	LL4_SHORT_PKT_DELAY_EN	R/W	0h	TI Internal Feature CSI2 only Programming : Use the Packet Delay configured in CFG_DELAY_CONFIG. This is a Debug feature. Not requred in Programming model
28	LL4_CRC_EN	R/W	0h	0 : CRC is disbaled 1 : This linklist corresponds to ADC Buffer data. Enable the CRC check from ADC Buffer to CBUFF
27	LL4_LPHDR_EN	R/W	0h	CSI2 Programming : 1 : Entry is start of a new CSI-2 packet. Send the LP Payload Header before sending data corresponind to this Linklist 0 : Link list is not the start of a Long packet but part of previous packet and hence directly send data LVDS Programming : 1 : Entry is start of a new LVDS Frame 0 : Entry is not the start of the new LVDS Frame
26	LL4_WAITFOR_PKTSENT	R/W	0h	TI Internal Feature Reserved for furture debug enhancement 1 : Wait for packet sent signal ack from CSI2 to move forward 0 : Do not wait for packet sent
25-23	LL4_BITPOS_SEL	R/W	0h	TI Internal Feature. Reserved for future use to select which of the 12-bits or 14-bits to be picked up from 16-bit CBUFF unit
22-9	LL4_SIZE	R/W	0h	Configure the Size of the data in terms of the numer of samples (not in terms of number of bytes). Sample refers to a 16 bit CBUFF Unit
8	LL4_FMT_IN	R/W	0h	0 : The incoming data sources for this Linklist is aligned to 128-bit 1 : The incoming data sources for this Linklist is aligned to 96-bit
7	LL4_FMT_MAP	R/W	0h	LVDS only : 0 : Choose CFG_LVDS_MAPPING_LANEx_FMT_0_y 1 : Choose CFG_LVDS_MAPPING_LANEx_FMT_1_y
6-5	LL4_FMT	R/W	0h	Specify the LVDS/CSI2 output format. 00 - 16bit 01 - 14-bit 10 - 12-bit
4-3	LL4_VCNUM	R/W	0h	CSI-2 : Configure the Virtual Channel Number for the Long Packet over which this data is sent
2	LL4_HS	R/W	0h	CSI-2 : 0 : Do not send an Hsync Start packet before sending this data 1 : Send an Hsync Start Packet before sending this data LVDS : 0 : Entry is not the first data of LVDS Frame 1 : Entry is the first data in the LVDS Frame
1	LL4_HE	R/W	0h	CSI-2 : 0 : Do not send an Hsync End packet after sending this data 1 : Send an Hsync End Packet after sending this data LVDS : 0 : Entry is not the last data of LVDS Frame 1 : Entry is the last data in the LVDS Frame
0	LL4_VALID	R/W	0h	0 : Linklist entry is invalid 1 : Linklist entry is valid

Copyright © 2025 Texas Instruments Incorporated

11.2.2.3.1.25 CFG_DATA_LL4_LPHDR_VAL Register (Offset = 64h) [Reset = 00000000h]

CFG_DATA_LL4_LPHDR_VAL is shown in Table 11-773.

Return to the Summary Table.

Table 11-773. CFG_DATA_LL4_LPHDR_VAL Register Field Descriptions

Bit	Field	Type	Reset	Description
31-0	LL4_LPHDR_VAL	R/W	0h	CSI-2 Programming : Configure the Long Packet Header to be sent to the Protocol Engine if the LPHDR_EN field is set for the linklist. LVDS Programming : Configure with the static value : 0xBBBBBBBB

Copyright © 2025 Texas Instruments Incorporated

11.2.2.3.1.26 CFG_DATA_LL4_THRESHOLD Register (Offset = 68h) [Reset = 0000X0X0h]

CFG_DATA_LL4_THRESHOLD is shown in Table 11-774.

Return to the Summary Table.

Table 11-774. CFG_DATA_LL4_THRESHOLD Register Field Descriptions

Bit	Field	Type	Reset	Description
31-19	NU3	R	0h	
18-16	ll4dman	R/W	0h	If the long Packet Header is enabled, CBUFF can generate a DMA request to trigger the DMA trasnfer for the new packet 0 : Send a Request on DMA HW Req output line 0 1 : Send a Request on DMA HW Req output line 1 2 : Send a Request on DMA HW Req output line 2 3 : Send a Request on DMA HW Req output line 3 4 : Send a Request on DMA HW Req output line 4 5 : Send a Request on DMA HW Req output line 5 6 : Send a Request on DMA HW Req output line 6 7 : Do not generate dma trigger
15	NU2	R	Bh	
14-8	LL4_WR_THRESHOLD	R/W	0h	Configure the CBUFF FIFO Write threshold over which CBUFF will stall the DMA write to the CBUFF. Static configuration. This can be programmed to fixed value mentioned in the Programming Model
7	NU1	R	Bh	
6-0	LL4_RD_THRESHOLD	R/W	0h	Configure the CBUFF Read threshold to be Reached before sending the data over CSI2/LVDS and start draining the CBUFF FIFO. Static configuration. This can be programmed to fixed value mentioned in the Programming Model

Copyright © 2025 Texas Instruments Incorporated

11.2.2.3.1.27 CFG_DATA_LL5 Register (Offset = 6Ch) [Reset = 00000000h]

CFG_DATA_LL5 is shown in Table 11-775.

Return to the Summary Table.

Table 11-775. CFG_DATA_LL5 Register Field Descriptions

Bit	Field	Type	Reset	Description
31	LL5_DATA_WR_DELAY_EN	R/W	0h	TI Internal Feature CSI2 only Programming : Use the Packet Delay configured in CFG_DELAY_CONFIG. This is a Debug feature. Not requred in Programming model
30	LL5_LONG_PKT_DELAY_EN	R/W	0h	TI Internal Feature CSI2 only Programming : Use the Packet Delay configured in CFG_DELAY_CONFIG. This is a Debug feature. Not requred in Programming model
29	LL5_SHORT_PKT_DELAY_EN	R/W	0h	TI Internal Feature CSI2 only Programming : Use the Packet Delay configured in CFG_DELAY_CONFIG. This is a Debug feature. Not requred in Programming model
28	LL5_CRC_EN	R/W	0h	0 : CRC is disbaled 1 : This linklist corresponds to ADC Buffer data. Enable the CRC check from ADC Buffer to CBUFF
27	LL5_LPHDR_EN	R/W	0h	CSI2 Programming : 1 : Entry is start of a new CSI-2 packet. Send the LP Payload Header before sending data corresponind to this Linklist 0 : Link list is not the start of a Long packet but part of previous packet and hence directly send data LVDS Programming : 1 : Entry is start of a new LVDS Frame 0 : Entry is not the start of the new LVDS Frame
26	LL5_WAITFOR_PKTSENT	R/W	0h	TI Internal Feature Reserved for furture debug enhancement 1 : Wait for packet sent signal ack from CSI2 to move forward 0 : Do not wait for packet sent
25-23	LL5_BITPOS_SEL	R/W	0h	TI Internal Feature. Reserved for future use to select which of the 12-bits or 14-bits to be picked up from 16-bit CBUFF unit
22-9	LL5_SIZE	R/W	0h	Configure the Size of the data in terms of the numer of samples (not in terms of number of bytes). Sample refers to a 16 bit CBUFF Unit
8	LL5_FMT_IN	R/W	0h	0 : The incoming data sources for this Linklist is aligned to 128-bit 1 : The incoming data sources for this Linklist is aligned to 96-bit
7	LL5_FMT_MAP	R/W	0h	LVDS only : 0 : Choose CFG_LVDS_MAPPING_LANEx_FMT_0_y 1 : Choose CFG_LVDS_MAPPING_LANEx_FMT_1_y
6-5	LL5_FMT	R/W	0h	Specify the LVDS/CSI2 output format. 00 - 16bit 01 - 14-bit 10 - 12-bit
4-3	LL5_VCNUM	R/W	0h	CSI-2 : Configure the Virtual Channel Number for the Long Packet over which this data is sent
2	LL5_HS	R/W	0h	CSI-2 : 0 : Do not send an Hsync Start packet before sending this data 1 : Send an Hsync Start Packet before sending this data LVDS : 0 : Entry is not the first data of LVDS Frame 1 : Entry is the first data in the LVDS Frame
1	LL5_HE	R/W	0h	CSI-2 : 0 : Do not send an Hsync End packet after sending this data 1 : Send an Hsync End Packet after sending this data LVDS : 0 : Entry is not the last data of LVDS Frame 1 : Entry is the last data in the LVDS Frame
0	LL5_VALID	R/W	0h	0 : Linklist entry is invalid 1 : Linklist entry is valid

Copyright © 2025 Texas Instruments Incorporated

11.2.2.3.1.28 CFG_DATA_LL5_LPHDR_VAL Register (Offset = 70h) [Reset = 00000000h]

CFG_DATA_LL5_LPHDR_VAL is shown in Table 11-776.

Return to the Summary Table.

Table 11-776. CFG_DATA_LL5_LPHDR_VAL Register Field Descriptions

Bit	Field	Type	Reset	Description
31-0	LL5_LPHDR_VAL	R/W	0h	CSI-2 Programming : Configure the Long Packet Header to be sent to the Protocol Engine if the LPHDR_EN field is set for the linklist. LVDS Programming : Configure with the static value : 0xBBBBBBBB

Copyright © 2025 Texas Instruments Incorporated

11.2.2.3.1.29 CFG_DATA_LL5_THRESHOLD Register (Offset = 74h) [Reset = 0000X0X0h]

CFG_DATA_LL5_THRESHOLD is shown in Table 11-777.

Return to the Summary Table.

Table 11-777. CFG_DATA_LL5_THRESHOLD Register Field Descriptions

Bit	Field	Type	Reset	Description
31-19	NU3	R	0h	
18-16	ll5dman	R/W	0h	If the long Packet Header is enabled, CBUFF can generate a DMA request to trigger the DMA trasnfer for the new packet 0 : Send a Request on DMA HW Req output line 0 1 : Send a Request on DMA HW Req output line 1 2 : Send a Request on DMA HW Req output line 2 3 : Send a Request on DMA HW Req output line 3 4 : Send a Request on DMA HW Req output line 4 5 : Send a Request on DMA HW Req output line 5 6 : Send a Request on DMA HW Req output line 6 7 : Do not generate dma trigger
15	NU2	R	Bh	
14-8	LL5_WR_THRESHOLD	R/W	0h	Configure the CBUFF FIFO Write threshold over which CBUFF will stall the DMA write to the CBUFF. Static configuration. This can be programmed to fixed value mentioned in the Programming Model
7	NU1	R	Bh	
6-0	LL5_RD_THRESHOLD	R/W	0h	Configure the CBUFF Read threshold to be Reached before sending the data over CSI2/LVDS and start draining the CBUFF FIFO. Static configuration. This can be programmed to fixed value mentioned in the Programming Model

Copyright © 2025 Texas Instruments Incorporated

11.2.2.3.1.30 CFG_DATA_LL6 Register (Offset = 78h) [Reset = 00000000h]

CFG_DATA_LL6 is shown in Table 11-778.

Return to the Summary Table.

Table 11-778. CFG_DATA_LL6 Register Field Descriptions

Bit	Field	Type	Reset	Description
31	LL6_DATA_WR_DELAY_EN	R/W	0h	TI Internal Feature CSI2 only Programming : Use the Packet Delay configured in CFG_DELAY_CONFIG. This is a Debug feature. Not requred in Programming model
30	LL6_LONG_PKT_DELAY_EN	R/W	0h	TI Internal Feature CSI2 only Programming : Use the Packet Delay configured in CFG_DELAY_CONFIG. This is a Debug feature. Not requred in Programming model
29	LL6_SHORT_PKT_DELAY_EN	R/W	0h	TI Internal Feature CSI2 only Programming : Use the Packet Delay configured in CFG_DELAY_CONFIG. This is a Debug feature. Not requred in Programming model
28	LL6_CRC_EN	R/W	0h	0 : CRC is disbaled 1 : This linklist corresponds to ADC Buffer data. Enable the CRC check from ADC Buffer to CBUFF
27	LL6_LPHDR_EN	R/W	0h	CSI2 Programming : 1 : Entry is start of a new CSI-2 packet. Send the LP Payload Header before sending data corresponind to this Linklist 0 : Link list is not the start of a Long packet but part of previous packet and hence directly send data LVDS Programming : 1 : Entry is start of a new LVDS Frame 0 : Entry is not the start of the new LVDS Frame
26	LL6_WAITFOR_PKTSENT	R/W	0h	TI Internal Feature Reserved for furture debug enhancement 1 : Wait for packet sent signal ack from CSI2 to move forward 0 : Do not wait for packet sent
25-23	LL6_BITPOS_SEL	R/W	0h	TI Internal Feature. Reserved for future use to select which of the 12-bits or 14-bits to be picked up from 16-bit CBUFF unit
22-9	LL6_SIZE	R/W	0h	Configure the Size of the data in terms of the numer of samples (not in terms of number of bytes). Sample refers to a 16 bit CBUFF Unit
8	LL6_FMT_IN	R/W	0h	0 : The incoming data sources for this Linklist is aligned to 128-bit 1 : The incoming data sources for this Linklist is aligned to 96-bit
7	LL6_FMT_MAP	R/W	0h	LVDS only : 0 : Choose CFG_LVDS_MAPPING_LANEx_FMT_0_y 1 : Choose CFG_LVDS_MAPPING_LANEx_FMT_1_y
6-5	LL6_FMT	R/W	0h	Specify the LVDS/CSI2 output format. 00 - 16bit 01 - 14-bit 10 - 12-bit
4-3	LL6_VCNUM	R/W	0h	CSI-2 : Configure the Virtual Channel Number for the Long Packet over which this data is sent
2	LL6_HS	R/W	0h	CSI-2 : 0 : Do not send an Hsync Start packet before sending this data 1 : Send an Hsync Start Packet before sending this data LVDS : 0 : Entry is not the first data of LVDS Frame 1 : Entry is the first data in the LVDS Frame
1	LL6_HE	R/W	0h	CSI-2 : 0 : Do not send an Hsync End packet after sending this data 1 : Send an Hsync End Packet after sending this data LVDS : 0 : Entry is not the last data of LVDS Frame 1 : Entry is the last data in the LVDS Frame
0	LL6_VALID	R/W	0h	0 : Linklist entry is invalid 1 : Linklist entry is valid

Copyright © 2025 Texas Instruments Incorporated

11.2.2.3.1.31 CFG_DATA_LL6_LPHDR_VAL Register (Offset = 7Ch) [Reset = 00000000h]

CFG_DATA_LL6_LPHDR_VAL is shown in Table 11-779.

Return to the Summary Table.

Table 11-779. CFG_DATA_LL6_LPHDR_VAL Register Field Descriptions

Bit	Field	Type	Reset	Description
31-0	LL6_LPHDR_VAL	R/W	0h	CSI-2 Programming : Configure the Long Packet Header to be sent to the Protocol Engine if the LPHDR_EN field is set for the linklist. LVDS Programming : Configure with the static value : 0xBBBBBBBB

Copyright © 2025 Texas Instruments Incorporated

11.2.2.3.1.32 CFG_DATA_LL6_THRESHOLD Register (Offset = 80h) [Reset = 0000X0X0h]

CFG_DATA_LL6_THRESHOLD is shown in Table 11-780.

Return to the Summary Table.

Table 11-780. CFG_DATA_LL6_THRESHOLD Register Field Descriptions

Bit	Field	Type	Reset	Description
31-19	NU3	R	0h	
18-16	ll6dman	R/W	0h	If the long Packet Header is enabled, CBUFF can generate a DMA request to trigger the DMA trasnfer for the new packet 0 : Send a Request on DMA HW Req output line 0 1 : Send a Request on DMA HW Req output line 1 2 : Send a Request on DMA HW Req output line 2 3 : Send a Request on DMA HW Req output line 3 4 : Send a Request on DMA HW Req output line 4 5 : Send a Request on DMA HW Req output line 5 6 : Send a Request on DMA HW Req output line 6 7 : Do not generate dma trigger
15	NU2	R	Bh	
14-8	LL6_WR_THRESHOLD	R/W	0h	Configure the CBUFF FIFO Write threshold over which CBUFF will stall the DMA write to the CBUFF. Static configuration. This can be programmed to fixed value mentioned in the Programming Model
7	NU1	R	Bh	
6-0	LL6_RD_THRESHOLD	R/W	0h	Configure the CBUFF Read threshold to be Reached before sending the data over CSI2/LVDS and start draining the CBUFF FIFO. Static configuration. This can be programmed to fixed value mentioned in the Programming Model

Copyright © 2025 Texas Instruments Incorporated

11.2.2.3.1.33 CFG_DATA_LL7 Register (Offset = 84h) [Reset = 00000000h]

CFG_DATA_LL7 is shown in Table 11-781.

Return to the Summary Table.

Table 11-781. CFG_DATA_LL7 Register Field Descriptions

Bit	Field	Type	Reset	Description
31	LL7_DATA_WR_DELAY_EN	R/W	0h	TI Internal Feature CSI2 only Programming : Use the Packet Delay configured in CFG_DELAY_CONFIG. This is a Debug feature. Not requred in Programming model
30	LL7_LONG_PKT_DELAY_EN	R/W	0h	TI Internal Feature CSI2 only Programming : Use the Packet Delay configured in CFG_DELAY_CONFIG. This is a Debug feature. Not requred in Programming model
29	LL7_SHORT_PKT_DELAY_EN	R/W	0h	TI Internal Feature CSI2 only Programming : Use the Packet Delay configured in CFG_DELAY_CONFIG. This is a Debug feature. Not requred in Programming model
28	LL7_CRC_EN	R/W	0h	0 : CRC is disbaled 1 : This linklist corresponds to ADC Buffer data. Enable the CRC check from ADC Buffer to CBUFF
27	LL7_LPHDR_EN	R/W	0h	CSI2 Programming : 1 : Entry is start of a new CSI-2 packet. Send the LP Payload Header before sending data corresponind to this Linklist 0 : Link list is not the start of a Long packet but part of previous packet and hence directly send data LVDS Programming : 1 : Entry is start of a new LVDS Frame 0 : Entry is not the start of the new LVDS Frame
26	LL7_WAITFOR_PKTSENT	R/W	0h	TI Internal Feature Reserved for furture debug enhancement 1 : Wait for packet sent signal ack from CSI2 to move forward 0 : Do not wait for packet sent
25-23	LL7_BITPOS_SEL	R/W	0h	TI Internal Feature. Reserved for future use to select which of the 12-bits or 14-bits to be picked up from 16-bit CBUFF unit
22-9	LL7_SIZE	R/W	0h	Configure the Size of the data in terms of the numer of samples (not in terms of number of bytes). Sample refers to a 16 bit CBUFF Unit
8	LL7_FMT_IN	R/W	0h	0 : The incoming data sources for this Linklist is aligned to 128-bit 1 : The incoming data sources for this Linklist is aligned to 96-bit
7	LL7_FMT_MAP	R/W	0h	LVDS only : 0 : Choose CFG_LVDS_MAPPING_LANEx_FMT_0_y 1 : Choose CFG_LVDS_MAPPING_LANEx_FMT_1_y
6-5	LL7_FMT	R/W	0h	Specify the LVDS/CSI2 output format. 00 - 16bit 01 - 14-bit 10 - 12-bit
4-3	LL7_VCNUM	R/W	0h	CSI-2 : Configure the Virtual Channel Number for the Long Packet over which this data is sent
2	LL7_HS	R/W	0h	CSI-2 : 0 : Do not send an Hsync Start packet before sending this data 1 : Send an Hsync Start Packet before sending this data LVDS : 0 : Entry is not the first data of LVDS Frame 1 : Entry is the first data in the LVDS Frame
1	LL7_HE	R/W	0h	CSI-2 : 0 : Do not send an Hsync End packet after sending this data 1 : Send an Hsync End Packet after sending this data LVDS : 0 : Entry is not the last data of LVDS Frame 1 : Entry is the last data in the LVDS Frame
0	LL7_VALID	R/W	0h	0 : Linklist entry is invalid 1 : Linklist entry is valid

Copyright © 2025 Texas Instruments Incorporated

11.2.2.3.1.34 CFG_DATA_LL7_LPHDR_VAL Register (Offset = 88h) [Reset = 00000000h]

CFG_DATA_LL7_LPHDR_VAL is shown in Table 11-782.

Return to the Summary Table.

Table 11-782. CFG_DATA_LL7_LPHDR_VAL Register Field Descriptions

Bit	Field	Type	Reset	Description
31-0	LL7_LPHDR_VAL	R/W	0h	CSI-2 Programming : Configure the Long Packet Header to be sent to the Protocol Engine if the LPHDR_EN field is set for the linklist. LVDS Programming : Configure with the static value : 0xBBBBBBBB

Copyright © 2025 Texas Instruments Incorporated

11.2.2.3.1.35 CFG_DATA_LL7_THRESHOLD Register (Offset = 8Ch) [Reset = 0000X0X0h]

CFG_DATA_LL7_THRESHOLD is shown in Table 11-783.

Return to the Summary Table.

Table 11-783. CFG_DATA_LL7_THRESHOLD Register Field Descriptions

Bit	Field	Type	Reset	Description
31-19	NU3	R	0h	
18-16	ll7dman	R/W	0h	If the long Packet Header is enabled, CBUFF can generate a DMA request to trigger the DMA trasnfer for the new packet 0 : Send a Request on DMA HW Req output line 0 1 : Send a Request on DMA HW Req output line 1 2 : Send a Request on DMA HW Req output line 2 3 : Send a Request on DMA HW Req output line 3 4 : Send a Request on DMA HW Req output line 4 5 : Send a Request on DMA HW Req output line 5 6 : Send a Request on DMA HW Req output line 6 7 : Do not generate dma trigger
15	NU2	R	Bh	
14-8	LL7_WR_THRESHOLD	R/W	0h	Configure the CBUFF FIFO Write threshold over which CBUFF will stall the DMA write to the CBUFF. Static configuration. This can be programmed to fixed value mentioned in the Programming Model
7	NU1	R	Bh	
6-0	LL7_RD_THRESHOLD	R/W	0h	Configure the CBUFF Read threshold to be Reached before sending the data over CSI2/LVDS and start draining the CBUFF FIFO. Static configuration. This can be programmed to fixed value mentioned in the Programming Model

Copyright © 2025 Texas Instruments Incorporated

11.2.2.3.1.36 CFG_DATA_LL8 Register (Offset = 90h) [Reset = 00000000h]

CFG_DATA_LL8 is shown in Table 11-784.

Return to the Summary Table.

Table 11-784. CFG_DATA_LL8 Register Field Descriptions

Bit	Field	Type	Reset	Description
31	LL8_DATA_WR_DELAY_EN	R/W	0h	TI Internal Feature CSI2 only Programming : Use the Packet Delay configured in CFG_DELAY_CONFIG. This is a Debug feature. Not requred in Programming model
30	LL8_LONG_PKT_DELAY_EN	R/W	0h	TI Internal Feature CSI2 only Programming : Use the Packet Delay configured in CFG_DELAY_CONFIG. This is a Debug feature. Not requred in Programming model
29	LL8_SHORT_PKT_DELAY_EN	R/W	0h	TI Internal Feature CSI2 only Programming : Use the Packet Delay configured in CFG_DELAY_CONFIG. This is a Debug feature. Not requred in Programming model
28	LL8_CRC_EN	R/W	0h	0 : CRC is disbaled 1 : This linklist corresponds to ADC Buffer data. Enable the CRC check from ADC Buffer to CBUFF
27	LL8_LPHDR_EN	R/W	0h	CSI2 Programming : 1 : Entry is start of a new CSI-2 packet. Send the LP Payload Header before sending data corresponind to this Linklist 0 : Link list is not the start of a Long packet but part of previous packet and hence directly send data LVDS Programming : 1 : Entry is start of a new LVDS Frame 0 : Entry is not the start of the new LVDS Frame
26	LL8_WAITFOR_PKTSENT	R/W	0h	TI Internal Feature Reserved for furture debug enhancement 1 : Wait for packet sent signal ack from CSI2 to move forward 0 : Do not wait for packet sent
25-23	LL8_BITPOS_SEL	R/W	0h	TI Internal Feature. Reserved for future use to select which of the 12-bits or 14-bits to be picked up from 16-bit CBUFF unit
22-9	LL8_SIZE	R/W	0h	Configure the Size of the data in terms of the numer of samples (not in terms of number of bytes). Sample refers to a 16 bit CBUFF Unit
8	LL8_FMT_IN	R/W	0h	0 : The incoming data sources for this Linklist is aligned to 128-bit 1 : The incoming data sources for this Linklist is aligned to 96-bit
7	LL8_FMT_MAP	R/W	0h	LVDS only : 0 : Choose CFG_LVDS_MAPPING_LANEx_FMT_0_y 1 : Choose CFG_LVDS_MAPPING_LANEx_FMT_1_y
6-5	LL8_FMT	R/W	0h	Specify the LVDS/CSI2 output format. 00 - 16bit 01 - 14-bit 10 - 12-bit
4-3	LL8_VCNUM	R/W	0h	CSI-2 : Configure the Virtual Channel Number for the Long Packet over which this data is sent
2	LL8_HS	R/W	0h	CSI-2 : 0 : Do not send an Hsync Start packet before sending this data 1 : Send an Hsync Start Packet before sending this data LVDS : 0 : Entry is not the first data of LVDS Frame 1 : Entry is the first data in the LVDS Frame
1	LL8_HE	R/W	0h	CSI-2 : 0 : Do not send an Hsync End packet after sending this data 1 : Send an Hsync End Packet after sending this data LVDS : 0 : Entry is not the last data of LVDS Frame 1 : Entry is the last data in the LVDS Frame
0	LL8_VALID	R/W	0h	0 : Linklist entry is invalid 1 : Linklist entry is valid

Copyright © 2025 Texas Instruments Incorporated

11.2.2.3.1.37 CFG_DATA_LL8_LPHDR_VAL Register (Offset = 94h) [Reset = 00000000h]

CFG_DATA_LL8_LPHDR_VAL is shown in Table 11-785.

Return to the Summary Table.

Table 11-785. CFG_DATA_LL8_LPHDR_VAL Register Field Descriptions

Bit	Field	Type	Reset	Description
31-0	LL8_LPHDR_VAL	R/W	0h	CSI-2 Programming : Configure the Long Packet Header to be sent to the Protocol Engine if the LPHDR_EN field is set for the linklist. LVDS Programming : Configure with the static value : 0xBBBBBBBB

Copyright © 2025 Texas Instruments Incorporated

11.2.2.3.1.38 CFG_DATA_LL8_THRESHOLD Register (Offset = 98h) [Reset = 0000X0X0h]

CFG_DATA_LL8_THRESHOLD is shown in Table 11-786.

Return to the Summary Table.

Table 11-786. CFG_DATA_LL8_THRESHOLD Register Field Descriptions

Bit	Field	Type	Reset	Description
31-19	NU3	R	0h	
18-16	ll8dman	R/W	0h	If the long Packet Header is enabled, CBUFF can generate a DMA request to trigger the DMA trasnfer for the new packet 0 : Send a Request on DMA HW Req output line 0 1 : Send a Request on DMA HW Req output line 1 2 : Send a Request on DMA HW Req output line 2 3 : Send a Request on DMA HW Req output line 3 4 : Send a Request on DMA HW Req output line 4 5 : Send a Request on DMA HW Req output line 5 6 : Send a Request on DMA HW Req output line 6 7 : Do not generate dma trigger
15	NU2	R	Bh	
14-8	LL8_WR_THRESHOLD	R/W	0h	Configure the CBUFF FIFO Write threshold over which CBUFF will stall the DMA write to the CBUFF. Static configuration. This can be programmed to fixed value mentioned in the Programming Model
7	NU1	R	Bh	
6-0	LL8_RD_THRESHOLD	R/W	0h	Configure the CBUFF Read threshold to be Reached before sending the data over CSI2/LVDS and start draining the CBUFF FIFO. Static configuration. This can be programmed to fixed value mentioned in the Programming Model

Copyright © 2025 Texas Instruments Incorporated

11.2.2.3.1.39 CFG_DATA_LL9 Register (Offset = 9Ch) [Reset = 00000000h]

CFG_DATA_LL9 is shown in Table 11-787.

Return to the Summary Table.

Table 11-787. CFG_DATA_LL9 Register Field Descriptions

Bit	Field	Type	Reset	Description
31	LL9_DATA_WR_DELAY_EN	R/W	0h	TI Internal Feature CSI2 only Programming : Use the Packet Delay configured in CFG_DELAY_CONFIG. This is a Debug feature. Not requred in Programming model
30	LL9_LONG_PKT_DELAY_EN	R/W	0h	TI Internal Feature CSI2 only Programming : Use the Packet Delay configured in CFG_DELAY_CONFIG. This is a Debug feature. Not requred in Programming model
29	LL9_SHORT_PKT_DELAY_EN	R/W	0h	TI Internal Feature CSI2 only Programming : Use the Packet Delay configured in CFG_DELAY_CONFIG. This is a Debug feature. Not requred in Programming model
28	LL9_CRC_EN	R/W	0h	0 : CRC is disbaled 1 : This linklist corresponds to ADC Buffer data. Enable the CRC check from ADC Buffer to CBUFF
27	LL9_LPHDR_EN	R/W	0h	CSI2 Programming : 1 : Entry is start of a new CSI-2 packet. Send the LP Payload Header before sending data corresponind to this Linklist 0 : Link list is not the start of a Long packet but part of previous packet and hence directly send data LVDS Programming : 1 : Entry is start of a new LVDS Frame 0 : Entry is not the start of the new LVDS Frame
26	LL9_WAITFOR_PKTSENT	R/W	0h	TI Internal Feature Reserved for furture debug enhancement 1 : Wait for packet sent signal ack from CSI2 to move forward 0 : Do not wait for packet sent
25-23	LL9_BITPOS_SEL	R/W	0h	TI Internal Feature. Reserved for future use to select which of the 12-bits or 14-bits to be picked up from 16-bit CBUFF unit
22-9	LL9_SIZE	R/W	0h	Configure the Size of the data in terms of the numer of samples (not in terms of number of bytes). Sample refers to a 16 bit CBUFF Unit
8	LL9_FMT_IN	R/W	0h	0 : The incoming data sources for this Linklist is aligned to 128-bit 1 : The incoming data sources for this Linklist is aligned to 96-bit
7	LL9_FMT_MAP	R/W	0h	LVDS only : 0 : Choose CFG_LVDS_MAPPING_LANEx_FMT_0_y 1 : Choose CFG_LVDS_MAPPING_LANEx_FMT_1_y
6-5	LL9_FMT	R/W	0h	Specify the LVDS/CSI2 output format. 00 - 16bit 01 - 14-bit 10 - 12-bit
4-3	LL9_VCNUM	R/W	0h	CSI-2 : Configure the Virtual Channel Number for the Long Packet over which this data is sent
2	LL9_HS	R/W	0h	CSI-2 : 0 : Do not send an Hsync Start packet before sending this data 1 : Send an Hsync Start Packet before sending this data LVDS : 0 : Entry is not the first data of LVDS Frame 1 : Entry is the first data in the LVDS Frame
1	LL9_HE	R/W	0h	CSI-2 : 0 : Do not send an Hsync End packet after sending this data 1 : Send an Hsync End Packet after sending this data LVDS : 0 : Entry is not the last data of LVDS Frame 1 : Entry is the last data in the LVDS Frame
0	LL9_VALID	R/W	0h	0 : Linklist entry is invalid 1 : Linklist entry is valid

Copyright © 2025 Texas Instruments Incorporated

11.2.2.3.1.40 CFG_DATA_LL9_LPHDR_VAL Register (Offset = A0h) [Reset = 00000000h]

CFG_DATA_LL9_LPHDR_VAL is shown in Table 11-788.

Return to the Summary Table.

Table 11-788. CFG_DATA_LL9_LPHDR_VAL Register Field Descriptions

Bit	Field	Type	Reset	Description
31-0	LL9_LPHDR_VAL	R/W	0h	CSI-2 Programming : Configure the Long Packet Header to be sent to the Protocol Engine if the LPHDR_EN field is set for the linklist. LVDS Programming : Configure with the static value : 0xBBBBBBBB

Copyright © 2025 Texas Instruments Incorporated

11.2.2.3.1.41 CFG_DATA_LL9_THRESHOLD Register (Offset = A4h) [Reset = 0000X0X0h]

CFG_DATA_LL9_THRESHOLD is shown in Table 11-789.

Return to the Summary Table.

Table 11-789. CFG_DATA_LL9_THRESHOLD Register Field Descriptions

Bit	Field	Type	Reset	Description
31-19	NU3	R	0h	
18-16	ll9dman	R/W	0h	If the long Packet Header is enabled, CBUFF can generate a DMA request to trigger the DMA trasnfer for the new packet 0 : Send a Request on DMA HW Req output line 0 1 : Send a Request on DMA HW Req output line 1 2 : Send a Request on DMA HW Req output line 2 3 : Send a Request on DMA HW Req output line 3 4 : Send a Request on DMA HW Req output line 4 5 : Send a Request on DMA HW Req output line 5 6 : Send a Request on DMA HW Req output line 6 7 : Do not generate dma trigger
15	NU2	R	Bh	
14-8	LL9_WR_THRESHOLD	R/W	0h	Configure the CBUFF FIFO Write threshold over which CBUFF will stall the DMA write to the CBUFF. Static configuration. This can be programmed to fixed value mentioned in the Programming Model
7	NU1	R	Bh	
6-0	LL9_RD_THRESHOLD	R/W	0h	Configure the CBUFF Read threshold to be Reached before sending the data over CSI2/LVDS and start draining the CBUFF FIFO. Static configuration. This can be programmed to fixed value mentioned in the Programming Model

Copyright © 2025 Texas Instruments Incorporated

11.2.2.3.1.42 CFG_DATA_LL10 Register (Offset = A8h) [Reset = 00000000h]

CFG_DATA_LL10 is shown in Table 11-790.

Return to the Summary Table.

Table 11-790. CFG_DATA_LL10 Register Field Descriptions

Bit	Field	Type	Reset	Description
31	LL10_DATA_WR_DELAY_EN	R/W	0h	TI Internal Feature CSI2 only Programming : Use the Packet Delay configured in CFG_DELAY_CONFIG. This is a Debug feature. Not requred in Programming model
30	LL10_LONG_PKT_DELAY_EN	R/W	0h	TI Internal Feature CSI2 only Programming : Use the Packet Delay configured in CFG_DELAY_CONFIG. This is a Debug feature. Not requred in Programming model
29	LL10_SHORT_PKT_DELAY_EN	R/W	0h	TI Internal Feature CSI2 only Programming : Use the Packet Delay configured in CFG_DELAY_CONFIG. This is a Debug feature. Not requred in Programming model
28	LL10_CRC_EN	R/W	0h	0 : CRC is disbaled 1 : This linklist corresponds to ADC Buffer data. Enable the CRC check from ADC Buffer to CBUFF
27	LL10_LPHDR_EN	R/W	0h	CSI2 Programming : 1 : Entry is start of a new CSI-2 packet. Send the LP Payload Header before sending data corresponind to this Linklist 0 : Link list is not the start of a Long packet but part of previous packet and hence directly send data LVDS Programming : 1 : Entry is start of a new LVDS Frame 0 : Entry is not the start of the new LVDS Frame
26	LL10_WAITFOR_PKTSENT	R/W	0h	TI Internal Feature Reserved for furture debug enhancement 1 : Wait for packet sent signal ack from CSI2 to move forward 0 : Do not wait for packet sent
25-23	LL10_BITPOS_SEL	R/W	0h	TI Internal Feature. Reserved for future use to select which of the 12-bits or 14-bits to be picked up from 16-bit CBUFF unit
22-9	LL10_SIZE	R/W	0h	Configure the Size of the data in terms of the numer of samples (not in terms of number of bytes). Sample refers to a 16 bit CBUFF Unit
8	LL10_FMT_IN	R/W	0h	0 : The incoming data sources for this Linklist is aligned to 128-bit 1 : The incoming data sources for this Linklist is aligned to 96-bit
7	LL10_FMT_MAP	R/W	0h	LVDS only : 0 : Choose CFG_LVDS_MAPPING_LANEx_FMT_0_y 1 : Choose CFG_LVDS_MAPPING_LANEx_FMT_1_y
6-5	LL10_FMT	R/W	0h	Specify the LVDS/CSI2 output format. 00 - 16bit 01 - 14-bit 10 - 12-bit
4-3	LL10_VCNUM	R/W	0h	CSI-2 : Configure the Virtual Channel Number for the Long Packet over which this data is sent
2	LL10_HS	R/W	0h	CSI-2 : 0 : Do not send an Hsync Start packet before sending this data 1 : Send an Hsync Start Packet before sending this data LVDS : 0 : Entry is not the first data of LVDS Frame 1 : Entry is the first data in the LVDS Frame
1	LL10_HE	R/W	0h	CSI-2 : 0 : Do not send an Hsync End packet after sending this data 1 : Send an Hsync End Packet after sending this data LVDS : 0 : Entry is not the last data of LVDS Frame 1 : Entry is the last data in the LVDS Frame
0	LL10_VALID	R/W	0h	0 : Linklist entry is invalid 1 : Linklist entry is valid

Copyright © 2025 Texas Instruments Incorporated

11.2.2.3.1.43 CFG_DATA_LL10_LPHDR_VAL Register (Offset = ACh) [Reset = 00000000h]

CFG_DATA_LL10_LPHDR_VAL is shown in Table 11-791.

Return to the Summary Table.

Table 11-791. CFG_DATA_LL10_LPHDR_VAL Register Field Descriptions

Bit	Field	Type	Reset	Description
31-0	LL10_LPHDR_VAL	R/W	0h	CSI-2 Programming : Configure the Long Packet Header to be sent to the Protocol Engine if the LPHDR_EN field is set for the linklist. LVDS Programming : Configure with the static value : 0xBBBBBBBB

Copyright © 2025 Texas Instruments Incorporated

11.2.2.3.1.44 CFG_DATA_LL10_THRESHOLD Register (Offset = B0h) [Reset = 0000X0X0h]

CFG_DATA_LL10_THRESHOLD is shown in Table 11-792.

Return to the Summary Table.

Table 11-792. CFG_DATA_LL10_THRESHOLD Register Field Descriptions

Bit	Field	Type	Reset	Description
31-19	NU3	R	0h	
18-16	ll10dman	R/W	0h	If the long Packet Header is enabled, CBUFF can generate a DMA request to trigger the DMA trasnfer for the new packet 0 : Send a Request on DMA HW Req output line 0 1 : Send a Request on DMA HW Req output line 1 2 : Send a Request on DMA HW Req output line 2 3 : Send a Request on DMA HW Req output line 3 4 : Send a Request on DMA HW Req output line 4 5 : Send a Request on DMA HW Req output line 5 6 : Send a Request on DMA HW Req output line 6 7 : Do not generate dma trigger
15	NU2	R	Bh	
14-8	LL10_WR_THRESHOLD	R/W	0h	Configure the CBUFF FIFO Write threshold over which CBUFF will stall the DMA write to the CBUFF. Static configuration. This can be programmed to fixed value mentioned in the Programming Model
7	NU1	R	Bh	
6-0	LL10_RD_THRESHOLD	R/W	0h	Configure the CBUFF Read threshold to be Reached before sending the data over CSI2/LVDS and start draining the CBUFF FIFO. Static configuration. This can be programmed to fixed value mentioned in the Programming Model

Copyright © 2025 Texas Instruments Incorporated

11.2.2.3.1.45 CFG_DATA_LL11 Register (Offset = B4h) [Reset = 00000000h]

CFG_DATA_LL11 is shown in Table 11-793.

Return to the Summary Table.

Table 11-793. CFG_DATA_LL11 Register Field Descriptions

Bit	Field	Type	Reset	Description
31	LL11_DATA_WR_DELAY_EN	R/W	0h	TI Internal Feature CSI2 only Programming : Use the Packet Delay configured in CFG_DELAY_CONFIG. This is a Debug feature. Not requred in Programming model
30	LL11_LONG_PKT_DELAY_EN	R/W	0h	TI Internal Feature CSI2 only Programming : Use the Packet Delay configured in CFG_DELAY_CONFIG. This is a Debug feature. Not requred in Programming model
29	LL11_SHORT_PKT_DELAY_EN	R/W	0h	TI Internal Feature CSI2 only Programming : Use the Packet Delay configured in CFG_DELAY_CONFIG. This is a Debug feature. Not requred in Programming model
28	LL11_CRC_EN	R/W	0h	0 : CRC is disbaled 1 : This linklist corresponds to ADC Buffer data. Enable the CRC check from ADC Buffer to CBUFF
27	LL11_LPHDR_EN	R/W	0h	CSI2 Programming : 1 : Entry is start of a new CSI-2 packet. Send the LP Payload Header before sending data corresponind to this Linklist 0 : Link list is not the start of a Long packet but part of previous packet and hence directly send data LVDS Programming : 1 : Entry is start of a new LVDS Frame 0 : Entry is not the start of the new LVDS Frame
26	LL11_WAITFOR_PKTSENT	R/W	0h	TI Internal Feature Reserved for furture debug enhancement 1 : Wait for packet sent signal ack from CSI2 to move forward 0 : Do not wait for packet sent
25-23	LL11_BITPOS_SEL	R/W	0h	TI Internal Feature. Reserved for future use to select which of the 12-bits or 14-bits to be picked up from 16-bit CBUFF unit
22-9	LL11_SIZE	R/W	0h	Configure the Size of the data in terms of the numer of samples (not in terms of number of bytes). Sample refers to a 16 bit CBUFF Unit
8	LL11_FMT_IN	R/W	0h	0 : The incoming data sources for this Linklist is aligned to 128-bit 1 : The incoming data sources for this Linklist is aligned to 96-bit
7	LL11_FMT_MAP	R/W	0h	LVDS only : 0 : Choose CFG_LVDS_MAPPING_LANEx_FMT_0_y 1 : Choose CFG_LVDS_MAPPING_LANEx_FMT_1_y
6-5	LL11_FMT	R/W	0h	Specify the LVDS/CSI2 output format. 00 - 16bit 01 - 14-bit 10 - 12-bit
4-3	LL11_VCNUM	R/W	0h	CSI-2 : Configure the Virtual Channel Number for the Long Packet over which this data is sent
2	LL11_HS	R/W	0h	CSI-2 : 0 : Do not send an Hsync Start packet before sending this data 1 : Send an Hsync Start Packet before sending this data LVDS : 0 : Entry is not the first data of LVDS Frame 1 : Entry is the first data in the LVDS Frame
1	LL11_HE	R/W	0h	CSI-2 : 0 : Do not send an Hsync End packet after sending this data 1 : Send an Hsync End Packet after sending this data LVDS : 0 : Entry is not the last data of LVDS Frame 1 : Entry is the last data in the LVDS Frame
0	LL11_VALID	R/W	0h	0 : Linklist entry is invalid 1 : Linklist entry is valid

Copyright © 2025 Texas Instruments Incorporated

11.2.2.3.1.46 CFG_DATA_LL11_LPHDR_VAL Register (Offset = B8h) [Reset = 00000000h]

CFG_DATA_LL11_LPHDR_VAL is shown in Table 11-794.

Return to the Summary Table.

Table 11-794. CFG_DATA_LL11_LPHDR_VAL Register Field Descriptions

Bit	Field	Type	Reset	Description
31-0	LL11_LPHDR_VAL	R/W	0h	CSI-2 Programming : Configure the Long Packet Header to be sent to the Protocol Engine if the LPHDR_EN field is set for the linklist. LVDS Programming : Configure with the static value : 0xBBBBBBBB

Copyright © 2025 Texas Instruments Incorporated

11.2.2.3.1.47 CFG_DATA_LL11_THRESHOLD Register (Offset = BCh) [Reset = 0000X0X0h]

CFG_DATA_LL11_THRESHOLD is shown in Table 11-795.

Return to the Summary Table.

Table 11-795. CFG_DATA_LL11_THRESHOLD Register Field Descriptions

Bit	Field	Type	Reset	Description
31-19	NU3	R	0h	
18-16	ll11dman	R/W	0h	If the long Packet Header is enabled, CBUFF can generate a DMA request to trigger the DMA trasnfer for the new packet 0 : Send a Request on DMA HW Req output line 0 1 : Send a Request on DMA HW Req output line 1 2 : Send a Request on DMA HW Req output line 2 3 : Send a Request on DMA HW Req output line 3 4 : Send a Request on DMA HW Req output line 4 5 : Send a Request on DMA HW Req output line 5 6 : Send a Request on DMA HW Req output line 6 7 : Do not generate dma trigger
15	NU2	R	Bh	
14-8	LL11_WR_THRESHOLD	R/W	0h	Configure the CBUFF FIFO Write threshold over which CBUFF will stall the DMA write to the CBUFF. Static configuration. This can be programmed to fixed value mentioned in the Programming Model
7	NU1	R	Bh	
6-0	LL11_RD_THRESHOLD	R/W	0h	Configure the CBUFF Read threshold to be Reached before sending the data over CSI2/LVDS and start draining the CBUFF FIFO. Static configuration. This can be programmed to fixed value mentioned in the Programming Model

Copyright © 2025 Texas Instruments Incorporated

11.2.2.3.1.48 CFG_DATA_LL12 Register (Offset = C0h) [Reset = 00000000h]

CFG_DATA_LL12 is shown in Table 11-796.

Return to the Summary Table.

Table 11-796. CFG_DATA_LL12 Register Field Descriptions

Bit	Field	Type	Reset	Description
31	LL12_DATA_WR_DELAY_EN	R/W	0h	TI Internal Feature CSI2 only Programming : Use the Packet Delay configured in CFG_DELAY_CONFIG. This is a Debug feature. Not requred in Programming model
30	LL12_LONG_PKT_DELAY_EN	R/W	0h	TI Internal Feature CSI2 only Programming : Use the Packet Delay configured in CFG_DELAY_CONFIG. This is a Debug feature. Not requred in Programming model
29	LL12_SHORT_PKT_DELAY_EN	R/W	0h	TI Internal Feature CSI2 only Programming : Use the Packet Delay configured in CFG_DELAY_CONFIG. This is a Debug feature. Not requred in Programming model
28	LL12_CRC_EN	R/W	0h	0 : CRC is disbaled 1 : This linklist corresponds to ADC Buffer data. Enable the CRC check from ADC Buffer to CBUFF
27	LL12_LPHDR_EN	R/W	0h	CSI2 Programming : 1 : Entry is start of a new CSI-2 packet. Send the LP Payload Header before sending data corresponind to this Linklist 0 : Link list is not the start of a Long packet but part of previous packet and hence directly send data LVDS Programming : 1 : Entry is start of a new LVDS Frame 0 : Entry is not the start of the new LVDS Frame
26	LL12_WAITFOR_PKTSENT	R/W	0h	TI Internal Feature Reserved for furture debug enhancement 1 : Wait for packet sent signal ack from CSI2 to move forward 0 : Do not wait for packet sent
25-23	LL12_BITPOS_SEL	R/W	0h	TI Internal Feature. Reserved for future use to select which of the 12-bits or 14-bits to be picked up from 16-bit CBUFF unit
22-9	LL12_SIZE	R/W	0h	Configure the Size of the data in terms of the numer of samples (not in terms of number of bytes). Sample refers to a 16 bit CBUFF Unit
8	LL12_FMT_IN	R/W	0h	0 : The incoming data sources for this Linklist is aligned to 128-bit 1 : The incoming data sources for this Linklist is aligned to 96-bit
7	LL12_FMT_MAP	R/W	0h	LVDS only : 0 : Choose CFG_LVDS_MAPPING_LANEx_FMT_0_y 1 : Choose CFG_LVDS_MAPPING_LANEx_FMT_1_y
6-5	LL12_FMT	R/W	0h	Specify the LVDS/CSI2 output format. 00 - 16bit 01 - 14-bit 10 - 12-bit
4-3	LL12_VCNUM	R/W	0h	CSI-2 : Configure the Virtual Channel Number for the Long Packet over which this data is sent
2	LL12_HS	R/W	0h	CSI-2 : 0 : Do not send an Hsync Start packet before sending this data 1 : Send an Hsync Start Packet before sending this data LVDS : 0 : Entry is not the first data of LVDS Frame 1 : Entry is the first data in the LVDS Frame
1	LL12_HE	R/W	0h	CSI-2 : 0 : Do not send an Hsync End packet after sending this data 1 : Send an Hsync End Packet after sending this data LVDS : 0 : Entry is not the last data of LVDS Frame 1 : Entry is the last data in the LVDS Frame
0	LL12_VALID	R/W	0h	0 : Linklist entry is invalid 1 : Linklist entry is valid

Copyright © 2025 Texas Instruments Incorporated

11.2.2.3.1.49 CFG_DATA_LL12_LPHDR_VAL Register (Offset = C4h) [Reset = 00000000h]

CFG_DATA_LL12_LPHDR_VAL is shown in Table 11-797.

Return to the Summary Table.

Table 11-797. CFG_DATA_LL12_LPHDR_VAL Register Field Descriptions

Bit	Field	Type	Reset	Description
31-0	LL12_LPHDR_VAL	R/W	0h	CSI-2 Programming : Configure the Long Packet Header to be sent to the Protocol Engine if the LPHDR_EN field is set for the linklist. LVDS Programming : Configure with the static value : 0xBBBBBBBB

Copyright © 2025 Texas Instruments Incorporated

11.2.2.3.1.50 CFG_DATA_LL12_THRESHOLD Register (Offset = C8h) [Reset = 0000X0X0h]

CFG_DATA_LL12_THRESHOLD is shown in Table 11-798.

Return to the Summary Table.

Table 11-798. CFG_DATA_LL12_THRESHOLD Register Field Descriptions

Bit	Field	Type	Reset	Description
31-19	NU3	R	0h	
18-16	ll12dman	R/W	0h	If the long Packet Header is enabled, CBUFF can generate a DMA request to trigger the DMA trasnfer for the new packet 0 : Send a Request on DMA HW Req output line 0 1 : Send a Request on DMA HW Req output line 1 2 : Send a Request on DMA HW Req output line 2 3 : Send a Request on DMA HW Req output line 3 4 : Send a Request on DMA HW Req output line 4 5 : Send a Request on DMA HW Req output line 5 6 : Send a Request on DMA HW Req output line 6 7 : Do not generate dma trigger
15	NU2	R	Bh	
14-8	LL12_WR_THRESHOLD	R/W	0h	Configure the CBUFF FIFO Write threshold over which CBUFF will stall the DMA write to the CBUFF. Static configuration. This can be programmed to fixed value mentioned in the Programming Model
7	NU1	R	Bh	
6-0	LL12_RD_THRESHOLD	R/W	0h	Configure the CBUFF Read threshold to be Reached before sending the data over CSI2/LVDS and start draining the CBUFF FIFO. Static configuration. This can be programmed to fixed value mentioned in the Programming Model

Copyright © 2025 Texas Instruments Incorporated

11.2.2.3.1.51 CFG_DATA_LL13 Register (Offset = CCh) [Reset = 00000000h]

CFG_DATA_LL13 is shown in Table 11-799.

Return to the Summary Table.

Table 11-799. CFG_DATA_LL13 Register Field Descriptions

Bit	Field	Type	Reset	Description
31	LL13_DATA_WR_DELAY_EN	R/W	0h	TI Internal Feature CSI2 only Programming : Use the Packet Delay configured in CFG_DELAY_CONFIG. This is a Debug feature. Not requred in Programming model
30	LL13_LONG_PKT_DELAY_EN	R/W	0h	TI Internal Feature CSI2 only Programming : Use the Packet Delay configured in CFG_DELAY_CONFIG. This is a Debug feature. Not requred in Programming model
29	LL13_SHORT_PKT_DELAY_EN	R/W	0h	TI Internal Feature CSI2 only Programming : Use the Packet Delay configured in CFG_DELAY_CONFIG. This is a Debug feature. Not requred in Programming model
28	LL13_CRC_EN	R/W	0h	0 : CRC is disbaled 1 : This linklist corresponds to ADC Buffer data. Enable the CRC check from ADC Buffer to CBUFF
27	LL13_LPHDR_EN	R/W	0h	CSI2 Programming : 1 : Entry is start of a new CSI-2 packet. Send the LP Payload Header before sending data corresponind to this Linklist 0 : Link list is not the start of a Long packet but part of previous packet and hence directly send data LVDS Programming : 1 : Entry is start of a new LVDS Frame 0 : Entry is not the start of the new LVDS Frame
26	LL13_WAITFOR_PKTSENT	R/W	0h	TI Internal Feature Reserved for furture debug enhancement 1 : Wait for packet sent signal ack from CSI2 to move forward 0 : Do not wait for packet sent
25-23	LL13_BITPOS_SEL	R/W	0h	TI Internal Feature. Reserved for future use to select which of the 12-bits or 14-bits to be picked up from 16-bit CBUFF unit
22-9	LL13_SIZE	R/W	0h	Configure the Size of the data in terms of the numer of samples (not in terms of number of bytes). Sample refers to a 16 bit CBUFF Unit
8	LL13_FMT_IN	R/W	0h	0 : The incoming data sources for this Linklist is aligned to 128-bit 1 : The incoming data sources for this Linklist is aligned to 96-bit
7	LL13_FMT_MAP	R/W	0h	LVDS only : 0 : Choose CFG_LVDS_MAPPING_LANEx_FMT_0_y 1 : Choose CFG_LVDS_MAPPING_LANEx_FMT_1_y
6-5	LL13_FMT	R/W	0h	Specify the LVDS/CSI2 output format. 00 - 16bit 01 - 14-bit 10 - 12-bit
4-3	LL13_VCNUM	R/W	0h	CSI-2 : Configure the Virtual Channel Number for the Long Packet over which this data is sent
2	LL13_HS	R/W	0h	CSI-2 : 0 : Do not send an Hsync Start packet before sending this data 1 : Send an Hsync Start Packet before sending this data LVDS : 0 : Entry is not the first data of LVDS Frame 1 : Entry is the first data in the LVDS Frame
1	LL13_HE	R/W	0h	CSI-2 : 0 : Do not send an Hsync End packet after sending this data 1 : Send an Hsync End Packet after sending this data LVDS : 0 : Entry is not the last data of LVDS Frame 1 : Entry is the last data in the LVDS Frame
0	LL13_VALID	R/W	0h	0 : Linklist entry is invalid 1 : Linklist entry is valid

Copyright © 2025 Texas Instruments Incorporated

11.2.2.3.1.52 CFG_DATA_LL13_LPHDR_VAL Register (Offset = D0h) [Reset = 00000000h]

CFG_DATA_LL13_LPHDR_VAL is shown in Table 11-800.

Return to the Summary Table.

Table 11-800. CFG_DATA_LL13_LPHDR_VAL Register Field Descriptions

Bit	Field	Type	Reset	Description
31-0	LL13_LPHDR_VAL	R/W	0h	CSI-2 Programming : Configure the Long Packet Header to be sent to the Protocol Engine if the LPHDR_EN field is set for the linklist. LVDS Programming : Configure with the static value : 0xBBBBBBBB

Copyright © 2025 Texas Instruments Incorporated

11.2.2.3.1.53 CFG_DATA_LL13_THRESHOLD Register (Offset = D4h) [Reset = 0000X0X0h]

CFG_DATA_LL13_THRESHOLD is shown in Table 11-801.

Return to the Summary Table.

Table 11-801. CFG_DATA_LL13_THRESHOLD Register Field Descriptions

Bit	Field	Type	Reset	Description
31-19	NU3	R	0h	
18-16	ll13dman	R/W	0h	If the long Packet Header is enabled, CBUFF can generate a DMA request to trigger the DMA trasnfer for the new packet 0 : Send a Request on DMA HW Req output line 0 1 : Send a Request on DMA HW Req output line 1 2 : Send a Request on DMA HW Req output line 2 3 : Send a Request on DMA HW Req output line 3 4 : Send a Request on DMA HW Req output line 4 5 : Send a Request on DMA HW Req output line 5 6 : Send a Request on DMA HW Req output line 6 7 : Do not generate dma trigger
15	NU2	R	Bh	
14-8	LL13_WR_THRESHOLD	R/W	0h	Configure the CBUFF FIFO Write threshold over which CBUFF will stall the DMA write to the CBUFF. Static configuration. This can be programmed to fixed value mentioned in the Programming Model
7	NU1	R	Bh	
6-0	LL13_RD_THRESHOLD	R/W	0h	Configure the CBUFF Read threshold to be Reached before sending the data over CSI2/LVDS and start draining the CBUFF FIFO. Static configuration. This can be programmed to fixed value mentioned in the Programming Model

Copyright © 2025 Texas Instruments Incorporated

11.2.2.3.1.54 CFG_DATA_LL14 Register (Offset = D8h) [Reset = 00000000h]

CFG_DATA_LL14 is shown in Table 11-802.

Return to the Summary Table.

Table 11-802. CFG_DATA_LL14 Register Field Descriptions

Bit	Field	Type	Reset	Description
31	LL14_DATA_WR_DELAY_EN	R/W	0h	TI Internal Feature CSI2 only Programming : Use the Packet Delay configured in CFG_DELAY_CONFIG. This is a Debug feature. Not requred in Programming model
30	LL14_LONG_PKT_DELAY_EN	R/W	0h	TI Internal Feature CSI2 only Programming : Use the Packet Delay configured in CFG_DELAY_CONFIG. This is a Debug feature. Not requred in Programming model
29	LL14_SHORT_PKT_DELAY_EN	R/W	0h	TI Internal Feature CSI2 only Programming : Use the Packet Delay configured in CFG_DELAY_CONFIG. This is a Debug feature. Not requred in Programming model
28	LL14_CRC_EN	R/W	0h	0 : CRC is disbaled 1 : This linklist corresponds to ADC Buffer data. Enable the CRC check from ADC Buffer to CBUFF
27	LL14_LPHDR_EN	R/W	0h	CSI2 Programming : 1 : Entry is start of a new CSI-2 packet. Send the LP Payload Header before sending data corresponind to this Linklist 0 : Link list is not the start of a Long packet but part of previous packet and hence directly send data LVDS Programming : 1 : Entry is start of a new LVDS Frame 0 : Entry is not the start of the new LVDS Frame
26	LL14_WAITFOR_PKTSENT	R/W	0h	TI Internal Feature Reserved for furture debug enhancement 1 : Wait for packet sent signal ack from CSI2 to move forward 0 : Do not wait for packet sent
25-23	LL14_BITPOS_SEL	R/W	0h	TI Internal Feature. Reserved for future use to select which of the 12-bits or 14-bits to be picked up from 16-bit CBUFF unit
22-9	LL14_SIZE	R/W	0h	Configure the Size of the data in terms of the numer of samples (not in terms of number of bytes). Sample refers to a 16 bit CBUFF Unit
8	LL14_FMT_IN	R/W	0h	0 : The incoming data sources for this Linklist is aligned to 128-bit 1 : The incoming data sources for this Linklist is aligned to 96-bit
7	LL14_FMT_MAP	R/W	0h	LVDS only : 0 : Choose CFG_LVDS_MAPPING_LANEx_FMT_0_y 1 : Choose CFG_LVDS_MAPPING_LANEx_FMT_1_y
6-5	LL14_FMT	R/W	0h	Specify the LVDS/CSI2 output format. 00 - 16bit 01 - 14-bit 10 - 12-bit
4-3	LL14_VCNUM	R/W	0h	CSI-2 : Configure the Virtual Channel Number for the Long Packet over which this data is sent
2	LL14_HS	R/W	0h	CSI-2 : 0 : Do not send an Hsync Start packet before sending this data 1 : Send an Hsync Start Packet before sending this data LVDS : 0 : Entry is not the first data of LVDS Frame 1 : Entry is the first data in the LVDS Frame
1	LL14_HE	R/W	0h	CSI-2 : 0 : Do not send an Hsync End packet after sending this data 1 : Send an Hsync End Packet after sending this data LVDS : 0 : Entry is not the last data of LVDS Frame 1 : Entry is the last data in the LVDS Frame
0	LL14_VALID	R/W	0h	0 : Linklist entry is invalid 1 : Linklist entry is valid

Copyright © 2025 Texas Instruments Incorporated

11.2.2.3.1.55 CFG_DATA_LL14_LPHDR_VAL Register (Offset = DCh) [Reset = 00000000h]

CFG_DATA_LL14_LPHDR_VAL is shown in Table 11-803.

Return to the Summary Table.

Table 11-803. CFG_DATA_LL14_LPHDR_VAL Register Field Descriptions

Bit	Field	Type	Reset	Description
31-0	LL14_LPHDR_VAL	R/W	0h	CSI-2 Programming : Configure the Long Packet Header to be sent to the Protocol Engine if the LPHDR_EN field is set for the linklist. LVDS Programming : Configure with the static value : 0xBBBBBBBB

Copyright © 2025 Texas Instruments Incorporated

11.2.2.3.1.56 CFG_DATA_LL14_THRESHOLD Register (Offset = E0h) [Reset = 0000X0X0h]

CFG_DATA_LL14_THRESHOLD is shown in Table 11-804.

Return to the Summary Table.

Table 11-804. CFG_DATA_LL14_THRESHOLD Register Field Descriptions

Bit	Field	Type	Reset	Description
31-19	NU3	R	0h	
18-16	ll14dman	R/W	0h	If the long Packet Header is enabled, CBUFF can generate a DMA request to trigger the DMA trasnfer for the new packet 0 : Send a Request on DMA HW Req output line 0 1 : Send a Request on DMA HW Req output line 1 2 : Send a Request on DMA HW Req output line 2 3 : Send a Request on DMA HW Req output line 3 4 : Send a Request on DMA HW Req output line 4 5 : Send a Request on DMA HW Req output line 5 6 : Send a Request on DMA HW Req output line 6 7 : Do not generate dma trigger
15	NU2	R	Bh	
14-8	LL14_WR_THRESHOLD	R/W	0h	Configure the CBUFF FIFO Write threshold over which CBUFF will stall the DMA write to the CBUFF. Static configuration. This can be programmed to fixed value mentioned in the Programming Model
7	NU1	R	Bh	
6-0	LL14_RD_THRESHOLD	R/W	0h	Configure the CBUFF Read threshold to be Reached before sending the data over CSI2/LVDS and start draining the CBUFF FIFO. Static configuration. This can be programmed to fixed value mentioned in the Programming Model

Copyright © 2025 Texas Instruments Incorporated

11.2.2.3.1.57 CFG_DATA_LL15 Register (Offset = E4h) [Reset = 00000000h]

CFG_DATA_LL15 is shown in Table 11-805.

Return to the Summary Table.

Table 11-805. CFG_DATA_LL15 Register Field Descriptions

Bit	Field	Type	Reset	Description
31	LL15_DATA_WR_DELAY_EN	R/W	0h	TI Internal Feature CSI2 only Programming : Use the Packet Delay configured in CFG_DELAY_CONFIG. This is a Debug feature. Not requred in Programming model
30	LL15_LONG_PKT_DELAY_EN	R/W	0h	TI Internal Feature CSI2 only Programming : Use the Packet Delay configured in CFG_DELAY_CONFIG. This is a Debug feature. Not requred in Programming model
29	LL15_SHORT_PKT_DELAY_EN	R/W	0h	TI Internal Feature CSI2 only Programming : Use the Packet Delay configured in CFG_DELAY_CONFIG. This is a Debug feature. Not requred in Programming model
28	LL15_CRC_EN	R/W	0h	0 : CRC is disbaled 1 : This linklist corresponds to ADC Buffer data. Enable the CRC check from ADC Buffer to CBUFF
27	LL15_LPHDR_EN	R/W	0h	CSI2 Programming : 1 : Entry is start of a new CSI-2 packet. Send the LP Payload Header before sending data corresponind to this Linklist 0 : Link list is not the start of a Long packet but part of previous packet and hence directly send data LVDS Programming : 1 : Entry is start of a new LVDS Frame 0 : Entry is not the start of the new LVDS Frame
26	LL15_WAITFOR_PKTSENT	R/W	0h	TI Internal Feature Reserved for furture debug enhancement 1 : Wait for packet sent signal ack from CSI2 to move forward 0 : Do not wait for packet sent
25-23	LL15_BITPOS_SEL	R/W	0h	TI Internal Feature. Reserved for future use to select which of the 12-bits or 14-bits to be picked up from 16-bit CBUFF unit
22-9	LL15_SIZE	R/W	0h	Configure the Size of the data in terms of the numer of samples (not in terms of number of bytes). Sample refers to a 16 bit CBUFF Unit
8	LL15_FMT_IN	R/W	0h	0 : The incoming data sources for this Linklist is aligned to 128-bit 1 : The incoming data sources for this Linklist is aligned to 96-bit
7	LL15_FMT_MAP	R/W	0h	LVDS only : 0 : Choose CFG_LVDS_MAPPING_LANEx_FMT_0_y 1 : Choose CFG_LVDS_MAPPING_LANEx_FMT_1_y
6-5	LL15_FMT	R/W	0h	Specify the LVDS/CSI2 output format. 00 - 16bit 01 - 14-bit 10 - 12-bit
4-3	LL15_VCNUM	R/W	0h	CSI-2 : Configure the Virtual Channel Number for the Long Packet over which this data is sent
2	LL15_HS	R/W	0h	CSI-2 : 0 : Do not send an Hsync Start packet before sending this data 1 : Send an Hsync Start Packet before sending this data LVDS : 0 : Entry is not the first data of LVDS Frame 1 : Entry is the first data in the LVDS Frame
1	LL15_HE	R/W	0h	CSI-2 : 0 : Do not send an Hsync End packet after sending this data 1 : Send an Hsync End Packet after sending this data LVDS : 0 : Entry is not the last data of LVDS Frame 1 : Entry is the last data in the LVDS Frame
0	LL15_VALID	R/W	0h	0 : Linklist entry is invalid 1 : Linklist entry is valid

Copyright © 2025 Texas Instruments Incorporated

11.2.2.3.1.58 CFG_DATA_LL15_LPHDR_VAL Register (Offset = E8h) [Reset = 00000000h]

CFG_DATA_LL15_LPHDR_VAL is shown in Table 11-806.

Return to the Summary Table.

Table 11-806. CFG_DATA_LL15_LPHDR_VAL Register Field Descriptions

Bit	Field	Type	Reset	Description
31-0	LL15_LPHDR_VAL	R/W	0h	CSI-2 Programming : Configure the Long Packet Header to be sent to the Protocol Engine if the LPHDR_EN field is set for the linklist. LVDS Programming : Configure with the static value : 0xBBBBBBBB

Copyright © 2025 Texas Instruments Incorporated

11.2.2.3.1.59 CFG_DATA_LL15_THRESHOLD Register (Offset = ECh) [Reset = 0000X0X0h]

CFG_DATA_LL15_THRESHOLD is shown in Table 11-807.

Return to the Summary Table.

Table 11-807. CFG_DATA_LL15_THRESHOLD Register Field Descriptions

Bit	Field	Type	Reset	Description
31-19	NU3	R	0h	
18-16	ll15dman	R/W	0h	If the long Packet Header is enabled, CBUFF can generate a DMA request to trigger the DMA trasnfer for the new packet 0 : Send a Request on DMA HW Req output line 0 1 : Send a Request on DMA HW Req output line 1 2 : Send a Request on DMA HW Req output line 2 3 : Send a Request on DMA HW Req output line 3 4 : Send a Request on DMA HW Req output line 4 5 : Send a Request on DMA HW Req output line 5 6 : Send a Request on DMA HW Req output line 6 7 : Do not generate dma trigger
15	NU2	R	Bh	
14-8	LL15_WR_THRESHOLD	R/W	0h	Configure the CBUFF FIFO Write threshold over which CBUFF will stall the DMA write to the CBUFF. Static configuration. This can be programmed to fixed value mentioned in the Programming Model
7	NU1	R	Bh	
6-0	LL15_RD_THRESHOLD	R/W	0h	Configure the CBUFF Read threshold to be Reached before sending the data over CSI2/LVDS and start draining the CBUFF FIFO. Static configuration. This can be programmed to fixed value mentioned in the Programming Model

Copyright © 2025 Texas Instruments Incorporated

11.2.2.3.1.60 CFG_DATA_LL16 Register (Offset = F0h) [Reset = 00000000h]

CFG_DATA_LL16 is shown in Table 11-808.

Return to the Summary Table.

Table 11-808. CFG_DATA_LL16 Register Field Descriptions

Bit	Field	Type	Reset	Description
31	LL16_DATA_WR_DELAY_EN	R/W	0h	TI Internal Feature CSI2 only Programming : Use the Packet Delay configured in CFG_DELAY_CONFIG. This is a Debug feature. Not requred in Programming model
30	LL16_LONG_PKT_DELAY_EN	R/W	0h	TI Internal Feature CSI2 only Programming : Use the Packet Delay configured in CFG_DELAY_CONFIG. This is a Debug feature. Not requred in Programming model
29	LL16_SHORT_PKT_DELAY_EN	R/W	0h	TI Internal Feature CSI2 only Programming : Use the Packet Delay configured in CFG_DELAY_CONFIG. This is a Debug feature. Not requred in Programming model
28	LL16_CRC_EN	R/W	0h	0 : CRC is disbaled 1 : This linklist corresponds to ADC Buffer data. Enable the CRC check from ADC Buffer to CBUFF
27	LL16_LPHDR_EN	R/W	0h	CSI2 Programming : 1 : Entry is start of a new CSI-2 packet. Send the LP Payload Header before sending data corresponind to this Linklist 0 : Link list is not the start of a Long packet but part of previous packet and hence directly send data LVDS Programming : 1 : Entry is start of a new LVDS Frame 0 : Entry is not the start of the new LVDS Frame
26	LL16_WAITFOR_PKTSENT	R/W	0h	TI Internal Feature Reserved for furture debug enhancement 1 : Wait for packet sent signal ack from CSI2 to move forward 0 : Do not wait for packet sent
25-23	LL16_BITPOS_SEL	R/W	0h	TI Internal Feature. Reserved for future use to select which of the 12-bits or 14-bits to be picked up from 16-bit CBUFF unit
22-9	LL16_SIZE	R/W	0h	Configure the Size of the data in terms of the numer of samples (not in terms of number of bytes). Sample refers to a 16 bit CBUFF Unit
8	LL16_FMT_IN	R/W	0h	0 : The incoming data sources for this Linklist is aligned to 128-bit 1 : The incoming data sources for this Linklist is aligned to 96-bit
7	LL16_FMT_MAP	R/W	0h	LVDS only : 0 : Choose CFG_LVDS_MAPPING_LANEx_FMT_0_y 1 : Choose CFG_LVDS_MAPPING_LANEx_FMT_1_y
6-5	LL16_FMT	R/W	0h	Specify the LVDS/CSI2 output format. 00 - 16bit 01 - 14-bit 10 - 12-bit
4-3	LL16_VCNUM	R/W	0h	CSI-2 : Configure the Virtual Channel Number for the Long Packet over which this data is sent
2	LL16_HS	R/W	0h	CSI-2 : 0 : Do not send an Hsync Start packet before sending this data 1 : Send an Hsync Start Packet before sending this data LVDS : 0 : Entry is not the first data of LVDS Frame 1 : Entry is the first data in the LVDS Frame
1	LL16_HE	R/W	0h	CSI-2 : 0 : Do not send an Hsync End packet after sending this data 1 : Send an Hsync End Packet after sending this data LVDS : 0 : Entry is not the last data of LVDS Frame 1 : Entry is the last data in the LVDS Frame
0	LL16_VALID	R/W	0h	0 : Linklist entry is invalid 1 : Linklist entry is valid

Copyright © 2025 Texas Instruments Incorporated

11.2.2.3.1.61 CFG_DATA_LL16_LPHDR_VAL Register (Offset = F4h) [Reset = 00000000h]

CFG_DATA_LL16_LPHDR_VAL is shown in Table 11-809.

Return to the Summary Table.

Table 11-809. CFG_DATA_LL16_LPHDR_VAL Register Field Descriptions

Bit	Field	Type	Reset	Description
31-0	LL16_LPHDR_VAL	R/W	0h	CSI-2 Programming : Configure the Long Packet Header to be sent to the Protocol Engine if the LPHDR_EN field is set for the linklist. LVDS Programming : Configure with the static value : 0xBBBBBBBB

Copyright © 2025 Texas Instruments Incorporated

11.2.2.3.1.62 CFG_DATA_LL16_THRESHOLD Register (Offset = F8h) [Reset = 0000X0X0h]

CFG_DATA_LL16_THRESHOLD is shown in Table 11-810.

Return to the Summary Table.

Table 11-810. CFG_DATA_LL16_THRESHOLD Register Field Descriptions

Bit	Field	Type	Reset	Description
31-19	NU3	R	0h	
18-16	ll16dman	R/W	0h	If the long Packet Header is enabled, CBUFF can generate a DMA request to trigger the DMA trasnfer for the new packet 0 : Send a Request on DMA HW Req output line 0 1 : Send a Request on DMA HW Req output line 1 2 : Send a Request on DMA HW Req output line 2 3 : Send a Request on DMA HW Req output line 3 4 : Send a Request on DMA HW Req output line 4 5 : Send a Request on DMA HW Req output line 5 6 : Send a Request on DMA HW Req output line 6 7 : Do not generate dma trigger
15	NU2	R	Bh	
14-8	LL16_WR_THRESHOLD	R/W	0h	Configure the CBUFF FIFO Write threshold over which CBUFF will stall the DMA write to the CBUFF. Static configuration. This can be programmed to fixed value mentioned in the Programming Model
7	NU1	R	Bh	
6-0	LL16_RD_THRESHOLD	R/W	0h	Configure the CBUFF Read threshold to be Reached before sending the data over CSI2/LVDS and start draining the CBUFF FIFO. Static configuration. This can be programmed to fixed value mentioned in the Programming Model

Copyright © 2025 Texas Instruments Incorporated

11.2.2.3.1.63 CFG_DATA_LL17 Register (Offset = FCh) [Reset = 00000000h]

CFG_DATA_LL17 is shown in Table 11-811.

Return to the Summary Table.

Table 11-811. CFG_DATA_LL17 Register Field Descriptions

Bit	Field	Type	Reset	Description
31	LL17_DATA_WR_DELAY_EN	R/W	0h	TI Internal Feature CSI2 only Programming : Use the Packet Delay configured in CFG_DELAY_CONFIG. This is a Debug feature. Not requred in Programming model
30	LL17_LONG_PKT_DELAY_EN	R/W	0h	TI Internal Feature CSI2 only Programming : Use the Packet Delay configured in CFG_DELAY_CONFIG. This is a Debug feature. Not requred in Programming model
29	LL17_SHORT_PKT_DELAY_EN	R/W	0h	TI Internal Feature CSI2 only Programming : Use the Packet Delay configured in CFG_DELAY_CONFIG. This is a Debug feature. Not requred in Programming model
28	LL17_CRC_EN	R/W	0h	0 : CRC is disbaled 1 : This linklist corresponds to ADC Buffer data. Enable the CRC check from ADC Buffer to CBUFF
27	LL17_LPHDR_EN	R/W	0h	CSI2 Programming : 1 : Entry is start of a new CSI-2 packet. Send the LP Payload Header before sending data corresponind to this Linklist 0 : Link list is not the start of a Long packet but part of previous packet and hence directly send data LVDS Programming : 1 : Entry is start of a new LVDS Frame 0 : Entry is not the start of the new LVDS Frame
26	LL17_WAITFOR_PKTSENT	R/W	0h	TI Internal Feature Reserved for furture debug enhancement 1 : Wait for packet sent signal ack from CSI2 to move forward 0 : Do not wait for packet sent
25-23	LL17_BITPOS_SEL	R/W	0h	TI Internal Feature. Reserved for future use to select which of the 12-bits or 14-bits to be picked up from 16-bit CBUFF unit
22-9	LL17_SIZE	R/W	0h	Configure the Size of the data in terms of the numer of samples (not in terms of number of bytes). Sample refers to a 16 bit CBUFF Unit
8	LL17_FMT_IN	R/W	0h	0 : The incoming data sources for this Linklist is aligned to 128-bit 1 : The incoming data sources for this Linklist is aligned to 96-bit
7	LL17_FMT_MAP	R/W	0h	LVDS only : 0 : Choose CFG_LVDS_MAPPING_LANEx_FMT_0_y 1 : Choose CFG_LVDS_MAPPING_LANEx_FMT_1_y
6-5	LL17_FMT	R/W	0h	Specify the LVDS/CSI2 output format. 00 - 16bit 01 - 14-bit 10 - 12-bit
4-3	LL17_VCNUM	R/W	0h	CSI-2 : Configure the Virtual Channel Number for the Long Packet over which this data is sent
2	LL17_HS	R/W	0h	CSI-2 : 0 : Do not send an Hsync Start packet before sending this data 1 : Send an Hsync Start Packet before sending this data LVDS : 0 : Entry is not the first data of LVDS Frame 1 : Entry is the first data in the LVDS Frame
1	LL17_HE	R/W	0h	CSI-2 : 0 : Do not send an Hsync End packet after sending this data 1 : Send an Hsync End Packet after sending this data LVDS : 0 : Entry is not the last data of LVDS Frame 1 : Entry is the last data in the LVDS Frame
0	LL17_VALID	R/W	0h	0 : Linklist entry is invalid 1 : Linklist entry is valid

Copyright © 2025 Texas Instruments Incorporated

11.2.2.3.1.64 CFG_DATA_LL17_LPHDR_VAL Register (Offset = 100h) [Reset = 00000000h]

CFG_DATA_LL17_LPHDR_VAL is shown in Table 11-812.

Return to the Summary Table.

Table 11-812. CFG_DATA_LL17_LPHDR_VAL Register Field Descriptions

Bit	Field	Type	Reset	Description
31-0	LL17_LPHDR_VAL	R/W	0h	CSI-2 Programming : Configure the Long Packet Header to be sent to the Protocol Engine if the LPHDR_EN field is set for the linklist. LVDS Programming : Configure with the static value : 0xBBBBBBBB

Copyright © 2025 Texas Instruments Incorporated

11.2.2.3.1.65 CFG_DATA_LL17_THRESHOLD Register (Offset = 104h) [Reset = 0000X0X0h]

CFG_DATA_LL17_THRESHOLD is shown in Table 11-813.

Return to the Summary Table.

Table 11-813. CFG_DATA_LL17_THRESHOLD Register Field Descriptions

Bit	Field	Type	Reset	Description
31-19	NU3	R	0h	
18-16	ll17dman	R/W	0h	If the long Packet Header is enabled, CBUFF can generate a DMA request to trigger the DMA trasnfer for the new packet 0 : Send a Request on DMA HW Req output line 0 1 : Send a Request on DMA HW Req output line 1 2 : Send a Request on DMA HW Req output line 2 3 : Send a Request on DMA HW Req output line 3 4 : Send a Request on DMA HW Req output line 4 5 : Send a Request on DMA HW Req output line 5 6 : Send a Request on DMA HW Req output line 6 7 : Do not generate dma trigger
15	NU2	R	Bh	
14-8	LL17_WR_THRESHOLD	R/W	0h	Configure the CBUFF FIFO Write threshold over which CBUFF will stall the DMA write to the CBUFF. Static configuration. This can be programmed to fixed value mentioned in the Programming Model
7	NU1	R	Bh	
6-0	LL17_RD_THRESHOLD	R/W	0h	Configure the CBUFF Read threshold to be Reached before sending the data over CSI2/LVDS and start draining the CBUFF FIFO. Static configuration. This can be programmed to fixed value mentioned in the Programming Model

Copyright © 2025 Texas Instruments Incorporated

11.2.2.3.1.66 CFG_DATA_LL18 Register (Offset = 108h) [Reset = 00000000h]

CFG_DATA_LL18 is shown in Table 11-814.

Return to the Summary Table.

Table 11-814. CFG_DATA_LL18 Register Field Descriptions

Bit	Field	Type	Reset	Description
31	LL18_DATA_WR_DELAY_EN	R/W	0h	TI Internal Feature CSI2 only Programming : Use the Packet Delay configured in CFG_DELAY_CONFIG. This is a Debug feature. Not requred in Programming model
30	LL18_LONG_PKT_DELAY_EN	R/W	0h	TI Internal Feature CSI2 only Programming : Use the Packet Delay configured in CFG_DELAY_CONFIG. This is a Debug feature. Not requred in Programming model
29	LL18_SHORT_PKT_DELAY_EN	R/W	0h	TI Internal Feature CSI2 only Programming : Use the Packet Delay configured in CFG_DELAY_CONFIG. This is a Debug feature. Not requred in Programming model
28	LL18_CRC_EN	R/W	0h	0 : CRC is disbaled 1 : This linklist corresponds to ADC Buffer data. Enable the CRC check from ADC Buffer to CBUFF
27	LL18_LPHDR_EN	R/W	0h	CSI2 Programming : 1 : Entry is start of a new CSI-2 packet. Send the LP Payload Header before sending data corresponind to this Linklist 0 : Link list is not the start of a Long packet but part of previous packet and hence directly send data LVDS Programming : 1 : Entry is start of a new LVDS Frame 0 : Entry is not the start of the new LVDS Frame
26	LL18_WAITFOR_PKTSENT	R/W	0h	TI Internal Feature Reserved for furture debug enhancement 1 : Wait for packet sent signal ack from CSI2 to move forward 0 : Do not wait for packet sent
25-23	LL18_BITPOS_SEL	R/W	0h	TI Internal Feature. Reserved for future use to select which of the 12-bits or 14-bits to be picked up from 16-bit CBUFF unit
22-9	LL18_SIZE	R/W	0h	Configure the Size of the data in terms of the numer of samples (not in terms of number of bytes). Sample refers to a 16 bit CBUFF Unit
8	LL18_FMT_IN	R/W	0h	0 : The incoming data sources for this Linklist is aligned to 128-bit 1 : The incoming data sources for this Linklist is aligned to 96-bit
7	LL18_FMT_MAP	R/W	0h	LVDS only : 0 : Choose CFG_LVDS_MAPPING_LANEx_FMT_0_y 1 : Choose CFG_LVDS_MAPPING_LANEx_FMT_1_y
6-5	LL18_FMT	R/W	0h	Specify the LVDS/CSI2 output format. 00 - 16bit 01 - 14-bit 10 - 12-bit
4-3	LL18_VCNUM	R/W	0h	CSI-2 : Configure the Virtual Channel Number for the Long Packet over which this data is sent
2	LL18_HS	R/W	0h	CSI-2 : 0 : Do not send an Hsync Start packet before sending this data 1 : Send an Hsync Start Packet before sending this data LVDS : 0 : Entry is not the first data of LVDS Frame 1 : Entry is the first data in the LVDS Frame
1	LL18_HE	R/W	0h	CSI-2 : 0 : Do not send an Hsync End packet after sending this data 1 : Send an Hsync End Packet after sending this data LVDS : 0 : Entry is not the last data of LVDS Frame 1 : Entry is the last data in the LVDS Frame
0	LL18_VALID	R/W	0h	0 : Linklist entry is invalid 1 : Linklist entry is valid

Copyright © 2025 Texas Instruments Incorporated

11.2.2.3.1.67 CFG_DATA_LL18_LPHDR_VAL Register (Offset = 10Ch) [Reset = 00000000h]

CFG_DATA_LL18_LPHDR_VAL is shown in Table 11-815.

Return to the Summary Table.

Table 11-815. CFG_DATA_LL18_LPHDR_VAL Register Field Descriptions

Bit	Field	Type	Reset	Description
31-0	LL18_LPHDR_VAL	R/W	0h	CSI-2 Programming : Configure the Long Packet Header to be sent to the Protocol Engine if the LPHDR_EN field is set for the linklist. LVDS Programming : Configure with the static value : 0xBBBBBBBB

Copyright © 2025 Texas Instruments Incorporated

11.2.2.3.1.68 CFG_DATA_LL18_THRESHOLD Register (Offset = 110h) [Reset = 0000X0X0h]

CFG_DATA_LL18_THRESHOLD is shown in Table 11-816.

Return to the Summary Table.

Table 11-816. CFG_DATA_LL18_THRESHOLD Register Field Descriptions

Bit	Field	Type	Reset	Description
31-19	NU3	R	0h	
18-16	ll18dman	R/W	0h	If the long Packet Header is enabled, CBUFF can generate a DMA request to trigger the DMA trasnfer for the new packet 0 : Send a Request on DMA HW Req output line 0 1 : Send a Request on DMA HW Req output line 1 2 : Send a Request on DMA HW Req output line 2 3 : Send a Request on DMA HW Req output line 3 4 : Send a Request on DMA HW Req output line 4 5 : Send a Request on DMA HW Req output line 5 6 : Send a Request on DMA HW Req output line 6 7 : Do not generate dma trigger
15	NU2	R	Bh	
14-8	LL18_WR_THRESHOLD	R/W	0h	Configure the CBUFF FIFO Write threshold over which CBUFF will stall the DMA write to the CBUFF. Static configuration. This can be programmed to fixed value mentioned in the Programming Model
7	NU1	R	Bh	
6-0	LL18_RD_THRESHOLD	R/W	0h	Configure the CBUFF Read threshold to be Reached before sending the data over CSI2/LVDS and start draining the CBUFF FIFO. Static configuration. This can be programmed to fixed value mentioned in the Programming Model

Copyright © 2025 Texas Instruments Incorporated

11.2.2.3.1.69 CFG_DATA_LL19 Register (Offset = 114h) [Reset = 00000000h]

CFG_DATA_LL19 is shown in Table 11-817.

Return to the Summary Table.

Table 11-817. CFG_DATA_LL19 Register Field Descriptions

Bit	Field	Type	Reset	Description
31	LL19_DATA_WR_DELAY_EN	R/W	0h	TI Internal Feature CSI2 only Programming : Use the Packet Delay configured in CFG_DELAY_CONFIG. This is a Debug feature. Not requred in Programming model
30	LL19_LONG_PKT_DELAY_EN	R/W	0h	TI Internal Feature CSI2 only Programming : Use the Packet Delay configured in CFG_DELAY_CONFIG. This is a Debug feature. Not requred in Programming model
29	LL19_SHORT_PKT_DELAY_EN	R/W	0h	TI Internal Feature CSI2 only Programming : Use the Packet Delay configured in CFG_DELAY_CONFIG. This is a Debug feature. Not requred in Programming model
28	LL19_CRC_EN	R/W	0h	0 : CRC is disbaled 1 : This linklist corresponds to ADC Buffer data. Enable the CRC check from ADC Buffer to CBUFF
27	LL19_LPHDR_EN	R/W	0h	CSI2 Programming : 1 : Entry is start of a new CSI-2 packet. Send the LP Payload Header before sending data corresponind to this Linklist 0 : Link list is not the start of a Long packet but part of previous packet and hence directly send data LVDS Programming : 1 : Entry is start of a new LVDS Frame 0 : Entry is not the start of the new LVDS Frame
26	LL19_WAITFOR_PKTSENT	R/W	0h	TI Internal Feature Reserved for furture debug enhancement 1 : Wait for packet sent signal ack from CSI2 to move forward 0 : Do not wait for packet sent
25-23	LL19_BITPOS_SEL	R/W	0h	TI Internal Feature. Reserved for future use to select which of the 12-bits or 14-bits to be picked up from 16-bit CBUFF unit
22-9	LL19_SIZE	R/W	0h	Configure the Size of the data in terms of the numer of samples (not in terms of number of bytes). Sample refers to a 16 bit CBUFF Unit
8	LL19_FMT_IN	R/W	0h	0 : The incoming data sources for this Linklist is aligned to 128-bit 1 : The incoming data sources for this Linklist is aligned to 96-bit
7	LL19_FMT_MAP	R/W	0h	LVDS only : 0 : Choose CFG_LVDS_MAPPING_LANEx_FMT_0_y 1 : Choose CFG_LVDS_MAPPING_LANEx_FMT_1_y
6-5	LL19_FMT	R/W	0h	Specify the LVDS/CSI2 output format. 00 - 16bit 01 - 14-bit 10 - 12-bit
4-3	LL19_VCNUM	R/W	0h	CSI-2 : Configure the Virtual Channel Number for the Long Packet over which this data is sent
2	LL19_HS	R/W	0h	CSI-2 : 0 : Do not send an Hsync Start packet before sending this data 1 : Send an Hsync Start Packet before sending this data LVDS : 0 : Entry is not the first data of LVDS Frame 1 : Entry is the first data in the LVDS Frame
1	LL19_HE	R/W	0h	CSI-2 : 0 : Do not send an Hsync End packet after sending this data 1 : Send an Hsync End Packet after sending this data LVDS : 0 : Entry is not the last data of LVDS Frame 1 : Entry is the last data in the LVDS Frame
0	LL19_VALID	R/W	0h	0 : Linklist entry is invalid 1 : Linklist entry is valid

Copyright © 2025 Texas Instruments Incorporated

11.2.2.3.1.70 CFG_DATA_LL19_LPHDR_VAL Register (Offset = 118h) [Reset = 00000000h]

CFG_DATA_LL19_LPHDR_VAL is shown in Table 11-818.

Return to the Summary Table.

Table 11-818. CFG_DATA_LL19_LPHDR_VAL Register Field Descriptions

Bit	Field	Type	Reset	Description
31-0	LL19_LPHDR_VAL	R/W	0h	CSI-2 Programming : Configure the Long Packet Header to be sent to the Protocol Engine if the LPHDR_EN field is set for the linklist. LVDS Programming : Configure with the static value : 0xBBBBBBBB

Copyright © 2025 Texas Instruments Incorporated

11.2.2.3.1.71 CFG_DATA_LL19_THRESHOLD Register (Offset = 11Ch) [Reset = 0000X0X0h]

CFG_DATA_LL19_THRESHOLD is shown in Table 11-819.

Return to the Summary Table.

Table 11-819. CFG_DATA_LL19_THRESHOLD Register Field Descriptions

Bit	Field	Type	Reset	Description
31-19	NU3	R	0h	
18-16	ll19dman	R/W	0h	If the long Packet Header is enabled, CBUFF can generate a DMA request to trigger the DMA trasnfer for the new packet 0 : Send a Request on DMA HW Req output line 0 1 : Send a Request on DMA HW Req output line 1 2 : Send a Request on DMA HW Req output line 2 3 : Send a Request on DMA HW Req output line 3 4 : Send a Request on DMA HW Req output line 4 5 : Send a Request on DMA HW Req output line 5 6 : Send a Request on DMA HW Req output line 6 7 : Do not generate dma trigger
15	NU2	R	Bh	
14-8	LL19_WR_THRESHOLD	R/W	0h	Configure the CBUFF FIFO Write threshold over which CBUFF will stall the DMA write to the CBUFF. Static configuration. This can be programmed to fixed value mentioned in the Programming Model
7	NU1	R	Bh	
6-0	LL19_RD_THRESHOLD	R/W	0h	Configure the CBUFF Read threshold to be Reached before sending the data over CSI2/LVDS and start draining the CBUFF FIFO. Static configuration. This can be programmed to fixed value mentioned in the Programming Model

Copyright © 2025 Texas Instruments Incorporated

11.2.2.3.1.72 CFG_DATA_LL20 Register (Offset = 120h) [Reset = 00000000h]

CFG_DATA_LL20 is shown in Table 11-820.

Return to the Summary Table.

Table 11-820. CFG_DATA_LL20 Register Field Descriptions

Bit	Field	Type	Reset	Description
31	LL20_DATA_WR_DELAY_EN	R/W	0h	TI Internal Feature CSI2 only Programming : Use the Packet Delay configured in CFG_DELAY_CONFIG. This is a Debug feature. Not requred in Programming model
30	LL20_LONG_PKT_DELAY_EN	R/W	0h	TI Internal Feature CSI2 only Programming : Use the Packet Delay configured in CFG_DELAY_CONFIG. This is a Debug feature. Not requred in Programming model
29	LL20_SHORT_PKT_DELAY_EN	R/W	0h	TI Internal Feature CSI2 only Programming : Use the Packet Delay configured in CFG_DELAY_CONFIG. This is a Debug feature. Not requred in Programming model
28	LL20_CRC_EN	R/W	0h	0 : CRC is disbaled 1 : This linklist corresponds to ADC Buffer data. Enable the CRC check from ADC Buffer to CBUFF
27	LL20_LPHDR_EN	R/W	0h	CSI2 Programming : 1 : Entry is start of a new CSI-2 packet. Send the LP Payload Header before sending data corresponind to this Linklist 0 : Link list is not the start of a Long packet but part of previous packet and hence directly send data LVDS Programming : 1 : Entry is start of a new LVDS Frame 0 : Entry is not the start of the new LVDS Frame
26	LL20_WAITFOR_PKTSENT	R/W	0h	TI Internal Feature Reserved for furture debug enhancement 1 : Wait for packet sent signal ack from CSI2 to move forward 0 : Do not wait for packet sent
25-23	LL20_BITPOS_SEL	R/W	0h	TI Internal Feature. Reserved for future use to select which of the 12-bits or 14-bits to be picked up from 16-bit CBUFF unit
22-9	LL20_SIZE	R/W	0h	Configure the Size of the data in terms of the numer of samples (not in terms of number of bytes). Sample refers to a 16 bit CBUFF Unit
8	LL20_FMT_IN	R/W	0h	0 : The incoming data sources for this Linklist is aligned to 128-bit 1 : The incoming data sources for this Linklist is aligned to 96-bit
7	LL20_FMT_MAP	R/W	0h	LVDS only : 0 : Choose CFG_LVDS_MAPPING_LANEx_FMT_0_y 1 : Choose CFG_LVDS_MAPPING_LANEx_FMT_1_y
6-5	LL20_FMT	R/W	0h	Specify the LVDS/CSI2 output format. 00 - 16bit 01 - 14-bit 10 - 12-bit
4-3	LL20_VCNUM	R/W	0h	CSI-2 : Configure the Virtual Channel Number for the Long Packet over which this data is sent
2	LL20_HS	R/W	0h	CSI-2 : 0 : Do not send an Hsync Start packet before sending this data 1 : Send an Hsync Start Packet before sending this data LVDS : 0 : Entry is not the first data of LVDS Frame 1 : Entry is the first data in the LVDS Frame
1	LL20_HE	R/W	0h	CSI-2 : 0 : Do not send an Hsync End packet after sending this data 1 : Send an Hsync End Packet after sending this data LVDS : 0 : Entry is not the last data of LVDS Frame 1 : Entry is the last data in the LVDS Frame
0	LL20_VALID	R/W	0h	0 : Linklist entry is invalid 1 : Linklist entry is valid

Copyright © 2025 Texas Instruments Incorporated

11.2.2.3.1.73 CFG_DATA_LL20_LPHDR_VAL Register (Offset = 124h) [Reset = 00000000h]

CFG_DATA_LL20_LPHDR_VAL is shown in Table 11-821.

Return to the Summary Table.

Table 11-821. CFG_DATA_LL20_LPHDR_VAL Register Field Descriptions

Bit	Field	Type	Reset	Description
31-0	LL20_LPHDR_VAL	R/W	0h	CSI-2 Programming : Configure the Long Packet Header to be sent to the Protocol Engine if the LPHDR_EN field is set for the linklist. LVDS Programming : Configure with the static value : 0xBBBBBBBB

Copyright © 2025 Texas Instruments Incorporated

11.2.2.3.1.74 CFG_DATA_LL20_THRESHOLD Register (Offset = 128h) [Reset = 0000X0X0h]

CFG_DATA_LL20_THRESHOLD is shown in Table 11-822.

Return to the Summary Table.

Table 11-822. CFG_DATA_LL20_THRESHOLD Register Field Descriptions

Bit	Field	Type	Reset	Description
31-19	NU3	R	0h	
18-16	ll20dman	R/W	0h	If the long Packet Header is enabled, CBUFF can generate a DMA request to trigger the DMA trasnfer for the new packet 0 : Send a Request on DMA HW Req output line 0 1 : Send a Request on DMA HW Req output line 1 2 : Send a Request on DMA HW Req output line 2 3 : Send a Request on DMA HW Req output line 3 4 : Send a Request on DMA HW Req output line 4 5 : Send a Request on DMA HW Req output line 5 6 : Send a Request on DMA HW Req output line 6 7 : Do not generate dma trigger
15	NU2	R	Bh	
14-8	LL20_WR_THRESHOLD	R/W	0h	Configure the CBUFF FIFO Write threshold over which CBUFF will stall the DMA write to the CBUFF. Static configuration. This can be programmed to fixed value mentioned in the Programming Model
7	NU1	R	Bh	
6-0	LL20_RD_THRESHOLD	R/W	0h	Configure the CBUFF Read threshold to be Reached before sending the data over CSI2/LVDS and start draining the CBUFF FIFO. Static configuration. This can be programmed to fixed value mentioned in the Programming Model

Copyright © 2025 Texas Instruments Incorporated

11.2.2.3.1.75 CFG_DATA_LL21 Register (Offset = 12Ch) [Reset = 00000000h]

CFG_DATA_LL21 is shown in Table 11-823.

Return to the Summary Table.

Table 11-823. CFG_DATA_LL21 Register Field Descriptions

Bit	Field	Type	Reset	Description
31	LL21_DATA_WR_DELAY_EN	R/W	0h	TI Internal Feature CSI2 only Programming : Use the Packet Delay configured in CFG_DELAY_CONFIG. This is a Debug feature. Not requred in Programming model
30	LL21_LONG_PKT_DELAY_EN	R/W	0h	TI Internal Feature CSI2 only Programming : Use the Packet Delay configured in CFG_DELAY_CONFIG. This is a Debug feature. Not requred in Programming model
29	LL21_SHORT_PKT_DELAY_EN	R/W	0h	TI Internal Feature CSI2 only Programming : Use the Packet Delay configured in CFG_DELAY_CONFIG. This is a Debug feature. Not requred in Programming model
28	LL21_CRC_EN	R/W	0h	0 : CRC is disbaled 1 : This linklist corresponds to ADC Buffer data. Enable the CRC check from ADC Buffer to CBUFF
27	LL21_LPHDR_EN	R/W	0h	CSI2 Programming : 1 : Entry is start of a new CSI-2 packet. Send the LP Payload Header before sending data corresponind to this Linklist 0 : Link list is not the start of a Long packet but part of previous packet and hence directly send data LVDS Programming : 1 : Entry is start of a new LVDS Frame 0 : Entry is not the start of the new LVDS Frame
26	LL21_WAITFOR_PKTSENT	R/W	0h	TI Internal Feature Reserved for furture debug enhancement 1 : Wait for packet sent signal ack from CSI2 to move forward 0 : Do not wait for packet sent
25-23	LL21_BITPOS_SEL	R/W	0h	TI Internal Feature. Reserved for future use to select which of the 12-bits or 14-bits to be picked up from 16-bit CBUFF unit
22-9	LL21_SIZE	R/W	0h	Configure the Size of the data in terms of the numer of samples (not in terms of number of bytes). Sample refers to a 16 bit CBUFF Unit
8	LL21_FMT_IN	R/W	0h	0 : The incoming data sources for this Linklist is aligned to 128-bit 1 : The incoming data sources for this Linklist is aligned to 96-bit
7	LL21_FMT_MAP	R/W	0h	LVDS only : 0 : Choose CFG_LVDS_MAPPING_LANEx_FMT_0_y 1 : Choose CFG_LVDS_MAPPING_LANEx_FMT_1_y
6-5	LL21_FMT	R/W	0h	Specify the LVDS/CSI2 output format. 00 - 16bit 01 - 14-bit 10 - 12-bit
4-3	LL21_VCNUM	R/W	0h	CSI-2 : Configure the Virtual Channel Number for the Long Packet over which this data is sent
2	LL21_HS	R/W	0h	CSI-2 : 0 : Do not send an Hsync Start packet before sending this data 1 : Send an Hsync Start Packet before sending this data LVDS : 0 : Entry is not the first data of LVDS Frame 1 : Entry is the first data in the LVDS Frame
1	LL21_HE	R/W	0h	CSI-2 : 0 : Do not send an Hsync End packet after sending this data 1 : Send an Hsync End Packet after sending this data LVDS : 0 : Entry is not the last data of LVDS Frame 1 : Entry is the last data in the LVDS Frame
0	LL21_VALID	R/W	0h	0 : Linklist entry is invalid 1 : Linklist entry is valid

Copyright © 2025 Texas Instruments Incorporated

11.2.2.3.1.76 CFG_DATA_LL21_LPHDR_VAL Register (Offset = 130h) [Reset = 00000000h]

CFG_DATA_LL21_LPHDR_VAL is shown in Table 11-824.

Return to the Summary Table.

Table 11-824. CFG_DATA_LL21_LPHDR_VAL Register Field Descriptions

Bit	Field	Type	Reset	Description
31-0	LL21_LPHDR_VAL	R/W	0h	CSI-2 Programming : Configure the Long Packet Header to be sent to the Protocol Engine if the LPHDR_EN field is set for the linklist. LVDS Programming : Configure with the static value : 0xBBBBBBBB

Copyright © 2025 Texas Instruments Incorporated

11.2.2.3.1.77 CFG_DATA_LL21_THRESHOLD Register (Offset = 134h) [Reset = 0000X0X0h]

CFG_DATA_LL21_THRESHOLD is shown in Table 11-825.

Return to the Summary Table.

Table 11-825. CFG_DATA_LL21_THRESHOLD Register Field Descriptions

Bit	Field	Type	Reset	Description
31-19	NU3	R	0h	
18-16	ll21dman	R/W	0h	If the long Packet Header is enabled, CBUFF can generate a DMA request to trigger the DMA trasnfer for the new packet 0 : Send a Request on DMA HW Req output line 0 1 : Send a Request on DMA HW Req output line 1 2 : Send a Request on DMA HW Req output line 2 3 : Send a Request on DMA HW Req output line 3 4 : Send a Request on DMA HW Req output line 4 5 : Send a Request on DMA HW Req output line 5 6 : Send a Request on DMA HW Req output line 6 7 : Do not generate dma trigger
15	NU2	R	Bh	
14-8	LL21_WR_THRESHOLD	R/W	0h	Configure the CBUFF FIFO Write threshold over which CBUFF will stall the DMA write to the CBUFF. Static configuration. This can be programmed to fixed value mentioned in the Programming Model
7	NU1	R	Bh	
6-0	LL21_RD_THRESHOLD	R/W	0h	Configure the CBUFF Read threshold to be Reached before sending the data over CSI2/LVDS and start draining the CBUFF FIFO. Static configuration. This can be programmed to fixed value mentioned in the Programming Model

Copyright © 2025 Texas Instruments Incorporated

11.2.2.3.1.78 CFG_DATA_LL22 Register (Offset = 138h) [Reset = 00000000h]

CFG_DATA_LL22 is shown in Table 11-826.

Return to the Summary Table.

Table 11-826. CFG_DATA_LL22 Register Field Descriptions

Bit	Field	Type	Reset	Description
31	LL22_DATA_WR_DELAY_EN	R/W	0h	TI Internal Feature CSI2 only Programming : Use the Packet Delay configured in CFG_DELAY_CONFIG. This is a Debug feature. Not requred in Programming model
30	LL22_LONG_PKT_DELAY_EN	R/W	0h	TI Internal Feature CSI2 only Programming : Use the Packet Delay configured in CFG_DELAY_CONFIG. This is a Debug feature. Not requred in Programming model
29	LL22_SHORT_PKT_DELAY_EN	R/W	0h	TI Internal Feature CSI2 only Programming : Use the Packet Delay configured in CFG_DELAY_CONFIG. This is a Debug feature. Not requred in Programming model
28	LL22_CRC_EN	R/W	0h	0 : CRC is disbaled 1 : This linklist corresponds to ADC Buffer data. Enable the CRC check from ADC Buffer to CBUFF
27	LL22_LPHDR_EN	R/W	0h	CSI2 Programming : 1 : Entry is start of a new CSI-2 packet. Send the LP Payload Header before sending data corresponind to this Linklist 0 : Link list is not the start of a Long packet but part of previous packet and hence directly send data LVDS Programming : 1 : Entry is start of a new LVDS Frame 0 : Entry is not the start of the new LVDS Frame
26	LL22_WAITFOR_PKTSENT	R/W	0h	TI Internal Feature Reserved for furture debug enhancement 1 : Wait for packet sent signal ack from CSI2 to move forward 0 : Do not wait for packet sent
25-23	LL22_BITPOS_SEL	R/W	0h	TI Internal Feature. Reserved for future use to select which of the 12-bits or 14-bits to be picked up from 16-bit CBUFF unit
22-9	LL22_SIZE	R/W	0h	Configure the Size of the data in terms of the numer of samples (not in terms of number of bytes). Sample refers to a 16 bit CBUFF Unit
8	LL22_FMT_IN	R/W	0h	0 : The incoming data sources for this Linklist is aligned to 128-bit 1 : The incoming data sources for this Linklist is aligned to 96-bit
7	LL22_FMT_MAP	R/W	0h	LVDS only : 0 : Choose CFG_LVDS_MAPPING_LANEx_FMT_0_y 1 : Choose CFG_LVDS_MAPPING_LANEx_FMT_1_y
6-5	LL22_FMT	R/W	0h	Specify the LVDS/CSI2 output format. 00 - 16bit 01 - 14-bit 10 - 12-bit
4-3	LL22_VCNUM	R/W	0h	CSI-2 : Configure the Virtual Channel Number for the Long Packet over which this data is sent
2	LL22_HS	R/W	0h	CSI-2 : 0 : Do not send an Hsync Start packet before sending this data 1 : Send an Hsync Start Packet before sending this data LVDS : 0 : Entry is not the first data of LVDS Frame 1 : Entry is the first data in the LVDS Frame
1	LL22_HE	R/W	0h	CSI-2 : 0 : Do not send an Hsync End packet after sending this data 1 : Send an Hsync End Packet after sending this data LVDS : 0 : Entry is not the last data of LVDS Frame 1 : Entry is the last data in the LVDS Frame
0	LL22_VALID	R/W	0h	0 : Linklist entry is invalid 1 : Linklist entry is valid

Copyright © 2025 Texas Instruments Incorporated

11.2.2.3.1.79 CFG_DATA_LL22_LPHDR_VAL Register (Offset = 13Ch) [Reset = 00000000h]

CFG_DATA_LL22_LPHDR_VAL is shown in Table 11-827.

Return to the Summary Table.

Table 11-827. CFG_DATA_LL22_LPHDR_VAL Register Field Descriptions

Bit	Field	Type	Reset	Description
31-0	LL22_LPHDR_VAL	R/W	0h	CSI-2 Programming : Configure the Long Packet Header to be sent to the Protocol Engine if the LPHDR_EN field is set for the linklist. LVDS Programming : Configure with the static value : 0xBBBBBBBB

Copyright © 2025 Texas Instruments Incorporated

11.2.2.3.1.80 CFG_DATA_LL22_THRESHOLD Register (Offset = 140h) [Reset = 0000X0X0h]

CFG_DATA_LL22_THRESHOLD is shown in Table 11-828.

Return to the Summary Table.

Table 11-828. CFG_DATA_LL22_THRESHOLD Register Field Descriptions

Bit	Field	Type	Reset	Description
31-19	NU3	R	0h	
18-16	ll22dman	R/W	0h	If the long Packet Header is enabled, CBUFF can generate a DMA request to trigger the DMA trasnfer for the new packet 0 : Send a Request on DMA HW Req output line 0 1 : Send a Request on DMA HW Req output line 1 2 : Send a Request on DMA HW Req output line 2 3 : Send a Request on DMA HW Req output line 3 4 : Send a Request on DMA HW Req output line 4 5 : Send a Request on DMA HW Req output line 5 6 : Send a Request on DMA HW Req output line 6 7 : Do not generate dma trigger
15	NU2	R	Bh	
14-8	LL22_WR_THRESHOLD	R/W	0h	Configure the CBUFF FIFO Write threshold over which CBUFF will stall the DMA write to the CBUFF. Static configuration. This can be programmed to fixed value mentioned in the Programming Model
7	NU1	R	Bh	
6-0	LL22_RD_THRESHOLD	R/W	0h	Configure the CBUFF Read threshold to be Reached before sending the data over CSI2/LVDS and start draining the CBUFF FIFO. Static configuration. This can be programmed to fixed value mentioned in the Programming Model

Copyright © 2025 Texas Instruments Incorporated

11.2.2.3.1.81 CFG_DATA_LL23 Register (Offset = 144h) [Reset = 00000000h]

CFG_DATA_LL23 is shown in Table 11-829.

Return to the Summary Table.

Table 11-829. CFG_DATA_LL23 Register Field Descriptions

Bit	Field	Type	Reset	Description
31	LL23_DATA_WR_DELAY_EN	R/W	0h	TI Internal Feature CSI2 only Programming : Use the Packet Delay configured in CFG_DELAY_CONFIG. This is a Debug feature. Not requred in Programming model
30	LL23_LONG_PKT_DELAY_EN	R/W	0h	TI Internal Feature CSI2 only Programming : Use the Packet Delay configured in CFG_DELAY_CONFIG. This is a Debug feature. Not requred in Programming model
29	LL23_SHORT_PKT_DELAY_EN	R/W	0h	TI Internal Feature CSI2 only Programming : Use the Packet Delay configured in CFG_DELAY_CONFIG. This is a Debug feature. Not requred in Programming model
28	LL23_CRC_EN	R/W	0h	0 : CRC is disbaled 1 : This linklist corresponds to ADC Buffer data. Enable the CRC check from ADC Buffer to CBUFF
27	LL23_LPHDR_EN	R/W	0h	CSI2 Programming : 1 : Entry is start of a new CSI-2 packet. Send the LP Payload Header before sending data corresponind to this Linklist 0 : Link list is not the start of a Long packet but part of previous packet and hence directly send data LVDS Programming : 1 : Entry is start of a new LVDS Frame 0 : Entry is not the start of the new LVDS Frame
26	LL23_WAITFOR_PKTSENT	R/W	0h	TI Internal Feature Reserved for furture debug enhancement 1 : Wait for packet sent signal ack from CSI2 to move forward 0 : Do not wait for packet sent
25-23	LL23_BITPOS_SEL	R/W	0h	TI Internal Feature. Reserved for future use to select which of the 12-bits or 14-bits to be picked up from 16-bit CBUFF unit
22-9	LL23_SIZE	R/W	0h	Configure the Size of the data in terms of the numer of samples (not in terms of number of bytes). Sample refers to a 16 bit CBUFF Unit
8	LL23_FMT_IN	R/W	0h	0 : The incoming data sources for this Linklist is aligned to 128-bit 1 : The incoming data sources for this Linklist is aligned to 96-bit
7	LL23_FMT_MAP	R/W	0h	LVDS only : 0 : Choose CFG_LVDS_MAPPING_LANEx_FMT_0_y 1 : Choose CFG_LVDS_MAPPING_LANEx_FMT_1_y
6-5	LL23_FMT	R/W	0h	Specify the LVDS/CSI2 output format. 00 - 16bit 01 - 14-bit 10 - 12-bit
4-3	LL23_VCNUM	R/W	0h	CSI-2 : Configure the Virtual Channel Number for the Long Packet over which this data is sent
2	LL23_HS	R/W	0h	CSI-2 : 0 : Do not send an Hsync Start packet before sending this data 1 : Send an Hsync Start Packet before sending this data LVDS : 0 : Entry is not the first data of LVDS Frame 1 : Entry is the first data in the LVDS Frame
1	LL23_HE	R/W	0h	CSI-2 : 0 : Do not send an Hsync End packet after sending this data 1 : Send an Hsync End Packet after sending this data LVDS : 0 : Entry is not the last data of LVDS Frame 1 : Entry is the last data in the LVDS Frame
0	LL23_VALID	R/W	0h	0 : Linklist entry is invalid 1 : Linklist entry is valid

Copyright © 2025 Texas Instruments Incorporated

11.2.2.3.1.82 CFG_DATA_LL23_LPHDR_VAL Register (Offset = 148h) [Reset = 00000000h]

CFG_DATA_LL23_LPHDR_VAL is shown in Table 11-830.

Return to the Summary Table.

Table 11-830. CFG_DATA_LL23_LPHDR_VAL Register Field Descriptions

Bit	Field	Type	Reset	Description
31-0	LL23_LPHDR_VAL	R/W	0h	CSI-2 Programming : Configure the Long Packet Header to be sent to the Protocol Engine if the LPHDR_EN field is set for the linklist. LVDS Programming : Configure with the static value : 0xBBBBBBBB

Copyright © 2025 Texas Instruments Incorporated

11.2.2.3.1.83 CFG_DATA_LL23_THRESHOLD Register (Offset = 14Ch) [Reset = 0000X0X0h]

CFG_DATA_LL23_THRESHOLD is shown in Table 11-831.

Return to the Summary Table.

Table 11-831. CFG_DATA_LL23_THRESHOLD Register Field Descriptions

Bit	Field	Type	Reset	Description
31-19	NU3	R	0h	
18-16	ll23dman	R/W	0h	If the long Packet Header is enabled, CBUFF can generate a DMA request to trigger the DMA trasnfer for the new packet 0 : Send a Request on DMA HW Req output line 0 1 : Send a Request on DMA HW Req output line 1 2 : Send a Request on DMA HW Req output line 2 3 : Send a Request on DMA HW Req output line 3 4 : Send a Request on DMA HW Req output line 4 5 : Send a Request on DMA HW Req output line 5 6 : Send a Request on DMA HW Req output line 6 7 : Do not generate dma trigger
15	NU2	R	Bh	
14-8	LL23_WR_THRESHOLD	R/W	0h	Configure the CBUFF FIFO Write threshold over which CBUFF will stall the DMA write to the CBUFF. Static configuration. This can be programmed to fixed value mentioned in the Programming Model
7	NU1	R	Bh	
6-0	LL23_RD_THRESHOLD	R/W	0h	Configure the CBUFF Read threshold to be Reached before sending the data over CSI2/LVDS and start draining the CBUFF FIFO. Static configuration. This can be programmed to fixed value mentioned in the Programming Model

Copyright © 2025 Texas Instruments Incorporated

11.2.2.3.1.84 CFG_DATA_LL24 Register (Offset = 150h) [Reset = 00000000h]

CFG_DATA_LL24 is shown in Table 11-832.

Return to the Summary Table.

Table 11-832. CFG_DATA_LL24 Register Field Descriptions

Bit	Field	Type	Reset	Description
31	LL24_DATA_WR_DELAY_EN	R/W	0h	TI Internal Feature CSI2 only Programming : Use the Packet Delay configured in CFG_DELAY_CONFIG. This is a Debug feature. Not requred in Programming model
30	LL24_LONG_PKT_DELAY_EN	R/W	0h	TI Internal Feature CSI2 only Programming : Use the Packet Delay configured in CFG_DELAY_CONFIG. This is a Debug feature. Not requred in Programming model
29	LL24_SHORT_PKT_DELAY_EN	R/W	0h	TI Internal Feature CSI2 only Programming : Use the Packet Delay configured in CFG_DELAY_CONFIG. This is a Debug feature. Not requred in Programming model
28	LL24_CRC_EN	R/W	0h	0 : CRC is disbaled 1 : This linklist corresponds to ADC Buffer data. Enable the CRC check from ADC Buffer to CBUFF
27	LL24_LPHDR_EN	R/W	0h	CSI2 Programming : 1 : Entry is start of a new CSI-2 packet. Send the LP Payload Header before sending data corresponind to this Linklist 0 : Link list is not the start of a Long packet but part of previous packet and hence directly send data LVDS Programming : 1 : Entry is start of a new LVDS Frame 0 : Entry is not the start of the new LVDS Frame
26	LL24_WAITFOR_PKTSENT	R/W	0h	TI Internal Feature Reserved for furture debug enhancement 1 : Wait for packet sent signal ack from CSI2 to move forward 0 : Do not wait for packet sent
25-23	LL24_BITPOS_SEL	R/W	0h	TI Internal Feature. Reserved for future use to select which of the 12-bits or 14-bits to be picked up from 16-bit CBUFF unit
22-9	LL24_SIZE	R/W	0h	Configure the Size of the data in terms of the numer of samples (not in terms of number of bytes). Sample refers to a 16 bit CBUFF Unit
8	LL24_FMT_IN	R/W	0h	0 : The incoming data sources for this Linklist is aligned to 128-bit 1 : The incoming data sources for this Linklist is aligned to 96-bit
7	LL24_FMT_MAP	R/W	0h	LVDS only : 0 : Choose CFG_LVDS_MAPPING_LANEx_FMT_0_y 1 : Choose CFG_LVDS_MAPPING_LANEx_FMT_1_y
6-5	LL24_FMT	R/W	0h	Specify the LVDS/CSI2 output format. 00 - 16bit 01 - 14-bit 10 - 12-bit
4-3	LL24_VCNUM	R/W	0h	CSI-2 : Configure the Virtual Channel Number for the Long Packet over which this data is sent
2	LL24_HS	R/W	0h	CSI-2 : 0 : Do not send an Hsync Start packet before sending this data 1 : Send an Hsync Start Packet before sending this data LVDS : 0 : Entry is not the first data of LVDS Frame 1 : Entry is the first data in the LVDS Frame
1	LL24_HE	R/W	0h	CSI-2 : 0 : Do not send an Hsync End packet after sending this data 1 : Send an Hsync End Packet after sending this data LVDS : 0 : Entry is not the last data of LVDS Frame 1 : Entry is the last data in the LVDS Frame
0	LL24_VALID	R/W	0h	0 : Linklist entry is invalid 1 : Linklist entry is valid

Copyright © 2025 Texas Instruments Incorporated

11.2.2.3.1.85 CFG_DATA_LL24_LPHDR_VAL Register (Offset = 154h) [Reset = 00000000h]

CFG_DATA_LL24_LPHDR_VAL is shown in Table 11-833.

Return to the Summary Table.

Table 11-833. CFG_DATA_LL24_LPHDR_VAL Register Field Descriptions

Bit	Field	Type	Reset	Description
31-0	LL24_LPHDR_VAL	R/W	0h	CSI-2 Programming : Configure the Long Packet Header to be sent to the Protocol Engine if the LPHDR_EN field is set for the linklist. LVDS Programming : Configure with the static value : 0xBBBBBBBB

Copyright © 2025 Texas Instruments Incorporated

11.2.2.3.1.86 CFG_DATA_LL24_THRESHOLD Register (Offset = 158h) [Reset = 0000X0X0h]

CFG_DATA_LL24_THRESHOLD is shown in Table 11-834.

Return to the Summary Table.

Table 11-834. CFG_DATA_LL24_THRESHOLD Register Field Descriptions

Bit	Field	Type	Reset	Description
31-19	NU3	R	0h	
18-16	ll24dman	R/W	0h	If the long Packet Header is enabled, CBUFF can generate a DMA request to trigger the DMA trasnfer for the new packet 0 : Send a Request on DMA HW Req output line 0 1 : Send a Request on DMA HW Req output line 1 2 : Send a Request on DMA HW Req output line 2 3 : Send a Request on DMA HW Req output line 3 4 : Send a Request on DMA HW Req output line 4 5 : Send a Request on DMA HW Req output line 5 6 : Send a Request on DMA HW Req output line 6 7 : Do not generate dma trigger
15	NU2	R	Bh	
14-8	LL24_WR_THRESHOLD	R/W	0h	Configure the CBUFF FIFO Write threshold over which CBUFF will stall the DMA write to the CBUFF. Static configuration. This can be programmed to fixed value mentioned in the Programming Model
7	NU1	R	Bh	
6-0	LL24_RD_THRESHOLD	R/W	0h	Configure the CBUFF Read threshold to be Reached before sending the data over CSI2/LVDS and start draining the CBUFF FIFO. Static configuration. This can be programmed to fixed value mentioned in the Programming Model

Copyright © 2025 Texas Instruments Incorporated

11.2.2.3.1.87 CFG_DATA_LL25 Register (Offset = 15Ch) [Reset = 00000000h]

CFG_DATA_LL25 is shown in Table 11-835.

Return to the Summary Table.

Table 11-835. CFG_DATA_LL25 Register Field Descriptions

Bit	Field	Type	Reset	Description
31	LL25_DATA_WR_DELAY_EN	R/W	0h	TI Internal Feature CSI2 only Programming : Use the Packet Delay configured in CFG_DELAY_CONFIG. This is a Debug feature. Not requred in Programming model
30	LL25_LONG_PKT_DELAY_EN	R/W	0h	TI Internal Feature CSI2 only Programming : Use the Packet Delay configured in CFG_DELAY_CONFIG. This is a Debug feature. Not requred in Programming model
29	LL25_SHORT_PKT_DELAY_EN	R/W	0h	TI Internal Feature CSI2 only Programming : Use the Packet Delay configured in CFG_DELAY_CONFIG. This is a Debug feature. Not requred in Programming model
28	LL25_CRC_EN	R/W	0h	0 : CRC is disbaled 1 : This linklist corresponds to ADC Buffer data. Enable the CRC check from ADC Buffer to CBUFF
27	LL25_LPHDR_EN	R/W	0h	CSI2 Programming : 1 : Entry is start of a new CSI-2 packet. Send the LP Payload Header before sending data corresponind to this Linklist 0 : Link list is not the start of a Long packet but part of previous packet and hence directly send data LVDS Programming : 1 : Entry is start of a new LVDS Frame 0 : Entry is not the start of the new LVDS Frame
26	LL25_WAITFOR_PKTSENT	R/W	0h	TI Internal Feature Reserved for furture debug enhancement 1 : Wait for packet sent signal ack from CSI2 to move forward 0 : Do not wait for packet sent
25-23	LL25_BITPOS_SEL	R/W	0h	TI Internal Feature. Reserved for future use to select which of the 12-bits or 14-bits to be picked up from 16-bit CBUFF unit
22-9	LL25_SIZE	R/W	0h	Configure the Size of the data in terms of the numer of samples (not in terms of number of bytes). Sample refers to a 16 bit CBUFF Unit
8	LL25_FMT_IN	R/W	0h	0 : The incoming data sources for this Linklist is aligned to 128-bit 1 : The incoming data sources for this Linklist is aligned to 96-bit
7	LL25_FMT_MAP	R/W	0h	LVDS only : 0 : Choose CFG_LVDS_MAPPING_LANEx_FMT_0_y 1 : Choose CFG_LVDS_MAPPING_LANEx_FMT_1_y
6-5	LL25_FMT	R/W	0h	Specify the LVDS/CSI2 output format. 00 - 16bit 01 - 14-bit 10 - 12-bit
4-3	LL25_VCNUM	R/W	0h	CSI-2 : Configure the Virtual Channel Number for the Long Packet over which this data is sent
2	LL25_HS	R/W	0h	CSI-2 : 0 : Do not send an Hsync Start packet before sending this data 1 : Send an Hsync Start Packet before sending this data LVDS : 0 : Entry is not the first data of LVDS Frame 1 : Entry is the first data in the LVDS Frame
1	LL25_HE	R/W	0h	CSI-2 : 0 : Do not send an Hsync End packet after sending this data 1 : Send an Hsync End Packet after sending this data LVDS : 0 : Entry is not the last data of LVDS Frame 1 : Entry is the last data in the LVDS Frame
0	LL25_VALID	R/W	0h	0 : Linklist entry is invalid 1 : Linklist entry is valid

Copyright © 2025 Texas Instruments Incorporated

11.2.2.3.1.88 CFG_DATA_LL25_LPHDR_VAL Register (Offset = 160h) [Reset = 00000000h]

CFG_DATA_LL25_LPHDR_VAL is shown in Table 11-836.

Return to the Summary Table.

Table 11-836. CFG_DATA_LL25_LPHDR_VAL Register Field Descriptions

Bit	Field	Type	Reset	Description
31-0	LL25_LPHDR_VAL	R/W	0h	CSI-2 Programming : Configure the Long Packet Header to be sent to the Protocol Engine if the LPHDR_EN field is set for the linklist. LVDS Programming : Configure with the static value : 0xBBBBBBBB

Copyright © 2025 Texas Instruments Incorporated

11.2.2.3.1.89 CFG_DATA_LL25_THRESHOLD Register (Offset = 164h) [Reset = 0000X0X0h]

CFG_DATA_LL25_THRESHOLD is shown in Table 11-837.

Return to the Summary Table.

Table 11-837. CFG_DATA_LL25_THRESHOLD Register Field Descriptions

Bit	Field	Type	Reset	Description
31-19	NU3	R	0h	
18-16	ll25dman	R/W	0h	If the long Packet Header is enabled, CBUFF can generate a DMA request to trigger the DMA trasnfer for the new packet 0 : Send a Request on DMA HW Req output line 0 1 : Send a Request on DMA HW Req output line 1 2 : Send a Request on DMA HW Req output line 2 3 : Send a Request on DMA HW Req output line 3 4 : Send a Request on DMA HW Req output line 4 5 : Send a Request on DMA HW Req output line 5 6 : Send a Request on DMA HW Req output line 6 7 : Do not generate dma trigger
15	NU2	R	Bh	
14-8	LL25_WR_THRESHOLD	R/W	0h	Configure the CBUFF FIFO Write threshold over which CBUFF will stall the DMA write to the CBUFF. Static configuration. This can be programmed to fixed value mentioned in the Programming Model
7	NU1	R	Bh	
6-0	LL25_RD_THRESHOLD	R/W	0h	Configure the CBUFF Read threshold to be Reached before sending the data over CSI2/LVDS and start draining the CBUFF FIFO. Static configuration. This can be programmed to fixed value mentioned in the Programming Model

Copyright © 2025 Texas Instruments Incorporated

11.2.2.3.1.90 CFG_DATA_LL26 Register (Offset = 168h) [Reset = 00000000h]

CFG_DATA_LL26 is shown in Table 11-838.

Return to the Summary Table.

Table 11-838. CFG_DATA_LL26 Register Field Descriptions

Bit	Field	Type	Reset	Description
31	LL26_DATA_WR_DELAY_EN	R/W	0h	TI Internal Feature CSI2 only Programming : Use the Packet Delay configured in CFG_DELAY_CONFIG. This is a Debug feature. Not requred in Programming model
30	LL26_LONG_PKT_DELAY_EN	R/W	0h	TI Internal Feature CSI2 only Programming : Use the Packet Delay configured in CFG_DELAY_CONFIG. This is a Debug feature. Not requred in Programming model
29	LL26_SHORT_PKT_DELAY_EN	R/W	0h	TI Internal Feature CSI2 only Programming : Use the Packet Delay configured in CFG_DELAY_CONFIG. This is a Debug feature. Not requred in Programming model
28	LL26_CRC_EN	R/W	0h	0 : CRC is disbaled 1 : This linklist corresponds to ADC Buffer data. Enable the CRC check from ADC Buffer to CBUFF
27	LL26_LPHDR_EN	R/W	0h	CSI2 Programming : 1 : Entry is start of a new CSI-2 packet. Send the LP Payload Header before sending data corresponind to this Linklist 0 : Link list is not the start of a Long packet but part of previous packet and hence directly send data LVDS Programming : 1 : Entry is start of a new LVDS Frame 0 : Entry is not the start of the new LVDS Frame
26	LL26_WAITFOR_PKTSENT	R/W	0h	TI Internal Feature Reserved for furture debug enhancement 1 : Wait for packet sent signal ack from CSI2 to move forward 0 : Do not wait for packet sent
25-23	LL26_BITPOS_SEL	R/W	0h	TI Internal Feature. Reserved for future use to select which of the 12-bits or 14-bits to be picked up from 16-bit CBUFF unit
22-9	LL26_SIZE	R/W	0h	Configure the Size of the data in terms of the numer of samples (not in terms of number of bytes). Sample refers to a 16 bit CBUFF Unit
8	LL26_FMT_IN	R/W	0h	0 : The incoming data sources for this Linklist is aligned to 128-bit 1 : The incoming data sources for this Linklist is aligned to 96-bit
7	LL26_FMT_MAP	R/W	0h	LVDS only : 0 : Choose CFG_LVDS_MAPPING_LANEx_FMT_0_y 1 : Choose CFG_LVDS_MAPPING_LANEx_FMT_1_y
6-5	LL26_FMT	R/W	0h	Specify the LVDS/CSI2 output format. 00 - 16bit 01 - 14-bit 10 - 12-bit
4-3	LL26_VCNUM	R/W	0h	CSI-2 : Configure the Virtual Channel Number for the Long Packet over which this data is sent
2	LL26_HS	R/W	0h	CSI-2 : 0 : Do not send an Hsync Start packet before sending this data 1 : Send an Hsync Start Packet before sending this data LVDS : 0 : Entry is not the first data of LVDS Frame 1 : Entry is the first data in the LVDS Frame
1	LL26_HE	R/W	0h	CSI-2 : 0 : Do not send an Hsync End packet after sending this data 1 : Send an Hsync End Packet after sending this data LVDS : 0 : Entry is not the last data of LVDS Frame 1 : Entry is the last data in the LVDS Frame
0	LL26_VALID	R/W	0h	0 : Linklist entry is invalid 1 : Linklist entry is valid

Copyright © 2025 Texas Instruments Incorporated

11.2.2.3.1.91 CFG_DATA_LL26_LPHDR_VAL Register (Offset = 16Ch) [Reset = 00000000h]

CFG_DATA_LL26_LPHDR_VAL is shown in Table 11-839.

Return to the Summary Table.

Table 11-839. CFG_DATA_LL26_LPHDR_VAL Register Field Descriptions

Bit	Field	Type	Reset	Description
31-0	LL26_LPHDR_VAL	R/W	0h	CSI-2 Programming : Configure the Long Packet Header to be sent to the Protocol Engine if the LPHDR_EN field is set for the linklist. LVDS Programming : Configure with the static value : 0xBBBBBBBB

Copyright © 2025 Texas Instruments Incorporated

11.2.2.3.1.92 CFG_DATA_LL26_THRESHOLD Register (Offset = 170h) [Reset = 0000X0X0h]

CFG_DATA_LL26_THRESHOLD is shown in Table 11-840.

Return to the Summary Table.

Table 11-840. CFG_DATA_LL26_THRESHOLD Register Field Descriptions

Bit	Field	Type	Reset	Description
31-19	NU3	R	0h	
18-16	ll26dman	R/W	0h	If the long Packet Header is enabled, CBUFF can generate a DMA request to trigger the DMA trasnfer for the new packet 0 : Send a Request on DMA HW Req output line 0 1 : Send a Request on DMA HW Req output line 1 2 : Send a Request on DMA HW Req output line 2 3 : Send a Request on DMA HW Req output line 3 4 : Send a Request on DMA HW Req output line 4 5 : Send a Request on DMA HW Req output line 5 6 : Send a Request on DMA HW Req output line 6 7 : Do not generate dma trigger
15	NU2	R	Bh	
14-8	LL26_WR_THRESHOLD	R/W	0h	Configure the CBUFF FIFO Write threshold over which CBUFF will stall the DMA write to the CBUFF. Static configuration. This can be programmed to fixed value mentioned in the Programming Model
7	NU1	R	Bh	
6-0	LL26_RD_THRESHOLD	R/W	0h	Configure the CBUFF Read threshold to be Reached before sending the data over CSI2/LVDS and start draining the CBUFF FIFO. Static configuration. This can be programmed to fixed value mentioned in the Programming Model

Copyright © 2025 Texas Instruments Incorporated

11.2.2.3.1.93 CFG_DATA_LL27 Register (Offset = 174h) [Reset = 00000000h]

CFG_DATA_LL27 is shown in Table 11-841.

Return to the Summary Table.

Table 11-841. CFG_DATA_LL27 Register Field Descriptions

Bit	Field	Type	Reset	Description
31	LL27_DATA_WR_DELAY_EN	R/W	0h	TI Internal Feature CSI2 only Programming : Use the Packet Delay configured in CFG_DELAY_CONFIG. This is a Debug feature. Not requred in Programming model
30	LL27_LONG_PKT_DELAY_EN	R/W	0h	TI Internal Feature CSI2 only Programming : Use the Packet Delay configured in CFG_DELAY_CONFIG. This is a Debug feature. Not requred in Programming model
29	LL27_SHORT_PKT_DELAY_EN	R/W	0h	TI Internal Feature CSI2 only Programming : Use the Packet Delay configured in CFG_DELAY_CONFIG. This is a Debug feature. Not requred in Programming model
28	LL27_CRC_EN	R/W	0h	0 : CRC is disbaled 1 : This linklist corresponds to ADC Buffer data. Enable the CRC check from ADC Buffer to CBUFF
27	LL27_LPHDR_EN	R/W	0h	CSI2 Programming : 1 : Entry is start of a new CSI-2 packet. Send the LP Payload Header before sending data corresponind to this Linklist 0 : Link list is not the start of a Long packet but part of previous packet and hence directly send data LVDS Programming : 1 : Entry is start of a new LVDS Frame 0 : Entry is not the start of the new LVDS Frame
26	LL27_WAITFOR_PKTSENT	R/W	0h	TI Internal Feature Reserved for furture debug enhancement 1 : Wait for packet sent signal ack from CSI2 to move forward 0 : Do not wait for packet sent
25-23	LL27_BITPOS_SEL	R/W	0h	TI Internal Feature. Reserved for future use to select which of the 12-bits or 14-bits to be picked up from 16-bit CBUFF unit
22-9	LL27_SIZE	R/W	0h	Configure the Size of the data in terms of the numer of samples (not in terms of number of bytes). Sample refers to a 16 bit CBUFF Unit
8	LL27_FMT_IN	R/W	0h	0 : The incoming data sources for this Linklist is aligned to 128-bit 1 : The incoming data sources for this Linklist is aligned to 96-bit
7	LL27_FMT_MAP	R/W	0h	LVDS only : 0 : Choose CFG_LVDS_MAPPING_LANEx_FMT_0_y 1 : Choose CFG_LVDS_MAPPING_LANEx_FMT_1_y
6-5	LL27_FMT	R/W	0h	Specify the LVDS/CSI2 output format. 00 - 16bit 01 - 14-bit 10 - 12-bit
4-3	LL27_VCNUM	R/W	0h	CSI-2 : Configure the Virtual Channel Number for the Long Packet over which this data is sent
2	LL27_HS	R/W	0h	CSI-2 : 0 : Do not send an Hsync Start packet before sending this data 1 : Send an Hsync Start Packet before sending this data LVDS : 0 : Entry is not the first data of LVDS Frame 1 : Entry is the first data in the LVDS Frame
1	LL27_HE	R/W	0h	CSI-2 : 0 : Do not send an Hsync End packet after sending this data 1 : Send an Hsync End Packet after sending this data LVDS : 0 : Entry is not the last data of LVDS Frame 1 : Entry is the last data in the LVDS Frame
0	LL27_VALID	R/W	0h	0 : Linklist entry is invalid 1 : Linklist entry is valid

Copyright © 2025 Texas Instruments Incorporated

11.2.2.3.1.94 CFG_DATA_LL27_LPHDR_VAL Register (Offset = 178h) [Reset = 00000000h]

CFG_DATA_LL27_LPHDR_VAL is shown in Table 11-842.

Return to the Summary Table.

Table 11-842. CFG_DATA_LL27_LPHDR_VAL Register Field Descriptions

Bit	Field	Type	Reset	Description
31-0	LL27_LPHDR_VAL	R/W	0h	CSI-2 Programming : Configure the Long Packet Header to be sent to the Protocol Engine if the LPHDR_EN field is set for the linklist. LVDS Programming : Configure with the static value : 0xBBBBBBBB

Copyright © 2025 Texas Instruments Incorporated

11.2.2.3.1.95 CFG_DATA_LL27_THRESHOLD Register (Offset = 17Ch) [Reset = 0000X0X0h]

CFG_DATA_LL27_THRESHOLD is shown in Table 11-843.

Return to the Summary Table.

Table 11-843. CFG_DATA_LL27_THRESHOLD Register Field Descriptions

Bit	Field	Type	Reset	Description
31-19	NU3	R	0h	
18-16	ll27dman	R/W	0h	If the long Packet Header is enabled, CBUFF can generate a DMA request to trigger the DMA trasnfer for the new packet 0 : Send a Request on DMA HW Req output line 0 1 : Send a Request on DMA HW Req output line 1 2 : Send a Request on DMA HW Req output line 2 3 : Send a Request on DMA HW Req output line 3 4 : Send a Request on DMA HW Req output line 4 5 : Send a Request on DMA HW Req output line 5 6 : Send a Request on DMA HW Req output line 6 7 : Do not generate dma trigger
15	NU2	R	Bh	
14-8	LL27_WR_THRESHOLD	R/W	0h	Configure the CBUFF FIFO Write threshold over which CBUFF will stall the DMA write to the CBUFF. Static configuration. This can be programmed to fixed value mentioned in the Programming Model
7	NU1	R	Bh	
6-0	LL27_RD_THRESHOLD	R/W	0h	Configure the CBUFF Read threshold to be Reached before sending the data over CSI2/LVDS and start draining the CBUFF FIFO. Static configuration. This can be programmed to fixed value mentioned in the Programming Model

Copyright © 2025 Texas Instruments Incorporated

11.2.2.3.1.96 CFG_DATA_LL28 Register (Offset = 180h) [Reset = 00000000h]

CFG_DATA_LL28 is shown in Table 11-844.

Return to the Summary Table.

Table 11-844. CFG_DATA_LL28 Register Field Descriptions

Bit	Field	Type	Reset	Description
31	LL28_DATA_WR_DELAY_EN	R/W	0h	TI Internal Feature CSI2 only Programming : Use the Packet Delay configured in CFG_DELAY_CONFIG. This is a Debug feature. Not requred in Programming model
30	LL28_LONG_PKT_DELAY_EN	R/W	0h	TI Internal Feature CSI2 only Programming : Use the Packet Delay configured in CFG_DELAY_CONFIG. This is a Debug feature. Not requred in Programming model
29	LL28_SHORT_PKT_DELAY_EN	R/W	0h	TI Internal Feature CSI2 only Programming : Use the Packet Delay configured in CFG_DELAY_CONFIG. This is a Debug feature. Not requred in Programming model
28	LL28_CRC_EN	R/W	0h	0 : CRC is disbaled 1 : This linklist corresponds to ADC Buffer data. Enable the CRC check from ADC Buffer to CBUFF
27	LL28_LPHDR_EN	R/W	0h	CSI2 Programming : 1 : Entry is start of a new CSI-2 packet. Send the LP Payload Header before sending data corresponind to this Linklist 0 : Link list is not the start of a Long packet but part of previous packet and hence directly send data LVDS Programming : 1 : Entry is start of a new LVDS Frame 0 : Entry is not the start of the new LVDS Frame
26	LL28_WAITFOR_PKTSENT	R/W	0h	TI Internal Feature Reserved for furture debug enhancement 1 : Wait for packet sent signal ack from CSI2 to move forward 0 : Do not wait for packet sent
25-23	LL28_BITPOS_SEL	R/W	0h	TI Internal Feature. Reserved for future use to select which of the 12-bits or 14-bits to be picked up from 16-bit CBUFF unit
22-9	LL28_SIZE	R/W	0h	Configure the Size of the data in terms of the numer of samples (not in terms of number of bytes). Sample refers to a 16 bit CBUFF Unit
8	LL28_FMT_IN	R/W	0h	0 : The incoming data sources for this Linklist is aligned to 128-bit 1 : The incoming data sources for this Linklist is aligned to 96-bit
7	LL28_FMT_MAP	R/W	0h	LVDS only : 0 : Choose CFG_LVDS_MAPPING_LANEx_FMT_0_y 1 : Choose CFG_LVDS_MAPPING_LANEx_FMT_1_y
6-5	LL28_FMT	R/W	0h	Specify the LVDS/CSI2 output format. 00 - 16bit 01 - 14-bit 10 - 12-bit
4-3	LL28_VCNUM	R/W	0h	CSI-2 : Configure the Virtual Channel Number for the Long Packet over which this data is sent
2	LL28_HS	R/W	0h	CSI-2 : 0 : Do not send an Hsync Start packet before sending this data 1 : Send an Hsync Start Packet before sending this data LVDS : 0 : Entry is not the first data of LVDS Frame 1 : Entry is the first data in the LVDS Frame
1	LL28_HE	R/W	0h	CSI-2 : 0 : Do not send an Hsync End packet after sending this data 1 : Send an Hsync End Packet after sending this data LVDS : 0 : Entry is not the last data of LVDS Frame 1 : Entry is the last data in the LVDS Frame
0	LL28_VALID	R/W	0h	0 : Linklist entry is invalid 1 : Linklist entry is valid

Copyright © 2025 Texas Instruments Incorporated

11.2.2.3.1.97 CFG_DATA_LL28_LPHDR_VAL Register (Offset = 184h) [Reset = 00000000h]

CFG_DATA_LL28_LPHDR_VAL is shown in Table 11-845.

Return to the Summary Table.

Table 11-845. CFG_DATA_LL28_LPHDR_VAL Register Field Descriptions

Bit	Field	Type	Reset	Description
31-0	LL28_LPHDR_VAL	R/W	0h	CSI-2 Programming : Configure the Long Packet Header to be sent to the Protocol Engine if the LPHDR_EN field is set for the linklist. LVDS Programming : Configure with the static value : 0xBBBBBBBB

Copyright © 2025 Texas Instruments Incorporated

11.2.2.3.1.98 CFG_DATA_LL28_THRESHOLD Register (Offset = 188h) [Reset = 0000X0X0h]

CFG_DATA_LL28_THRESHOLD is shown in Table 11-846.

Return to the Summary Table.

Table 11-846. CFG_DATA_LL28_THRESHOLD Register Field Descriptions

Bit	Field	Type	Reset	Description
31-19	NU3	R	0h	
18-16	ll28dman	R/W	0h	If the long Packet Header is enabled, CBUFF can generate a DMA request to trigger the DMA trasnfer for the new packet 0 : Send a Request on DMA HW Req output line 0 1 : Send a Request on DMA HW Req output line 1 2 : Send a Request on DMA HW Req output line 2 3 : Send a Request on DMA HW Req output line 3 4 : Send a Request on DMA HW Req output line 4 5 : Send a Request on DMA HW Req output line 5 6 : Send a Request on DMA HW Req output line 6 7 : Do not generate dma trigger
15	NU2	R	Bh	
14-8	LL28_WR_THRESHOLD	R/W	0h	Configure the CBUFF FIFO Write threshold over which CBUFF will stall the DMA write to the CBUFF. Static configuration. This can be programmed to fixed value mentioned in the Programming Model
7	NU1	R	Bh	
6-0	LL28_RD_THRESHOLD	R/W	0h	Configure the CBUFF Read threshold to be Reached before sending the data over CSI2/LVDS and start draining the CBUFF FIFO. Static configuration. This can be programmed to fixed value mentioned in the Programming Model

Copyright © 2025 Texas Instruments Incorporated

11.2.2.3.1.99 CFG_DATA_LL29 Register (Offset = 18Ch) [Reset = 00000000h]

CFG_DATA_LL29 is shown in Table 11-847.

Return to the Summary Table.

Table 11-847. CFG_DATA_LL29 Register Field Descriptions

Bit	Field	Type	Reset	Description
31	LL29_DATA_WR_DELAY_EN	R/W	0h	TI Internal Feature CSI2 only Programming : Use the Packet Delay configured in CFG_DELAY_CONFIG. This is a Debug feature. Not requred in Programming model
30	LL29_LONG_PKT_DELAY_EN	R/W	0h	TI Internal Feature CSI2 only Programming : Use the Packet Delay configured in CFG_DELAY_CONFIG. This is a Debug feature. Not requred in Programming model
29	LL29_SHORT_PKT_DELAY_EN	R/W	0h	TI Internal Feature CSI2 only Programming : Use the Packet Delay configured in CFG_DELAY_CONFIG. This is a Debug feature. Not requred in Programming model
28	LL29_CRC_EN	R/W	0h	0 : CRC is disbaled 1 : This linklist corresponds to ADC Buffer data. Enable the CRC check from ADC Buffer to CBUFF
27	LL29_LPHDR_EN	R/W	0h	CSI2 Programming : 1 : Entry is start of a new CSI-2 packet. Send the LP Payload Header before sending data corresponind to this Linklist 0 : Link list is not the start of a Long packet but part of previous packet and hence directly send data LVDS Programming : 1 : Entry is start of a new LVDS Frame 0 : Entry is not the start of the new LVDS Frame
26	LL29_WAITFOR_PKTSENT	R/W	0h	TI Internal Feature Reserved for furture debug enhancement 1 : Wait for packet sent signal ack from CSI2 to move forward 0 : Do not wait for packet sent
25-23	LL29_BITPOS_SEL	R/W	0h	TI Internal Feature. Reserved for future use to select which of the 12-bits or 14-bits to be picked up from 16-bit CBUFF unit
22-9	LL29_SIZE	R/W	0h	Configure the Size of the data in terms of the numer of samples (not in terms of number of bytes). Sample refers to a 16 bit CBUFF Unit
8	LL29_FMT_IN	R/W	0h	0 : The incoming data sources for this Linklist is aligned to 128-bit 1 : The incoming data sources for this Linklist is aligned to 96-bit
7	LL29_FMT_MAP	R/W	0h	LVDS only : 0 : Choose CFG_LVDS_MAPPING_LANEx_FMT_0_y 1 : Choose CFG_LVDS_MAPPING_LANEx_FMT_1_y
6-5	LL29_FMT	R/W	0h	Specify the LVDS/CSI2 output format. 00 - 16bit 01 - 14-bit 10 - 12-bit
4-3	LL29_VCNUM	R/W	0h	CSI-2 : Configure the Virtual Channel Number for the Long Packet over which this data is sent
2	LL29_HS	R/W	0h	CSI-2 : 0 : Do not send an Hsync Start packet before sending this data 1 : Send an Hsync Start Packet before sending this data LVDS : 0 : Entry is not the first data of LVDS Frame 1 : Entry is the first data in the LVDS Frame
1	LL29_HE	R/W	0h	CSI-2 : 0 : Do not send an Hsync End packet after sending this data 1 : Send an Hsync End Packet after sending this data LVDS : 0 : Entry is not the last data of LVDS Frame 1 : Entry is the last data in the LVDS Frame
0	LL29_VALID	R/W	0h	0 : Linklist entry is invalid 1 : Linklist entry is valid

Copyright © 2025 Texas Instruments Incorporated

11.2.2.3.1.100 CFG_DATA_LL29_LPHDR_VAL Register (Offset = 190h) [Reset = 00000000h]

CFG_DATA_LL29_LPHDR_VAL is shown in Table 11-848.

Return to the Summary Table.

Table 11-848. CFG_DATA_LL29_LPHDR_VAL Register Field Descriptions

Bit	Field	Type	Reset	Description
31-0	LL29_LPHDR_VAL	R/W	0h	CSI-2 Programming : Configure the Long Packet Header to be sent to the Protocol Engine if the LPHDR_EN field is set for the linklist. LVDS Programming : Configure with the static value : 0xBBBBBBBB

Copyright © 2025 Texas Instruments Incorporated

11.2.2.3.1.101 CFG_DATA_LL29_THRESHOLD Register (Offset = 194h) [Reset = 0000X0X0h]

CFG_DATA_LL29_THRESHOLD is shown in Table 11-849.

Return to the Summary Table.

Table 11-849. CFG_DATA_LL29_THRESHOLD Register Field Descriptions

Bit	Field	Type	Reset	Description
31-19	NU3	R	0h	
18-16	ll29dman	R/W	0h	If the long Packet Header is enabled, CBUFF can generate a DMA request to trigger the DMA trasnfer for the new packet 0 : Send a Request on DMA HW Req output line 0 1 : Send a Request on DMA HW Req output line 1 2 : Send a Request on DMA HW Req output line 2 3 : Send a Request on DMA HW Req output line 3 4 : Send a Request on DMA HW Req output line 4 5 : Send a Request on DMA HW Req output line 5 6 : Send a Request on DMA HW Req output line 6 7 : Do not generate dma trigger
15	NU2	R	Bh	
14-8	LL29_WR_THRESHOLD	R/W	0h	Configure the CBUFF FIFO Write threshold over which CBUFF will stall the DMA write to the CBUFF. Static configuration. This can be programmed to fixed value mentioned in the Programming Model
7	NU1	R	Bh	
6-0	LL29_RD_THRESHOLD	R/W	0h	Configure the CBUFF Read threshold to be Reached before sending the data over CSI2/LVDS and start draining the CBUFF FIFO. Static configuration. This can be programmed to fixed value mentioned in the Programming Model

Copyright © 2025 Texas Instruments Incorporated

11.2.2.3.1.102 CFG_DATA_LL30 Register (Offset = 198h) [Reset = 00000000h]

CFG_DATA_LL30 is shown in Table 11-850.

Return to the Summary Table.

Table 11-850. CFG_DATA_LL30 Register Field Descriptions

Bit	Field	Type	Reset	Description
31	LL30_DATA_WR_DELAY_EN	R/W	0h	TI Internal Feature CSI2 only Programming : Use the Packet Delay configured in CFG_DELAY_CONFIG. This is a Debug feature. Not requred in Programming model
30	LL30_LONG_PKT_DELAY_EN	R/W	0h	TI Internal Feature CSI2 only Programming : Use the Packet Delay configured in CFG_DELAY_CONFIG. This is a Debug feature. Not requred in Programming model
29	LL30_SHORT_PKT_DELAY_EN	R/W	0h	TI Internal Feature CSI2 only Programming : Use the Packet Delay configured in CFG_DELAY_CONFIG. This is a Debug feature. Not requred in Programming model
28	LL30_CRC_EN	R/W	0h	0 : CRC is disbaled 1 : This linklist corresponds to ADC Buffer data. Enable the CRC check from ADC Buffer to CBUFF
27	LL30_LPHDR_EN	R/W	0h	CSI2 Programming : 1 : Entry is start of a new CSI-2 packet. Send the LP Payload Header before sending data corresponind to this Linklist 0 : Link list is not the start of a Long packet but part of previous packet and hence directly send data LVDS Programming : 1 : Entry is start of a new LVDS Frame 0 : Entry is not the start of the new LVDS Frame
26	LL30_WAITFOR_PKTSENT	R/W	0h	TI Internal Feature Reserved for furture debug enhancement 1 : Wait for packet sent signal ack from CSI2 to move forward 0 : Do not wait for packet sent
25-23	LL30_BITPOS_SEL	R/W	0h	TI Internal Feature. Reserved for future use to select which of the 12-bits or 14-bits to be picked up from 16-bit CBUFF unit
22-9	LL30_SIZE	R/W	0h	Configure the Size of the data in terms of the numer of samples (not in terms of number of bytes). Sample refers to a 16 bit CBUFF Unit
8	LL30_FMT_IN	R/W	0h	0 : The incoming data sources for this Linklist is aligned to 128-bit 1 : The incoming data sources for this Linklist is aligned to 96-bit
7	LL30_FMT_MAP	R/W	0h	LVDS only : 0 : Choose CFG_LVDS_MAPPING_LANEx_FMT_0_y 1 : Choose CFG_LVDS_MAPPING_LANEx_FMT_1_y
6-5	LL30_FMT	R/W	0h	Specify the LVDS/CSI2 output format. 00 - 16bit 01 - 14-bit 10 - 12-bit
4-3	LL30_VCNUM	R/W	0h	CSI-2 : Configure the Virtual Channel Number for the Long Packet over which this data is sent
2	LL30_HS	R/W	0h	CSI-2 : 0 : Do not send an Hsync Start packet before sending this data 1 : Send an Hsync Start Packet before sending this data LVDS : 0 : Entry is not the first data of LVDS Frame 1 : Entry is the first data in the LVDS Frame
1	LL30_HE	R/W	0h	CSI-2 : 0 : Do not send an Hsync End packet after sending this data 1 : Send an Hsync End Packet after sending this data LVDS : 0 : Entry is not the last data of LVDS Frame 1 : Entry is the last data in the LVDS Frame
0	LL30_VALID	R/W	0h	0 : Linklist entry is invalid 1 : Linklist entry is valid

Copyright © 2025 Texas Instruments Incorporated

11.2.2.3.1.103 CFG_DATA_LL30_LPHDR_VAL Register (Offset = 19Ch) [Reset = 00000000h]

CFG_DATA_LL30_LPHDR_VAL is shown in Table 11-851.

Return to the Summary Table.

Table 11-851. CFG_DATA_LL30_LPHDR_VAL Register Field Descriptions

Bit	Field	Type	Reset	Description
31-0	LL30_LPHDR_VAL	R/W	0h	CSI-2 Programming : Configure the Long Packet Header to be sent to the Protocol Engine if the LPHDR_EN field is set for the linklist. LVDS Programming : Configure with the static value : 0xBBBBBBBB

Copyright © 2025 Texas Instruments Incorporated

11.2.2.3.1.104 CFG_DATA_LL30_THRESHOLD Register (Offset = 1A0h) [Reset = 0000X0X0h]

CFG_DATA_LL30_THRESHOLD is shown in Table 11-852.

Return to the Summary Table.

Table 11-852. CFG_DATA_LL30_THRESHOLD Register Field Descriptions

Bit	Field	Type	Reset	Description
31-19	NU3	R	0h	
18-16	ll30dman	R/W	0h	If the long Packet Header is enabled, CBUFF can generate a DMA request to trigger the DMA trasnfer for the new packet 0 : Send a Request on DMA HW Req output line 0 1 : Send a Request on DMA HW Req output line 1 2 : Send a Request on DMA HW Req output line 2 3 : Send a Request on DMA HW Req output line 3 4 : Send a Request on DMA HW Req output line 4 5 : Send a Request on DMA HW Req output line 5 6 : Send a Request on DMA HW Req output line 6 7 : Do not generate dma trigger
15	NU2	R	Bh	
14-8	LL30_WR_THRESHOLD	R/W	0h	Configure the CBUFF FIFO Write threshold over which CBUFF will stall the DMA write to the CBUFF. Static configuration. This can be programmed to fixed value mentioned in the Programming Model
7	NU1	R	Bh	
6-0	LL30_RD_THRESHOLD	R/W	0h	Configure the CBUFF Read threshold to be Reached before sending the data over CSI2/LVDS and start draining the CBUFF FIFO. Static configuration. This can be programmed to fixed value mentioned in the Programming Model

Copyright © 2025 Texas Instruments Incorporated

11.2.2.3.1.105 CFG_DATA_LL31 Register (Offset = 1A4h) [Reset = 00000000h]

CFG_DATA_LL31 is shown in Table 11-853.

Return to the Summary Table.

Table 11-853. CFG_DATA_LL31 Register Field Descriptions

Bit	Field	Type	Reset	Description
31	LL31_DATA_WR_DELAY_EN	R/W	0h	TI Internal Feature CSI2 only Programming : Use the Packet Delay configured in CFG_DELAY_CONFIG. This is a Debug feature. Not requred in Programming model
30	LL31_LONG_PKT_DELAY_EN	R/W	0h	TI Internal Feature CSI2 only Programming : Use the Packet Delay configured in CFG_DELAY_CONFIG. This is a Debug feature. Not requred in Programming model
29	LL31_SHORT_PKT_DELAY_EN	R/W	0h	TI Internal Feature CSI2 only Programming : Use the Packet Delay configured in CFG_DELAY_CONFIG. This is a Debug feature. Not requred in Programming model
28	LL31_CRC_EN	R/W	0h	0 : CRC is disbaled 1 : This linklist corresponds to ADC Buffer data. Enable the CRC check from ADC Buffer to CBUFF
27	LL31_LPHDR_EN	R/W	0h	CSI2 Programming : 1 : Entry is start of a new CSI-2 packet. Send the LP Payload Header before sending data corresponind to this Linklist 0 : Link list is not the start of a Long packet but part of previous packet and hence directly send data LVDS Programming : 1 : Entry is start of a new LVDS Frame 0 : Entry is not the start of the new LVDS Frame
26	LL31_WAITFOR_PKTSENT	R/W	0h	TI Internal Feature Reserved for furture debug enhancement 1 : Wait for packet sent signal ack from CSI2 to move forward 0 : Do not wait for packet sent
25-23	LL31_BITPOS_SEL	R/W	0h	TI Internal Feature. Reserved for future use to select which of the 12-bits or 14-bits to be picked up from 16-bit CBUFF unit
22-9	LL31_SIZE	R/W	0h	Configure the Size of the data in terms of the numer of samples (not in terms of number of bytes). Sample refers to a 16 bit CBUFF Unit
8	LL31_FMT_IN	R/W	0h	0 : The incoming data sources for this Linklist is aligned to 128-bit 1 : The incoming data sources for this Linklist is aligned to 96-bit
7	LL31_FMT_MAP	R/W	0h	LVDS only : 0 : Choose CFG_LVDS_MAPPING_LANEx_FMT_0_y 1 : Choose CFG_LVDS_MAPPING_LANEx_FMT_1_y
6-5	LL31_FMT	R/W	0h	Specify the LVDS/CSI2 output format. 00 - 16bit 01 - 14-bit 10 - 12-bit
4-3	LL31_VCNUM	R/W	0h	CSI-2 : Configure the Virtual Channel Number for the Long Packet over which this data is sent
2	LL31_HS	R/W	0h	CSI-2 : 0 : Do not send an Hsync Start packet before sending this data 1 : Send an Hsync Start Packet before sending this data LVDS : 0 : Entry is not the first data of LVDS Frame 1 : Entry is the first data in the LVDS Frame
1	LL31_HE	R/W	0h	CSI-2 : 0 : Do not send an Hsync End packet after sending this data 1 : Send an Hsync End Packet after sending this data LVDS : 0 : Entry is not the last data of LVDS Frame 1 : Entry is the last data in the LVDS Frame
0	LL31_VALID	R/W	0h	0 : Linklist entry is invalid 1 : Linklist entry is valid

Copyright © 2025 Texas Instruments Incorporated

11.2.2.3.1.106 CFG_DATA_LL31_LPHDR_VAL Register (Offset = 1A8h) [Reset = 00000000h]

CFG_DATA_LL31_LPHDR_VAL is shown in Table 11-854.

Return to the Summary Table.

Table 11-854. CFG_DATA_LL31_LPHDR_VAL Register Field Descriptions

Bit	Field	Type	Reset	Description
31-0	LL31_LPHDR_VAL	R/W	0h	CSI-2 Programming : Configure the Long Packet Header to be sent to the Protocol Engine if the LPHDR_EN field is set for the linklist. LVDS Programming : Configure with the static value : 0xBBBBBBBB

Copyright © 2025 Texas Instruments Incorporated

11.2.2.3.1.107 CFG_DATA_LL31_THRESHOLD Register (Offset = 1ACh) [Reset = 0000X0X0h]

CFG_DATA_LL31_THRESHOLD is shown in Table 11-855.

Return to the Summary Table.

Table 11-855. CFG_DATA_LL31_THRESHOLD Register Field Descriptions

Bit	Field	Type	Reset	Description
31-19	NU3	R	0h	
18-16	ll31dman	R/W	0h	If the long Packet Header is enabled, CBUFF can generate a DMA request to trigger the DMA trasnfer for the new packet 0 : Send a Request on DMA HW Req output line 0 1 : Send a Request on DMA HW Req output line 1 2 : Send a Request on DMA HW Req output line 2 3 : Send a Request on DMA HW Req output line 3 4 : Send a Request on DMA HW Req output line 4 5 : Send a Request on DMA HW Req output line 5 6 : Send a Request on DMA HW Req output line 6 7 : Do not generate dma trigger
15	NU2	R	Bh	
14-8	LL31_WR_THRESHOLD	R/W	0h	Configure the CBUFF FIFO Write threshold over which CBUFF will stall the DMA write to the CBUFF. Static configuration. This can be programmed to fixed value mentioned in the Programming Model
7	NU1	R	Bh	
6-0	LL31_RD_THRESHOLD	R/W	0h	Configure the CBUFF Read threshold to be Reached before sending the data over CSI2/LVDS and start draining the CBUFF FIFO. Static configuration. This can be programmed to fixed value mentioned in the Programming Model

Copyright © 2025 Texas Instruments Incorporated

11.2.2.3.1.108 CFG_LVDS_MAPPING_LANE0_FMT_0 Register (Offset = 1B0h) [Reset = 00000000h]

CFG_LVDS_MAPPING_LANE0_FMT_0 is shown in Table 11-856.

Return to the Summary Table.

Table 11-856. CFG_LVDS_MAPPING_LANE0_FMT_0 Register Field Descriptions

Bit	Field	Type	Reset	Description
31-28	CFG_LVDS_MAPPING_LANE0_FMT_0_H	R/W	0h	Lane 0 mapping if Format 0 is selected. Bit [2:0] : 0-7 : Selects the CBUFF unit from the 8 CBUFF units to be sent on Lane 0 Bit 3 0 : Entry is not valid 1 : Entry is valid Please refer to LVDS Mapping Format in Programming model for more details
27-24	CFG_LVDS_MAPPING_LANE0_FMT_0_G	R/W	0h	Lane 0 mapping if Format 0 is selected. Bit [2:0] : 0-7 : Selects the CBUFF unit from the 8 CBUFF units to be sent on Lane 0 Bit 3 0 : Entry is not valid 1 : Entry is valid Please refer to LVDS Mapping Format in Programming model for more details
23-20	CFG_LVDS_MAPPING_LANE0_FMT_0_F	R/W	0h	Lane 0 mapping if Format 0 is selected. Bit [2:0] : 0-7 : Selects the CBUFF unit from the 8 CBUFF units to be sent on Lane 0 Bit 3 0 : Entry is not valid 1 : Entry is valid Please refer to LVDS Mapping Format in Programming model for more details
19-16	CFG_LVDS_MAPPING_LANE0_FMT_0_E	R/W	0h	Lane 0 mapping if Format 0 is selected. Bit [2:0] : 0-7 : Selects the CBUFF unit from the 8 CBUFF units to be sent on Lane 0 Bit 3 0 : Entry is not valid 1 : Entry is valid Please refer to LVDS Mapping Format in Programming model for more details
15-12	CFG_LVDS_MAPPING_LANE0_FMT_0_D	R/W	0h	Lane 0 mapping if Format 0 is selected. Bit [2:0] : 0-7 : Selects the CBUFF unit from the 8 CBUFF units to be sent on Lane 0 Bit 3 0 : Entry is not valid 1 : Entry is valid Please refer to LVDS Mapping Format in Programming model for more details
11-8	CFG_LVDS_MAPPING_LANE0_FMT_0_C	R/W	0h	Lane 0 mapping if Format 0 is selected. Bit [2:0] : 0-7 : Selects the CBUFF unit from the 8 CBUFF units to be sent on Lane 0 Bit 3 0 : Entry is not valid 1 : Entry is valid Please refer to LVDS Mapping Format in Programming model for more details
7-4	CFG_LVDS_MAPPING_LANE0_FMT_0_B	R/W	0h	Lane 0 mapping if Format 0 is selected. Bit [2:0] : 0-7 : Selects the CBUFF unit from the 8 CBUFF units to be sent on Lane 0 Bit 3 0 : Entry is not valid 1 : Entry is valid Please refer to LVDS Mapping Format in Programming model for more details
3-0	CFG_LVDS_MAPPING_LANE0_FMT_0_A	R/W	0h	Lane 0 mapping if Format 0 is selected. Bit [2:0] : 0-7 : Selects the CBUFF unit from the 8 CBUFF units to be sent on Lane 0 Bit 3 0 : Entry is not valid 1 : Entry is valid Please refer to LVDS Mapping Format in Programming model for more details

Copyright © 2025 Texas Instruments Incorporated

11.2.2.3.1.109 CFG_LVDS_MAPPING_LANE1_FMT_0 Register (Offset = 1B4h) [Reset = 00000000h]

CFG_LVDS_MAPPING_LANE1_FMT_0 is shown in Table 11-857.

Return to the Summary Table.

Table 11-857. CFG_LVDS_MAPPING_LANE1_FMT_0 Register Field Descriptions

Bit	Field	Type	Reset	Description
31-28	CFG_LVDS_MAPPING_LANE1_FMT_0_H	R/W	0h	Lane 1 mapping if Format 0 is selected. Bit [2:0] : 0-7 : Selects the CBUFF unit from the 8 CBUFF units to be sent on Lane 1 Bit 3 0 : Entry is not valid 1 : Entry is valid Please refer to LVDS Mapping Format in Programming model for more details
27-24	CFG_LVDS_MAPPING_LANE1_FMT_0_G	R/W	0h	Lane 1 mapping if Format 0 is selected. Bit [2:0] : 0-7 : Selects the CBUFF unit from the 8 CBUFF units to be sent on Lane 1 Bit 3 0 : Entry is not valid 1 : Entry is valid Please refer to LVDS Mapping Format in Programming model for more details
23-20	CFG_LVDS_MAPPING_LANE1_FMT_0_F	R/W	0h	Lane 1 mapping if Format 0 is selected. Bit [2:0] : 0-7 : Selects the CBUFF unit from the 8 CBUFF units to be sent on Lane 1 Bit 3 0 : Entry is not valid 1 : Entry is valid Please refer to LVDS Mapping Format in Programming model for more details
19-16	CFG_LVDS_MAPPING_LANE1_FMT_0_E	R/W	0h	Lane 1 mapping if Format 0 is selected. Bit [2:0] : 0-7 : Selects the CBUFF unit from the 8 CBUFF units to be sent on Lane 1 Bit 3 0 : Entry is not valid 1 : Entry is valid Please refer to LVDS Mapping Format in Programming model for more details
15-12	CFG_LVDS_MAPPING_LANE1_FMT_0_D	R/W	0h	Lane 1 mapping if Format 0 is selected. Bit [2:0] : 0-7 : Selects the CBUFF unit from the 8 CBUFF units to be sent on Lane 1 Bit 3 0 : Entry is not valid 1 : Entry is valid Please refer to LVDS Mapping Format in Programming model for more details
11-8	CFG_LVDS_MAPPING_LANE1_FMT_0_C	R/W	0h	Lane 1 mapping if Format 0 is selected. Bit [2:0] : 0-7 : Selects the CBUFF unit from the 8 CBUFF units to be sent on Lane 1 Bit 3 0 : Entry is not valid 1 : Entry is valid Please refer to LVDS Mapping Format in Programming model for more details
7-4	CFG_LVDS_MAPPING_LANE1_FMT_0_B	R/W	0h	Lane 1 mapping if Format 0 is selected. Bit [2:0] : 0-7 : Selects the CBUFF unit from the 8 CBUFF units to be sent on Lane 1 Bit 3 0 : Entry is not valid 1 : Entry is valid Please refer to LVDS Mapping Format in Programming model for more details
3-0	CFG_LVDS_MAPPING_LANE1_FMT_0_A	R/W	0h	Lane 1 mapping if Format 0 is selected. Bit [2:0] : 0-7 : Selects the CBUFF unit from the 8 CBUFF units to be sent on Lane 1 Bit 3 0 : Entry is not valid 1 : Entry is valid Please refer to LVDS Mapping Format in Programming model for more details

Copyright © 2025 Texas Instruments Incorporated

11.2.2.3.1.110 CFG_LVDS_MAPPING_LANE2_FMT_0 Register (Offset = 1B8h) [Reset = 00000000h]

CFG_LVDS_MAPPING_LANE2_FMT_0 is shown in Table 11-858.

Return to the Summary Table.

Table 11-858. CFG_LVDS_MAPPING_LANE2_FMT_0 Register Field Descriptions

Bit	Field	Type	Reset	Description
31-28	CFG_LVDS_MAPPING_LANE2_FMT_0_H	R/W	0h	Please refer to LVDS Mapping Format section for confiuration details
27-24	CFG_LVDS_MAPPING_LANE2_FMT_0_G	R/W	0h	Please refer to LVDS Mapping Format section for confiuration details
23-20	CFG_LVDS_MAPPING_LANE2_FMT_0_F	R/W	0h	Please refer to LVDS Mapping Format section for confiuration details
19-16	CFG_LVDS_MAPPING_LANE2_FMT_0_E	R/W	0h	Please refer to LVDS Mapping Format section for confiuration details
15-12	CFG_LVDS_MAPPING_LANE2_FMT_0_D	R/W	0h	Please refer to LVDS Mapping Format section for confiuration details
11-8	CFG_LVDS_MAPPING_LANE2_FMT_0_C	R/W	0h	Please refer to LVDS Mapping Format section for confiuration details
7-4	CFG_LVDS_MAPPING_LANE2_FMT_0_B	R/W	0h	Please refer to LVDS Mapping Format section for confiuration details
3-0	CFG_LVDS_MAPPING_LANE2_FMT_0_A	R/W	0h	Please refer to LVDS Mapping Format section for confiuration details

Copyright © 2025 Texas Instruments Incorporated

11.2.2.3.1.111 CFG_LVDS_MAPPING_LANE3_FMT_0 Register (Offset = 1BCh) [Reset = 00000000h]

CFG_LVDS_MAPPING_LANE3_FMT_0 is shown in Table 11-859.

Return to the Summary Table.

Table 11-859. CFG_LVDS_MAPPING_LANE3_FMT_0 Register Field Descriptions

Bit	Field	Type	Reset	Description
31-28	CFG_LVDS_MAPPING_LANE3_FMT_0_H	R/W	0h	Please refer to LVDS Mapping Format section for confiuration details
27-24	CFG_LVDS_MAPPING_LANE3_FMT_0_G	R/W	0h	Please refer to LVDS Mapping Format section for confiuration details
23-20	CFG_LVDS_MAPPING_LANE3_FMT_0_F	R/W	0h	Please refer to LVDS Mapping Format section for confiuration details
19-16	CFG_LVDS_MAPPING_LANE3_FMT_0_E	R/W	0h	Please refer to LVDS Mapping Format section for confiuration details
15-12	CFG_LVDS_MAPPING_LANE3_FMT_0_D	R/W	0h	Please refer to LVDS Mapping Format section for confiuration details
11-8	CFG_LVDS_MAPPING_LANE3_FMT_0_C	R/W	0h	Please refer to LVDS Mapping Format section for confiuration details
7-4	CFG_LVDS_MAPPING_LANE3_FMT_0_B	R/W	0h	Please refer to LVDS Mapping Format section for confiuration details
3-0	CFG_LVDS_MAPPING_LANE3_FMT_0_A	R/W	0h	Please refer to LVDS Mapping Format section for confiuration details

Copyright © 2025 Texas Instruments Incorporated

11.2.2.3.1.112 CFG_LVDS_MAPPING_LANE0_FMT_1 Register (Offset = 1C0h) [Reset = 00000000h]

CFG_LVDS_MAPPING_LANE0_FMT_1 is shown in Table 11-860.

Return to the Summary Table.

Table 11-860. CFG_LVDS_MAPPING_LANE0_FMT_1 Register Field Descriptions

Bit	Field	Type	Reset	Description
31-28	CFG_LVDS_MAPPING_LANE0_FMT_1_H	R/W	0h	Please refer to LVDS Mapping Format section for confiuration details
27-24	CFG_LVDS_MAPPING_LANE0_FMT_1_G	R/W	0h	Please refer to LVDS Mapping Format section for confiuration details
23-20	CFG_LVDS_MAPPING_LANE0_FMT_1_F	R/W	0h	Please refer to LVDS Mapping Format section for confiuration details
19-16	CFG_LVDS_MAPPING_LANE0_FMT_1_E	R/W	0h	Please refer to LVDS Mapping Format section for confiuration details
15-12	CFG_LVDS_MAPPING_LANE0_FMT_1_D	R/W	0h	Please refer to LVDS Mapping Format section for confiuration details
11-8	CFG_LVDS_MAPPING_LANE0_FMT_1_C	R/W	0h	Please refer to LVDS Mapping Format section for confiuration details
7-4	CFG_LVDS_MAPPING_LANE0_FMT_1_B	R/W	0h	Please refer to LVDS Mapping Format section for confiuration details
3-0	CFG_LVDS_MAPPING_LANE0_FMT_1_A	R/W	0h	Please refer to LVDS Mapping Format section for confiuration details

Copyright © 2025 Texas Instruments Incorporated

11.2.2.3.1.113 CFG_LVDS_MAPPING_LANE1_FMT_1 Register (Offset = 1C4h) [Reset = 00000000h]

CFG_LVDS_MAPPING_LANE1_FMT_1 is shown in Table 11-861.

Return to the Summary Table.

Table 11-861. CFG_LVDS_MAPPING_LANE1_FMT_1 Register Field Descriptions

Bit	Field	Type	Reset	Description
31-28	CFG_LVDS_MAPPING_LANE1_FMT_1_H	R/W	0h	Please refer to LVDS Mapping Format section for confiuration details
27-24	CFG_LVDS_MAPPING_LANE1_FMT_1_G	R/W	0h	Please refer to LVDS Mapping Format section for confiuration details
23-20	CFG_LVDS_MAPPING_LANE1_FMT_1_F	R/W	0h	Please refer to LVDS Mapping Format section for confiuration details
19-16	CFG_LVDS_MAPPING_LANE1_FMT_1_E	R/W	0h	Please refer to LVDS Mapping Format section for confiuration details
15-12	CFG_LVDS_MAPPING_LANE1_FMT_1_D	R/W	0h	Please refer to LVDS Mapping Format section for confiuration details
11-8	CFG_LVDS_MAPPING_LANE1_FMT_1_C	R/W	0h	Please refer to LVDS Mapping Format section for confiuration details
7-4	CFG_LVDS_MAPPING_LANE1_FMT_1_B	R/W	0h	Please refer to LVDS Mapping Format section for confiuration details
3-0	CFG_LVDS_MAPPING_LANE1_FMT_1_A	R/W	0h	Please refer to LVDS Mapping Format section for confiuration details

Copyright © 2025 Texas Instruments Incorporated

11.2.2.3.1.114 CFG_LVDS_MAPPING_LANE2_FMT_1 Register (Offset = 1C8h) [Reset = 00000000h]

CFG_LVDS_MAPPING_LANE2_FMT_1 is shown in Table 11-862.

Return to the Summary Table.

Table 11-862. CFG_LVDS_MAPPING_LANE2_FMT_1 Register Field Descriptions

Bit	Field	Type	Reset	Description
31-28	CFG_LVDS_MAPPING_LANE2_FMT_1_H	R/W	0h	Please refer to LVDS Mapping Format section for confiuration details
27-24	CFG_LVDS_MAPPING_LANE2_FMT_1_G	R/W	0h	Please refer to LVDS Mapping Format section for confiuration details
23-20	CFG_LVDS_MAPPING_LANE2_FMT_1_F	R/W	0h	Please refer to LVDS Mapping Format section for confiuration details
19-16	CFG_LVDS_MAPPING_LANE2_FMT_1_E	R/W	0h	Please refer to LVDS Mapping Format section for confiuration details
15-12	CFG_LVDS_MAPPING_LANE2_FMT_1_D	R/W	0h	Please refer to LVDS Mapping Format section for confiuration details
11-8	CFG_LVDS_MAPPING_LANE2_FMT_1_C	R/W	0h	Please refer to LVDS Mapping Format section for confiuration details
7-4	CFG_LVDS_MAPPING_LANE2_FMT_1_B	R/W	0h	Please refer to LVDS Mapping Format section for confiuration details
3-0	CFG_LVDS_MAPPING_LANE2_FMT_1_A	R/W	0h	Please refer to LVDS Mapping Format section for confiuration details

Copyright © 2025 Texas Instruments Incorporated

11.2.2.3.1.115 CFG_LVDS_MAPPING_LANE3_FMT_1 Register (Offset = 1CCh) [Reset = 00000000h]

CFG_LVDS_MAPPING_LANE3_FMT_1 is shown in Table 11-863.

Return to the Summary Table.

Table 11-863. CFG_LVDS_MAPPING_LANE3_FMT_1 Register Field Descriptions

Bit	Field	Type	Reset	Description
31-28	CFG_LVDS_MAPPING_LANE3_FMT_1_H	R/W	0h	Please refer to LVDS Mapping Format section for confiuration details
27-24	CFG_LVDS_MAPPING_LANE3_FMT_1_G	R/W	0h	Please refer to LVDS Mapping Format section for confiuration details
23-20	CFG_LVDS_MAPPING_LANE3_FMT_1_F	R/W	0h	Please refer to LVDS Mapping Format section for confiuration details
19-16	CFG_LVDS_MAPPING_LANE3_FMT_1_E	R/W	0h	Please refer to LVDS Mapping Format section for confiuration details
15-12	CFG_LVDS_MAPPING_LANE3_FMT_1_D	R/W	0h	Please refer to LVDS Mapping Format section for confiuration details
11-8	CFG_LVDS_MAPPING_LANE3_FMT_1_C	R/W	0h	Please refer to LVDS Mapping Format section for confiuration details
7-4	CFG_LVDS_MAPPING_LANE3_FMT_1_B	R/W	0h	Please refer to LVDS Mapping Format section for confiuration details
3-0	CFG_LVDS_MAPPING_LANE3_FMT_1_A	R/W	0h	Please refer to LVDS Mapping Format section for confiuration details

Copyright © 2025 Texas Instruments Incorporated

11.2.2.3.1.116 CFG_LVDS_GEN_0 Register (Offset = 1D0h) [Reset = 00000000h]

CFG_LVDS_GEN_0 is shown in Table 11-864.

Return to the Summary Table.

Table 11-864. CFG_LVDS_GEN_0 Register Field Descriptions

Bit	Field	Type	Reset	Description
31-30	cpz	R/W	0h	LVDS Clock config. 1 : Clock alignment enabled Others : Internal clock alignment not enabled This needs to be set to 0x1 for correct functionality
29	cblpen	R/W	0h	TI Internal CFG_LASTPULSE_EN
28	cbcrcen	R/W	0h	LVDS Frame CRC 0 : CRC is not sent at the end of LVDS Frame 1 : CRC is sent at the end of the LVDS Frame
27-24	cfdly	R/W	0h	LVDS FIFO Initial Threshold. This is a Static configuration and sould be set to a fixed value as mention in the Programming model
23	cmsbf	R/W	0h	1 : Data is sent out on the LVDS lane MSB first 0 : Data is sent out on the LVDS lane LSB first
22	cpossel	R/W	0h	0 : When a new chirp is starting, align first sample start to negedge of DDR clock. 1 : When a new chirp is starting, align first sample start to posedge of DDR clock (recommended)
21-16	cckdiv	R/W	0h	TI Internal feature. CFG_LVDS_CLK_DIV
15	cclksel1	R/W	0h	TRM Description : 0 : DDR mode clock mux 1 : SDR mode clock mux TI Restricted Description : CFG_LVDS_CLK_SEL1 0-> Use div-by-2 (Q2 path) 1 -> Used for direct (Q1 path)
14	cclksel	R/W	0h	TI Internal feature. CFG_LVDS_CLK_SEL (between div-by-N and CLK_HSI_DIG) 1 -> CLK_HSI_DIG 0 - through div-by-N (N is programmed in CFG_LVDS_CLK_DIV)
13-12	ckchar	R/W	0h	TI Internal feature. CFG_K_CHAR_SEL
11	ccsmen	R/W	0h	TRM Description : As per alignment TI Restricted Description : 0 : Regular operation 1 : Continuous Streaming Mode Enabled (Not supported internally also in AR16xx)
10	CFG_BIT_CLK_MODE	R/W	0h	Bit Clock Mode 0 : SDR clocking mode 1 : DDR clocking mode
9-8	CFG_LINE_MODE	R/W	0h	TI Internal feature. Reserved.
7	cpkfmt	R/W	0h	TI Internal feature. CFG_PACK_FORMAT: While packing in 12/14 bit whether to use CSI like packing or general packing.
6	cacdsel	R/W	0h	TI Internal feature. CFG_ALL_CHL_READY_DELAY_SEL This bit is added to take of the fast to slow transition in the ADC Buffer. 0 => If the LVDS clock frequency (SDR) is >= 200MHz 1 => If the LVDS clock frequency (SDR) is < 200MHz
5	ctc2en	R/W	0h	TI Internal feature. 0 : Regular operation 1: TC2MODE Enable (Not supported internally also in AR16xx)
4	CFG_8B10B_EN	R/W	0h	TI Internal Feature. Reserved. For Furture enhancement. Not supported in this version 0 : No encoding 1: 8B10B encoding
3	CFG_LVDS_LANE3_EN	R/W	0h	LVDS only programming : 0 : LVDS Lane 3 is disbaled 1 : LVDS Lane 3 is enabled

Copyright © 2025 Texas Instruments Incorporated

Table 11-864. CFG_LVDS_GEN_0 Register Field Descriptions (continued)

Bit	Field	Type	Reset	Description
2	CFG_LVDS_LANE2_EN	R/W	0h	LVDS only programming : 0 : LVDS Lane 2 is disbaled 1 : LVDS Lane 2 is enabled
1	CFG_LVDS_LANE1_EN	R/W	0h	LVDS only programming : 0 : LVDS Lane 1 is disbaled 1 : LVDS Lane 1 is enabled
0	CFG_LVDS_LANE0_EN	R/W	0h	LVDS only programming : 0 : LVDS Lane 0 is disbaled 1 : LVDS Lane 0 is enabled

Copyright © 2025 Texas Instruments Incorporated

11.2.2.3.1.117 CFG_LVDS_GEN_1 Register (Offset = 1D4h) [Reset = 000000XXh]

CFG_LVDS_GEN_1 is shown in Table 11-865.

Return to the Summary Table.

Table 11-865. CFG_LVDS_GEN_1 Register Field Descriptions

Bit	Field	Type	Reset	Description
31-19	NU2	R	0h	RESERVED
18	cgbcen	R/W	0h	TI Internal Feature. 0 : Bit clk is free running 1 : Bit clk is valid only during the valid frame.
17	cfcpol	R/W	0h	TI Internal Feature. 0 : During IDLE, Frame clock will be 0. Start of the valid sample is indicated by the rise edge 1 : During IDLE. Frame clock will be 1. Start of the valid sample is indicated by the fall edge.
16	clfven	R/W	0h	TI Internal feature. Extend the Single Ended Frame Valid When the frame_valid is used as a single ended signal, then make this 1. 0 : Regular Operation. Frame Valid will exactly match with the valid data. 1 : The frame_valid would start early by about 10 lvds_clk (internal) and would extend beyond by 10 lvds_clk (internal) after the end of the frame
15-14	ctpsel3	R/W	0h	TI Internal feature. This is used when Test Pattern Generation Enabled is enabled. 0 :Incremental pattern - For Lane 3
13-12	ctpsel2	R/W	0h	TI Internal feature. This is used when Test Pattern Generation Enabled is enabled. 0 :Incremental pattern - For Lane 2
11-10	ctpsel1	R/W	0h	TI Internal feature. This is used when Test Pattern Generation Enabled is enabled. 0 :Incremental pattern - For Lane 1
9-8	ctpsel0	R/W	0h	TI Internal feature. This is used when Test Pattern Generation Enabled is enabled. 0 :Incremental pattern - For Lane 0
7	NU1	R	Bh	RESERVED
6-4	ctiddly	R/W	0h	TI Internal feature. Configure the skew delay in terms on number of cycles
3	NU3	R	Bh	
2	c3c3l	R/W	0h	LVDS Only Programming: 0 : Regular Operation 1 : Enable 3Ch-3Lane mode in LVDS. Refer to Programming model for more details
1	csdrinv	R/W	0h	TI Internal feature. Configure the clock inversion during SDR mode. 0 : No inversion 1 : Inversion
0	ctpen	R/W	0h	TI Internal feature. 0 : Regular Operation 1 : LVDS Testpattern Enable

Copyright © 2025 Texas Instruments Incorporated

11.2.2.3.1.118 CFG_LVDS_GEN_2 Register (Offset = 1D8h) [Reset = 00000000h]

CFG_LVDS_GEN_2 is shown in Table 11-866.

Return to the Summary Table.

Table 11-866. CFG_LVDS_GEN_2 Register Field Descriptions

Bit	Field	Type	Reset	Description
31-0	CFG_LVDS_GEN_2	R/W	0h	CFG_LVDS_GEN_2[0]: Configure LSB/MSB first for CRC. This feature is supported only when the field CFG_LVDS_GEN_0[28] is set to 1 0 -> The calculated value of 32-bit Ethernet polynomial CRC is swapped and sent out, clear this bit if data is set to LSB first (CFG_LVDS_GEN_0[23]=0) but CRC should be MSB first or vice-versa 1 -> The calculated value of 32-bit Ethernet polynomial CRC is sent out without swapping, set this bit if both data and CRC should have same format (LSB/MSB first) CFG_LVDS_GEN_2[1]: Configure value of frame clock during inter frame period 0 -> Frame clock is held low 1 -> Frame clock is held high CFG_LVDS_GEN_2[2]: Configure frame clock period. This feature is supported only when the field CFG_LVDS_GEN_0[28] is set to 1 0 -> 32-bit CRC is transmitted as single packet with frame clock set to 16h16l (16 high 16 low) configuration 1 -> 32-bit CRC is transmitted as two packets with frame clock set to 8h8l (8 high 8 low) configuration for each packet CFG_LVDS_GEN_2[3]: Configure bit clock during inter frame period 0 -> Bit clock toggles during inter frame period 1 -> Bit clock does not toggle during inter frame period, the value of bit clock is held low This feature is supported when DDR clock is selected (CFG_LVDS_GEN_0[10]=1) and first data sample is driven on posedge of DDR clock (CFG_LVDS_GEN_0[22]=1) CFG_LVDS_GEN_2[4]: Configure CRC inversion. This feature is supported only when the field CFG_LVDS_GEN_0[28] is set to 1 0 -> The calculated value of 32-bit Ethernet polynomial CRC is inverted and sent out 1 -> The calculated value of 32-bit Ethernet polynomial CRC is sent out without inversion CFG_LVDS_GEN_2[5]: Enable/disable the calibration mode, in this mode frame clock will follow data lane[0] 0 -> Calibration mode is disabled 1 -> Calibration mode is enabled

Copyright © 2025 Texas Instruments Incorporated

11.2.2.3.1.119 CFG_MASK_REG0 Register (Offset = 1DCh) [Reset = 00000000h]

CFG_MASK_REG0 is shown in Table 11-867.

Return to the Summary Table.

Table 11-867. CFG_MASK_REG0 Register Field Descriptions

Bit	Field	Type	Reset	Description
31-0	CFG_MASK_REG0	R/W	0h	Mask Register field corresponding to STAT_CBUFF_REG0. Refer STAT_CBUFF_REG0 for bitwise mapping. 0 : Event is unmasked and will cause an interrupt on occuruence 1 : Event is masked. No interrupt will be generated on occurrence

Copyright © 2025 Texas Instruments Incorporated

11.2.2.3.1.120 CFG_MASK_REG1 Register (Offset = 1E0h) [Reset = 00000000h]

CFG_MASK_REG1 is shown in Table 11-868.

Return to the Summary Table.

Table 11-868. CFG_MASK_REG1 Register Field Descriptions

Bit	Field	Type	Reset	Description
31-0	CFG_MASK_REG1	R/W	0h	Mask Register field corresponding to STAT_CBUFF_REG1. Refer STAT_CBUFF_REG1 for bitwise mapping. 0 : Event is unmasked and will cause an interrupt on occuruence 1 : Event is masked. No interrupt will be generated on occurrence

Copyright © 2025 Texas Instruments Incorporated

11.2.2.3.1.121 CFG_MASK_REG2 Register (Offset = 1E4h) [Reset = 00000000h]

CFG_MASK_REG2 is shown in Table 11-869.

Return to the Summary Table.

Table 11-869. CFG_MASK_REG2 Register Field Descriptions

Bit	Field	Type	Reset	Description
31-0	CFG_MASK_REG2	R/W	0h	Mask Register field corresponding to STAT_LVDS_REG0. Refer STAT_LVDS_REG0 for bitwise mapping. 0 : Event is unmasked and will cause an interrupt on occuruence 1 : Event is masked. No interrupt will be generated on occurrence

Copyright © 2025 Texas Instruments Incorporated

11.2.2.3.1.122 CFG_MASK_REG3 Register (Offset = 1E8h) [Reset = 00000000h]

CFG_MASK_REG3 is shown in Table 11-870.

Return to the Summary Table.

Table 11-870. CFG_MASK_REG3 Register Field Descriptions

Bit	Field	Type	Reset	Description
31-0	CFG_MASK_REG3	R/W	0h	RESERVED

Copyright © 2025 Texas Instruments Incorporated

11.2.2.3.1.123 STAT_CBUFF_REG0 Register (Offset = 1ECh) [Reset = 00000000h]

STAT_CBUFF_REG0 is shown in Table 11-871.

Return to the Summary Table.

Table 11-871. STAT_CBUFF_REG0 Register Field Descriptions

Bit	Field	Type	Reset	Description
31-13	STAT_CBUFF_REG0_OTHERS	R	0h	Reseved for future enhancement
12	S_FRAME_DONE	R	0h	Indicates that CBUFF has completed sending out data for the current Frame
11	S_CHIRP_DONE	R	0h	Indicates that CBUFF has completed sending out data for the current Chirp
10-6	S_LL_INDEX	R	0h	TI Internal Feature. Debug only. Current Linked list index.
5	S_CSI_PKT_LP_RCVD_STATE	R	0h	TI Internal Feature Indicates that the CSI-2 Packet Received is sent to the CBUFF from the Protocol Engine after Long Data Packet
4	S_CSI_PKT_HE_RCVD_STATE	R	0h	TI Internal Feature Indicates that the CSI-2 Packet Received is sent to the CBUFF from the Protocol Engine after Hsync End Packet
3	S_CSI_PKT_HS_RCVD_STATE	R	0h	TI Internal Feature Indicates that the CSI-2 Packet Received is sent to the CBUFF from the Protocol Engine after Hsync Start Packet
2	S_CSI_PKT_VE_RCVD_STATE	R	0h	TI Internal Feature Indicates that the CSI-2 Packet Received is sent to the CBUFF from the Protocol Engine after Vsync End Packet
1	S_CSI_PKT_VS_RCVD_STATE	R	0h	TI Internal Feature Indicates that the CSI-2 Packet Received is sent to the CBUFF from the Protocol Engine after Vsync Start Packet
0	S_CSI_PKT_RCVD	R	0h	TI Internal Feature Indicates that the CSI-2 Packet Received is sent to the CBUFF from the Protocol Engine

Copyright © 2025 Texas Instruments Incorporated

11.2.2.3.1.124 STAT_CBUFF_REG1 Register (Offset = 1F0h) [Reset = 00000000h]

STAT_CBUFF_REG1 is shown in Table 11-872.

Return to the Summary Table.

Table 11-872. STAT_CBUFF_REG1 Register Field Descriptions

Bit	Field	Type	Reset	Description
31-21	S1_UNUSED3	R	0h	
20	S_CBFIFO_READY_IN_FSM	R	0h	TI Internal Feature. Debug only. cbuff-fifo_ready - Keep this masked. Not relevant.
19	S_CBFIFO_EMPTY_IN_FSM	R	0h	TI Internal Feature. Debug only. cbuff-fifo_empty - Keep this masked. Not relevant.
18	S_PKTRCV_ERR	R	0h	TI Internal Feature. Debug only. If the packetReceived arrives at a wrong time. It should NOT be coming while in IDLE state (as no packet was sent before) and in HIBER state (where the next LL group is being evaluated).
17	S_FRAME_ERR	R	0h	Indicates the FrameStart arrived before CBUFF has completed sending out data for all the Chirps programmed
16	S_CHIRP_ERR	R	0h	Indicates tha the chirpAvailable from ADCBuffer arrived before CBUFF has completed sending out the previous Chirp data.
15-12	S1_UNUSED2	R	0h	RESERVED
11	S_CBFIFO_EMPTY	R	0h	TI Internal Feature. Debug only. CBUFF_FIFO Empty Status – Keep this masked, since full and empty will be normal conditions.
10	S_CBFIFO_FULL	R	0h	TI Internal Feature. Debug only. CBUFF_FIFO Full Status – Keep this masked, since full and empty will be normal conditions.
9	S_CBPUSH_ERR	R	0h	TI Internal Feature. Debug only. CBUFF_FIFO_PUSH_ERROR
8	S_CBPOP_ERR	R	0h	TI Internal Feature. Debug only. CBUFF_FIFO_POP_ERROR
7-3	S1_UNUSED1	R	0h	RESERVED
2	S_LCLPUSH_ERR	R	0h	TI Internal Feature. Debug only. LCL_FIFO_PUSH_ERROR
1	S_LCLPOP_ERR	R	0h	TI Internal Feature. Debug only. LCL_FIFO_POP_ERROR
0	S_LCLFSM_ERR	R	0h	TI Internal Feature. Debug only. LCL_FIFO_FSM_ERROR

Copyright © 2025 Texas Instruments Incorporated

11.2.2.3.1.125 STAT_CBUFF_REG2 Register (Offset = 1F4h) [Reset = 00000000h]

STAT_CBUFF_REG2 is shown in Table 11-873.

Return to the Summary Table.

Table 11-873. STAT_CBUFF_REG2 Register Field Descriptions

Bit	Field	Type	Reset	Description
31-0	STAT_CBUFF_REG2	R	0h	RESERVED. This does not have coresponding clear or mask

Copyright © 2025 Texas Instruments Incorporated

11.2.2.3.1.126 STAT_CBUFF_REG3 Register (Offset = 1F8h) [Reset = 00000000h]

STAT_CBUFF_REG3 is shown in Table 11-874.

Return to the Summary Table.

Table 11-874. STAT_CBUFF_REG3 Register Field Descriptions

Bit	Field	Type	Reset	Description
31-0	STAT_CBUFF_REG3	R	0h	RESERVED. This does not have coresponding clear or mask

Copyright © 2025 Texas Instruments Incorporated

11.2.2.3.1.127 STAT_LVDS_REG0 Register (Offset = 1FCh) [Reset = 00000000h]

STAT_LVDS_REG0 is shown in Table 11-875.

Return to the Summary Table.

Table 11-875. STAT_LVDS_REG0 Register Field Descriptions

Bit	Field	Type	Reset	Description
31-0	STAT_LVDS_REG0	R	0h	TI Internal Feature. Debug only. Clr is CLR_LVDS_REG0 and MASK is CFG_MASK_REG2 FSM_STAT_CODE: [3:0] is for Ch0, [7:4] is for Ch1, [11:8] is for Ch2, [15:12] is for ch3 ASYNC_FIFO_STATUS: [19:16] is for Ch0, [23:20] is for Ch1, [27:24] is for Ch2, [32:28] is for ch3 FSM_STATE_CODE : Using this the states can be decoded. ASYNC_FIFO_STATUS: 0 - POP_ERROR 1 - PUSH_ERROR 2- POP_EMPTY 3 - PUSH_FULL. Set the mask for POP_EMPTY and PUSH_FULL. These are normal conditions and will keep happening and need not generate any interrupt

Copyright © 2025 Texas Instruments Incorporated

11.2.2.3.1.128 STAT_LVDS_REG1 Register (Offset = 200h) [Reset = 00000000h]

STAT_LVDS_REG1 is shown in Table 11-876.

Return to the Summary Table.

Table 11-876. STAT_LVDS_REG1 Register Field Descriptions

Bit	Field	Type	Reset	Description
31-0	STAT_LVDS_REG1	R	0h	RESERVED

Copyright © 2025 Texas Instruments Incorporated

11.2.2.3.1.129 STAT_LVDS_REG2 Register (Offset = 204h) [Reset = 00000000h]

STAT_LVDS_REG2 is shown in Table 11-877.

Return to the Summary Table.

Table 11-877. STAT_LVDS_REG2 Register Field Descriptions

Bit	Field	Type	Reset	Description
31-0	STAT_LVDS_REG2	R	0h	RESERVED

Copyright © 2025 Texas Instruments Incorporated

11.2.2.3.1.130 STAT_LVDS_REG3 Register (Offset = 208h) [Reset = 00000000h]

STAT_LVDS_REG3 is shown in Table 11-878.

Return to the Summary Table.

Table 11-878. STAT_LVDS_REG3 Register Field Descriptions

Bit	Field	Type	Reset	Description
31-0	STAT_LVDS_REG3	R	0h	RESERVED

Copyright © 2025 Texas Instruments Incorporated

11.2.2.3.1.131 CLR_CBUFF_REG0 Register (Offset = 20Ch) [Reset = 00000000h]

CLR_CBUFF_REG0 is shown in Table 11-879.

Return to the Summary Table.

Table 11-879. CLR_CBUFF_REG0 Register Field Descriptions

Bit	Field	Type	Reset	Description
31-13	CLR_CBUFF_REG0_OTHERS	TI Internal Feature.Clear Register field corresponding to STAT_CBUFF_REG0. Write 0x1 to Clear the field		
12	C_FRAME_DONE	Clear Register field corresponding to STAT_CBUFF_REG0. Write 0x1 to Clear the field		
11	C_CHIRP_DONE	Clear Register field corresponding to STAT_CBUFF_REG0. Write 0x1 to Clear the field		
10-6	C_LL_INDEX	TI Internal Feature.Clear Register field corresponding to STAT_CBUFF_REG0. Write 0x1 to Clear the field		
5	C_CSI_PKT_LP_RCVD_STATE	TI Internal Feature.Clear Register field corresponding to STAT_CBUFF_REG0. Write 0x1 to Clear the field		

Copyright © 2025 Texas Instruments Incorporated

Table 11-879. CLR_CBUFF_REG0 Register Field Descriptions (continued)

Bit	Field	Type	Reset	Description
4	C_CSI_PKT_HE_RCVD_STATE	TI Internal Feature.Clear Register field corresponding to STAT_CBUFF_REG0. Write 0x1 to Clear the field		
3	C_CSI_PKT_HS_RCVD_STATE	TI Internal Feature.Clear Register field corresponding to STAT_CBUFF_REG0. Write 0x1 to Clear the field		
2	C_CSI_PKT_VE_RCVD_STATE	TI Internal Feature.Clear Register field corresponding to STAT_CBUFF_REG0. Write 0x1 to Clear the field		
1	C_CSI_PKT_VS_RCVD_STATE	TI Internal Feature.Clear Register field corresponding to STAT_CBUFF_REG0. Write 0x1 to Clear the field		
0	C_CSI_PKT_RCVD	TI Internal Feature. Clear Register field corresponding to STAT_CBUFF_REG0. Write 0x1 to Clear the field		

Copyright © 2025 Texas Instruments Incorporated

11.2.2.3.1.132 CLR_CBUFF_REG1 Register (Offset = 210h) [Reset = 00000000h]

CLR_CBUFF_REG1 is shown in Table 11-880.

Return to the Summary Table.

Table 11-880. CLR_CBUFF_REG1 Register Field Descriptions

Bit	Field	Type	Reset	Description
31-0	CLR_CBUFF_REG1	TI Internal Feature.Clear Register field corresponding to STAT_CBUFF_REG1. Write 0x1 to Clear the field		

Copyright © 2025 Texas Instruments Incorporated

11.2.2.3.1.133 CLR_LVDS_REG0 Register (Offset = 214h) [Reset = 00000000h]

CLR_LVDS_REG0 is shown in Table 11-881.

Return to the Summary Table.

Table 11-881. CLR_LVDS_REG0 Register Field Descriptions

Bit	Field	Type	Reset	Description
31-0	CLR_LVDS_REG0	TI Internal Feature.Clear Register field corresponding to STAT_LVDS_REG0. Write 0x1 to Clear the field		

Copyright © 2025 Texas Instruments Incorporated

11.2.2.3.1.134 CLR_LVDS_REG1 Register (Offset = 218h) [Reset = 00000000h]

CLR_LVDS_REG1 is shown in Table 11-882.

Return to the Summary Table.

Table 11-882. CLR_LVDS_REG1 Register Field Descriptions

Bit	Field	Type	Reset	Description
31-0	CLR_LVDS_REG1	RESERVED		

Copyright © 2025 Texas Instruments Incorporated

11.2.2.3.1.135 STAT_CBUFF_ECC_REG Register (Offset = 21Ch) [Reset = 00000000h]

STAT_CBUFF_ECC_REG is shown in Table 11-883.

Return to the Summary Table.

Table 11-883. STAT_CBUFF_ECC_REG Register Field Descriptions

Bit	Field	Type	Reset	Description
31-10	NU2	R	Bh	
9	seccdbe	R	0h	0 : No Double bit error 1 : Indicates a double bit error has occurred
8	seccsbe	R	0h	0 : No Single bit error 1 : Indicates a single bit error has occurred
7-6	NU1	R	0h	
5-0	seccadd	R	0h	6-bit address where the ECC error occurred. It is valid when either seccsbe or seccdbe is set. If none of them is set, then the addr does not mean anything.

Copyright © 2025 Texas Instruments Incorporated

11.2.2.3.1.136 MASK_CBUFF_ECC_REG Register (Offset = 220h) [Reset = 00000000h]

MASK_CBUFF_ECC_REG is shown in Table 11-884.

Return to the Summary Table.

Table 11-884. MASK_CBUFF_ECC_REG Register Field Descriptions

Bit	Field	Type	Reset	Description
31-10	NU2	R	Bh	
9	meccdbe	R/W	0h	0 : Double bit error indications are unmasked 1 : Double bit error indications are Masked
8	meccsbe	R/W	0h	0 : Single bit error indications are unmasked 1 : Single bit error indications are Masked
7-0	NU1	R	0h	

Copyright © 2025 Texas Instruments Incorporated

11.2.2.3.1.137 CLR_CBUFF_ECC_REG Register (Offset = 224h) [Reset = 00000000h]

CLR_CBUFF_ECC_REG is shown in Table 11-885.

Return to the Summary Table.

Table 11-885. CLR_CBUFF_ECC_REG Register Field Descriptions

Bit	Field	Type	Reset	Description
31-10	NU2	R	Bh	
9	ceccdbe	Clear Register field corresponding to STAT_CBUFF_ECC. Write 0x1 to Clear the field		
8	ceccsbe	Clear Register field corresponding to STAT_CBUFF_ECC. Write 0x1 to Clear the field		
7-1	NU1	R	0h	
0	ceccadd	Clear Register field corresponding to STAT_CBUFF_ECC. Write 0x1 to Clear the field		

Copyright © 2025 Texas Instruments Incorporated

11.2.2.3.1.138 STAT_SAFETY Register (Offset = 228h) [Reset = 00000000h]

STAT_SAFETY is shown in Table 11-886.

Return to the Summary Table.

Table 11-886. STAT_SAFETY Register Field Descriptions

Bit	Field	Type	Reset	Description
31-9	SAF_UNUSED1	R	0h	RESERVED
8	SAF_CHIRP_ERR	R	0h	Safety Error. Indicates tha the chirpAvailable from ADCBuffer arrived before CBUFF has completed sending out the previous Chirp data.
7-0	SAF_CRC	R	0h	TRM Desccription : Indicates a CRC error between ADCBuffer and CBUFF. 0 : No Error Non Zero : Error TI Restricted Description : 0 - CRC for col-0 - [15:0], 1 - CRC for col-1 [31:16] 2 - CRC for col-2 [47:32] 3 - CRC for col-3 [63:48] 4 - CRC for col-4 - [79:64] 5 - CRC for col-5 [95:80] 6 - CRC for col-6 [111 :96 7 - for col-7 [127:112]

Copyright © 2025 Texas Instruments Incorporated

11.2.2.3.1.139 MASK_SAFETY Register (Offset = 22Ch) [Reset = 00000000h]

MASK_SAFETY is shown in Table 11-887.

Return to the Summary Table.

Table 11-887. MASK_SAFETY Register Field Descriptions

Bit	Field	Type	Reset	Description
31-0	MASK_SAFETY	R/W	0h	Mask Register field corresponding to STAT_SAFETY. Refer STAT_SAFETY for bitwise mapping. 0 : Event is unmasked and will cause an interrupt on occuruence 1 : Event is masked. No interrupt will be generated on occurrence

Copyright © 2025 Texas Instruments Incorporated

11.2.2.3.1.140 CLR_SAFETY Register (Offset = 230h) [Reset = 00000000h]

CLR_SAFETY is shown in Table 11-888.

Return to the Summary Table.

Table 11-888. CLR_SAFETY Register Field Descriptions

Bit	Field	Type	Reset	Description
31-0	CLR_SAFETY	Clear Register field corresponding to STAT_SAFETY. Write 0x1 to Clear the field		

11.2.3 MDO/Aurora

11.2.3.1 Measurement Data Output Infrastructure

11.2.3.1.1 MDO Infra Design Overview

MDO is used to capture the transactions on the bus connected from different interfaces of the AM273x device and transmitted outside over LVDS (4-data lanes). MDO is comprised of a sniffer, FIFO, and aggregator, which are explained in following sections.

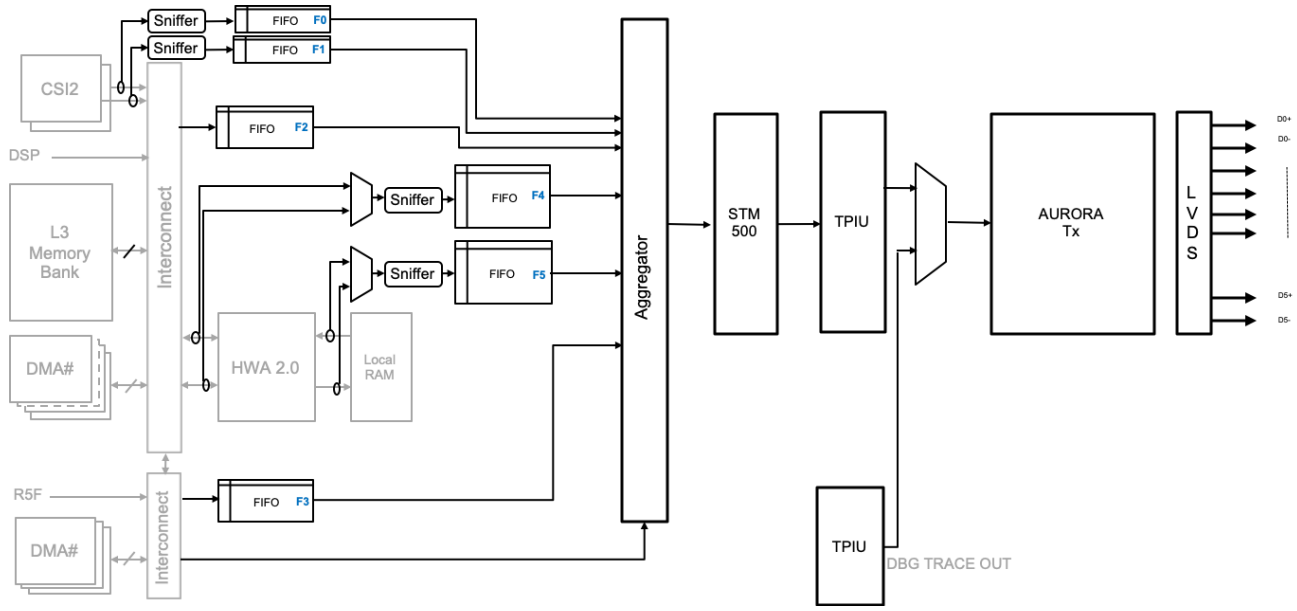

Figure 11-154. MDO Diagram

As depicted in above figure, the sniffer can access the data from the the CSI2 receiver, L3 memory, DMA, HWA, and from local RAM, which are then sent to the aggregator.

11.2.3.1.2 MDO Sniffer

11.2.3.1.2.1 Overview

The MDO sniffer module is responsible for monitoring the hardware interfaces in the SoC and capturing the transactions on the bus which are within the configured addressing region of interest, and writing the transaction details into a FIFO.

Copyright © 2025 Texas Instruments Incorporated

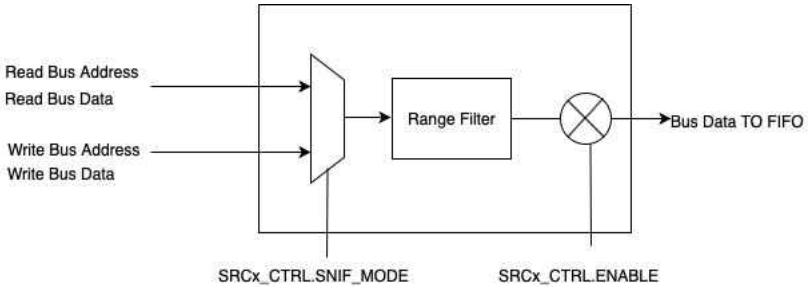

Figure 11-155. MDO Sniffer

The sniffer module can sniff a bus interface and filter transfers to be sent to the MDO FIFO.

Table 11-889. MDO Source Address Range Selection

Start Address	End Address	Range Enable
TOP_MDO_INFRA:SRCx_RANGE_START0	TOP_MDO_INFRA:SRCx_RANGE_END0	TOP_MDO_INFRA:SRCx_CTRL.RANGE_EN[0]
TOP_MDO_INFRA:SRCx_RANGE_START1	TOP_MDO_INFRA:SRCx_RANGE_END1	TOP_MDO_INFRA:SRCx_CTRL.RANGE_EN[1]
TOP_MDO_INFRA:SRCx_RANGE_START2	TOP_MDO_INFRA:SRCx_RANGE_END2	TOP_MDO_INFRA:SRCx_CTRL.RANGE_EN[2]
TOP_MDO_INFRA:SRCx_RANGE_START3	TOP_MDO_INFRA:SRCx_RANGE_END3	TOP_MDO_INFRA:SRCx_CTRL.RANGE_EN[3]

- Read OR Write interface can be selected based on the configuration TOP_MDO_INFRA.SRCx_CTRL.SNIF_MODE
- The address/paramset is used to filter transactions.
- Only the data bus is captured. Range is not sent to the FIFO.
- On completion of configuration, the sniffer can be enabled by writing 0x1 to TOP_MDO_INFRA:SRCx_CTRL.ENABLE.
- If TOP_MDO_INFRA:SRCx_CTRL.CROP_EN is set to 0x1, then for every 32 bits of DATA[31:0], DATA[27:16], and DATA[11:0] is written to the FIFO (24 bits).

11.2.3.1.3 MDO FIFO Master

11.2.3.1.3.1 Overview

The data from MDO sniffer accumulates in the FIFO. When a threshold is reached, the data is sent out to the aggregator as a burst transfer.

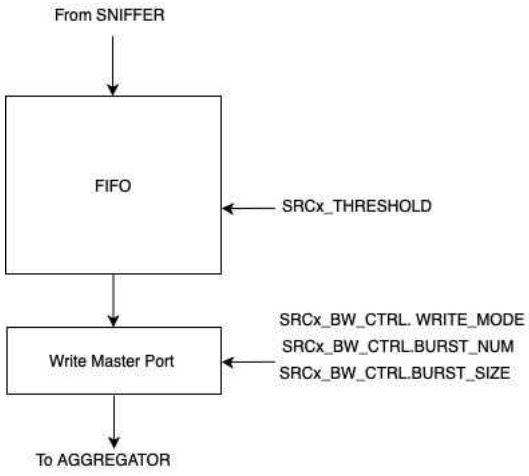

Figure 11-156. MDO FIFO Master

Copyright © 2025 Texas Instruments Incorporated

- When SRC0_BW_CTRL Register (Offset = 40h) [Reset = X] .WRITE_MODE is 0x0, then the data is sent out as a burst where the burst size is the THRESHOLD.
- When SRC0_BW_CTRL Register (Offset = 40h) [Reset = X] .WRITE_MODE is 0x1, then the data is sent out as a series of bursts of count BURST_NUM each of size BURST_SIZE.

11.2.3.1.3.2 Sniffer Marker Generation

An MDO source can inject a marker indicator along with its data. A marker indicator is sent to the STM module to generate a FLAG or FLAG_TS.

A marker indicator can be injected into the source stream by:

- A hardware event when register field SRC0_CTRL Register (Offset = 14h) [Reset = X] :HW_MARKER_EN is 0x1
- Software writing to the register field SRC0_SW_TRIGGER Register (Offset = 38h) [Reset = X] :MARKER

If SRCx_CHANNEL_CFG_NONDATA_TIMESTAMPED is set, then the STM is written to generate a FLAG_TS packet; else, a FLAG packet is generated.

An MDO source can inject a flush indicator in its data stream. A flush causes all the previous data in the FIFO to be sent to the STM irrespective of the threshold.

A flush indicator can be injected into the source stream by:

- A hardware event when register field SRC0_CTRL Register (Offset = 14h) [Reset = X] :HW_FLUSH_EN is 0x1
- Software writing to the register fieldSRC0_SW_TRIGGER Register (Offset = 38h) [Reset = X] :FLUSH

11.2.3.1.3.3 Sniffer Flush Operation

On a flush request, the MDO FIFO Master empties the FIFO, irrespective of the threshold. Any new data in the FIFO is not drained and is sent out only when the threshold is reached or a new flush request is received.

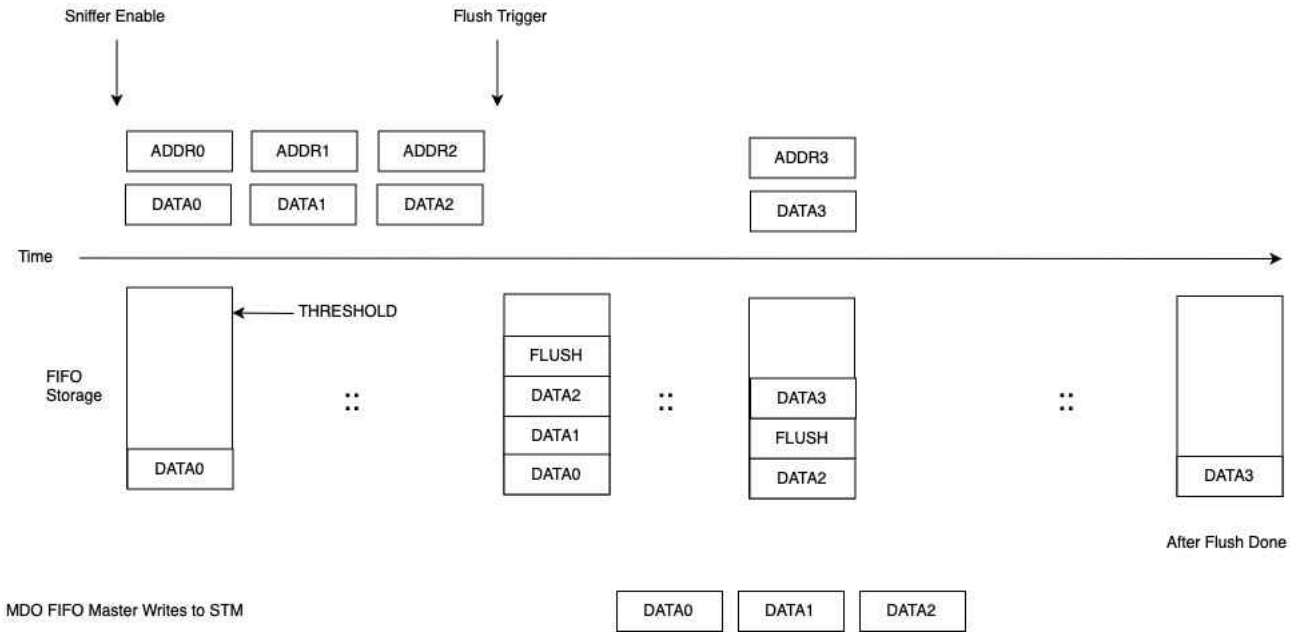

Figure 11-157. Sniffer Flush Operation

11.2.3.1.4 MDO Aggregator

11.2.3.1.4.1 Overview

The aggregator module merges the streams of data from the various MDO sources (SRCx) and sends it to the CS-STM Block.

Copyright © 2025 Texas Instruments Incorporated

- If there are multiple active SRC streams, it uses round robin arbitration to arbitrate which SRC should be sent.
- When an SRC wins arbitration, it has access for the entire duration of its burst transfer.
- The aggregator module also provides the correct address for the STM channel.

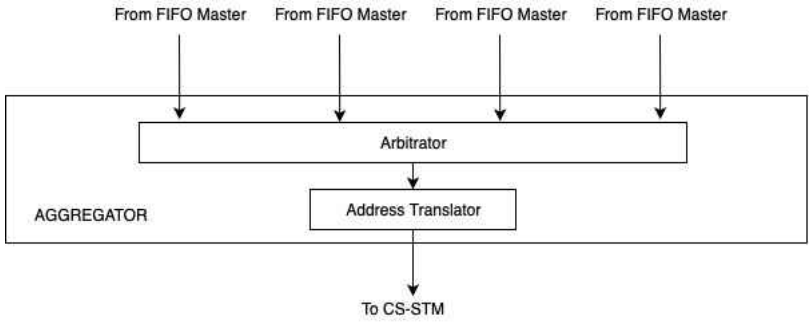

Figure 11-158. MDO Aggregator

11.2.3.1.4.2 Address Translator - CS_STM Mapping

The address provided to the CS-STM for each of the sources is derived as shown in Table 11-890 and Table 11-891.

Table 11-890. Address Mapping for Data Access

CS-STM Address	Mapping
[31:8]	SRCx_CHANNEL_ADDR[31:8]
[7]	!SRCx_CHANNEL_CFG_DATA_GUARANTEED
[6:5]	Tie Low
[4]	!SRCx_CHANNEL_CFG_DATA_MARKED
[3]	!SRCx_CHANNEL_CFG_DATA_TIMESTAMPED
[2:0]	Tie Low

Table 11-891. Address Mapping for Non Data Access

CS-STM Address	Mapping
[31:8]	SRCx_CHANNEL_ADDR[31:8]
[7]	!SRCx_CHANNEL_CFG_NONDATA_GUARANTEED
[6:5]	Tie High
[4]	Tie Low
[3]	!SRCx_CHANNEL_CFG_NONDATA_TIMESTAMPED
[2:0]	Tie Low

11.2.3.1.5 MDO Transmission Example

Table 11-892. MDO Transmission Example

SRC	Data	Size	Threshold
SRC2	DSP Processor Variables	2 KB	256 Bytes
SRC3	MSS SPI Data	2 KB	256 Bytes
SRC4	HWA 1D FFT Output 256 16 bit complex samples for 4 channels	4 KB	512 Bytes

Copyright © 2025 Texas Instruments Incorporated

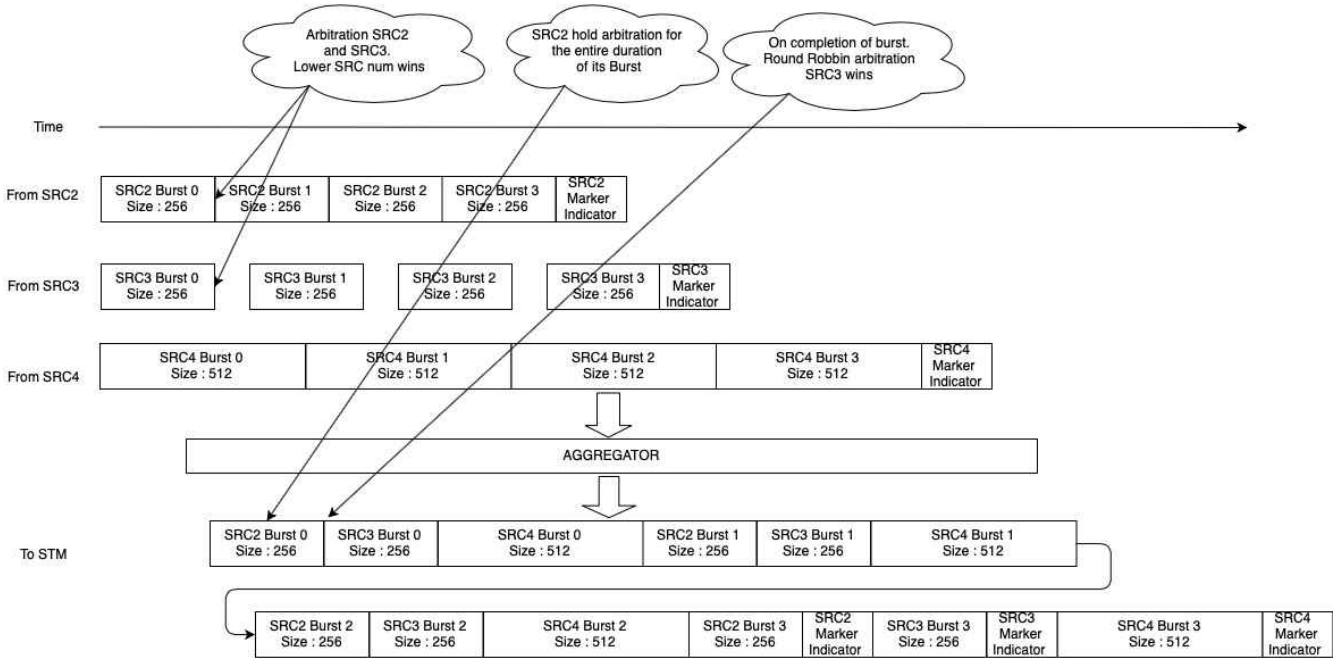

Figure 11-159. MDO Transmission

11.2.3.1.6 MDO Source Attributes

Table 11-893. MDO Source Attributes

SRC Num	SRC Name	Read/Write	Bus Matrix Stall Capability	HW Marker Event	Range Selection Parameter
0	RCSS_CSI2A_MDMA	Write	No	0 : RCSS_CSI2A_SOF_INT0 1 : RCSS_CSI2A_SOF_INT1 2 : RCSS_CSI2A_EOF_INT0 3 : RCSS_CSI2A_EOF_INT1	Address
1	RCSS_CSI2B_MDMA	Write	No	0 : RCSS_CSI2B_SOF_INT0 1 : RCSS_CSI2B_SOF_INT1 2 : RCSS_CSI2B_EOF_INT0 3 : RCSS_CSI2B_EOF_INT1	Address
2	DSS_MDO_FIFO	Write	Yes		Address
3	MSS_MDO_FIFO	Write	Yes		Address
4	DSS_HWA_DMA0 OR DSS_HWA_DMA1	Read OR Write	No	No	HWA Param Set Num
5	DSS_HWA_ENGINE	Read OR Write	No		HWA Param Set Num

Note

Because the DSS_MDO_FIFO (Address 0x83400000:0x83403FFC) and MSS_MDO_FIFO (Address 0xCA000000:0xCA00FFFC) have stall capability as they are hooked up to the bus matrix, these sources do not overflow.

11.2.3.1.7 References

Table 11-894 shows the ARM Coresight components that are part of the MDO Datapath.

Copyright © 2025 Texas Instruments Incorporated

Table 11-894. ARM Coresight Components

Component	TRM Refernce
Trace Port Interface Unit (TPIU)	ARM CoreSight™ Components TRM
System Trace Macrocell (STM)	ARM® CoreSight™ STM-500 System Trace Macrocell TRM

Copyright © 2025 Texas Instruments Incorporated

11.2.3.1.8 TOP_MDO_INFRA Registers

Table 11-895 lists the memory-mapped registers for the TOP_MDO_INFRA registers. All register offset addresses not listed in Table 11-895 should be considered as reserved locations and the register contents should not be modified.

Table 11-895. TOP_MDO_INFRA Registers

Offset	Acronym	Register Name	Section
0h	PID	PID register	Go
4h	HW_REG0		Go
8h	HW_REG1		Go
Ch	PREVIOUS_NAME		Go
10h	HW_REG3		Go
14h	SRC0_CTRL		Go
18h	SRC0_RANGE_START0		Go
1Ch	SRC0_RANGE_END0		Go
20h	SRC0_RANGE_START1		Go
24h	SRC0_RANGE_END1		Go
28h	SRC0_RANGE_START2		Go
2Ch	SRC0_RANGE_END2		Go
30h	SRC0_RANGE_START3		Go
34h	SRC0_RANGE_END3		Go
38h	SRC0_SW_TRIGGER		Go
3Ch	SRC0_THRESHOLD		Go
40h	SRC0_BW_CTRL		Go
44h	SRC0_CHANNEL		Go
48h	SRC0_CHANNEL_CFG		Go
4Ch	SRC1_CTRL		Go
50h	SRC1_RANGE_START0		Go
54h	SRC1_RANGE_END0		Go
58h	SRC1_RANGE_START1		Go
5Ch	SRC1_RANGE_END1		Go
60h	SRC1_RANGE_START2		Go
64h	SRC1_RANGE_END2		Go
68h	SRC1_RANGE_START3		Go
6Ch	SRC1_RANGE_END3		Go
70h	SRC1_SW_TRIGGER		Go
74h	SRC1_THRESHOLD		Go
78h	SRC1_BW_CTRL		Go
7Ch	SRC1_CHANNEL		Go
80h	SRC1_CHANNEL_CFG		Go
84h	SRC2_CTRL		Go
88h	SRC2_RANGE_START0		Go
8Ch	SRC2_RANGE_END0		Go
90h	SRC2_RANGE_START1		Go
94h	SRC2_RANGE_END1		Go
98h	SRC2_RANGE_START2		Go
9Ch	SRC2_RANGE_END2		Go
A0h	SRC2_RANGE_START3		Go

Copyright © 2025 Texas Instruments Incorporated

Table 11-895. TOP_MDO_INFRA Registers (continued)

Offset	Acronym	Register Name	Section
A4h	SRC2_RANGE_END3		Go
A8h	SRC2_SW_TRIGGER		Go
ACh	SRC2_THRESHOLD		Go
B0h	SRC2_BW_CTRL		Go
B4h	SRC2_CHANNEL		Go
B8h	SRC2_CHANNEL_CFG		Go
BCh	SRC3_CTRL		Go
C0h	SRC3_RANGE_START0		Go
C4h	SRC3_RANGE_END0		Go
C8h	SRC3_RANGE_START1		Go
CCh	SRC3_RANGE_END1		Go
D0h	SRC3_RANGE_START2		Go
D4h	SRC3_RANGE_END2		Go
D8h	SRC3_RANGE_START3		Go
DCh	SRC3_RANGE_END3		Go
E0h	SRC3_SW_TRIGGER		Go
E4h	SRC3_THRESHOLD		Go
E8h	SRC3_BW_CTRL		Go
ECh	SRC3_CHANNEL		Go
F0h	SRC3_CHANNEL_CFG		Go
F4h	SRC4_CTRL		Go
F8h	SRC4_RANGE_START0		Go
FCh	SRC4_RANGE_END0		Go
100h	SRC4_RANGE_START1		Go
104h	SRC4_RANGE_END1		Go
108h	SRC4_RANGE_START2		Go
10Ch	SRC4_RANGE_END2		Go
110h	SRC4_RANGE_START3		Go
114h	SRC4_RANGE_END3		Go
118h	SRC4_SW_TRIGGER		Go
11Ch	SRC4_THRESHOLD		Go
120h	SRC4_BW_CTRL		Go
124h	SRC4_CHANNEL		Go
128h	SRC4_CHANNEL_CFG		Go
12Ch	SRC5_CTRL		Go
130h	SRC5_RANGE_START0		Go
134h	SRC5_RANGE_END0		Go
138h	SRC5_RANGE_START1		Go
13Ch	SRC5_RANGE_END1		Go
140h	SRC5_RANGE_START2		Go
144h	SRC5_RANGE_END2		Go
148h	SRC5_RANGE_START3		Go
14Ch	SRC5_RANGE_END3		Go
150h	SRC5_SW_TRIGGER		Go
154h	SRC5_THRESHOLD		Go

Copyright © 2025 Texas Instruments Incorporated

Table 11-895. TOP_MDO_INFRA Registers (continued)

Offset	Acronym	Register Name	Section
158h	SRC5_BW_CTRL		Go
15Ch	SRC5_CHANNEL		Go
160h	SRC5_CHANNEL_CFG		Go
1D4h	SRC0_STATUS		Go
1D8h	SRC1_STATUS		Go
1DCh	SRC2_STATUS		Go
1E0h	SRC3_STATUS		Go
1E4h	SRC4_STATUS		Go
1E8h	SRC5_STATUS		Go
1ECh	INTERRUPT_MASK		Go
FD0h	HW_SPARE_RW0		Go
FD4h	HW_SPARE_RW1		Go
FD8h	HW_SPARE_RW2		Go
FDCh	HW_SPARE_RW3		Go
FE0h	HW_SPARE_RO0		Go
FE4h	HW_SPARE_RO1		Go
FE8h	HW_SPARE_RO2		Go
FECh	HW_SPARE_RO3		Go
FF0h	HW_SPARE_WPH		Go
FF4h	HW_SPARE_REC		Go
1008h	LOCK0_KICK0	- KICK0 component	Go
100Ch	LOCK0_KICK1	- KICK1 component	Go
1010h	intr_raw_status	Interrupt Raw Status/Set Register	Go
1014h	intr_enabled_status_clear	Interrupt Enabled Status/Clear register	Go
1018h	intr_enable	Interrupt Enable register	Go
101Ch	intr_enable_clear	Interrupt Enable Clear register	Go
1020h	eoi	EOI register	Go
1024h	fault_address	Fault Address register	Go
1028h	fault_type_status	Fault Type Status register	Go
102Ch	fault_attr_status	Fault Attribute Status register	Go
1030h	fault_clear	Fault Clear register	Go

Complex bit access types are encoded to fit into small table cells. Table 11-896 shows the codes that are used for access types in this section.

Table 11-896. TOP_MDO_INFRA Access Type Codes

Access Type	Code	Description
Read Type		
R	R	Read
Write Type		
W	W	Write
W1C	W 1C	Write 1 to clear
W1S	W 1S	Write 1 to set
Reset or Default Value		

Copyright © 2025 Texas Instruments Incorporated

Table 11-896. TOP_MDO_INFRA Access Type Codes (continued)

Access Type	Code	Description
-n		Value after reset or the default value

Copyright © 2025 Texas Instruments Incorporated

11.2.3.1.8.1 PID Register (Offset = 0h) [Reset = 61800213h]

PID is shown in Table 11-897.

Return to the Summary Table.

PID register

Table 11-897. PID Register Field Descriptions

Bit	Field	Type	Reset	Description
31-16	PID_msb16	R	6180h	
15-11	PID_misc	R	0h	
10-8	PID_major	R	2h	
7-6	PID_custom	R	0h	
5-0	PID_minor	R	13h	

Copyright © 2025 Texas Instruments Incorporated

11.2.3.1.8.2 HW_REG0 Register (Offset = 4h) [Reset = 00000000h]

HW_REG0 is shown in Table 11-898.

Return to the Summary Table.

Table 11-898. HW_REG0 Register Field Descriptions

Bit	Field	Type	Reset	Description
31-0	hwreg	R/W	0h	HW Reserved regiser

Copyright © 2025 Texas Instruments Incorporated

11.2.3.1.8.3 HW_REG1 Register (Offset = 8h) [Reset = 00000000h]

HW_REG1 is shown in Table 11-899.

Return to the Summary Table.

Table 11-899. HW_REG1 Register Field Descriptions

Bit	Field	Type	Reset	Description
31-0	hwreg	R/W	0h	HW Reserved regiser

Copyright © 2025 Texas Instruments Incorporated

11.2.3.1.8.4 PREVIOUS_NAME Register (Offset = Ch) [Reset = 00000000h]

PREVIOUS_NAME is shown in Table 11-900.

Return to the Summary Table.

Table 11-900. PREVIOUS_NAME Register Field Descriptions

Bit	Field	Type	Reset	Description
31-0	hwreg	R/W	0h	HW Reserved regiser

Copyright © 2025 Texas Instruments Incorporated

11.2.3.1.8.5 HW_REG3 Register (Offset = 10h) [Reset = 00000000h]

HW_REG3 is shown in Table 11-901.

Return to the Summary Table.

Table 11-901. HW_REG3 Register Field Descriptions

Bit	Field	Type	Reset	Description
31-0	hwreg	R/W	0h	HW Reserved regiser

Copyright © 2025 Texas Instruments Incorporated

11.2.3.1.8.6 SRC0_CTRL Register (Offset = 14h) [Reset = X]

SRC0_CTRL is shown in Table 11-902.

Return to the Summary Table.

Table 11-902. SRC0_CTRL Register Field Descriptions

Bit	Field	Type	Reset	Description
31-21	RESERVED	R/W	X	
20	gen_marker_on_flush	R/W	0h	Write 0x1 to generate a marker on Flush trigger
19-16	range_en	R/W	0h	Enable the corresponding range for data capture. Bit 0 : 0: Range 0 is disabled 1 : Range 0 is enableld
15-12	hw_flush_en	R/W	0h	Write 0x1 to enable HW Marker trigger to generate a Flush
11-8	hw_marker_en	R/W	0h	Write 0x1 to enable HW Marker trigger to generate a Marker
7-3	RESERVED	R/W	X	
2	crop_en	R/W	0h	Chop of the sign extension bits [15:12] for every 16 bits of data. 0 : Send all 16 bits 1 : Send lower 12 of 16 bits
1	snif_mode	R/W	0h	Select which bus to capture. 0 : Write Bus 1 : Read Bus
0	enable	R/W	0h	Indicates is the sniffer block is active or inactive. 0 : Captuere is Disabled 1 : Sniffer Enabled

Copyright © 2025 Texas Instruments Incorporated

11.2.3.1.8.7 SRC0_RANGE_START0 Register (Offset = 18h) [Reset = 00000000h]

SRC0_RANGE_START0 is shown in Table 11-903.

Return to the Summary Table.

Table 11-903. SRC0_RANGE_START0 Register Field Descriptions

Bit	Field	Type	Reset	Description
31-0	start	R/W	0h	Range 0 Start address OR Start param number for HWA , which needs to be captured

Copyright © 2025 Texas Instruments Incorporated

11.2.3.1.8.8 SRC0_RANGE_END0 Register (Offset = 1Ch) [Reset = 00000000h]

SRC0_RANGE_END0 is shown in Table 11-904.

Return to the Summary Table.

Table 11-904. SRC0_RANGE_END0 Register Field Descriptions

Bit	Field	Type	Reset	Description
31-0	end	R/W	0h	Range 0 End address OR End param number for HWA , which needs to be captured

Copyright © 2025 Texas Instruments Incorporated

11.2.3.1.8.9 SRC0_RANGE_START1 Register (Offset = 20h) [Reset = 00000000h]

SRC0_RANGE_START1 is shown in Table 11-905.

Return to the Summary Table.

Table 11-905. SRC0_RANGE_START1 Register Field Descriptions

Bit	Field	Type	Reset	Description
31-0	start	R/W	0h	Range 1 Start address OR Start param number for HWA , which needs to be captured

Copyright © 2025 Texas Instruments Incorporated

11.2.3.1.8.10 SRC0_RANGE_END1 Register (Offset = 24h) [Reset = 00000000h]

SRC0_RANGE_END1 is shown in Table 11-906.

Return to the Summary Table.

Table 11-906. SRC0_RANGE_END1 Register Field Descriptions

Bit	Field	Type	Reset	Description
31-0	end	R/W	0h	Range 1 End address OR End param number for HWA , which needs to be captured

Copyright © 2025 Texas Instruments Incorporated

11.2.3.1.8.11 SRC0_RANGE_START2 Register (Offset = 28h) [Reset = 00000000h]

SRC0_RANGE_START2 is shown in Table 11-907.

Return to the Summary Table.

Table 11-907. SRC0_RANGE_START2 Register Field Descriptions

Bit	Field	Type	Reset	Description
31-0	start	R/W	0h	Range 2 Start address OR Start param number for HWA , which needs to be captured

Copyright © 2025 Texas Instruments Incorporated

11.2.3.1.8.12 SRC0_RANGE_END2 Register (Offset = 2Ch) [Reset = 00000000h]

SRC0_RANGE_END2 is shown in Table 11-908.

Return to the Summary Table.

Table 11-908. SRC0_RANGE_END2 Register Field Descriptions

Bit	Field	Type	Reset	Description
31-0	end	R/W	0h	Range 2 End address OR End param number for HWA , which needs to be captured

Copyright © 2025 Texas Instruments Incorporated

11.2.3.1.8.13 SRC0_RANGE_START3 Register (Offset = 30h) [Reset = 00000000h]

SRC0_RANGE_START3 is shown in Table 11-909.

Return to the Summary Table.

Table 11-909. SRC0_RANGE_START3 Register Field Descriptions

Bit	Field	Type	Reset	Description
31-0	start	R/W	0h	Range 3 Start address OR Start param number for HWA , which needs to be captured

Copyright © 2025 Texas Instruments Incorporated

11.2.3.1.8.14 SRC0_RANGE_END3 Register (Offset = 34h) [Reset = 00000000h]

SRC0_RANGE_END3 is shown in Table 11-910.

Return to the Summary Table.

Table 11-910. SRC0_RANGE_END3 Register Field Descriptions

Bit	Field	Type	Reset	Description
31-0	end	R/W	0h	Range 3 End address OR End param number for HWA , which needs to be captured

Copyright © 2025 Texas Instruments Incorporated

11.2.3.1.8.15 SRC0_SW_TRIGGER Register (Offset = 38h) [Reset = X]

SRC0_SW_TRIGGER is shown in Table 11-911.

Return to the Summary Table.

Table 11-911. SRC0_SW_TRIGGER Register Field Descriptions

Bit	Field	Type	Reset	Description
31-5	RESERVED	R/W	X	
4	flush	R/W	0h	Write 0x1 to trigger a Flush. A marker packet will also be inserted
3-1	RESERVED	R/W	X	
0	marker	R/W	0h	Write 0x1 to insert a Marker

Copyright © 2025 Texas Instruments Incorporated

11.2.3.1.8.16 SRC0_THRESHOLD Register (Offset = 3Ch) [Reset = X]

SRC0_THRESHOLD is shown in Table 11-912.

Return to the Summary Table.

Table 11-912. SRC0_THRESHOLD Register Field Descriptions

Bit	Field	Type	Reset	Description
31-10	RESERVED	R/W	X	
9-0	threshold	R/W	0h	The FIFO threshold to trigger writes from the Source FIFO. This value is in multiples of 32 bytes. If SRCx_BW_CTRL_WRITE_MODE is 0x0, then the bits [9:5] of this field need to be programmed to 0x0

Copyright © 2025 Texas Instruments Incorporated

11.2.3.1.8.17 SRC0_BW_CTRL Register (Offset = 40h) [Reset = X]

SRC0_BW_CTRL is shown in Table 11-913.

Return to the Summary Table.

Table 11-913. SRC0_BW_CTRL Register Field Descriptions

Bit	Field	Type	Reset	Description
31	RESERVED	R/W	X	
30-28	priority	R/W	0h	0 : Highest Dynamic Priority 7 : Lowest Dynamic Priority
27-21	RESERVED	R/W	X	
20-16	burst_size	R/W	0h	The burst_size is the minimum size for which the SRC will keep arbitration once it wins . The value in multiples of 32 bytes
15-12	RESERVED	R/W	X	
11-4	burst_num	R/W	0h	The FIFO threshold to trigger writes from the Source FIFO. Value to be aligned to 32 bytes [4:0] should be 0x0
3-1	RESERVED	R/W	X	
0	write_mode	R/W	0h	0 : Send data equivalent to threshold size. This can be set only if threshold is less than 1024 bytes 1 : Send data equivalent to burst_count * burst_size

Copyright © 2025 Texas Instruments Incorporated

11.2.3.1.8.18 SRC0_CHANNEL Register (Offset = 44h) [Reset = 00000000h]

SRC0_CHANNEL is shown in Table 11-914.

Return to the Summary Table.

Table 11-914. SRC0_CHANNEL Register Field Descriptions

Bit	Field	Type	Reset	Description
31-0	addr	R/W	0h	Configure the STM channel number on bits [31:8] . If channel number is 3 , configure bits [31:8] =3

Copyright © 2025 Texas Instruments Incorporated

11.2.3.1.8.19 SRC0_CHANNEL_CFG Register (Offset = 48h) [Reset = X]

SRC0_CHANNEL_CFG is shown in Table 11-915.

Return to the Summary Table.

Table 11-915. SRC0_CHANNEL_CFG Register Field Descriptions

Bit	Field	Type	Reset	Description
31-5	RESERVED	R/W	X	
4	NONDATA_TIMESTAMPED	R/W	0h	Selects whether the Non Data access for the Source is timestamped 0 : No Timestamp 1 : Timestamped
3	NONDATA_GUARANTEED	R/W	0h	Selects whether the Non Data access for the Source is Guaranteed or Invariant Timing 0 : Time Invariant 1 : Guaranteed
2	DATA_TIMESTAMPED	R/W	0h	Selects whether the Data access for the Source is timestamped 0 : No Timestamp 1 : Timestamped
1	DATA_MARKED	R/W	0h	Selects whether the Data access for the Source is marked 0 : Un-Marked 1 : Marked
0	DATA_GUARANTEED	R/W	0h	Selects whether the Data access for the Source is Guaranteed or Invariant Timing 0 : Time Invariant 1 : Guaranteed

Copyright © 2025 Texas Instruments Incorporated

11.2.3.1.8.20 SRC1_CTRL Register (Offset = 4Ch) [Reset = X]

SRC1_CTRL is shown in Table 11-916.

Return to the Summary Table.

Table 11-916. SRC1_CTRL Register Field Descriptions

Bit	Field	Type	Reset	Description
31-21	RESERVED	R/W	X	
20	gen_marker_on_flush	R/W	0h	Write 0x1 to generate a marker on Flush trigger
19-16	range_en	R/W	0h	Enable the corresponding range for data capture. Bit 0 : 0: Range 0 is disabled 1 : Range 0 is enableld
15-12	hw_flush_en	R/W	0h	Write 0x1 to enable HW Marker trigger to generate a Flush
11-8	hw_marker_en	R/W	0h	Write 0x1 to enable HW Marker trigger to generate a Marker
7-3	RESERVED	R/W	X	
2	crop_en	R/W	0h	Chop of the sign extension bits [15:12] for every 16 bits of data. 0 : Send all 16 bits 1 : Send lower 12 of 16 bits
1	snif_mode	R/W	0h	Select which bus to capture. 0 : Write Bus 1 : Read Bus
0	enable	R/W	0h	Indicates is the sniffer block is active or inactive. 0 : Captuere is Disabled 1 : Sniffer Enabled

Copyright © 2025 Texas Instruments Incorporated

11.2.3.1.8.21 SRC1_RANGE_START0 Register (Offset = 50h) [Reset = 00000000h]

SRC1_RANGE_START0 is shown in Table 11-917.

Return to the Summary Table.

Table 11-917. SRC1_RANGE_START0 Register Field Descriptions

Bit	Field	Type	Reset	Description
31-0	start	R/W	0h	Range 0 Start address OR Start param number for HWA , which needs to be captured

Copyright © 2025 Texas Instruments Incorporated

11.2.3.1.8.22 SRC1_RANGE_END0 Register (Offset = 54h) [Reset = 00000000h]

SRC1_RANGE_END0 is shown in Table 11-918.

Return to the Summary Table.

Table 11-918. SRC1_RANGE_END0 Register Field Descriptions

Bit	Field	Type	Reset	Description
31-0	end	R/W	0h	Range 0 End address OR End param number for HWA , which needs to be captured

Copyright © 2025 Texas Instruments Incorporated

11.2.3.1.8.23 SRC1_RANGE_START1 Register (Offset = 58h) [Reset = 00000000h]

SRC1_RANGE_START1 is shown in Table 11-919.

Return to the Summary Table.

Table 11-919. SRC1_RANGE_START1 Register Field Descriptions

Bit	Field	Type	Reset	Description
31-0	start	R/W	0h	Range 1 Start address OR Start param number for HWA , which needs to be captured

Copyright © 2025 Texas Instruments Incorporated

11.2.3.1.8.24 SRC1_RANGE_END1 Register (Offset = 5Ch) [Reset = 00000000h]

SRC1_RANGE_END1 is shown in Table 11-920.

Return to the Summary Table.

Table 11-920. SRC1_RANGE_END1 Register Field Descriptions

Bit	Field	Type	Reset	Description
31-0	end	R/W	0h	Range 1 End address OR End param number for HWA , which needs to be captured

Copyright © 2025 Texas Instruments Incorporated

11.2.3.1.8.25 SRC1_RANGE_START2 Register (Offset = 60h) [Reset = 00000000h]

SRC1_RANGE_START2 is shown in Table 11-921.

Return to the Summary Table.

Table 11-921. SRC1_RANGE_START2 Register Field Descriptions

Bit	Field	Type	Reset	Description
31-0	start	R/W	0h	Range 2 Start address OR Start param number for HWA , which needs to be captured

Copyright © 2025 Texas Instruments Incorporated

11.2.3.1.8.26 SRC1_RANGE_END2 Register (Offset = 64h) [Reset = 00000000h]

SRC1_RANGE_END2 is shown in Table 11-922.

Return to the Summary Table.

Table 11-922. SRC1_RANGE_END2 Register Field Descriptions

Bit	Field	Type	Reset	Description
31-0	end	R/W	0h	Range 2 End address OR End param number for HWA , which needs to be captured

Copyright © 2025 Texas Instruments Incorporated

11.2.3.1.8.27 SRC1_RANGE_START3 Register (Offset = 68h) [Reset = 00000000h]

SRC1_RANGE_START3 is shown in Table 11-923.

Return to the Summary Table.

Table 11-923. SRC1_RANGE_START3 Register Field Descriptions

Bit	Field	Type	Reset	Description
31-0	start	R/W	0h	Range 3 Start address OR Start param number for HWA , which needs to be captured

Copyright © 2025 Texas Instruments Incorporated

11.2.3.1.8.28 SRC1_RANGE_END3 Register (Offset = 6Ch) [Reset = 00000000h]

SRC1_RANGE_END3 is shown in Table 11-924.

Return to the Summary Table.

Table 11-924. SRC1_RANGE_END3 Register Field Descriptions

Bit	Field	Type	Reset	Description
31-0	end	R/W	0h	Range 3 End address OR End param number for HWA , which needs to be captured

Copyright © 2025 Texas Instruments Incorporated

11.2.3.1.8.29 SRC1_SW_TRIGGER Register (Offset = 70h) [Reset = X]

SRC1_SW_TRIGGER is shown in Table 11-925.

Return to the Summary Table.

Table 11-925. SRC1_SW_TRIGGER Register Field Descriptions

Bit	Field	Type	Reset	Description
31-5	RESERVED	R/W	X	
4	flush	R/W	0h	Write 0x1 to trigger a Flush. A marker packet will also be inserted
3-1	RESERVED	R/W	X	
0	marker	R/W	0h	Write 0x1 to insert a Marker

Copyright © 2025 Texas Instruments Incorporated

11.2.3.1.8.30 SRC1_THRESHOLD Register (Offset = 74h) [Reset = X]

SRC1_THRESHOLD is shown in Table 11-926.

Return to the Summary Table.

Table 11-926. SRC1_THRESHOLD Register Field Descriptions

Bit	Field	Type	Reset	Description
31-10	RESERVED	R/W	X	
9-0	threshold	R/W	0h	The FIFO threshold to trigger writes from the Source FIFO. This value is in multiples of 32 bytes. If SRCx_BW_CTRL_WRITE_MODE is 0x0, then the bits [9:5] of this field need to be programmed to 0x0

Copyright © 2025 Texas Instruments Incorporated

11.2.3.1.8.31 SRC1_BW_CTRL Register (Offset = 78h) [Reset = X]

SRC1_BW_CTRL is shown in Table 11-927.

Return to the Summary Table.

Table 11-927. SRC1_BW_CTRL Register Field Descriptions

Bit	Field	Type	Reset	Description
31	RESERVED	R/W	X	
30-28	priority	R/W	0h	0 : Highest Dynamic Priority 7 : Lowest Dynamic Priority
27-21	RESERVED	R/W	X	
20-16	burst_size	R/W	0h	The burst_size is the minimum size for which the SRC will keep arbitration once it wins . The value in multiples of 32 bytes
15-12	RESERVED	R/W	X	
11-4	burst_num	R/W	0h	The FIFO threshold to trigger writes from the Source FIFO. Value to be aligned to 32 bytes [4:0] should be 0x0
3-1	RESERVED	R/W	X	
0	write_mode	R/W	0h	0 : Send data equivalent to threshold size. This can be set only if threshold is less than 1024 bytes 1 : Send data equivalent to burst_count * burst_size

Copyright © 2025 Texas Instruments Incorporated

11.2.3.1.8.32 SRC1_CHANNEL Register (Offset = 7Ch) [Reset = 00000000h]

SRC1_CHANNEL is shown in Table 11-928.

Return to the Summary Table.

Table 11-928. SRC1_CHANNEL Register Field Descriptions

Bit	Field	Type	Reset	Description
31-0	addr	R/W	0h	Configure the STM channel number on bits [31:8] . If channel number is 3 , configure bits [31:8] =3

Copyright © 2025 Texas Instruments Incorporated

11.2.3.1.8.33 SRC1_CHANNEL_CFG Register (Offset = 80h) [Reset = X]

SRC1_CHANNEL_CFG is shown in Table 11-929.

Return to the Summary Table.

Table 11-929. SRC1_CHANNEL_CFG Register Field Descriptions

Bit	Field	Type	Reset	Description
31-5	RESERVED	R/W	X	
4	NONDATA_TIMESTAMPED	R/W	0h	Selects whether the Non Data access for the Source is timestamped 0 : No Timestamp 1 : Timestamped
3	NONDATA_GUARANTEED	R/W	0h	Selects whether the Non Data access for the Source is Guaranteed or Invariant Timing 0 : Time Invariant 1 : Guaranteed
2	DATA_TIMESTAMPED	R/W	0h	Selects whether the Data access for the Source is timestamped 0 : No Timestamp 1 : Timestamped
1	DATA_MARKED	R/W	0h	Selects whether the Data access for the Source is marked 0 : Un-Marked 1 : Marked
0	DATA_GUARANTEED	R/W	0h	Selects whether the Data access for the Source is Guaranteed or Invariant Timing 0 : Time Invariant 1 : Guaranteed

Copyright © 2025 Texas Instruments Incorporated

11.2.3.1.8.34 SRC2_CTRL Register (Offset = 84h) [Reset = X]

SRC2_CTRL is shown in Table 11-930.

Return to the Summary Table.

Table 11-930. SRC2_CTRL Register Field Descriptions

Bit	Field	Type	Reset	Description
31-21	RESERVED	R/W	X	
20	gen_marker_on_flush	R/W	0h	Write 0x1 to generate a marker on Flush trigger
19-16	range_en	R/W	0h	Enable the corresponding range for data capture. Bit 0 : 0: Range 0 is disabled 1 : Range 0 is enableld
15-12	hw_flush_en	R/W	0h	Write 0x1 to enable HW Marker trigger to generate a Flush
11-8	hw_marker_en	R/W	0h	Write 0x1 to enable HW Marker trigger to generate a Marker
7-3	RESERVED	R/W	X	
2	crop_en	R/W	0h	Chop of the sign extension bits [15:12] for every 16 bits of data. 0 : Send all 16 bits 1 : Send lower 12 of 16 bits
1	snif_mode	R/W	0h	Select which bus to capture. 0 : Write Bus 1 : Read Bus
0	enable	R/W	0h	Indicates is the sniffer block is active or inactive. 0 : Captuere is Disabled 1 : Sniffer Enabled

Copyright © 2025 Texas Instruments Incorporated

11.2.3.1.8.35 SRC2_RANGE_START0 Register (Offset = 88h) [Reset = 00000000h]

SRC2_RANGE_START0 is shown in Table 11-931.

Return to the Summary Table.

Table 11-931. SRC2_RANGE_START0 Register Field Descriptions

Bit	Field	Type	Reset	Description
31-0	start	R/W	0h	Range 0 Start address OR Start param number for HWA , which needs to be captured

Copyright © 2025 Texas Instruments Incorporated

11.2.3.1.8.36 SRC2_RANGE_END0 Register (Offset = 8Ch) [Reset = 00000000h]

SRC2_RANGE_END0 is shown in Table 11-932.

Return to the Summary Table.

Table 11-932. SRC2_RANGE_END0 Register Field Descriptions

Bit	Field	Type	Reset	Description
31-0	end	R/W	0h	Range 0 End address OR End param number for HWA , which needs to be captured

Copyright © 2025 Texas Instruments Incorporated

11.2.3.1.8.37 SRC2_RANGE_START1 Register (Offset = 90h) [Reset = 00000000h]

SRC2_RANGE_START1 is shown in Table 11-933.

Return to the Summary Table.

Table 11-933. SRC2_RANGE_START1 Register Field Descriptions

Bit	Field	Type	Reset	Description
31-0	start	R/W	0h	Range 1 Start address OR Start param number for HWA , which needs to be captured

Copyright © 2025 Texas Instruments Incorporated

11.2.3.1.8.38 SRC2_RANGE_END1 Register (Offset = 94h) [Reset = 00000000h]

SRC2_RANGE_END1 is shown in Table 11-934.

Return to the Summary Table.

Table 11-934. SRC2_RANGE_END1 Register Field Descriptions

Bit	Field	Type	Reset	Description
31-0	end	R/W	0h	Range 1 End address OR End param number for HWA , which needs to be captured

Copyright © 2025 Texas Instruments Incorporated

11.2.3.1.8.39 SRC2_RANGE_START2 Register (Offset = 98h) [Reset = 00000000h]

SRC2_RANGE_START2 is shown in Table 11-935.

Return to the Summary Table.

Table 11-935. SRC2_RANGE_START2 Register Field Descriptions

Bit	Field	Type	Reset	Description
31-0	start	R/W	0h	Range 2 Start address OR Start param number for HWA , which needs to be captured

Copyright © 2025 Texas Instruments Incorporated

11.2.3.1.8.40 SRC2_RANGE_END2 Register (Offset = 9Ch) [Reset = 00000000h]

SRC2_RANGE_END2 is shown in Table 11-936.

Return to the Summary Table.

Table 11-936. SRC2_RANGE_END2 Register Field Descriptions

Bit	Field	Type	Reset	Description
31-0	end	R/W	0h	Range 2 End address OR End param number for HWA , which needs to be captured

Copyright © 2025 Texas Instruments Incorporated

11.2.3.1.8.41 SRC2_RANGE_START3 Register (Offset = A0h) [Reset = 00000000h]

SRC2_RANGE_START3 is shown in Table 11-937.

Return to the Summary Table.

Table 11-937. SRC2_RANGE_START3 Register Field Descriptions

Bit	Field	Type	Reset	Description
31-0	start	R/W	0h	Range 3 Start address OR Start param number for HWA , which needs to be captured

Copyright © 2025 Texas Instruments Incorporated

11.2.3.1.8.42 SRC2_RANGE_END3 Register (Offset = A4h) [Reset = 00000000h]

SRC2_RANGE_END3 is shown in Table 11-938.

Return to the Summary Table.

Table 11-938. SRC2_RANGE_END3 Register Field Descriptions

Bit	Field	Type	Reset	Description
31-0	end	R/W	0h	Range 3 End address OR End param number for HWA , which needs to be captured

Copyright © 2025 Texas Instruments Incorporated

11.2.3.1.8.43 SRC2_SW_TRIGGER Register (Offset = A8h) [Reset = X]

SRC2_SW_TRIGGER is shown in Table 11-939.

Return to the Summary Table.

Table 11-939. SRC2_SW_TRIGGER Register Field Descriptions

Bit	Field	Type	Reset	Description
31-5	RESERVED	R/W	X	
4	flush	R/W	0h	Write 0x1 to trigger a Flush.
3-1	RESERVED	R/W	X	
0	marker	R/W	0h	Write 0x1 to insert a Marker

Copyright © 2025 Texas Instruments Incorporated

11.2.3.1.8.44 SRC2_THRESHOLD Register (Offset = ACh) [Reset = X]

SRC2_THRESHOLD is shown in Table 11-940.

Return to the Summary Table.

Table 11-940. SRC2_THRESHOLD Register Field Descriptions

Bit	Field	Type	Reset	Description
31-10	RESERVED	R/W	X	
9-0	threshold	R/W	0h	The FIFO threshold to trigger writes from the Source FIFO. This value is in multiples of 32 bytes. If SRCx_BW_CTRL_WRITE_MODE is 0x0, then the bits [9:5] of this field need to be programmed to 0x0

Copyright © 2025 Texas Instruments Incorporated

11.2.3.1.8.45 SRC2_BW_CTRL Register (Offset = B0h) [Reset = X]

SRC2_BW_CTRL is shown in Table 11-941.

Return to the Summary Table.

Table 11-941. SRC2_BW_CTRL Register Field Descriptions

Bit	Field	Type	Reset	Description
31	RESERVED	R/W	X	
30-28	priority	R/W	0h	0 : Highest Dynamic Priority 7 : Lowest Dynamic Priority
27-21	RESERVED	R/W	X	
20-16	burst_size	R/W	0h	The burst_size is the minimum size for which the SRC will keep arbitration once it wins . The value in multiples of 32 bytes
15-12	RESERVED	R/W	X	
11-4	burst_num	R/W	0h	The FIFO threshold to trigger writes from the Source FIFO. Value to be aligned to 32 bytes [4:0] should be 0x0
3-1	RESERVED	R/W	X	
0	write_mode	R/W	0h	0 : Send data equivalent to threshold size. This can be set only if threshold is less than 1024 bytes 1 : Send data equivalent to burst_count * burst_size

Copyright © 2025 Texas Instruments Incorporated

11.2.3.1.8.46 SRC2_CHANNEL Register (Offset = B4h) [Reset = 00000000h]

SRC2_CHANNEL is shown in Table 11-942.

Return to the Summary Table.

Table 11-942. SRC2_CHANNEL Register Field Descriptions

Bit	Field	Type	Reset	Description
31-0	addr	R/W	0h	Configure the STM channel number on bits [31:8] . If channel number is 3 , configure bits [31:8] =3

Copyright © 2025 Texas Instruments Incorporated

11.2.3.1.8.47 SRC2_CHANNEL_CFG Register (Offset = B8h) [Reset = X]

SRC2_CHANNEL_CFG is shown in Table 11-943.

Return to the Summary Table.

Table 11-943. SRC2_CHANNEL_CFG Register Field Descriptions

Bit	Field	Type	Reset	Description
31-5	RESERVED	R/W	X	
4	NONDATA_TIMESTAMPED	R/W	0h	Selects whether the Non Data access for the Source is timestamped 0 : No Timestamp 1 : Timestamped
3	NONDATA_GUARANTEED	R/W	0h	Selects whether the Non Data access for the Source is Guaranteed or Invariant Timing 0 : Time Invariant 1 : Guaranteed
2	DATA_TIMESTAMPED	R/W	0h	Selects whether the Data access for the Source is timestamped 0 : No Timestamp 1 : Timestamped
1	DATA_MARKED	R/W	0h	Selects whether the Data access for the Source is marked 0 : Un-Marked 1 : Marked
0	DATA_GUARANTEED	R/W	0h	Selects whether the Data access for the Source is Guaranteed or Invariant Timing 0 : Time Invariant 1 : Guaranteed

Copyright © 2025 Texas Instruments Incorporated

11.2.3.1.8.48 SRC3_CTRL Register (Offset = BCh) [Reset = X]

SRC3_CTRL is shown in Table 11-944.

Return to the Summary Table.

Table 11-944. SRC3_CTRL Register Field Descriptions

Bit	Field	Type	Reset	Description
31-21	RESERVED	R/W	X	
20	gen_marker_on_flush	R/W	0h	Write 0x1 to generate a marker on Flush trigger
19-16	range_en	R/W	0h	Enable the corresponding range for data capture. Bit 0 : 0: Range 0 is disabled 1 : Range 0 is enableld
15-12	hw_flush_en	R/W	0h	Write 0x1 to enable HW Marker trigger to generate a Flush
11-8	hw_marker_en	R/W	0h	Write 0x1 to enable HW Marker trigger to generate a Marker
7-3	RESERVED	R/W	X	
2	crop_en	R/W	0h	Chop of the sign extension bits [15:12] for every 16 bits of data. 0 : Send all 16 bits 1 : Send lower 12 of 16 bits
1	snif_mode	R/W	0h	Select which bus to capture. 0 : Write Bus 1 : Read Bus
0	enable	R/W	0h	Indicates is the sniffer block is active or inactive. 0 : Captuere is Disabled 1 : Sniffer Enabled

Copyright © 2025 Texas Instruments Incorporated

11.2.3.1.8.49 SRC3_RANGE_START0 Register (Offset = C0h) [Reset = 00000000h]

SRC3_RANGE_START0 is shown in Table 11-945.

Return to the Summary Table.

Table 11-945. SRC3_RANGE_START0 Register Field Descriptions

Bit	Field	Type	Reset	Description
31-0	start	R/W	0h	Range 0 Start address OR Start param number for HWA , which needs to be captured

Copyright © 2025 Texas Instruments Incorporated

11.2.3.1.8.50 SRC3_RANGE_END0 Register (Offset = C4h) [Reset = 00000000h]

SRC3_RANGE_END0 is shown in Table 11-946.

Return to the Summary Table.

Table 11-946. SRC3_RANGE_END0 Register Field Descriptions

Bit	Field	Type	Reset	Description
31-0	end	R/W	0h	Range 0 End address OR End param number for HWA , which needs to be captured

Copyright © 2025 Texas Instruments Incorporated

11.2.3.1.8.51 SRC3_RANGE_START1 Register (Offset = C8h) [Reset = 00000000h]

SRC3_RANGE_START1 is shown in Table 11-947.

Return to the Summary Table.

Table 11-947. SRC3_RANGE_START1 Register Field Descriptions

Bit	Field	Type	Reset	Description
31-0	start	R/W	0h	Range 1 Start address OR Start param number for HWA , which needs to be captured

Copyright © 2025 Texas Instruments Incorporated

11.2.3.1.8.52 SRC3_RANGE_END1 Register (Offset = CCh) [Reset = 00000000h]

SRC3_RANGE_END1 is shown in Table 11-948.

Return to the Summary Table.

Table 11-948. SRC3_RANGE_END1 Register Field Descriptions

Bit	Field	Type	Reset	Description
31-0	end	R/W	0h	Range 1 End address OR End param number for HWA , which needs to be captured

Copyright © 2025 Texas Instruments Incorporated

11.2.3.1.8.53 SRC3_RANGE_START2 Register (Offset = D0h) [Reset = 00000000h]

SRC3_RANGE_START2 is shown in Table 11-949.

Return to the Summary Table.

Table 11-949. SRC3_RANGE_START2 Register Field Descriptions

Bit	Field	Type	Reset	Description
31-0	start	R/W	0h	Range 2 Start address OR Start param number for HWA , which needs to be captured

Copyright © 2025 Texas Instruments Incorporated

11.2.3.1.8.54 SRC3_RANGE_END2 Register (Offset = D4h) [Reset = 00000000h]

SRC3_RANGE_END2 is shown in Table 11-950.

Return to the Summary Table.

Table 11-950. SRC3_RANGE_END2 Register Field Descriptions

Bit	Field	Type	Reset	Description
31-0	end	R/W	0h	Range 2 End address OR End param number for HWA , which needs to be captured

Copyright © 2025 Texas Instruments Incorporated

11.2.3.1.8.55 SRC3_RANGE_START3 Register (Offset = D8h) [Reset = 00000000h]

SRC3_RANGE_START3 is shown in Table 11-951.

Return to the Summary Table.

Table 11-951. SRC3_RANGE_START3 Register Field Descriptions

Bit	Field	Type	Reset	Description
31-0	start	R/W	0h	Range 3 Start address OR Start param number for HWA , which needs to be captured

Copyright © 2025 Texas Instruments Incorporated

11.2.3.1.8.56 SRC3_RANGE_END3 Register (Offset = DCh) [Reset = 00000000h]

SRC3_RANGE_END3 is shown in Table 11-952.

Return to the Summary Table.

Table 11-952. SRC3_RANGE_END3 Register Field Descriptions

Bit	Field	Type	Reset	Description
31-0	end	R/W	0h	Range 3 End address OR End param number for HWA , which needs to be captured

Copyright © 2025 Texas Instruments Incorporated

11.2.3.1.8.57 SRC3_SW_TRIGGER Register (Offset = E0h) [Reset = X]

SRC3_SW_TRIGGER is shown in Table 11-953.

Return to the Summary Table.

Table 11-953. SRC3_SW_TRIGGER Register Field Descriptions

Bit	Field	Type	Reset	Description
31-5	RESERVED	R/W	X	
4	flush	R/W	0h	Write 0x1 to trigger a Flush. A marker packet will also be inserted
3-1	RESERVED	R/W	X	
0	marker	R/W	0h	Write 0x1 to insert a Marker

Copyright © 2025 Texas Instruments Incorporated

11.2.3.1.8.58 SRC3_THRESHOLD Register (Offset = E4h) [Reset = X]

SRC3_THRESHOLD is shown in Table 11-954.

Return to the Summary Table.

Table 11-954. SRC3_THRESHOLD Register Field Descriptions

Bit	Field	Type	Reset	Description
31-10	RESERVED	R/W	X	
9-0	threshold	R/W	0h	The FIFO threshold to trigger writes from the Source FIFO. This value is in multiples of 32 bytes. If SRCx_BW_CTRL_WRITE_MODE is 0x0, then the bits [9:5] of this field need to be programmed to 0x0

Copyright © 2025 Texas Instruments Incorporated

11.2.3.1.8.59 SRC3_BW_CTRL Register (Offset = E8h) [Reset = X]

SRC3_BW_CTRL is shown in Table 11-955.

Return to the Summary Table.

Table 11-955. SRC3_BW_CTRL Register Field Descriptions

Bit	Field	Type	Reset	Description
31	RESERVED	R/W	X	
30-28	priority	R/W	0h	0 : Highest Dynamic Priority 7 : Lowest Dynamic Priority
27-21	RESERVED	R/W	X	
20-16	burst_size	R/W	0h	The burst_size is the minimum size for which the SRC will keep arbitration once it wins . The value in multiples of 32 bytes
15-12	RESERVED	R/W	X	
11-4	burst_num	R/W	0h	The FIFO threshold to trigger writes from the Source FIFO. Value to be aligned to 32 bytes [4:0] should be 0x0
3-1	RESERVED	R/W	X	
0	write_mode	R/W	0h	0 : Send data equivalent to threshold size. This can be set only if threshold is less than 1024 bytes 1 : Send data equivalent to burst_count * burst_size

Copyright © 2025 Texas Instruments Incorporated

11.2.3.1.8.60 SRC3_CHANNEL Register (Offset = ECh) [Reset = 00000000h]

SRC3_CHANNEL is shown in Table 11-956.

Return to the Summary Table.

Table 11-956. SRC3_CHANNEL Register Field Descriptions

Bit	Field	Type	Reset	Description
31-0	addr	R/W	0h	Configure the STM channel number on bits [31:8] . If channel number is 3 , configure bits [31:8] =3

Copyright © 2025 Texas Instruments Incorporated

11.2.3.1.8.61 SRC3_CHANNEL_CFG Register (Offset = F0h) [Reset = X]

SRC3_CHANNEL_CFG is shown in Table 11-957.

Return to the Summary Table.

Table 11-957. SRC3_CHANNEL_CFG Register Field Descriptions

Bit	Field	Type	Reset	Description
31-5	RESERVED	R/W	X	
4	NONDATA_TIMESTAMPED	R/W	0h	Selects whether the Non Data access for the Source is timestamped 0 : No Timestamp 1 : Timestamped
3	NONDATA_GUARANTEED	R/W	0h	Selects whether the Non Data access for the Source is Guaranteed or Invariant Timing 0 : Time Invariant 1 : Guaranteed
2	DATA_TIMESTAMPED	R/W	0h	Selects whether the Data access for the Source is timestamped 0 : No Timestamp 1 : Timestamped
1	DATA_MARKED	R/W	0h	Selects whether the Data access for the Source is marked 0 : Un-Marked 1 : Marked
0	DATA_GUARANTEED	R/W	0h	Selects whether the Data access for the Source is Guaranteed or Invariant Timing 0 : Time Invariant 1 : Guaranteed

Copyright © 2025 Texas Instruments Incorporated

11.2.3.1.8.62 SRC4_CTRL Register (Offset = F4h) [Reset = X]

SRC4_CTRL is shown in Table 11-958.

Return to the Summary Table.

Table 11-958. SRC4_CTRL Register Field Descriptions

Bit	Field	Type	Reset	Description
31-21	RESERVED	R/W	X	
20	gen_marker_on_flush	R/W	0h	Write 0x1 to generate a marker on Flush trigger
19-16	range_en	R/W	0h	Enable the corresponding range for data capture. Bit 0 : 0: Range 0 is disabled 1 : Range 0 is enableld
15-12	hw_flush_en	R/W	0h	Write 0x1 to enable HW Marker trigger to generate a Flush
11-8	hw_marker_en	R/W	0h	Write 0x1 to enable HW Marker trigger to generate a Marker
7-5	RESERVED	R/W	X	
4	port_sel	R/W	0h	Select which bus to capture. 0 : DSS_HWA_DMA0 1 : DSS_HWA_DMA1
3	RESERVED	R/W	X	
2	crop_en	R/W	0h	Chop of the sign extension bits [15:12] for every 16 bits of data. 0 : Send all 16 bits 1 : Send lower 12 of 16 bits
1	snif_mode	R/W	0h	Select which bus to capture. 0 : Write Bus 1 : Read Bus
0	enable	R/W	0h	Indicates is the sniffer block is active or inactive. 0 : Capture is Disabled 1 : Sniffer Enabled

Copyright © 2025 Texas Instruments Incorporated

11.2.3.1.8.63 SRC4_RANGE_START0 Register (Offset = F8h) [Reset = 00000000h]

SRC4_RANGE_START0 is shown in Table 11-959.

Return to the Summary Table.

Table 11-959. SRC4_RANGE_START0 Register Field Descriptions

Bit	Field	Type	Reset	Description
31-0	start	R/W	0h	Range 0 Start address OR Start param number for HWA , which needs to be captured

Copyright © 2025 Texas Instruments Incorporated

11.2.3.1.8.64 SRC4_RANGE_END0 Register (Offset = FCh) [Reset = 00000000h]

SRC4_RANGE_END0 is shown in Table 11-960.

Return to the Summary Table.

Table 11-960. SRC4_RANGE_END0 Register Field Descriptions

Bit	Field	Type	Reset	Description
31-0	end	R/W	0h	Range 0 End address OR End param number for HWA , which needs to be captured

Copyright © 2025 Texas Instruments Incorporated

11.2.3.1.8.65 SRC4_RANGE_START1 Register (Offset = 100h) [Reset = 00000000h]

SRC4_RANGE_START1 is shown in Table 11-961.

Return to the Summary Table.

Table 11-961. SRC4_RANGE_START1 Register Field Descriptions

Bit	Field	Type	Reset	Description
31-0	start	R/W	0h	Range 1 Start address OR Start param number for HWA , which needs to be captured

Copyright © 2025 Texas Instruments Incorporated

11.2.3.1.8.66 SRC4_RANGE_END1 Register (Offset = 104h) [Reset = 00000000h]

SRC4_RANGE_END1 is shown in Table 11-962.

Return to the Summary Table.

Table 11-962. SRC4_RANGE_END1 Register Field Descriptions

Bit	Field	Type	Reset	Description
31-0	end	R/W	0h	Range 1 End address OR End param number for HWA , which needs to be captured

Copyright © 2025 Texas Instruments Incorporated

11.2.3.1.8.67 SRC4_RANGE_START2 Register (Offset = 108h) [Reset = 00000000h]

SRC4_RANGE_START2 is shown in Table 11-963.

Return to the Summary Table.

Table 11-963. SRC4_RANGE_START2 Register Field Descriptions

Bit	Field	Type	Reset	Description
31-0	start	R/W	0h	Range 2 Start address OR Start param number for HWA , which needs to be captured

Copyright © 2025 Texas Instruments Incorporated

11.2.3.1.8.68 SRC4_RANGE_END2 Register (Offset = 10Ch) [Reset = 00000000h]

SRC4_RANGE_END2 is shown in Table 11-964.

Return to the Summary Table.

Table 11-964. SRC4_RANGE_END2 Register Field Descriptions

Bit	Field	Type	Reset	Description
31-0	end	R/W	0h	Range 2 End address OR End param number for HWA , which needs to be captured

Copyright © 2025 Texas Instruments Incorporated

11.2.3.1.8.69 SRC4_RANGE_START3 Register (Offset = 110h) [Reset = 00000000h]

SRC4_RANGE_START3 is shown in Table 11-965.

Return to the Summary Table.

Table 11-965. SRC4_RANGE_START3 Register Field Descriptions

Bit	Field	Type	Reset	Description
31-0	start	R/W	0h	Range 3 Start address OR Start param number for HWA , which needs to be captured

Copyright © 2025 Texas Instruments Incorporated

11.2.3.1.8.70 SRC4_RANGE_END3 Register (Offset = 114h) [Reset = 00000000h]

SRC4_RANGE_END3 is shown in Table 11-966.

Return to the Summary Table.

Table 11-966. SRC4_RANGE_END3 Register Field Descriptions

Bit	Field	Type	Reset	Description
31-0	end	R/W	0h	Range 3 End address OR End param number for HWA , which needs to be captured

Copyright © 2025 Texas Instruments Incorporated

11.2.3.1.8.71 SRC4_SW_TRIGGER Register (Offset = 118h) [Reset = X]

SRC4_SW_TRIGGER is shown in Table 11-967.

Return to the Summary Table.

Table 11-967. SRC4_SW_TRIGGER Register Field Descriptions

Bit	Field	Type	Reset	Description
31-5	RESERVED	R/W	X	
4	flush	R/W	0h	Write 0x1 to trigger a Flush. A marker packet will also be inserted
3-1	RESERVED	R/W	X	
0	marker	R/W	0h	Write 0x1 to insert a Marker

Copyright © 2025 Texas Instruments Incorporated

11.2.3.1.8.72 SRC4_THRESHOLD Register (Offset = 11Ch) [Reset = X]

SRC4_THRESHOLD is shown in Table 11-968.

Return to the Summary Table.

Table 11-968. SRC4_THRESHOLD Register Field Descriptions

Bit	Field	Type	Reset	Description
31-10	RESERVED	R/W	X	
9-0	threshold	R/W	0h	The FIFO threshold to trigger writes from the Source FIFO. This value is in multiples of 32 bytes. If SRCx_BW_CTRL_WRITE_MODE is 0x0, then the bits [9:5] of this field need to be programmed to 0x0

Copyright © 2025 Texas Instruments Incorporated

11.2.3.1.8.73 SRC4_BW_CTRL Register (Offset = 120h) [Reset = X]

SRC4_BW_CTRL is shown in Table 11-969.

Return to the Summary Table.

Table 11-969. SRC4_BW_CTRL Register Field Descriptions

Bit	Field	Type	Reset	Description
31	RESERVED	R/W	X	
30-28	priority	R/W	0h	0 : Highest Dynamic Priority 7 : Lowest Dynamic Priority
27-21	RESERVED	R/W	X	
20-16	burst_size	R/W	0h	The burst_size is the minimum size for which the SRC will keep arbitration once it wins . The value in multiples of 32 bytes
15-12	RESERVED	R/W	X	
11-4	burst_num	R/W	0h	The FIFO threshold to trigger writes from the Source FIFO. Value to be aligned to 32 bytes [4:0] should be 0x0
3-1	RESERVED	R/W	X	
0	write_mode	R/W	0h	0 : Send data equivalent to threshold size. This can be set only if threshold is less than 1024 bytes 1 : Send data equivalent to burst_count * burst_size

Copyright © 2025 Texas Instruments Incorporated

11.2.3.1.8.74 SRC4_CHANNEL Register (Offset = 124h) [Reset = 00000000h]

SRC4_CHANNEL is shown in Table 11-970.

Return to the Summary Table.

Table 11-970. SRC4_CHANNEL Register Field Descriptions

Bit	Field	Type	Reset	Description
31-0	addr	R/W	0h	Configure the STM channel number on bits [31:8] . If channel number is 3 , configure bits [31:8] =3

Copyright © 2025 Texas Instruments Incorporated

11.2.3.1.8.75 SRC4_CHANNEL_CFG Register (Offset = 128h) [Reset = X]

SRC4_CHANNEL_CFG is shown in Table 11-971.

Return to the Summary Table.

Table 11-971. SRC4_CHANNEL_CFG Register Field Descriptions

Bit	Field	Type	Reset	Description
31-5	RESERVED	R/W	X	
4	NONDATA_TIMESTAMPED	R/W	0h	Selects whether the Non Data access for the Source is timestamped 0 : No Timestamp 1 : Timestamped
3	NONDATA_GUARANTEED	R/W	0h	Selects whether the Non Data access for the Source is Guaranteed or Invariant Timing 0 : Time Invariant 1 : Guaranteed
2	DATA_TIMESTAMPED	R/W	0h	Selects whether the Data access for the Source is timestamped 0 : No Timestamp 1 : Timestamped
1	DATA_MARKED	R/W	0h	Selects whether the Data access for the Source is marked 0 : Un-Marked 1 : Marked
0	DATA_GUARANTEED	R/W	0h	Selects whether the Data access for the Source is Guaranteed or Invariant Timing 0 : Time Invariant 1 : Guaranteed

Copyright © 2025 Texas Instruments Incorporated

11.2.3.1.8.76 SRC5_CTRL Register (Offset = 12Ch) [Reset = X]

SRC5_CTRL is shown in Table 11-972.

Return to the Summary Table.

Table 11-972. SRC5_CTRL Register Field Descriptions

Bit	Field	Type	Reset	Description
31-21	RESERVED	R/W	X	
20	gen_marker_on_flush	R/W	0h	Write 0x1 to generate a marker on Flush trigger
19-16	range_en	R/W	0h	Enable the corresponding range for data capture. Bit 0 : 0: Range 0 is disabled 1 : Range 0 is enableld
15-12	hw_flush_en	R/W	0h	Write 0x1 to enable HW Marker trigger to generate a Flush
11-8	hw_marker_en	R/W	0h	Write 0x1 to enable HW Marker trigger to generate a Marker
7-3	RESERVED	R/W	X	
2	crop_en	R/W	0h	Chop of the sign extension bits [15:12] for every 16 bits of data. 0 : Send all 16 bits 1 : Send lower 12 of 16 bits
1	snif_mode	R/W	0h	Select which bus to capture. 0 : Write Bus 1 : Read Bus
0	enable	R/W	0h	Indicates is the sniffer block is active or inactive. 0 : Captuere is Disabled 1 : Sniffer Enabled

Copyright © 2025 Texas Instruments Incorporated

11.2.3.1.8.77 SRC5_RANGE_START0 Register (Offset = 130h) [Reset = 00000000h]

SRC5_RANGE_START0 is shown in Table 11-973.

Return to the Summary Table.

Table 11-973. SRC5_RANGE_START0 Register Field Descriptions

Bit	Field	Type	Reset	Description
31-0	start	R/W	0h	Range 0 Start address OR Start param number for HWA , which needs to be captured

Copyright © 2025 Texas Instruments Incorporated

11.2.3.1.8.78 SRC5_RANGE_END0 Register (Offset = 134h) [Reset = 00000000h]

SRC5_RANGE_END0 is shown in Table 11-974.

Return to the Summary Table.

Table 11-974. SRC5_RANGE_END0 Register Field Descriptions

Bit	Field	Type	Reset	Description
31-0	end	R/W	0h	Range 0 End address OR End param number for HWA , which needs to be captured

Copyright © 2025 Texas Instruments Incorporated

11.2.3.1.8.79 SRC5_RANGE_START1 Register (Offset = 138h) [Reset = 00000000h]

SRC5_RANGE_START1 is shown in Table 11-975.

Return to the Summary Table.

Table 11-975. SRC5_RANGE_START1 Register Field Descriptions

Bit	Field	Type	Reset	Description
31-0	start	R/W	0h	Range 1 Start address OR Start param number for HWA , which needs to be captured

Copyright © 2025 Texas Instruments Incorporated

11.2.3.1.8.80 SRC5_RANGE_END1 Register (Offset = 13Ch) [Reset = 00000000h]

SRC5_RANGE_END1 is shown in Table 11-976.

Return to the Summary Table.

Table 11-976. SRC5_RANGE_END1 Register Field Descriptions

Bit	Field	Type	Reset	Description
31-0	end	R/W	0h	Range 1 End address OR End param number for HWA , which needs to be captured

Copyright © 2025 Texas Instruments Incorporated

11.2.3.1.8.81 SRC5_RANGE_START2 Register (Offset = 140h) [Reset = 00000000h]

SRC5_RANGE_START2 is shown in Table 11-977.

Return to the Summary Table.

Table 11-977. SRC5_RANGE_START2 Register Field Descriptions

Bit	Field	Type	Reset	Description
31-0	start	R/W	0h	Range 2 Start address OR Start param number for HWA , which needs to be captured

Copyright © 2025 Texas Instruments Incorporated

11.2.3.1.8.82 SRC5_RANGE_END2 Register (Offset = 144h) [Reset = 00000000h]

SRC5_RANGE_END2 is shown in Table 11-978.

Return to the Summary Table.

Table 11-978. SRC5_RANGE_END2 Register Field Descriptions

Bit	Field	Type	Reset	Description
31-0	end	R/W	0h	Range 2 End address OR End param number for HWA , which needs to be captured

Copyright © 2025 Texas Instruments Incorporated

11.2.3.1.8.83 SRC5_RANGE_START3 Register (Offset = 148h) [Reset = 00000000h]

SRC5_RANGE_START3 is shown in Table 11-979.

Return to the Summary Table.

Table 11-979. SRC5_RANGE_START3 Register Field Descriptions

Bit	Field	Type	Reset	Description
31-0	start	R/W	0h	Range 3 Start address OR Start param number for HWA , which needs to be captured

Copyright © 2025 Texas Instruments Incorporated

11.2.3.1.8.84 SRC5_RANGE_END3 Register (Offset = 14Ch) [Reset = 00000000h]

SRC5_RANGE_END3 is shown in Table 11-980.

Return to the Summary Table.

Table 11-980. SRC5_RANGE_END3 Register Field Descriptions

Bit	Field	Type	Reset	Description
31-0	end	R/W	0h	Range 3 End address OR End param number for HWA , which needs to be captured

Copyright © 2025 Texas Instruments Incorporated

11.2.3.1.8.85 SRC5_SW_TRIGGER Register (Offset = 150h) [Reset = X]

SRC5_SW_TRIGGER is shown in Table 11-981.

Return to the Summary Table.

Table 11-981. SRC5_SW_TRIGGER Register Field Descriptions

Bit	Field	Type	Reset	Description
31-5	RESERVED	R/W	X	
4	flush	R/W	0h	Write 0x1 to trigger a Flush. A marker packet will also be inserted
3-1	RESERVED	R/W	X	
0	marker	R/W	0h	Write 0x1 to insert a Marker

Copyright © 2025 Texas Instruments Incorporated

11.2.3.1.8.86 SRC5_THRESHOLD Register (Offset = 154h) [Reset = X]

SRC5_THRESHOLD is shown in Table 11-982.

Return to the Summary Table.

Table 11-982. SRC5_THRESHOLD Register Field Descriptions

Bit	Field	Type	Reset	Description
31-10	RESERVED	R/W	X	
9-0	threshold	R/W	0h	The FIFO threshold to trigger writes from the Source FIFO. This value is in multiples of 32 bytes. If SRCx_BW_CTRL_WRITE_MODE is 0x0, then the bits [9:5] of this field need to be programmed to 0x0

Copyright © 2025 Texas Instruments Incorporated

11.2.3.1.8.87 SRC5_BW_CTRL Register (Offset = 158h) [Reset = X]

SRC5_BW_CTRL is shown in Table 11-983.

Return to the Summary Table.

Table 11-983. SRC5_BW_CTRL Register Field Descriptions

Bit	Field	Type	Reset	Description
31	RESERVED	R/W	X	
30-28	priority	R/W	0h	0 : Highest Dynamic Priority 7 : Lowest Dynamic Priority
27-21	RESERVED	R/W	X	
20-16	burst_size	R/W	0h	The burst_size is the minimum size for which the SRC will keep arbitration once it wins . The value in multiples of 32 bytes
15-12	RESERVED	R/W	X	
11-4	burst_num	R/W	0h	The FIFO threshold to trigger writes from the Source FIFO. Value to be aligned to 32 bytes [4:0] should be 0x0
3-1	RESERVED	R/W	X	
0	write_mode	R/W	0h	0 : Send data equivalent to threshold size. This can be set only if threshold is less than 1024 bytes 1 : Send data equivalent to burst_count * burst_size

Copyright © 2025 Texas Instruments Incorporated

11.2.3.1.8.88 SRC5_CHANNEL Register (Offset = 15Ch) [Reset = 00000000h]

SRC5_CHANNEL is shown in Table 11-984.

Return to the Summary Table.

Table 11-984. SRC5_CHANNEL Register Field Descriptions

Bit	Field	Type	Reset	Description
31-0	addr	R/W	0h	Configure the STM channel number on bits [31:8] . If channel number is 3 , configure bits [31:8] =3

Copyright © 2025 Texas Instruments Incorporated

11.2.3.1.8.89 SRC5_CHANNEL_CFG Register (Offset = 160h) [Reset = X]

SRC5_CHANNEL_CFG is shown in Table 11-985.

Return to the Summary Table.

Table 11-985. SRC5_CHANNEL_CFG Register Field Descriptions

Bit	Field	Type	Reset	Description
31-5	RESERVED	R/W	X	
4	NONDATA_TIMESTAMPED	R/W	0h	Selects whether the Non Data access for the Source is timestamped 0 : No Timestamp 1 : Timestamped
3	NONDATA_GUARANTEED	R/W	0h	Selects whether the Non Data access for the Source is Guaranteed or Invariant Timing 0 : Time Invariant 1 : Guaranteed
2	DATA_TIMESTAMPED	R/W	0h	Selects whether the Data access for the Source is timestamped 0 : No Timestamp 1 : Timestamped
1	DATA_MARKED	R/W	0h	Selects whether the Data access for the Source is marked 0 : Un-Marked 1 : Marked
0	DATA_GUARANTEED	R/W	0h	Selects whether the Data access for the Source is Guaranteed or Invariant Timing 0 : Time Invariant 1 : Guaranteed

Copyright © 2025 Texas Instruments Incorporated

11.2.3.1.8.90 SRC0_STATUS Register (Offset = 1D4h) [Reset = X]

SRC0_STATUS is shown in Table 11-986.

Return to the Summary Table.

Table 11-986. SRC0_STATUS Register Field Descriptions

Bit	Field	Type	Reset	Description
31-16	status	R	2h	Status of the Sniffer for Source 0
15-4	RESERVED	R/W	X	
3	overflow_err	R/W	0h	Source Overflow Error is generated with the Source FIFO is full and there is no space to write the sniffed data
2	flush_err	R/W	0h	Flush Err is generated on Multiple Flush requests
1	data_miss	R/W	0h	Data Miss Erro is generated when a Flush or Marker Requested causes Miss in the Sniffer data
0	flush_done	R/W	0h	Flush Done is generated on completion of a flush request

Copyright © 2025 Texas Instruments Incorporated

11.2.3.1.8.91 SRC1_STATUS Register (Offset = 1D8h) [Reset = X]

SRC1_STATUS is shown in Table 11-987.

Return to the Summary Table.

Table 11-987. SRC1_STATUS Register Field Descriptions

Bit	Field	Type	Reset	Description
31-16	status	R	2h	Status of the Sniffer for Source 1
15-4	RESERVED	R/W	X	
3	overflow_err	R/W	0h	Source Overflow Error is generated with the Source FIFO is full and there is no space to write the sniffed data
2	flush_err	R/W	0h	Flush Err is generated on Multiple Flush requests
1	data_miss	R/W	0h	Data Miss Erro is generated when a Flush or Marker Requested causes Miss in the Sniffer data
0	flush_done	R/W	0h	Flush Done is generated on completion of a flush request

Copyright © 2025 Texas Instruments Incorporated

11.2.3.1.8.92 SRC2_STATUS Register (Offset = 1DCh) [Reset = X]

SRC2_STATUS is shown in Table 11-988.

Return to the Summary Table.

Table 11-988. SRC2_STATUS Register Field Descriptions

Bit	Field	Type	Reset	Description
31-16	status	R	2h	Status of the Sniffer for Source 2
15-4	RESERVED	R/W	X	
3	overflow_err	R/W	0h	Source Overflow Error is generated with the Source FIFO is full and there is no space to write the sniffed data
2	flush_err	R/W	0h	Flush Err is generated on Multiple Flush requests
1	data_miss	R/W	0h	Data Miss Erro is generated when a Flush or Marker Requested causes Miss in the Sniffer data
0	flush_done	R/W	0h	Flush Done is generated on completion of a flush request

Copyright © 2025 Texas Instruments Incorporated

11.2.3.1.8.93 SRC3_STATUS Register (Offset = 1E0h) [Reset = X]

SRC3_STATUS is shown in Table 11-989.

Return to the Summary Table.

Table 11-989. SRC3_STATUS Register Field Descriptions

Bit	Field	Type	Reset	Description
31-16	status	R	2h	Status of the Sniffer for Source 3
15-4	RESERVED	R/W	X	
3	overflow_err	R/W	0h	Source Overflow Error is generated with the Source FIFO is full and there is no space to write the sniffed data
2	flush_err	R/W	0h	Flush Err is generated on Multiple Flush requests
1	data_miss	R/W	0h	Data Miss Erro is generated when a Flush or Marker Requested causes Miss in the Sniffer data
0	flush_done	R/W	0h	Flush Done is generated on completion of a flush request

Copyright © 2025 Texas Instruments Incorporated

11.2.3.1.8.94 SRC4_STATUS Register (Offset = 1E4h) [Reset = X]

SRC4_STATUS is shown in Table 11-990.

Return to the Summary Table.

Table 11-990. SRC4_STATUS Register Field Descriptions

Bit	Field	Type	Reset	Description
31-16	status	R	2h	Status of the Sniffer for Source 4
15-4	RESERVED	R/W	X	
3	overflow_err	R/W	0h	Source Overflow Error is generated with the Source FIFO is full and there is no space to write the sniffed data
2	flush_err	R/W	0h	Flush Err is generated on Multiple Flush requests
1	data_miss	R/W	0h	Data Miss Erro is generated when a Flush or Marker Requested causes Miss in the Sniffer data
0	flush_done	R/W	0h	Flush Done is generated on completion of a flush request

Copyright © 2025 Texas Instruments Incorporated

11.2.3.1.8.95 SRC5_STATUS Register (Offset = 1E8h) [Reset = X]

SRC5_STATUS is shown in Table 11-991.

Return to the Summary Table.

Table 11-991. SRC5_STATUS Register Field Descriptions

Bit	Field	Type	Reset	Description
31-16	status	R	2h	Status of the Sniffer for Source 5
15-4	RESERVED	R/W	X	
3	overflow_err	R/W	0h	Source Overflow Error is generated with the Source FIFO is full and there is no space to write the sniffed data
2	flush_err	R/W	0h	Flush Err is generated on Multiple Flush requests
1	data_miss	R/W	0h	Data Miss Erro is generated when a Flush or Marker Requested causes Miss in the Sniffer data
0	flush_done	R/W	0h	Flush Done is generated on completion of a flush request

Copyright © 2025 Texas Instruments Incorporated

11.2.3.1.8.96 INTERRUPT_MASK Register (Offset = 1ECh) [Reset = FFFFFFFFh]

INTERRUPT_MASK is shown in Table 11-992.

Return to the Summary Table.

Table 11-992. INTERRUPT_MASK Register Field Descriptions

Bit	Field	Type	Reset	Description
31-0	mask	R/W	FFFFFFFFh	MDO Infra Interrupt Mask

Copyright © 2025 Texas Instruments Incorporated

11.2.3.1.8.97 HW_SPARE_RW0 Register (Offset = FD0h) [Reset = 00000000h]

HW_SPARE_RW0 is shown in Table 11-993.

Return to the Summary Table.

Table 11-993. HW_SPARE_RW0 Register Field Descriptions

Bit	Field	Type	Reset	Description
31-0	hw_spare_rw0	R/W	0h	Reserved for HW R&D

Copyright © 2025 Texas Instruments Incorporated

11.2.3.1.8.98 HW_SPARE_RW1 Register (Offset = FD4h) [Reset = 00000000h]

HW_SPARE_RW1 is shown in Table 11-994.

Return to the Summary Table.

Table 11-994. HW_SPARE_RW1 Register Field Descriptions

Bit	Field	Type	Reset	Description
31-0	hw_spare_rw1	R/W	0h	Reserved for HW R&D

Copyright © 2025 Texas Instruments Incorporated

11.2.3.1.8.99 HW_SPARE_RW2 Register (Offset = FD8h) [Reset = 00000000h]

HW_SPARE_RW2 is shown in Table 11-995.

Return to the Summary Table.

Table 11-995. HW_SPARE_RW2 Register Field Descriptions

Bit	Field	Type	Reset	Description
31-0	hw_spare_rw2	R/W	0h	Reserved for HW R&D

Copyright © 2025 Texas Instruments Incorporated

11.2.3.1.8.100 HW_SPARE_RW3 Register (Offset = FDCh) [Reset = 00000000h]

HW_SPARE_RW3 is shown in Table 11-996.

Return to the Summary Table.

Table 11-996. HW_SPARE_RW3 Register Field Descriptions

Bit	Field	Type	Reset	Description
31-0	hw_spare_rw3	R/W	0h	Reserved for HW R&D

Copyright © 2025 Texas Instruments Incorporated

11.2.3.1.8.101 HW_SPARE_RO0 Register (Offset = FE0h) [Reset = 00000000h]

HW_SPARE_RO0 is shown in Table 11-997.

Return to the Summary Table.

Table 11-997. HW_SPARE_RO0 Register Field Descriptions

Bit	Field	Type	Reset	Description
31-0	hw_spare_ro0	R	0h	Reserved for HW R&D

Copyright © 2025 Texas Instruments Incorporated

11.2.3.1.8.102 HW_SPARE_RO1 Register (Offset = FE4h) [Reset = 00000000h]

HW_SPARE_RO1 is shown in Table 11-998.

Return to the Summary Table.

Table 11-998. HW_SPARE_RO1 Register Field Descriptions

Bit	Field	Type	Reset	Description
31-0	hw_spare_ro1	R	0h	Reserved for HW R&D

Copyright © 2025 Texas Instruments Incorporated

11.2.3.1.8.103 HW_SPARE_RO2 Register (Offset = FE8h) [Reset = 00000000h]

HW_SPARE_RO2 is shown in Table 11-999.

Return to the Summary Table.

Table 11-999. HW_SPARE_RO2 Register Field Descriptions

Bit	Field	Type	Reset	Description
31-0	hw_spare_ro2	R	0h	Reserved for HW R&D

Copyright © 2025 Texas Instruments Incorporated

11.2.3.1.8.104 HW_SPARE_RO3 Register (Offset = FECh) [Reset = 00000000h]

HW_SPARE_RO3 is shown in Table 11-1000.

Return to the Summary Table.

Table 11-1000. HW_SPARE_RO3 Register Field Descriptions

Bit	Field	Type	Reset	Description
31-0	hw_spare_ro3	R	0h	Reserved for HW R&D

Copyright © 2025 Texas Instruments Incorporated

11.2.3.1.8.105 HW_SPARE_WPH Register (Offset = FF0h) [Reset = 00000000h]

HW_SPARE_WPH is shown in Table 11-1001.

Return to the Summary Table.

Table 11-1001. HW_SPARE_WPH Register Field Descriptions

Bit	Field	Type	Reset	Description
31-0	hw_spare_wph	R/W	0h	Reserved for HW R&D

Copyright © 2025 Texas Instruments Incorporated

11.2.3.1.8.106 HW_SPARE_REC Register (Offset = FF4h) [Reset = 00000000h]

HW_SPARE_REC is shown in Table 11-1002.

Return to the Summary Table.

Table 11-1002. HW_SPARE_REC Register Field Descriptions

Bit	Field	Type	Reset	Description
31	hw_spare_rec31	R/W	0h	Reserved for HW R&D
30	hw_spare_rec30	R/W	0h	Reserved for HW R&D
29	hw_spare_rec29	R/W	0h	Reserved for HW R&D
28	hw_spare_rec28	R/W	0h	Reserved for HW R&D
27	hw_spare_rec27	R/W	0h	Reserved for HW R&D
26	hw_spare_rec26	R/W	0h	Reserved for HW R&D
25	hw_spare_rec25	R/W	0h	Reserved for HW R&D
24	hw_spare_rec24	R/W	0h	Reserved for HW R&D
23	hw_spare_rec23	R/W	0h	Reserved for HW R&D
22	hw_spare_rec22	R/W	0h	Reserved for HW R&D
21	hw_spare_rec21	R/W	0h	Reserved for HW R&D
20	hw_spare_rec20	R/W	0h	Reserved for HW R&D
19	hw_spare_rec19	R/W	0h	Reserved for HW R&D
18	hw_spare_rec18	R/W	0h	Reserved for HW R&D
17	hw_spare_rec17	R/W	0h	Reserved for HW R&D
16	hw_spare_rec16	R/W	0h	Reserved for HW R&D
15	hw_spare_rec15	R/W	0h	Reserved for HW R&D
14	hw_spare_rec14	R/W	0h	Reserved for HW R&D
13	hw_spare_rec13	R/W	0h	Reserved for HW R&D
12	hw_spare_rec12	R/W	0h	Reserved for HW R&D
11	hw_spare_rec11	R/W	0h	Reserved for HW R&D
10	hw_spare_rec10	R/W	0h	Reserved for HW R&D
9	hw_spare_rec9	R/W	0h	Reserved for HW R&D
8	hw_spare_rec8	R/W	0h	Reserved for HW R&D
7	hw_spare_rec7	R/W	0h	Reserved for HW R&D
6	hw_spare_rec6	R/W	0h	Reserved for HW R&D
5	hw_spare_rec5	R/W	0h	Reserved for HW R&D
4	hw_spare_rec4	R/W	0h	Reserved for HW R&D
3	hw_spare_rec3	R/W	0h	Reserved for HW R&D
2	hw_spare_rec2	R/W	0h	Reserved for HW R&D
1	hw_spare_rec1	R/W	0h	Reserved for HW R&D
0	hw_spare_rec0	R/W	0h	Reserved for HW R&D

Copyright © 2025 Texas Instruments Incorporated

11.2.3.1.8.107 LOCK0_KICK0 Register (Offset = 1008h) [Reset = 00000000h]

LOCK0_KICK0 is shown in Table 11-1003.

Return to the Summary Table.

- KICK0 component

Table 11-1003. LOCK0_KICK0 Register Field Descriptions

Bit	Field	Type	Reset	Description
31-0	LOCK0_kick0	R/W	0h	RESERVED, write has no impact

Copyright © 2025 Texas Instruments Incorporated

11.2.3.1.8.108 LOCK0_KICK1 Register (Offset = 100Ch) [Reset = 00000000h]

LOCK0_KICK1 is shown in Table 11-1004.

Return to the Summary Table.

- KICK1 component

Table 11-1004. LOCK0_KICK1 Register Field Descriptions

Bit	Field	Type	Reset	Description
31-0	LOCK0_kick1	R/W	0h	RESERVED, write has no impact

Copyright © 2025 Texas Instruments Incorporated

11.2.3.1.8.109 intr_raw_status Register (Offset = 1010h) [Reset = X]

intr_raw_status is shown in Table 11-1005.

Return to the Summary Table.

Interrupt Raw Status/Set Register

Table 11-1005. intr_raw_status Register Field Descriptions

Bit	Field	Type	Reset	Description
31-4	RESERVED	R/W	X	
3	proxy_err	R/W1S	0h	Proxy0 access violation error. Raw status is read. Write a 1 to set the status. Writing a 0 has no effect.
2	kick_err	R/W1S	0h	Kick access violation error. Raw status is read. Write a 1 to set the status. Writing a 0 has no effect.
1	addr_err	R/W1S	0h	Addressing violation error. Raw status is read. Write a 1 to set the status. Writing a 0 has no effect.
0	prot_err	R/W1S	0h	Protection violation error. Raw status is read. Write a 1 to set the status. Writing a 0 has no effect.

Copyright © 2025 Texas Instruments Incorporated

11.2.3.1.8.110 intr_enabled_status_clear Register (Offset = 1014h) [Reset = X]

intr_enabled_status_clear is shown in Table 11-1006.

Return to the Summary Table.

Interrupt Enabled Status/Clear register

Table 11-1006. intr_enabled_status_clear Register Field Descriptions

Bit	Field	Type	Reset	Description
31-4	RESERVED	R/W	X	
3	enabled_proxy_err	R/W1C	0h	Proxy0 access violation error. Enabled status is read. Write a 1 to clear the status. Writing a 0 has no effect.
2	enabled_kick_err	R/W1C	0h	Kick access violation error. Enabled status is read. Write a 1 to clear the status. Writing a 0 has no effect.
1	enabled_addr_err	R/W1C	0h	Addressing violation error. Enabled status is read. Write a 1 to clear the status. Writing a 0 has no effect.
0	enabled_prot_err	R/W1C	0h	Protection violation error. Enabled status is read. Write a 1 to clear the status. Writing a 0 has no effect.

Copyright © 2025 Texas Instruments Incorporated

11.2.3.1.8.111 intr_enable Register (Offset = 1018h) [Reset = X]

intr_enable is shown in Table 11-1007.

Return to the Summary Table.

Interrupt Enable register

Table 11-1007. intr_enable Register Field Descriptions

Bit	Field	Type	Reset	Description
31-4	RESERVED	R/W	X	
3	proxy_err_en	R/W1S	0h	Proxy0 access violation error enable. Write a 1 to set the enable. Writing a 0 has no effect.
2	kick_err_en	R/W1S	0h	Kick access violation error enable. Write a 1 to set the enable. Writing a 0 has no effect.
1	addr_err_en	R/W1S	0h	Addressing violation error enable. Write a 1 to set the enable. Writing a 0 has no effect.
0	prot_err_en	R/W1S	0h	Protection violation error enable. Write a 1 to set the enable. Writing a 0 has no effect.

Copyright © 2025 Texas Instruments Incorporated

11.2.3.1.8.112 intr_enable_clear Register (Offset = 101Ch) [Reset = X]

intr_enable_clear is shown in Table 11-1008.

Return to the Summary Table.

Interrupt Enable Clear register

Table 11-1008. intr_enable_clear Register Field Descriptions

Bit	Field	Type	Reset	Description
31-4	RESERVED	R/W	X	
3	proxy_err_en_clr	R/W1C	0h	Proxy0 access violation error enable clear. Write a 1 to clear the enable. Writing a 0 has no effect.
2	kick_err_en_clr	R/W1C	0h	Kick access violation error enable clear. Write a 1 to clear the enable. Writing a 0 has no effect.
1	addr_err_en_clr	R/W1C	0h	Addressing violation error enable clear. Write a 1 to clear the enable. Writing a 0 has no effect.
0	prot_err_en_clr	R/W1C	0h	Protection violation error enable clear. Write a 1 to clear the enable. Writing a 0 has no effect.

Copyright © 2025 Texas Instruments Incorporated

11.2.3.1.8.113 eoi Register (Offset = 1020h) [Reset = X]

eoi is shown in Table 11-1009.

Return to the Summary Table.

EOI register

Table 11-1009. eoi Register Field Descriptions

Bit	Field	Type	Reset	Description
31-8	RESERVED	R/W	X	
7-0	eoi_vector	R/W	0h	EOI vector value. Write this with interrupt distribution value in the chip.

Copyright © 2025 Texas Instruments Incorporated

11.2.3.1.8.114 fault_address Register (Offset = 1024h) [Reset = 00000000h]

fault_address is shown in Table 11-1010.

Return to the Summary Table.

Fault Address register

Table 11-1010. fault_address Register Field Descriptions

Bit	Field	Type	Reset	Description
31-0	fault_addr	R	0h	Fault Address.

Copyright © 2025 Texas Instruments Incorporated

11.2.3.1.8.115 fault_type_status Register (Offset = 1028h) [Reset = X]

fault_type_status is shown in Table 11-1011.

Return to the Summary Table.

Fault Type Status register

Table 11-1011. fault_type_status Register Field Descriptions

Bit	Field	Type	Reset	Description
31-7	RESERVED	R	X	
6	fault_ns	R	0h	Non-secure access.
5-0	fault_type	R	0h	Fault Type 10_0000 = Supervisor read fault - priv = 1 dir = 1 dtype ! = 1 01_0000 = Supervisor write fault - priv = 1 dir = 0 00_1000 = Supervisor execute fault - priv = 1 dir = 1 dtype = 1 00_0100 = User read fault - priv = 0 dir = 1 dtype = 1 00_0010 = User write fault - priv = 0 dir = 0 00_0001 = User execute fault - priv = 0 dir = 1 dtype = 1 00_0000 = No fault

Copyright © 2025 Texas Instruments Incorporated

11.2.3.1.8.116 fault_attr_status Register (Offset = 102Ch) [Reset = 00000000h]

fault_attr_status is shown in Table 11-1012.

Return to the Summary Table.

Fault Attribute Status register

Table 11-1012. fault_attr_status Register Field Descriptions

Bit	Field	Type	Reset	Description
31-20	fault_xid	R	0h	XID.
19-8	fault_routeid	R	0h	Route ID.
7-0	fault_privid	R	0h	Privilege ID.

Copyright © 2025 Texas Instruments Incorporated

11.2.3.1.8.117 fault_clear Register (Offset = 1030h) [Reset = X]

fault_clear is shown in Table 11-1013.

Return to the Summary Table.

Fault Clear register

Table 11-1013. fault_clear Register Field Descriptions

Bit	Field	Type	Reset	Description
31-1	RESERVED	W	X	
0	fault_clr	W	0h	Fault clear. Writing a 1 clears the current fault. Writing a 0 has no effect.

11.2.3.2 Aurora TX IP

11.2.3.2.1 Features Supported

The Aurora Tx IP has the following features:

- Configurable 4/2/1 lane of operation
- Transmit data compliant to Aurora 8B/10B Serial Simplex Operation
- Transmit data compliant to Aurora 64B/66B Serial Simplex Operation
- Only Tx support. No Rx support
- Supports input format for Trace Wrapper Protocol (TWP) from ARM Coresight CS-TPIU IP
- Support for packing TWP packets as an Aurora User PDU
- Configurable option to append CRC for TWP data
- Configurable option to drop TWP padding packets
- Support for transmission of user-defined flow control packet for overflow condition

Note

Copyright © 2025 Texas Instruments Incorporated

11.2.3.2.2 Block Diagram

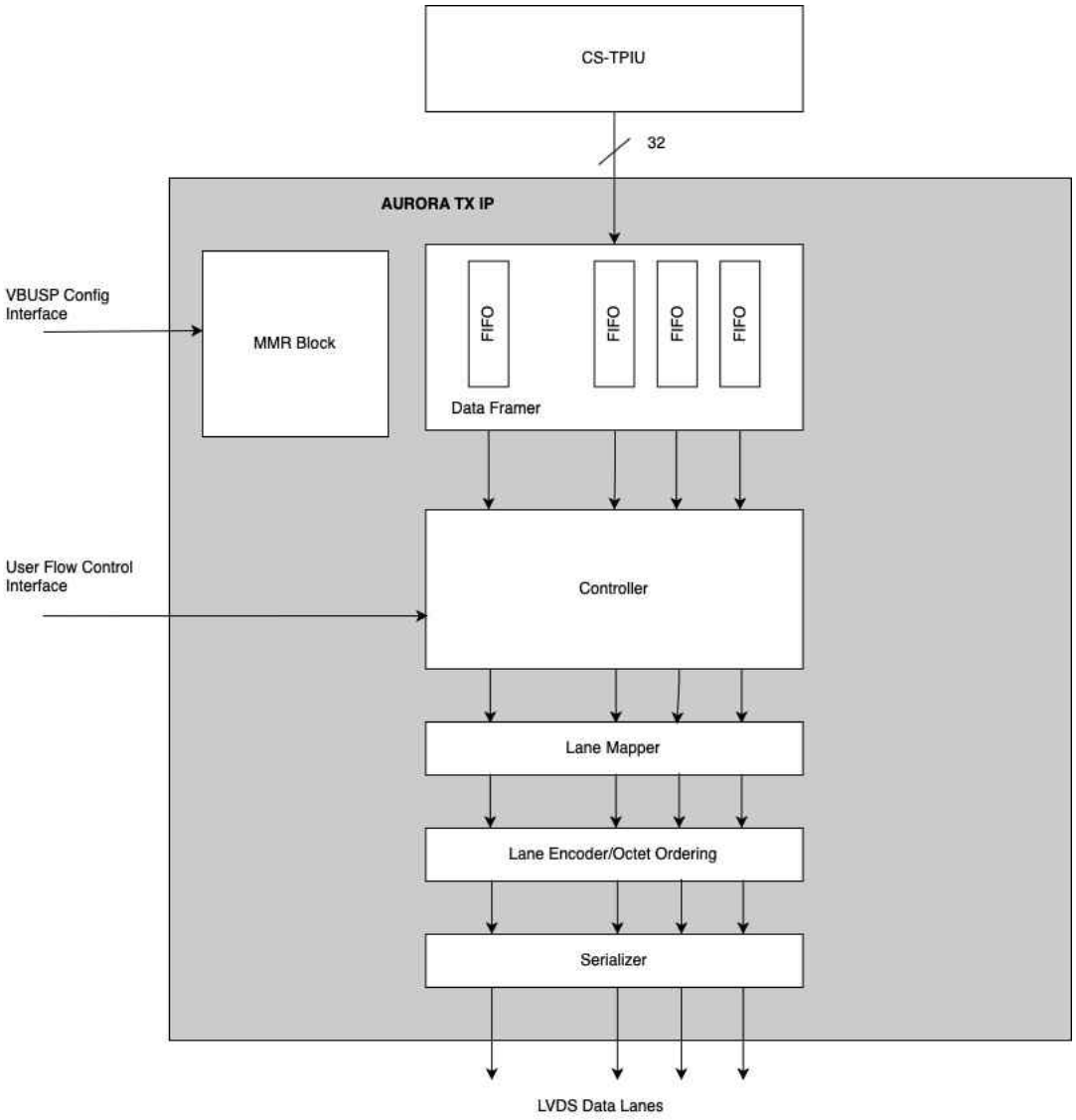

Figure 11-160. Block Diagram

11.2.3.2.2.1 Aurora UDP Packet Format

The following is the structure of a user data packet.



Figure 11-161. UDP Packet for 8b10b

Copyright © 2025 Texas Instruments Incorporated



Figure 11-162. UDP Packet for 64b66b

11.2.3.2.2.1.1 Header Data (Optional)

An optional 64-byte frame header is inserted at the start of every aurora packet. The header data should be written to the AURORA_TX_UDP_FRAME_HEADERn registers. AURORA_UDP_FRAME_HEADERn is an array of 32-bit registers numbered from 0 to 15.

The AURORA_TX_UDP_CONFIG_FRAME_HEADER_EN of AURORA_TX_UDP_CONFIG register specifies the amount of header data to be sent with the aurora packets in multiples of 4 bytes.

For example, if AURORA_TX_UDP_CONFIG_FRAME_HEADER_EN = 4, a 128-bit header is sent.

11.2.3.2.2.1.2 Packet Completion

The incoming TWP data is packetized to an aurora packet based on the AURORA_TX_UDP_CONFIG:AURORA_TX_UDP_CONFIG_PACK_MODE_SEL register. The available options are:

- Number of bytes transferred. This enables the delineation of aurora packets based on the number of received bytes through the TPIU interface. Configuring the AURORA_TX_UDP_SIZE register specifies the number of bytes. This register value should be a multiple of 4 bytes, as the input TPIU data-width is 32 bits. A write to the AURORA_TX_EOP_REQ_TRIGGER ends the packet abruptly without waiting for the AURORA_TX_UDP_SIZE to be completed. AURORA_TX_UDP_SIZE should be programmed to a value greater than 4.
- Number of TWP packets. This enables the delineation of aurora packets based on the number of TWP packets. Configuring the AURORA_TX_UDP_SIZE register specifies the number of packets. A write to the AURORA_TX_EOP_REQ_TRIGGER ends the packet abruptly without waiting for the AURORA_TX_UDP_SIZE to be completed.
- Software End of Packet signal. The third option enables only the AURORA_TX_EOP_REQ_TRIGGER to end the packet. An aurora packet without an ECP or SEP block is possible if this value is not asserted.

11.2.3.2.2.1.3 Idle Filtering

The idle filter removes all the padding packets from the input TWP stream for transmission through the aurora interface.

The TWP idle filter can be enabled by writing a value of 1 to the AURORA_TX_UDP_CONFIG:TWP_IDLE_FILTER_EN register.

11.2.3.2.2.1.4 Frame Sync Compression

The frame sync compression transmits N consecutive frame syncs and ignores all subsequent consecutive frame syncs. It can be used to avoid sending long frame sync packets when data is not available.

11.2.3.2.2.1.5 CRC

A CRC is computed on 32 bits of input data in a single clock cycle. The computed CRC is inserted at the end of an aurora packet. The CRC insertion is an optional feature which can be enabled by writing a value of 1 to the register AURORA_TX_UDP_CONFIG:CRC_EN.

- A 16-bit CRC is appended in 8b10b mode: $X^{16} + X^{15} + X^2 + 1$
- A 32-bit CRC is appended in 64b66b mode: $X^{32} + X^{26} + X^{23} + X^{22} + X^{16} + X^{12} + X^{11} + X^{10} + X^8 + X^7 + X^5 + X^4 + X^2 + X + 1$

Copyright © 2025 Texas Instruments Incorporated

11.2.3.2.2.1.6 TEST PATTERN ENABLE

When test mode is enabled, a linear feedback shift register (LSFR) is used to generate a test pattern which is transmitted as user data. Only CRC and pattern data is transmitted in a frame. The polynomial used for the LSFR is $x^{65} + x^{47} + 1$ with initial seed 0x1_6B61A3B5_EF91F65A.

A Ramp pattern is also possible. This generates data in increments of 0x1. To enable this pattern, set the AURORA_TX_TESTPATTERN_CTRL:RAMP_EN bit to 0x1.

11.2.3.2.2.1.7 BYPASS AURORA

Aurora protocol can be disabled by writing a value of 1 to the register AURORA_TX_UDP_CONFIG.BYPASS_EN.

In this mode, the unencoded 8b/10b User Data Packets are transmitted.

The LVDS Pad : LVDS Bit Clk is available.

An additional LVDS Pad is available : LVDS Frame Clock signal to indicate that atleast 1 lane has a Start of Packet/End of Packet.

No Initialization/Clock Compensation/UFC etc is sent. Only UDP.

When the receiver sees Frame Clock high, it indicates one of the following:

- Lane 0 is transmitting an SCP pair (unencoded). This is the “Start of a new packet”.
- One of the lanes is transmitting an ECP pair (unencoded) and subsequent higher lanes are transmitting an Idle packet. This is “End of packet”.

Because the uer has the qualifier of Frame Clock for SCP/ECP, there is no mistaking data as control.

LVDS Clock, Frame Clock, and data timing relationship are the same in CBUFF LVDS transmission as in AM273x and mmWave Gen1 Devices. The protocol relationship is as mentioned above.

11.2.3.2.3 Flow Control

11.2.3.2.3.1 Stall and Overflow Mechanism

Data loss due to overflow can occur only at the sniffer. There is no data loss at any other point in the chain. Overflow information is sent as an interrupt to the CPU and the Aurora Tx IP.

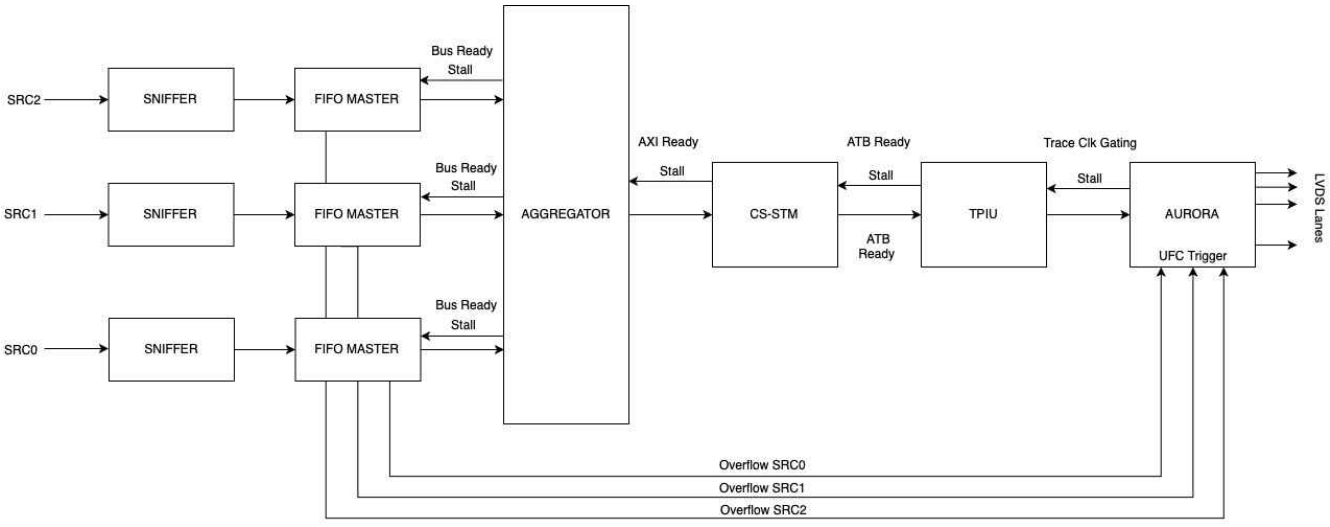

Figure 11-163. Stall and Overflow Mechanism

11.2.3.2.3.2 Aurora User Flow Control Packet

The Aurora Tx IP on receiving an overflow from a source can generate as User Flow Control Packet.

Copyright © 2025 Texas Instruments Incorporated

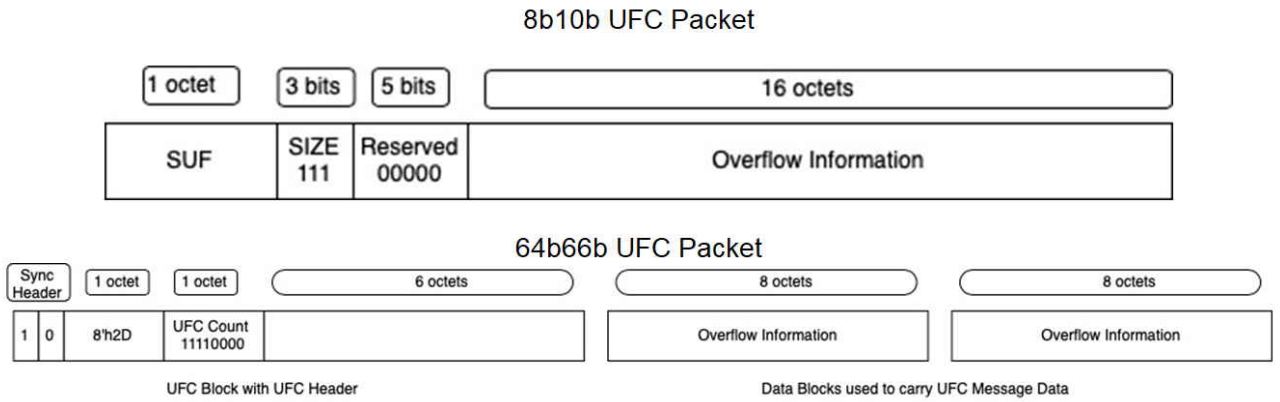

Figure 11-164. Aurora User Flow Control Packet

11.2.3.2.3.3 Aurora User Flow Control Packet Overflow Information Mapping

The following is the contents of the UFC packet.

SW_MSG0 is the data in register AURORA_TX_UFC_MESSAGE0

SW_MSG1 is the data in register AURORA_TX_UFC_MESSAGE1

Table 11-1014 shows the mapping for the hardware message.

Table 11-1014. HW_MSG Mapping

HW_MSG[63:0] Mapping	Integration
Bit [0]	Indicates SRC0 Overflow
Bit [1]	Indicates SRC1 Overflow
Bit [2]	Indicates SRC2 Overflow
Bit [3]	Indicates SRC3 Overflow
Bit [4]	Indicates SRC4 Overflow
Bit [5]	Indicates SRC5 Overflow
Bit [63:6]	Reserved. Tied Low

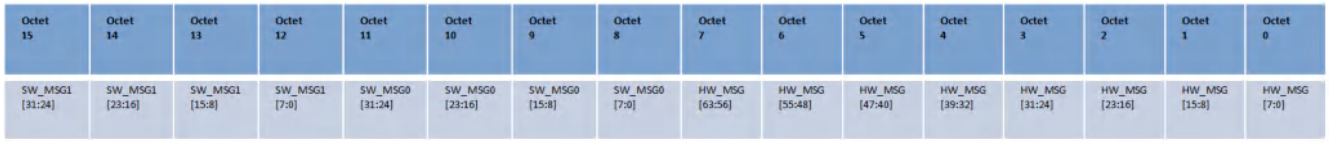

Figure 11-165. 64b66b

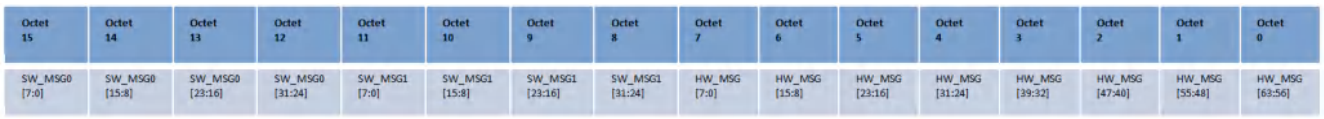

Figure 11-166. 8b10b

Copyright © 2025 Texas Instruments Incorporated

11.2.3.2.4 Ordering

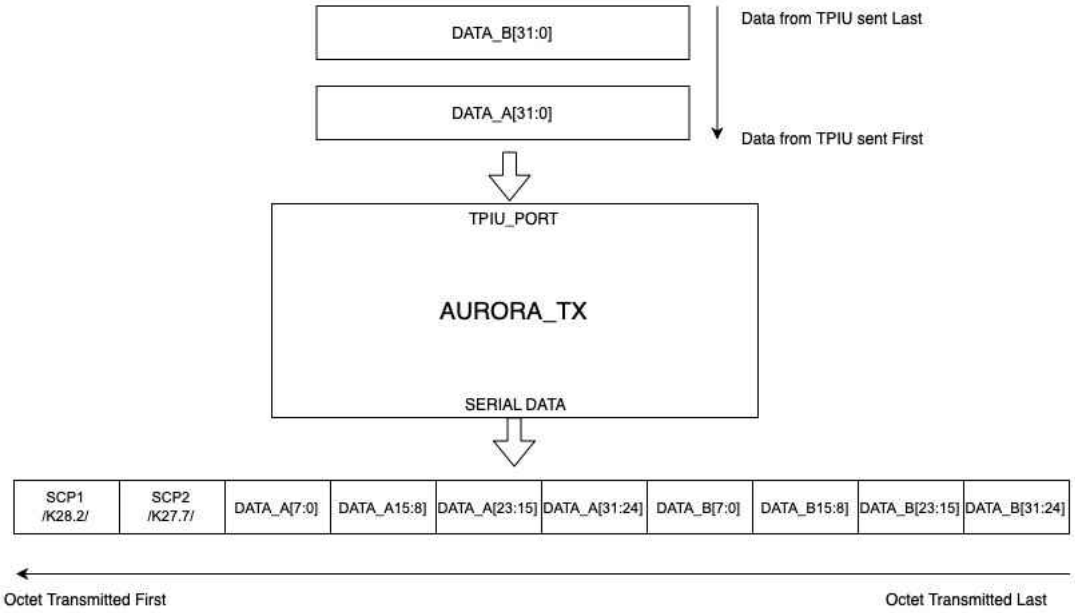

Figure 11-167. Octet Ordering 8b/10b

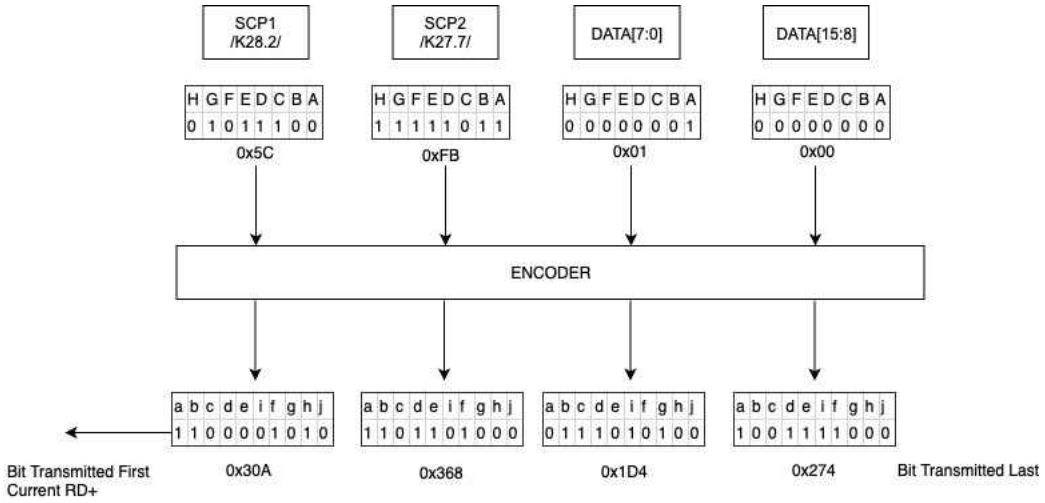

Figure 11-168. Transmission Ordering 8b/10b

Copyright © 2025 Texas Instruments Incorporated

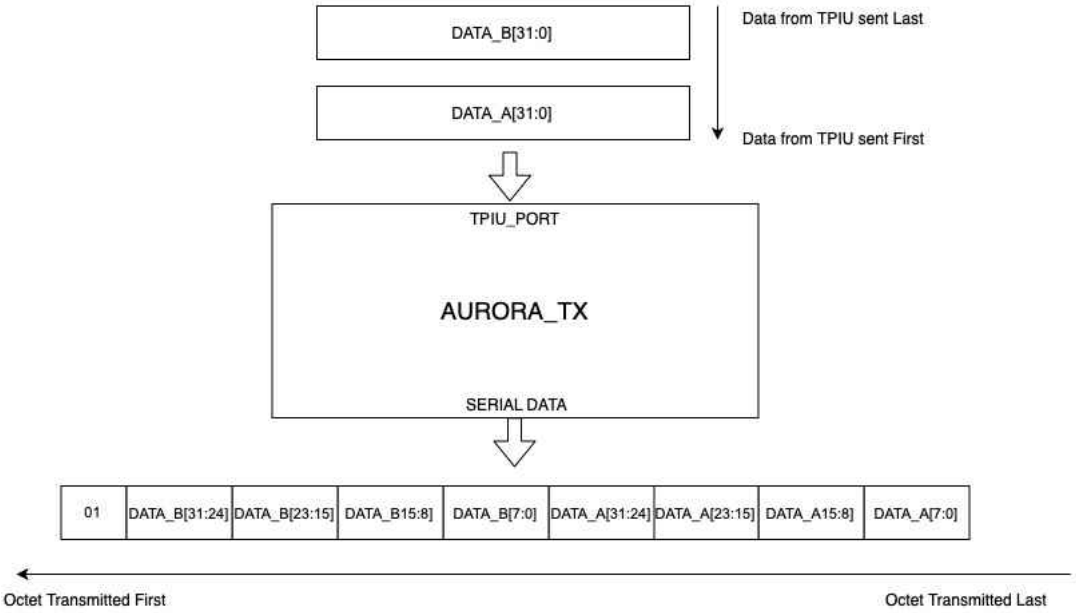

Figure 11-169. Octet Ordering 64b/66b

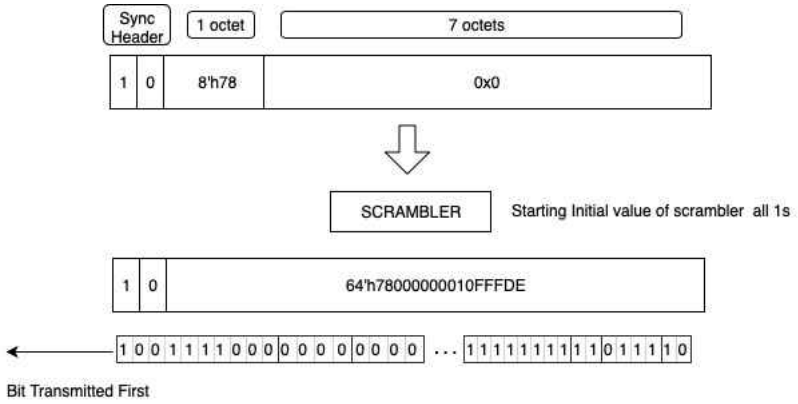

Figure 11-170. Transmission Ordering 64b/66b

Copyright © 2025 Texas Instruments Incorporated

11.2.3.2.5 Global Flush

11.2.3.2.5.1 Architecture

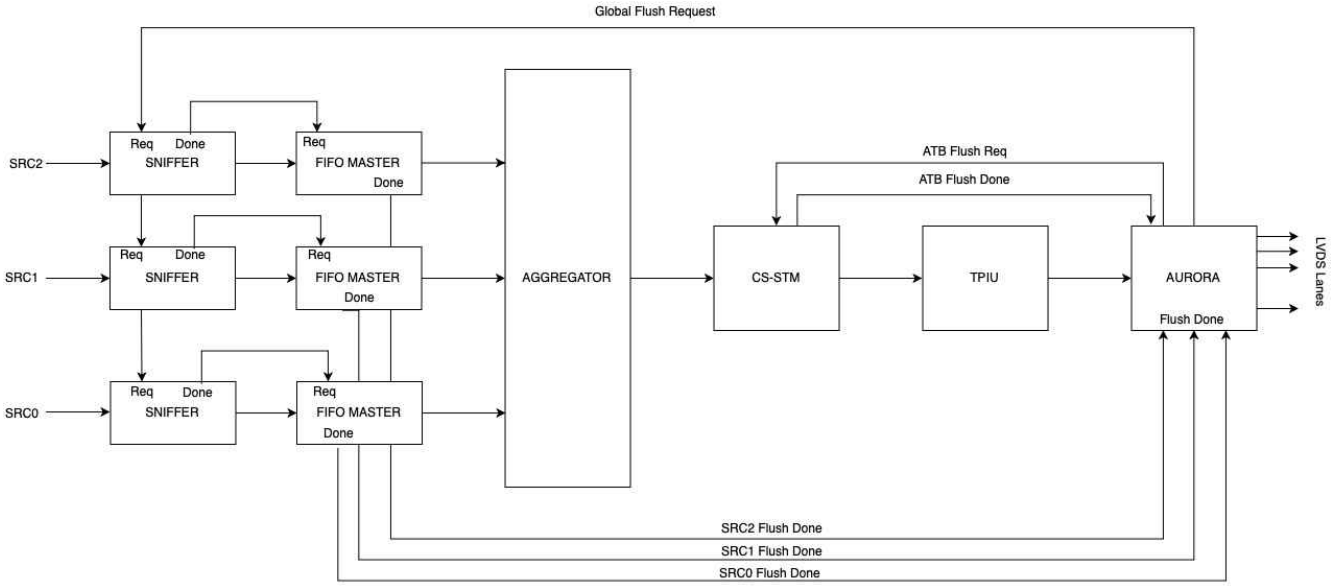

Figure 11-171. Global Flush Architecture

11.2.3.2.5.2 Sequence

Refer to Section 11.2.3.2.7 for more details on the software sequence.

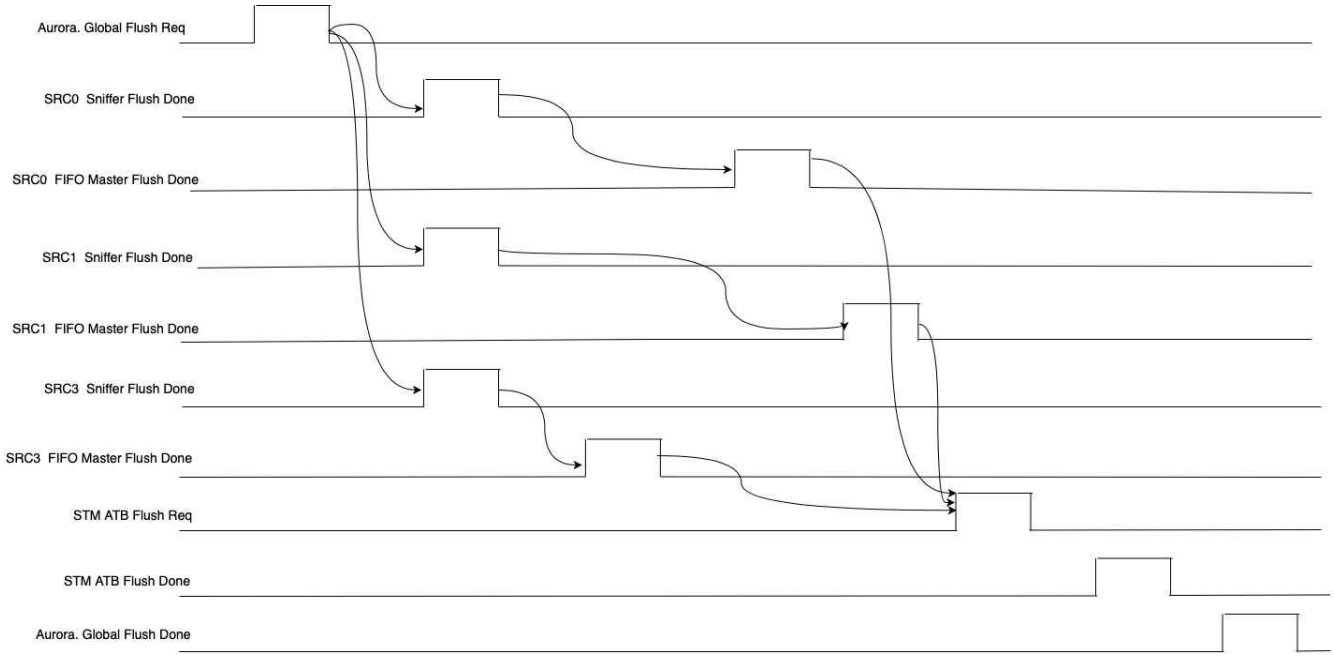

Figure 11-172. Global Flush Sequence

11.2.3.2.6 Interrupts

The IP generates two interrupt output lines. Each line has the following aggregated interrupts.

Copyright © 2025 Texas Instruments Incorporated

11.2.3.2.6.1 AURORA_TX_INTAGG

Table 11-1015 shows the bit aggregation to generate the interrupt. The register AURORA_TX_INTAGG_MASK is used to mask some of the aggregated events from generating an interrupt. On receiving an interrupt, the processor must read the AURORA_TX_INTAGG_STATUS register to analyze the event that caused the interrupt. Writing 0x1 to the corresponding bit set clears the interrupt. Only unmasked events generate an interrupt and their status latched in the AURORA_TX_INTAGG_STATUS register. AURORA_TX_INTAGG_STATUS_RAW latches any event assertion irrespective of the mask register.

Table 11-1015. AURORA_TX_INTAGG Bit Aggregation

Interrupt Number	Interrupt	Description
0	AURORA_TX_INIT_DONE	Indicates completion of Aurora Initialization sequence
1	AURORA_TX_FLUSH_DONE	Indicates that the Aurora IP has completed flush operation on its Data FIFO
2	AURORA_TX_EXT_FLUSH_DONE	Indicates that the MDO infrastructure has completed flushing its components
3	AURORA_TX_UFC_SENT	Indicates that a UFC packet has been generated as sent
4	AURORA_TX_CC_DONE	Indicate completion of Clock compensation sequence transmission
5	DATA_STOP_DONE	
6	AURORA_TX_EOP_DONE	Indicates completion of UDP packets
7	AURORA_TX_HEADER_DONE	Indicates completion of Frame Header transmission

11.2.3.2.6.2 AURORA_TX_ERRAGG

Table 11-1016 shows the bit aggregation to generate the interrupt. The register AURORA_TX_ERRAGG_MASK is used to mask some of the aggregated events from generating an interrupt. On receiving an interrupt, the processor must read the AURORA_TX_ERRAGG_STATUS register to analyze the event that caused the interrupt. Writing 0x1 to the corresponding bit set clears the interrupt. Only unmasked events generate an interrupt and their status latched in the AURORA_TX_ERRAGG_STATUS register. AURORA_TX_ERRAGG_STATUS_RAW latches any event assertion irrespective of the mask register.

Table 11-1016. AURORA_TX_ERRAGG Bit Aggregation

Interrupt Number	Interrupt	Description
0	AURORA_TX_UFC_ERR	Indicates that another UFC generation request was received with the IP was in the progress of transmitting the previous request

11.2.3.2.7 Programming Sequence

11.2.3.2.7.1 Programming Sequence for Typical Data Flow

1. Enable lvds PADS from TOP_RCM:
   - LVDS_PAD_CTRL0.LVDS_PAD_CTRL0 = 0
   - LVDS_PAD_CTRL1.LVDS_PAD_CTRL1 = 0
2. Program Aurora config registers:
   - AURORA_TX_CONFIG.AURORA_TX_CONFIG_ENABLE = 1
   - AURORA_TX_CONFIG.AURORA_TX_CONFIG_NUM_LANES = 1 (2 lanes active)
   - AURORA_TX_CONFIG.AURORA_TX_CONFIG_PROTOCOL_SEL = 1 (For Aurora 64b/66b)
   - AURORA_TX_UDP_CONFIG.AURORA_TX_UDP_CONFIG_PACK_MODE_SEL = 1 (TWP packets)
   - AURORA_TX_UDP_CONFIG.AURORA_TX_UDP_CONFIG_CRC_EN = 1
   - AURORA_TX_UDP_CONFIG.AURORA_TX_UDP_CONFIG_TWP_SYNC_COMPRESSION_EN = 1
   - AURORA_TX_UDP_CONFIG.AURORA_TX_UDP_CONFIG_TEST_PATTERN_EN = 0
   - AURORA_TX_UDP_CONFIG.AURORA_TX_UDP_CONFIG_BYPASS_EN = 0
   - Configuring for an 8-byte Frame Header: AURORA_TX_UDP_CONFIG.AURORA_TX_UDP_CONFIG_FRAME_HEADER_EN = 2 (Optional)
   - If FRAME_HEADER_EN > 0: AURORA_TX_UDP_FRAME_HEADER0 = 0x900
   - If FRAME_HEADER_EN > 1: AURORA_TX_UDP_FRAME_HEADER1 = 0xA00

Copyright © 2025 Texas Instruments Incorporated

- AURORA_TX_UDP_CONFIG.AURORA_TX_UDP_CONFIG_TWP_IDLE_FILTER_EN = 1
- Mapping Logical Lane 0 and 1 to physical lanes 0 and 1, respectively: AURORA_TX_LANE_MAP= 0x98
- AURORA_TX_TWP_SYNC_CNT.AURORA_TX_TWP_SYNC_CNT_SYNC_CNT = 2
- AURORA_TX_UDP_SIZE.AURORA_TX_UDP_SIZE = 0x18
- AURORA_TX_CC_CNT.AURORA_TX_CC_CNT_SYNC_COUNT = 0x199C

3. For Aurora 64b66b only:
   - AURORA_TX_CB_CNT.AURORA_TX_CB_CNT_CB_COUNT = 0x199C
4. Lane initialization sequence count:
   - AURORA_TX_INIT_CNT_LRC.AURORA_TX_INIT_CNT_LRC = 0x3E8
   - AURORA_TX_INIT_CNT_ALIGN.AURORA_TX_INIT_CNT_ALIGN_ALIGN_LEN = 0x10
   - AURORA_TX_INIT_CNT_ALIGN.AURORA_TX_INIT_CNT_ALIGN_ALIGN_MUL = 0x7
5. Channel bonding sequence count:
   - AURORA_TX_INIT_CNT_BONDING.AURORA_TX_INIT_CNT_BONDING_BOND_LEN = 0x11
   - AURORA_TX_INIT_CNT_BONDING.AURORA_TX_INIT_CNT_BONDING_BOND_MUL = 0x5
   - AURORA_TX_INIT_CNT_BONDING.AURORA_TX_INIT_CNT_BONDING_NO_OF_IDLES = 0x4
6. For Aurora 8b10b only: Channel verification sequence count:
   - AURORA_TX_INIT_CNT_VERIFY.AURORA_TX_INIT_CNT_VERIFY_VERIFY_LEN = 0x6
   - AURORA_TX_INIT_CNT_VERIFY.AURORA_TX_INIT_CNT_VERIFY_VERIFY_MUL = 0x4
7. Assert init req:
   - AURORA_TX_INITIALIZE_REQ.AURORA_TX_INITIALIZE_REQ_TX_INIT = 1
8. Poll for init to get over:
   - AURORA_TX_INIT_STATUS.AURORA_TX_INIT_STATUS_TX_CH_RDY (to 1).
9. For a test pattern, follow this step. Else, skip to Step 11. At this stage, the test pattern can also be enabled so that Aurora starts sending test data generated internally within the Aurora module. This part is optional, and the user can skip this step to directly jump to next step:
   - AURORA_TX_TESTPATTERN_START_REQ = 1
   - Wait as long as needed to receive test pattern
   - AURORA_TX_TESTPATTERN_STOP_REQ = 1
10. Clock source selection
    - TOP_AURORA_TX.AURORA_TX_RESET_REQ.AURORA_TX_RESET_REQ_TX_RESET = 1
11. For MDO Data, follow these steps. Programming MDO registers; example scenario: Sniffer 2 , STM channel 3, threshold of 1024 bytes, write mode=0
    - SRC2_BW_CTRL Register (Offset = B0h) [Reset = X]
    - SRC2_CTRL Register (Offset = 84h) [Reset = X]
    - SRC2_THRESHOLD Register (Offset = ACh) [Reset = X]
    - SRC2_RANGE_START0 Register (Offset = 88h) [Reset = 00000000h]
    - SRC2_RANGE_END0 Register (Offset = 8Ch) [Reset = 00000000h]
    - SRC2_CHANNEL Register (Offset = B4h) [Reset = 00000000h] = 0x300 (For STM channel=3, set bits[31:8]=3)
    - Ensure guaranteed access: SRC2_CHANNEL Register (Offset = B4h) [Reset = 00000000h]
    - Enable the sniffer: TOP_MDO_INFRA.SRC2_CTRL_UN.SRC2_CTRL_ENABLE = 0x1
12. Programming STM regs; scenario: sniffer 2 , STM schannel 3, threshold of 1024 bytes, write mode=0 (SRC2_BW_CTRL Register (Offset = B0h) [Reset = X])
    - TOP_DEBUGSS.STMTCSR = 0x0 (Initializing to 0)
    - TOP_DEBUGSS.STMTCSR.EN = 0x1 (Global STM enable)
    - TOP_DEBUGSS.STMTCSR.TRACEID = 0x1 (Set trace ID to a nonzero value)
    - TOP_DEBUGSS.STMSPER.STMSPER = 0x8 (Enabling stimulus port:STM channel 3 - bit[3])
13. Assert data start:
    - AURORA_TX_DATA_START_REQ. DATA_START = 1
14. Trigger the transfer on the subsystem which the user wants to sniff.

11.2.3.2.7.2 To Stop Data Transmission with Flush of Data

1. Disable the sniffer when the user must stop sniffing:

Copyright © 2025 Texas Instruments Incorporated

- SRC2_BW_CTRL Register (Offset = B0h) [Reset = X]

2. Flush MDO-Aurora modules:
   - AURORA_TX_UDP_CONFIG.AURORA_TX_UDP_CONFIG_PACK_MODE_SEL = 0x3
   - AURORA_TX_FLUSH_REQ.AURORA_TX_FLUSH_REQ_TRIGGER = 1
3. Poll for flush done:
   - AURORA_TX_INTAGG_STATUS_RAW.AURORA_TX_INTAGG_STATUS_RAW_INT1

11.2.3.2.7.3 To Stop Data Transmission Without Flush of Data

1. Stop Data:
   - AURORA_TX_UDP_CONFIG.AURORA_TX_UDP_CONFIG_PACK_MODE_SEL = 0x3
   - AURORA_TX_DATA_STOP_REQ.AURORA_TX_DATA_STOP_REQ_DATA_STOP = 1
2. Poll for Data Stop:
   - AURORA_TX_INTAGG_STATUS_RAW.AURORA_TX_INTAGG_STATUS_RAW_INT5

11.2.3.2.7.4 Aurora Programming Care-abouts

- Test patterns support a minimum transfer size of 16 bytes.
- Header-only transmission is not supported.
- Synch compression supports minimum 2 sync packets; less than this cannot be programmed in the AURORA_TX_TWP_SYNC_CNT register.
- For the header to be sent out before updating for next header, ensure the header done interrupt has occurred.

LVDS Aurora Muxing

Below table specifies all muxing modes for different functionality:

Register Details: TOP_CTRL:: MDO_CTRL_SRC:: MDO_CTRL_SRC_SELECT

4-Lane LVDS Packaging:

PAD NAME	Legacy Mode (Select = 2'b01)	Aurora Full data (Select = 2'b00)	Aurora bypass (Select = 2'b10)	Aurora (LOP) (Select = 2'b11)
LVDS_TXM1 LVDS_TXP1	Bit clock from cbuff	Data[2] from aurora	Bit clk from aurora	This mode is specific for 3-Lane LVDS packaging
LVDS_TXM2 LVDS_TXP2	Frame clk from cbuff	Data[3] from aurora	Frame clk from aurora	
LVDS_TXM0 LVDS_TXM0	Data[0] from cbuff	Data[0] from aurora	Data[0] from aurora	
LVDS_TXM3 LVDS_TXP3	Data[1] from cbuff	Data[1] from aurora	Data[1] from aurora	

3-Lane LVDS Packaging:

PAD NAME	Legacy Mode (Select = 2'b01)	Aurora Full data (Select = 2'b00)	Aurora bypass (Select = 2'b10)	Aurora (LOP) (Select = 2'b11)
LVDS_TXM1 LVDS_TXP1	Bit clock from cbuff	Data[2] from aurora	Bit clk from aurora	Bit clk from aurora
LVDS_TXM2 LVDS_TXP2	Frame clk from cbuff	Data[3] from aurora	Frame clk from aurora	Data[3] from aurora
LVDS_TXM0	Data[0] from cbuff	Data[0] from aurora	Data[0] from aurora	Data[0] from aurora

Copyright © 2025 Texas Instruments Incorporated

LVDS_TXM3 **LVDS_TXP3**	**Not used**	**Not used**	**Not used**	**Not used**

2-Lane LVDS Packaging

PAD NAME	Legacy Mode (Select = 2'b01)	Aurora Full data (Select = 2'b00)	Aurora bypass (Select = 2'b10)	Aurora (LOP) (Select = 2'b11)
LVDS_TXM1 **LVDS_TXP1**	This mode cannot be supported in 2-Lane LVDS	Data[2] from aurora	Bit clk from aurora	Bit clk from aurora
LVDS_TXM2 **LVDS_TXP2**		**Not used**	**Not used**	**Not used**
LVDS_TXM0		Data[0] from aurora	Data[0] from aurora	Data[0] from aurora
LVDS_TXM3 **LVDS_TXP3**		**Not used**	**Not used**	**Not used**

11.2.3.3 TOP_AURORA_TX Registers

This section provides information on the TOP_AURORA_TX Module Instance within this product. Each of the registers within the Module Instance is described separately below.

11.2.3.3.1 TOP_AURORA_TX Registers Mapping Summary

Table 11-1017. TOP_AURORA_TX Register Summary

Register Name	Type	Register Width (Bits)	Register Reset	Address Offset	Physical Address
PID	RO	32	0x6180 0213	0x0000 0000	0x0306 0000
AURORA_TX_CONFIG	RW	32	0bxxxx xxxx xxxx x000 xxxx xxxx xxxx x100	0x0000 0014	0x0306 0014
AURORA_TX_LANE_MAP	RW	32	0x0000 0000	0x0000 0018	0x0306 0018
AURORA_TX_UDP_CONFIG	RW	32	0bxxxx xxxx xxx0 0000 xxxx xxx0 0000 xx00	0x0000 001C	0x0306 001C
AURORA_TX_UDP_SIZE	RW	32	0x0000 0000	0x0000 0020	0x0306 0020
AURORA_TX_UDP_FRAME_HEADER0	RW	32	0x0000 0000	0x0000 0024	0x0306 0024
AURORA_TX_UDP_FRAME_HEADER1	RW	32	0x0000 0000	0x0000 0028	0x0306 0028
AURORA_TX_UDP_FRAME_HEADER2	RW	32	0x0000 0000	0x0000 002C	0x0306 002C
AURORA_TX_UDP_FRAME_HEADER3	RW	32	0x0000 0000	0x0000 0030	0x0306 0030
AURORA_TX_UDP_FRAME_HEADER4	RW	32	0x0000 0000	0x0000 0034	0x0306 0034
AURORA_TX_UDP_FRAME_HEADER5	RW	32	0x0000 0000	0x0000 0038	0x0306 0038
AURORA_TX_UDP_FRAME_HEADER6	RW	32	0x0000 0000	0x0000 003C	0x0306 003C
AURORA_TX_UDP_FRAME_HEADER7	RW	32	0x0000 0000	0x0000 0040	0x0306 0040
AURORA_TX_UDP_FRAME_HEADER8	RW	32	0x0000 0000	0x0000 0044	0x0306 0044
AURORA_TX_UDP_FRAME_HEADER9	RW	32	0x0000 0000	0x0000 0048	0x0306 0048

Copyright © 2025 Texas Instruments Incorporated

Table 11-1017. TOP_AURORA_TX Register Summary (continued)

Register Name	Type	Register Width (Bits)	Register Reset	Address Offset	Physical Address
AURORA_TX_UDP_FRAME_HEADER10	RW	32	0x0000 0000	0x0000 004C	0x0306 004C
AURORA_TX_UDP_FRAME_HEADER11	RW	32	0x0000 0000	0x0000 0050	0x0306 0050
AURORA_TX_UDP_FRAME_HEADER12	RW	32	0x0000 0000	0x0000 0054	0x0306 0054
AURORA_TX_UDP_FRAME_HEADER13	RW	32	0x0000 0000	0x0000 0058	0x0306 0058
AURORA_TX_UDP_FRAME_HEADER14	RW	32	0x0000 0000	0x0000 005C	0x0306 005C
AURORA_TX_UDP_FRAME_HEADER15	RW	32	0x0000 0000	0x0000 0060	0x0306 0060
AURORA_TX_UFC_MSG_CTRL	RW	32	0bxxxx xxxx xxxx xxxx xxxx xxxx xxxx xxx0	0x0000 0064	0x0306 0064
AURORA_TX_UFC_MESSAGE0	RW	32	0x0000 0000	0x0000 0068	0x0306 0068
AURORA_TX_UFC_MESSAGE1	RW	32	0x0000 0000	0x0000 006C	0x0306 006C
AURORA_TX_TWP_SYNC_CNT	RW	32	0bxxxx xxxx xxxx xxxx xxxx xx00 0000 0001	0x0000 0070	0x0306 0070
AURORA_TX_INITIALIZE_REQ	RW	32	0bxxxx xxxx xxxx xxxx xxxx xxxx xxxx xx0x	0x0000 0080	0x0306 0080
AURORA_TX_UFC_MSG_REQ	RW	32	0bxxxx xxxx xxxx xxxx xxxx xxxx xxxx xxx0	0x0000 0084	0x0306 0084
AURORA_TX_FLUSH_REQ	RW	32	0bxxxx xxxx xxxx xxxx xxxx xxxx xxxx xxx0	0x0000 0088	0x0306 0088
AURORA_TX_EOP_REQ	RW	32	0bxxxx xxxx xxxx xxxx xxxx xxxx xxxx xxx0	0x0000 008C	0x0306 008C
AURORA_TX_DATA_START_REQ	RW	32	0bxxxx xxxx xxxx xxxx xxxx xxxx xxxx xx0x	0x0000 0090	0x0306 0090
AURORA_TX_DATA_STOP_REQ	RW	32	0bxxxx xxxx xxxx xxxx xxxx xxxx xxxx xx0x	0x0000 0094	0x0306 0094
AURORA_TX_TESTPATTERN_START_REQ	RW	32	0bxxxx xxxx xxxx xxxx xxxx xxxx xxxx xx0x	0x0000 0098	0x0306 0098
AURORA_TX_TESTPATTERN_STOP_REQ	RW	32	0bxxxx xxxx xxxx xxxx xxxx xxxx xxxx xx0x	0x0000 009C	0x0306 009C
AURORA_TX_OVERRIDE	RW	32	0bxxxx xxxx x000 0000 0000 0000 0000 xxx0	0x0000 0100	0x0306 0100
AURORA_TX_8B10B_OVERRIDE0	RW	32	0x0000 0000	0x0000 0104	0x0306 0104
AURORA_TX_8B10B_OVERRIDE1	RW	32	0x0000 0000	0x0000 0108	0x0306 0108
AURORA_TX_8B10B_OVERRIDE2	RW	32	0x0000 0000	0x0000 010C	0x0306 010C
AURORA_TX_8B10B_OVERRIDE3	RW	32	0xXXXX 0000	0x0000 0110	0x0306 0110
AURORA_TX_64B66B_OVERRIDE1	RW	32	0x0078 0078	0x0000 0114	0x0306 0114
AURORA_TX_64B66B_OVERRIDE2	RW	32	0xXX80 782D	0x0000 0118	0x0306 0118
AURORA_TX_64B66B_OVERRIDE3	RW	32	0xXXXX E11E	0x0000 011C	0x0306 011C
AURORA_TX_INIT_CNT_LRC	RW	32	0x0000 0000	0x0000 0124	0x0306 0124

Copyright © 2025 Texas Instruments Incorporated

Table 11-1017. TOP_AURORA_TX Register Summary (continued)

Register Name	Type	Register Width (Bits)	Register Reset	Address Offset	Physical Address
AURORA_TX_INIT_CNT_ALIGN	RW	32	0bxxxx xxxx xxxx 0000 xxx0 0000 0000 0000	0x0000 0128	0x0306 0128
AURORA_TX_INIT_CNT_BONDING	RW	32	0bxxxx 0000 0100 0000 xxxx xxx0 0000 0000	0x0000 012C	0x0306 012C
AURORA_TX_INIT_CNT_VERIFY	RW	32	0bxxxx xxxx xxxx 0000 xxxx xxx0 0000 0000	0x0000 0130	0x0306 0130
AURORA_TX_INIT_CTRL	RW	32	0bxxxx xxxx xxxx xxxx xxxx xxxx xxxx x000	0x0000 0134	0x0306 0134
AURORA_TX_IDLE_CTRL	RW	32	0bxxxx xxxx xxxx xxxx xxxx xxxx xx00 00xx	0x0000 0138	0x0306 0138
AURORA_TX_IDLE_REQ	RW	32	0bxxxx xxxx xxxx xxxx xxxx xxxx xxxx xxx0	0x0000 013C	0x0306 013C
AURORA_TX_CC_REQ	RW	32	0bxxxx xxxx xxxx xxxx xxxx xxxx xxxx xx0x	0x0000 0140	0x0306 0140
AURORA_TX_CC_CNT	RW	32	0xXXXX 26FC	0x0000 0144	0x0306 0144
AURORA_TX_CB_STATUS	RW	32	0bxxxx xxxx xxxx xxxx xxxx xxxx xxxx xxx0	0x0000 0148	0x0306 0148
AURORA_TX_CB_REQ	RW	32	0bxxxx xxxx xxxx xxxx xxxx xxxx xxxx xx0x	0x0000 014C	0x0306 014C
AURORA_TX_CB_CNT	RW	32	0xXXXX 4E20	0x0000 0150	0x0306 0150
AURORA_TX_RESET_REQ	RW	32	0bxxxx xxxx xxxx xxxx xxxx xxxx xxxx xxx0	0x0000 0154	0x0306 0154
AURORA_TX_SERIALIZER_OVERRIDE0	RW	32	0x5E44 4400	0x0000 0158	0x0306 0158
AURORA_TX_SERIALIZER_OVERRIDE1	RW	32	0x0030 0000	0x0000 015C	0x0306 015C
AURORA_TX_DATA_BYTE_REVERSE	RW	32	0bxxxx xxxx xxxx xxxx xxxx xxxx xxxx xx00	0x0000 0160	0x0306 0160
AURORA_TX_64B66B_SCRAMBLER_INIT0	RW	32	0xFFFF FFFF	0x0000 0164	0x0306 0164
AURORA_TX_64B66B_SCRAMBLER_INIT1	RW	32	0b0xxx xx11 1111 1111 1111 1111 1111 1111	0x0000 0168	0x0306 0168
AURORA_TX_TESTPATTERN_CTRL	RW	32	0bxxxx xxxx xxxx xxxx xxxx xxxx xxxx xxx0	0x0000 016C	0x0306 016C
AURORA_TX_CC_SEQ_CNT	RW	32	0xXXX2 XXXB	0x0000 0170	0x0306 0170
AURORA_TX_EOP_DELAY	RW	32	0bxxxx xxxx xxxx xxx0 0000 0000 0000 0000	0x0000 0174	0x0306 0174
AURORA_TX_FLUSH_DELAY	RW	32	0xXXXX XX10	0x0000 0178	0x0306 0178
AURORA_TX_STATUS	RO	32	0x0000 XXX0	0x0000 0200	0x0306 0200
AURORA_TX_INIT_STATUS	RO	32	0bxxxx xxxx xxxx xxxx xxxx xxxx xxx0 0000	0x0000 0204	0x0306 0204
AURORA_TX_CC_STATUS	RW	32	0bxxxx xxxx xxxx xxxx xxxx xxxx xxxx xxx0	0x0000 0208	0x0306 0208
AURORA_TX_IDLE_STATUS	RW	32	0bxxxx xxxx xxxx xxxx xxxx xxxx xxxx xxx0	0x0000 020C	0x0306 020C
AURORA_TX_INTAGG_MASK	RW	32	0xXXXX FFFF	0x0000 0210	0x0306 0210
AURORA_TX_INTAGG_STATUS	RW	32	0xXXXX 0000	0x0000 0214	0x0306 0214
AURORA_TX_INTAGG_STATUS_RAW	RW	32	0xXXXX 0004	0x0000 0218	0x0306 0218
AURORA_TX_ERRAGG_MASK	RW	32	0xXXXX FFFF	0x0000 021C	0x0306 021C

Copyright © 2025 Texas Instruments Incorporated

Table 11-1017. TOP_AURORA_TX Register Summary (continued)

Register Name	Type	Register Width (Bits)	Register Reset	Address Offset	Physical Address
AURORA_TX_ERRAGG_STATUS	RW	32	0xXXXX 0000	0x0000 0220	0x0306 0220
AURORA_TX_ERRAGG_STATUS_RAW	RW	32	0xXXXX 0000	0x0000 0224	0x0306 0224
AURORA_TX_SERIALIZER_STATUS0	RO	32	0x0000 AAAA	0x0000 0228	0x0306 0228
AURORA_TX_SERIALIZER_STATUS1	RO	32	0x0001 4444	0x0000 022C	0x0306 022C
AURORA_TX_TPIU_DATA_PACKED	RO	32	0x0000 0000	0x0000 0230	0x0306 0230
HW_SPARE_RW0	RW	32	0x0000 0000	0x0000 0FD0	0x0306 0FD0
HW_SPARE_RW1	RW	32	0x0000 0000	0x0000 0FD4	0x0306 0FD4
HW_SPARE_RW2	RW	32	0x0000 0000	0x0000 0FD8	0x0306 0FD8
HW_SPARE_RW3	RW	32	0x0000 0000	0x0000 0FDC	0x0306 0FDC
HW_SPARE_RO0	RO	32	0x0000 0000	0x0000 0FE0	0x0306 0FE0
HW_SPARE_RO1	RO	32	0x0000 0000	0x0000 0FE4	0x0306 0FE4
HW_SPARE_RO2	RO	32	0x0000 0000	0x0000 0FE8	0x0306 0FE8
HW_SPARE_RO3	RO	32	0x0000 0000	0x0000 0FEC	0x0306 0FEC
HW_SPARE_WPH	RW	32	0x0000 0000	0x0000 0FF0	0x0306 0FF0
HW_SPARE_REC	RW	32	0x0000 0000	0x0000 0FF4	0x0306 0FF4
LOCK0_KICK0	RW	32	0x0000 0000	0x0000 1008	0x0306 1008
LOCK0_KICK1	RW	32	0x0000 0000	0x0000 100C	0x0306 100C
INTR_RAW_STATUS	RW	32	0xXXXX XXX0	0x0000 1010	0x0306 1010
INTR_ENABLED_STATUS_CLEAR	RW	32	0xXXXX XXX0	0x0000 1014	0x0306 1014
INTR_ENABLE	RW	32	0xXXXX XXX0	0x0000 1018	0x0306 1018
INTR_ENABLE_CLEAR	RW	32	0xXXXX XXX0	0x0000 101C	0x0306 101C
EOI	RW	32	0xXXXX XX00	0x0000 1020	0x0306 1020
FAULT_ADDRESS	RO	32	0x0000 0000	0x0000 1024	0x0306 1024
FAULT_TYPE_STATUS	RO	32	0bxxxx xxxx xxxx xxxx xxxx xxxx x000 0000	0x0000 1028	0x0306 1028
FAULT_ATTR_STATUS	RO	32	0x0000 0000	0x0000 102C	0x0306 102C
FAULT_CLEAR	WO	32	0bxxxx xxxx xxxx xxxx xxxx xxxx xxxx xxx0	0x0000 1030	0x0306 1030

11.2.3.3.2 TOP_AURORA_TX Register Descriptions

11.2.3.3.2.1 TOP_AURORA_TX:PID

Address offset: 0x0000 0000

Physical address: 0x0306 0000

Instance: TOP_AURORA_TX

Description: PID register

Type: RO

Table 11-1018. TOP_AURORA_TX:PID

Bits	Field Name	Type	Reset	Description
31:16:00	PID_MSB16	RO	0x6180	

Copyright © 2025 Texas Instruments Incorporated

Table 11-1018. TOP_AURORA_TX:PID (continued)

Bits	Field Name	Type	Reset	Description
15:11	PID_MISC	RO	0x00	
10:08	PID_MAJOR	RO	0x2	
7:06	PID_CUSTOM	RO	0x0	
5:00	PID_MINOR	RO	0x13	

11.2.3.3.2.2 TOP_AURORA_TX:AURORA_TX_CONFIG

Address offset: 0x0000 0014

Physical address: 0x0306 0014

Instance: TOP_AURORA_TX

Type: RW

Table 11-1019. TOP_AURORA_TX:AURORA_TX_CONFIG

Bits	Field Name	Type	Reset	Description
18:16	AURORA_TX_CONFIG_NUM_LANES	RW	0x0	Selects the number of lanes for transmission 0 : 1 Lane 1 : 2 Lanes 2 : 3 Lanes 3 : 4 Lanes
2	AURORA_TX_CONFIG_STRICT_ALIGN	RW	1	Reserved for HW RnD. Do not modify
1	AURORA_TX_CONFIG_PROTOCOL_SEL	RW	0	Selects if the IP is in 8b/10b OR 64b/66b mode. 0 : 8b/10b 1 : 64b/66b
0	AURORA_TX_CONFIG_ENABLE	RW	0	Select to Enable or Disable IP. 0 : Disable 1 : Enable

11.2.3.3.2.3 TOP_AURORA_TX:AURORA_TX_LANE_MAP

Address offset: 0x0000 0018

Physical address: 0x0306 0018

Instance: TOP_AURORA_TX

Type: RO

Table 11-1020. TOP_AURORA_TX:AURORA_TX_LANE_MAP

Bits	Field Name	Type	Reset	Description
31:28:00	AURORA_TX_LANE_MAP_LANE7_MAP	RW	0x0	Reserved for HW RnD. Do not modify
27:24:00	AURORA_TX_LANE_MAP_LANE6_MAP	RW	0x0	Reserved for HW RnD. Do not modify
23:20	AURORA_TX_LANE_MAP_LANE5_MAP	RW	0x0	Reserved for HW RnD. Do not modify
19:16	AURORA_TX_LANE_MAP_LANE4_MAP	RW	0x0	Reserved for HW RnD. Do not modify

Copyright © 2025 Texas Instruments Incorporated

Table 11-1020. TOP_AURORA_TX:AURORA_TX_LANE_MAP (continued)

Bits	Field Name	Type	Reset	Description
15:12	AURORA_TX_LANE_MAP_LANE3_MAP	RW	0x0	Bits [2:0] bits determine the logical lane that is transported over the physical lane 3. 000 : Logical lane 0 is transported over physical lane 3 001 : Logical lane 1 is transported over physical lane 3. ... 111 : Logical lane 7 is transported over physical lane 3. Bit 3 determines if the entry is valid
11:08	AURORA_TX_LANE_MAP_LANE2_MAP	RW	0x0	Bits [2:0] determine the logical lane that is transported over the physical lane 2. 000 : Logical lane 0 is transported over physical lane 2 001 : Logical lane 1 is transported over physical lane 2. ... 111 : Logical lane 7 is transported over physical lane 2. Bit 3 determines if the entry is valid
7:04	AURORA_TX_LANE_MAP_LANE1_MAP	RW	0x0	Bits [2:0] determine the logical lane that is transported over the physical lane 1. 000 : Logical lane 0 is transported over physical lane 1 001 : Logical lane 1 is transported over physical lane 1. ... 111 : Logical lane 7 is transported over physical lane 1. Bit 3 determines if the entry is valid
3:00	AURORA_TX_LANE_MAP_LANE0_MAP	RW	0x0	Bits [2:0] determine the logical lane that is transported over the physical lane 0. 000 : Logical lane 0 is transported over physical lane 0 001 : Logical lane 1 is transported over physical lane 0. ... 111 : Logical lane 7 is transported over physical lane 0. Bit 3 determines if the entry is valid

11.2.3.3.2.4 TOP_AURORA_TX:AURORA_TX_UDP_CONFIG

Address offset: 0x0000 001C

Physical address: 0x0306 001C

Instance: TOP_AURORA_TX

Type: RW

Table 11-1021. TOP_AURORA_TX:AURORA_TX_UDP_CONFIG

Bits	Field Name	Type	Reset	Description
20:16	AURORA_TX_UDP_CONFIG_FRAME_HEADER_EN	RW	0x00	Header Enable configuration 0x0 : Disable Header transmission 0x1 - 0x10 : Number of 32 bit Header to be transmitted
8	AURORA_TX_UDP_CONFIG_BYPASS_EN	RW	0	Writing a value of 1'b1 : Bypass the aurora protocol. - No aurora framing is done 1'b0 : Normal Mode - Framing is done as per aurora protocol
7	AURORA_TX_UDP_CONFIG_TEST_PATTERN_EN	RW	0	Writing a value of 1'b1: Enable the test pattern generation when the aurora transmitter is in IDLE state.

Copyright © 2025 Texas Instruments Incorporated

Table 11-1021. TOP_AURORA_TX:AURORA_TX_UDP_CONFIG (continued)

Bits	Field Name	Type	Reset	Description
6	AURORA_TX_UDP_CONFIG_TWP_SYNC_COMPRESSION_EN	RW	0	Writing a value of 1'b1 : Enables the compression of incoming synchronisation packets. This allows only a configurable number of TWP synchronization packets define by AURORA_TX_TWP_SYNC_CNT::AURORA_TX_TWP_SYNC_CNT_SYNC_CNT to be send through aurora interface. 1'b0 : Disable the TWP padding packet filter.
5	AURORA_TX_UDP_CONFIG_CRC_EN	RW	0	Writing a value of 1'b1 : Enable the UDP CRC calculation 1'b0 : Disable UDP CRC calculation
4	AURORA_TX_UDP_CONFIG_TWP_IDLE_FILTER_EN	RW	0	Writing a value of 1'b1 : Filters out the incoming TWP Padding Packet from being send via aurora interface. 1'b0 : Disable the TWP padding packet filter.
1:00	AURORA_TX_UDP_CONFIG_PACK_MODE_SEL	RW	0x0	Configure to select AURORATX_UDP_SIZE format 0: Number of TWP Packets 1 : Number of Bytes 3: SW only

11.2.3.3.2.5 TOP_AURORA_TX:AURORA_TX_UDP_SIZE

Address offset: 0x0000 0020

Physical address: 0x0306 0020

Instance: TOP_AURORA_TX

Type: RW

Table 11-1022. TOP_AURORA_TX:AURORA_TX_UDP_SIZE

Bits	Field Name	Type	Reset	Description
31:00:00	AURORA_TX_UDP_SIZE_SIZE	RW	0x0000 0000	Configure the number of TWP packets or data bytes to be sent as one packet based on AURORATX_CTRL::PACK_MODE. If PACK_MODE=1 Value configure should be multiple of 4 Bytes.

11.2.3.3.2.6 TOP_AURORA_TX:AURORA_TX_UDP_FRAME_HEADER0

Address offset: 0x0000 0024

Physical address: 0x0306 0024

Instance: TOP_AURORA_TX

Type: RW

Table 11-1023. TOP_AURORA_TX:AURORA_TX_UDP_FRAME_HEADER0

Bits	Field Name	Type	Reset	Description
31:00:00	AURORA_TX_UDP_FRAME_HEADER0_DATA	RW	0x0000 0000	32 bit DATA Sent out as Frame Header

11.2.3.3.2.7 TOP_AURORA_TX:AURORA_TX_UDP_FRAME_HEADER1

Address offset: 0x0000 0028

Copyright © 2025 Texas Instruments Incorporated

Physical address: 0x0306 0028

Instance: TOP_AURORA_TX

Type: RW

Table 11-1024. TOP_AURORA_TX:AURORA_TX_UDP_FRAME_HEADER1

Bits	Field Name	Type	Reset	Description
31:00:00	AURORA_TX_UDP_FRAME_HEADER1_DATA	RW	0x0000 0000	32 bit DATA Sent out as Frame Header

11.2.3.3.2.8 TOP_AURORA_TX:AURORA_TX_UDP_FRAME_HEADER2

Address offset: 0x0000 002C

Physical address: 0x0306 002C

Instance: TOP_AURORA_TX

Type: RW

Table 11-1025. TOP_AURORA_TX:AURORA_TX_UDP_FRAME_HEADER2

Bits	Field Name	Type	Reset	Description
31:00:00	AURORA_TX_UDP_FRAME_HEADER2_DATA	RW	0x0000 0000	32 bit DATA Sent out as Frame Header

11.2.3.3.2.9 TOP_AURORA_TX:AURORA_TX_UDP_FRAME_HEADER3

Address offset: 0x0000 0030

Physical address: 0x0306 0030

Instance: TOP_AURORA_TX

Type: RW

Table 11-1026. TOP_AURORA_TX:AURORA_TX_UDP_FRAME_HEADER3

Bits	Field Name	Type	Reset	Description
31:00:00	AURORA_TX_UDP_FRAME_HEADER3_DATA	RW	0x0000 0000	32 bit DATA Sent out as Frame Header

11.2.3.3.2.10 TOP_AURORA_TX:AURORA_TX_UDP_FRAME_HEADER4

Address offset: 0x0000 0034

Physical address: 0x0306 0034

Instance: TOP_AURORA_TX

Type: RW

Table 11-1027. TOP_AURORA_TX:AURORA_TX_UDP_FRAME_HEADER4

Bits	Field Name	Type	Reset	Description
31:00:00	AURORA_TX_UDP_FRAME_HEADER4_DATA	RW	0x0000 0000	32 bit DATA Sent out as Frame Header

11.2.3.3.2.11 TOP_AURORA_TX:AURORA_TX_UDP_FRAME_HEADER5

Address offset: 0x0000 0038

Physical address: 0x0306 0038

Instance: TOP_AURORA_TX

Copyright © 2025 Texas Instruments Incorporated

Type: RW

Table 11-1028. TOP_AURORA_TX:AURORA_TX_UDP_FRAME_HEADER5

Bits	Field Name	Type	Reset	Description
31:00:00	AURORA_TX_UDP_FRAME_HEADER5_DATA	RW	0x0000 0000	32 bit DATA Sent out as Frame Header

11.2.3.3.2.12 TOP_AURORA_TX:AURORA_TX_UDP_FRAME_HEADER6

Address offset: 0x0000 003C

Physical address: 0x0306 003C

Instance: TOP_AURORA_TX

Type: RW

Table 11-1029. TOP_AURORA_TX:AURORA_TX_UDP_FRAME_HEADER6

Bits	Field Name	Type	Reset	Description
31:00:00	AURORA_TX_UDP_FRAME_HEADER6_DATA	RW	0x0000 0000	32 bit DATA Sent out as Frame Header

11.2.3.3.2.13 TOP_AURORA_TX:AURORA_TX_UDP_FRAME_HEADER7

Address offset: 0x0000 0040

Physical address: 0x0306 0040

Instance: TOP_AURORA_TX

Type: RW

Table 11-1030. TOP_AURORA_TX:AURORA_TX_UDP_FRAME_HEADER7

Bits	Field Name	Type	Reset	Description
31:00:00	AURORA_TX_UDP_FRAME_HEADER7_DATA	RW	0x0000 0000	32 bit DATA Sent out as Frame Header

11.2.3.3.2.14 TOP_AURORA_TX:AURORA_TX_UDP_FRAME_HEADER8

Address offset: 0x0000 0044

Physical address: 0x0306 0044

Instance: TOP_AURORA_TX

Type: RW

Table 11-1031. TOP_AURORA_TX:AURORA_TX_UDP_FRAME_HEADER8

Bits	Field Name	Type	Reset	Description
31:00:00	AURORA_TX_UDP_FRAME_HEADER8_DATA	RW	0x0000 0000	32 bit DATA Sent out as Frame Header

11.2.3.3.2.15 TOP_AURORA_TX:AURORA_TX_UDP_FRAME_HEADER9

Address offset: 0x0000 0048

Physical address: 0x0306 0048

Instance: TOP_AURORA_TX

Type: RW

Copyright © 2025 Texas Instruments Incorporated

Table 11-1032. TOP_AURORA_TX:AURORA_TX_UDP_FRAME_HEADER9

Bits	Field Name	Type	Reset	Description
31:00:00	AURORA_TX_UDP_FRAME_HEADER9_DATA	RW	0x0000 0000	32 bit DATA Sent out as Frame Header

11.2.3.3.2.16 TOP_AURORA_TX:AURORA_TX_UDP_FRAME_HEADER10

Address offset: 0x0000 004C

Physical address: 0x0306 004C

Instance: TOP_AURORA_TX

Type: RW

Table 11-1033. TOP_AURORA_TX:AURORA_TX_UDP_FRAME_HEADER10

Bits	Field Name	Type	Reset	Description
31:00:00	AURORA_TX_UDP_FRAME_HEADER10_DATA	RW	0x0000 0000	32 bit DATA Sent out as Frame Header

11.2.3.3.2.17 TOP_AURORA_TX:AURORA_TX_UDP_FRAME_HEADER11

Address offset: 0x0000 0050

Physical address: 0x0306 0050

Instance: TOP_AURORA_TX

Type: RW

Table 11-1034. TOP_AURORA_TX:AURORA_TX_UDP_FRAME_HEADER11

Bits	Field Name	Type	Reset	Description
31:00:00	AURORA_TX_UDP_FRAME_HEADER11_DATA	RW	0x0000 0000	32 bit DATA Sent out as Frame Header

11.2.3.3.2.18 TOP_AURORA_TX:AURORA_TX_UDP_FRAME_HEADER12

Address offset: 0x0000 0054

Physical address: 0x0306 0054

Instance: TOP_AURORA_TX

Type: RW

Table 11-1035. TOP_AURORA_TX:AURORA_TX_UDP_FRAME_HEADER12

Bits	Field Name	Type	Reset	Description
31:00:00	AURORA_TX_UDP_FRAME_HEADER12_DATA	RW	0x0000 0000	32 bit DATA Sent out as Frame Header

11.2.3.3.2.19 TOP_AURORA_TX:AURORA_TX_UDP_FRAME_HEADER13

Address offset: 0x0000 0058

Physical address: 0x0306 0058

Instance: TOP_AURORA_TX

Type: RW

Copyright © 2025 Texas Instruments Incorporated

Table 11-1036. TOP_AURORA_TX:AURORA_TX_UDP_FRAME_HEADER13

Bits	Field Name	Type	Reset	Description
31:00:00	AURORA_TX_UDP_FRAME_HEADER13_DATA	RW	0x0000 0000	32 bit DATA Sent out as Frame Header

11.2.3.3.2.20 TOP_AURORA_TX:AURORA_TX_UDP_FRAME_HEADER14

Address offset: 0x0000 005C

Physical address: 0x0306 005C

Instance: TOP_AURORA_TX

Type: RW

Table 11-1037. TOP_AURORA_TX:AURORA_TX_UDP_FRAME_HEADER14

Bits	Field Name	Type	Reset	Description
31:00:00	AURORA_TX_UDP_FRAME_HEADER14_DATA	RW	0x0000 0000	32 bit DATA Sent out as Frame Header

11.2.3.3.2.21 TOP_AURORA_TX:AURORA_TX_UDP_FRAME_HEADER15

Address offset: 0x0000 0060

Physical address: 0x0306 0060

Instance: TOP_AURORA_TX

Type: RW

Table 11-1038. TOP_AURORA_TX:AURORA_TX_UDP_FRAME_HEADER15

Bits	Field Name	Type	Reset	Description
31:00:00	AURORA_TX_UDP_FRAME_HEADER15_DATA	RW	0x0000 0000	32 bit DATA Sent out as Frame Header

11.2.3.3.2.22 TOP_AURORA_TX:AURORA_TX_UFC_MSG_CTRL

Address offset: 0x0000 0064

Physical address: 0x0306 0064

Instance: TOP_AURORA_TX

Type: RW

Table 11-1039. TOP_AURORA_TX:AURORA_TX_UFC_MSG_CTRL

Bits	Field Name	Type	Reset	Description
0	AURORA_TX_UFC_MSG_CTRL_UFC_MSG_SENT_STS	RW	0	This bit indicates that the message send triggered by the SEND_MSG bit has been completed. Read 1 : Either a hardware or software UFC event occurred. Read 0 : No UFC event occurred. Write 0 : No effect. Write 1 : Clears this bit. This bit is reset when the SEND_MSG bit is set.

11.2.3.3.2.23 TOP_AURORA_TX:AURORA_TX_UFC_MESSAGE0

Address offset: 0x0000 0068

Physical address: 0x0306 0068

Copyright © 2025 Texas Instruments Incorporated

Instance: TOP_AURORA_TX

Type: RW

Table 11-1040. TOP_AURORA_TX:AURORA_TX_UFC_MESSAGE0

Bits	Field Name	Type	Reset	Description
31:00:00	AURORA_TX_UFC_MESSAGE0_MESSAGE0	RW	0x0000 0000	This register contains the octets 0 through 3 of the UFC message. All octets have a default value of 0x0A.

11.2.3.3.2.24 TOP_AURORA_TX:AURORA_TX_UFC_MESSAGE1

Address offset: 0x0000 006C

Physical address: 0x0306 006C

Instance: TOP_AURORA_TX

Type: RW

Table 11-1041. TOP_AURORA_TX:AURORA_TX_UFC_MESSAGE1

Bits	Field Name	Type	Reset	Description
31:00:00	AURORA_TX_UFC_MESSAGE1_MESSAGE1	RW	0x0000 0000	This register contains the octets 4 through 7 of the UFC message. All octets have a default value of 0x0A.

11.2.3.3.2.25 TOP_AURORA_TX:AURORA_TX_TWP_SYNC_CNT

Address offset: 0x0000 0070

Physical address: 0x0306 0070

Instance: TOP_AURORA_TX

Type: RW

Table 11-1042. TOP_AURORA_TX:AURORA_TX_TWP_SYNC_CNT

Bits	Field Name	Type	Reset	Description
9:00	AURORA_TX_TWP_SYNC_CNT_SYNC_CNT	RW	0x001	Number of TWP Sync Packet that would be sent if AURORA_TX_UDP_CONFIG::A_TX_UDP_CONFIG_TWP_SYNC_COMPRESSION_EN is 0x1. (Min Value 2)

11.2.3.3.2.26 TOP_AURORA_TX:AURORA_TX_INITIALIZE_REQ

Address offset: 0x0000 0080

Physical address: 0x0306 0080

Instance: TOP_AURORA_TX

Type: RW

Table 11-1043. TOP_AURORA_TX:AURORA_TX_INITIALIZE_REQ

Bits	Field Name	Type	Reset	Description
1	AURORA_TX_INITIALIZE_REQ_TX_INIT	RW	0	Write pulse bit field: The single bit input to trigger the initialization sequence. Asserting this bit starts Tx process.

11.2.3.3.2.27 TOP_AURORA_TX:AURORA_TX_UFC_MSG_REQ

Address offset: 0x0000 0084

Physical address: 0x0306 0084

Instance: TOP_AURORA_TX

Copyright © 2025 Texas Instruments Incorporated

Type: RW

Table 11-1044. TOP_AURORA_TX:AURORA_TX_UFC_MSG_REQ

Bits	Field Name	Type	Reset	Description
0	AURORA_TX_UFC_MSG_REQ_SEND_MSG	RW	0	Write pulse bit field: The bit that triggers the controller to send the MESSAGE0 and MESSAGE1 register contents as a UFC packet.

11.2.3.3.2.28 TOP_AURORA_TX:AURORA_TX_FLUSH_REQ

Address offset: 0x0000 0088

Physical address: 0x0306 0088

Instance: TOP_AURORA_TX

Type: RW

Table 11-1045. TOP_AURORA_TX:AURORA_TX_FLUSH_REQ

Bits	Field Name	Type	Reset	Description
0	AURORA_TX_FLUSH_REQ_TRIGGER	RW	0	Write pulse bit field: Flush trigger to aurora module. Refer programming sequence for more details

11.2.3.3.2.29 TOP_AURORA_TX:AURORA_TX_EOP_REQ

Address offset: 0x0000 008C

Physical address: 0x0306 008C

Instance: TOP_AURORA_TX

Type: RW

Table 11-1046. TOP_AURORA_TX:AURORA_TX_EOP_REQ

Bits	Field Name	Type	Reset	Description
0	AURORA_TX_EOP_REQ_TRIGGER	RW	0	Write pulse bit field: SW End of Packet trigger to aurora dataframer.

11.2.3.3.2.30 TOP_AURORA_TX:AURORA_TX_DATA_START_REQ

Address offset: 0x0000 0090

Physical address: 0x0306 0090

Instance: TOP_AURORA_TX

Type: RW

Table 11-1047. TOP_AURORA_TX:AURORA_TX_DATA_START_REQ

Bits	Field Name	Type	Reset	Description
1	AURORA_TX_DATA_START_REQ_DATA_START	RW	0	Write pulse bit field: The single bit input to trigger the initialization sequence. Asserting this bit starts Tx process.

11.2.3.3.2.31 TOP_AURORA_TX:AURORA_TX_DATA_STOP_REQ

Address offset: 0x0000 0094

Physical address: 0x0306 0094

Copyright © 2025 Texas Instruments Incorporated

Instance: TOP_AURORA_TX

Type: RW

Table 11-1048. TOP_AURORA_TX:AURORA_TX_DATA_STOP_REQ

Bits	Field Name	Type	Reset	Description
1	AURORA_TX_DATA_STOP_REQ_DATA_STOP	RW	0	Write pulse bit field: The single bit input to trigger the Stop of Data Transmission

11.2.3.3.2.32 TOP_AURORA_TX:AURORA_TX_TESTPATTERN_START_REQ

Address offset: 0x0000 0098

Physical address: 0x0306 0098

Instance: TOP_AURORA_TX

Type: RW

Table 11-1049. TOP_AURORA_TX:AURORA_TX_TESTPATTERN_START_REQ

Bits	Field Name	Type	Reset	Description
1	AURORA_TX_TESTPATTERN_START_REQ_TEST_PATTERN_START	RW	0	Write pulse bit field: The single bit input to trigger the Start of Data Transmission

11.2.3.3.2.33 TOP_AURORA_TX:AURORA_TX_TESTPATTERN_STOP_REQ

Address offset: 0x0000 009C

Physical address: 0x0306 009C

Instance: TOP_AURORA_TX

Type: RW

Table 11-1050. TOP_AURORA_TX:AURORA_TX_TESTPATTERN_STOP_REQ

Bits	Field Name	Type	Reset	Description
1	AURORA_TX_TESTPATTERN_STOP_REQ_TEST_PATTERN_STOP	RW	0	Write pulse bit field: The single bit input to trigger the Stop of TestPattern Transmission

11.2.3.3.2.34 TOP_AURORA_TX:AURORA_TX_OVERRIDE

Address offset: 0x0000 0100

Physical address: 0x0306 0100

Instance: TOP_AURORA_TX

Type: RW

Table 11-1051. TOP_AURORA_TX:AURORA_TX_OVERRIDE

Bits	Field Name	Type	Reset	Description
22	AURORA_TX_OVERRIDE_CC1_OVR_TYP	RW	0	For Debug Purposes only. Do not modify
21	AURORA_TX_OVERRIDE_CC0_OVR_TYP	RW	0	For Debug Purposes only. Do not modify
20	AURORA_TX_OVERRIDE_INIT_V3_OVR_TYP	RW	0	For Debug Purposes only. Do not modify
19	AURORA_TX_OVERRIDE_INIT_V2_OVR_TYP	RW	0	For Debug Purposes only. Do not modify

Copyright © 2025 Texas Instruments Incorporated

Table 11-1051. TOP_AURORA_TX:AURORA_TX_OVERRIDE (continued)

Bits	Field Name	Type	Reset	Description
18	AURORA_TX_OVERRIDE_INIT_V1_OVR_TYP	RW	0	For Debug Purposes only. Do not modify
17	AURORA_TX_OVERRIDE_INIT_V0_OVR_TYP	RW	0	For Debug Purposes only. Do not modify
16	AURORA_TX_OVERRIDE_INIT_SP3_OVR_TYP	RW	0	For Debug Purposes only. Do not modify
15	AURORA_TX_OVERRIDE_INIT_SP2_OVR_TYP	RW	0	For Debug Purposes only. Do not modify
14	AURORA_TX_OVERRIDE_INIT_SP1_OVR_TYP	RW	0	For Debug Purposes only. Do not modify
13	AURORA_TX_OVERRIDE_INIT_SP0_OVR_TYP	RW	0	For Debug Purposes only. Do not modify
12	AURORA_TX_OVERRIDE_UFC_SUF_OVR_TYP	RW	0	For Debug Purposes only. Do not modify
11	AURORA_TX_OVERRIDE_I2_OVR_TYP	RW	0	For Debug Purposes only. Do not modify
10	AURORA_TX_OVERRIDE_I1_OVR_TYP	RW	0	For Debug Purposes only. Do not modify
9	AURORA_TX_OVERRIDE_I0_OVR_TYP	RW	0	For Debug Purposes only. Do not modify
8	AURORA_TX_OVERRIDE_SYM_OVR_EN	RW	0	For Debug Purposes only. Do not modify
7:04	AURORA_TX_OVERRIDE_TX_STATE_OVR_VAL	RW	0x0	Reserved for HW R and D. Do not modify
0	AURORA_TX_OVERRIDE_TX_STATE_OVR_EN	RW	0	For Debug Purposes only. Do not modify

11.2.3.3.2.35 TOP_AURORA_TX:AURORA_TX_8B10B_OVERRIDE0

Address offset: 0x0000 0104

Physical address: 0x0306 0104

Instance: TOP_AURORA_TX

Type: RW

Table 11-1052. TOP_AURORA_TX:AURORA_TX_8B10B_OVERRIDE0

Bits	Field Name	Type	Reset	Description
31:24:00	AURORA_TX_8B10B_OVERRIDE0_UFC_SUF	RW	0x00	For Debug Purposes only. Do not modify
23:16	AURORA_TX_8B10B_OVERRIDE0_I2	RW	0x00	For Debug Purposes only. Do not modify
15:08	AURORA_TX_8B10B_OVERRIDE0_I1	RW	0x00	For Debug Purposes only. Do not modify
7:00	AURORA_TX_8B10B_OVERRIDE0_I0	RW	0x00	For Debug Purposes only. Do not modify

11.2.3.3.2.36 TOP_AURORA_TX:AURORA_TX_8B10B_OVERRIDE1

Address offset: 0x0000 0108

Physical address: 0x0306 0108

Instance: TOP_AURORA_TX

Type: RW

Table 11-1053. TOP_AURORA_TX:AURORA_TX_8B10B_OVERRIDE1

Bits	Field Name	Type	Reset	Description
31:24:00	AURORA_TX_8B10B_OVERRIDE1_SP3	RW	0x00	For Debug Purposes only. Do not modify
23:16	AURORA_TX_8B10B_OVERRIDE1_SP2	RW	0x00	For Debug Purposes only. Do not modify

Copyright © 2025 Texas Instruments Incorporated

Table 11-1053. TOP_AURORA_TX:AURORA_TX_8B10B_OVERRIDE1 (continued)

Bits	Field Name	Type	Reset	Description
15:08	AURORA_TX_8B10B_OVERRIDE1_SP1	RW	0x00	For Debug Purposes only. Do not modify
7:00	AURORA_TX_8B10B_OVERRIDE1_SP0	RW	0x00	For Debug Purposes only. Do not modify

11.2.3.3.2.37 TOP_AURORA_TX:AURORA_TX_8B10B_OVERRIDE2

Address offset: 0x0000 010C

Physical address: 0x0306 010C

Instance: TOP_AURORA_TX

Type: RW

Table 11-1054. TOP_AURORA_TX:AURORA_TX_8B10B_OVERRIDE2

Bits	Field Name	Type	Reset	Description
31:24:00	AURORA_TX_8B10B_OVERRIDE2_V3	RW	0x00	For Debug Purposes only. Do not modify
23:16	AURORA_TX_8B10B_OVERRIDE2_V2	RW	0x00	For Debug Purposes only. Do not modify
15:08	AURORA_TX_8B10B_OVERRIDE2_V1	RW	0x00	For Debug Purposes only. Do not modify
7:00	AURORA_TX_8B10B_OVERRIDE2_V0	RW	0x00	For Debug Purposes only. Do not modify

11.2.3.3.2.38 TOP_AURORA_TX:AURORA_TX_8B10B_OVERRIDE3

Address offset: 0x0000 0110

Physical address: 0x0306 0110

Instance: TOP_AURORA_TX

Type: RW

Table 11-1055. TOP_AURORA_TX:AURORA_TX_8B10B_OVERRIDE3

Bits	Field Name	Type	Reset	Description
15:08	AURORA_TX_8B10B_OVERRIDE3_CC1	RW	0x00	For Debug Purposes only. Do not modify
7:00	AURORA_TX_8B10B_OVERRIDE3_CC0	RW	0x00	For Debug Purposes only. Do not modify

11.2.3.3.2.39 TOP_AURORA_TX:AURORA_TX_64B66B_OVERRIDE1

Address offset: 0x0000 0114

Physical address: 0x0306 0114

Instance: TOP_AURORA_TX

Type: RW

Table 11-1056. TOP_AURORA_TX:AURORA_TX_64B66B_OVERRIDE1

Bits	Field Name	Type	Reset	Description
31:24:00	AURORA_TX_64B66B_OVERRIDE1_CB_BITS	RW	0x00	For Debug Purposes only. Do not modify
23:16	AURORA_TX_64B66B_OVERRIDE1_CB_BTF	RW	0x78	For Debug Purposes only. Do not modify

Copyright © 2025 Texas Instruments Incorporated

Table 11-1056. TOP_AURORA_TX:AURORA_TX_64B66B_OVERRIDE1 (continued)

Bits	Field Name	Type	Reset	Description
15:08	AURORA_TX_64B66B_OVERRIDE1_IDLE_BITS	RW	0x00	For Debug Purposes only. Do not modify
7:00	AURORA_TX_64B66B_OVERRIDE1_IDLE_BTF	RW	0x78	For Debug Purposes only. Do not modify

11.2.3.3.2.40 TOP_AURORA_TX:AURORA_TX_64B66B_OVERRIDE2

Address offset: 0x0000 0118

Physical address: 0x0306 0118

Instance: TOP_AURORA_TX

Type: RW

Table 11-1057. TOP_AURORA_TX:AURORA_TX_64B66B_OVERRIDE2

Bits	Field Name	Type	Reset	Description
23:16	AURORA_TX_64B66B_OVERRIDE2_CC_BITS	RW	0x80	For Debug Purposes only. Do not modify
15:08	AURORA_TX_64B66B_OVERRIDE2_CC_BTF	RW	0x78	For Debug Purposes only. Do not modify
7:00	AURORA_TX_64B66B_OVERRIDE2_UFC_BTF	RW	0x2D	For Debug Purposes only. Do not modify

11.2.3.3.2.41 TOP_AURORA_TX:AURORA_TX_64B66B_OVERRIDE3

Address offset: 0x0000 011C

Physical address: 0x0306 011C

Instance: TOP_AURORA_TX

Type: RW

Table 11-1058. TOP_AURORA_TX:AURORA_TX_64B66B_OVERRIDE3

Bits	Field Name	Type	Reset	Description
15:08	AURORA_TX_64B66B_OVERRIDE3_SEP7_BTF	RW	0xE1	For Debug Purposes only. Do not modify
7:00	AURORA_TX_64B66B_OVERRIDE3_SEP_BTF	RW	0x1E	For Debug Purposes only. Do not modify

11.2.3.3.2.42 TOP_AURORA_TX:AURORA_TX_INIT_CNT_LRC

Address offset: 0x0000 0124

Physical address: 0x0306 0124

Instance: TOP_AURORA_TX

Type: RW

Table 11-1059. TOP_AURORA_TX:AURORA_TX_INIT_CNT_LRC

Bits	Field Name	Type	Reset	Description
31:00:00	AURORA_TX_INIT_CNT_LRC_LRC_N	RW	0x0000 0000	The 32-bit count value used to move from the TXRESET1 state to the TXINIT0 state. This value indicates the number of times the /SP/ sequence is sent in the TXRESET1 state.

Copyright © 2025 Texas Instruments Incorporated

11.2.3.3.2.43 TOP_AURORA_TX:AURORA_TX_INIT_CNT_ALIGN

Address offset: 0x0000 0128

Physical address: 0x0306 0128

Instance: TOP_AURORA_TX

Type: RW

Table 11-1060. TOP_AURORA_TX:AURORA_TX_INIT_CNT_ALIGN

Bits	Field Name	Type	Reset	Description
19:16	AURORA_TX_INIT_CNT_ALIGN_ALIGN_MUL	RW	0x0	Alignment pattern multiplier. Defines the multiplier used in conjunction with ALIGN_LEN when performing link initialization. 0000b: Alignment pattern multiplier is 32. 0001b: Reserved. 0010b: Reserved. 0011b: Reserved. 0100b: Reserved. Otherwise Alignment pattern multiplier is 2n, where n is the value of this field.
12:00	AURORA_TX_INIT_CNT_ALIGN_ALIGN_LEN	RW	0x0000	The number of times the Aurora alignment pattern is sent. Number of patterns = ALIGN_MUL*(ALIGN_LEN + 1).

11.2.3.3.2.44 TOP_AURORA_TX:AURORA_TX_INIT_CNT_BONDING

Address offset: 0x0000 012C

Physical address: 0x0306 012C

Instance: TOP_AURORA_TX

Type: RW

Table 11-1061. TOP_AURORA_TX:AURORA_TX_INIT_CNT_BONDING

Bits	Field Name	Type	Reset	Description
27:20:00	AURORA_TX_INIT_CNT_BONDING_NO_OF_IDLES	RW	0x04	The 64B standard mentions that There must be at least four Idle blocks between each Channel Bonding block. in Table 4-1 of the 4.2.1 Lane Initialization section. The user could specify 1 to 16 Idle blocks between the Channel Bonding block. It is not recommended to use less than 4 Idle Blocks between the Channel Bonding blocks. The default value of this field at reset is 4. Permissible values: 8'h01 : No of Idle Blocks between Channel Bonding blocks = 1 8'h02 : No of Idle Blocks between Channel Bonding blocks = 2 8'hFF : No of Idle Blocks between Channel Bonding blocks = 255 Do not program 8'h00.

Copyright © 2025 Texas Instruments Incorporated

Table 11-1061. TOP_AURORA_TX:AURORA_TX_INIT_CNT_BONDING (continued)

Bits	Field Name	Type	Reset	Description
19:16	AURORA_TX_INIT_CNT_BONDING_BOND_MUL	RW	0x0	Bond pattern multiplier. Defines the multiplier used in conjunction with BOND_LEN when performing link initialization. 0000b: Bond pattern multiplier is 4. 0001b: Reserved. Otherwise Bond pattern multiplier is 2n, where n is the value of this field.
8:00	AURORA_TX_INIT_CNT_BONDING_BOND_LEN	RW	0x000	The number of times the Aurora bonding pattern is sent. Number of patterns = BOND_MUL*(BOND_LEN + 1).

11.2.3.3.2.45 TOP_AURORA_TX:AURORA_TX_INIT_CNT_VERIFY

Address offset: 0x0000 0130

Physical address: 0x0306 0130

Instance: TOP_AURORA_TX

Type: RW

Table 11-1062. TOP_AURORA_TX:AURORA_TX_INIT_CNT_VERIFY

Bits	Field Name	Type	Reset	Description
19:16	AURORA_TX_INIT_CNT_VERIFY_VERIFY_MUL	RW	0x0	Verify pattern multiplier. Defines the multiplier used in conjunction with VERIFY_LEN when performing link initialization. 0000b: Verify pattern multiplier is 4. 0001b: Reserved. Otherwise Verify pattern multiplier is 2n, where n is the value of this field.
8:00	AURORA_TX_INIT_CNT_VERIFY_VERIFY_LEN	RW	0x000	The number of times the Aurora verification pattern is sent. Number of patterns = VERIFY_MUL*(VERIFY_LEN + 1).

11.2.3.3.2.46 TOP_AURORA_TX:AURORA_TX_INIT_CTRL

Address offset: 0x0000 0134

Physical address: 0x0306 0134

Instance: TOP_AURORA_TX

Type: RW

Table 11-1063. TOP_AURORA_TX:AURORA_TX_INIT_CTRL

Bits	Field Name	Type	Reset	Description
2	AURORA_TX_INIT_CTRL_TX_VERIFIED	RW	0	The single bit input to trigger the transition from the verification state to the channel ready state.
1	AURORA_TX_INIT_CTRL_TX_BONDED	RW	0	The single bit input to trigger the transition from the bonding to the verification state.
0	AURORA_TX_INIT_CTRL_TX_ALIGNED	RW	0	The single bit input to trigger the Stop of TestPattern Transmission

11.2.3.3.2.47 TOP_AURORA_TX:AURORA_TX_IDLE_CTRL

Address offset: 0x0000 0138

Physical address: 0x0306 0138

Copyright © 2025 Texas Instruments Incorporated

Instance: TOP_AURORA_TX

Type: RW

Table 11-1064. TOP_AURORA_TX:AURORA_TX_IDLE_CTRL

Bits	Field Name	Type	Reset	Description
5:02	AURORA_TX_IDLE_CTRL_SEED	RW	0x0	The 4-bit value used to seed the pseudo random integer used in the idle sequence generator.

11.2.3.3.2.48 TOP_AURORA_TX:AURORA_TX_IDLE_REQ

Address offset: 0x0000 013C

Physical address: 0x0306 013C

Instance: TOP_AURORA_TX

Type: RW

Table 11-1065. TOP_AURORA_TX:AURORA_TX_IDLE_REQ

Bits	Field Name	Type	Reset	Description
0	AURORA_TX_IDLE_REQ_SEND_IDLE	RW	0	Write pulse bit field: This bit is used to trigger the insertion of the IDLE sequence by the software. The IDLE FSM will insert the IDLE sequence octets at the earliest possible opportunity.

11.2.3.3.2.49 TOP_AURORA_TX:AURORA_TX_CC_REQ

Address offset: 0x0000 0140

Physical address: 0x0306 0140

Instance: TOP_AURORA_TX

Type: RW

Table 11-1066. TOP_AURORA_TX:AURORA_TX_CC_REQ

Bits	Field Name	Type	Reset	Description
1	AURORA_TX_CC_REQ_SEND_CC	RW	0	Write pulse bit field: The single bit input that can trigger a CC sequence. The internal FSM will insert a CC sequence at the earliest possible opportunity.

11.2.3.3.2.50 TOP_AURORA_TX:AURORA_TX_CC_CNT

Address offset: 0x0000 0144

Physical address: 0x0306 0144

Instance: TOP_AURORA_TX

Type: RW

Table 11-1067. TOP_AURORA_TX:AURORA_TX_CC_CNT

Bits	Field Name	Type	Reset	Description
15:00	AURORA_TX_CC_CNT_SYNC_COUNT	RW	0x26FC	The 16-bit count value used to indicate the number of code group octets after which the CC sequence should be transmitted. Default is 0x26FC (decimal 9980) and increasing the period beyond this value is not advised as corruption of data can occur.

Copyright © 2025 Texas Instruments Incorporated

11.2.3.3.2.51 TOP_AURORA_TX:AURORA_TX_CB_STATUS

Address offset: 0x0000 0148

Physical address: 0x0306 0148

Instance: TOP_AURORA_TX

Type: RW

Table 11-1068. TOP_AURORA_TX:AURORA_TX_CB_STATUS

Bits	Field Name	Type	Reset	Description
0	AURORA_TX_CB_STATUS_CB_COMP	RW	0	This bit reflects the state of the Channel Bonding FSM. Read 0 : CB Block is not complete. Read 1 : CB Block is complete. Write 0 : No effect. Write 1 : Clears the bit. Setting the SEND_CB bit also clears this bit. This bit is applicable only in the 64B/66B protocol mode after the Channel Ready state has been reached.

11.2.3.3.2.52 TOP_AURORA_TX:AURORA_TX_CB_REQ

Address offset: 0x0000 014C

Physical address: 0x0306 014C

Instance: TOP_AURORA_TX

Type: RW

Table 11-1069. TOP_AURORA_TX:AURORA_TX_CB_REQ

Bits	Field Name	Type	Reset	Description
1	AURORA_TX_CB_REQ_SEND_CB	RW	0	Write pulse bit field: The single bit input that can trigger a Channel Bonding Block. The internal FSM will insert a Channel Bonding sequence at the earliest possible opportunity. This bit is applicable only in the 64B/66B protocol mode after the Channel Ready state has been reached.

11.2.3.3.2.53 TOP_AURORA_TX:AURORA_TX_CB_CNT

Address offset: 0x0000 0150

Physical address: 0x0306 0150

Instance: TOP_AURORA_TX

Type: RW

Copyright © 2025 Texas Instruments Incorporated

Table 11-1070. TOP_AURORA_TX:AURORA_TX_CB_CNT

Bits	Field Name	Type	Reset	Description
15:00	AURORA_TX_CB_CNT_CB_COUNT	RW	0x4E20	The 16-bit count value used to indicate the number of data blocks after which the Channel Bonding sequence should be transmitted. The default value is 0x4E20 (decimal 20000). A value of zero will ensure that the Channel Bonding sequence is not sent periodically. In this case, the Channel Bonding sequence can only be sent by setting the SEND_CB bit in the AURORA_TX_CB_REQ register. This bit is applicable only in the 64B/66B protocol mode after the Channel Ready state has been reached.

11.2.3.3.2.54 TOP_AURORA_TX:AURORA_TX_RESET_REQ

Address offset: 0x0000 0154

Physical address: 0x0306 0154

Instance: TOP_AURORA_TX

Type: RW

Table 11-1071. TOP_AURORA_TX:AURORA_TX_RESET_REQ

Bits	Field Name	Type	Reset	Description
0	AURORA_TX_RESET_REQ_TX_RESET	RW	0	Write pulse bit field: The single bit input to reset the Tx process. Asserting this bit brings all internal FSMs to their reset state. (The TX_INIT bit must be asserted for the FSMs to continue to their next states after the reset state.)

11.2.3.3.2.55 TOP_AURORA_TX:AURORA_TX_SERIALIZER_OVERRIDE0

Address offset: 0x0000 0158

Physical address: 0x0306 0158

Instance: TOP_AURORA_TX

Type: RW

Table 11-1072. TOP_AURORA_TX:AURORA_TX_SERIALIZER_OVERRIDE0

Bits	Field Name	Type	Reset	Description
31:00:00	AURORA_TX_SERIALIZER_OVERRIDE0_VAL	RW	0x5E44 4400	Serialzer Override Value0 for Debug/Legacy modes. This value is not expected tp be changed

11.2.3.3.2.56 TOP_AURORA_TX:AURORA_TX_SERIALIZER_OVERRIDE1

Address offset: 0x0000 015C

Physical address: 0x0306 015C

Instance: TOP_AURORA_TX

Type: RW

Table 11-1073. TOP_AURORA_TX:AURORA_TX_SERIALIZER_OVERRIDE1

Bits	Field Name	Type	Reset	Description
31:00:00	AURORA_TX_SERIALIZER_OVERRIDE1_VAL	RW	0x0030 0000	Serialzer Override Value0 for Debug/Legacy modes. This value is not expected tp be changed

Copyright © 2025 Texas Instruments Incorporated

11.2.3.3.2.57 TOP_AURORA_TX:AURORA_TX_DATA_BYTE_REVERSE

Address offset: 0x0000 0160

Physical address: 0x0306 0160

Instance: TOP_AURORA_TX

Type: RW

Table 11-1074. TOP_AURORA_TX:AURORA_TX_DATA_BYTE_REVERSE

Bits	Field Name	Type	Reset	Description
1	AURORA_TX_DATA_BYTE_REVERSE_CRC_BYTE_REVERSE_EN	RW	0	Enable Byte reversal on the CRC value.
0	AURORA_TX_DATA_BYTE_REVERSE_BYTE_REVERSE_EN	RW	0	Enable Byte reversal on the input data. Aplicable only on the data from TPIU and Testpattern

11.2.3.3.2.58 TOP_AURORA_TX:AURORA_TX_64B66B_SCRAMBLER_INIT0

Address offset: 0x0000 0164

Physical address: 0x0306 0164

Instance: TOP_AURORA_TX

Type: RW

Table 11-1075. TOP_AURORA_TX:AURORA_TX_64B66B_SCRAMBLER_INIT0

Bits	Field Name	Type	Reset	Description
31:00:00	AURORA_TX_64B66B_SCRAMBLER_INIT0_VAL	RW	0xFFFF FFFF	Initial value in the LFSR scrambler bits[31:0]

11.2.3.3.2.59 TOP_AURORA_TX:AURORA_TX_64B66B_SCRAMBLER_INIT1

Address offset: 0x0000 0168

Physical address: 0x0306 0168

Instance: TOP_AURORA_TX

Type: RW

Table 11-1076. TOP_AURORA_TX:AURORA_TX_64B66B_SCRAMBLER_INIT1

Bits	Field Name	Type	Reset	Description
31	AURORA_TX_64B66B_SCRAMBLER_INIT1_LOAD	RW	0	Write 0x1 to loaf the scrambler lfsr init value
25:00:00	AURORA_TX_64B66B_SCRAMBLER_INIT1_VAL	RW	0x3FF FFFF	Initial value in the LFSR scrambler bits[57:32]

11.2.3.3.2.60 TOP_AURORA_TX:AURORA_TX_TESTPATTERN_CTRL

Address offset: 0x0000 016C

Physical address: 0x0306 016C

Instance: TOP_AURORA_TX

Type: RW

Table 11-1077. TOP_AURORA_TX:AURORA_TX_TESTPATTERN_CTRL

Bits	Field Name	Type	Reset	Description
0	AURORA_TX_TESTPATTERN_CTRL_RAMP_EN	RW	0	Enable a ramp patten as the testpattern

Copyright © 2025 Texas Instruments Incorporated

11.2.3.3.2.61 TOP_AURORA_TX:AURORA_TX_CC_SEQ_CNT

Address offset: 0x0000 0170

Physical address: 0x0306 0170

Instance: TOP_AURORA_TX

Type: RW

Table 11-1078. TOP_AURORA_TX:AURORA_TX_CC_SEQ_CNT

Bits	Field Name	Type	Reset	Description
19:16	AURORA_TX_CC_SEQ_CNT_COUNT_64B66B	RW	0x2	Configure the number of 64b66b Clock Compensation block to be sent. The default value is as per the Aurora Spec. This is intented for Debug purposes only.
3:00	AURORA_TX_CC_SEQ_CNT_COUNT_8B10B	RW	0xB	Configure the number of 8b10b Clock Compensation octets to be sent. The default value is as per the Aurora Spec. This is intented for Debug purposes only.

11.2.3.3.2.62 TOP_AURORA_TX:AURORA_TX_EOP_DELAY

Address offset: 0x0000 0174

Physical address: 0x0306 0174

Instance: TOP_AURORA_TX

Type: RW

Table 11-1079. TOP_AURORA_TX:AURORA_TX_EOP_DELAY

Bits	Field Name	Type	Reset	Description
16	AURORA_TX_EOP_DELAY_ENABLE	RW	0	Write 0x1 to this fiel to enable the delay configured in AURORA_TX_EOP_DEALY::DELAY
15:00	AURORA_TX_EOP_DELAY_DELAY	RW	0x0000	Internal Delay between the Data Framer and the Controller Block to stall data to the controller and force IDLES to be inserted by the controller after an ECP of a UDP. This is a feature added for Debug Purposes only and has not been tested

11.2.3.3.2.63 TOP_AURORA_TX:AURORA_TX_FLUSH_DELAY

Address offset: 0x0000 0178

Physical address: 0x0306 0178

Instance: TOP_AURORA_TX

Type: RW

Table 11-1080. TOP_AURORA_TX:AURORA_TX_FLUSH_DELAY

Bits	Field Name	Type	Reset	Description
7:00	AURORA_TX_FLUSH_DELAY_DELAY	RW	0x10	Write 0x1 to this field to enable the delay configured in AURORA_TX_EOP_DEALY::DELAY

11.2.3.3.2.64 TOP_AURORA_TX:AURORA_TX_STATUS

Address offset: 0x0000 0200

Physical address: 0x0306 0200

Instance: TOP_AURORA_TX

Type: RO

Copyright © 2025 Texas Instruments Incorporated

Table 11-1081. TOP_AURORA_TX:AURORA_TX_STATUS

Bits	Field Name	Type	Reset	Description
31:16:00	AURORA_TX_STATUS_DATAFRAMER	RO	0x0000	Dataframer Status fields Bit 16 : Write on Full FIFO Bit 17 : Read on Empty FIFO Bits [20:18] : Run State 000 : OFF 001 : INIT DONE 010 : TEST MODE 011 : DATA MODE 100 : WAITING FOR GLOBAL FLUSH DONE 101 : FLUSH IN PROGRESS Bits [26:21] : Data Available in Internal FIFO
3:00	AURORA_TX_STATUS_TX_STATE	RO	0x0	These read only bits indicate the state of the transmitter in 8B/10B and 64B/66B. 0000 : Reset, no transmission. 0001 : Initialization 0010 : Clock Compensation 0011 : Idle 0100 : UFC 0101 : Run (data) 0110 : Test (data) 0111 : Reserved 1111 : Reserved The user must note that these bits reflect the controller state and that the actual octets on the PHY lines may differ due to internal data path latencies.

11.2.3.3.2.65 TOP_AURORA_TX:AURORA_TX_INIT_STATUS

Address offset: 0x0000 0204

Physical address: 0x0306 0204

Instance: TOP_AURORA_TX

Type: RO

Table 11-1082. TOP_AURORA_TX:AURORA_TX_INIT_STATUS

Bits	Field Name	Type	Reset	Description
4	AURORA_TX_INIT_STATUS_TX_CH_RDY	RO	0	The status bit that indicates that the channel ready state has been reached. This bit is reset with the device reset and when the TX_RESET bit is set.
3	AURORA_TX_INIT_STATUS_TX_TXCB0	RO	0	The status bit that indicates that the TX_ TXCB0 state has been completed. This bit is reset with the device reset and when the TX_RESET bit is set.
2	AURORA_TX_INIT_STATUS_TX_INIT0	RO	0	The status bit that indicates that the TX_INIT0 state has been completed. This bit is reset with the device reset and when the TX_RESET bit is set.
1	AURORA_TX_INIT_STATUS_TX_RESET1	RO	0	The status bit that indicates that the TX_RESET1 state has been completed. This bit is reset with the device reset and when the TX_RESET bit is set.
0	AURORA_TX_INIT_STATUS_TX_RESET0	RO	0	The status bit that indicates that the TX_RESET0 state has been completed. This bit is reset with the device reset and when the TX_RESET bit is set.

Copyright © 2025 Texas Instruments Incorporated

11.2.3.3.2.66 TOP_AURORA_TX:AURORA_TX_CC_STATUS

Address offset: 0x0000 0208

Physical address: 0x0306 0208

Instance: TOP_AURORA_TX

Type: RW

Table 11-1083. TOP_AURORA_TX:AURORA_TX_CC_STATUS

Bits	Field Name	Type	Reset	Description
0	AURORA_TX_CC_STATUS_CC_COMP	RW	0	This bit reflects the state of the CC FSM. Read 0 : CC sequence is not complete. Read 1 : CC sequence is complete. Write 0 : No effect. Write 1 : Clears the bit. Setting the SEND_CC bit also clears this bit.

11.2.3.3.2.67 TOP_AURORA_TX:AURORA_TX_IDLE_STATUS

Address offset: 0x0000 020C

Physical address: 0x0306 020C

Instance: TOP_AURORA_TX

Type: RW

Table 11-1084. TOP_AURORA_TX:AURORA_TX_IDLE_STATUS

Bits	Field Name	Type	Reset	Description
0	AURORA_TX_IDLE_STATUS_IDLE_COMP	RW	0	This bit reflects the state of the IDLE FSM. Read 0 : IDLE sequence is not complete. Read 1 : IDLE sequence is complete. Write 0 : No effect. Write 1 : Clears the bit. Setting the SEND_IDLE bit also clears this bit.

11.2.3.3.2.68 TOP_AURORA_TX:AURORA_TX_INTAGG_MASK

Address offset: 0x0000 0210

Physical address: 0x0306 0210

Instance: TOP_AURORA_TX

Type: RW

Table 11-1085. TOP_AURORA_TX:AURORA_TX_INTAGG_MASK

Bits	Field Name	Type	Reset	Description
15	AURORA_TX_INTAGG_MASK_INT15	RW	1	Reserved for HW RnD. Do not modify
14	AURORA_TX_INTAGG_MASK_INT14	RW	1	Reserved for HW RnD. Do not modify
13	AURORA_TX_INTAGG_MASK_INT13	RW	1	Reserved for HW RnD. Do not modify
12	AURORA_TX_INTAGG_MASK_INT12	RW	1	Reserved for HW RnD. Do not modify
11	AURORA_TX_INTAGG_MASK_INT11	RW	1	Reserved for HW RnD. Do not modify
10	AURORA_TX_INTAGG_MASK_INT10	RW	1	Reserved for HW RnD. Do not modify
9	AURORA_TX_INTAGG_MASK_INT9	RW	1	Reserved for HW RnD. Do not modify
8	AURORA_TX_INTAGG_MASK_INT8	RW	1	Reserved for HW RnD. Do not modify

Copyright © 2025 Texas Instruments Incorporated

Table 11-1085. TOP_AURORA_TX:AURORA_TX_INTAGG_MASK (continued)

Bits	Field Name	Type	Reset	Description
7	AURORA_TX_INTAGG_MASK_INT7	RW	1	Mask Interrupt AURORA_TX_HEADER_DONE 1 : Interrupt is Masked 0 : Interrupt is Unmasked
6	AURORA_TX_INTAGG_MASK_INT6	RW	1	Mask Interrupt AURORA_TX_EOP_DONE 1 : Interrupt is Masked 0 : Interrupt is Unmasked
5	AURORA_TX_INTAGG_MASK_INT5	RW	1	Mask Interrupt DATA_STOP_DONE 1 : Interrupt is Masked 0 : Interrupt is Unmasked
4	AURORA_TX_INTAGG_MASK_INT4	RW	1	Mask Interrupt AURORA_TX_CC_DONE 1 : Interrupt is Masked 0 : Interrupt is Unmasked
3	AURORA_TX_INTAGG_MASK_INT3	RW	1	Mask Interrupt AURORA_TX_UFC_SENT 1 : Interrupt is Masked 0 : Interrupt is Unmasked
2	AURORA_TX_INTAGG_MASK_INT2	RW	1	Mask Interrupt AURORA_TX_EXT_FLUSH_DONE 1 : Interrupt is Masked 0 : Interrupt is Unmasked
1	AURORA_TX_INTAGG_MASK_INT1	RW	1	Mask Interrupt AURORA_TX_FLUSH_DONE 1 : Interrupt is Masked 0 : Interrupt is Unmasked
0	AURORA_TX_INTAGG_MASK_INT0	RW	1	Mask Interrupt AURORA_TX_INIT_DONE 1 : Interrupt is Masked 0 : Interrupt is Unmasked

11.2.3.3.2.69 TOP_AURORA_TX:AURORA_TX_INTAGG_STATUS

Address offset: 0x0000 0214

Physical address: 0x0306 0214

Instance: TOP_AURORA_TX

Type: RW

Table 11-1086. TOP_AURORA_TX:AURORA_TX_INTAGG_STATUS

Bits	Field Name	Type	Reset	Description
15	AURORA_TX_INTAGG_STATUS_INT15	RW	0	Reserved for HW RnD. Do not modify
14	AURORA_TX_INTAGG_STATUS_INT14	RW	0	Reserved for HW RnD. Do not modify
13	AURORA_TX_INTAGG_STATUS_INT13	RW	0	Reserved for HW RnD. Do not modify
12	AURORA_TX_INTAGG_STATUS_INT12	RW	0	Reserved for HW RnD. Do not modify
11	AURORA_TX_INTAGG_STATUS_INT11	RW	0	Reserved for HW RnD. Do not modify
10	AURORA_TX_INTAGG_STATUS_INT10	RW	0	Reserved for HW RnD. Do not modify
9	AURORA_TX_INTAGG_STATUS_INT9	RW	0	Reserved for HW RnD. Do not modify
8	AURORA_TX_INTAGG_STATUS_INT8	RW	0	Reserved for HW RnD. Do not modify
7	AURORA_TX_INTAGG_STATUS_INT7	RW	0	Read of 0x1 indicates a rising edge was detected on the corresponding event line . This field indicates assertion of AURORA_TX_HEADER_DONE.
6	AURORA_TX_INTAGG_STATUS_INT6	RW	0	Read of 0x1 indicates a rising edge was detected on the corresponding event line . This field indicates assertion of AURORA_TX_EOP_DONE.

Copyright © 2025 Texas Instruments Incorporated

Table 11-1086. TOP_AURORA_TX:AURORA_TX_INTAGG_STATUS (continued)

Bits	Field Name	Type	Reset	Description
5	AURORA_TX_INTAGG_STATUS_INT5	RW	0	Read of 0x1 indicates a rising edge was detected on the corresponding event line . This field indicates assertion of DATA_STOP_DONE.
4	AURORA_TX_INTAGG_STATUS_INT4	RW	0	Read of 0x1 indicates a rising edge was detected on the corresponding event line . This field indicates assertion of AURORA_TX_CC_DONE
3	AURORA_TX_INTAGG_STATUS_INT3	RW	0	Read of 0x1 indicates a rising edge was detected on the corresponding event line . This field indicates assertion of AURORA_TX_UFC_SENT.
2	AURORA_TX_INTAGG_STATUS_INT2	RW	0	Read of 0x1 indicates a rising edge was detected on the corresponding event line . This field indicates assertion of AURORA_TX_EXT_FLUSH_DONE
1	AURORA_TX_INTAGG_STATUS_INT1	RW	0	Read of 0x1 indicates a rising edge was detected on the corresponding event line . This field indicates assertion of AURORA_TX_FLUSH_DONE
0	AURORA_TX_INTAGG_STATUS_INT0	RW	0	Read of 0x1 indicates a rising edge was detected on the corresponding event line . This field indicates assertion of AURORA_TX_INIT_DONE

11.2.3.3.2.70 TOP_AURORA_TX:AURORA_TX_INTAGG_STATUS_RAW

Address offset: 0x0000 0218

Physical address: 0x0306 0218

Instance: TOP_AURORA_TX

Type: RW

Table 11-1087. TOP_AURORA_TX:AURORA_TX_INTAGG_STATUS_RAW

Bits	Field Name	Type	Reset	Description
15	AURORA_TX_INTAGG_STATUS_RAW_INT15	RW	0	Reserved for HW RnD. Do not modify
14	AURORA_TX_INTAGG_STATUS_RAW_INT14	RW	0	Reserved for HW RnD. Do not modify
13	AURORA_TX_INTAGG_STATUS_RAW_INT13	RW	0	Reserved for HW RnD. Do not modify
12	AURORA_TX_INTAGG_STATUS_RAW_INT12	RW	0	Reserved for HW RnD. Do not modify
11	AURORA_TX_INTAGG_STATUS_RAW_INT11	RW	0	Reserved for HW RnD. Do not modify
10	AURORA_TX_INTAGG_STATUS_RAW_INT10	RW	0	Reserved for HW RnD. Do not modify
9	AURORA_TX_INTAGG_STATUS_RAW_INT9	RW	0	Reserved for HW RnD. Do not modify
8	AURORA_TX_INTAGG_STATUS_RAW_INT8	RW	0	Reserved for HW RnD. Do not modify
7	AURORA_TX_INTAGG_STATUS_RAW_INT7	RW	0	Read of 0x1 indicates a rising edge was detected on the corresponding event line . This is the raw status that will be asserted even if the event has been masked in AURORA_TX_INTAGG_MASK. This field indicates assertion of AURORA_TX_HEADER_DONE- Indicates completion of Frame Header transmission.

Copyright © 2025 Texas Instruments Incorporated

Table 11-1087. TOP_AURORA_TX:AURORA_TX_INTAGG_STATUS_RAW (continued)

Bits	Field Name	Type	Reset	Description
6	AURORA_TX_INTAGG_STATUS_RAW_INT6	RW	0	Read of 0x1 indicates a rising edge was detected on the corresponding event line . This is the raw status that will be asserted even if the event has been masked in AURORA_TX_INTAGG_MASK. This field indicates assertion of AURORA_TX_EOP_DONE-Indicates completion of UDP packets.
5	AURORA_TX_INTAGG_STATUS_RAW_INT5	RW	0	Read of 0x1 indicates a rising edge was detected on the corresponding event line . This is the raw status that will be asserted even if the event has been masked in AURORA_TX_INTAGG_MASK. This field indicates assertion of DATA_STOP_DONE.
4	AURORA_TX_INTAGG_STATUS_RAW_INT4	RW	0	Read of 0x1 indicates a rising edge was detected on the corresponding event line . This is the raw status that will be asserted even if the event has been masked in AURORA_TX_INTAGG_MASK. This field indicates assertion of AURORA_TX_CC_DONE-Indicate completion of Clock compensation sequence transmission.
3	AURORA_TX_INTAGG_STATUS_RAW_INT3	RW	0	Read of 0x1 indicates a rising edge was detected on the corresponding event line . This is the raw status that will be asserted even if the event has been masked in AURORA_TX_INTAGG_MASK. This field indicates assertion of AURORA_TX_UFC_SENT-Indicates that a UFC packet has been generated as sent.
2	AURORA_TX_INTAGG_STATUS_RAW_INT2	RW	1	Read of 0x1 indicates a rising edge was detected on the corresponding event line . This is the raw status that will be asserted even if the event has been masked in AURORA_TX_INTAGG_MASK. This field indicates assertion of AURORA_TX_EXT_FLUSH_DONE-Indicates that the MDO infrastructure has completed flushing is components
1	AURORA_TX_INTAGG_STATUS_RAW_INT1	RW	0	Read of 0x1 indicates a rising edge was detected on the corresponding event line . This is the raw status that will be asserted even if the event has been masked in AURORA_TX_INTAGG_MASK. This field indicates assertion of AURORA_TX_FLUSH_DONE -Indicates that the Aurora IP has completed flush operation on its Data FIFO
0	AURORA_TX_INTAGG_STATUS_RAW_INT0	RW	0	Read of 0x1 indicates a rising edge was detected on the corresponding event line . This is the raw status that will be asserted even if the event has been masked in AURORA_TX_INTAGG_MASK. This field indicates assertion of AURORA_TX_INIT_DONE - Indicates completion of Aurora Initilization sequence

11.2.3.3.2.71 TOP_AURORA_TX:AURORA_TX_ERRAGG_MASK

Address offset: 0x0000 021C

Physical address: 0x0306 021C

Instance: TOP_AURORA_TX

Type: RW

Table 11-1088. TOP_AURORA_TX:AURORA_TX_ERRAGG_MASK

Bits	Field Name	Type	Reset	Description
15	AURORA_TX_ERRAGG_MASK_ERR15	RW	1	Reserved for HW RnD. Do not modify
14	AURORA_TX_ERRAGG_MASK_ERR14	RW	1	Reserved for HW RnD. Do not modify

Copyright © 2025 Texas Instruments Incorporated

Table 11-1088. TOP_AURORA_TX:AURORA_TX_ERRAGG_MASK (continued)

Bits	Field Name	Type	Reset	Description
13	AURORA_TX_ERRAGG_MASK_ERR13	RW	1	Reserved for HW RnD. Do not modify
12	AURORA_TX_ERRAGG_MASK_ERR12	RW	1	Reserved for HW RnD. Do not modify
11	AURORA_TX_ERRAGG_MASK_ERR11	RW	1	Reserved for HW RnD. Do not modify
10	AURORA_TX_ERRAGG_MASK_ERR10	RW	1	Reserved for HW RnD. Do not modify
9	AURORA_TX_ERRAGG_MASK_ERR9	RW	1	Reserved for HW RnD. Do not modify
8	AURORA_TX_ERRAGG_MASK_ERR8	RW	1	Reserved for HW RnD. Do not modify
7	AURORA_TX_ERRAGG_MASK_ERR7	RW	1	Reserved for HW RnD. Do not modify
6	AURORA_TX_ERRAGG_MASK_ERR6	RW	1	Reserved for HW RnD. Do not modify
5	AURORA_TX_ERRAGG_MASK_ERR5	RW	1	Reserved for HW RnD. Do not modify
4	AURORA_TX_ERRAGG_MASK_ERR4	RW	1	Reserved for HW RnD. Do not modify
3	AURORA_TX_ERRAGG_MASK_ERR3	RW	1	Reserved for HW RnD. Do not modify
2	AURORA_TX_ERRAGG_MASK_ERR2	RW	1	Reserved for HW RnD. Do not modify
1	AURORA_TX_ERRAGG_MASK_ERR1	RW	1	Reserved for HW RnD. Do not modify
0	AURORA_TX_ERRAGG_MASK_ERR0	RW	1	Mask error AURORA_TX_UFC_ERR 1 : Error is Masked 0 : Error is Unmasked

11.2.3.3.2.72 TOP_AURORA_TX:AURORA_TX_ERRAGG_STATUS

Address offset: 0x0000 0220

Physical address: 0x0306 0220

Instance: TOP_AURORA_TX

Type: RW

Table 11-1089. TOP_AURORA_TX:AURORA_TX_ERRAGG_STATUS

Bits	Field Name	Type	Reset	Description
15	AURORA_TX_ERRAGG_STATUS_ERR15	RW	0	Reserved for HW RnD. Do not modify
14	AURORA_TX_ERRAGG_STATUS_ERR14	RW	0	Reserved for HW RnD. Do not modify
13	AURORA_TX_ERRAGG_STATUS_ERR13	RW	0	Reserved for HW RnD. Do not modify
12	AURORA_TX_ERRAGG_STATUS_ERR12	RW	0	Reserved for HW RnD. Do not modify
11	AURORA_TX_ERRAGG_STATUS_ERR11	RW	0	Reserved for HW RnD. Do not modify
10	AURORA_TX_ERRAGG_STATUS_ERR10	RW	0	Reserved for HW RnD. Do not modify
9	AURORA_TX_ERRAGG_STATUS_ERR9	RW	0	Reserved for HW RnD. Do not modify
8	AURORA_TX_ERRAGG_STATUS_ERR8	RW	0	Reserved for HW RnD. Do not modify
7	AURORA_TX_ERRAGG_STATUS_ERR7	RW	0	Reserved for HW RnD. Do not modify
6	AURORA_TX_ERRAGG_STATUS_ERR6	RW	0	Reserved for HW RnD. Do not modify
5	AURORA_TX_ERRAGG_STATUS_ERR5	RW	0	Reserved for HW RnD. Do not modify
4	AURORA_TX_ERRAGG_STATUS_ERR4	RW	0	Reserved for HW RnD. Do not modify
3	AURORA_TX_ERRAGG_STATUS_ERR3	RW	0	Reserved for HW RnD. Do not modify
2	AURORA_TX_ERRAGG_STATUS_ERR2	RW	0	Reserved for HW RnD. Do not modify
1	AURORA_TX_ERRAGG_STATUS_ERR1	RW	0	Reserved for HW RnD. Do not modify

Copyright © 2025 Texas Instruments Incorporated

Table 11-1089. TOP_AURORA_TX:AURORA_TX_ERRAGG_STATUS (continued)

Bits	Field Name	Type	Reset	Description
0	AURORA_TX_ERRAGG_STATUS_ERR0	RW	0	Read of 0x1 indicates a rising edge was detected on the corresponding Error event line . This field indicates assertion of Error AURORA_TX_UFC_ERR

11.2.3.3.2.73 TOP_AURORA_TX:AURORA_TX_ERRAGG_STATUS_RAW

Address offset: 0x0000 0224

Physical address: 0x0306 0224

Instance: TOP_AURORA_TX

Type: RW

Table 11-1090. TOP_AURORA_TX:AURORA_TX_ERRAGG_STATUS_RAW

Bits	Field Name	Type	Reset	Description
15	AURORA_TX_ERRAGG_STATUS_RAW_ERR15	RW	0	Reserved for HW RnD. Do not modify
14	AURORA_TX_ERRAGG_STATUS_RAW_ERR14	RW	0	Reserved for HW RnD. Do not modify
13	AURORA_TX_ERRAGG_STATUS_RAW_ERR13	RW	0	Reserved for HW RnD. Do not modify
12	AURORA_TX_ERRAGG_STATUS_RAW_ERR12	RW	0	Reserved for HW RnD. Do not modify
11	AURORA_TX_ERRAGG_STATUS_RAW_ERR11	RW	0	Reserved for HW RnD. Do not modify
10	AURORA_TX_ERRAGG_STATUS_RAW_ERR10	RW	0	Reserved for HW RnD. Do not modify
9	AURORA_TX_ERRAGG_STATUS_RAW_ERR9	RW	0	Reserved for HW RnD. Do not modify
8	AURORA_TX_ERRAGG_STATUS_RAW_ERR8	RW	0	Reserved for HW RnD. Do not modify
7	AURORA_TX_ERRAGG_STATUS_RAW_ERR7	RW	0	Reserved for HW RnD. Do not modify
6	AURORA_TX_ERRAGG_STATUS_RAW_ERR6	RW	0	Reserved for HW RnD. Do not modify
5	AURORA_TX_ERRAGG_STATUS_RAW_ERR5	RW	0	Reserved for HW RnD. Do not modify
4	AURORA_TX_ERRAGG_STATUS_RAW_ERR4	RW	0	Reserved for HW RnD. Do not modify
3	AURORA_TX_ERRAGG_STATUS_RAW_ERR3	RW	0	Reserved for HW RnD. Do not modify
2	AURORA_TX_ERRAGG_STATUS_RAW_ERR2	RW	0	Reserved for HW RnD. Do not modify
1	AURORA_TX_ERRAGG_STATUS_RAW_ERR1	RW	0	Reserved for HW RnD. Do not modify
0	AURORA_TX_ERRAGG_STATUS_RAW_ERR0	RW	0	Read of 0x1 indicates a rising edge was detected on the corresponding Error event line . This is the raw status that will be asseter even if the Error event has been masked in AURORA_TX_ERRAGG_MASK. This field indicates assertion of Error AURORA_TX_UFC_ERR - Inidcates that another UFC generation request was received with the IP was in the progress of transmitting the previous request.

Copyright © 2025 Texas Instruments Incorporated

11.2.3.3.2.74 TOP_AURORA_TX:AURORA_TX_SERIALIZER_STATUS0

Address offset: 0x0000 0228

Physical address: 0x0306 0228

Instance: TOP_AURORA_TX

Type: RO

Table 11-1091. TOP_AURORA_TX:AURORA_TX_SERIALIZER_STATUS0

Bits	Field Name	Type	Reset	Description
31:00:00	AURORA_TX_SERIALIZER_STATUS0_STATUS	RO	0x0000 AAAA	Status of the serializer. For debug purposes only

11.2.3.3.2.75 TOP_AURORA_TX:AURORA_TX_SERIALIZER_STATUS1

Address offset: 0x0000 022C

Physical address: 0x0306 022C

Instance: TOP_AURORA_TX

Type: RO

Table 11-1092. TOP_AURORA_TX:AURORA_TX_SERIALIZER_STATUS1

Bits	Field Name	Type	Reset	Description
31:00:00	AURORA_TX_SERIALIZER_STATUS1_STATUS	RO	0x0001 4444	Status of the serializer. For debug purposes only

11.2.3.3.2.76 TOP_AURORA_TX:AURORA_TX_TPIU_DATA_PACKED

Address offset: 0x0000 0230

Physical address: 0x0306 0230

Instance: TOP_AURORA_TX

Type: RO

Table 11-1093. TOP_AURORA_TX:AURORA_TX_TPIU_DATA_PACKED

Bits	Field Name	Type	Reset	Description
31:00:00	AURORA_TX_TPIU_DATA_PACKED_BYTES_PACKED	RO	0x0000 0000	Number of input tpiu bytes packed in the current aurora frame

11.2.3.3.2.77 TOP_AURORA_TX:HW_SPARE_RW0

Address offset: 0x0000 0FD0

Physical address: 0x0306 0FD0

Instance: TOP_AURORA_TX

Type: RW

Table 11-1094. TOP_AURORA_TX:HW_SPARE_RW0

Bits	Field Name	Type	Reset	Description
31:00:00	HW_SPARE_RW0_HW_SPARE_RW0	RW	0x0000 0000	Reserved for HW RnD

11.2.3.3.2.78 TOP_AURORA_TX:HW_SPARE_RW1

Address offset: 0x0000 0FD4

Physical address: 0x0306 0FD4

Copyright © 2025 Texas Instruments Incorporated

Instance: TOP_AURORA_TX

Type: RW

Table 11-1095. TOP_AURORA_TX:HW_SPARE_RW1

Bits	Field Name	Type	Reset	Description
31:00:00	HW_SPARE_RW1_HW_SPARE_RW1	RW	0x0000 0000	Reserved for HW RnD

11.2.3.3.2.79 TOP_AURORA_TX:HW_SPARE_RW2

Address offset: 0x0000 0FD8

Physical address: 0x0306 0FD8

Instance: TOP_AURORA_TX

Type: RW

Table 11-1096. TOP_AURORA_TX:HW_SPARE_RW2

Bits	Field Name	Type	Reset	Description
31:00:00	HW_SPARE_RW2_HW_SPARE_RW2	RW	0x0000 0000	Reserved for HW RnD

11.2.3.3.2.80 TOP_AURORA_TX:HW_SPARE_RW3

Address offset: 0x0000 0FDC

Physical address: 0x0306 0FDC

Instance: TOP_AURORA_TX

Type: RW

Table 11-1097. TOP_AURORA_TX:HW_SPARE_RW3

Bits	Field Name	Type	Reset	Description
31:00:00	HW_SPARE_RW3_HW_SPARE_RW3	RW	0x0000 0000	Reserved for HW RnD

11.2.3.3.2.81 TOP_AURORA_TX:HW_SPARE_RO0

Address offset: 0x0000 0FE0

Physical address: 0x0306 0FE0

Instance: TOP_AURORA_TX

Type: RO

Table 11-1098. TOP_AURORA_TX:HW_SPARE_RO0

Bits	Field Name	Type	Reset	Description
31:00:00	HW_SPARE_RO0_HW_SPARE_RO0	RO	0x0000 0000	Reserved for HW RnD

11.2.3.3.2.82 TOP_AURORA_TX:HW_SPARE_RO1

Address offset: 0x0000 0FE4

Physical address: 0x0306 0FE4

Instance: TOP_AURORA_TX

Type: RO

Copyright © 2025 Texas Instruments Incorporated

Table 11-1099. TOP_AURORA_TX:HW_SPARE_RO1

Bits	Field Name	Type	Reset	Description
31:00:00	HW_SPARE_RO1_HW_SPARE_RO1	RO	0x0000 0000	Reserved for HW RnD

11.2.3.3.2.83 TOP_AURORA_TX:HW_SPARE_RO2

Address offset: 0x0000 0FE8

Physical address: 0x0306 0FE8

Instance: TOP_AURORA_TX

Type: RO

Table 11-1100. TOP_AURORA_TX:HW_SPARE_RO2

Bits	Field Name	Type	Reset	Description
31:00:00	HW_SPARE_RO2_HW_SPARE_RO2	RO	0x0000 0000	Reserved for HW RnD

11.2.3.3.2.84 TOP_AURORA_TX:HW_SPARE_RO3

Address offset: 0x0000 0FEC

Physical address: 0x0306 0FEC

Instance: TOP_AURORA_TX

Type: RO

Table 11-1101. TOP_AURORA_TX:HW_SPARE_RO3

Bits	Field Name	Type	Reset	Description
31:00:00	HW_SPARE_RO3_HW_SPARE_RO3	RO	0x0000 0000	Reserved for HW RnD

11.2.3.3.2.85 TOP_AURORA_TX:HW_SPARE_WPH

Address offset: 0x0000 0FF0

Physical address: 0x0306 0FF0

Instance: TOP_AURORA_TX

Type: RW

Table 11-1102. TOP_AURORA_TX:HW_SPARE_WPH

Bits	Field Name	Type	Reset	Description
31:00:00	HW_SPARE_WPH_HW_SPARE_WPH	RW	0x0000 0000	Reserved for HW RnD

11.2.3.3.2.86 TOP_AURORA_TX:HW_SPARE_REC

Address offset: 0x0000 0FF4

Physical address: 0x0306 0FF4

Instance: TOP_AURORA_TX

Type: RW

Table 11-1103. TOP_AURORA_TX:HW_SPARE_REC

Bits	Field Name	Type	Reset	Description
31	HW_SPARE_REC_HW_SPARE_REC31	RW	0	Reserved for HW RnD
30	HW_SPARE_REC_HW_SPARE_REC30	RW	0	Reserved for HW RnD
29	HW_SPARE_REC_HW_SPARE_REC29	RW	0	Reserved for HW RnD
28	HW_SPARE_REC_HW_SPARE_REC28	RW	0	Reserved for HW RnD

Copyright © 2025 Texas Instruments Incorporated

Table 11-1103. TOP_AURORA_TX:HW_SPARE_REC (continued)

Bits	Field Name	Type	Reset	Description
27	HW_SPARE_REC_HW_SPARE_REC27	RW	0	Reserved for HW RnD
26	HW_SPARE_REC_HW_SPARE_REC26	RW	0	Reserved for HW RnD
25	HW_SPARE_REC_HW_SPARE_REC25	RW	0	Reserved for HW RnD
24	HW_SPARE_REC_HW_SPARE_REC24	RW	0	Reserved for HW RnD
23	HW_SPARE_REC_HW_SPARE_REC23	RW	0	Reserved for HW RnD
22	HW_SPARE_REC_HW_SPARE_REC22	RW	0	Reserved for HW RnD
21	HW_SPARE_REC_HW_SPARE_REC21	RW	0	Reserved for HW RnD
20	HW_SPARE_REC_HW_SPARE_REC20	RW	0	Reserved for HW RnD
19	HW_SPARE_REC_HW_SPARE_REC19	RW	0	Reserved for HW RnD
18	HW_SPARE_REC_HW_SPARE_REC18	RW	0	Reserved for HW RnD
17	HW_SPARE_REC_HW_SPARE_REC17	RW	0	Reserved for HW RnD
16	HW_SPARE_REC_HW_SPARE_REC16	RW	0	Reserved for HW RnD
15	HW_SPARE_REC_HW_SPARE_REC15	RW	0	Reserved for HW RnD
14	HW_SPARE_REC_HW_SPARE_REC14	RW	0	Reserved for HW RnD
13	HW_SPARE_REC_HW_SPARE_REC13	RW	0	Reserved for HW RnD
12	HW_SPARE_REC_HW_SPARE_REC12	RW	0	Reserved for HW RnD
11	HW_SPARE_REC_HW_SPARE_REC11	RW	0	Reserved for HW RnD
10	HW_SPARE_REC_HW_SPARE_REC10	RW	0	Reserved for HW RnD
9	HW_SPARE_REC_HW_SPARE_REC9	RW	0	Reserved for HW RnD
8	HW_SPARE_REC_HW_SPARE_REC8	RW	0	Reserved for HW RnD
7	HW_SPARE_REC_HW_SPARE_REC7	RW	0	Reserved for HW RnD
6	HW_SPARE_REC_HW_SPARE_REC6	RW	0	Reserved for HW RnD
5	HW_SPARE_REC_HW_SPARE_REC5	RW	0	Reserved for HW RnD
4	HW_SPARE_REC_HW_SPARE_REC4	RW	0	Reserved for HW RnD
3	HW_SPARE_REC_HW_SPARE_REC3	RW	0	Reserved for HW RnD
2	HW_SPARE_REC_HW_SPARE_REC2	RW	0	Reserved for HW RnD
1	HW_SPARE_REC_HW_SPARE_REC1	RW	0	Reserved for HW RnD
0	HW_SPARE_REC_HW_SPARE_REC0	RW	0	Reserved for HW RnD

11.2.3.3.2.87 TOP_AURORA_TX:LOCK0_KICK0

Address offset: 0x0000 1008

Physical address: 0x0306 1008

Instance: TOP_AURORA_TX

Description: TOP_AURORA_TX:LOCK0_KICK0

Type: RW

Table 11-1104. TOP_AURORA_TX:LOCK0_KICK0

Bits	Field Name	Type	Reset	Description
31:00:00	LOCK0_KICK0	RW	0x0000 0000	RESERVED, write has no impact

11.2.3.3.2.88 TOP_AURORA_TX:LOCK0_KICK1

Address offset: 0x0000 100C

Physical address: 0x0306 100C

Copyright © 2025 Texas Instruments Incorporated

Instance: TOP_AURORA_TX

Description: TOP_AURORA_TX:LOCK0_KICK1

Type: RW

Table 11-1105. TOP_AURORA_TX:LOCK0_KICK1

Bits	Field Name	Type	Reset	Description
31:00:00	LOCK0_KICK1	RW	0x0000 0000	RESERVED, write has no impact

11.2.3.3.2.89 TOP_AURORA_TX:INTR_RAW_STATUS

Address offset: 0x0000 1010

Physical address: 0x0306 1010

Instance: TOP_AURORA_TX

Description: Interrupt Raw Status/Set Register

Type: RW

Table 11-1106. TOP_AURORA_TX:INTR_RAW_STATUS

Bits	Field Name	Type	Reset	Description
3	PROXY_ERR	RW	0	Proxy0 access violation error. Raw status is read. Write a 1 to set the status. Writing a 0 has no effect.
2	KICK_ERR	RW	0	Kick access violation error. Raw status is read. Write a 1 to set the status. Writing a 0 has no effect.
1	ADDR_ERR	RW	0	Addressing violation error. Raw status is read. Write a 1 to set the status. Writing a 0 has no effect.
0	PROT_ERR	RW	0	Protection violation error. Raw status is read. Write a 1 to set the status. Writing a 0 has no effect.

11.2.3.3.2.90 TOP_AURORA_TX:INTR_ENABLED_STATUS_CLEAR

Address offset: 0x0000 1014

Physical address: 0x0306 1014

Instance: TOP_AURORA_TX

Description: Interrupt Enabled Status/Clear register

Type: RW

Table 11-1107. TOP_AURORA_TX:INTR_ENABLED_STATUS_CLEAR

Bits	Field Name	Type	Reset	Description
3	ENABLED_PROXY_ERR	RW	0	Proxy0 access violation error. Enabled status is read. Write a 1 to clear the status. Writing a 0 has no effect.
2	ENABLED_KICK_ERR	RW	0	Kick access violation error. Enabled status is read. Write a 1 to clear the status. Writing a 0 has no effect.
1	ENABLED_ADDR_ERR	RW	0	Addressing violation error. Enabled status is read. Write a 1 to clear the status. Writing a 0 has no effect.
0	ENABLED_PROT_ERR	RW	0	Protection violation error. Enabled status is read. Write a 1 to clear the status. Writing a 0 has no effect.

11.2.3.3.2.91 TOP_AURORA_TX:INTR_ENABLE

Address offset: 0x0000 1018

Physical address: 0x0306 1018

Copyright © 2025 Texas Instruments Incorporated

Instance: TOP_AURORA_TX

Description: Interrupt Enable register

Type: RW

Table 11-1108. TOP_AURORA_TX:INTR_ENABLE

Bits	Field Name	Type	Reset	Description
3	PROXY_ERR_EN	RW	0	Proxy0 access violation error enable. Write a 1 to set the enable. Writing a 0 has no effect.
2	KICK_ERR_EN	RW	0	Kick access violation error enable. Write a 1 to set the enable. Writing a 0 has no effect.
1	ADDR_ERR_EN	RW	0	Addressing violation error enable. Write a 1 to set the enable. Writing a 0 has no effect.
0	PROT_ERR_EN	RW	0	Protection violation error enable. Write a 1 to set the enable. Writing a 0 has no effect.

11.2.3.3.2.92 TOP_AURORA_TX:INTR_ENABLE_CLEAR

Address offset: 0x0000 101C

Physical address: 0x0306 101C

Instance: TOP_AURORA_TX

Description: Interrupt Enable Clear register

Type: RW

Table 11-1109. TOP_AURORA_TX:INTR_ENABLE_CLEAR

Bits	Field Name	Type	Reset	Description
3	PROXY_ERR_EN_CLR	RW	0	Proxy0 access violation error enable clear. Write a 1 to clear the enable. Writing a 0 has no effect.
2	KICK_ERR_EN_CLR	RW	0	Kick access violation error enable clear. Write a 1 to clear the enable. Writing a 0 has no effect.
1	ADDR_ERR_EN_CLR	RW	0	Addressing violation error enable clear. Write a 1 to clear the enable. Writing a 0 has no effect.
0	PROT_ERR_EN_CLR	RW	0	Protection violation error enable clear. Write a 1 to clear the enable. Writing a 0 has no effect.

11.2.3.3.2.93 TOP_AURORA_TX:EOI

Address offset: 0x0000 1020

Physical address: 0x0306 1020

Instance: TOP_AURORA_TX

Description: EOI register

Type: RW

Table 11-1110. TOP_AURORA_TX:EOI

Bits	Field Name	Type	Reset	Description
7:00	EOI_VECTOR	RW	0x00	EOI vector value. Write this with interrupt distribution value in the chip.

11.2.3.3.2.94 TOP_AURORA_TX:FAULT_ADDRESS

Address offset: 0x0000 1024

Physical address: 0x0306 1024

Copyright © 2025 Texas Instruments Incorporated

Instance: TOP_AURORA_TX

Description: Fault Address register

Type: RO

Table 11-1111. TOP_AURORA_TX:FAULT_ADDRESS

Bits	Field Name	Type	Reset	Description
31:00:00	FAULT_ADDR	RO	0x0000 0000	Fault Address.

11.2.3.3.2.95 TOP_AURORA_TX:FAULT_TYPE_STATUS

Address offset: 0x0000 1028

Physical address: 0x0306 1028

Instance: TOP_AURORA_TX

Description: Fault Type Status register

Type: RO

Table 11-1112. TOP_AURORA_TX:FAULT_TYPE_STATUS

Bits	Field Name	Type	Reset	Description
6	FAULT_NS	RO	0	Non-secure access.
5:00	FAULT_TYPE	RO	0x00	Fault Type 10_0000 = Supervisor read fault - priv = 1 dir = 1 dtype != 1 01_0000 = Supervisor write fault - priv = 1 dir = 0 00_1000 = Supervisor execute fault - priv = 1 dir = 1 dtype = 1 00_0100 = User read fault - priv = 0 dir = 1 dtype = 1 00_0010 = User write fault - priv = 0 dir = 0 00_0001 = User execute fault - priv = 0 dir = 1 dtype = 1 00_0000 = No fault

11.2.3.3.2.96 TOP_AURORA_TX:FAULT_ATTR_STATUS

Address offset: 0x0000 102C

Physical address: 0x0306 102C

Instance: TOP_AURORA_TX

Description: Fault Attribute Status register

Type: RO

Table 11-1113. TOP_AURORA_TX:FAULT_ATTR_STATUS

Bits	Field Name	Type	Reset	Description
31:20:00	FAULT_XID	RO	0x000	XID.
19:08	FAULT_ROUTEID	RO	0x000	Route ID.
7:00	FAULT_PRIVID	RO	0x00	Privilege ID.

11.2.3.3.2.97 TOP_AURORA_TX:FAULT_CLEAR

Address offset: 0x0000 1030

Physical address: 0x0306 1030

Instance: TOP_AURORA_TX

Description: Fault Clear register

Copyright © 2025 Texas Instruments Incorporated

Type: WO

Table 11-1114. TOP_AURORA_TX:FAULT_CLEAR

Bits	Field Name	Type	Reset	Description
0	FAULT_CLR	WO	0	Fault clear. Writing a 1 clears the current fault. Writing a 0 has no effect.

11.3 Memory Interfaces

Copyright © 2025 Texas Instruments Incorporated

11.3.1 Quad Serial Peripheral Interface (QSPI)

11.3.1.1 Quad Serial Peripheral Interface Overview 3329
11.3.1.2 QSPI Environment 3330
11.3.1.3 QSPI Functional Description 3331
11.3.1.4 QSPI Registers 3340

Copyright © 2025 Texas Instruments Incorporated

11.3.1.1 Quad Serial Peripheral Interface Overview

The quad serial peripheral interface (QSPI) module is a kind of SPI module that allows single, dual, or quad read access to external SPI devices. This module has a memory mapped register interface, which provides a direct interface for accessing data from external SPI devices and thus simplifying software requirements. The QSPI works as a controller only.

The one QSPI in the device is primarily intended for fast booting from quad-SPI flash memories. Figure 11-173 shows the QSPI module overview.

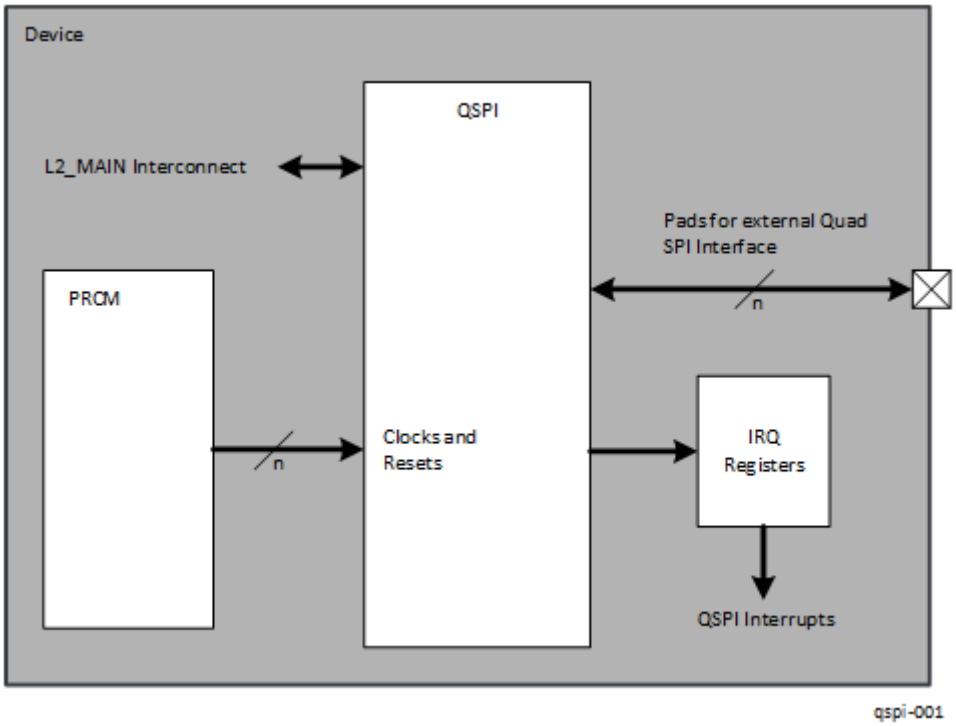

Figure 11-173. QSPI Overview

The QSPI supports the following features:

- General SPI features:
  - Programmable clock divider
  - Max four pin interface
  - Programmable length (from 1 to 128 bits) of the words transferred
  - Programmable number (from 1 to 4096) of the words transferred
  - 1 external chip-select signal
  - Support for 1 pin Write. Dual or quad writes are not supported
  - Support for 1-, 2-, or 4-pin SPI interface
  - Optional interrupt generation on word or frame (number of words) completion
  - Programmable delay between chip select activation and output data from 0 to 3 QSPI clock cycles
  - Programmable signal polarities
  - Programmable active clock edge
  - Software-controllable interface allowing for any type of SPI transfer
  - Control through L2_MAIN configuration port
- Serial flash interface (SFI) features:
  - Serial flash read/write interface
  - Additional registers for defining read and write commands to the external serial flash device
  - External flash support of up to 8 MB

Copyright © 2025 Texas Instruments Incorporated

- Fast read support, where fast read requires dummy bytes after address bytes; 0 to 3 dummy bytes can be configured.
- Dual read support
- Quad read support
- Little-endian support (only for memory mapped registers used to configure QSPI controller and not SPI content accesses)
- Linear increment addressing mode only

The QSPI supports only dual and quad reads. Dual or quad writes are not supported. In addition, there is no "pass through" mode supported where the data present on the QSPI input is sent to its output.

Note

The QSPI module does not support cache line wrap mode.

Note

QSPI supports downloading and booting SBL from QSPI flash, but eXecute-In-Place (XIP) and other QSPI boot options are **not** supported.

11.3.1.2 QSPI Environment

Figure 11-174 shows a typical connection of the QSPI module to the external quad-SPI flash memory.

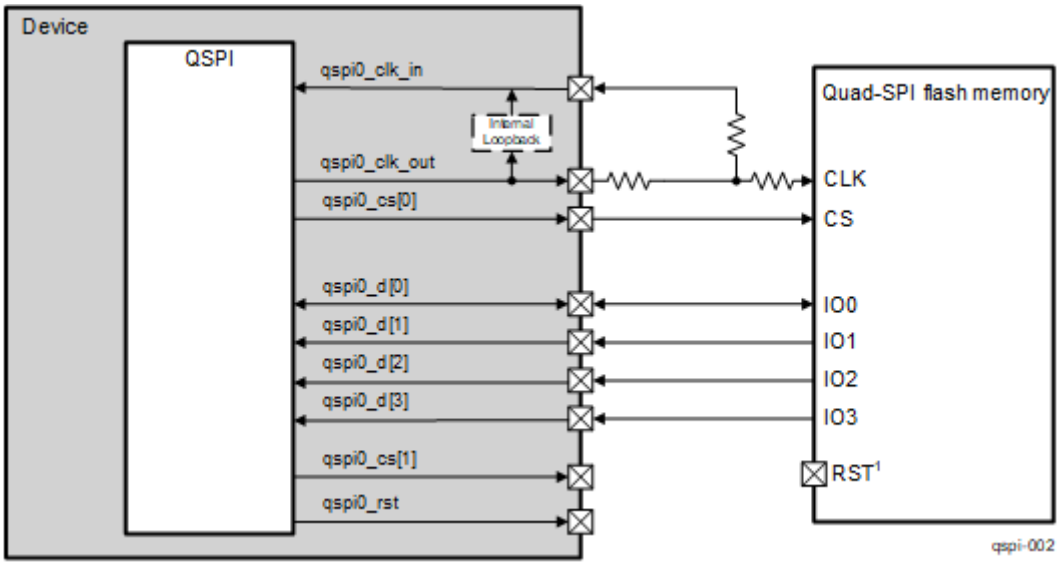

Figure 11-174. QSPI Connected to an External Quad-SPI Flash Memory

1. External flash memories that are larger than 128 Mb require an external reset pin for correct operation after SoC PORz reset. This reset must be triggered upon board reset to ensure the flash is in the correct state upon boot.

Table 11-1115 lists and describes the QSPI I/O signals.

Table 11-1115. QSPI I/O Signals

QSPI Signal/Pad name	I/O(1)	Description					
		3-pin(2) SPI Read (Single Read)	3-pin(2) SPI Write (Single Write)	4-pin(2) SPI Read (Single Read)	4-pin(2) SPI Write (Single Write)	4-pin(2) SPI Read (Dual Read)	6-pin(2) SPI Read (Quad Read)
qspi0_d[0]	IO	Used as SPI data input	Used as SPI data output	Not used	Used as SPI data output	Used as SPI data input 0	Used as SPI data input 0
qspi0_d[1]	I	Not used	Not used	Used as SPI data input	Not used	Used as SPI data input 1	Used as SPI data input 1

Copyright © 2025 Texas Instruments Incorporated

Table 11-1115. QSPI I/O Signals (continued)

QSPI Signal/Pad name	I/O[1]	Description					
		3-pin[2] SPI Read (Single Read)	3-pin[2] SPI Write (Single Write)	4-pin[2] SPI Read (Single Read)	4-pin[2] SPI Write (Single Write)	4-pin[2] SPI Read (Dual Read)	6-pin[2] SPI Read (Quad Read)
qspi0_d[2]	I	Not used	Not used	Not used	Not used	Not used	Used as SPI data input 2
qspi0_d[3]	I	Not used	Not used	Not used	Not used	Not used	Used as SPI data input 3
qspi0_sclk	O	Clock for the external SPI device					
qspi0_cs[0]	O	External SPI device chip-select 0					
qspi0_rtclk	I	The qspi0_sclk output must be connected to the qspi0_rtclk input, and is used for controlling the timing of the read return data when the QSPI module operates in Mode 0. In case Mode 3 is used, there is no need to connect the qspi0_sclk to the qspi0_rtclk.					

(1) I = Input; O = Output
(2) This is the pin count at the SPI flash memory side. The pin count at the device side is increased by one because of the qspi0_rtclk signal. References to the pin count throughout this chapter consider the pin count at the SPI flash memory side.

Note

To ensure proper timing, precise layout and routing requirements must be followed. For layout and routing requirements for all QSPI signals, see section “PCB Guidelines” of the device Data Manual.

11.3.1.3 QSPI Functional Description

11.3.1.3.1 QSPI Block Diagram

Initial device boot from external SPI flash memory can be accomplished through the QSPI module. The interface is a simple 4-wire SPI used for control or data transfers. The QSPI also supports a 3-wire SPI protocol where the qspi0_d[0] signal is used as a bidirectional for reads and writes. In addition, a 6-wire mode can be used to support quad read devices. Figure 11-175 shows the QSPI block diagram.

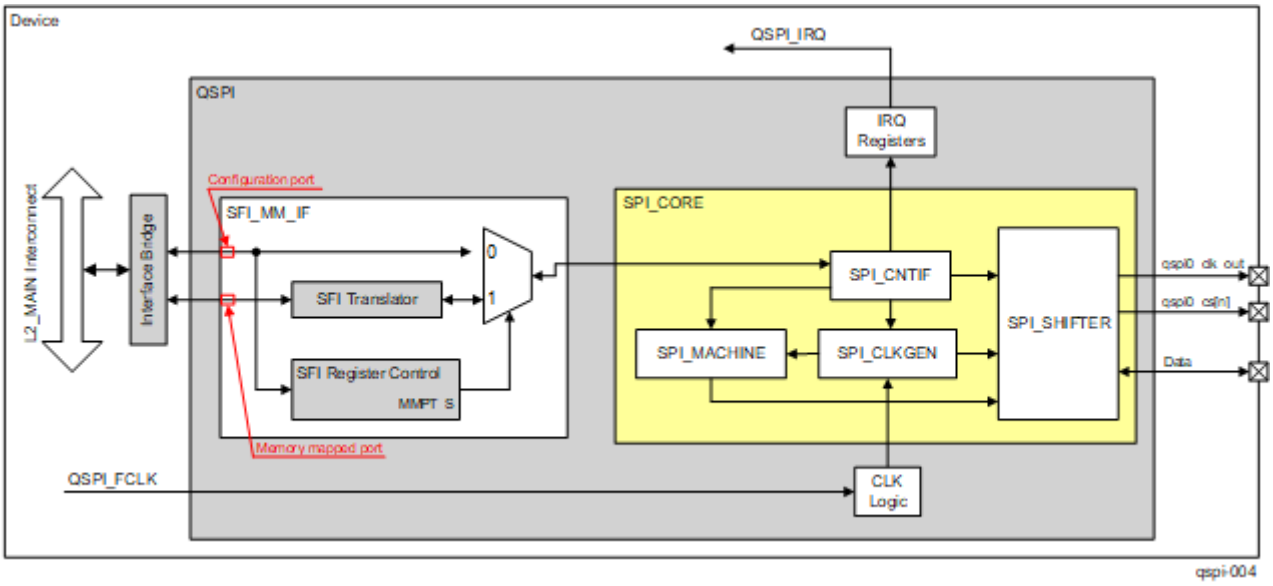

Figure 11-175. QSPI Block Diagram

The QSPI is composed of two blocks. The first one is the SFI memory-mapped interface (SFI_MM_IF) and the second one is the SPI core (SPI_CORE). The SFI_MM_IF block is associated only with SPI flash memories and is used for specifying typical for the SPI flash memories settings (read or write command, number of address and dummy bytes, and so on) unlike the SPI_CORE block, which is associated with the SPI interface itself and

Copyright © 2025 Texas Instruments Incorporated

is used to configure typical SPI settings (chip-select polarity, serial clock inactive state, SPI clock mode, length of the words transferred, and so on).

The SFI_MM_IF comprises the following two subblocks:
- SFI register control
- SFI translator

The SPI_CORE comprises the following four subblocks:
- SPI control interface (SPI_CNTIF)
- SPI clock generator (SPI_CLKGEN)
- SPI control state machine (SPI_MACHINE)
- SPI data shifter (SPI_SHIFTER)

In addition, an interface bridge connects the two ports (configuration port and memory-mapped port) of the SFI_MM_IF block to the L2_MAIN interconnect. There are no software controls associated with this interface bridge.

The QSPI supports long transfers through a frame-style sequence. In its generic SPI use mode, a word can be defined up to 128 bits and multiple words can be transferred during a single access. For each word, a device initiator must read or write the new data and then tell the QSPI to continue the current operation. Using this sequence, a maximum of 4096 128-bit words can be transferred in a single SPI read or write operation. This allows great flexibility when connecting the QSPI to various types of devices.

As opposed to the generic SPI use mode, the communication with serial flash-type devices requires sending a byte command, followed by sending bytes of data. Commands can be sent through the SPI_CORE block to communicate with a serial flash device; however, it is easier to do this using the SFI_MM_IF block because it is intended to ease the communication with serial flash devices. If the SPI_CORE is used to communicate with a serial flash device, software must load the command into the SPI data transfer register with additional configuration fields, perform the byte transfer, then place the data to be sent (or configure for receive) along with additional configuration fields, and perform that transfer. Reads and writes to serial flash devices are more specific. First, the read or write command byte is sent, followed by 1 to 4 bytes of address (corresponding to the address to read/write), then followed by the data write/receive phase. Data is always sent byte oriented. When the address is loaded, data can be continuously read or written, and the address will automatically increment to each byte address internally to the serial flash device.

Note

The SFI_MM_IF block only allows reading and writing to an externally connected SPI flash device. The SFI_MM_IF block does not allow reads or writes to internal configuration and status registers of the SPI flash device. These registers must be accessed through the features of the SPI_CORE block.

11.3.1.3.1.1 SFI Register Control

The SFI register control block consists of the following five configuration registers:
- QSPI_SPI_SETUP0_REG
- QSPI_SPI_SETUP1_REG
- QSPI_SPI_SETUP2_REG
- QSPI_SPI_SETUP3_REG
- QSPI_SPI_SWITCH_REG

The first four registers let the user define the following:
- Byte command for a serial flash read specified by the QSPI_SPI_SETUPi_REG[7:0] RCMD bit field
- Byte command for a serial flash write specified by the QSPI_SPI_SETUPi_REG[23:16] WCMD bit field
- Number of address bytes required for the particular type of serial flash specified by the QSPI_SPI_SETUPi_REG[9:8] NUM_A_BYTES bit field
- Number of “dummy bytes” that may be needed to support the fast read mode function of some serial flash devices. The QSPI_SPI_SETUPi_REG[11:10] NUM_D_BYTES bit field specifies the number of "dummy

Copyright © 2025 Texas Instruments Incorporated

bits." In addition, the QSPI_SPI_SETUPi_REG[28:24] NUM_D_BITS bit field can also specify the number of "dummy bits."
- Whether the read command is single (normal), dual, or quad read mode command. This is specified by the QSPI_SPI_SETUPi_REG[13:12] READ_TYPE bit field.
- i is equal to 0, 1, 2 and 3 and means that the QSPI_SPI_SETUPi_REG registers are associated with each of the four supported chip-selects [that is, four supported output SPI flash devices])

The QSPI_SPI_SWITCH_REG register acts as a static switch which allows the configuration port (shown in Figure 11-175) to connect directly to the SPI_CORE block, or allows the memory-mapped port (also shown in Figure 11-175) to connect to the SPI_CORE block. This is done using the QSPI_SPI_SWITCH_REG[0] MMPT_S bit.

In addition, the QSPI_SPI_SWITCH_REG[1] MM_INT_EN bit is used to enable or disable the word complete interrupt during operations using the memory-mapped port.

11.3.1.3.1.2 SFI Translator

The SFI translator block represents an FSM which, based on the configuration information loaded into the SFI register control block, converts each input read/write sequence into an SPI_CORE configuration sequence for access to the external serial flash memory.

A read sequence is converted into the following actions:
1. SPI chip-select goes active.
2. Read command byte is issued.
3. 1 to 4 address bytes, which correspond to the first address supplied, are issued.
4. 0 to 3 dummy bytes are issued, if “fast read” is supported.
5. Data bytes are read from the external SPI flash memory.
6. SPI chip-select goes inactive.

For linear addressing mode, action 5 is repeated until the byte count to be transferred reaches zero.

A write sequence is identical to a read sequence, except that a write sequence does not use dummy bytes.

Another important aspect with regard to writes is that a serial flash memory location can only be written to if the bits are erased in advance. Erased means the bits are set to 1. This means that writing only changes 1 contents to 0. It is not possible with this write to change the contents of a bit from 0 to 1. An erase command must be performed to do this operation. Erase commands cannot be executed on single byte locations. Depending on device types, there are page, block, and chip erase commands. To perform an erase command, the particular command must be sent over the SPI bus, and an internal register of the serial flash device must then be polled to determine when the erase completes. The erases must be done through the configuration port by software before performing any writes through the memory-mapped port. This means that writes are passed through to the serial flash device, but if the memory locations being modified are not properly erased before the write, the contents may not result in what was sent.

Note

The input to the SFI Memory Mapped Protocol Translator is 23 address lines. Therefore, the SFI mode of operation supports external flash size of up to 8MB

11.3.1.3.1.3 SPI Control Interface

The SPI control interface contains configuration registers used to configure the SPI core functionality of the QSPI. This block maintains all configuration settings for the SPI core (that is, settings specific for the SPI interface itself but not for the SPI flash memories).

The registers defined for this block are:
- The QSPI_PID register, which is read only and contains QSPI revision associated information
- The QSPI_SPI_CLOCK_CNTRL_REG register, which is used to control external SPI clock (qspi0_sclk)

Copyright © 2025 Texas Instruments Incorporated

- The QSPI_SPI_DC_REG register used to define the SPI clock mode and chip-select polarity for the four external SPI devices
- The QSPI_SPI_CMD_REG register used to control the operation of the SPI command. This register is also used to configure and transfer data.
- Four data registers used for reading the data received and for writing the data to be transferred. These registers are:
  - QSPI_SPI_DATA_REG
  - QSPI_SPI_DATA_REG_1
  - QSPI_SPI_DATA_REG_2
  - QSPI_SPI_DATA_REG_3

  These four registers compose a 128-bit shift register.
- The QSPI_SPI_STATUS_REG register, which contains status information

All of these registers can only be written if the QSPI is not busy. This means that they can be written if the QSPI_SPI_STATUS_REG[0] BUSY bit is 0x0. The QSPI becomes busy when a write to the QSPI_SPI_CMD_REG[18:16] CMD bit field is performed. Writing to this bit field starts an SPI transaction and sets the QSPI_SPI_STATUS_REG[0] BUSY bit to 0x1. The CMD bit field can be written again when the BUSY bit is 0x0. In addition, the start of the SPI transaction is synchronized to the qspi0_sclk clock and clearing of the BUSY bit is synchronized to the QSPI_FCLK clock.

The register group QSPI_SPI_DATA_REG_3, QSPI_SPI_DATA_REG_2, QSPI_SPI_DATA_REG_1 and QSPI_SPI_DATA_REG is treated as a single 128-bit word for shifting data in and out. The QSPI_SPI_DATA_REG_3 register is used for the most significant bits and the QSPI_SPI_DATA_REG is used for the least significant bits.This applies for both reads and writes. For example, after reading a 128-bit word (WLEN = 0x7F) the most significant bit of the data read, that is bit 127, will be located at QSPI_SPI_DATA_REG_3[31] position and the least significant bit, that is bit 0 of the data read, will be located at the QSPI_SPI_DATA_REG[0] position.

The data written to this register group should be right justified so that a data pre-shifting is not required. The QSPI_SPI_CMD_REG[25:19] WLEN bit field determines the location of the most significant bit and the bit position that will be shifted out first during a write. In order to shift out byte data the WLEN bit field should be set to 0x7 and the data byte should be written to the lower byte of the QSPI_SPI_DATA_REG register. By setting the word length to 0x7 the QSPI_SPI_DATA_REG register will look like a pseudo 8-bit shift register. When the user wants to write 40-bit long word the WLEN bit field should be set to 0x27, the 32 least significant bits of data should be written to the QSPI_SPI_DATA_REG and the rest 8 most significant bits of data should be written to the lower byte of the QSPI_SPI_DATA_REG_1 register. By setting WLEN to 0x27 these two registers will look like a pseudo 40-bit shift register. When the word length is greater than 64 bits the QSPI_SPI_DATA_REG_2 register is also used and the previosly described logic applies. The QSPI_SPI_DATA_REG_3 register is used together with the other three data registers when the word length is greater than 96 bits.

When dual or quad read mode is used the number of the words transferred must be even. This number is configured through the QSPI_SPI_CMD_REG[11:0] FLEN bit field.

Note

The QSPI module does not support a "pass through" mode where the data present on qspi0_d[1] is sent to qspi0_d[0], when 4-pin non-dual read mode is used. This means that setting the QSPI_SPI_CMD_REG[18:16] CMD bit field to 0x1 causes the QSPI only to read from an external device using the qspi0_d[1] pad as an input and if a write to the same external device is desired, the CMD bit field should be set to 0x2, which causes the qspi0_d[0] pad to be used as an output.

11.3.1.3.1.4 SPI Clock Generator

The SPI clock generator uses the QSPI_FCLK clock as an input, and generates the qspi0_sclk, which is a divided version of the QSPI_FCLK clock. The divide ratio is a 16-bit value configured through the QSPI_SPI_CLOCK_CNTRL_REG[15:0] DCLK_DIV bit field and thus provides a division factor in a range from

Copyright © 2025 Texas Instruments Incorporated

1 to 65536. The QSPI_FCLK clock is divided by the DCLK_DIV value + 1 to provide the qspi0_sclk clock. When DCLK_DIV = 0x0 the QSPI_FCLK clock equals the DCLK clock. The value in the DCLK_DIV bit field applies only when the QSPI_SPI_CLOCK_CNTRL_REG[31] CLKEN bit is set to 0x1. Figure 11-176 shows the SPI_CLKGEN block.

If the CLKEN bit is 0x0 the command specified in the QSPI_SPI_CMD_REG[18:16] CMD bit field is not executed and the QSPI_SPI_STATUS_REG[0] BUSY bit is not set. The command is executed only if the CLKEN bit is 0x1 before write to the CMD bit field.

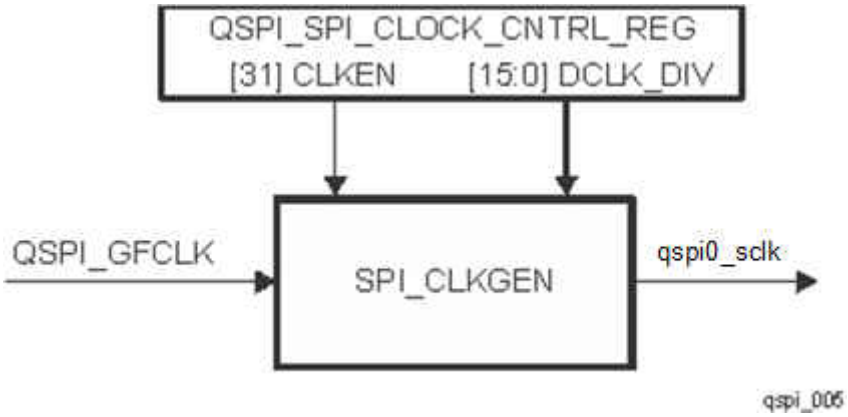

Figure 11-176. SPI_CLKGEN Block

11.3.1.3.1.5 SPI Control State-Machine

The SPI control state-machine (SPI_MACHINE) manages the operation of the SPI_CORE block. SPI_MACHINE takes control and configuration information from the registers in the SPI_CNTIF block as input and provides control information to the SPI data shifter. This information is used to control the SPI data port. The SPI_MACHINE also generates status information, which is sent back to the SPI_CNTIF block.

Writing a valid value to the QSPI_SPI_CMD_REG[18:16] CMD bit field sets immediately the QSPI_SPI_STATUS_REG[0] BUSY bit to 0x1, activates the corresponding qspi0_cs[n] (n = 0 to 1) and starts the SPI data transaction. The BUSY bit is cleared automatically when QSPI_SPI_CMD_REG[25:19] WLEN number of bits are shifted in or out. If the value of the QSPI_SPI_STATUS_REG®[27:16] WDCNT bit field is different than 0x0 and WLEN number of bits are shifted already, the SPI_MACHINE waits until another write to the CMD bit field is performed. If the command written to the CMD bit field is valid, then this increments the value of the WDCNT bit field from 0x0 and starts shifting data in or out again. This is repeated until the WDCNT bit field reaches the frame length (QSPI_SPI_CMD_REG[11:0] FLEN), that is, all words of the frame are shifted or till earlier frame termination occurs. While the SPI_MACHINE is waiting for write to the CMD bit field the corresponding qspi0_cs[n] (n = 0 to 1) remains active and the BUSY flag is set to 0x0. In addition, the bit length for each word can be changed during a frame from 1 to 128 bits using the QSPI_SPI_CMD_REG[25:19] WLEN bit field.

The SPI_MACHINE also provides a mechanism to terminate the frame earlier. This is done by writing an invalid command to the CMD bit field. An invalid command corresponds to the 0x0 and 0x4 (reserved) values of the CMD bit field. Writing one of these values when the the WDCNT bit field is not equal to 0x0 and when the BUSY flag is 0x0 terminates the frame earlier.

The corresponding qspi0_cs[n] (n = 0 to 1) becomes inactive when all words are shifted or when the frame terminates earlier.

11.3.1.3.1.6 SPI Data Shifter

The SPI data shifter handles the capture and generation of the SPI interface signals. Based on control signals from the SPI_MACHINE and SPI_CNTIF blocks, data is shifted in or out on falling or rising edge of qspi0_sclk

Copyright © 2025 Texas Instruments Incorporated

clock depending on the SPI clock mode selected. Table 11-1116 lists the four defined clock modes of operation for the QSPI.

Table 11-1116. SPI Clock Modes Definition

Mode	Settings in the QSPI_SPI_DC_REG Register		Description
	Value of the CKP bits	Value of the CKPH bits	
0	0	0	Data input captured on falling edge of qspi0_sclk clock. Data output generated on falling edge of qspi0_sclk clock
1	0	1	Data input captured on rising edge of qspi0_sclk clock. Data output generated on rising edge of qspi0_sclk clock
2	1	0	Data input captured on rising edge of qspi0_sclk clock. Data output generated on rising edge of qspi0_sclk clock
3	1	1	Data input captured on falling edge of qspi0_sclk clock. Data output generated on falling edge of qspi0_sclk clock

Note

Mode 1 and Mode 2 are not supported and should not be used.

The CKPi and CKPHi (i = 0 to 3) bits of the QSPI_SPI_DC_REG register control the clock modes. Each of these 4 bits corresponds to an output chip select.

Figure 11-177 shows all four clock modes. In addition, through the DDi (i = 0 to 3) bits of the QSPI_SPI_DC_REG register the data can be delayed from one to three qspi0_sclk clock cycles after the corresponding qspi0_cs[n] (n = 0 to 1) goes active. The active state of each chip-select can also be controlled through the CSPi (i = 0 to 3) bits of the QSPI_SPI_DC_REG register.

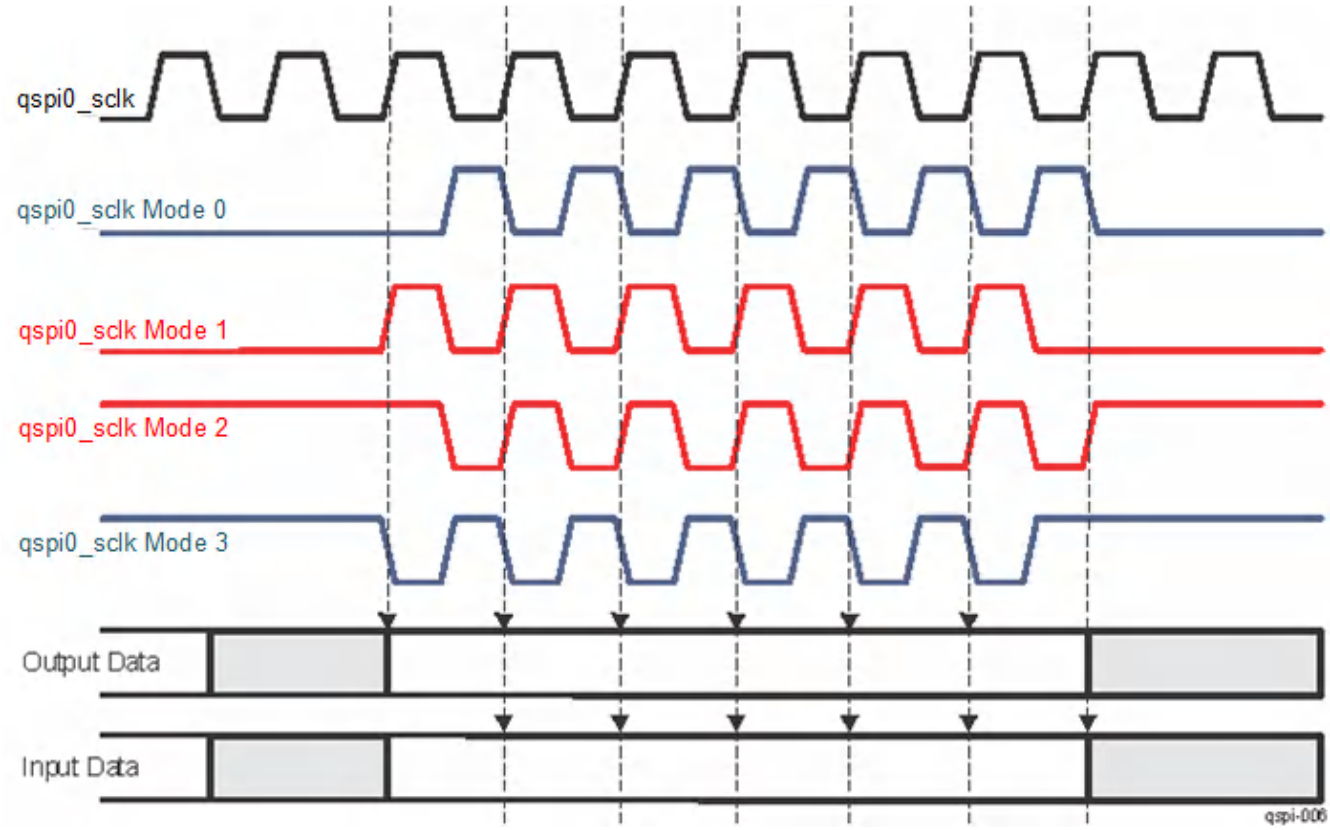

Figure 11-177. SPI Clock Modes

Copyright © 2025 Texas Instruments Incorporated

11.3.1.3.2 QSPI Clock Configuration

The QSPI complies with the PRCM peripheral-idle protocol. The QSPI_FCLK clock is gated based on the values loaded in the QSPI_SYSCONFIG[3:2] IDLE_MODE bit field. Three modes are supported:

- Force-idle: The QSPI_FCLK clock is gated unconditionally by the QSPI.
- No-idle: The QSPI_FCLK clock is never gated by the QSPI.
- Smart-idle: The QSPI_FCLK clock is gated by the QSPI, depending on its internal requirements.

11.3.1.3.3 QSPI Interrupt Requests

Figure 11-178 shows a logical representation of the QSPI interrupt generation scheme.

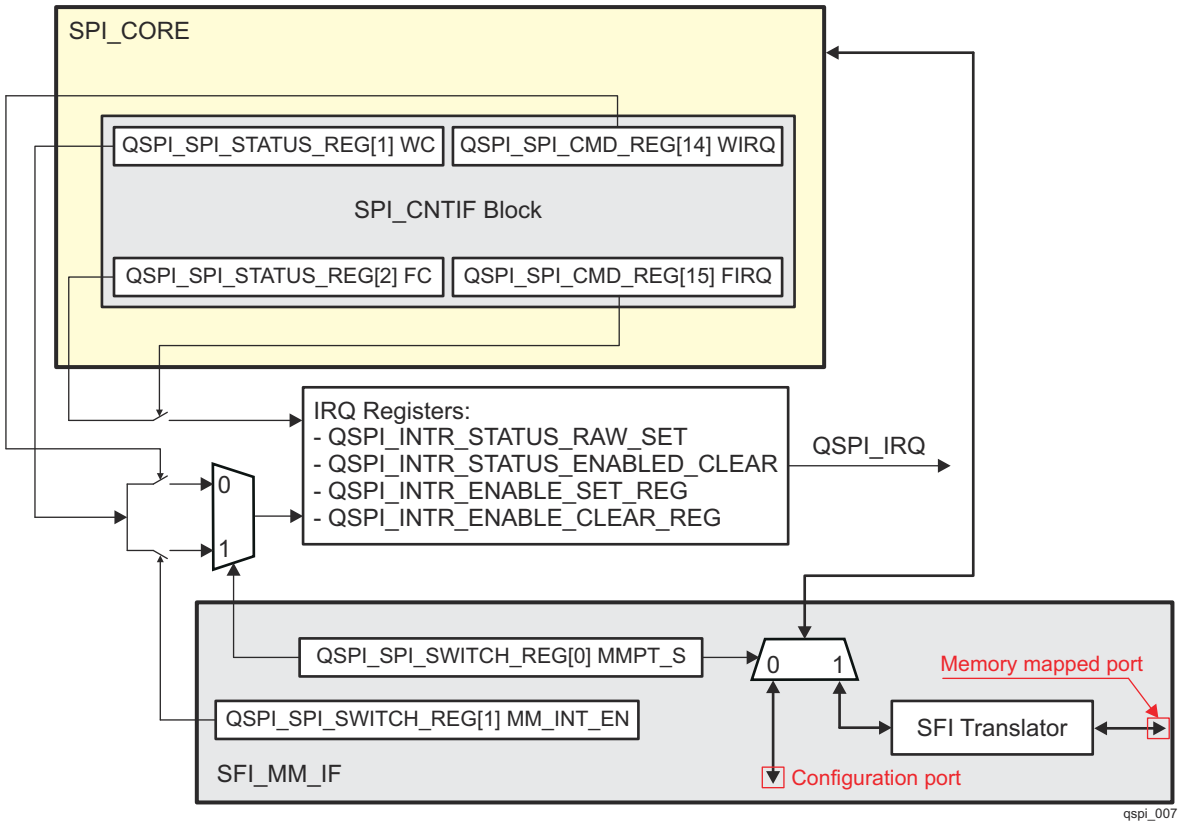

Figure 11-178. Logical Representation of the QSPI Interrupt Generation Scheme

QSPI_SPI_STATUS_REG[1] WC and QSPI_SPI_STATUS_REG[2] FC are status bits indicating whether word or frame transfer is complete. Setting the corresponding interrupt enable bit (WIRQ or FIRQ) in the QSPI_SPI_CMD_REG register allows these events (WC and FC) to generate an interrupt. The WC and FC bits are reset every time the user writes to the QSPI_SPI_CMD_REG register or reads the QSPI_SPI_STATUS_REG register. This is done to keep control parameters from changing the interface protocol signals while a transfer is in progress. Additionally, the QSPI_SPI_SWITCH_REG[1] MM_INT_EN bit is used to enable or disable the word complete interrupt during operations using the memory-mapped port.

When the QSPI_SPI_CMD_REG[14] WIRQ and QSPI_SPI_CMD_REG[15] FIRQ bits are set to 0x1 the following applies:

- The QSPI activates its interrupt line only if the interrupts are enabled by setting to 0x1 the corresponding bits in the QSPI_INTR_ENABLE_SET_REG register. These interrupts can be disabled by setting the corresponding bits in the QSPI_INTR_ENABLE_CLEAR_REG register to 0x1.
- After an interrupt has been serviced, software must clear the corresponding status flag. This is done by setting the corresponding bit in the QSPI_INTR_STATUS_ENABLED_CLEAR register to 0x1, which also clears the corresponding bit in the QSPI_INTR_STATUS_RAW_SET register. The status flags in the

Copyright © 2025 Texas Instruments Incorporated

QSPI_INTR_STATUS_RAW_SET register are set even if the corresponding interrupt is disabled unlike those in the QSPI_INTR_STATUS_ENABLED_CLEAR register, which are set only if the corresponding interrupt is enabled.

- The QSPI also generates an interrupt if a certain bit in the QSPI_INTR_STATUS_RAW_SET register is set to 0x1 and the corresponding interrupt is enabled through the QSPI_INTR_ENABLE_SET_REG register. This feature is useful during user software debugging. In addition, even if interrupts are not enabled a corresponding raw flag in the QSPI_INTR_STATUS_RAW_SET register is set to 0x1 when an IRQ condition occurs.
- Even if interrupts are not enabled, a certain status bit in the QSPI_INTR_STATUS_RAW_SET register can also be cleared by setting to 0x1 the corresponding bit in the QSPI_INTR_STATUS_ENABLED_CLEAR register.

It must be considered that the previously described scenario applies if the QSPI_SPI_CMD_REG[14] WIRQ and QSPI_SPI_CMD_REG[15] FIRQ bits are set to 0x1.

Note

The QSPI_IRQ interrupt line is activated only if at least one of the following conditions is met:

- The word complete interrupt is enabled:
  - during operations using the memory-mapped port by setting to 0x1 both the QSPI_SPI_SWITCH_REG[1] MM_INT_EN and QSPI_INTR_ENABLE_SET_REG[1] WIRQ_ENA_SET bits.
  - during operations using the configuration port by setting to 0x1 both the QSPI_SPI_CMD_REG[14] WIRQ and QSPI_INTR_ENABLE_SET_REG[1] WIRQ_ENA_SET bits.
- The frame complete interrupt is enabled setting to 0x1 both the QSPI_SPI_CMD_REG[15] FIRQ and QSPI_INTR_ENABLE_SET_REG[0] FIRQ_ENA_SET bits.

The QSPI_IRQ interrupt line is also activated when both the conditions are met.

Table 11-1117 lists the event flags and the corresponding mask bits of the sources which can cause interrupts.

Table 11-1117. QSPI Events

Event Flag	Event Mask	Description
QSPI_INTR_STATUS_RAW_SET[1] WIRQ_RAW QSPI_INTR_STATUS_ENABLED_CLEAR[1] WIRQ_ENA QSPI_SPI_STATUS_REG[1] WC	QSPI_INTR_ENABLE_SET_REG[1] WIRQ_ENA_SET QSPI_INTR_ENABLE_CLEAR_REG[1] WIRQ_ENA_CLR QSPI_SPI_CMD_REG[14] WIRQ	Word complete interrupt event. Asserted each time after a word is transferred or received.
QSPI_INTR_STATUS_RAW_SET[0] FIRQ_RAW QSPI_INTR_STATUS_ENABLED_CLEAR[0] FIRQ_ENA QSPI_SPI_STATUS_REG[2] FC	QSPI_INTR_ENABLE_SET_REG[0] FIRQ_ENA_SET QSPI_INTR_ENABLE_CLEAR_REG[0] FIRQ_ENA_CLR QSPI_SPI_CMD_REG[15] FIRQ	Frame complete interrupt event. Asserted each time after a frame is transferred or received.

Note

QSPI_IRQ can also be used to trigger DMA events

11.3.1.3.4 QSPI Memory Regions

Two memory regions are associated with the QSPI. The first memory region is dedicated to the configuration port. Using this memory region, all internal registers can be programmed and serial transfers made from the supported external SPI devices. The L2_MAIN start address at which the configuration port is available is 0x4820 0000. The second memory region is associated mainly with the memory-mapped port and is used for

Copyright © 2025 Texas Instruments Incorporated

communication directly with one of the two supported external SPI devices. The memory region for device 1 starts at 0x6000 0000 and the memory region for device 2 starts at 0x6200 0000

It is important to keep in mind that the configuration port provides an access to all the QSPI registers listed in the register summary. These are configuration registers and also four data registers. The configuration registers are used to configure typical SPI and serial flash memory settings and the four data registers are used for read and write operations. When communicating with an external SPI device (but not an SPI flash memory) the SPI_CORE module should be used and the data exchanged is available thorough these four data registers, which can be accessed only through the configuration port.

Copyright © 2025 Texas Instruments Incorporated

11.3.1.4 QSPI Registers

11.3.1.4.1 QSPI Register Summary

Table 11-1118. QSPI Registers Mapping Summary

Register Name	Type	Register Width (Bits)	Address Offset
QSPI_PID	R	32	0x0000 0000
QSPI_SYSCONFIG	RW	32	0x0000 0010
QSPI_INTR_STATUS_RAW_SET	RW	32	0x0000 0020
QSPI_INTR_STATUS_ENABLED_CLEAR	RW	32	0x0000 0024
QSPI_INTR_ENABLE_SET_REG	RW	32	0x0000 0028
QSPI_INTR_ENABLE_CLEAR_REG	RW	32	0x0000 002C
QSPI_INTC_EOI_REG	RW	32	0x0000 0030
QSPI_SPI_CLOCK_CNTRL_REG	RW	32	0x0000 0040
QSPI_SPI_DC_REG	RW	32	0x0000 0044
QSPI_SPI_CMD_REG	RW	32	0x0000 0048
QSPI_SPI_STATUS_REG	R	32	0x0000 004C
QSPI_SPI_DATA_REG	RW	32	0x0000 0050
QSPI_SPI_SETUP0_REG	RW	32	0x0000 0054
QSPI_SPI_SETUP1_REG	RW	32	0x0000 0058
QSPI_SPI_SETUP2_REG	RW	32	0x0000 005C
QSPI_SPI_SETUP3_REG	RW	32	0x0000 0060
QSPI_SPI_SWITCH_REG	RW	32	0x0000 0064
QSPI_SPI_DATA_REG_1	RW	32	0x0000 0068
QSPI_SPI_DATA_REG_2	RW	32	0x0000 006C
QSPI_SPI_DATA_REG_3	RW	32	0x0000 0070

11.3.1.4.2 QSPI Register Description

Table 11-1119. QSPI_PID

Address Offset	0x0000 0000
Description	Revision register
Type	R

31	30	29	28	27	26	25	24	23	22	21	20	19	18	17	16	15	14	13	12	11	10	9	8	7	6	5	4	3	2	1	0
REVISION																															

Bits	Field Name	Description	Type	Reset
31:0	REVISION	IP Revision	R	TI Internal data

Table 11-1120. QSPI_SYSCONFIG

Address Offset	0x0000 0010
Description	
Type	RW

31	30	29	28	27	26	25	24	23	22	21	20	19	18	17	16	15	14	13	12	11	10	9	8	7	6	5	4	3	2	1	0
RESERVED																												IDLE_MODE		RESERVED	

Bits	Field Name	Description	Type	Reset
31:4	RESERVED		R	0x2

Copyright © 2025 Texas Instruments Incorporated

Bits	Field Name	Description	Type	Reset
3:2	IDLE_MODE	Configuration of the local target state management mode. By definition, target can handle read/write transaction as long as it is out of IDLE state. 0x0: Force-idle mode 0x1: No-idle mode 0x2: Smart-idle mode 0x3: Reserved.	RW	0x2
1:0	RESERVED		R	0x0

Table 11-1121. QSPI_INTR_STATUS_RAW_SET

Address Offset	0x0000 0020
Description	This register contains raw interrupt status flags.
Type	RW

31	30	29	28	27	26	25	24	23	22	21	20	19	18	17	16	15	14	13	12	11	10	9	8	7	6	5	4	3	2	1	0
RESERVED																														WIRQ_RAW	FIRQ_RAW

Bits	Field Name	Description	Type	Reset
31:2	RESERVED		RW	0x0
1	WIRQ_RAW	Word Interrupt Status. Read indicates the raw status. Read: 0x0: No interrupt 0x1: Interrupt Write: 0x0: Has no effect 0x1: Sets this raw status bit	RW	0x0
0	FIRQ_RAW	Frame Interrupt Status. Read indicates the raw status. Read: 0x0: No interrupt 0x1: Interrupt Write: 0x0: Has no effect 0x1: Sets this raw status bit	RW	0x0

Table 11-1122. QSPI_INTR_STATUS_ENABLED_CLEAR

Address Offset	0x0000 0024
Description	This register contains status flags of the enabled interrupts.
Type	RW

31	30	29	28	27	26	25	24	23	22	21	20	19	18	17	16	15	14	13	12	11	10	9	8	7	6	5	4	3	2	1	0
RESERVED																														WIRQ_ENA	FIRQ_ENA

Bits	Field Name	Description	Type	Reset
31:2	RESERVED		R	0x0

Copyright © 2025 Texas Instruments Incorporated

Bits	Field Name	Description	Type	Reset
1	WIRQ_ENA	Word Interrupt Enabled Status. Read indicates enabled status. Read: 0x0: No interrupt 0x1: Interrupt Write: 0x0: Has no effect 0x1: Clears the word interrupt status flag. The corresponding raw status flag is also cleared.	RW	0x0
0	FIRQ_ENA	Frame Interrupt Enabled Status. Read indicates enabled status. Read: 0x0: No interrupt 0x1: Interrupt Write: 0x0: Has no effect 0x1: Clears the frame interrupt status flag. The corresponding raw status flag is also cleared.	RW	0x0

Table 11-1123. QSPI_INTR_ENABLE_SET_REG

Address Offset	0x0000 0028
Description	This register enables the interrupts.
Type	RW

31	30	29	28	27	26	25	24	23	22	21	20	19	18	17	16	15	14	13	12	11	10	9	8	7	6	5	4	3	2	1	0
RESERVED																														WIRQ_ENA_SET	FIRQ_ENA_SET

Bits	Field Name	Description	Type	Reset
31:2	RESERVED		R	0x0
1	WIRQ_ENA_SET	Word interrupt enable. Read: 0x0: Word interrupt is disabled 0x1: Word interrupt enabled Write: 0x0: Has no effect 0x1: Enables the word interrupt	RW	0x0
0	FIRQ_ENA_SET	Frame interrupt enable. Read: 0x0: Frame interrupt is disabled 0x1: Frame interrupt is enabled Write: 0x0: Has no effect 0x1: Enables the frame interrupt	RW	0x0

Copyright © 2025 Texas Instruments Incorporated

Table 11-1124. QSPI_INTR_ENABLE_CLEAR_REG

Address Offset	0x0000 002C
Description	This register disables the interrupts.
Type	RW

31	30	29	28	27	26	25	24	23	22	21	20	19	18	17	16	15	14	13	12	11	10	9	8	7	6	5	4	3	2	1	0
RESERVED																														WIRQ_ENA_CLR	FIRQ_ENA_CLR

Bits	Field Name	Description	Type	Reset
31:2	RESERVED		R	0x0
1	WIRQ_ENA_CLR	Word interrupt disable. Read: 0x0: Word interrupt is disabled 0x1: Word interrupt is enabled Write: 0x0: Has no effect 0x1: Clears the word interrupt	RW	0x0
0	FIRQ_ENA_CLR	Frame interrupt disable. Read: 0x0: Frame interrupt is disabled 0x1: Frame interrupt is enabled Write: 0x0: Has no effect 0x1: Clears the frame interrupt	RW	0x0

Table 11-1125. QSPI_INTC_EOI_REG

Address Offset	0x0000 0030
Description	Software End-Of-Interrupt: Allows the generation of further pulses on the interrupt line, if a new interrupt event is pending, when using the pulsed output. Unused when using the level interrupt line (depending on module integration).
Type	RW

31	30	29	28	27	26	25	24	23	22	21	20	19	18	17	16	15	14	13	12	11	10	9	8	7	6	5	4	3	2	1	0
EOI_VECTOR																															

Bits	Field Name	Description	Type	Reset
31:0	EOI_VECTOR	Number associated with the interrupt outputs. There is one interrupt output. Write 0x0 after servicing the interrupt to be able to generate another interrupt if pulse interrupts are used. Any other write value is ignored.	RW	0x0

Table 11-1126. QSPI_SPI_CLOCK_CNTRL_REG

Address Offset	0x0000 0040
Description	This register controls the external SPI clock generation. This register can only be written when the QSPI module is not busy, as identified by the QSPI_SPI_STATUS_REG[0] BUSY bit.

Copyright © 2025 Texas Instruments Incorporated

Table 11-1126. QSPI_SPI_CLOCK_CNTRL_REG (continued)

RW

31	30	29	28	27	26	25	24	23	22	21	20	19	18	17	16	15	14	13	12	11	10	9	8	7	6	5	4	3	2	1	0
CLKEN	RESERVED															DCLK_DIV															

Bits	Field Name	Description	Type	Reset
31	CLKEN	External SPI clock (qspi1_sclk) enable. 0x0: The qspi1_sclk clock is turned off 0x1: The qspi1_sclk clock is enabled	RW	0x0
30:16	RESERVED		R	0x0
15:0	DCLK_DIV	Divide ratio for the external SPI clock (qspi1_sclk)	RW	0x0

Table 11-1127. QSPI_SPI_DC_REG

Address Offset 0x0000 0044

Description This register controls the different modes for each output chip select. This register can only be written when the QSPI module is not busy, as identified by the QSPI_SPI_STATUS_REG[0] BUSY bit.

Type RW

31	30	29	28	27	26	25	24	23	22	21	20	19	18	17	16	15	14	13	12	11	10	9	8	7	6	5	4	3	2	1	0
RESERVED																											DD0			CKPH0	CSP0	CKP0

Bits	Field Name	Description	Type	Reset
31:5	RESERVED		R	0x0
4:3	DD0	Data delay for chip select 0 0x0: Data is output on the same cycle as the qspi1_cs[0] goes active 0x1: Data is output 1 qspi1_sclk cycle after the qspi1_cs[0] goes active 0x2: Data is output 2 qspi1_sclk cycles after the qspi1_cs[0] goes active 0x3: Data is output 3 qspi1_sclk cycles after the qspi1_cs[0] goes active	RW	0x0
2	CKPH0	Clock phase for chip select 0. If CKP0 = 0: 0x0: Data shifted out on falling edge; input on falling edge 0x1: Data shifted out on rising edge; input on rising edge If CKP0 = 1: 0x0: Data shifted out on rising edge; input on rising edge 0x1: Data shifted out on falling edge; input on falling edge	RW	0x0
1	CSP0	Chip select polarity for chip select 0. 0x0: Active low 0x1: Active high	RW	0x0
0	CKP0	Clock polarity for chip select 0. 0x0: When there are no data transfers the qspi1_sclk is '0' 0x1: When there are no data transfers the qspi1_sclk is '1'	RW	0x0

Copyright © 2025 Texas Instruments Incorporated

Table 11-1128. QSPI_SPI_CMD_REG

Address Offset	0x0000 0048
Description	This register sets up the SPI command. This register can only be written when the QSPI module is not busy, as identified by the QSPI_SPI_STATUS_REG[0] BUSY bit.
Type	RW

31	30	29	28	27	26	25	24	23	22	21	20	19	18	17	16	15	14	13	12	11	10	9	8	7	6	5	4	3	2	1	0
RESERVED		CSNUM		RESERVED				WLEN					CMD			FIRQ	WIRQ	RESERVED		FLEN											

Bits	Field Name	Description	Type	Reset
31:30	RESERVED		R	0x0
29:28	CSNUM	Device select. Sets the active chip select for the current transfer. 0x0: Chip Select 0 active 0x1: Chip Select 1 active 0x2: Chip Select 2 active 0x3: Chip Select 3 active	RW	0x0
27:26	RESERVED		R	0x0
25:19	WLEN	Word length. Sets the size of the individual transfers from 1 to 128 bits. When a word length greater than 32 bits is configured, not only the QSPI_SPI_DATA_REG register, but also the QSPI_SPI_DATA_REG_1, QSPI_SPI_DATA_REG_2, QSPI_SPI_DATA_REG_3 are used. One or all of these registers are used depending on the length of words transferred. 0x0: 1 bit 0x1: 2 bits ... 0x7F: 128 bits	RW	0x0
18:16	CMD	Transfer command. 0x0: Reserved 0x1: 4-pin Read Single 0x2: 4-pin Write Single 0x3: 4-pin Read Dual 0x4: Reserved 0x5: 3-pin Read Single 0x6: 3-pin Write Single 0x7: 6-pin Read Quad	RW	0x0
15	FIRQ	Frame complete interrupt enable. 0x0: The interrupt is disabled 0x1: The interrupt is enabled	RW	0x0
14	WIRQ	Word complete interrupt enable 0x0: The interrupt is disabled 0x1: The interrupt is enabled	RW	0x0
13:12	RESERVED		R	0x0

Copyright © 2025 Texas Instruments Incorporated

Bits	Field Name	Description	Type	Reset
11:0	FLEN	Frame Length. 0x0: 1 word 0x1: 2 words ... 0xFFF: 4096 words	RW	0x0

Table 11-1129. QSPI_SPI_STATUS_REG

Address Offset	0x0000 004C
Description	This register contains indicators to allow the user to monitor the progression of a frame transfer. This register can only be written when the QSPI module is not busy, as identified by the QSPI_SPI_STATUS_REG[0] BUSY bit.
Type	R

31	30	29	28	27	26	25	24	23	22	21	20	19	18	17	16	15	14	13	12	11	10	9	8	7	6	5	4	3	2	1	0
RESERVED								WDCNT								RESERVED													FC	WC	BUSY

Bits	Field Name	Description	Type	Reset
31:28	RESERVED		R	0x0
27:16	WDCNT	Word count. This field will reflect the 1-4096 words transferred	R	0x0
15:3	RESERVED		R	0x0
2	FC	Frame complete. This bit is set after the transmision of all the requested words completes. This bit is reset when QSPI_SPI_STATUS_REG register is read. 0x0: Transfer is not complete 0x1: Transfer is complete	R	0x0
1	WC	Word complete. This bit is set after each word transfer completes. This bit is reset when QSPI_SPI_STATUS_REG register is read. 0x0: Word transfer is not complete 0x1: Word transfer is complete	R	0x0
0	BUSY	Busy bit. Active transfer in progress. This bit is only set during an active word transfer. Between words it is cleared. 0x0: Idle 0x1: Busy	R	0x0

Table 11-1130. QSPI_SPI_DATA_REG

Address Offset	0x0000 0050
Description	The data received in this register is shifted to the LSB position and the content of the register is shifted to the left. This register acts as the first 32-bit register of the 128-bit shift in/out register. This register is cleared between reads or writes and can only be written when the QSPI module is not busy, as identified by the QSPI_SPI_STATUS_REG[0] BUSY bit.
Type	RW

31	30	29	28	27	26	25	24	23	22	21	20	19	18	17	16	15	14	13	12	11	10	9	8	7	6	5	4	3	2	1	0
DATA																															

Bits	Field Name	Description	Type	Reset
31:0	DATA	Data register for read and write operations	RW	0x0

Copyright © 2025 Texas Instruments Incorporated

Table 11-1131. QSPI_SPI_SETUP0_REG

Address Offset	0x0000 0054
Description	This register contains the read/write command setup for the memory mapped protocol translator (effecting chip select 0 output). By default (reset), the device uses a write command of 2, read command of 3 and address bytes number of 3. This default covers most of the serial flash devices, but can be changed.
Type	RW

31	30	29	28	27	26	25	24	23	22	21	20	19	18	17	16	15	14	13	12	11	10	9	8	7	6	5	4	3	2	1	0
RESERVED			NUM_D_BITS					WCMD								RESERVED		READ_TYPE		NUM_D_BYTES		NUM_A_BYTES		RCMD							

Bits	Field Name	Description	Type	Reset
31:29	RESERVED		R	0x0
28:24	NUM_D_BITS	Number of dummy bits to use if NUM_D_BYTES = 0x0	RW	0x0
23:16	WCMD	Write command	RW	0x2
15:14	RESERVED		R	0x0
13:12	READ_TYPE	Determines if the read command is a single, dual or quad read mode command. 0x0: Normal read (all data input on qspi1_d[1]) 0x1: Dual read (odd bytes input on qspi1_d[1]; even bytes on qspi1_d[0]) 0x2: Normal read (all data input on qspi1_d[1]) 0x3: Quad read (uses also qspi1_d[2] and qspi1_d[3])	RW	0x0
11:10	NUM_D_BYTES	Number of dummy bytes to be used for fast read. 0x0: No dummy bytes required. Use the value in NUM_D_BITS 0x1: Use 8 bits 0x2: Use 16 bits 0x3: Use 24 bits	RW	0x0
9:8	NUM_A_BYTES	Number of address bytes to be sent. 0x0: 1 byte 0x1: 2 bytes 0x2: 3 bytes 0x3: 4 bytes	RW	0x2
7:0	RCMD	Read Command	RW	0x3

Table 11-1132. QSPI_SPI_SETUP1_REG

Address Offset	0x0000 0058
Description	This register contains the read/write command setup for the memory mapped protocol translator (effecting chip select 1 output). By default (reset), the device uses a write command of 2, read command of 3 and address bytes number of 3. This default covers most of the serial flash devices, but can be changed.
Type	RW

31	30	29	28	27	26	25	24	23	22	21	20	19	18	17	16	15	14	13	12	11	10	9	8	7	6	5	4	3	2	1	0
RESERVED			NUM_D_BITS					WCMD								RESERVED		READ_TYPE		NUM_D_BYTES		NUM_A_BYTES		RCMD							

Bits	Field Name	Description	Type	Reset
31:29	RESERVED		R	0x0
28:24	NUM_D_BITS	Number of dummy bits to use if NUM_D_BYTES = 0x0	RW	0x0

Copyright © 2025 Texas Instruments Incorporated

Bits	Field Name	Description	Type	Reset
23:16	WCMD	Write command	RW	0x2
15:14	RESERVED		R	0x0
13:12	READ_TYPE	Determines if the read command is a single, dual or quad read mode command. 0x0: Normal read (all data input on qspi1_d[1]) 0x1: Dual read (odd bytes input on qspi1_d[1]; even bytes on qspi1_d[0]) 0x2: Normal read (all data input on qspi1_d[1]) 0x3: Quad read (uses also qspi1_d[2] and qspi1_d[3])	RW	0x0
11:10	NUM_D_BYTES	Number of dummy bytes to be used for fast read. 0x0: No dummy bytes required. Use the value in NUM_D_BITS 0x1: Use 8 bits 0x2: Use 16 bits 0x3: Use 24 bits	RW	0x0
9:8	NUM_A_BYTES	Number of address bytes to be sent. 0x0: 1 byte 0x1: 2 bytes 0x2: 3 bytes 0x3: 4 bytes	RW	0x2
7:0	RCMD	Read Command	RW	0x3

Table 11-1133. QSPI_SPI_SETUP2_REG

Address Offset	0x0000 005C
Description	This register contains the read/write command setup for the memory mapped protocol translator (effecting chip select 2 output). By default (reset), the device uses a write command of 2, read command of 3 and address bytes number of 3. This default covers most of the serial flash devices, but can be changed.
Type	RW

31	30	29	28	27	26	25	24	23	22	21	20	19	18	17	16	15	14	13	12	11	10	9	8	7	6	5	4	3	2	1	0
RESERVED			NUM_D_BITS					WCMD								RESERVED		READ_TYPE		NUM_D_BYTES		NUM_A_BYTES		RCMD							

Bits	Field Name	Description	Type	Reset
31:29	RESERVED		R	0x0
28:24	NUM_D_BITS	Number of dummy bits to use if NUM_D_BYTES = 0x0	RW	0x0
23:16	WCMD	Write command	RW	0x2
15:14	RESERVED		R	0x0
13:12	READ_TYPE	Determines if the read command is a single, dual or quad read mode command. 0x0: Normal read (all data input on qspi1_d[1]) 0x1: Dual read (odd bytes input on qspi1_d[1]; even bytes on qspi1_d[0]) 0x2: Normal read (all data input on qspi1_d[1]) 0x3: Quad read (uses also qspi1_d[2] and qspi1_d[3])	RW	0x0

Copyright © 2025 Texas Instruments Incorporated

Bits	Field Name	Description	Type	Reset
11:10	NUM_D_BYTES	Number of dummy bytes to be used for fast read. 0x0: No dummy bytes required. Use the value in NUM_D_BITS 0x1: Use 8 bits 0x2: Use 16 bits 0x3: Use 24 bits	RW	0x0
9:8	NUM_A_BYTES	Number of address bytes to be sent. 0x0: 1 byte 0x1: 2 bytes 0x2: 3 bytes 0x3: 4 bytes	RW	0x2
7:0	RCMD	Read Command	RW	0x3

Table 11-1134. QSPI_SPI_SETUP3_REG

Address Offset	0x0000 0060
Description	This register contains the read/write command setup for the memory mapped protocol translator (effecting chip select 3 output). By default (reset), the device uses a write command of 2, read command of 3 and address bytes number of 3. This default covers most of the serial flash devices, but can be changed.
Type	RW

31	30	29	28	27	26	25	24	23	22	21	20	19	18	17	16	15	14	13	12	11	10	9	8	7	6	5	4	3	2	1	0
RESERVED				NUM_D_BITS				WCMD								RESERVED		READ_TYPE		NUM_D_BYTES		NUM_A_BYTES		RCMD							

Bits	Field Name	Description	Type	Reset
31:29	RESERVED		R	0x0
28:24	NUM_D_BITS	Number of dummy bits to use if NUM_D_BYTES = 0x0	RW	0x0
23:16	WCMD	Write command	RW	0x2
15:14	RESERVED		R	0x0
13:12	READ_TYPE	Determines if the read command is a single, dual or quad read mode command. 0x0: Normal read (all data input on qspi1_d[1]) 0x1: Dual read (odd bytes input on qspi1_d[1]; even bytes on qspi1_d[0]) 0x2: Normal read (all data input on qspi1_d[1]) 0x3: Quad read (uses also qspi1_d[2] and qspi1_d[3])	RW	0x0
11:10	NUM_D_BYTES	Number of dummy bytes to be used for fast read. 0x0: No dummy bytes required. Use the value in NUM_D_BITS 0x1: Use 8 bits 0x2: Use 16 bits 0x3: Use 24 bits	RW	0x0
9:8	NUM_A_BYTES	Number of address bytes to be sent. 0x0: 1 byte 0x1: 2 bytes 0x2: 3 bytes 0x3: 4 bytes	RW	0x2
7:0	RCMD	Read Command	RW	0x3

Copyright © 2025 Texas Instruments Incorporated

Table 11-1135. QSPI_SPI_SWITCH_REG

Address Offset	0x0000 0064
Description	This register allows initiators to switch control of the SPI core port between the configuration port and the SFI translator. In addition, an interrupt enable field is defined which is used to enable or disable word complete interrupt generation in memory mapped mode.
Type	RW

31	30	29	28	27	26	25	24	23	22	21	20	19	18	17	16	15	14	13	12	11	10	9	8	7	6	5	4	3	2	1	0
RESERVED																														MM_INT_EN	MMPT_S

Bits	Field Name	Description	Type	Reset
31:2	RESERVED		R	0x0
1	MM_INT_EN	Memory mapped mode interrupt enable. 0x0: Word complete interrupt is disabled during memory mapped operations 0x1: Word complete interrupt is enabled for memory mapped operations	RW	0x0
0	MMPT_S	MPT select. 0x0: Configuration port is selected to control the SPI_CORE. 0x1: SFI translator is selected to control the SPI_CORE.	RW	0x0

Table 11-1136. QSPI_SPI_DATA_REG_1

Address Offset	0x0000 0068
Description	The data received in this register is shifted to the LSB position and the content of the register is shifted to the left. This register acts as the second 32-bit register of the 128-bit shift in/out register. This register is cleared between reads or writes and can only be written when the QSPI module is not busy, as identified by the QSPI_SPI_STATUS_REG[0] BUSY bit.
Type	RW

31	30	29	28	27	26	25	24	23	22	21	20	19	18	17	16	15	14	13	12	11	10	9	8	7	6	5	4	3	2	1	0
DATA																															

Bits	Field Name	Description	Type	Reset
31:0	DATA	Data register for read and write operations	RW	0x0

Table 11-1137. QSPI_SPI_DATA_REG_2

Address Offset	0x0000 006C
Description	The data received in this register is shifted to the LSB position and the content of the register is shifted to the left. This register acts as the third 32-bit register of the 128-bit shift in/out register. This register is cleared between reads or writes and can only be written when the QSPI module is not busy, as identified by the QSPI_SPI_STATUS_REG[0] BUSY bit.
Type	RW

31	30	29	28	27	26	25	24	23	22	21	20	19	18	17	16	15	14	13	12	11	10	9	8	7	6	5	4	3	2	1	0
DATA																															

Bits	Field Name	Description	Type	Reset
31:0	DATA	Data register for read and write operations	RW	0x0

Copyright © 2025 Texas Instruments Incorporated

Table 11-1138. QSPI_SPI_DATA_REG_3

Address Offset	0x0000 0070
Description	The data received in this register is shifted to the LSB position and the content of the register is shifted to the left. This register acts as the fourth 32-bit register of the 128-bit shift in/out register. This register is cleared between reads or writes and can only be written when the QSPI module is not busy, as identified by the QSPI_SPI_STATUS_REG[0] BUSY bit.
Type	RW

31	30	29	28	27	26	25	24	23	22	21	20	19	18	17	16	15	14	13	12	11	10	9	8	7	6	5	4	3	2	1	0
DATA																															

Bits	Field Name	Description	Type	Reset
31:0	DATA	Data register for read and write operations	RW	0x0

11.4 Industrial and Control Interfaces

11.4.1 Enhanced Capture (eCAP) Module

The enhanced Capture (eCAP) module is essential in systems where accurate timing of external events is important.

11.4.1.1 Introduction....3352
11.4.1.2 Description....3352
11.4.1.3 Capture and APWM Operating Mode....3353
11.4.1.4 Capture Mode Description....3354
11.4.1.5 ECAP Registers....3361
11.4.1.6 Application of the ECAP Module....3377
11.4.1.7 Application of the APWM Mode....3386

Copyright © 2025 Texas Instruments Incorporated

11.4.1.1 Introduction

Uses for eCAP include:

- Speed measurements of rotating machinery (for example, toothed sprockets sensed via Hall sensors)
- Elapsed time measurements between position sensor pulses
- Period and duty cycle measurements of pulse train signals
- Decoding current or voltage amplitude derived from duty cycle encoded current/voltage sensors

The eCAP module described in this guide includes the following features:

- 4-event time-stamp registers (each 32 bits)
- Edge polarity selection for up to four sequenced time-stamp capture events
- Interrupt on either of the four events
- Single shot capture of up to four event time-stamps
- Continuous mode capture of time-stamps in a four-deep circular buffer
- Absolute time-stamp capture
- Difference (Delta) mode time-stamp capture
- All above resources dedicated to a single input pin
- When not used in capture mode, the ECAP module can be configured as a single channel PWM output

Note

eCAP may also be called RCSS_ECAPA.

11.4.1.2 Description

In the context of this chapter, one eCAP channel has the following independent key resources:

- Dedicated input capture pin
- 32-bit time base (counter)
- 4 × 32-bit time-stamp capture registers (CAP1-CAP4)
- 4-stage sequencer (Modulo4 counter) that is synchronized to external events, ECAP pin rising/falling edges
- Independent edge polarity (rising/falling edge) selection for all 4 events
- Input capture signal prescaling (from 2 to 62)
- One-shot compare register (2 bits) to freeze captures after 1 to 4 time-stamp events
- Control for continuous time-stamp captures using a 4-deep circular buffer (CAP1-CAP4) scheme
- Interrupt capabilities on any of the 4 capture events

Copyright © 2025 Texas Instruments Incorporated

11.4.1.3 Capture and APWM Operating Mode

You can use the eCAP module resources to implement a single-channel PWM generator (with 32 bit capabilities) when it is not being used for input captures. The counter operates in count-up mode, providing a time-base for asymmetrical pulse width modulation (PWM) waveforms. The CAP1 and CAP2 registers become the active period and compare registers, respectively, while CAP3 and CAP4 registers become the period and capture shadow registers, respectively. Figure 11-179 is a high-level view of both the capture and auxiliary pulse-width modulator (APWM) modes of operation.

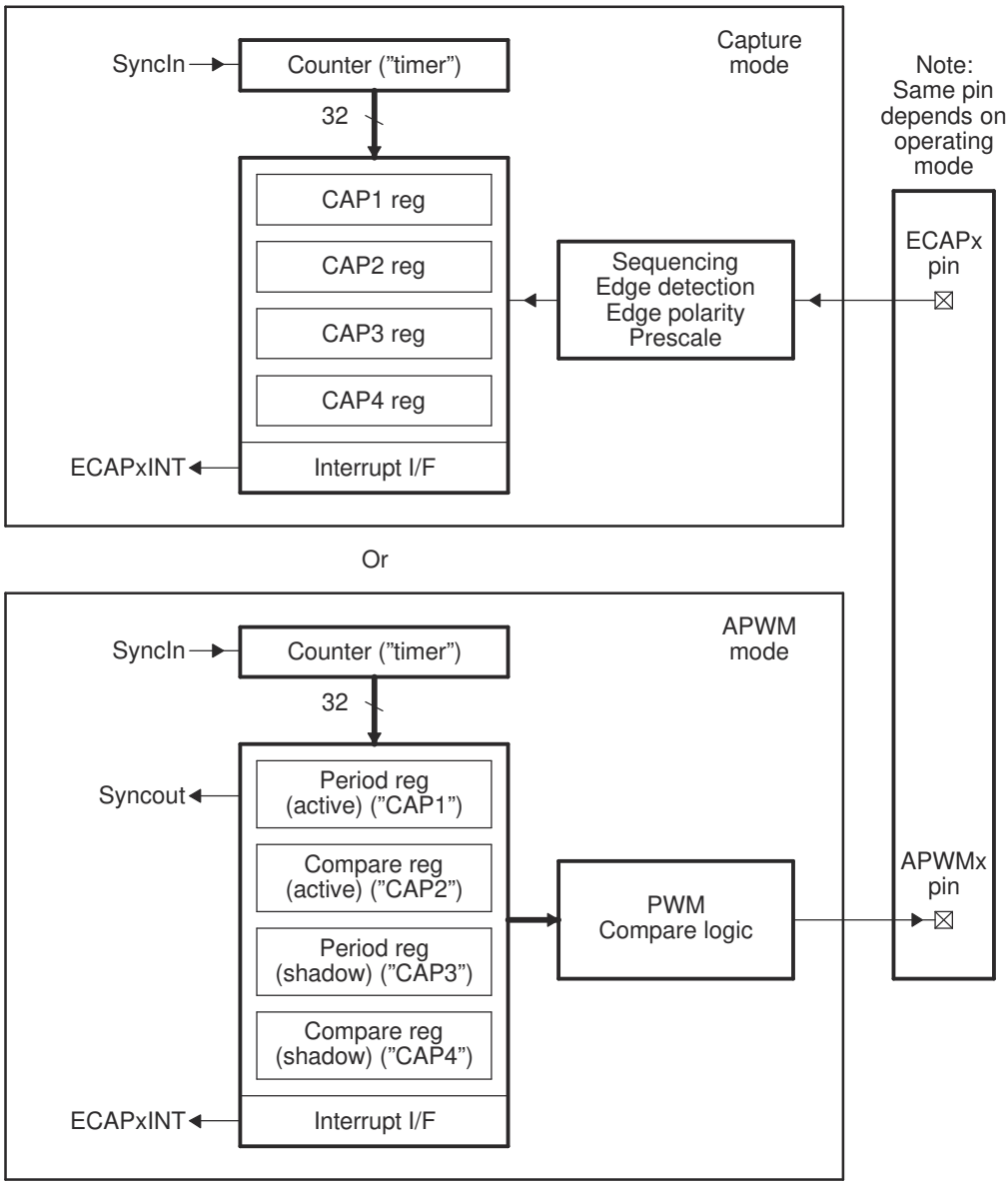

A. A single pin is shared between CAP and APWM functions. In capture mode, it is an input; in APWM mode, it is an output.

B. In APWM mode, writing any value to CAP1/CAP2 active registers also writes the same value to the corresponding shadow registers CAP3/CAP4. This emulates immediate mode. Writing to the shadow registers CAP3/CAP4 invokes the shadow mode.

Figure 11-179. Capture and APWM Modes of Operation

Copyright © 2025 Texas Instruments Incorporated

11.4.1.4 Capture Mode Description

Figure 11-180 shows the various components that implement the capture function.

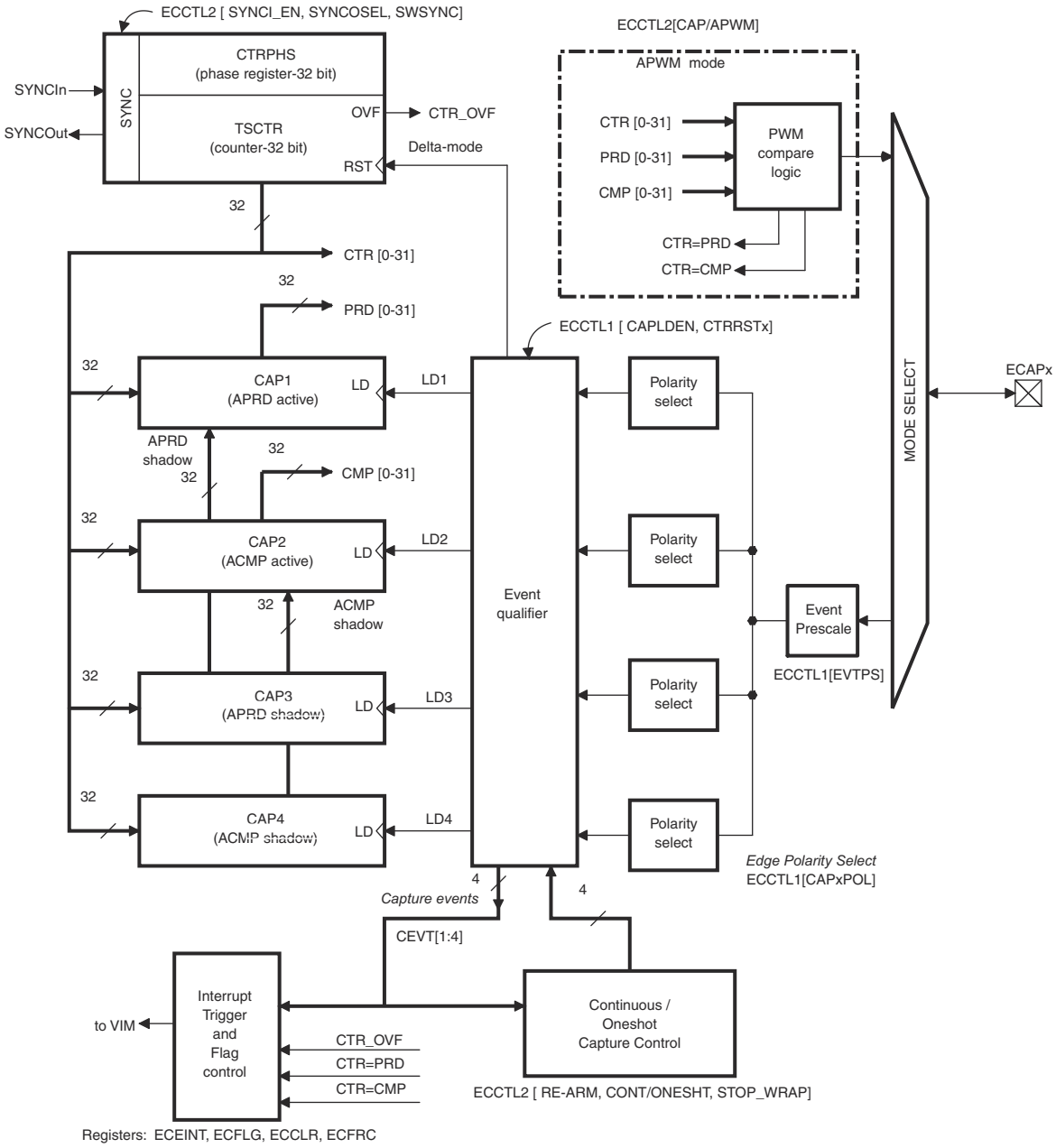

Figure 11-180. Capture Function Diagram

Copyright © 2025 Texas Instruments Incorporated

11.4.1.4.1 Event Prescaler

- An input capture signal (pulse train) can be prescaled by N = 2-62 (in multiples of 2) or can bypass the prescaler.

  This is useful when very high frequency signals are used as inputs. Figure 11-181 shows a functional diagram and Figure 11-182 shows the operation of the prescale function.

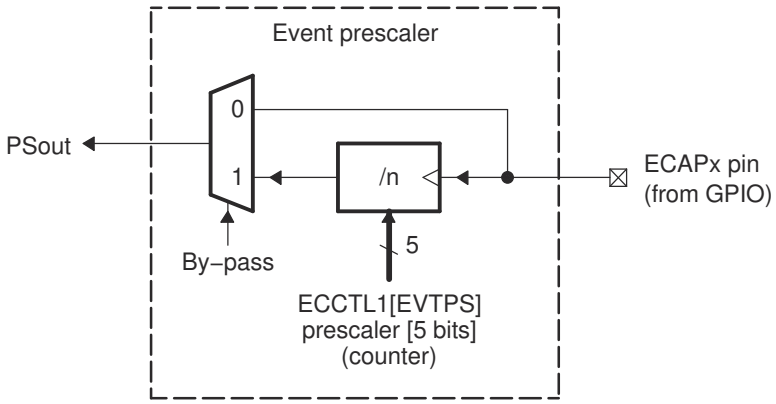

A. When a prescale value of 1 is chosen (that is, ECCTL1[13:9] = 0,0,0,0,0) the input capture signal by-passes the prescale logic completely.

Figure 11-181. Event Prescale Control

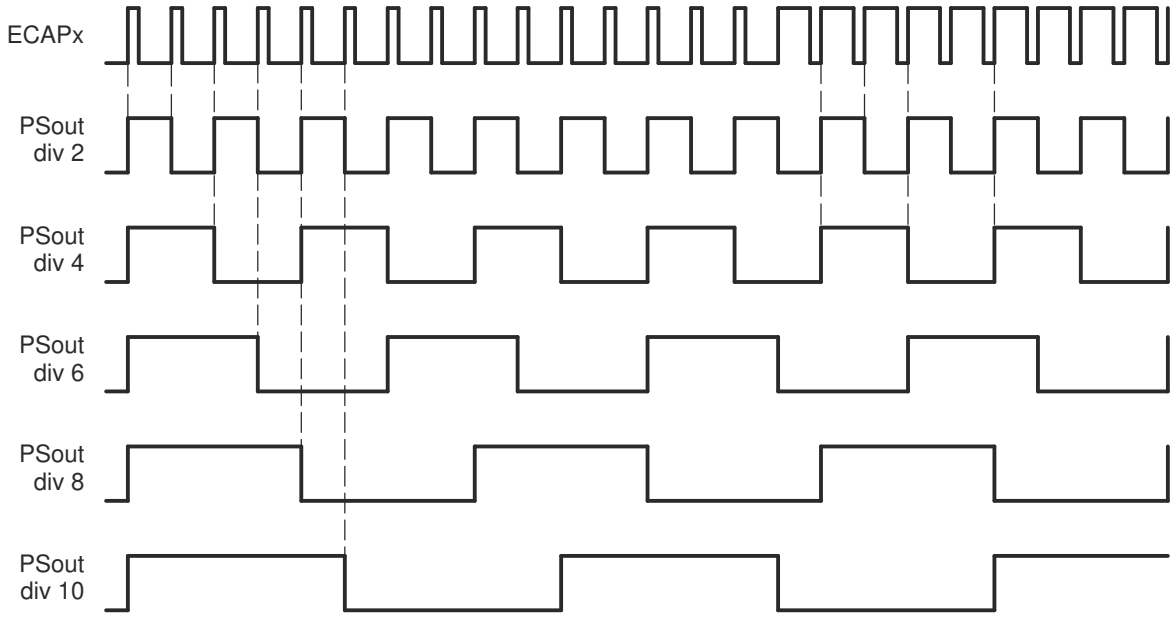

Figure 11-182. Prescale Function Waveforms

11.4.1.4.2 Edge Polarity Select and Qualifier

- Four independent edge polarity (rising edge/falling edge) selection MUXes are used, one for each capture event.
- Each edge (up to 4) is event qualified by the Modulo4 sequencer.
- The edge event is gated to its respective CAPx register by the Mod4 counter. The CAPx register is loaded on the falling edge.

Copyright © 2025 Texas Instruments Incorporated

11.4.1.4.3 Continuous/One-Shot Control

- The Mod4 (2 bit) counter is incremented via edge qualified events (CEVT1-CEVT4).
- The Mod4 counter continues counting (0->1->2->3->0) and wraps around unless stopped.
- A 2-bit stop register is used to compare the Mod4 counter output, and when equal stops the Mod4 counter and inhibits further loads of the CAP1-CAP4 registers. This occurs during one-shot operation.

The continuous/one-shot block controls the start/stop and reset (zero) functions of the Mod4 counter via a mono-shot type of action that can be triggered by the stop-value comparator and re-armed via software control.

Once armed, the eCAP module waits for 1-4 (defined by stop-value) capture events before freezing both the Mod4 counter and contents of CAP1-4 registers (that is, time-stamps).

Re-arming prepares the eCAP module for another capture sequence. Also re-arming clears (to zero) the Mod4 counter and permits loading of CAP1-4 registers again, providing the CAPLDEN bit is set.

In continuous mode, the Mod4 counter continues to run (0->1->2->3->0, the one-shot action is ignored, and capture values continue to be written to CAP1-4 in a circular buffer sequence.

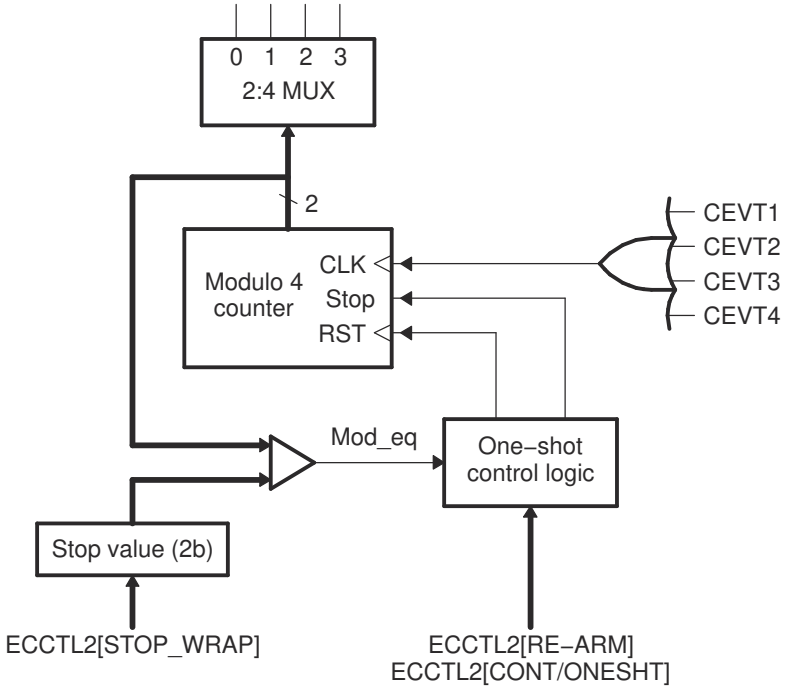

Figure 11-183. Details of the Continuous/One-shot Block

11.4.1.4.4 32-Bit Counter and Phase Control

This counter provides the time-base for event captures, and is clocked via the system clock.

A phase register is provided to achieve synchronization with other counters, via a hardware and software forced sync. This is useful in APWM mode when a phase offset between modules is needed.

On any of the four event loads, an option to reset the 32-bit counter is given. This is useful for time difference capture. The 32-bit counter value is captured first, then it is reset to 0 by any of the LD1-LD4 signals.

Copyright © 2025 Texas Instruments Incorporated

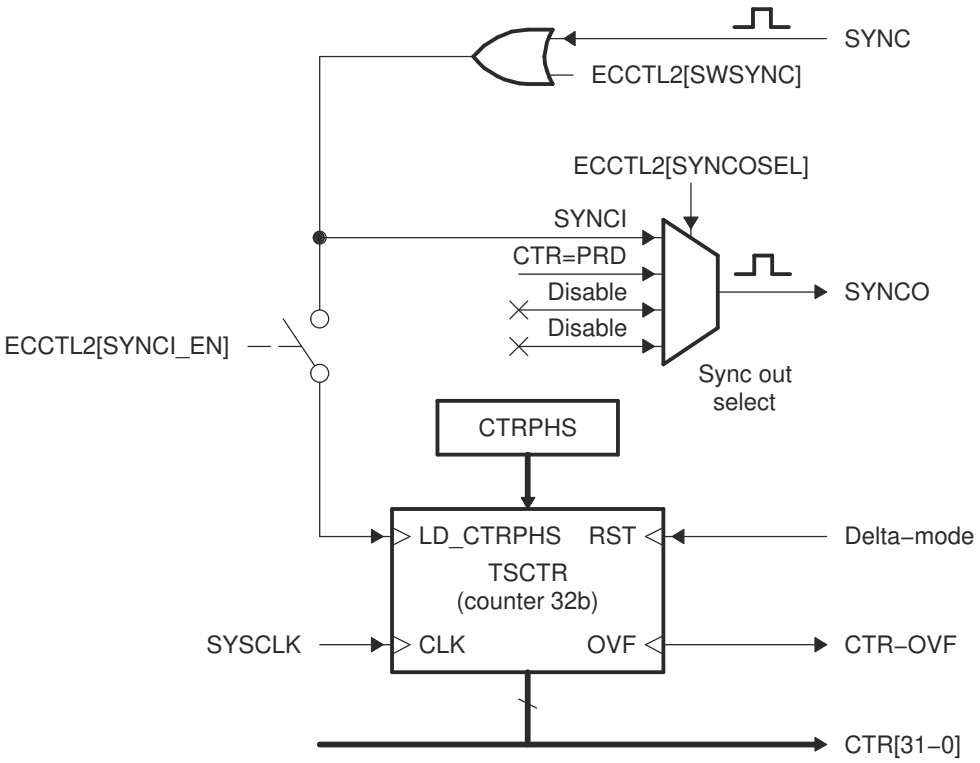

Figure 11-184. Details of the Counter and Synchronization Block

11.4.1.4.5 CAP1-CAP4 Registers

These 32-bit registers are fed by the 32-bit counter timer bus, CTR[0-31] and are loaded (that is, capture a time-stamp) when their respective LD inputs are strobed.

Loading of the capture registers can be inhibited via control bit CAPLDEN. During one-shot operation, this bit is cleared (loading is inhibited) automatically when a stop condition occurs, that is, StopValue = Mod4.

CAP1 and CAP2 registers become the active period and compare registers, respectively, in APWM mode.

CAP3 and CAP4 registers become the respective shadow registers (APRD and ACMP) for CAP1 and CAP2 during APWM operation.

11.4.1.4.6 Interrupt Control

An interrupt can be generated on capture events (CEVT1-CEVT4, CTROVF) or APWM events (CTR = PRD, CTR = CMP).

A counter overflow event (FFFFFFFF->00000000) is also provided as an interrupt source (CTROVF).

The capture events are edge and sequencer qualified (that is, ordered in time) by the polarity select and Mod4 gating, respectively.

One of these events can be selected as the interrupt source (from the eCAPx module) going to the PIE.

Seven interrupt events (CEVT1, CEVT2, CEVT3, CEVT4, CNTOVF, CTR=PRD, CTR=CMP) can be generated. The interrupt enable register (ECEINT) is used to enable/disable individual interrupt event sources. The interrupt flag register (ECFLG) indicates if any interrupt event has been latched and contains the global interrupt flag bit (INT). An interrupt pulse is generated to the PIE only if any of the interrupt events are enabled, the flag bit is 1, and the INT flag bit is 0. The interrupt service routine must clear the global interrupt flag bit and the serviced event via the interrupt clear register (ECCLR) before any other interrupt pulses are generated. You can force an interrupt event via the interrupt force register (ECFRC). This is useful for test purposes.

Copyright © 2025 Texas Instruments Incorporated

Note: The CEVT1, CEVT2, CEVT3, CEVT4 flags are only active in capture mode (ECCTL2[CAP_APWM == 0]). The CTR_PRD, CTR_CMP flags are only valid in APWM mode (ECCTL2[CAP_APWM == 1]). CNTOVF flag is valid in both modes.

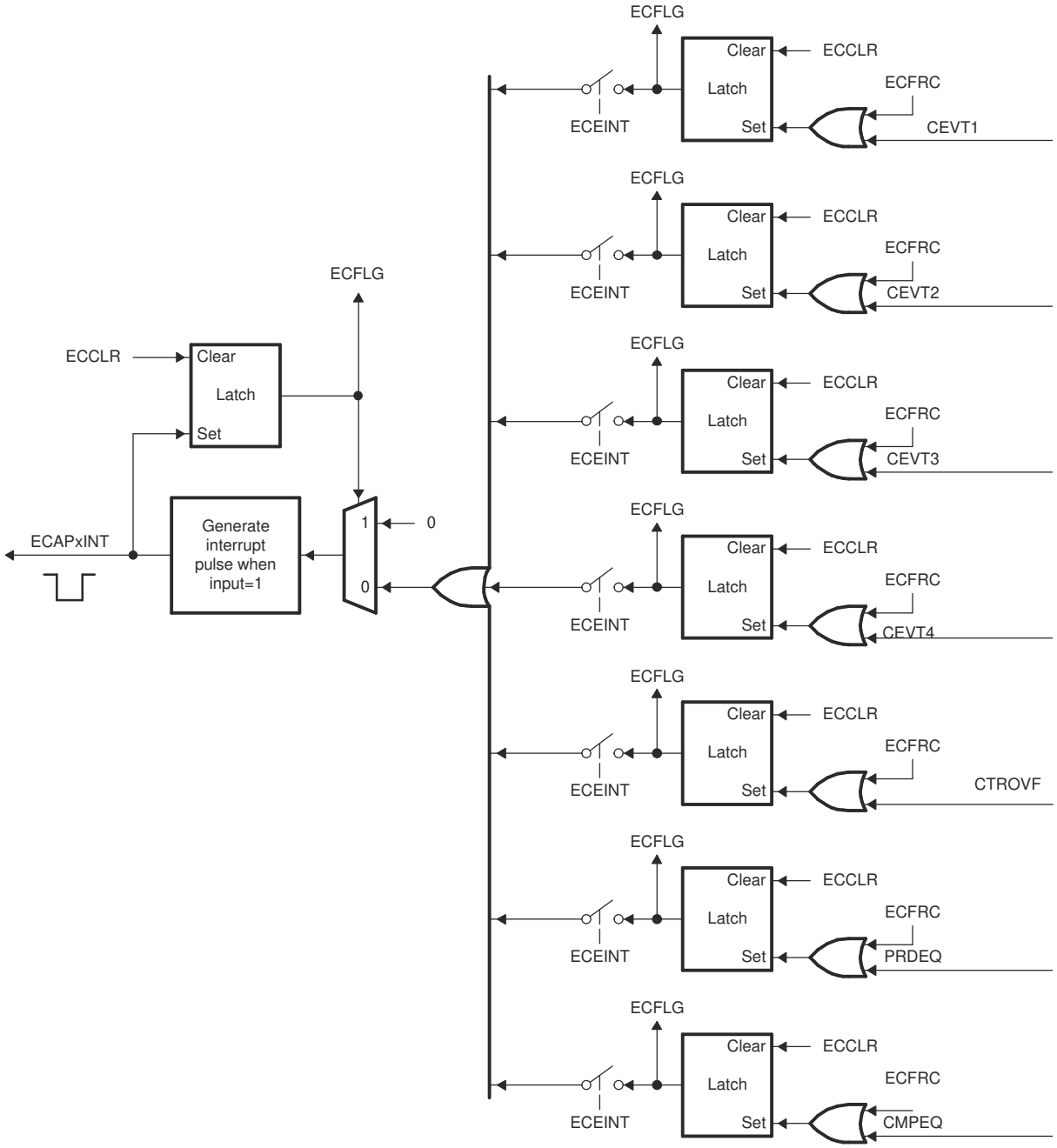

Figure 11-185. Interrupts in eCAP Module

11.4.1.4.7 Shadow Load and Lockout Control

In capture mode, this logic inhibits (locks out) any shadow loading of CAP1 or CAP2 from APRD and ACMP registers, respectively.

In APWM mode, shadow loading is active and two choices are permitted:

- Immediate - APRD or ACMP are transferred to CAP1 or CAP2 immediately upon writing a new value.

Copyright © 2025 Texas Instruments Incorporated

- On period equal, that is, CTR[31:0] = PRD[31:0]

11.4.1.4.8 APWM Mode Operation

Main operating highlights of the APWM section:

- The time-stamp counter bus is made available for comparison via 2 digital (32-bit) comparators.
- When CAP1/2 registers are not used in capture mode, their contents can be used as Period and Compare values in APWM mode.
- Double buffering is achieved via shadow registers APRD and ACMP (CAP3/4). The shadow register contents are transferred over to CAP1/2 registers either immediately upon a write, or on a CTR = PRD trigger.
- In APWM mode, writing to CAP1/CAP2 active registers will also write the same value to the corresponding shadow registers CAP3/CAP4. This emulates immediate mode. Writing to the shadow registers CAP3/CAP4 will invoke the shadow mode.
- During initialization, you must write to the active registers for both period and compare. This automatically copies the initial values into the shadow values. For subsequent compare updates, that is, during run-time, you only need to use the shadow registers.

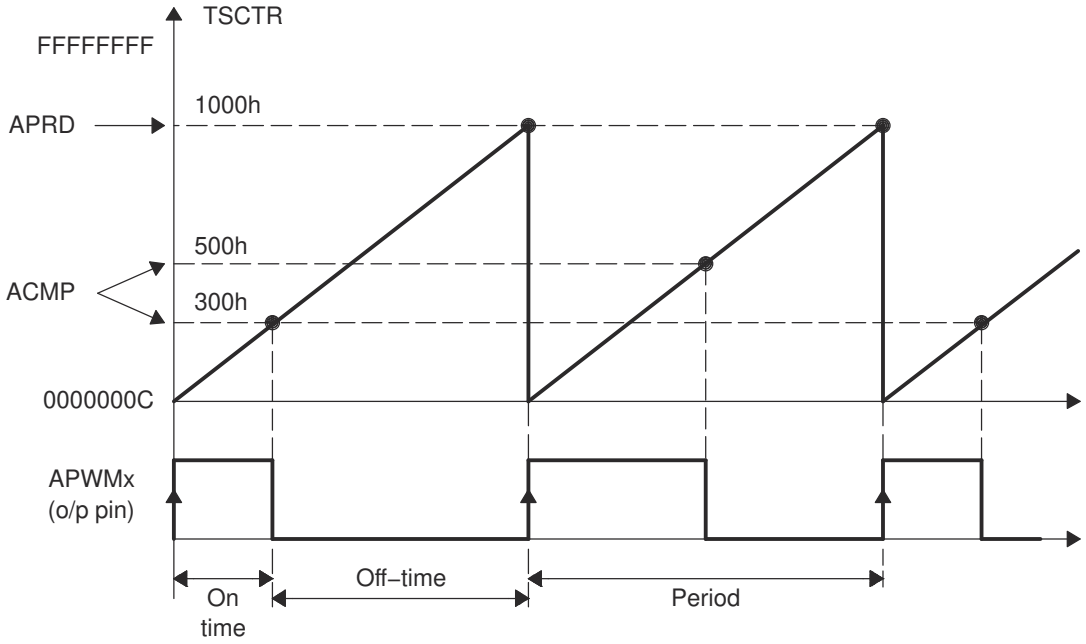

Figure 11-186. PWM Waveform Details Of APWM Mode Operation

The behavior of APWM active high mode (APWMPOL == 0) is as follows:

```
CMP = 0x00000000, output low for duration of period (0% duty)
```

```
CMP = 0x00000001, output high 1 cycle
```

```
CMP = 0x00000002, output high 2 cycles
```

```
CMP = PERIOD, output high except for 1 cycle (<100% duty)
```

```
CMP = PERIOD+1, output high for complete period (100% duty)
```

```
CMP > PERIOD+1, output high for complete period
```


Copyright © 2025 Texas Instruments Incorporated

The behavior of APWM active low mode (APWMPOL == 1) is as follows:

```
CMP = 0x00000000, output high for duration of period (0% duty)
```

```
CMP = 0x00000001, output low 1 cycle
```

```
CMP = 0x00000002, output low 2 cycles
```

```
CMP = PERIOD, output low except for 1 cycle (<100% duty)
```

```
CMP = PERIOD+1, output low for complete period (100% duty)
```

```
CMP > PERIOD+1, output low for complete period
```


Copyright © 2025 Texas Instruments Incorporated

11.4.1.5 ECAP Registers

Table 11-1139 lists the memory-mapped registers for the ECAP. All register offset addresses not listed in Table 11-1139 can be considered as reserved locations and the register contents should not be modified.

The base address for the control registers is FCF7 9300h for eCAP1, FCF7 9400h for eCAP2, FCF7 9500h for eCAP3, FCF7 9600h for eCAP4, FCF7 9700h for eCAP5, and FCF7 9800h for eCAP6.

Table 11-1139. ECAP Registers

Offset	Acronym	Register Name	Section
0h	TSCTR	Time-Stamp Counter	Section 12.4.1.5.1
4h	CTRPHS	Counter Phase Offset Value Register	Section 12.4.1.5.2
8h	CAP1	Capture 1 Register	Section 12.4.1.5.3
Ch	CAP2	Capture 2 Register	Section 12.4.1.5.4
10h	CAP3	Capture 3 Register	Section 12.4.1.5.5
14h	CAP4	Capture 4 Register	Section 12.4.1.5.6
24h	ECCTL0	Capture Control Register 0	ECCTL0 Register (Offset = 24h)[reset = 7Fh]
28h	ECCTL2	Capture Control Register 2	Section 12.4.1.5.8
2Ah	ECCTL1	Capture Control Register 1	Section 12.4.1.5.9
2Ch	ECFLG	Capture Interrupt Flag Register	Section 12.4.1.5.10
2Eh	ECEINT	Capture Interrupt Enable Register	Section 12.4.1.5.11
30h	ECFRC	Capture Interrupt Force Register	Section 12.4.1.5.12
32h	ECCLR	Capture Interrupt Clear Register	Section 12.4.1.5.13
3Ch	ECAPSYNCINSEL	SYNC Source Select Register	ECAPSYNCINSEL Register (Offset = 3Ch) [reset = 0h]

Complex bit access types are encoded to fit into small table cells. Table 11-1140 shows the codes that are used for access types in this section.

Table 11-1140. ECAP Access Type Codes

Access Type	Code	Description
Read Type		
R	R	Read
Write Type		
W	W	Write
Reset or Default Value		
-n		Value after reset or the default value

Copyright © 2025 Texas Instruments Incorporated

11.4.1.5.1 TSCTR Register (Offset = 0h) [reset = 0h]

TSCTR is shown in Figure 11-187 and described in Table 11-1141.

Return to Summary Table.

Figure 11-187. TSCTR Register

31	30	29	28	27	26	25	24	23	22	21	20	19	18	17	16	15	14	13	12	11	10	9	8	7	6	5	4	3	2	1	0
TSCTR																															
R/W-0h																															

Table 11-1141. TSCTR Register Field Descriptions

Bit	Field	Type	Reset	Description
31-0	TSCTR	R/W	0h	Active 32-bit counter register that is used as the capture time-base.

Copyright © 2025 Texas Instruments Incorporated

11.4.1.5.2 CTRPHS Register (Offset = 4h) [reset = 0h]

CTRPHS is shown in Figure 11-188 and described in Table 11-1142.

Return to Summary Table.

Figure 11-188. CTRPHS Register

31	30	29	28	27	26	25	24	23	22	21	20	19	18	17	16	15	14	13	12	11	10	9	8	7	6	5	4	3	2	1	0
CTRPHS																															
R/W-0h																															

Table 11-1142. CTRPHS Register Field Descriptions

Bit	Field	Type	Reset	Description
31-0	CTRPHS	R/W	0h	Counter phase value register that can be programmed for phase lag/lead. This register shadows TSCTR and is loaded into TSCTR upon either a SYNCI event or software force via a control bit. Used to achieve phase control synchronization with respect to other eCAP and ePWM time-bases.

Copyright © 2025 Texas Instruments Incorporated

11.4.1.5.3 CAP1 Register (Offset = 8h) [reset = 0h]

CAP1 is shown in Figure 11-189 and described in Table 11-1143.

Return to Summary Table.

In APWM mode, writing to CAP1/CAP2 active registers also writes the same value to the corresponding shadow registers CAP3/CAP4. This emulates immediate mode. Writing to the shadow registers CAP3/CAP4 invokes the shadow mode.

Figure 11-189. CAP1 Register

31	30	29	28	27	26	25	24	23	22	21	20	19	18	17	16	15	14	13	12	11	10	9	8	7	6	5	4	3	2	1	0
CAP1																															
R/W-0h																															

Table 11-1143. CAP1 Register Field Descriptions

Bit	Field	Type	Reset	Description
31-0	CAP1	R/W	0h	This register can be loaded (written) by: Time-Stamp (that is, counter value) during a capture event. Software - can be useful for test purposes. APRD shadow register (that is, CAP4) when used in APWM mode.

Copyright © 2025 Texas Instruments Incorporated

11.4.1.5.4 CAP2 Register (Offset = Ch) [reset = 0h]

CAP2 is shown in Figure 11-190 and described in Table 11-1144.

Return to Summary Table.

In APWM mode, writing to CAP1/CAP2 active registers also writes the same value to the corresponding shadow registers CAP3/CAP4. This emulates immediate mode. Writing to the shadow registers CAP3/CAP4 invokes the shadow mode.

Figure 11-190. CAP2 Register

31	30	29	28	27	26	25	24	23	22	21	20	19	18	17	16	15	14	13	12	11	10	9	8	7	6	5	4	3	2	1	0
CAP2																															
R/W-0h																															

Table 11-1144. CAP2 Register Field Descriptions

Bit	Field	Type	Reset	Description
31-0	CAP2	R/W	0h	This register can be loaded (written) by: Time-Stamp (that is, counter value) during a capture event. Software - can be useful for test purposes. APRD shadow register (that is, CAP4) when used in APWM mode.

Copyright © 2025 Texas Instruments Incorporated

11.4.1.5.5 CAP3 Register (Offset = 10h) [reset = 0h]

CAP3 is shown in Figure 11-191 and described in Table 11-1145.

Return to Summary Table.

Figure 11-191. CAP3 Register

31	30	29	28	27	26	25	24	23	22	21	20	19	18	17	16	15	14	13	12	11	10	9	8	7	6	5	4	3	2	1	0
CAP3																															
R/W-0h																															

Table 11-1145. CAP3 Register Field Descriptions

Bit	Field	Type	Reset	Description
31-0	CAP3	R/W	0h	In CMP mode, this is a time-stamp capture register. In APWM mode, this is the period shadow (APRD) register. Update the PWM period value through this register. In this mode, CAP3 (APRD) shadows CAP1.

Copyright © 2025 Texas Instruments Incorporated

11.4.1.5.6 CAP4 Register (Offset = 14h) [reset = 0h]

CAP4 is shown in Figure 11-192 and described in Table 11-1146.

Return to Summary Table.

Figure 11-192. CAP4 Register

31	30	29	28	27	26	25	24	23	22	21	20	19	18	17	16	15	14	13	12	11	10	9	8	7	6	5	4	3	2	1	0
CAP4																															
R/W-0h																															

Table 11-1146. CAP4 Register Field Descriptions

Bit	Field	Type	Reset	Description
31-0	CAP4	R/W	0h	In CMP mode, this is a time-stamp capture register. In APWM mode, this is the compare shadow (ACMP) register. Update the PWM compare value via this register. In this mode, CAP4 (ACMP) shadows CAP2.

11.4.1.5.7 ECCTL0 Register (Offset = 24h) [reset = 2h]

ECCTL0 is shown in ECCTL0 Registerand described in ECCTL0 Register Field Descriptions.

Return to Summary Table.

Table 11-1147. ECCTL0 Register

31	30	29	28	27	26	25	24	23	22	21	20	19	18	17	16	15	14	13	12	11	10	9	8	7	6	5	4	3	2	1	0
RESERVED																									INPUTSEL						
R-0h																									R/W-7Fh						

Table 11-1148. ECCTL0 Register Field Descriptions

Bit	Field	Type	Reset	Description
31-7	RESERVED	R	0h	Reserved
6-0	INPUTSEL	R/W	7Fh	Capture input source select bits[[br]]0000000 capture input is ECAPxINPUT[0] [[br]]0000001 capture input is ECAPxINPUT[1] [[br]]0000010 capture input is ECAPxINPUT[2][[br]]... [[br]]1111111 capture input is ECAPxINPUT[127]

Copyright © 2025 Texas Instruments Incorporated

11.4.1.5.8 ECCTL2 Register (Offset = 28h) [reset = 2h]

ECCTL2 is shown in Figure 11-193 and described in Table 11-1149.

Return to Summary Table.

Figure 11-193. ECCTL2 Register

15	14	13	12	11	10	9	8
RESERVED					APWMPOL	CAP_APWM	SWSYNC
R-0h					R/W-0h	R/W-0h	R/W-0h
7	6	5	4	3	2	1	0
SYNCO_SEL		SYNCI_EN	TSCTRSTOP	REARM	STOP_WRAP		CONT_ONESHT
R/W-0h		R/W-0h	R/W-0h	R/W-0h	R/W-1h		R/W-0h

Table 11-1149. ECCTL2 Register Field Descriptions

Bit	Field	Type	Reset	Description
15-11	RESERVED	R	0h	Reserved
10	APWMPOL	R/W	0h	APWM output polarity select. This is applicable only in APWM operating mode. 0h = Output is active high (that is, Compare value defines high time). 1h = Output is active low (that is, Compare value defines low time).
9	CAP_APWM	R/W	0h	CAP/APWM operating mode select. 0h = ECAP module operates in capture mode. This mode forces the following configuration: inhibits TSCTR resets via CTR = PRD event, inhibits shadow loads on CAP1 and CAP2 registers, permits user to enable CAP1 to CAP4 register load, CAPx and APWMx pin operates as a capture input. 1h = ECAP module operates in APWM mode. This mode forces the following configuration: resets TSCTR on CTR = PRD event (period boundary, permits shadow loading on CAP1 and CAP2 registers, disables loading of time-stamps into CAP1 to CAP4 registers, CAPx and APWMx pin operates as a APWM output.
8	SWSYNC	R/W	0h	Software-forced Counter (TSCTR) Synchronizing. This provides a convenient software method to synchronize some or all ECAP time bases. In APWM mode, the synchronizing can also be done via the CTR = PRD event. Note: Selection CTR = PRD is meaningful only in APWM mode, however, you can choose it in CAP mode if you find doing so is useful. 0h = Writing a 0 has no effect. Reading always returns 0. 1h = Writing a 1 forces a TSCTR shadow load of current ECAP module and any ECAP modules down-stream providing the SYNCO_SEL bits are 0,0. After writing a 1, this bit returns to 0.
7-6	SYNCO_SEL	R/W	0h	Sync-Out Select. 0h = Select sync-in event to be the sync-out signal (pass through). 1h = Select CTR = PRD event to be the sync-out signal. 2h = Disable sync out signal. 3h = Disable sync out signal.
5	SYNCI_EN	R/W	0h	Counter (TSCTR) Sync-In select mode. 0h = Disable sync-in option. 1h = Enable counter (TSCTR) to be loaded from CTRPHS register upon either a SYNCI signal or a software force event.

Copyright © 2025 Texas Instruments Incorporated

Table 11-1149. ECCTL2 Register Field Descriptions (continued)

Bit	Field	Type	Reset	Description
4	TSCTRSTOP	R/W	0h	Time Stamp (TSCTR) Counter Stop (freeze) Control. 0h = TSCTR is stopped. 1h = TSCTR is free-running.
3	REARM	R/W	0h	One-Shot Re-Arming Control, that is, wait for stop trigger. Note: The re-arm function is valid in one shot or continuous mode. 0h = Writing a 0 has no effect. Reading always returns 0. 1h = Arms the one-shot sequence as follows: resets the Mod4 counter to 0, unfreezes the Mod4 counter, enables capture register loads.
2-1	STOP_WRAP	R/W	1h	Stop value for one-shot mode. This is the number (between 1-4) of captures allowed to occur before the CAP(1-4) registers are frozen, that is, capture sequence is stopped. Notes: STOP_WRAP is compared to Mod4 counter and, when equal, two actions occur: 1) Mod4 counter is stopped (frozen). 2) Capture register loads are inhibited. In one-shot mode, further interrupt events are blocked until re-armed. Wrap value for continuous mode. This is the number (between 1-4) of the capture register in which the circular buffer wraps around and starts again. 0h = Stop after Capture Event 1 in one-shot mode. Wrap after Capture Event 1 in continuous mode. 1h = Stop after Capture Event 2 in one-shot mode. Wrap after Capture Event 2 in continuous mode. 2h = Stop after Capture Event 3 in one-shot mode. Wrap after Capture Event 3 in continuous mode. 3h = Stop after Capture Event 4 in one-shot mode. Wrap after Capture Event 4 in continuous mode.
0	CONT_ONESHT	R/W	0h	Continuous or one-shot mode control. This is applicable only in capture mode. 0h = Operate in continuous mode. 1h = Operate in one-shot mode.

Copyright © 2025 Texas Instruments Incorporated

11.4.1.5.9 ECCTL1 Register (Offset = 2Ah) [reset = 0h]

ECCTL1 is shown in Figure 11-194 and described in Table 11-1150.

Return to Summary Table.

Figure 11-194. ECCTL1 Register

15	14	13	12	11	10	9	8
FREE_SOFT		PRESCALE					CAPLDEN
R/W-0h		R/W-0h					R/W-0h
7	6	5	4	3	2	1	0
CTRRST4	CAP4POL	CTRRST3	CAP3POL	CTRRST2	CAP2POL	CTRRST1	CAP1POL
R/W-0h	R/W-0h	R/W-0h	R/W-0h	R/W-0h	R/W-0h	R/W-0h	R/W-0h

Table 11-1150. ECCTL1 Register Field Descriptions

Bit	Field	Type	Reset	Description
15-14	FREE_SOFT	R/W	0h	Emulation Control. 0h = TSCTR counter stops immediately on emulation suspend. 1h = TSCTR counter runs until value equals 0. 2h = TSCTR counter is unaffected by emulation suspend (Run Free). 3h = TSCTR counter is unaffected by emulation suspend (Run Free).
13-9	PRESCALE	R/W	0h	Event Filter prescale select. Valid values: 0 to 1Fh. 0h = Divide by 1 (that is, no prescale, by-pass the prescaler) 1h = Divide by 2 2h = Divide by 4 3h = Divide by 6 4h = Divide by 8 5h = Divide by 10 1Eh = Divide by 60 1Fh = Divide by 62
8	CAPLDEN	R/W	0h	Enable Loading of CAP1-4 registers on a capture event. 0h = Disable CAP1-4 register loads at capture event time. 1h = Enable CAP1-4 register loads at capture event time.
7	CTRRST4	R/W	0h	Counter Reset on Capture Event 4. 0h = Do not reset counter on Capture Event 4 (absolute time stamp operation). 1h = Reset counter after Capture Event 4 time-stamp has been captured (used in difference mode operation).
6	CAP4POL	R/W	0h	Capture Event 4 Polarity select. 0h = Capture Event 4 triggered on a rising edge (RE). 1h = Capture Event 4 triggered on a falling edge (FE).
5	CTRRST3	R/W	0h	Counter Reset on Capture Event 3. 0h = Do not reset counter on Capture Event 3 (absolute time stamp). 1h = Reset counter after Event 3 time-stamp has been captured (used in difference mode operation).
4	CAP3POL	R/W	0h	Capture Event 3 Polarity select. 0h = Capture Event 3 triggered on a rising edge (RE). 1h = Capture Event 3 triggered on a falling edge (FE).
3	CTRRST2	R/W	0h	Counter Reset on Capture Event 2. 0h = Do not reset counter on Capture Event 2 (absolute time stamp). 1h = Reset counter after Event 2 time-stamp has been captured (used in difference mode operation).

Copyright © 2025 Texas Instruments Incorporated

Table 11-1150. ECCTL1 Register Field Descriptions (continued)

Bit	Field	Type	Reset	Description
2	CAP2POL	R/W	0h	Capture Event 2 Polarity select. 0h = Capture Event 2 triggered on a rising edge (RE). 1h = Capture Event 2 triggered on a falling edge (FE).
1	CTRRST1	R/W	0h	Counter Reset on Capture Event 1. 0h = Do not reset counter on Capture Event 1 (absolute time stamp). 1h = Reset counter after Event 1 time-stamp has been captured (used in difference mode operation).
0	CAP1POL	R/W	0h	Capture Event 1 Polarity select. 0h = Capture Event 1 triggered on a rising edge (RE). 1h = Capture Event 1 triggered on a falling edge (FE).

Copyright © 2025 Texas Instruments Incorporated

11.4.1.5.10 ECFLG Register (Offset = 2Ch) [reset = 0h]

ECFLG is shown in Figure 11-195 and described in Table 11-1151.

Return to Summary Table.

Figure 11-195. ECFLG Register

15	14	13	12	11	10	9	8
RESERVED							
R-0h							
7	6	5	4	3	2	1	0
CTR_CMP	CTR_PRD	CTROVF	CEVT4	CEVT3	CEVT2	CEVT1	INT
R-0h	R-0h	R-0h	R-0h	R-0h	R-0h	R-0h	R-0h

Table 11-1151. ECFLG Register Field Descriptions

Bit	Field	Type	Reset	Description
15-8	RESERVED	R	0h	Reserved
7	CTR_CMP	R	0h	Compare Equal Compare Status Flag. This flag is active only in APWM mode. 0h = No event occurred. 1h = The counter (TSCTR) reached the compare register value (ACMP).
6	CTR_PRD	R	0h	Counter Equal Period Status Flag. This flag is only active in APWM mode. 0h = No event occurred. 1h = The counter (TSCTR) reached the period register value (APRD) and was reset.
5	CTROVF	R	0h	Counter Overflow Status Flag. This flag is active in CAP and APWM mode. 0h = No event occurred. 1h = The counter (TSCTR) has made the transition from FFFFFFFF to 00000000.
4	CEVT4	R	0h	Capture Event 4 Status Flag This flag is only active in CAP mode. 0h = No event occurred. 1h = The fourth event occurred at ECAPx pin.
3	CEVT3	R	0h	Capture Event 3 Status Flag. This flag is active only in CAP mode. 0h = No event occurred. 1h = The third event occurred at ECAPx pin.
2	CEVT2	R	0h	Capture Event 2 Status Flag. This flag is only active in CAP mode. 0h = No event occurred. 1h = The second event occurred at ECAPx pin.
1	CEVT1	R	0h	Capture Event 1 Status Flag. This flag is only active in CAP mode. 0h = No event occurred. 1h = The first event occurred at ECAPx pin.
0	INT	R	0h	Global Interrupt Status Flag. 0h = No interrupt is generated. 1h = An interrupt is generated.

Copyright © 2025 Texas Instruments Incorporated

11.4.1.5.11 ECEINT Register (Offset = 2Eh) [reset = 0h]

ECEINT is shown in Figure 11-196 and described in Table 11-1152.

Return to Summary Table.

The interrupt enable bits (CEVT1, ...) block any of the selected events from generating an interrupt. Events are still latched into the flag bit (ECFLG register) and can be forced/cleared via the ECFRC/ECCLR registers. The proper procedure for configuring peripheral modes and interrupts is as follows: 1) Disable global interrupts. 2) Stop eCAP counter. 3) Disable eCAP interrupts. 4) Configure peripheral registers. 5) Clear spurious eCAP interrupt flags. 6) Enable eCAP interrupts. 7) Start eCAP counter. 8) Enable global interrupts.

Figure 11-196. ECEINT Register

15	14	13	12	11	10	9	8
RESERVED							
R-0h							
7	6	5	4	3	2	1	0
CTR_CMP	CTR_PRD	CTROVF	CEVT4	CEVT3	CEVT2	CEVT1	RESERVED
R/W-0h	R/W-0h	R/W-0h	R/W-0h	R/W-0h	R/W-0h	R/W-0h	R-0h

Table 11-1152. ECEINT Register Field Descriptions

Bit	Field	Type	Reset	Description
15-8	RESERVED	R	0h	Reserved
7	CTR_CMP	R/W	0h	Counter Equal Compare Interrupt Enable. 0h = Disable Compare Equal as an Interrupt source. 1h = Enable Compare Equal as an Interrupt source.
6	CTR_PRD	R/W	0h	Counter Equal Period Interrupt Enable. 0h = Disable Period Equal as an Interrupt source. 1h = Enable Period Equal as an Interrupt source.
5	CTROVF	R/W	0h	Counter Overflow Interrupt Enable. 0h = Disabled Counter Overflow as an Interrupt source. 1h = Enable Counter Overflow as an Interrupt source.
4	CEVT4	R/W	0h	Capture Event 4 Interrupt Enable. 0h = Disable Capture Event 4 as an Interrupt source. 1h = Enable Capture Event 4 as an Interrupt source.
3	CEVT3	R/W	0h	Capture Event 3 Interrupt Enable. 0h = Disable Capture Event 3 as an Interrupt source. 1h = Enable Capture Event 3 as an Interrupt source.
2	CEVT2	R/W	0h	Capture Event 2 Interrupt Enable. 0h = Disable Capture Event 2 as an Interrupt source. 1h = Enable Capture Event 2 as an Interrupt source.
1	CEVT1	R/W	0h	Capture Event 1 Interrupt Enable. 0h = Disable Capture Event 1 as an Interrupt source. 1h = Enable Capture Event 1 as an Interrupt source.
0	RESERVED	R	0h	Reserved

Copyright © 2025 Texas Instruments Incorporated

11.4.1.5.12 ECFRC Register (Offset = 30h) [reset = 0h]

ECFRC is shown in Figure 11-197 and described in Table 11-1153.

Return to Summary Table.

Figure 11-197. ECFRC Register

15	14	13	12	11	10	9	8
RESERVED							
R-0h							
7	6	5	4	3	2	1	0
CTR_CMP	CTR_PRD	CTROVF	CEVT4	CEVT3	CEVT2	CEVT1	RESERVED
R/W-0h	R/W-0h	R/W-0h	R/W-0h	R/W-0h	R/W-0h	R/W-0h	R-0h

Table 11-1153. ECFRC Register Field Descriptions

Bit	Field	Type	Reset	Description
15-8	RESERVED	R	0h	Any writes to these bits must always have a value of 0.
7	CTR_CMP	R/W	0h	Force Counter Equal Compare Interrupt. 0h = Writing a 0 has no effect. Reading always returns 0. 1h = Writing a 1 sets the CTR_CMP flag bit.
6	CTR_PRD	R/W	0h	Force Counter Equal Period Interrupt. 0h = Writing a 0 has no effect. Reading always returns 0. 1h = Writing a 1 sets the CTR_PRD flag bit.
5	CTROVF	R/W	0h	Force Counter Overflow. 0h = Writing a 0 has no effect. Reading always returns 0. 1h = Writing a 1 to this bit sets the CTROVF flag bit.
4	CEVT4	R/W	0h	Force Capture Event 4. 0h = Writing a 0 has no effect. Reading always returns 0. 1h = Writing a 1 sets the CEVT4 flag bit
3	CEVT3	R/W	0h	Force Capture Event 3. 0h = Writing a 0 has no effect. Reading always returns 0. 1h = Writing a 1 sets the CEVT3 flag bit
2	CEVT2	R/W	0h	Force Capture Event 2. 0h = Writing a 0 has no effect. Reading always returns 0. 1h = Writing a 1 sets the CEVT2 flag bit.
1	CEVT1	R/W	0h	Force Capture Event 1. 0h = Writing a 0 has no effect. Reading always returns 0. 1h = Sets the CEVT1 flag bit.
0	RESERVED	R	0h	Any writes to these bits must always have a value of 0.

Copyright © 2025 Texas Instruments Incorporated

11.4.1.5.13 ECCLR Register (Offset = 32h) [reset = 0h]

ECCLR is shown in Figure 11-198 and described in Table 11-1154.

Return to Summary Table.

Figure 11-198. ECCLR Register

15	14	13	12	11	10	9	8
RESERVED							
R-0h							
7	6	5	4	3	2	1	0
CTR_CMP	CTR_PRD	CTROVF	CEVT4	CEVT3	CEVT2	CEVT1	INT
R/W-0h	R/W-0h	R/W-0h	R/W-0h	R/W-0h	R/W-0h	R/W-0h	R/W-0h

Table 11-1154. ECCLR Register Field Descriptions

Bit	Field	Type	Reset	Description
15-8	RESERVED	R	0h	Any writes to these bits must always have a value of 0.
7	CTR_CMP	R/W	0h	Counter Equal Compare Status Flag. 0h = Writing a 0 has no effect. Reading always returns 0. 1h = Writing a 1 clears the CTR_CMP flag condition.
6	CTR_PRD	R/W	0h	Counter Equal Period Status Flag. 0h = Writing a 0 has no effect. Reading always returns 0. 1h = Writing a 1 clears the CTR_PRD flag condition.
5	CTROVF	R/W	0h	Counter Overflow Status Flag. 0h = Writing a 0 has no effect. Reading always returns 0. 1h = Writing a 1 clears the CTROVF flag condition.
4	CEVT4	R/W	0h	Capture Event 4 Status Flag. 0h = Writing a 0 has no effect. Reading always returns 0. 1h = Writing a 1 clears the CEVT4 flag condition.
3	CEVT3	R/W	0h	Capture Event 3 Status Flag. 0h = Writing a 0 has no effect. Reading always returns 0. 1h = Writing a 1 clears the CEVT3 flag condition.
2	CEVT2	R/W	0h	Capture Event 2 Status Flag. 0h = Writing a 0 has no effect. Reading always returns 0. 1h = Writing a 1 clears the CEVT2 flag condition.
1	CEVT1	R/W	0h	Capture Event 1 Status Flag. 0h = Writing a 0 has no effect. Reading always returns 0. 1h = Writing a 1 clears the CEVT1 flag condition.
0	INT	R/W	0h	Global Interrupt Clear Flag. 0h = Writing a 0 has no effect. Reading always returns 0. 1h = Writing a 1 clears the INT flag and enable further interrupts to be generated if any of the event flags are set to 1.

11.4.1.5.14 ECAPSYNCINSEL Register (Offset = 3Ch) [reset = 0h]

ECAPSYNCINSEL is shown in ECAPSYNCINSEL Register and described in ECAPSYNCINSEL Register Field Descriptions

Return to Summary Table.

Table 11-1155. ECAPSYNCINSEL Register

31	30	29	28	27	26	25	24	23	22	21	20	19	18	17	16	15	14	13	12	11	10	9	8	7	6	5	4	3	2	1	0

Copyright © 2025 Texas Instruments Incorporated

Table 11-1155. ECAPSYNCINSEL Register (continued)

Reserved	SEL
0h	1h

Table 11-1156. ECAPSYNCINSEL Register Field Descriptions

Bit	Field	Type	Reset	Description
31-5	Reserved	R	0h	Reserved
4-0	SEL	R/W	1h	These bits determines the source of SYNCIN Signal See source options in SYNCIN Sources

Table 11-1157. SYNCIN Sources

SEL 4:0 Write	Source
00h	DISABLE Disable Syncin to eCAP
01h	EPWM1SYNCOUT
02h	EPWM2SYNCOUT
03h	EPWM3SYNCOUT
04h	EPWM4SYNCOUT
05h	EPWM5SYNCOUT
06h	EPWM6SYNCOUT
07h	EPWM7SYNCOUT
08h	EPWM8SYNCOUT
09h	EPWM9SYNCOUT
0Ah	EPWM10SYNCOUT
0Bh	EPWM11SYNCOUT
0Ch	EPWM12SYNCOUT
0Dh	EPWM13SYNCOUT
0Eh	EPWM14SYNCOUT
0Fh	EPWM15SYNCOUT
10h	EPWM16SYNCOUT
11h	ECAP1SYNCOUT
12h	ECAP2SYNCOUT
13h	ECAP3SYNCOUT
14h	ECAP4SYNCOUT
15h	ECAP5SYNCOUT
16h	ECAP6SYNCOUT
17h	ECAP7SYNCOUT
18h	INPUTXBAROUT5
19h	INPUTXBAROUT6
1Ah	ETHERCATSYNC0
1Bh	ETHERCATSYNC1
1Ch	Reserved
1Dh	Reserved
1Eh	Reserved
1Fh	Reserved

Copyright © 2025 Texas Instruments Incorporated

11.4.1.6 Application of the ECAP Module

The following sections will provide applications examples and code snippets to show how to configure and operate the eCAP module. For clarity and ease of use, the examples use the eCAP “C” header files. Below are useful #defines that will help in the understanding of the examples.

```
// ECCTL1 ( ECAP Control Reg 1)
 //==========================
 // CAPxPOL bits
 #define EC_RISING 0x0
 #define EC_FALLING 0x1
 // CTRRSTx bits
 #define EC_ABS_MODE 0x0
 #define EC_DELTA_MODE 0x1
 // PRESCALE bits
 #define EC_BYPASS 0x0
 #define EC_DIV1 0x0
 #define EC_DIV2 0x1
 #define EC_DIV4 0x2
 #define EC_DIV6 0x3
 #define EC_DIV8 0x4
 #define EC_DIV10 0x5
 // ECCTL2 ( ECAP Control Reg 2)
 //==========================
 // CONT/ONESHOT bit
 #define EC_CONTINUOUS 0x0
 #define EC_ONESHOT 0x1
 // STOPVALUE bit
 #define EC_EVENT1 0x0
 #define EC_EVENT2 0x1
 #define EC_EVENT3 0x2
 #define EC_EVENT4 0x3
 // RE-ARM bit
 #define EC_ARM 0x1
 // TSCTRSTOP bit
 #define EC_FREEZE 0x0
 #define EC_RUN 0x1
 // SYNCO_SEL bit
 #define EC_SYNCIN 0x0
 #define EC_CTR_PRD 0x1
 #define EC_SYNCO_DIS 0x2
 // CAP/APWM mode bit
 #define EC_CAP_MODE 0x0
 #define EC_APWM_MODE 0x1
 // APWMPOL bit
 #define EC_ACTV_HI 0x0
 #define EC_ACTV_LO 0x1
 // Generic
 #define EC_DISABLE 0x0
 #define EC_ENABLE 0x1
 #define EC_FORCE 0x1
```


Copyright © 2025 Texas Instruments Incorporated

11.4.1.6.1 Example 1 - Absolute Time-Stamp Operation Rising Edge Trigger

Figure 11-199 shows an example of continuous capture operation (Mod4 counter wraps around). In this figure, TSCTR counts-up without resetting and capture events are qualified on the rising edge only, this gives period (and frequency) information.

On an event, the TSCTR contents (that is, time-stamp) is first captured, then Mod4 counter is incremented to the next state. When the TSCTR reaches FFFF FFFFh (that is, maximum value), it wraps around to 0000 0000h (not shown in Figure 11-199), if this occurs, the CTROVF (counter overflow) flag is set, and an interrupt (if enabled) occurs, CTROVF (counter overflow) Flag is set, and an Interrupt (if enabled) occurs. Captured Time-stamps are valid at the point indicated by the diagram, that is, after the 4th event, hence event CEVT4 can conveniently be used to trigger an interrupt and the CPU can read data from the CAPx registers.

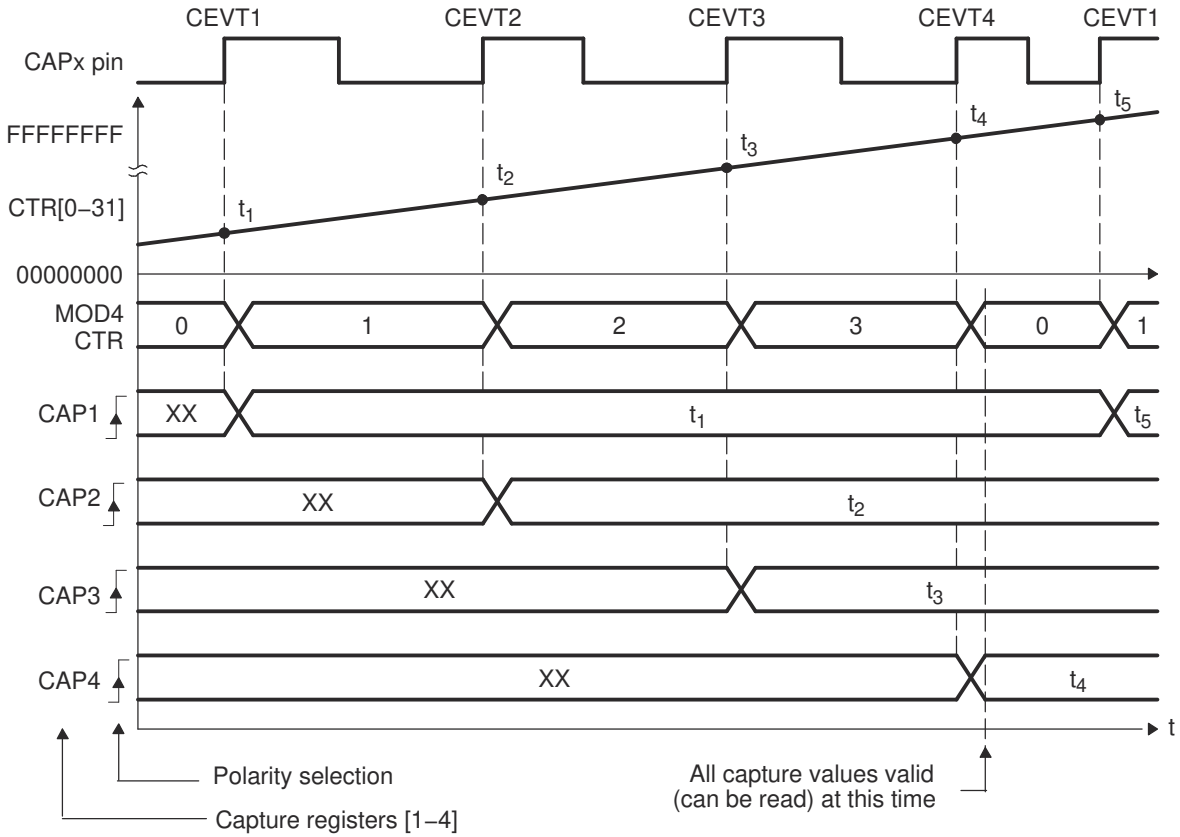

Figure 11-199. Capture Sequence for Absolute Time-stamp and Rising Edge Detect

Copyright © 2025 Texas Instruments Incorporated

11.4.1.6.1.1 Code snippet for CAP mode Absolute Time, Rising Edge Trigger

```
// Code snippet for CAP mode Absolute Time, Rising edge trigger
 // Initialization Time
 //=======================
 // ECAP module 1 config
 ECap1Regs.ECCTL1.bit.CAP1POL = EC_RISING;
 ECap1Regs.ECCTL1.bit.CAP2POL = EC_RISING;
 ECap1Regs.ECCTL1.bit.CAP3POL = EC_RISING;
 ECap1Regs.ECCTL1.bit.CAP4POL = EC_RISING;
 ECap1Regs.ECCTL1.bit.CTRRST1 = EC_ABS_MODE;
 ECap1Regs.ECCTL1.bit.CTRRST2 = EC_ABS_MODE;
 ECap1Regs.ECCTL1.bit.CTRRST3 = EC_ABS_MODE;
 ECap1Regs.ECCTL1.bit.CTRRST4 = EC_ABS_MODE;
 ECap1Regs.ECCTL1.bit.CAPLDEN = EC_ENABLE;
 ECap1Regs.ECCTL1.bit.PRESCALE = EC_DIV1;
 ECap1Regs.ECCTL2.bit.CAP_APWM = EC_CAP_MODE;
 ECap1Regs.ECCTL2.bit.CONT_ONESHT = EC_CONTINUOUS;
 ECap1Regs.ECCTL2.bit.SYNCO_SEL = EC_SYNCO_DIS;
 ECap1Regs.ECCTL2.bit.SYNCI_EN = EC_DISABLE;
 ECap1Regs.ECCTL2.bit.TSCTRSTOP = EC_RUN; // Allow TSCTR to run
 // Run Time ( e.g. CEVT4 triggered ISR call)
 //=========================================
 TSt1 = ECap1Regs.CAP1; // Fetch Time-Stamp captured at t1
 TSt2 = ECap1Regs.CAP2; // Fetch Time-Stamp captured at t2
 TSt3 = ECap1Regs.CAP3; // Fetch Time-Stamp captured at t3
 TSt4 = ECap1Regs.CAP4; // Fetch Time-Stamp captured at t4
 Period1 = TSt2-TSt1; // Calculate 1st period
 Period2 = TSt3-TSt2; // Calculate 2nd period
 Period3 = TSt4-TSt3; // Calculate 3rd period
```


Copyright © 2025 Texas Instruments Incorporated

11.4.1.6.2 Example 2 - Absolute Time-Stamp Operation Rising and Falling Edge Trigger

In Figure 11-200 the eCAP operating mode is almost the same as in the previous section except capture events are qualified as either rising or falling edge, this now gives both period and duty cycle information, that is, Period1 = $t_3 - t_1$, Period2 = $t_5 - t_3$, and so on; Duty Cycle1 (on-time %) = $(t_2 - t_1)$ / Period1 × 100%, and so on; Duty Cycle1 (off-time %) = $(t_3 - t_2)$ / Period1 × 100%, and so on.

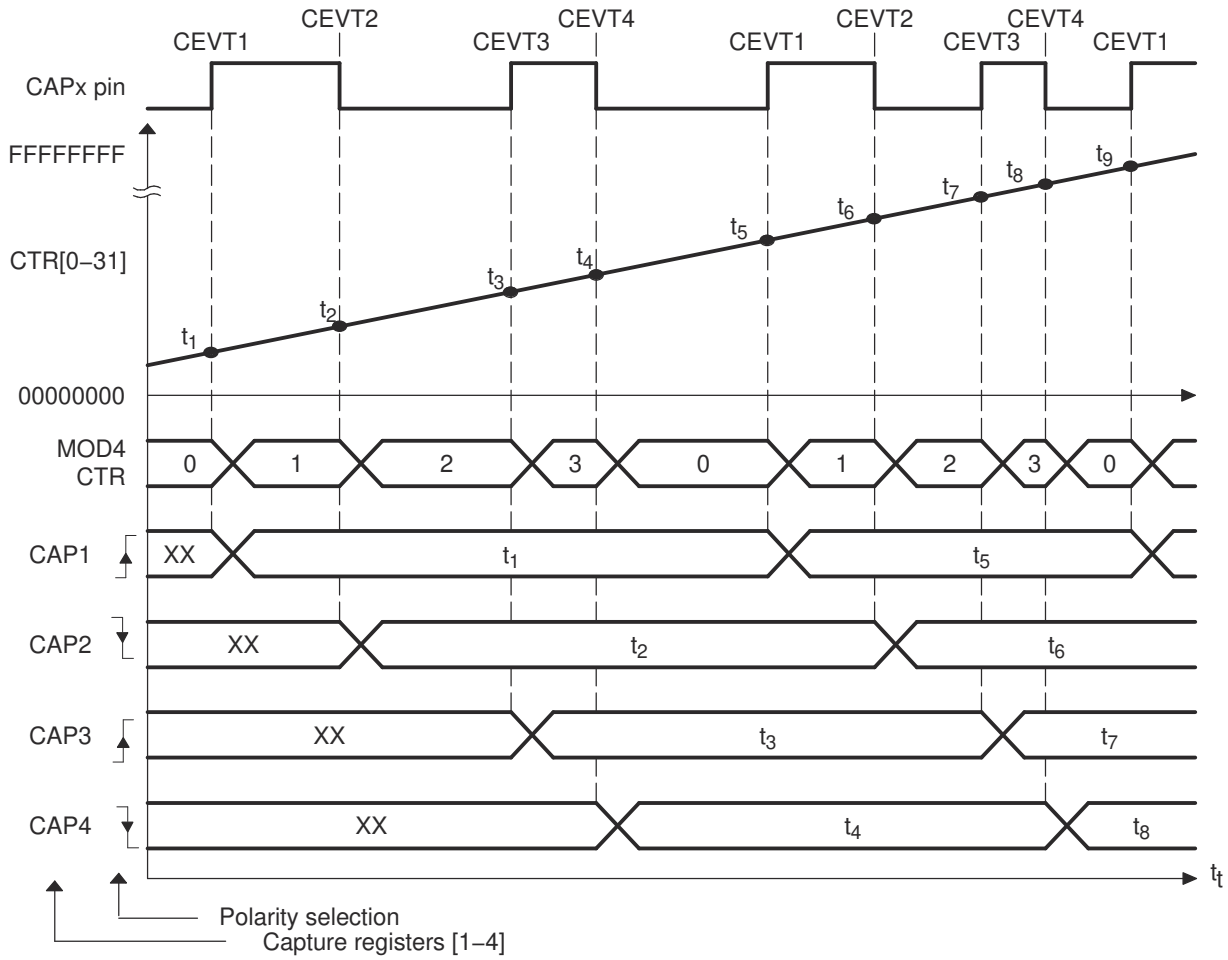

Figure 11-200. Capture Sequence for Absolute Time-stamp With Rising and Falling Edge Detect

Copyright © 2025 Texas Instruments Incorporated

11.4.1.6.2.1 Code snippet for CAP mode Absolute Time, Rising & Falling Edge Triggers

```
// Code snippet for CAP mode Absolute Time, Rising & Falling edge triggers
 // Initialization Time
 //=======================
 // ECAP module 1 config
 ECap1Regs.ECCTL1.bit.CAP1POL = EC_RISING;
 ECap1Regs.ECCTL1.bit.CAP2POL = EC_FALLING;
 ECap1Regs.ECCTL1.bit.CAP3POL = EC_RISING;
 ECap1Regs.ECCTL1.bit.CAP4POL = EC_FALLING;
 ECap1Regs.ECCTL1.bit.CTRRST1 = EC_ABS_MODE;
 ECap1Regs.ECCTL1.bit.CTRRST2 = EC_ABS_MODE;
 ECap1Regs.ECCTL1.bit.CTRRST3 = EC_ABS_MODE;
 ECap1Regs.ECCTL1.bit.CTRRST4 = EC_ABS_MODE;
 ECap1Regs.ECCTL1.bit.CAPLDEN = EC_ENABLE;
 ECap1Regs.ECCTL1.bit.PRESCALE = EC_DIV1;
 ECap1Regs.ECCTL2.bit.CAP_APWM = EC_CAP_MODE;
 ECap1Regs.ECCTL2.bit.CONT_ONESHT = EC_CONTINUOUS;
 ECap1Regs.ECCTL2.bit.SYNCO_SEL = EC_SYNCO_DIS;
 ECap1Regs.ECCTL2.bit.SYNCI_EN = EC_DISABLE;
 ECap1Regs.ECCTL2.bit.TSCTRSTOP = EC_RUN; // Allow TSCTR to run
 // Run Time ( e.g. CEVT4 triggered ISR call)
 //=========================================
 TSt1 = ECap1Regs.CAP1; // Fetch Time-Stamp captured at t1
 TSt2 = ECap1Regs.CAP2; // Fetch Time-Stamp captured at t2
 TSt3 = ECap1Regs.CAP3; // Fetch Time-Stamp captured at t3
 TSt4 = ECap1Regs.CAP4; // Fetch Time-Stamp captured at t4
 Period1 = TSt3-TSt1; // Calculate 1st period
 DutyOnTime1 = TSt2-TSt1; // Calculate On time
 DutyOffTime1 = TSt3-TSt2; // Calculate Off time
```


Copyright © 2025 Texas Instruments Incorporated

11.4.1.6.3 Example 3 - Time Difference (Delta) Operation Rising Edge Trigger

This example Figure 11-201 shows how the eCAP module can be used to collect Delta timing data from pulse train waveforms. Here Continuous Capture mode (TSCTR counts-up without resetting, and Mod4 counter wraps around) is used. In Delta-time mode, TSCTR is Reset back to Zero on every valid event. Here Capture events are qualified as Rising edge only. On an event, TSCTR contents (that is, time-stamp) is captured first, and then TSCTR is reset to Zero. The Mod4 counter then increments to the next state. If TSCTR reaches FFFF FFFFh (that is, maximum value), before the next event, it wraps around to 0000 0000h and continues, a CNTOVF (counter overflow) Flag is set, and an Interrupt (if enabled) occurs. The advantage of Delta-time Mode is that the CAPx contents directly give timing data without the need for CPU calculations, that is, Period1 = T_1, Period2 = T_2, and so on. As shown in the diagram, the CEVT1 event is a good trigger point to read the timing data, T_1, T_2, T_3, T_4 are all valid here.

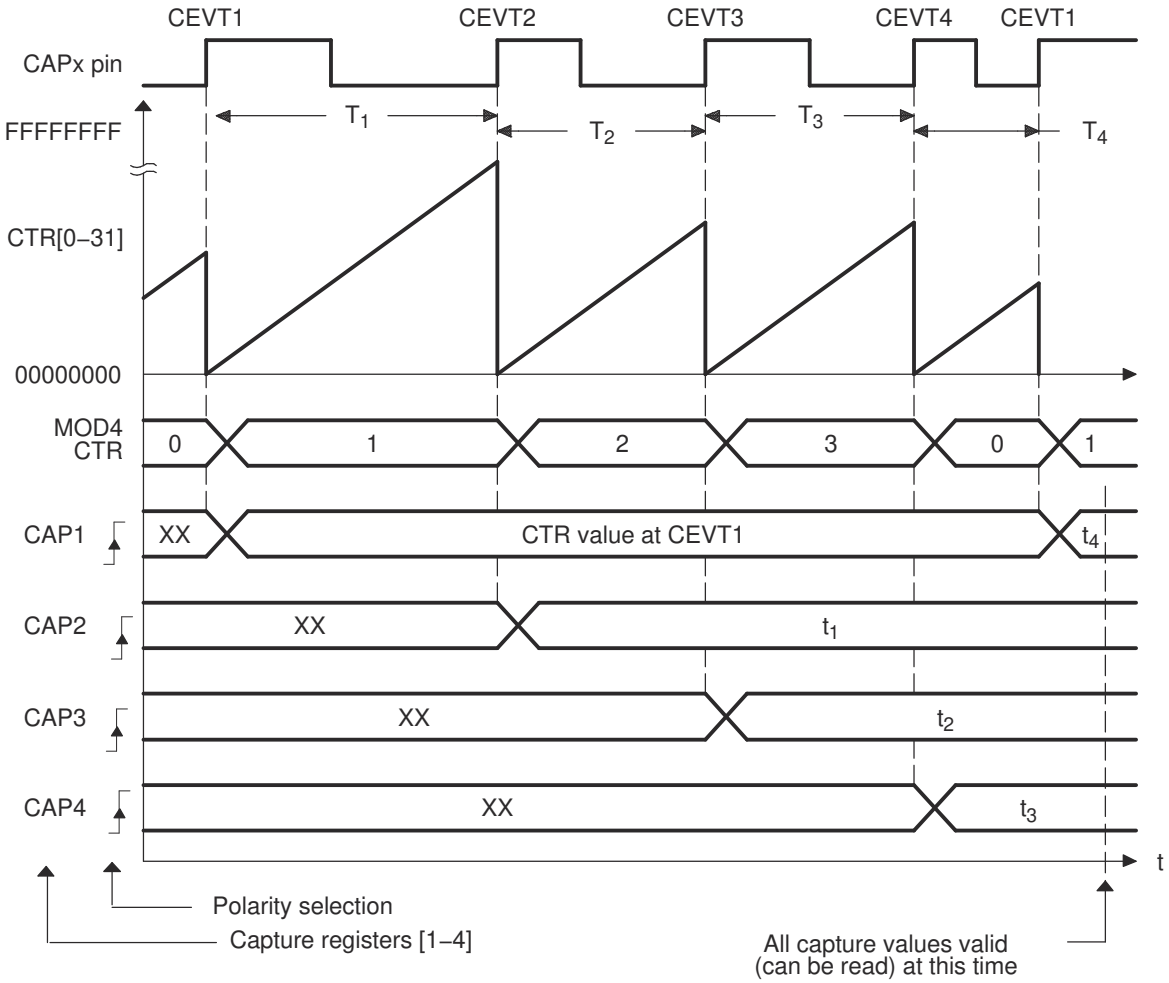

Figure 11-201. Capture Sequence for Delta Mode Time-stamp and Rising Edge Detect

Copyright © 2025 Texas Instruments Incorporated

11.4.1.6.3.1 Code snippet for CAP mode Delta Time, Rising Edge Trigger

```
// Code snippet for CAP mode Delta Time, Rising edge trigger
 // Initialization Time
 //=======================
 // ECAP module 1 config
 ECap1Regs.ECCTL1.bit.CAP1POL = EC_RISING;
 ECap1Regs.ECCTL1.bit.CAP2POL = EC_RISING;
 ECap1Regs.ECCTL1.bit.CAP3POL = EC_RISING;
 ECap1Regs.ECCTL1.bit.CAP4POL = EC_RISING;
 ECap1Regs.ECCTL1.bit.CTRRST1 = EC_DELTA_MODE;
 ECap1Regs.ECCTL1.bit.CTRRST2 = EC_DELTA_MODE;
 ECap1Regs.ECCTL1.bit.CTRRST3 = EC_DELTA_MODE;
 ECap1Regs.ECCTL1.bit.CTRRST4 = EC_DELTA_MODE;
 ECap1Regs.ECCTL1.bit.CAPLDEN = EC_ENABLE;
 ECap1Regs.ECCTL1.bit.PRESCALE = EC_DIV1;
 ECap1Regs.ECCTL2.bit.CAP_APWM = EC_CAP_MODE;
 ECap1Regs.ECCTL2.bit.CONT_ONESHT = EC_CONTINUOUS;
 ECap1Regs.ECCTL2.bit.SYNCO_SEL = EC_SYNCO_DIS;
 ECap1Regs.ECCTL2.bit.SYNCI_EN = EC_DISABLE;
 ECap1Regs.ECCTL2.bit.TSCTRSTOP = EC_RUN; // Allow TSCTR to run
 // Run Time ( e.g. CEVT1 triggered ISR call)
 //=========================================
 // Note: here Time-stamp directly represents the Period value.
 Period4 = ECap1Regs.CAP1; // Fetch Time-Stamp captured at T1
 Period1 = ECap1Regs.CAP2; // Fetch Time-Stamp captured at T2
 Period2 = ECap1Regs.CAP3; // Fetch Time-Stamp captured at T3
 Period3 = ECap1Regs.CAP4; // Fetch Time-Stamp captured at T4
```


Copyright © 2025 Texas Instruments Incorporated

11.4.1.6.4 Example 4 - Time Difference (Delta) Operation Rising and Falling Edge Trigger

In Figure 11-202 the eCAP operating mode is almost the same as in previous section except Capture events are qualified as either Rising or Falling edge, this now gives both Period and Duty cycle information, that is, Period1 = T_1+T_2, Period2 = T_3+T_4, and so on; Duty Cycle1 (on-time %) = T_1 / Period1 × 100%, and so on; Duty Cycle1 (off-time %) = T_2 / Period1 × 100%, and so on.

During initialization, you must write to the active registers for both period and compare. This will then automatically copy the init values into the shadow values. For subsequent compare updates, during run-time, only the shadow registers must be used.

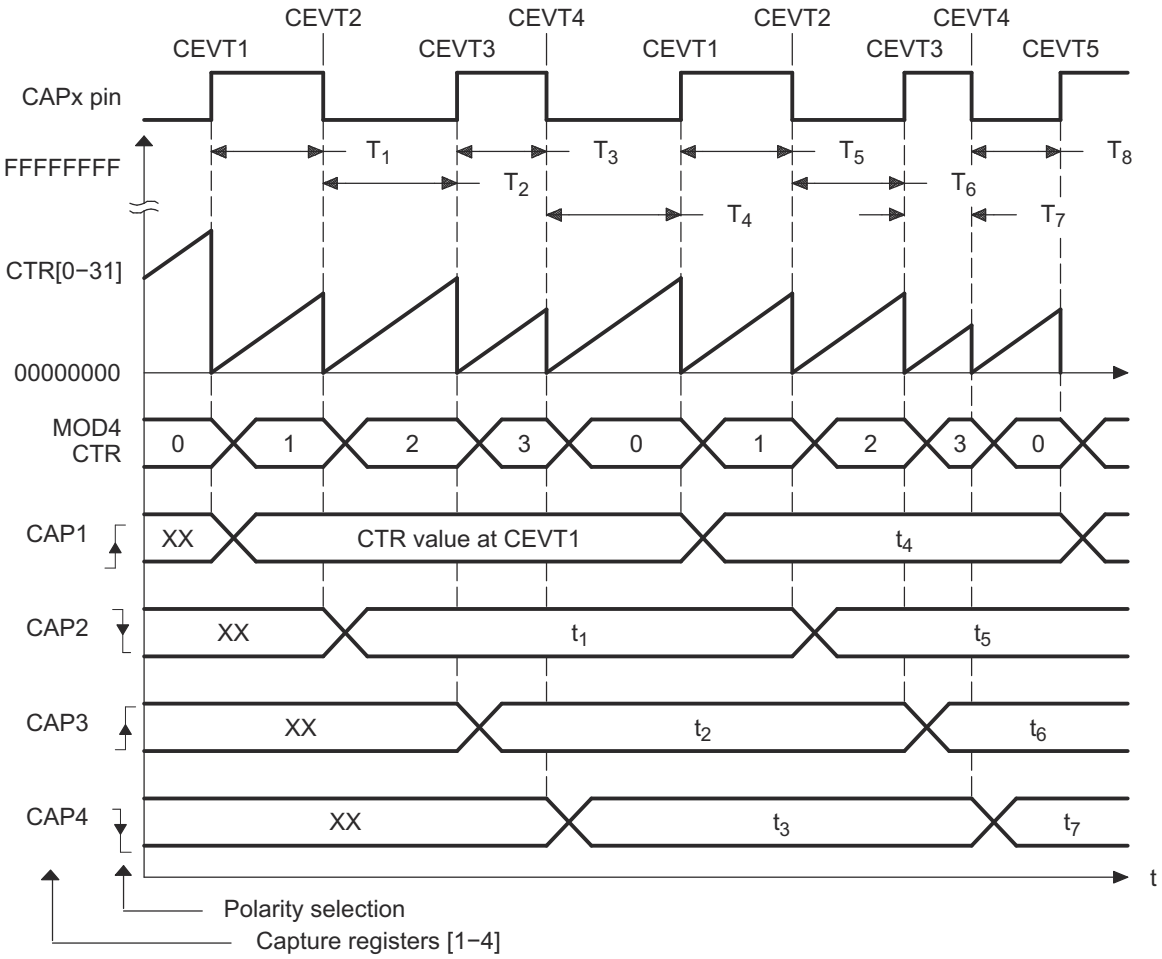

Figure 11-202. Capture Sequence for Delta Mode Time-stamp With Rising and Falling Edge Detect

Copyright © 2025 Texas Instruments Incorporated

11.4.1.6.4.1 Code snippet for CAP mode Delta Time, Rising and Falling Edge Triggers

```
// Code snippet for CAP mode Delta Time, Rising and Falling edge triggers
 // Initialization Time
 //=======================
 // ECAP module 1 config
 ECap1Regs.ECCTL1.bit.CAP1POL = EC_RISING;
 ECap1Regs.ECCTL1.bit.CAP2POL = EC_FALLING;
 ECap1Regs.ECCTL1.bit.CAP3POL = EC_RISING;
 ECap1Regs.ECCTL1.bit.CAP4POL = EC_FALLING;
 ECap1Regs.ECCTL1.bit.CTRRST1 = EC_DELTA_MODE;
 ECap1Regs.ECCTL1.bit.CTRRST2 = EC_DELTA_MODE;
 ECap1Regs.ECCTL1.bit.CTRRST3 = EC_DELTA_MODE;
 ECap1Regs.ECCTL1.bit.CTRRST4 = EC_DELTA_MODE;
 ECap1Regs.ECCTL1.bit.CAPLDEN = EC_ENABLE;
 ECap1Regs.ECCTL1.bit.PRESCALE = EC_DIV1;
 ECap1Regs.ECCTL2.bit.CAP_APWM = EC_CAP_MODE;
 ECap1Regs.ECCTL2.bit.CONT_ONESHT = EC_CONTINUOUS;
 ECap1Regs.ECCTL2.bit.SYNCO_SEL = EC_SYNCO_DIS;
 ECap1Regs.ECCTL2.bit.SYNCI_EN = EC_DISABLE;
 ECap1Regs.ECCTL2.bit.TSCTRSTOP = EC_RUN; // Allow TSCTR to run
 // Run Time ( e.g. CEVT1 triggered ISR call)
 //=========================================
 // Note: here Time-stamp directly represents the Duty cycle values.
 DutyOnTime1 = ECap1Regs.CAP2; // Fetch Time-Stamp captured at T2
 DutyOffTime1 = ECap1Regs.CAP3; // Fetch Time-Stamp captured at T3
 DutyOnTime2 = ECap1Regs.CAP4; // Fetch Time-Stamp captured at T4
 DutyOffTime2 = ECap1Regs.CAP1; // Fetch Time-Stamp captured at T1
 Period1 = DutyOnTime1 + DutyOffTime1;
 Period2 = DutyOnTime2 + DutyOffTime2;
```


Copyright © 2025 Texas Instruments Incorporated

11.4.1.7 Application of the APWM Mode

In this example, the eCAP module is configured to operate as a PWM generator. Here a very simple single channel PWM waveform is generated from output pin APWMx. The PWM polarity is active high, which means that the compare value (CAP2 reg is now a compare register) represents the on-time (high level) of the period. Alternatively, if the APWMPOL bit is configured for active low, then the compare value represents the off-time. Note here values are in hexadecimal (h) notation.

11.4.1.7.1 Simple PWM Generation (Independent Channel/s)

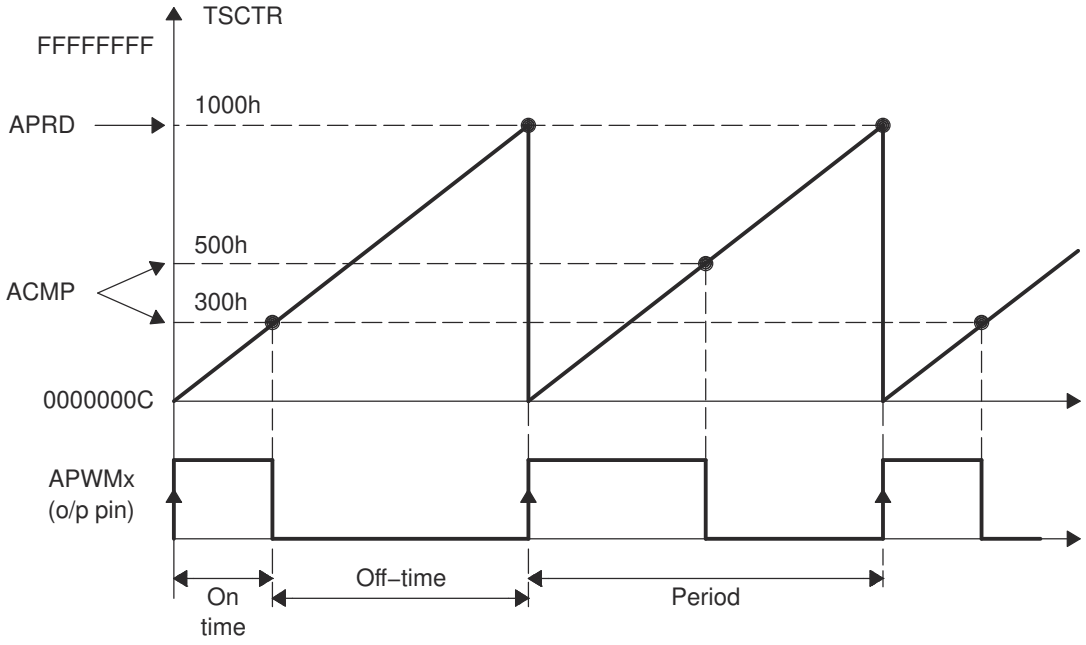

Figure 11-203. PWM Waveform Details of APWM Mode Operation

Example 11-1. Code Snippet for APWM Mode

```
// Code snippet for APWM mode Example 1
 // Initialization Time
 //======================
 // ECAP module 1 config
 ECap1Regs.CAP1 = 0x1000; // Set period value
 ECap1Regs.CTRPHS = 0x0; // make phase zero
 ECap1Regs.ECCTL2.bit.CAP_APWM = EC_APWM_MODE;
 ECap1Regs.ECCTL2.bit.APWMPOL = EC_ACTV_HI; // Active high
 ECap1Regs.ECCTL2.bit.SYNCI_EN = EC_DISABLE; // Synch not used
 ECap1Regs.ECCTL2.bit.SYNCO_SEL = EC_SYNCO_DIS; // Synch not used
 ECap1Regs.ECCTL2.bit.TSCTRSTOP = EC_RUN; // Allow TSCTR to run
 // Run Time (Instant 1, e.g. ISR call)
 //======================
 ECap1Regs.CAP2 = 0x300; // Set Duty cycle i.e. compare value
 // Run Time (Instant 2, e.g. another ISR call)
 //======================
 ECap1Regs.CAP2 = 0x500; // Set Duty cycle i.e. compare value
```

11.4.2 Enhanced Pulse Width Modulator (ePWM) Module

The enhanced pulse width modulator (ePWM) peripheral is a key element in controlling many of the power electronic systems found in both commercial and industrial equipments. The features supported by the ePWM make it especially suitable for digital motor control.

11.4.2.1 Introduction.....3388

Copyright © 2025 Texas Instruments Incorporated

11.4.2.2 ePWM Submodules 3392
11.4.2.3 Application Examples 3452
11.4.2.4 ePWM Module Control and Status Registers 3467

Copyright © 2025 Texas Instruments Incorporated

11.4.2.1 Introduction

An effective PWM peripheral must be able to generate complex pulse width waveforms with minimal CPU overhead or intervention. It needs to be highly programmable and very flexible while being easy to understand and use. The ePWM unit described here addresses these requirements by allocating all needed timing and control resources on a per PWM channel basis. Cross coupling or sharing of resources has been avoided; instead, the ePWM is built up from smaller single channel modules with separate resources that can operate together as required to form a system. This modular approach results in an orthogonal architecture and provides a more transparent view of the peripheral structure, helping users to understand its operation quickly.

In this document the letter x within a signal or module name is used to indicate a generic ePWM instance on a device. For example, output signals EPWMAx and EPWMBx refer to the output signals from the ePWMx instance. Thus, EPWMA0 and EPWMA1 belong to the first instance of ePWM - ePWMA.

Note

Images and image titles in this chapter may use the following naming conventions:

- EPWMxA to refer to EPWMx0
- EPWMxB to refer to EPWMx1
- EPWM1 to refer to EPWMA

11.4.2.1.1 Submodule Overview

The ePWM module represents one complete PWM channel composed of two PWM outputs: EPWMAx and EPWMBx. Multiple ePWM modules are instanced within a device as shown in *Multiple ePWM Modules*. Each ePWM instance is identical and is indicated by a numerical value starting with 1. For example, ePWM1 is the first instance and ePWM3 is the third instance in the system and ePWMx indicates any instance.

The ePWM modules are chained together via a clock synchronization scheme that allows them to operate as a single system when required. Additionally, this synchronization scheme can be extended to the capture peripheral modules (eCAP). Modules can also operate stand-alone.

Each ePWM module supports the following features:

- Dedicated 16-bit time-base counter with period and frequency control
- Two PWM outputs that can be used in the following configurations:
  - Two independent PWM outputs with single-edge operation
  - Two independent PWM outputs with dual-edge symmetric operation
  - One independent PWM output with dual-edge asymmetric operation
- Asynchronous override control of PWM signals through software.
- Programmable phase-control support for lag or lead operation relative to other ePWM modules.
- Hardware-locked (synchronized) phase relationship on a cycle-by-cycle basis.
- Dead-band generation with independent rising and falling edge delay control.
- Programmable trip zone allocation of both cycle-by-cycle trip and one-shot trip on fault conditions.
- A trip condition can force either high, low, or high-impedance state logic levels at PWM outputs.
- All events can trigger both CPU interrupts and ADC start of conversion (SOC)
- Programmable event prescaling minimizes CPU overhead on interrupts.
- PWM chopping by high-frequency carrier signal, useful for pulse transformer gate drives.

Each ePWM module is connected to the input/output signals shown in *Multiple ePWM Modules*. The signals are described in detail in subsequent sections.

Each ePWM module consists of eight submodules and is connected within a system via the signals shown in *Submodules and Signal Connections for an ePWM Module*.

Copyright © 2025 Texas Instruments Incorporated

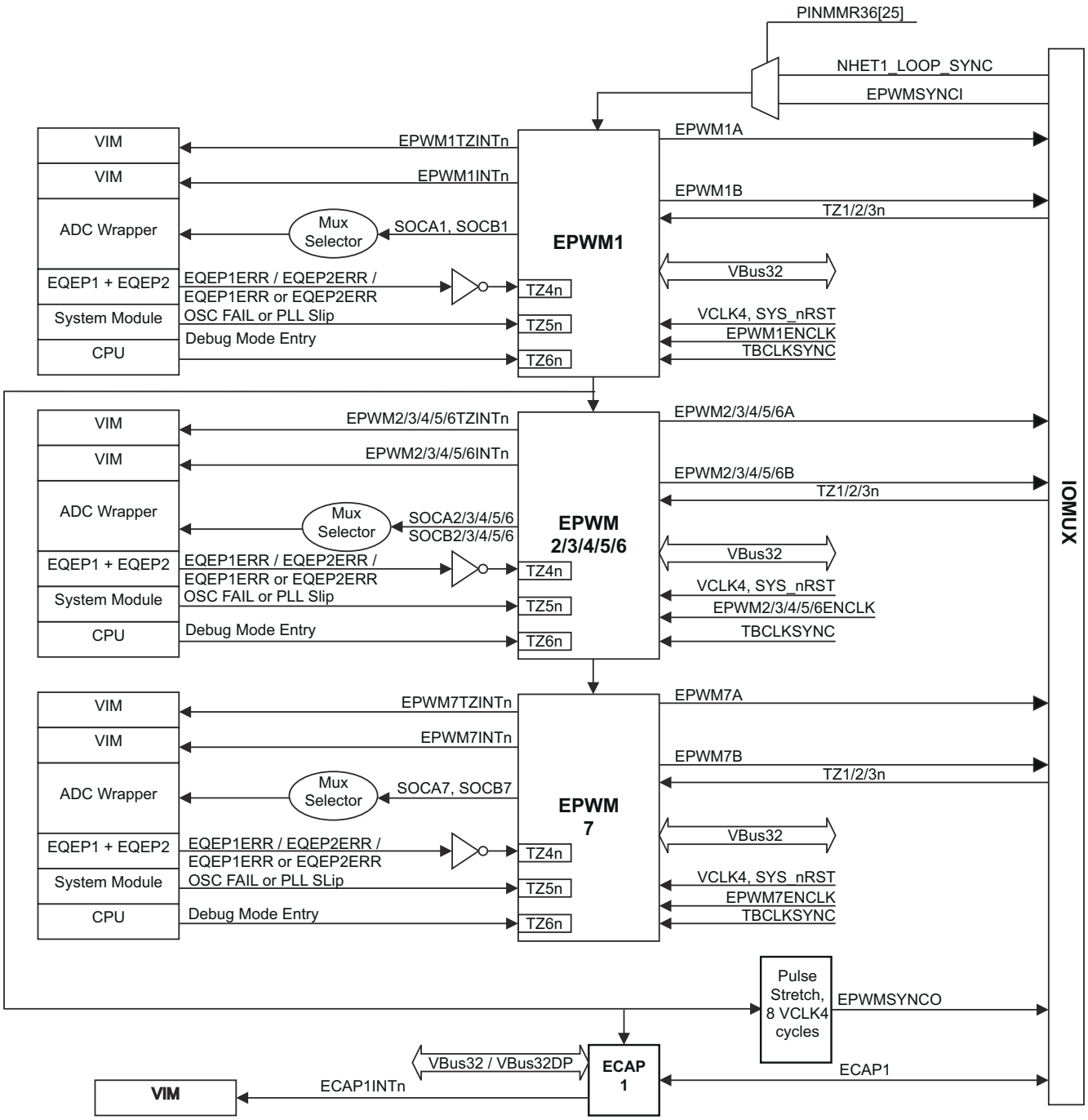

Figure 11-204. Multiple ePWM Modules

Copyright © 2025 Texas Instruments Incorporated

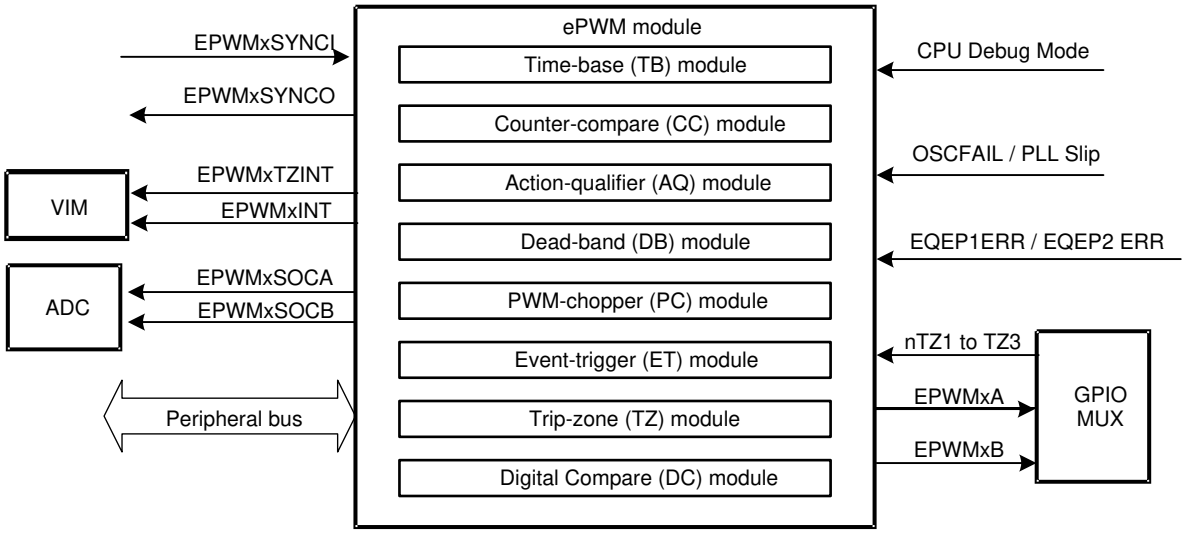

Figure 11-205. Submodules and Signal Connections for an ePWM Module

The main signals used by the ePWM module are:

- **PWM output signals .**

  The PWM output signals are made available external to the device through the Pinmux.
- **Trip-zone signals ($\overline{TZ1}$ to $\overline{TZ6}$).**

  These input signals alert the ePWM module of fault conditions external to the ePWM module. Each ePWM module can be configured to either use or ignore any of the trip-zone signals. The $\overline{TZ1}$ to $\overline{TZ3}$ trip-zone signals can be configured as asynchronous inputs, or double-synchronized using VCLK4, or double-synchronized and filtered through a 6-VCLK4-cycle counter before connecting to the ePWM modules. This selection is done by configuring registers in the Pinmux. $\overline{TZ4}$ is connected to an inverted eQEP1 error signal (EQEP1ERR), or to an inverted eQEP2 error signal (EQEP2ERR), or an OR-combination of EQEP1ERR and EQEP2ERR. This selection is also done via the Pinmux registers . $\overline{TZ5}$ is connected to the system clock fail status. This is asserted whenever an oscillator failure is detected, or a PLL slip is detected. $\overline{TZ6}$ is connected to the debug mode entry indicator output from the CPU. This allows you to configure a trip action when the CPU halts.
- **Time-base synchronization input (EPWMxSYNCI) and output (EPWMxSYNCO) signals**.

  The synchronization signals daisy chain the ePWM modules together. Each module can be configured to either use or ignore its synchronization input. The clock synchronization input and output signal are brought out to pins only for ePWM1 (ePWM module #1). The synchronization output for ePWM1 (EPWM1SYNCO) is also connected to the SYNCI of the first enhanced capture module (eCAP1).
- **ADC start-of-conversion signals (EPWMxSOCA and EPWMxSOCB).**

  Each ePWM module has two ADC start of conversion signals. Any ePWM module can trigger a start of conversion. Which event triggers the start of conversion is configured in the Event-Trigger submodule of the ePWM.
- **Peripheral Bus**

  The peripheral bus is 32-bits wide and allows both 16-bit and 32-bit writes to the ePWM register file.

Copyright © 2025 Texas Instruments Incorporated

11.4.2.1.2 Register Mapping

The complete ePWM module control and status register set is grouped by submodule as shown in Table 11-1158. Each register set is duplicated for each instance of the ePWM module. The start address for each ePWM register file instance on a device is specified in the specific part's datasheet.

Table 11-1158. ePWM Module Control and Status Register Set Grouped by Submodule

Name	Address Offset	Size (×16)	Shadow	Privileged Mode Write Only?	Description
Time-Base Submodule Registers					
TBCTL	0x0002	1	No	No	Time-Base Control Register
TBSTS	0x0000	1	No	No	Time-Base Status Register
Reserved	0x0006	1	–	–	Reserved
TBPHS	0x0004	1	No	No	Time-Base Phase Register
TBCTR	0x000A	1	No	No	Time-Base Counter Register
TBPRD	0x0008	1	Yes	No	Time-Base Period Register
Reserved	0x000E	1	–	–	Reserved
Counter-Compare Submodule Registers					
CMPCTL	0x000C	1	No	No	Counter-Compare Control Register
Reserved	0x0012	1	–	–	Reserved
CMPA	0x0010	1	Yes	No	Counter-Compare A Register
CMPB	0x0016	1	Yes	No	Counter-Compare B Register
Action-Qualifier Submodule Registers					
AQCTLA	0x0014	1	No	No	Action-Qualifier Control Register for Output A (EPWMx0)
AQCTLB	0x001A	1	No	No	Action-Qualifier Control Register for Output B (EPWMx1)
AQSFRC	0x0018	1	No	No	Action-Qualifier Software Force Register
AQCSFRC	0x001E	1	Yes	No	Action-Qualifier Continuous S/W Force Register Set
Dead-Band Generator Submodule Registers					
DBCTL	0x001C	1	No	No	Dead-Band Generator Control Register
DBRED	0x0022	1	No	No	Dead-Band Generator Rising Edge Delay Count Register
DBFED	0x0020	1	No	No	Dead-Band Generator Falling Edge Delay Count Register
Trip-Zone Submodule Registers					
TZSEL	0x0026	1	No	Yes	Trip-Zone Select Register
TZDCSEL	0x0024	1	No	Yes	Trip Zone Digital Compare Select Register
TZCTL	0x002A	1	No	Yes	Trip-Zone Control Register
TZEINT	0x0028	1	No	Yes	Trip-Zone Enable Interrupt Register
TZFLG	0x002E	1	No	No	Trip-Zone Flag Register
TZCLR	0x002C	1	No	Yes	Trip-Zone Clear Register
TZFRC	0x0032	1	No	Yes	Trip-Zone Force Register
Event-Trigger Submodule Registers					
ETSEL	0x0030	1	No	No	Event-Trigger Selection Register
ETPS	0x0036	1	No	No	Event-Trigger Pre-Scale Register
ETFLG	0x0034	1	No	No	Event-Trigger Flag Register
ETCLR	0x003A	1	No	No	Event-Trigger Clear Register
ETFRC	0x0038	1	No	No	Event-Trigger Force Register
PWM-Chopper Submodule Registers					
PCCTL	0x003E	1	No	No	PWM-Chopper Control Register

Copyright © 2025 Texas Instruments Incorporated

Table 11-1158. ePWM Module Control and Status Register Set Grouped by Submodule (continued)

Name	Address Offset	Size (×16)	Shadow	Privileged Mode Write Only?	Description
Digital Compare Event Registers					
DCTRIPSEL	0x0062	1	No	Yes	Digital Compare Trip Select Register
DCACTL	0x0060	1	No	Yes	Digital Compare A Control Register
DCBCTL	0x0066	1	No	Yes	Digital Compare B Control Register
DCFCTL	0x0064	1	No	Yes	Digital Compare Filter Control Register
DCCAPCTL	0x006A	1	No	Yes	Digital Compare Capture Control Register
DCFOFFSET	0x0068	1	Writes	No	Digital Compare Filter Offset Register
DCFOFFSETCNT	0x006E	1	No	No	Digital Compare Filter Offset Counter Register
DCFWINDOW	0x006C	1	No	No	Digital Compare Filter Window Register
DCFWINDOWCNT	0x0072	1	No	No	Digital Compare Filter Window Counter Register
DCCAP	0x0070	1	Yes	No	Digital Compare Counter Capture Register

11.4.2.2 ePWM Submodules

Eight submodules are included in every ePWM peripheral. Each of these submodules performs specific tasks that can be configured by software.

11.4.2.2.1 Overview

Table 11-1159 lists the eight key submodules together with a list of their main configuration parameters. For example, if you need to adjust or control the duty cycle of a PWM waveform, then you should see the counter-compare submodule in Section 11.4.2.2.3 for relevant details.

Table 11-1159. Submodule Configuration Parameters

Submodule	Configuration Parameter or Option
Time-base (TB)	• Scale the time-base clock (TBCLK) relative to the system clock (VCLK4). • Configure the PWM time-base counter (TBCTR) frequency or period. • Set the mode for the time-base counter: – count-up mode: used for asymmetric PWM – count-down mode: used for asymmetric PWM – count-up-and-down mode: used for symmetric PWM • Configure the time-base phase relative to another ePWM module. • Synchronize the time-base counter between modules through hardware or software. • Configure the direction (up or down) of the time-base counter after a synchronization event. • Configure how the time-base counter will behave when the device is halted by an emulator. • Specify the source for the synchronization output of the ePWM module: – Synchronization input signal – Time-base counter equal to zero – Time-base counter equal to counter-compare B (CMPB) – No output synchronization signal generated.
Counter-compare (CC)	• Specify the PWM duty cycle for output EPWMx0 and/or output EPWMx1 • Specify the time at which switching events occur on the EPWMx0 or EPWMx1 output

Copyright © 2025 Texas Instruments Incorporated

Table 11-1159. Submodule Configuration Parameters (continued)

Submodule	Configuration Parameter or Option
Action-qualifier (AQ)	• Specify the type of action taken when a time-base or counter-compare submodule event occurs: – No action taken – Output EPWMx0 and/or EPWMx1 switched high – Output EPWMx0 and/or EPWMx1 switched low – Output EPWMx0 and/or EPWMx1 toggled • Force the PWM output state through software control • Configure and control the PWM dead-band through software
Dead-band (DB)	• Control of traditional complementary dead-band relationship between upper and lower switches • Specify the output rising-edge-delay value • Specify the output falling-edge delay value • Bypass the dead-band module entirely. In this case the PWM waveform is passed through without modification. • Option to enable half-cycle clocking for double resolution.
PWM-chopper (PC)	• Create a chopping (carrier) frequency. • Pulse width of the first pulse in the chopped pulse train. • Duty cycle of the second and subsequent pulses. • Bypass the PWM-chopper module entirely. In this case the PWM waveform is passed through without modification.
Trip-zone (TZ)	• Configure the ePWM module to react to one, all, or none of the trip-zone signals or digital compare events. • Specify the tripping action taken when a fault occurs: – Force EPWMx0 and/or EPWMx1 high – Force EPWMx0 and/or EPWMx1 low – Force EPWMx0 and/or EPWMx1 to a high-impedance state – Configure EPWMx0 and/or EPWMx1 to ignore any trip condition. • Configure how often the ePWM will react to each trip-zone signal: – One-shot – Cycle-by-cycle • Enable the trip-zone to initiate an interrupt. • Bypass the trip-zone module entirely.
Event-trigger (ET)	• Enable the ePWM events that will trigger an interrupt. • Enable ePWM events that will trigger an ADC start-of-conversion event. • Specify the rate at which events cause triggers (every occurrence or every second or third occurrence) • Poll, set, or clear event flags
Digital-compare (DC)	• Enables trip zone signals to create events and filtered events • Specify event-filtering options to capture TBCTR counter or generate blanking window

Code examples are provided in the remainder of this document that show how to implement various ePWM module configurations. These examples use the constant definitions in the device *EPwm_defines.h* file in the device-specific header file and peripheral examples software package.

Copyright © 2025 Texas Instruments Incorporated

11.4.2.2.2 Time-Base (TB) Submodule

Each ePWM module has its own time-base submodule that determines all of the event timing for the ePWM module. Built-in synchronization logic allows the time-base of multiple ePWM modules to work together as a single system. Figure 11-206 illustrates the time-base module's place within the ePWM.

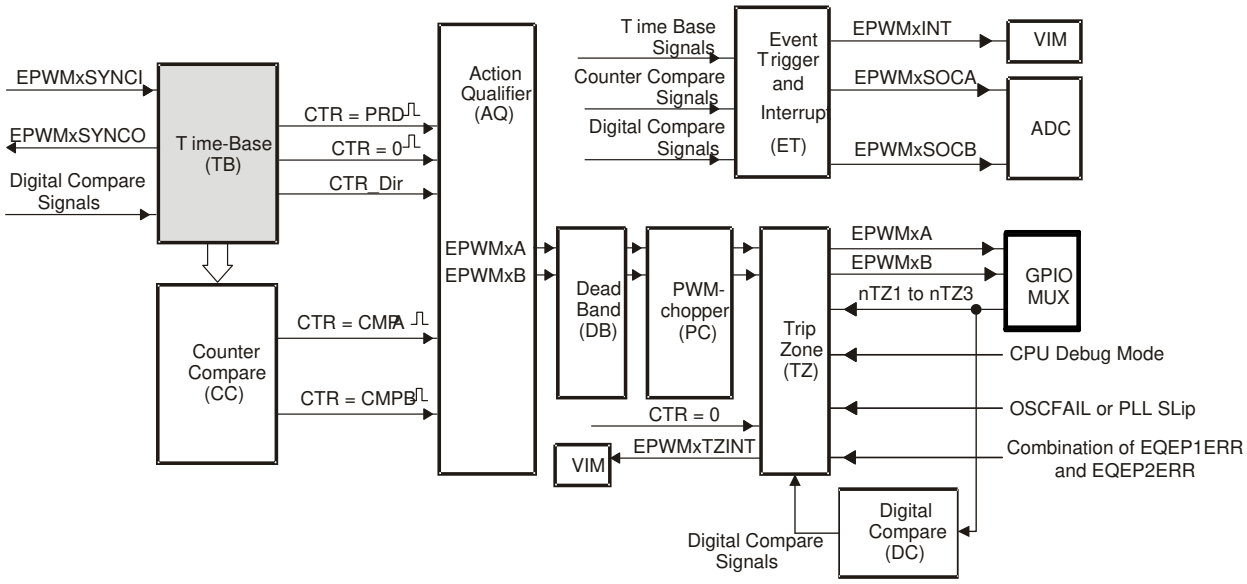

Figure 11-206. Time-Base Submodule Block Diagram

11.4.2.2.2.1 Purpose of the Time-Base Submodule

You can configure the time-base submodule for the following:

- Specify the ePWM time-base counter (TBCTR) frequency or period to control how often events occur.
- Manage time-base synchronization with other ePWM modules.
- Maintain a phase relationship with other ePWM modules.
- Set the time-base counter to count-up, count-down, or count-up-and-down mode.
- Generate the following events:
  - CTR = PRD: Time-base counter equal to the specified period (TBCTR = TBPRD) .
  - CTR = Zero: Time-base counter equal to zero (TBCTR = 0x0000).
- Configure the rate of the time-base clock; a prescaled version of the device peripheral clock domain (VCLK4). This allows the time-base counter to increment/decrement at a slower rate.

Copyright © 2025 Texas Instruments Incorporated

11.4.2.2.2.2 Controlling and Monitoring the Time-base Submodule

Table 11-1160 shows the registers used to control and monitor the time-base submodule.

Table 11-1160. Time-Base Submodule Registers

Register Name	Address Offset	Shadowed	Description
TBCTL	0x0002	No	Time-Base Control Register
TBSTS	0x0000	No	Time-Base Status Register
TBPHS	0x0004	No	Time-Base Phase Register
TBCTR	0x000A	No	Time-Base Counter Register
TBPRD	0x0008	Yes	Time-Base Period Register

The block diagram in Figure 11-207 shows the critical signals and registers of the time-base submodule. Table 11-1161 provides descriptions of the key signals associated with the time-base submodule.

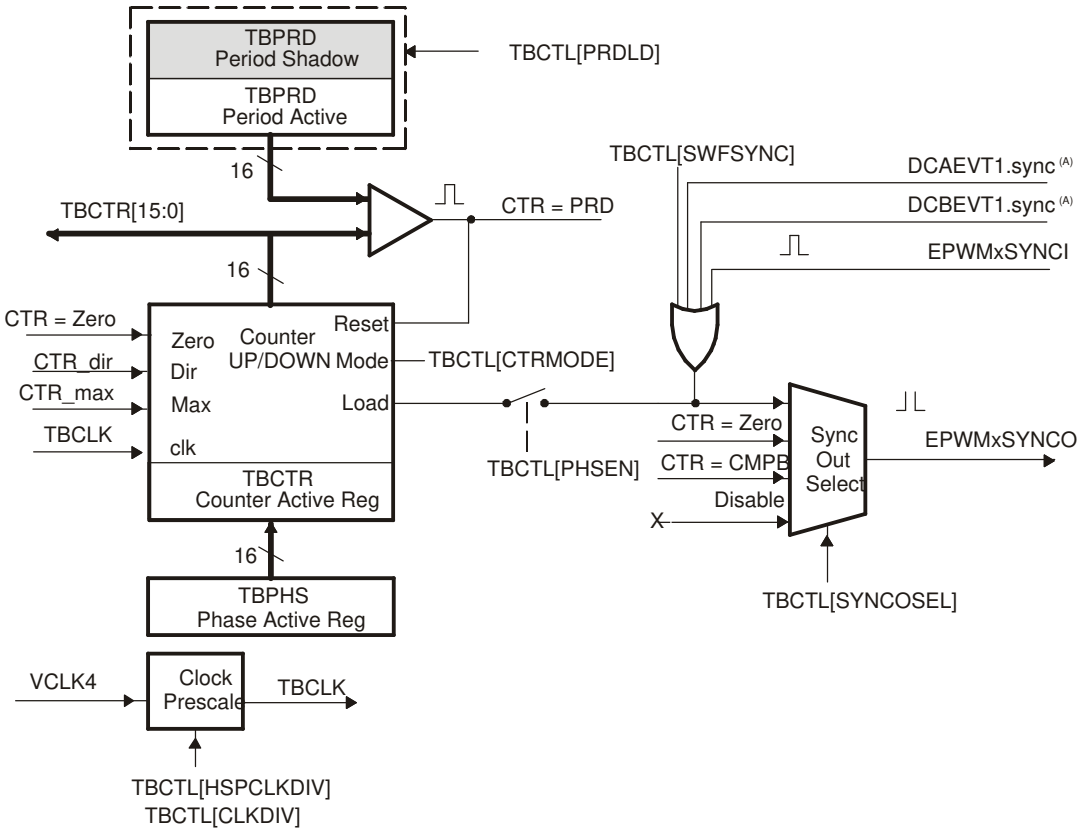

A. These signals are generated by the digital compare (DC) submodule.

Figure 11-207. Time-Base Submodule Signals and Registers

Copyright © 2025 Texas Instruments Incorporated

Table 11-1161. Key Time-Base Signals

Signal	Description
EPWMxSYNCI	Time-base synchronization input. Input pulse used to synchronize the time-base counter with the counter of ePWM module earlier in the synchronization chain. An ePWM peripheral can be configured to use or ignore this signal. For the first ePWM module (EPWMA), this signal comes from a device pin or from the N2HET1 module. For subsequent ePWM modules, this signal is passed from another ePWM peripheral. For example, EPWM2SYNCI is generated by the ePWMA peripheral, EPWM3SYNCI is generated by ePWM2Band so forth. See *Time-Base Counter Synchronization* for information on the synchronization order of a particular device.
EPWMxSYNCO	Time-base synchronization output. This output pulse is used to synchronize the counter of an ePWM module later in the synchronization chain. The ePWM module generates this signal from one of three event sources: 1. EPWMxSYNCI (Synchronization input pulse) 2. CTR = Zero: The time-base counter equal to zero (TBCTR = 0x0000). 3. CTR = CMPB: The time-base counter equal to the counter-compare B (TBCTR = CMPB) register.
CTR = PRD	Time-base counter equal to the specified period. This signal is generated whenever the counter value is equal to the active period register value. That is when TBCTR = TBPRD.
CTR = Zero	Time-base counter equal to zero This signal is generated whenever the counter value is zero. That is when TBCTR equals 0x0000.
CTR = CMPB	Time-base counter equal to active counter-compare B register (TBCTR = CMPB). This event is generated by the counter-compare submodule and used by the synchronization out logic
CTR_dir	Time-base counter direction. Indicates the current direction of the ePWM's time-base counter. This signal is high when the counter is increasing and low when it is decreasing.
CTR_max	Time-base counter equal max value. (TBCTR = 0xFFFF) Generated event when the TBCTR value reaches its maximum value. This signal is only used only as a status bit
TBCLK	Time-base clock. This is a prescaled version of the system clock (VCLK4) and is used by all submodules within the ePWM. This clock determines the rate at which time-base counter increments or decrements.

Copyright © 2025 Texas Instruments Incorporated

11.4.2.2.2.3 Calculating PWM Period and Frequency

The frequency of PWM events is controlled by the time-base period (TBPRD) register and the mode of the time-base counter. Figure 11-208 shows the period (T_{pwm}) and frequency (F_{pwm}) relationships for the up-count, down-count, and up-down-count time-base counter modes when the period is set to 4 (TBPRD = 4). The time increment for each step is defined by the time-base clock (TBCLK) which is a prescaled version of the system clock (VCLK4).

The time-base counter has three modes of operation selected by the time-base control register (TBCTL):

- **Up-Down-Count Mode:**

  In up-down-count mode, the time-base counter starts from zero and increments until the period (TBPRD) value is reached. When the period value is reached, the time-base counter then decrements until it reaches zero. At this point the counter repeats the pattern and begins to increment.
- **Up-Count Mode:**

  In this mode, the time-base counter starts from zero and increments until it reaches the value in the period register (TBPRD). When the period value is reached, the time-base counter resets to zero and begins to increment once again.
- **Down-Count Mode:**

  In down-count mode, the time-base counter starts from the period (TBPRD) value and decrements until it reaches zero. When it reaches zero, the time-base counter is reset to the period value and it begins to decrement once again.

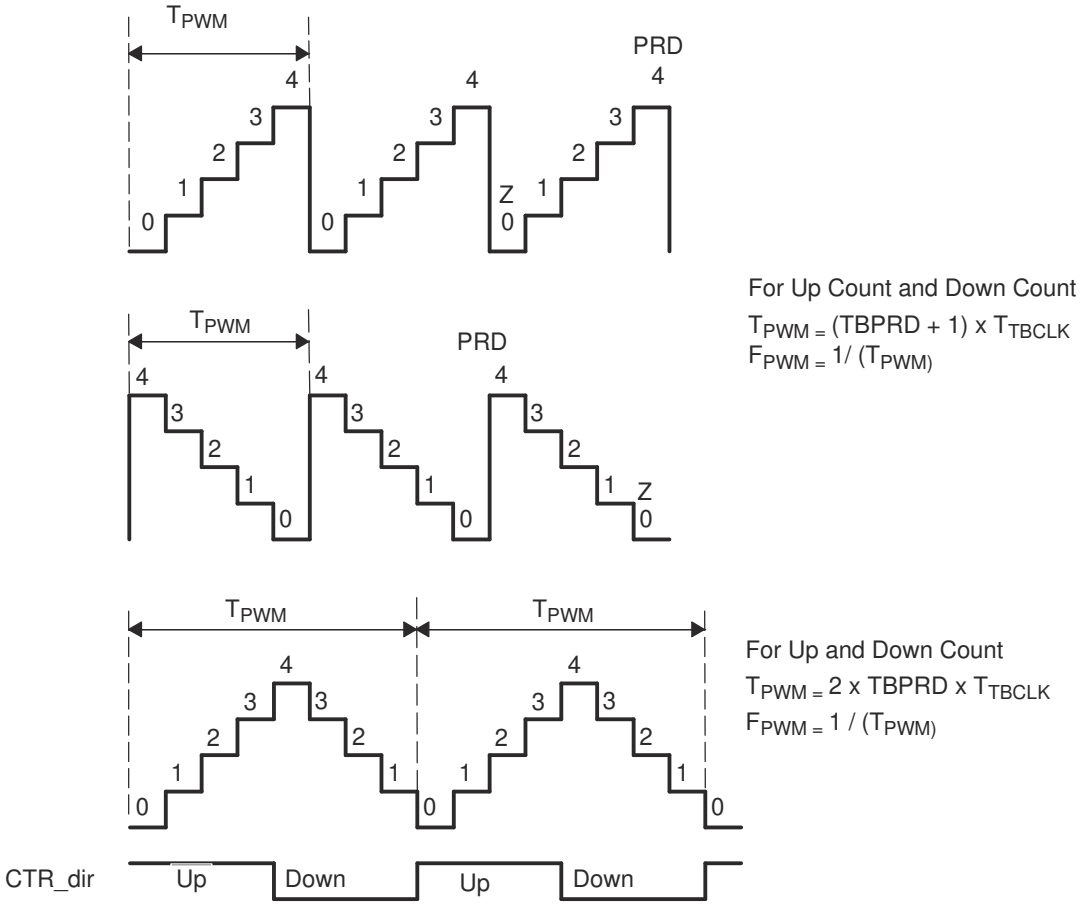

Figure 11-208. Time-Base Frequency and Period

Copyright © 2025 Texas Instruments Incorporated

11.4.2.2.2.3.1 Time-Base Period Shadow Register

The time-base period register (TBPRD) has a shadow register. Shadowing allows the register update to be synchronized with the hardware. The following definitions are used to describe all shadow registers in the ePWM module:

- **Active Register**

  The active register controls the hardware and is responsible for actions that the hardware causes or invokes.
- **Shadow Register**

  The shadow register buffers or provides a temporary holding location for the active register. It has no direct effect on any control hardware. At a strategic point in time the shadow register's content is transferred to the active register. This prevents corruption or spurious operation due to the register being asynchronously modified by software.

The memory address of the shadow period register is the same as the active register. Which register is written to or read from is determined by the TBCTL[PRDLD] bit. This bit enables and disables the TBPRD shadow register as follows:

- **Time-Base Period Shadow Mode:**

  The TBPRD shadow register is enabled when TBCTL[PRDLD] = 0. Reads from and writes to the TBPRD memory address go to the shadow register. The shadow register contents are transferred to the active register (TBPRD (Active) ← TBPRD (shadow)) when the time-base counter equals zero (TBCTR = 0x0000). By default the TBPRD shadow register is enabled.
- **Time-Base Period Immediate Load Mode:**

  If immediate load mode is selected (TBCTL[PRDLD] = 1), then a read from or a write to the TBPRD memory address goes directly to the active register.

11.4.2.2.2.3.2 Time-Base Clock Synchronization

Bit 1 of the device-level multiplexing control module (Pinmux) register PINMMR37 is defined as the TBCLKSYNC bit. The TBCLKSYNC bit allows users to globally synchronize all enabled ePWM modules to the time-base clock (TBCLK). When set, all enabled ePWM module clocks are started with the first rising edge of TBCLK aligned. For perfectly synchronized TBCLKs, the prescalers for each ePWM module must be set identically.

The proper procedure for enabling ePWM clocks is as follows:

1. Enable ePWM module clocks using the Pinmux control registers for each ePWM module instance
2. Set TBCLKSYNC = 0. This will stop the time-base clock within any enabled ePWM module.
3. Configure ePWM modules: prescaler values and ePWM modes.
4. Set TBCLKSYNC = 1.

Copyright © 2025 Texas Instruments Incorporated

11.4.2.2.2.3.3 Time-Base Counter Synchronization

A time-base synchronization scheme connects all of the ePWM modules on a device. Each ePWM module has a synchronization input (EPWMxSYNCI) and a synchronization output (EPWMxSYNCO). The input synchronization for the first instance (ePWMA) comes from an external pin. The synchronization connections for the remaining ePWM modules are shown in Figure 11-209.

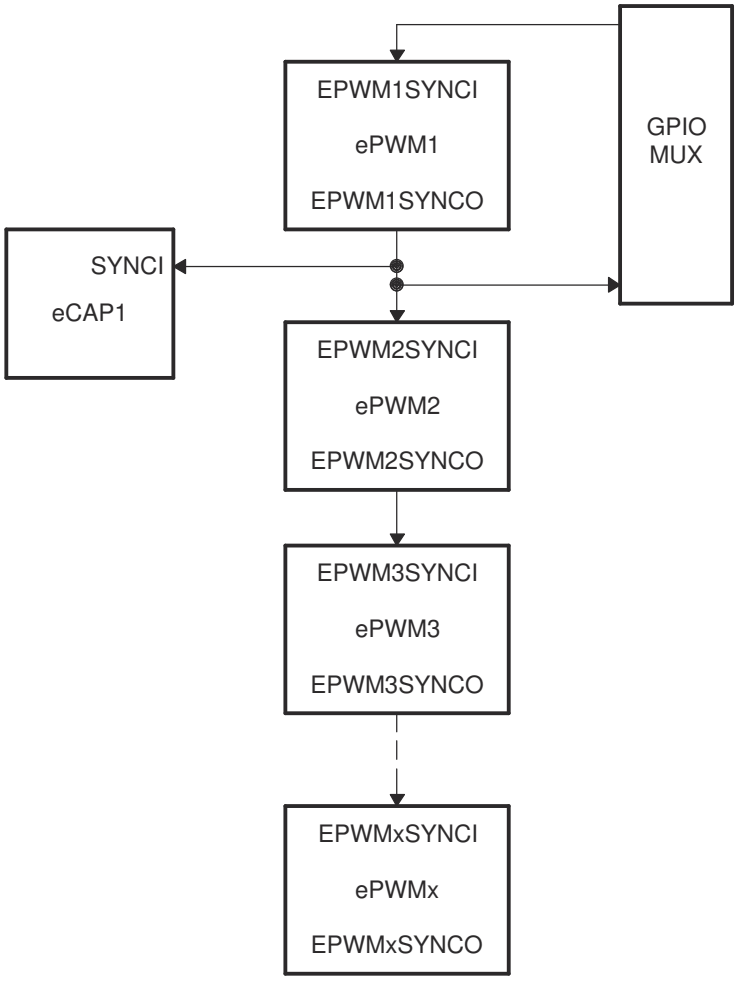

Figure 11-209. Time-Base Counter Synchronization Scheme

Copyright © 2025 Texas Instruments Incorporated

Each ePWM module can be configured to use or ignore the synchronization input. If the TBCTL[PHSEN] bit is set, then the time-base counter (TBCTR) of the ePWM module will be automatically loaded with the phase register (TBPHS) contents when one of the following conditions occur:

- **EPWMxSYNCI: Synchronization Input Pulse:**

  The value of the phase register is loaded into the counter register when an input synchronization pulse is detected (TBPHS → TBCTR). This operation occurs on the next valid time-base clock (TBCLK) edge.

  The delay from internal controller module to target modules is given by:
  - if (TBCLK = VCLK4): 2 × VCLK4
  - if (TBCLK != VCLK4): 1 TBCLK
- **Software Forced Synchronization Pulse:**

  Writing a 1 to the TBCTL[SWFSYNC] control bit invokes a software forced synchronization. This pulse is ORed with the synchronization input signal, and therefore has the same effect as a pulse on EPWMxSYNCI.
- **Digital Compare Event Synchronization Pulse:**

  DCAEVT1 and DCBEVT1 digital compare events can be configured to generate synchronization pulses which have the same affect as EPWMxSYNCI.

This feature enables the ePWM module to be automatically synchronized to the time base of another ePWM module. Lead or lag phase control can be added to the waveforms generated by different ePWM modules to synchronize them. In up-down-count mode, the TBCTL[PSHDIR] bit configures the direction of the time-base counter immediately after a synchronization event. The new direction is independent of the direction prior to the synchronization event. The PHSDIR bit is ignored in count-up or count-down modes. See Figure 11-210 through Figure 11-213 for examples.

Clearing the TBCTL[PHSEN] bit configures the ePWM to ignore the synchronization input pulse. The synchronization pulse can still be allowed to flow-through to the EPWMxSYNCO and be used to synchronize other ePWM modules. In this way, you can set up a controller time-base (for example, ePWMA) and downstream modules (ePWMB - ePWMx) may elect to run in synchronization with the controller.

11.4.2.2.2.4 Phase Locking the Time-Base Clocks of Multiple ePWM Modules

The TBCLKSYNC bit can be used to globally synchronize the time-base clocks of all enabled ePWM modules on a device. When TBCLKSYNC = 0, the time-base clock of all ePWM modules is stopped (default). When TBCLKSYNC = 1, all ePWM time-base clocks are started with the rising edge of TBCLK aligned. For perfectly synchronized TBCLKs, the prescaler bits in the TBCTL register of each ePWM module must be set identically. The proper procedure for enabling the ePWM clocks is as follows:

1. Enable ePWM module clocks using the IOMM control registers for each ePWM module instance
2. Set TBCLKSYNC = 0. This will stop the time-base clock within any enabled ePWM module.
3. Configure ePWM modules: prescaler values and ePWM modes.
4. Set TBCLKSYNC = 1.

Copyright © 2025 Texas Instruments Incorporated

11.4.2.2.2.5 Time-Base Counter Modes and Timing Waveforms

The time-base counter operates in one of four modes:

- Up-count mode which is asymmetrical.
- Down-count mode which is asymmetrical.
- Up-down-count which is symmetrical
- Frozen where the time-base counter is held constant at the current value

To illustrate the operation of the first three modes, the following timing diagrams show when events are generated and how the time-base responds to an EPWMxSYNCI signal.

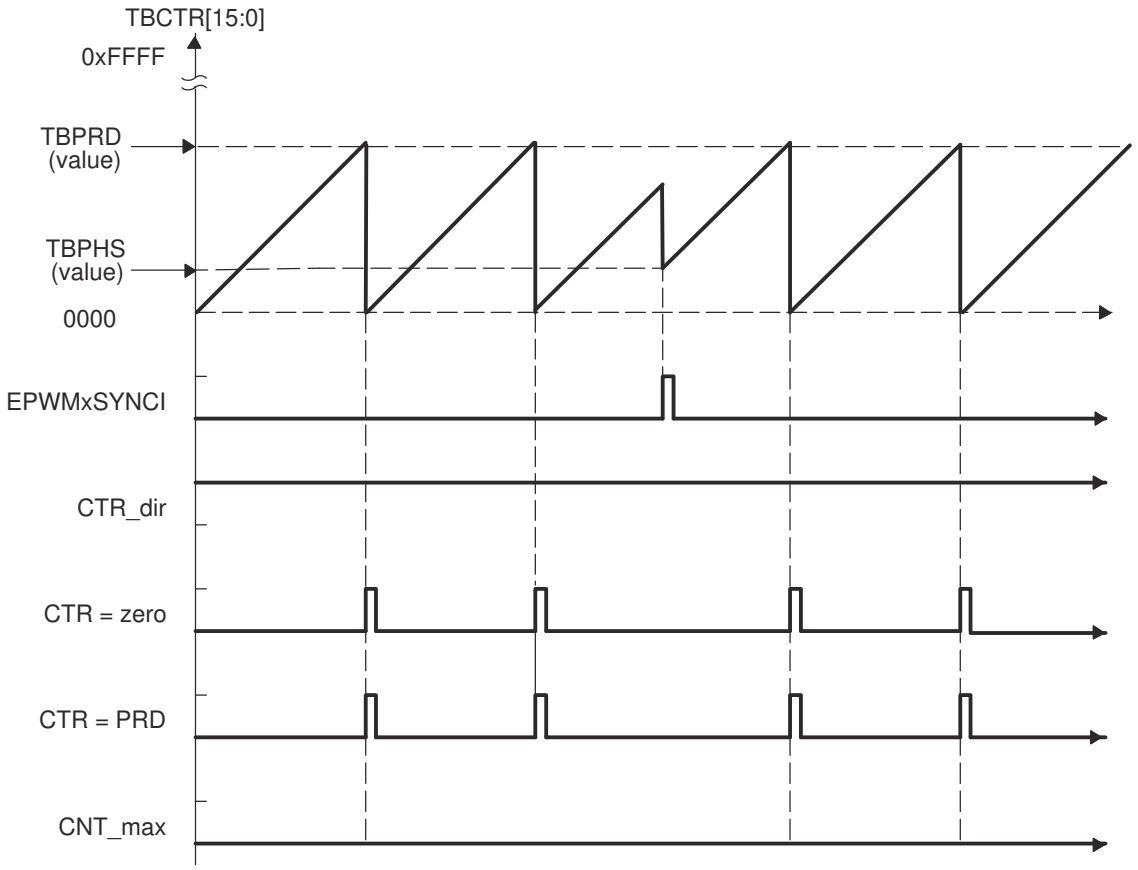

Figure 11-210. Time-Base Up-Count Mode Waveforms

Copyright © 2025 Texas Instruments Incorporated

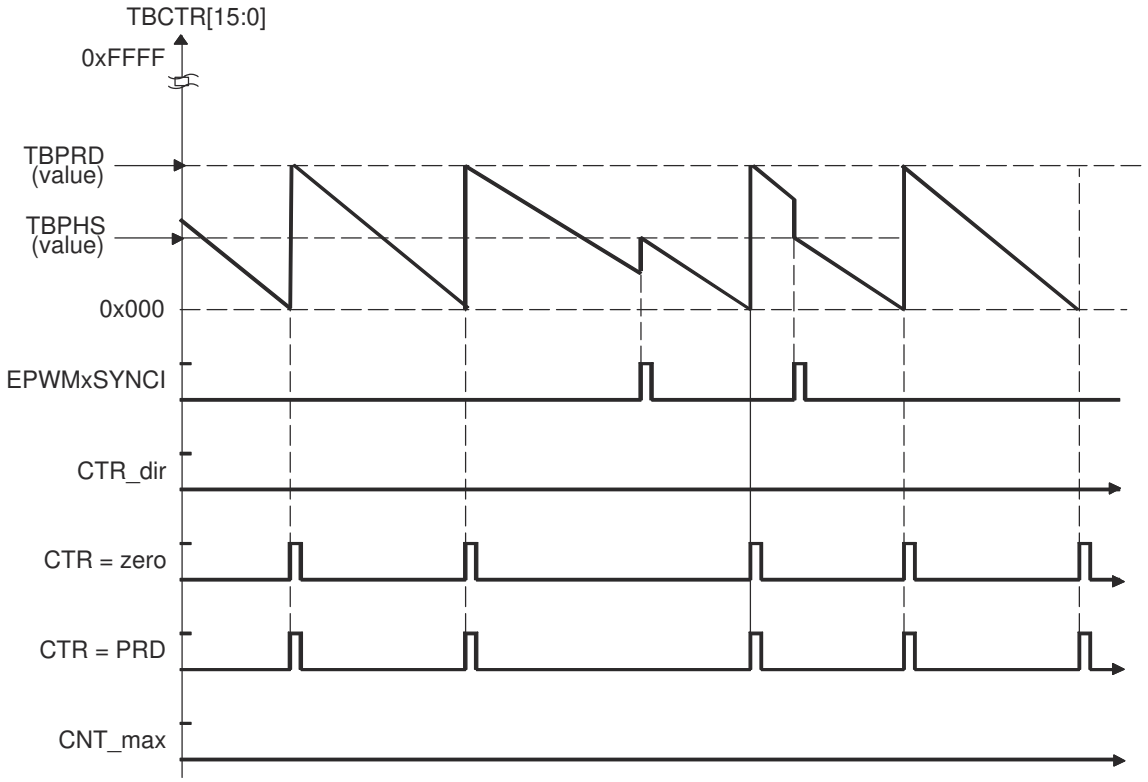

Figure 11-211. Time-Base Down-Count Mode Waveforms

Copyright © 2025 Texas Instruments Incorporated

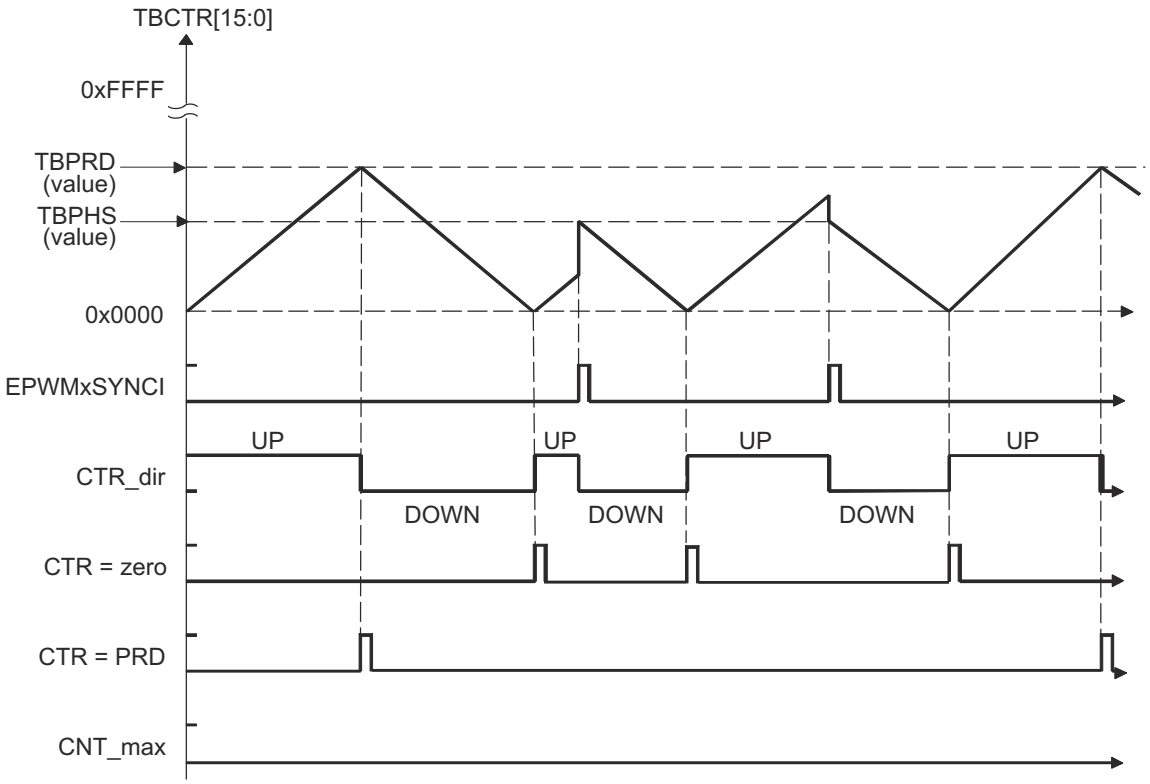

Figure 11-212. Time-Base Up-Down-Count Waveforms, TBCTL[PHSDIR = 0] Count Down On Synchronization Event

Copyright © 2025 Texas Instruments Incorporated

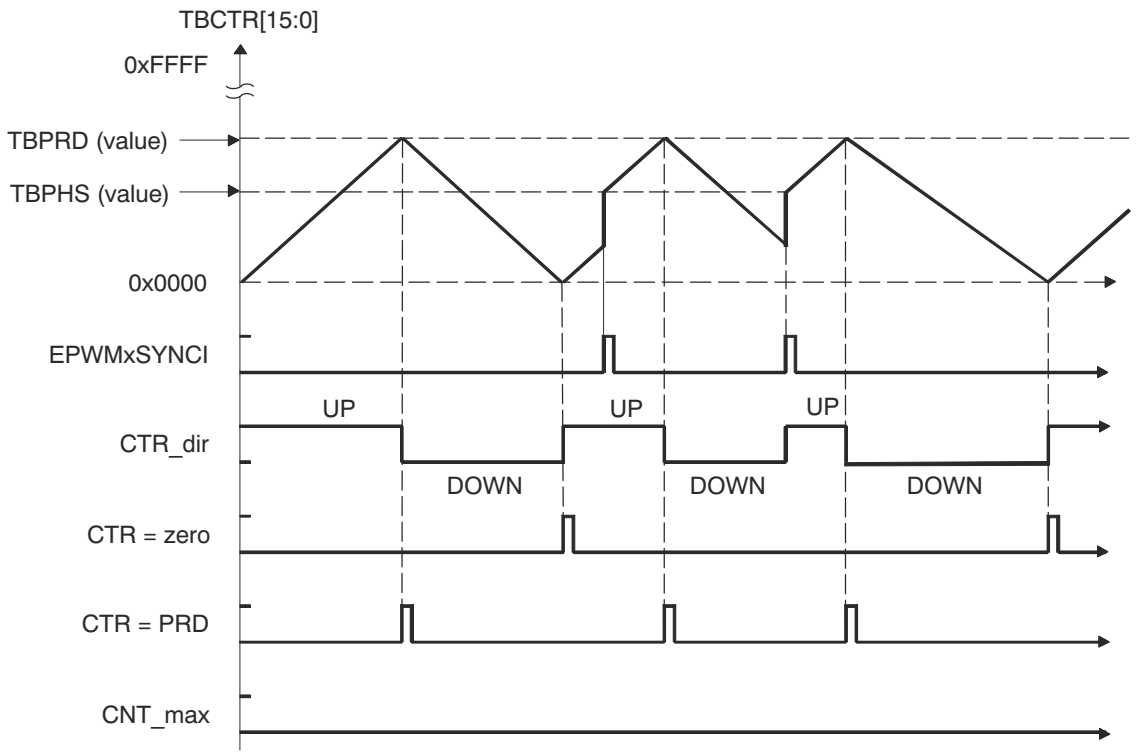

Figure 11-213. Time-Base Up-Down Count Waveforms, TBCTL[PHSDIR = 1] Count Up On Synchronization Event

Copyright © 2025 Texas Instruments Incorporated

11.4.2.2.3 Counter-Compare (CC) Submodule

Figure 11-214 illustrates the counter-compare submodule within the ePWM.

Figure 11-215 shows the basic structure of the counter-compare submodule.

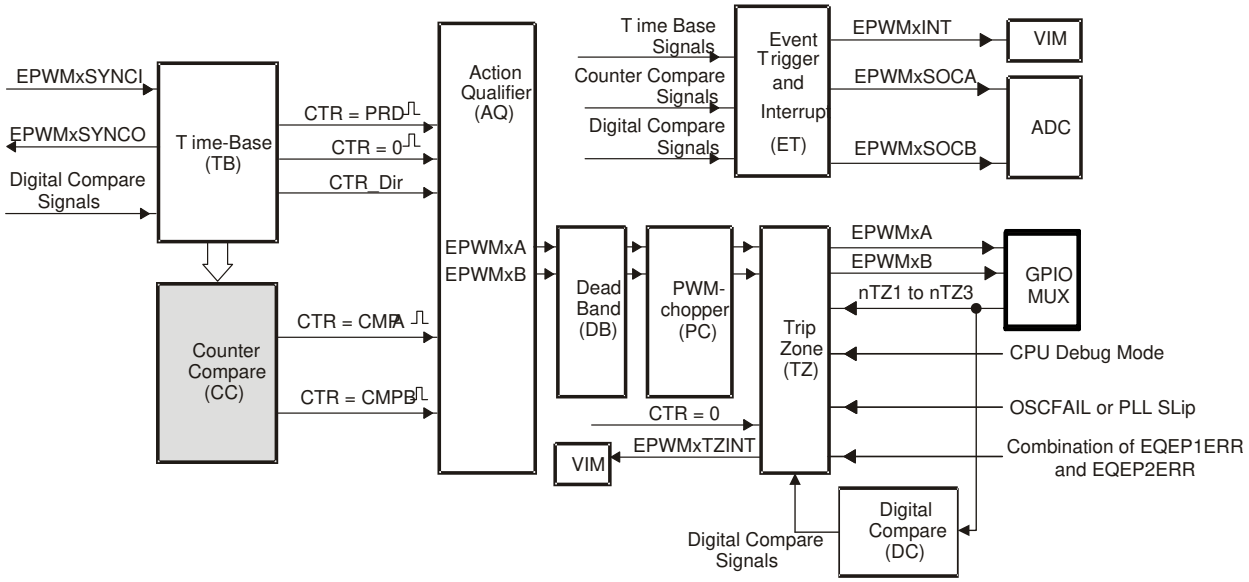

Figure 11-214. Counter-Compare Submodule

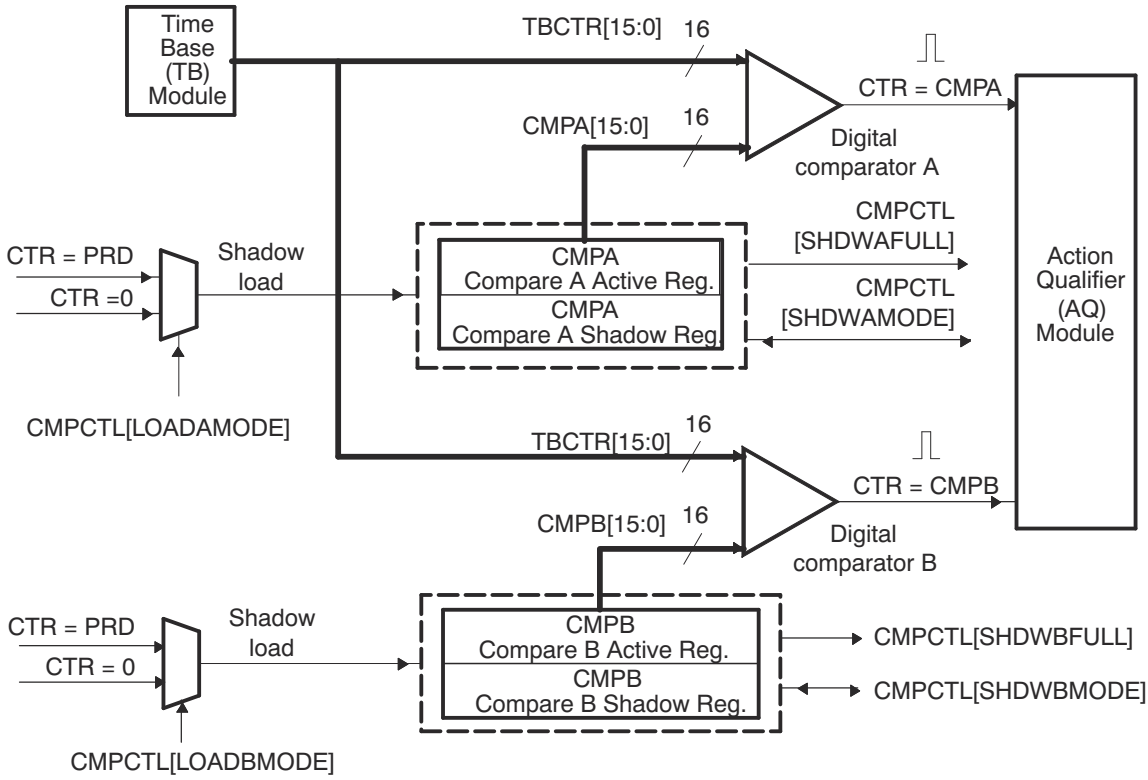

Figure 11-215. Detailed View of the Counter-Compare Submodule

Copyright © 2025 Texas Instruments Incorporated

11.4.2.2.3.1 Purpose of the Counter-Compare Submodule

The counter-compare submodule takes as input the time-base counter value. This value is continuously compared to the counter-compare A (CMPA) and counter-compare B (CMPB) registers. When the time-base counter is equal to one of the compare registers, the counter-compare unit generates an appropriate event.

The counter-compare:

- Generates events based on programmable time stamps using the CMPA and CMPB registers
  - CTR = CMPA: Time-base counter equals counter-compare A register (TBCTR = CMPA).
  - CTR = CMPB: Time-base counter equals counter-compare B register (TBCTR = CMPB)
- Controls the PWM duty cycle if the action-qualifier submodule is configured appropriately
- Shadows new compare values to prevent corruption or glitches during the active PWM cycle

11.4.2.2.3.2 Controlling and Monitoring the Counter-Compare Submodule

The counter-compare submodule operation is controlled and monitored by the registers shown in Table 11-1162:

Table 11-1162. Counter-Compare Submodule Registers

Register Name	Address Offset	Shadowed	Description
CMPCTL	0x000C	No	Counter-Compare Control Register.
CMPA	0x0010	Yes	Counter-Compare A Register
CMPB	0x0016	Yes	Counter-Compare B Register

The key signals associated with the counter-compare submodule are described in Table 11-1163.

Table 11-1163. Counter-Compare Submodule Key Signals

Signal	Description of Event	Registers Compared
CTR = CMPA	Time-base counter equal to the active counter-compare A value	TBCTR = CMPA
CTR = CMPB	Time-base counter equal to the active counter-compare B value	TBCTR = CMPB
CTR = PRD	Time-base counter equal to the active period. Used to load active counter-compare A and B registers from the shadow register	TBCTR = TBPRD
CTR = ZERO	Time-base counter equal to zero. Used to load active counter-compare A and B registers from the shadow register	TBCTR = 0x0000

Copyright © 2025 Texas Instruments Incorporated

11.4.2.2.3.3 Operational Highlights for the Counter-Compare Submodule

The counter-compare submodule is responsible for generating two independent compare events based on two compare registers:

1. CTR = CMPA: Time-base counter equal to counter-compare A register (TBCTR = CMPA).
2. CTR = CMPB: Time-base counter equal to counter-compare B register (TBCTR = CMPB).

For up-count or down-count mode, each event occurs only once per cycle. For up-down-count mode each event occurs twice per cycle if the compare value is between 0x0000-TBPRD and once per cycle if the compare value is equal to 0x0000 or equal to TBPRD. These events are fed into the action-qualifier submodule where they are qualified by the counter direction and converted into actions if enabled. Refer to Section 11.4.2.2.4.1 for more details.

The counter-compare registers CMPA and CMPB each have an associated shadow register. Shadowing provides a way to keep updates to the registers synchronized with the hardware. When shadowing is used, updates to the active registers only occur at strategic points. This prevents corruption or spurious operation due to the register being asynchronously modified by software. The memory address of the active register and the shadow register is identical. Which register is written to or read from is determined by the CMPCTL[SHDWAMODE] and CMPCTL[SHDWBMODE] bits. These bits enable and disable the CMPA shadow register and CMPB shadow register respectively. The behavior of the two load modes is as described:

Shadow Mode:

The shadow mode for the CMPA is enabled by clearing the CMPCTL[SHDWAMODE] bit and the shadow register for CMPB is enabled by clearing the CMPCTL[SHDWBMODE] bit. Shadow mode is enabled by default for both CMPA and CMPB.

If the shadow register is enabled then the content of the shadow register is transferred to the active register on one of the following events as specified by the CMPCTL[LOADAMODE] and CMPCTL[LOADBMODE] register bits:

- CTR = PRD: Time-base counter equal to the period (TBCTR = TBPRD).
- CTR = Zero: Time-base counter equal to zero (TBCTR = 0x0000)
- Both CTR = PRD and CTR = Zero

Only the active register contents are used by the counter-compare submodule to generate events to be sent to the action-qualifier.

Immediate Load Mode:

If immediate load mode is selected (that is, TBCTL[SHADWAMODE] = 1 or TBCTL[SHADWBMODE] = 1), then a read from or a write to the register will go directly to the active register.

Copyright © 2025 Texas Instruments Incorporated

11.4.2.2.3.4 Count Mode Timing Waveforms

The counter-compare module can generate compare events in all three count modes:

- Up-count mode: used to generate an asymmetrical PWM waveform.
- Down-count mode: used to generate an asymmetrical PWM waveform.
- Up-down-count mode: used to generate a symmetrical PWM waveform.

To best illustrate the operation of the first three modes, the timing diagrams in Figure 11-216 through Figure 11-219 show when events are generated and how the EPWMxSYNCI signal interacts.

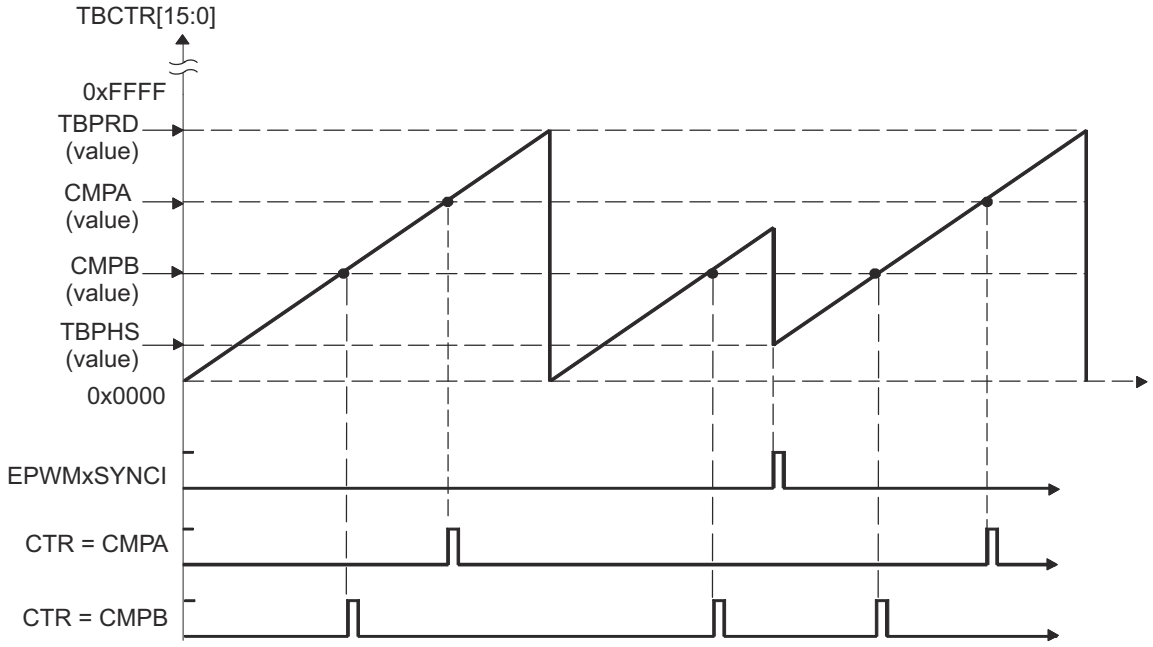

An EPWMxSYNCI external synchronization event can cause a discontinuity in the TBCTR count sequence. This can lead to a compare event being skipped. This skipping is considered normal operation and must be taken into account.

Figure 11-216. Counter-Compare Event Waveforms in Up-Count Mode

Copyright © 2025 Texas Instruments Incorporated

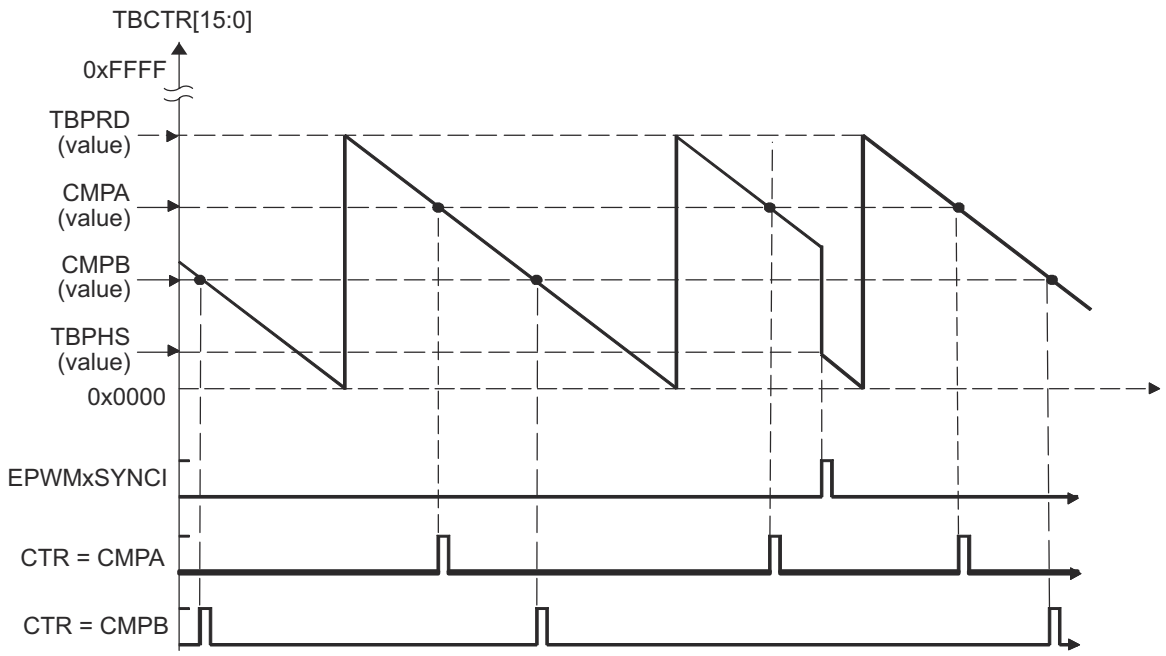

Figure 11-217. Counter-Compare Events in Down-Count Mode

Copyright © 2025 Texas Instruments Incorporated

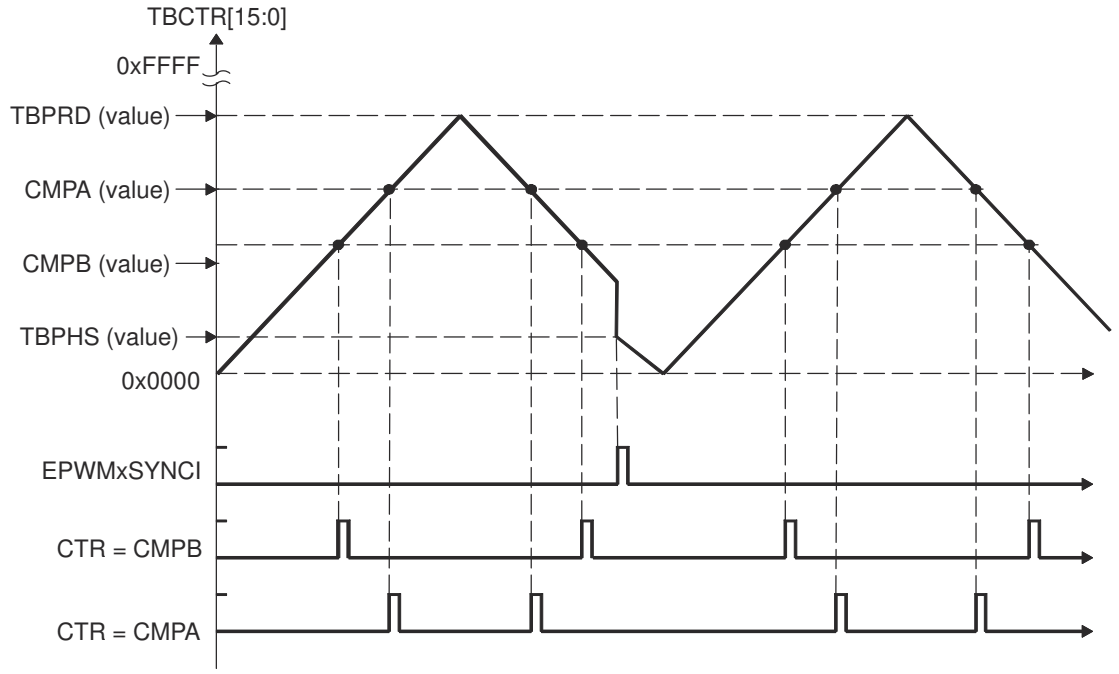

Figure 11-218. Counter-Compare Events In Up-Down-Count Mode, TBCTL[PHSDIR = 0] Count Down On Synchronization Event

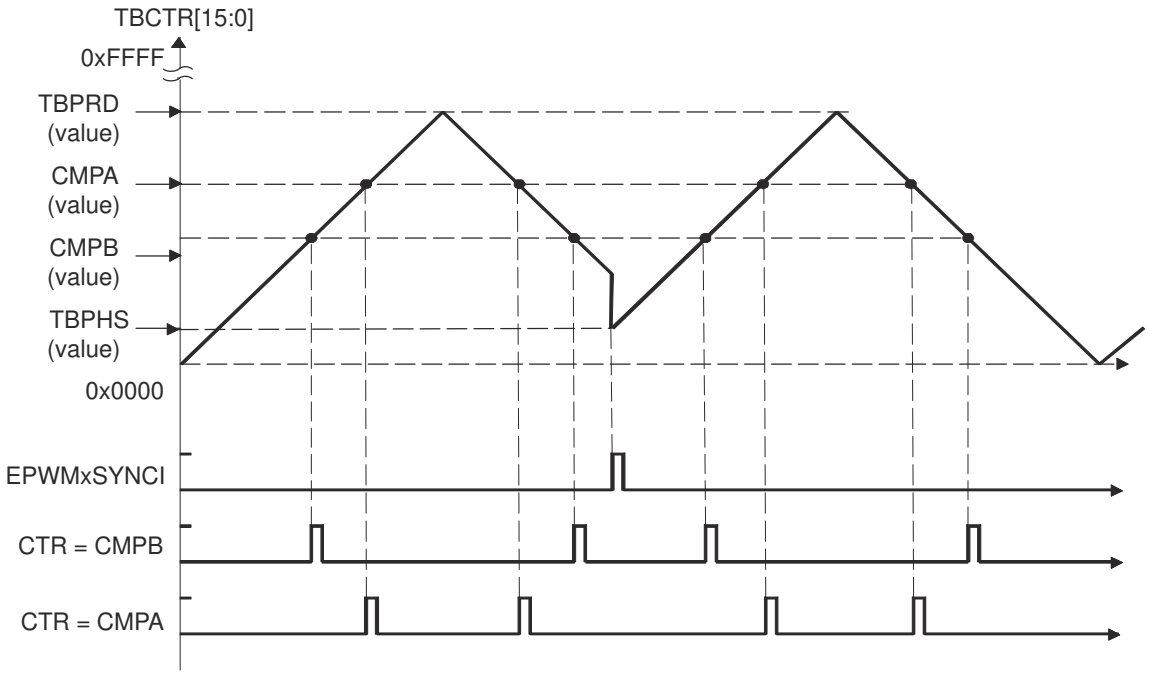

Figure 11-219. Counter-Compare Events In Up-Down-Count Mode, TBCTL[PHSDIR = 1] Count Up On Synchronization Event

Copyright © 2025 Texas Instruments Incorporated

11.4.2.2.4 Action-Qualifier (AQ) Submodule

Figure 11-220 shows the action-qualifier (AQ) submodule (see shaded block) in the ePWM system.

The action-qualifier submodule has the most important role in waveform construction and PWM generation. It decides which events are converted into various action types, thereby producing the required switched waveforms at the EPWMx0 and EPWMx1 outputs.

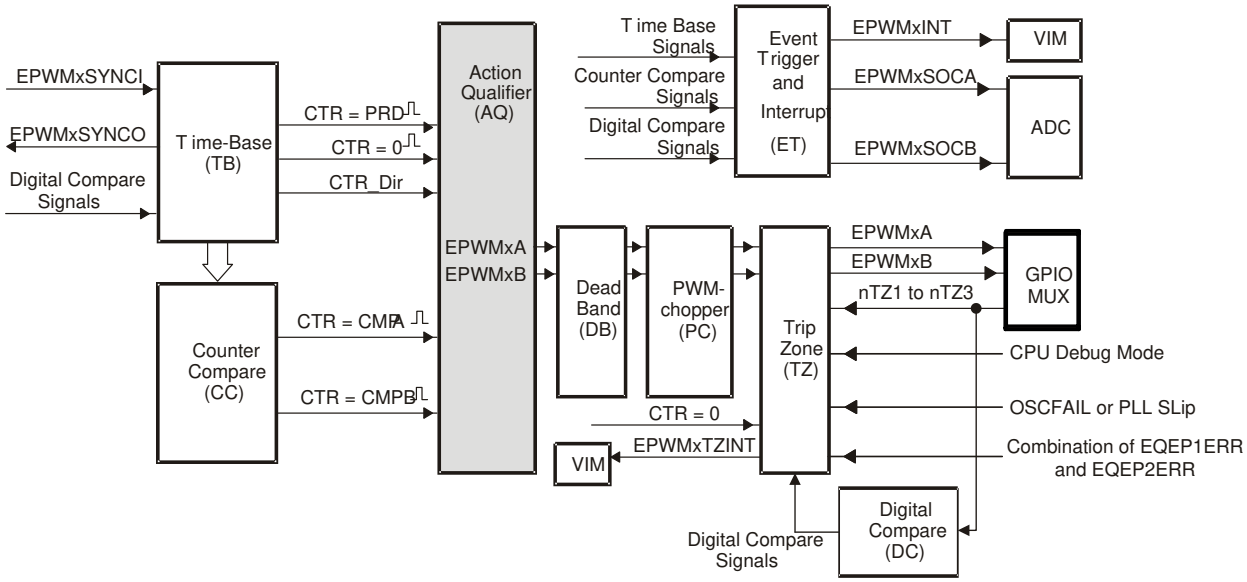

Figure 11-220. Action-Qualifier Submodule

11.4.2.2.4.1 Purpose of the Action-Qualifier Submodule

The action-qualifier submodule is responsible for the following:

- Qualifying and generating actions (set, clear, toggle) based on the following events:
  - CTR = PRD: Time-base counter equal to the period (TBCTR = TBPRD)
  - CTR = Zero: Time-base counter equal to zero (TBCTR = 0x0000)
  - CTR = CMPA: Time-base counter equal to the counter-compare A register (TBCTR = CMPA)
  - CTR = CMPB: Time-base counter equal to the counter-compare B register (TBCTR = CMPB)
- Managing priority when these events occur concurrently
- Providing independent control of events when the time-base counter is increasing and when it is decreasing

11.4.2.2.4.2 Action-Qualifier Submodule Control and Status Register Definitions

The action-qualifier submodule operation is controlled and monitored via the registers in Table 11-1164.

Table 11-1164. Action-Qualifier Submodule Registers

Register Name	Address Offset	Shadowed	Description
AQCTLA	0x0014	No	Action-Qualifier Control Register For Output A (EPWMx0)
AQCTLB	0x001A	No	Action-Qualifier Control Register For Output B (EPWMx1)
AQSFRC	0x0018	No	Action-Qualifier Software Force Register
AQCSFRC	0x001E	Yes	Action-Qualifier Continuous Software Force

The action-qualifier submodule is based on event-driven logic. It can be thought of as a programmable cross switch with events at the input and actions at the output, all of which are software controlled via the set of registers shown in Table 11-1164.

Copyright © 2025 Texas Instruments Incorporated

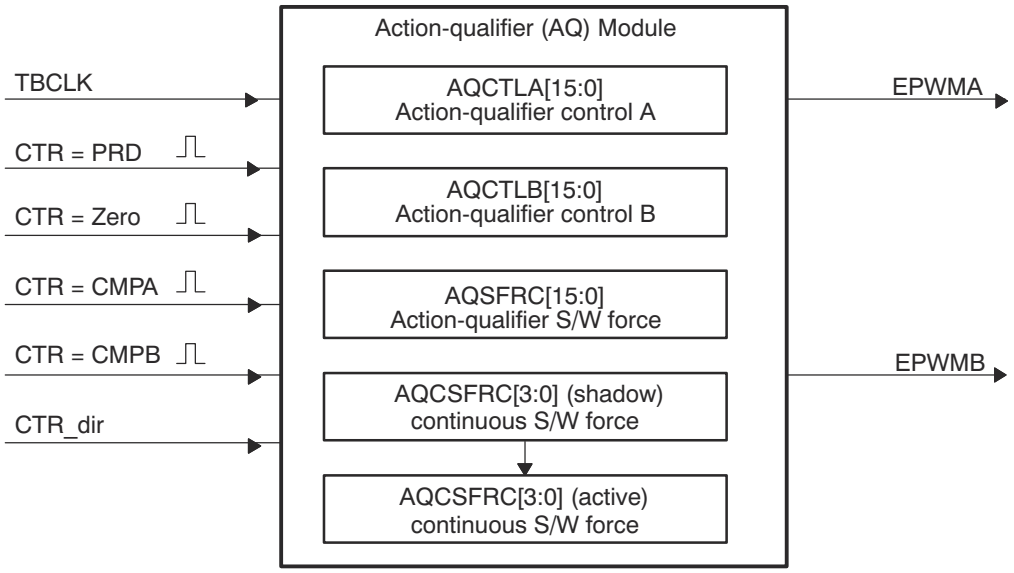

Figure 11-221. Action-Qualifier Submodule Inputs and Outputs

For convenience, the possible input events are summarized again in Table 11-1165.

Table 11-1165. Action-Qualifier Submodule Possible Input Events

Signal	Description	Registers Compared
CTR = PRD	Time-base counter equal to the period value	TBCTR = TBPRD
CTR = Zero	Time-base counter equal to zero	TBCTR = 0x0000
CTR = CMPA	Time-base counter equal to the counter-compare A	TBCTR = CMPA
CTR = CMPB	Time-base counter equal to the counter-compare B	TBCTR = CMPB
Software forced event	Asynchronous event initiated by software	

The software forced action is a useful asynchronous event. This control is handled by registers AQSFRC and AQCSFRC.

The action-qualifier submodule controls how the two outputs EPWMx0 and EPWMx1 behave when a particular event occurs. The event inputs to the action-qualifier submodule are further qualified by the counter direction (up or down). This allows for independent action on outputs on both the count-up and count-down phases.

Copyright © 2025 Texas Instruments Incorporated

The possible actions imposed on outputs EPWMxA and EPWMxB are:

- **Set High:**

  Set output EPWMx0 or EPWMx1 to a high level.
- **Clear Low:**

  Set output EPWMx0 or EPWMx1 to a low level.
- **Toggle:**

  If EPWMx0 or EPWMx1 is currently pulled high, then pull the output low. If EPWMx0 or EPWMx1 is currently pulled low, then pull the output high.
- **Do Nothing:**

  Keep outputs EPWMx0 and EPWMx1 at same level as currently set. Although the "Do Nothing" option prevents an event from causing an action on the EPWMx0 and EPWMx1 outputs, this event can still trigger interrupts and ADC start of conversion. See the Event-trigger Submodule description in Section 11.4.2.2.8 for details.

Actions are specified independently for either output (EPWMx0 or EPWMx1). Any or all events can be configured to generate actions on a given output. For example, both CTR = CMPA and CTR = CMPB can operate on output EPWMx1. All qualifier actions are configured via the control registers found at the end of this section.

For clarity, the drawings in this document use a set of symbolic actions. These symbols are summarized in Figure 11-222. Each symbol represents an action as a marker in time. Some actions are fixed in time (zero and period) while the CMPA and CMPB actions are moveable and their time positions are programmed via the counter-compare A and B registers, respectively. To turn off or disable an action, use the "Do Nothing option"; it is the default at reset.

S/W force	TB Counter equals:				Actions
	Zero	Comp A	Comp B	Period	
SW ✕	Z ✕	CA ✕	CB ✕	P ✕	Do Nothing
SW ↓	Z ↓	CA ↓	CB ↓	P ↓	Clear Low
SW ↑	Z ↑	CA ↑	CB ↑	P ↑	Set High
SW T	Z T	CA T	CB T	P T	Toggle

Figure 11-222. Possible Action-Qualifier Actions for EPWMxA and EPWMxB Outputs

Copyright © 2025 Texas Instruments Incorporated

11.4.2.2.4.3 Action-Qualifier Event Priority

It is possible for the ePWM action qualifier to receive more than one event at the same time. In this case events are assigned a priority by the hardware. The general rule is events occurring later in time have a higher priority and software forced events always have the highest priority. The event priority levels for up-down-count mode are shown in Table 11-1166. A priority level of 1 is the highest priority and level 7 is the lowest. The priority changes slightly depending on the direction of TBCTR.

Table 11-1166. Action-Qualifier Event Priority for Up-Down-Count Mode

Priority Level	Event If TBCTR is Incrementing TBCTR = Zero up to TBCTR = TBPRD	Event If TBCTR is Decrementing TBCTR = TBPRD down to TBCTR = 1
1 (Highest)	Software forced event	Software forced event
2	Counter equals CMPB on up-count (CBU)	Counter equals CMPB on down-count (CBD)
3	Counter equals CMPA on up-count (CAU)	Counter equals CMPA on down-count (CAD)
4	Counter equals zero	Counter equals period (TBPRD)
5	Counter equals CMPB on down-count (CBD)	Counter equals CMPB on up-count (CBU)
6 (Lowest)	Counter equals CMPA on down-count (CAD)	Counter equals CMPA on up-count (CBU)

Table 11-1167 shows the action-qualifier priority for up-count mode. In this case, the counter direction is always defined as up and thus down-count events will never be taken.

Table 11-1167. Action-Qualifier Event Priority for Up-Count Mode

Priority Level	Event
1 (Highest)	Software forced event
2	Counter equal to period (TBPRD)
3	Counter equal to CMPB on up-count (CBU)
4	Counter equal to CMPA on up-count (CAU)
5 (Lowest)	Counter equal to Zero

Table 11-1168 shows the action-qualifier priority for down-count mode. In this case, the counter direction is always defined as down and thus up-count events will never be taken.

Table 11-1168. Action-Qualifier Event Priority for Down-Count Mode

Priority Level	Event
1 (Highest)	Software forced event
2	Counter equal to Zero
3	Counter equal to CMPB on down-count (CBD)
4	Counter equal to CMPA on down-count (CAD)
5 (Lowest)	Counter equal to period (TBPRD)

Copyright © 2025 Texas Instruments Incorporated

It is possible to set the compare value greater than the period. In this case the action will take place as shown in Table 11-1169.

Table 11-1169. Behavior if CMPA/CMPB is Greater than the Period

Counter Mode	Compare on Up-Count Event CAD/CBD	Compare on Down-Count Event CAD/CBD
Up-Count Mode	If CMPA/CMPB ≤ TBPRD period, then the event occurs on a compare match (TBCTR=CMPA or CMPB). If CMPA/CMPB > TBPRD, then the event will not occur.	Never occurs.
Down-Count Mode	Never occurs.	If CMPA/CMPB < TBPRD, the event will occur on a compare match (TBCTR=CMPA or CMPB). If CMPA/CMPB ≥ TBPRD, the event will occur on a period match (TBCTR=TBPRD).
Up-Down-Count Mode	If CMPA/CMPB < TBPRD and the counter is incrementing, the event occurs on a compare match (TBCTR=CMPA or CMPB). If CMPA/CMPB is ≥ TBPRD, the event will occur on a period match (TBCTR = TBPRD).	If CMPA/CMPB < TBPRD and the counter is decrementing, the event occurs on a compare match (TBCTR=CMPA or CMPB). If CMPA/CMPB ≥ TBPRD, the event occurs on a period match (TBCTR=TBPRD).

11.4.2.2.4.4 Waveforms for Common Configurations

Note

The waveforms in this document show the ePWMs behavior for a static compare register value. In a running system, the active compare registers (CMPA and CMPB) are typically updated from their respective shadow registers once every period. The user specifies when the update will take place; either when the time-base counter reaches zero or when the time-base counter reaches period. There are some cases when the action based on the new value can be delayed by one period or the action based on the old value can take effect for an extra period. Some PWM configurations avoid this situation. These include, but are not limited to, the following:

Use up-down-count mode to generate a symmetric PWM:

- If you load CMPA/CMPB on zero, then use CMPA/CMPB values greater than or equal to 1.
- If you load CMPA/CMPB on period, then use CMPA/CMPB values less than or equal to TBPRD - 1.

  This means there will always be a pulse of at least one TBCLK cycle in a PWM period which, when very short, tend to be ignored by the system.

Use up-down-count mode to generate an asymmetric PWM:

- To achieve 50%-0% asymmetric PWM use the following configuration: Load CMPA/CMPB on period and use the period action to clear the PWM and a compare-up action to set the PWM. Modulate the compare value from 0 to TBPRD to achieve 50%-0% PWM duty.

When using up-count mode to generate an asymmetric PWM:

- To achieve 0-100% asymmetric PWM use the following configuration: Load CMPA/CMPB on TBPRD. Use the Zero action to set the PWM and a compare-up action to clear the PWM. Modulate the compare value from 0 to TBPRD + 1 to achieve 0-100% PWM duty.

See the *Using Enhanced Pulse Width Modulator (ePWM) Module for 0-100% Duty Cycle Control* Application Report (SPRAAI1)

Copyright © 2025 Texas Instruments Incorporated

Figure 11-223 shows how a symmetric PWM waveform can be generated using the up-down-count mode of the TBCTR. In this mode 0%-100% DC modulation is achieved by using equal compare matches on the up count and down count portions of the waveform. In the example shown, CMPA is used to make the comparison. When the counter is incrementing the CMPA match will pull the PWM output high. Likewise, when the counter is decrementing the compare match will pull the PWM signal low. When CMPA = 0, the PWM signal is low for the entire period giving the 0% duty waveform. When CMPA = TBPRD, the PWM signal is high achieving 100% duty.

When using this configuration in practice, if you load CMPA/CMPB on zero, then use CMPA/CMPB values greater than or equal to 1. If you load CMPA/CMPB on period, then use CMPA/CMPB values less than or equal to TBPRD - 1. This means there will always be a pulse of at least one TBCLK cycle in a PWM period which, when very short, tend to be ignored by the system.

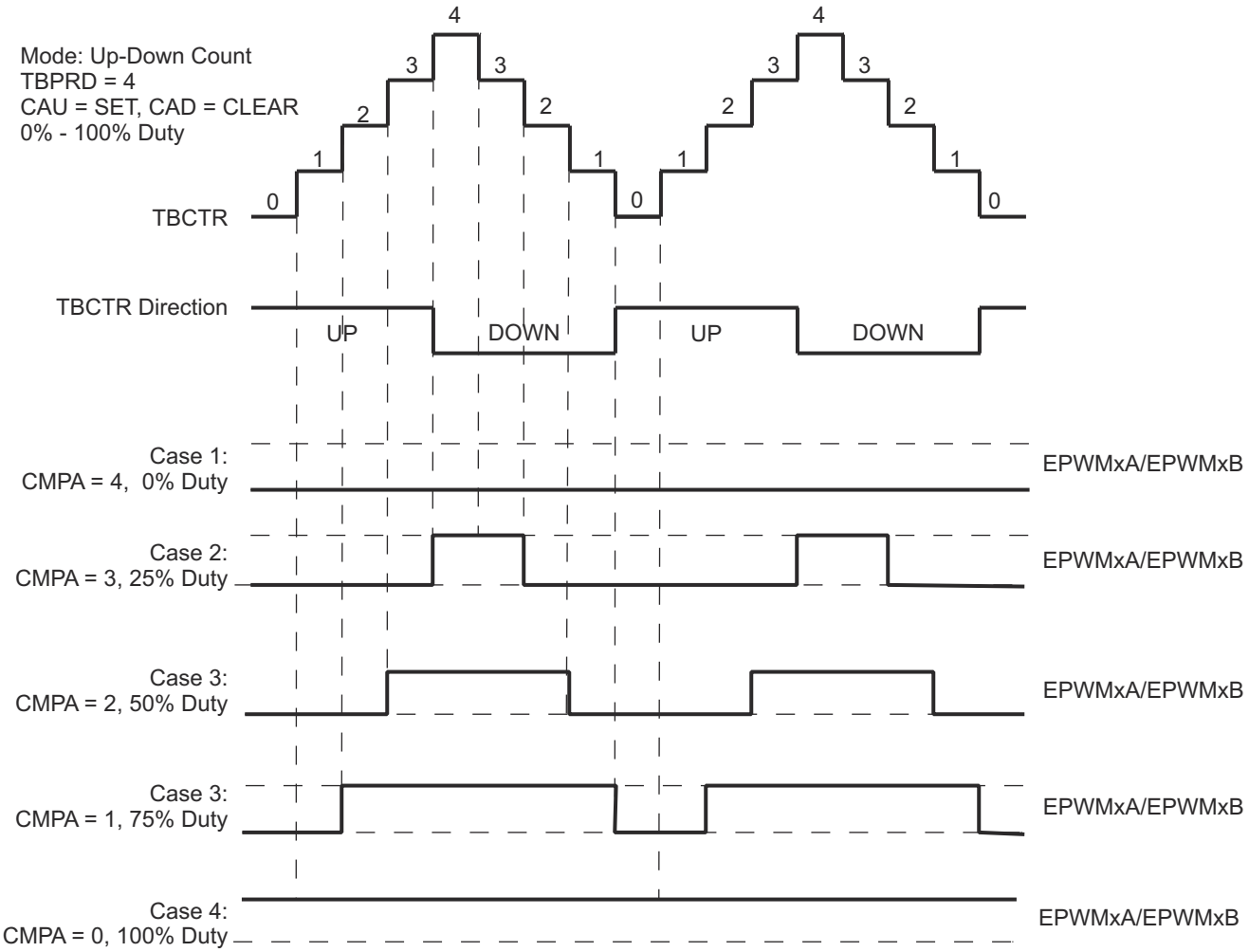

Figure 11-223. Up-Down-Count Mode Symmetrical Waveform

Copyright © 2025 Texas Instruments Incorporated

The PWM waveforms in Figure 11-224 through Figure 11-229 show some common action-qualifier configurations. The C-code samples in Example 11-2 through Example 11-7 shows how to configure an ePWM module for each case. Some conventions used in the figures and examples are as follows:

- TBPRD, CMPA, and CMPB refer to the value written in their respective registers. The active register, not the shadow register, is used by the hardware.
- CMPx, refers to either CMPA or CMPB
- EPWMxA and EPWMxB refer to the output signals from ePWMx
- Up-Down means Count-up-and-down mode, Up means up-count mode and Dwn means down-count mode
- Sym = Symmetric, Asym = Asymmetric

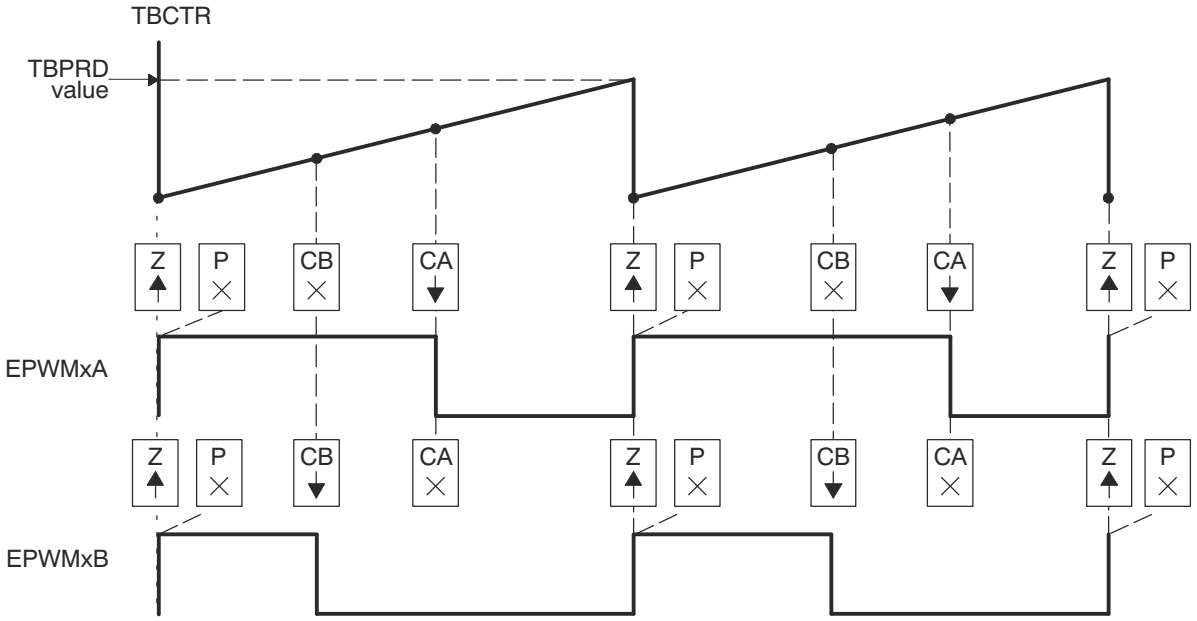

A. PWM period = (TBPRD + 1) × T_{TBCLK}
B. Duty modulation for EPWMxA is set by CMPA, and is active high (that is, high time duty proportional to CMPA).
C. Duty modulation for EPWMxB is set by CMPB and is active high (that is, high time duty proportional to CMPB).
D. The "Do Nothing" actions (X) are shown for completeness, but will not be shown on subsequent diagrams.
E. Actions at zero and period, although appearing to occur concurrently, are actually separated by one TBCLK period. TBCTR wraps from period to 0000.

Figure 11-224. Up, Single Edge Asymmetric Waveform, With Independent Modulation on EPWMxA and EPWMxB—Active High

Example 11-2 contains a code sample showing initialization and run time for the waveforms in Figure 11-224.

Copyright © 2025 Texas Instruments Incorporated

Example 11-2. Code Sample for Figure 11-224

```
// Initialization Time
// = = = = = = = = = = = = = = = = = = = = = = = = = = = =
EPwm1Regs.TBPRD = 600;                          // Period = 601 TBCLK counts
EPwm1Regs.CMPA.half.CMPA = 350;                 // Compare A = 350 TBCLK counts
EPwm1Regs.CMPB = 200;                           // Compare B = 200 TBCLK counts
EPwm1Regs.TBPHS = 0;                            // Set Phase register to zero
EPwm1Regs.TBCTR = 0;                            // clear TB counter
EPwm1Regs.TBCTL.bit.CTRMODE = TB_COUNT_UP;
EPwm1Regs.TBCTL.bit.PHSEN = TB_DISABLE;         // Phase loading disabled
EPwm1Regs.TBCTL.bit.PRDLD = TB_SHADOW;
EPwm1Regs.TBCTL.bit.SYNCOSEL = TB_SYNC_DISABLE;
EPwm1Regs.TBCTL.bit.HSPCLKDIV = TB_DIV1;        // TBCLK = SYSCLK
EPwm1Regs.TBCTL.bit.CLKDIV = TB_DIV1;
EPwm1Regs.CMPCTL.bit.SHDWAMODE = CC_SHADOW;
EPwm1Regs.CMPCTL.bit.SHDWBMODE = CC_SHADOW;
EPwm1Regs.CMPCTL.bit.LOADAMODE = CC_CTR_ZERO; // load on CTR = Zero
EPwm1Regs.CMPCTL.bit.LOADBMODE = CC_CTR_ZERO; // load on CTR = Zero
EPwm1Regs.AQCTLA.bit.ZRO = AQ_SET;
EPwm1Regs.AQCTLA.bit.CAU = AQ_CLEAR;
EPwm1Regs.AQCTLB.bit.ZRO = AQ_SET;
EPwm1Regs.AQCTLB.bit.CBU = AQ_CLEAR;
//
// Run Time
// = = = = = = = = = = = = = = = = = = = = = = = = = = = =
EPwm1Regs.CMPA.half.CMPA = Duty1A;              // adjust duty for output EPWM1A
EPwm1Regs.CMPB = Duty1B;                        // adjust duty for output EPWM1B
```

11.4.2.2.4.5

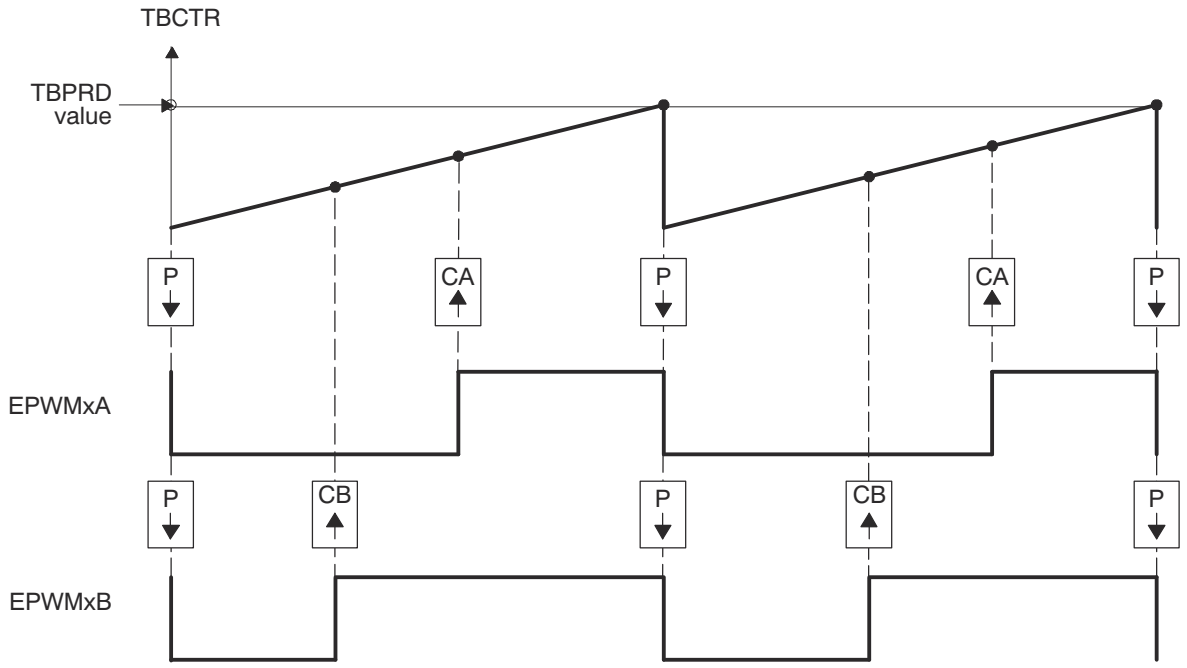

A. PWM period = (TBPRD + 1) × T_{TBCLK}
B. Duty modulation for EPWMxA is set by CMPA, and is active low (that is, the low time duty is proportional to CMPA).
C. Duty modulation for EPWMxB is set by CMPB and is active low (that is, the low time duty is proportional to CMPB).
D. Actions at zero and period, although appearing to occur concurrently, are actually separated by one TBCLK period. TBCTR wraps from period to 0000.

Figure 11-225. Up, Single Edge Asymmetric Waveform With Independent Modulation on EPWMxA and EPWMxB—Active Low

Copyright © 2025 Texas Instruments Incorporated

Example 11-3 contains a code sample showing initialization and run time for the waveforms in Figure 11-225.

Copyright © 2025 Texas Instruments Incorporated

Example 11-3. Code Sample for Figure 11-225

```
// Initialization Time
// = = = = = = = = = = = = = = = = = = = = = = = = = = =
EPwm1Regs.TBPRD = 600;                          // Period = 601 TBCLK counts
EPwm1Regs.CMPA.half.CMPA = 350;                 // Compare A = 350 TBCLK counts
EPwm1Regs.CMPB = 200;                           // Compare B = 200 TBCLK counts
EPwm1Regs.TBPHS = 0;                            // Set Phase register to zero
EPwm1Regs.TBCTR = 0;                            // clear TB counter
EPwm1Regs.TBCTL.bit.CTRMODE = TB_COUNT_UP;
EPwm1Regs.TBCTL.bit.PHSEN = TB_DISABLE;         // Phase loading disabled
EPwm1Regs.TBCTL.bit.PRDLD = TB_SHADOW;
EPwm1Regs.TBCTL.bit.SYNCOSEL = TB_SYNC_DISABLE;
EPwm1Regs.TBCTL.bit.HSPCLKDIV = TB_DIV1;        // TBCLK = VCLK4
EPwm1Regs.TBCTL.bit.CLKDIV = TB_DIV1;
EPwm1Regs.CMPCTL.bit.SHDWAMODE = CC_SHADOW;
EPwm1Regs.CMPCTL.bit.SHDWBMODE = CC_SHADOW;
EPwm1Regs.CMPCTL.bit.LOADAMODE = CC_CTR_ZERO; // load on TBCTR = Zero
EPwm1Regs.CMPCTL.bit.LOADBMODE = CC_CTR_ZERO; // load on TBCTR = Zero
EPwm1Regs.AQCTLA.bit.PRD = AQ_CLEAR;
EPwm1Regs.AQCTLA.bit.CAU = AQ_SET;
EPwm1Regs.AQCTLB.bit.PRD = AQ_CLEAR;
EPwm1Regs.AQCTLB.bit.CBU = AQ_SET;
//
// Run Time
// = = = = = = = = = = = = = = = = = = = = = = = = = = =
EPwm1Regs.CMPA.half.CMPA = Duty1A;              // adjust duty for output EPWM1A
EPwm1Regs.CMPB = Duty1B;                        // adjust duty for output EPWM1B
```

11.4.2.2.4.6

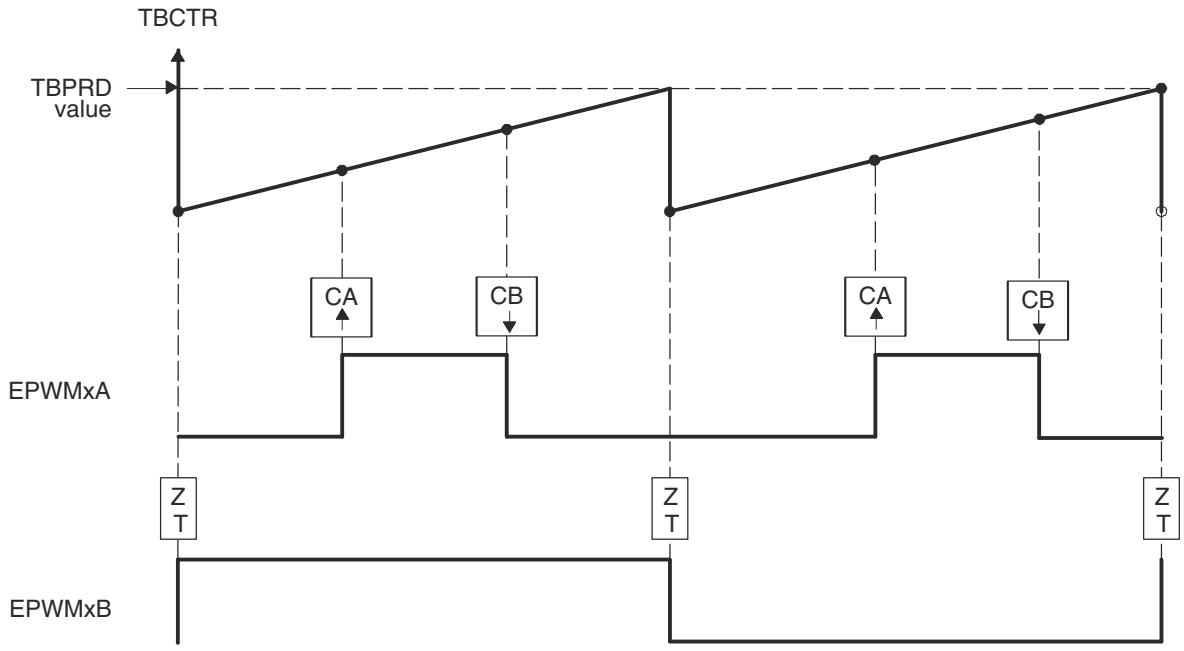

A. PWM frequency = 1/((TBPRD + 1) × T_{TBCLK})
B. Pulse can be placed anywhere within the PWM cycle (0000 - TBPRD)
C. High time duty proportional to (CMPB - CMPA)
D. EPWMxB can be used to generate a 50% duty square wave with frequency = 1/2 × ((TBPRD + 1) × TBCLK)

Figure 11-226. Up-Count, Pulse Placement Asymmetric Waveform With Independent Modulation on EPWMxA

Copyright © 2025 Texas Instruments Incorporated

Example 11-4 contains a code sample showing initialization and run time for the waveforms in Figure 11-226.

Example 11-4. Code Sample for Figure 11-226

```
// Initialization Time
// = = = = = = = = = = = = = = = = = = = = = = = = = = = =
EPwm1Regs.TBPRD = 600;                          // Period = 601 TBCLK counts
EPwm1Regs.CMPA.half.CMPA = 200;                 // Compare A = 200 TBCLK counts
EPwm1Regs.CMPB = 400;                           // Compare B = 400 TBCLK counts
EPwm1Regs.TBPHS = 0;                            // Set Phase register to zero
EPwm1Regs.TBCTR = 0;                            // clear TB counter
EPwm1Regs.TBCTL.bit.CTRMODE = TB_COUNT_UP;
EPwm1Regs.TBCTL.bit.PHSEN = TB_DISABLE;         // Phase loading disabled
EPwm1Regs.TBCTL.bit.PRDLD = TB_SHADOW;
EPwm1Regs.TBCTL.bit.SYNCOSEL = TB_SYNC_DISABLE;
EPwm1Regs.TBCTL.bit.HSPCLKDIV = TB_DIV1;        // TBCLK = VCLK4
EPwm1Regs.TBCTL.bit.CLKDIV = TB_DIV1;
EPwm1Regs.CMPCTL.bit.SHDWAMODE = CC_SHADOW;
EPwm1Regs.CMPCTL.bit.SHDWBMODE = CC_SHADOW;
EPwm1Regs.CMPCTL.bit.LOADAMODE = CC_CTR_ZERO; // load on TBCTR = Zero
EPwm1Regs.CMPCTL.bit.LOADBMODE = CC_CTR_ZERO; // load on TBCTR = Zero
EPwm1Regs.AQCTLA.bit.CAU = AQ_SET;
EPwm1Regs.AQCTLA.bit.CBU = AQ_CLEAR;
EPwm1Regs.AQCTLB.bit.ZRO = AQ_TOGGLE;
//
// Run Time
// = = = = = = = = = = = = = = = = = = = = = = = = = = = =
EPwm1Regs.CMPA.half.CMPA = EdgePosA;          // adjust duty for output EPWM1A only
EPwm1Regs.CMPB = EdgePosB;
```

11.4.2.2.4.7

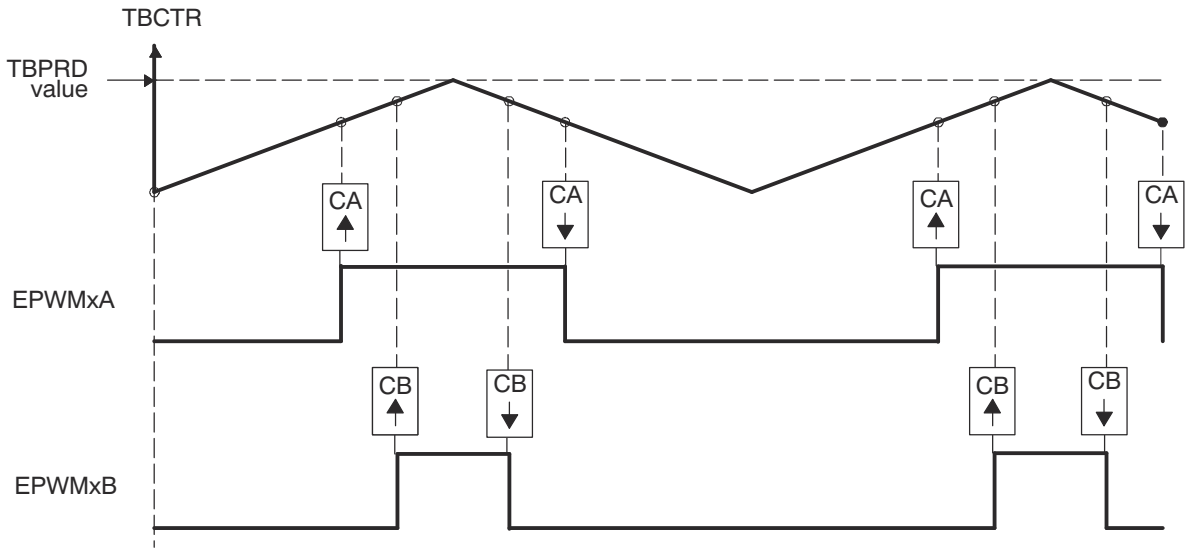

A. PWM period = 2 x TBPRD × T_{TBCLK}
B. Duty modulation for EPWMxA is set by CMPA, and is active low (that is, the low time duty is proportional to CMPA).
C. Duty modulation for EPWMxB is set by CMPB and is active low (that is, the low time duty is proportional to CMPB).
D. Outputs EPWMxA and EPWMxB can drive independent power switches

Figure 11-227. Up-Down-Count, Dual Edge Symmetric Waveform, With Independent Modulation on EPWMxA and EPWMxB — Active Low

Copyright © 2025 Texas Instruments Incorporated

Example 11-5 contains a code sample showing initialization and run time for the waveforms in Figure 11-227.

Example 11-5. Code Sample for Figure 11-227

```
// Initialization Time
// = = = = = = = = = = = = = = = = = = = = = = = =
EPwm1Regs.TBPRD = 600;                          // Period = 2*600 TBCLK counts
EPwm1Regs.CMPA.half.CMPA = 400;                 // Compare A = 400 TBCLK counts
EPwm1Regs.CMPB = 500;                           // Compare B = 500 TBCLK counts
EPwm1Regs.TBPHS = 0;                            // Set Phase register to zero
EPwm1Regs.TBCTR = 0;                            // clear TB counter
EPwm1Regs.TBCTL.bit.CTRMODE = TB_COUNT_UPDOWN; // Symmetric
xEPwm1Regs.TBCTL.bit.PHSEN = TB_DISABLE;        // Phase loading disabled
xEPwm1Regs.TBCTL.bit.PRDLD = TB_SHADOW;
EPwm1Regs.TBCTL.bit.SYNCOSEL = TB_SYNC_DISABLE;
EPwm1Regs.TBCTL.bit.HSPCLKDIV = TB_DIV1;        // TBCLK = VCLK4
EPwm1Regs.TBCTL.bit.CLKDIV = TB_DIV1;
EPwm1Regs.CMPCTL.bit.SHDWAMODE = CC_SHADOW;
EPwm1Regs.CMPCTL.bit.SHDWBMODE = CC_SHADOW;
EPwm1Regs.CMPCTL.bit.LOADAMODE = CC_CTR_ZERO;  // load on CTR = Zero
EPwm1Regs.CMPCTL.bit.LOADBMODE = CC_CTR_ZERO;  // load on CTR = Zero
EPwm1Regs.AQCTLA.bit.CAU = AQ_SET;
EPwm1Regs.AQCTLA.bit.CAD = AQ_CLEAR;
EPwm1Regs.AQCTLB.bit.CBU = AQ_SET;
EPwm1Regs.AQCTLB.bit.CBD = AQ_CLEAR;
//
// Run Time
// = = = = = = = = = = = = = = = = = = = = = = = =
EPwm1Regs.CMPA.half.CMPA = Duty1A;            // adjust duty for output EPWM1A
EPwm1Regs.CMPB = Duty1B;                      // adjust duty for output EPWM1B
```

11.4.2.2.4.8

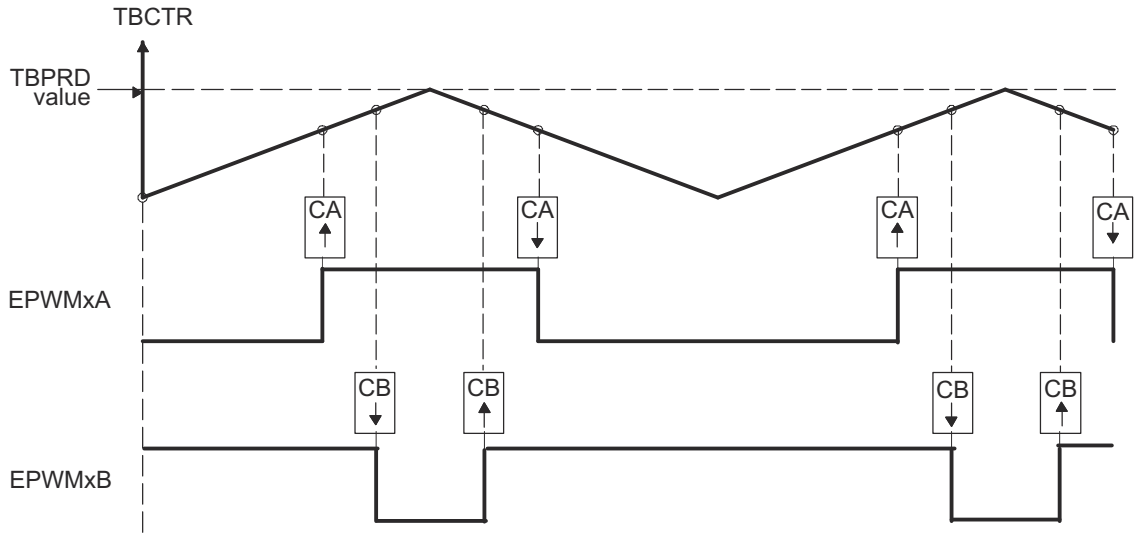

A. PWM period = 2 × TBPRD × T_{TBCLK}
B. Duty modulation for EPWMxA is set by CMPA, and is active low, that is, low time duty proportional to CMPA
C. Duty modulation for EPWMxB is set by CMPB and is active high, that is, high time duty proportional to CMPB
D. Outputs EPWMx can drive upper/lower (complementary) power switches
E. Dead-band = CMPB - CMPA (fully programmable edge placement by software). Note the dead-band module is also available if the more classical edge delay method is required.

Figure 11-228. Up-Down-Count, Dual Edge Symmetric Waveform, With Independent Modulation on EPWMxA and EPWMxB — Complementary

Copyright © 2025 Texas Instruments Incorporated

Example 11-6 contains a code sample showing initialization and run time for the waveforms in Figure 11-228.

Example 11-6. Code Sample for Figure 11-228

```
// Initialization Time
// = = = = = = = = = = = = = = = = = = = = = = = = = = = =
EPwm1Regs.TBPRD = 600;                          // Period = 2´600 TBCLK counts
EPwm1Regs.CMPA.half.CMPA = 350;                 // Compare A = 350 TBCLK counts
EPwm1Regs.CMPB = 400;                           // Compare B = 400 TBCLK counts
EPwm1Regs.TBPHS = 0;                            // Set Phase register to zero
EPwm1Regs.TBCTR = 0;                            // clear TB counter
EPwm1Regs.TBCTL.bit.CTRMODE = TB_COUNT_UPDOWN; // Symmetric
EPwm1Regs.TBCTL.bit.PHSEN = TB_DISABLE;        // Phase loading disabled
EPwm1Regs.TBCTL.bit.PRDLD = TB_SHADOW;
EPwm1Regs.TBCTL.bit.SYNCOSEL = TB_SYNC_DISABLE;
EPwm1Regs.TBCTL.bit.HSPCLKDIV = TB_DIV1;       // TBCLK = VCLK4
EPwm1Regs.TBCTL.bit.CLKDIV = TB_DIV1;
EPwm1Regs.CMPCTL.bit.SHDWAMODE = CC_SHADOW;
EPwm1Regs.CMPCTL.bit.SHDWBMODE = CC_SHADOW;
EPwm1Regs.CMPCTL.bit.LOADAMODE = CC_CTR_ZERO; // load on CTR = Zero
EPwm1Regs.CMPCTL.bit.LOADBMODE = CC_CTR_ZERO; // load on CTR = Zero
EPwm1Regs.AQCTLA.bit.CAU = AQ_SET;
EPwm1Regs.AQCTLA.bit.CAD = AQ_CLEAR;
EPwm1Regs.AQCTLB.bit.CBU = AQ_CLEAR;
EPwm1Regs.AQCTLB.bit.CBD = AQ_SET;
// Run Time
// = = = = = = = = = = = = = = = = = = = = = = = = = = = =
EPwm1Regs.CMPA.half.CMPA = Duty1A;          // adjust duty for output EPWM1A
EPwm1Regs.CMPB = Duty1B;                    // adjust duty for output EPWM1B
```

11.4.2.2.4.9

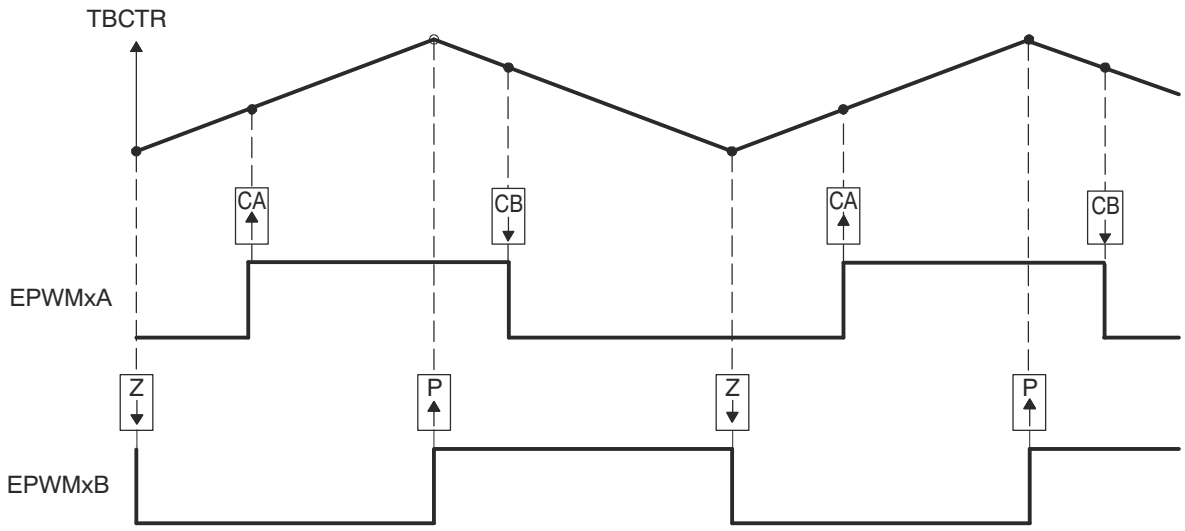

A. PWM period = 2 × TBPRD × TBCLK
B. Rising edge and falling edge can be asymmetrically positioned within a PWM cycle. This allows for pulse placement techniques.
C. Duty modulation for EPWMxA is set by CMPA and CMPB.
D. Low time duty for EPWMxA is proportional to (CMPA + CMPB).
E. To change this example to active high, CMPA and CMPB actions need to be inverted (that is, Set ! Clear and Clear Set).
F. Duty modulation for EPWMxB is fixed at 50% (utilizes spare action resources for EPWMxB)

Figure 11-229. Up-Down-Count, Dual Edge Asymmetric Waveform, With Independent Modulation on EPWMxA—Active Low

Copyright © 2025 Texas Instruments Incorporated

Example 11-7 contains a code sample showing initialization and run time for the waveforms in Figure 11-229.

Example 11-7. Code Sample for Figure 11-229

```
// Initialization Time
// = = = = = = = = = = = = = = = = = = = = = = = =
EPwm1Regs.TBPRD = 600;                          //  Period = 2 ´ 600 TBCLK counts
EPwm1Regs.CMPA.half.CMPA = 250;                 //  Compare A = 250 TBCLK counts
EPwm1Regs.CMPB = 450;                           //  Compare B = 450 TBCLK counts
EPwm1Regs.TBPHS = 0;                            //  Set Phase register to zero
EPwm1Regs.TBCTR = 0;                            //  clear TB counter
EPwm1Regs.TBCTL.bit.CTRMODE = TB_COUNT_UPDOWN; //  Symmetric
EPwm1Regs.TBCTL.bit.PHSEN = TB_DISABLE;         //  Phase loading disabled
EPwm1Regs.TBCTL.bit.PRDLD = TB_SHADOW;
EPwm1Regs.TBCTL.bit.SYNCOSEL = TB_SYNC_DISABLE;
EPwm1Regs.TBCTL.bit.HSPCLKDIV = TB_DIV1;        //  TBCLK = VCLK4
EPwm1Regs.TBCTL.bit.CLKDIV = TB_DIV1;
EPwm1Regs.CMPCTL.bit.SHDWAMODE = CC_SHADOW;
EPwm1Regs.CMPCTL.bit.SHDWBMODE = CC_SHADOW;
EPwm1Regs.CMPCTL.bit.LOADAMODE = CC_CTR_ZERO;  //  load on CTR = Zero
EPwm1Regs.CMPCTL.bit.LOADBMODE = CC_CTR_ZERO;  //  load on CTR = Zero
EPwm1Regs.AQCTLA.bit.CAU = AQ_SET;
EPwm1Regs.AQCTLA.bit.CBD = AQ_CLEAR;
EPwm1Regs.AQCTLB.bit.ZRO = AQ_CLEAR;
EPwm1Regs.AQCTLB.bit.PRD = AQ_SET;
// Run Time
// = = = = = = = = = = = = = = = = = = = = = = = =
EPwm1Regs.CMPA.half.CMPA = EdgePosA;             // adjust duty for output EPWM1A only
EPwm1Regs.CMPB = EdgePosB;
```

11.4.2.2.5 Dead-Band Generator (DB) Submodule

Figure 11-230 illustrates the dead-band submodule within the ePWM module.

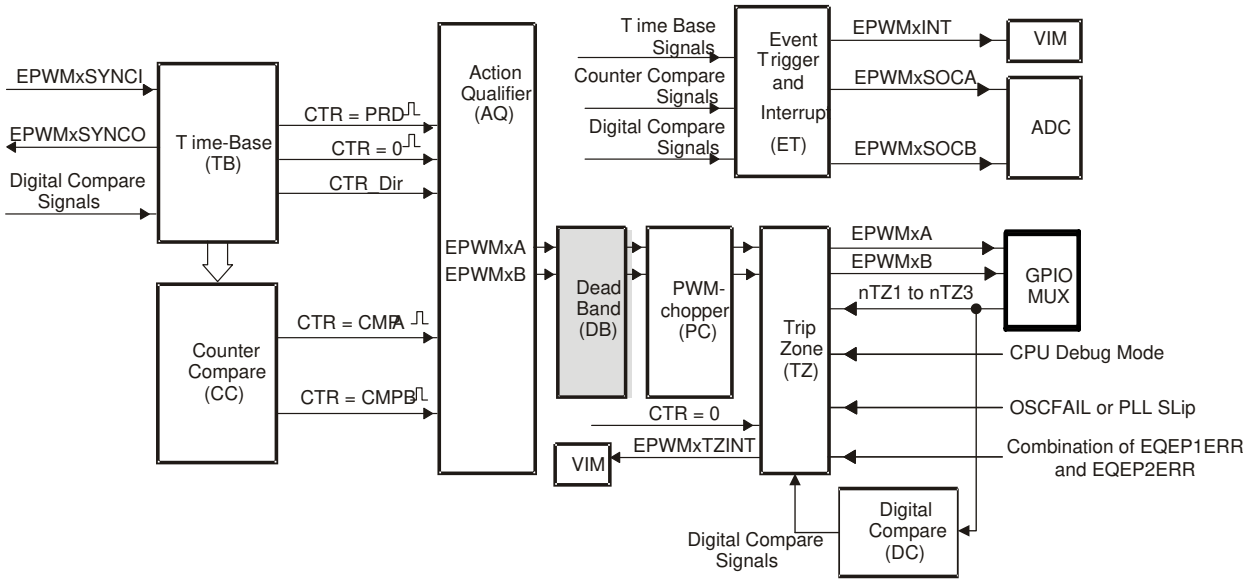

Figure 11-230. Dead_Band Submodule

11.4.2.2.5.1 Purpose of the Dead-Band Submodule

discussed how it is possible to generate the required dead-band by having full control over edge placement using both the CMPA and CMPB resources of the ePWM module. However, if the more classical edge delay-

Copyright © 2025 Texas Instruments Incorporated

based dead-band with polarity control is required, then the dead-band submodule described here should be used.

The key functions of the dead-band module are:

- Generating appropriate signal pairs (EPWMx0 and EPWMx1) with dead-band relationship from a single EPWMx0 input
- Programming signal pairs for:
  - Active high (AH)
  - Active low (AL)
  - Active high complementary (AHC)
  - Active low complementary (ALC)
- Adding programmable delay to rising edges (RED)
- Adding programmable delay to falling edges (FED)
- Can be totally bypassed from the signal path (note dotted lines in diagram)

11.4.2.2.5.2 Controlling and Monitoring the Dead-Band Submodule

The dead-band submodule operation is controlled and monitored via the following registers:

Table 11-1170. Dead-Band Generator Submodule Registers

Register Name	Address Offset	Shadowed	Description
DBCTL	0x001C	No	Dead-Band Control Register
DBRED	0x0022	No	Dead-Band Rising Edge Delay Count Register
DBFED	0x0020	No	Dead-Band Falling Edge Delay Count Register

11.4.2.2.5.3 Operational Highlights for the Dead-Band Submodule

The following sections provide the operational highlights.

The dead-band submodule has two groups of independent selection options as shown in Figure 11-231.

- **Input Source Selection:**

  The input signals to the dead-band module are the EPWMx0 and EPWMx1 output signals from the action-qualifier. In this section they will be referred to as EPWMxA In and EPWMxB In. Using the DBCTL[IN_MODE) control bits, the signal source for each delay, falling-edge or rising-edge, can be selected:
  - EPWMx0 In is the source for both falling-edge and rising-edge delay. This is the default mode.
  - EPWMx0 In is the source for falling-edge delay, EPWMxB In is the source for rising-edge delay.
  - EPWMx0 In is the source for rising edge delay, EPWMx1 In is the source for falling-edge delay.
  - EPWMx1 In is the source for both falling-edge and rising-edge delay.
- **Half Cycle Clocking:**

  The dead-band submodule can be clocked using half cycle clocking to double the resolution (that is, counter clocked at 2× TBCLK)
- **Output Mode Control:**

  The output mode is configured by way of the DBCTL[OUT_MODE] bits. These bits determine if the falling-edge delay, rising-edge delay, neither, or both are applied to the input signals.
- **Polarity Control:**

  The polarity control (DBCTL[POLSEL]) allows you to specify whether the rising-edge delayed signal and/or the falling-edge delayed signal is to be inverted before being sent out of the dead-band submodule.

Copyright © 2025 Texas Instruments Incorporated

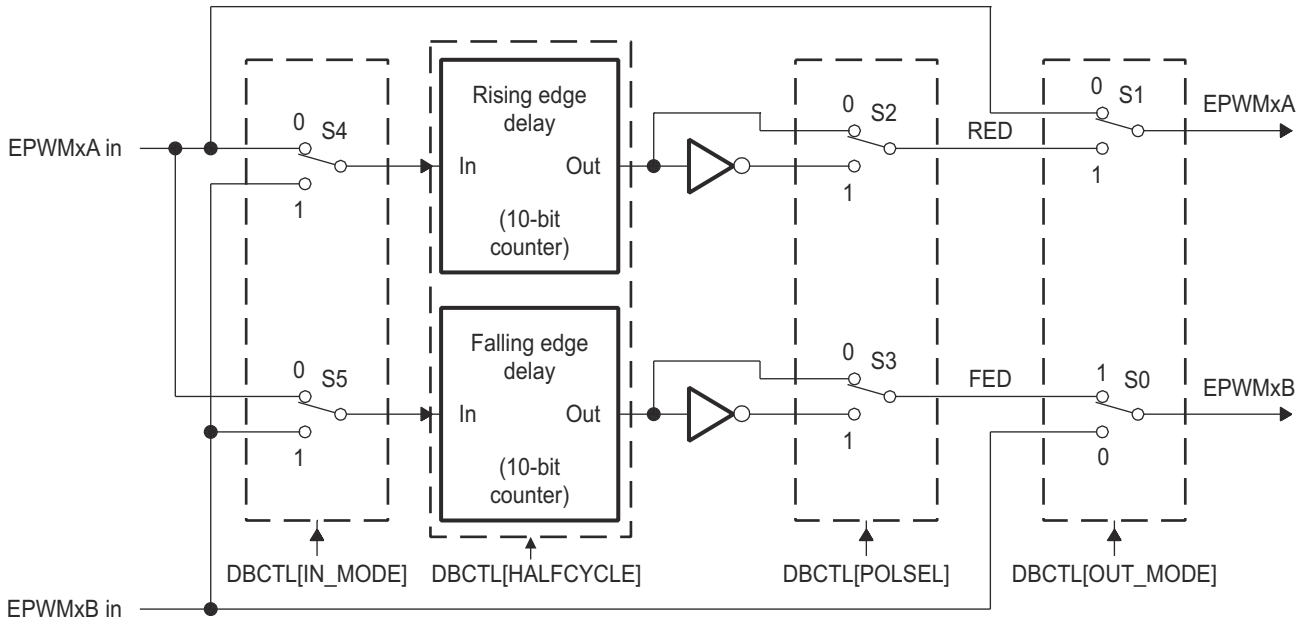

Figure 11-231. Configuration Options for the Dead-Band Submodule

Copyright © 2025 Texas Instruments Incorporated

Although all combinations are supported, not all are typical usage modes. Table 11-1171 documents some classical dead-band configurations. These modes assume that the DBCTL[IN_MODE] is configured such that EPWMx0 In is the source for both falling-edge and rising-edge delay. Enhanced, or non-traditional modes can be achieved by changing the input signal source. The modes shown in Table 11-1171 fall into the following categories:

- **Mode 1: Bypass both falling-edge delay (FED) and rising-edge delay (RED)**

  Allows you to fully disable the dead-band submodule from the PWM signal path.
- **Mode 2-5: Classical Dead-Band Polarity Settings:**

  These represent typical polarity configurations that should address all the active high/low modes required by available industry power switch gate drivers. The waveforms for these typical cases are shown in Figure 11-232. Note that to generate equivalent waveforms to Figure 11-232, configure the action-qualifier submodule to generate the signal as shown for EPWMx0.
- **Mode 6: Bypass rising-edge-delay and Mode 7: Bypass falling-edge-delay**

  Finally the last two entries in Table 11-1171 show combinations where either the falling-edge-delay (FED) or rising-edge-delay (RED) blocks are bypassed.

Table 11-1171. Classical Dead-Band Operating Modes

		DBCTL[POLSEL]		DBCTL[OUT_MODE]	
Mode	**Mode Description**	**S3**	**S2**	**S1**	**S0**
1	EPWMxA and EPWMxB Passed Through (No Delay)	X	X	0	0
2	Active High Complementary (AHC)	1	0	1	1
3	Active Low Complementary (ALC)	0	1	1	1
4	Active High (AH)	0	0	1	1
5	Active Low (AL)	1	1	1	1
6	EPWMxA Out = EPWMxA In (No Delay) EPWMxB Out = EPWMxA In with Falling Edge Delay	0 or 1	0 or 1	0	1
7	EPWMxA Out = EPWMxA In with Rising Edge Delay EPWMxB Out = EPWMxB In with No Delay	0 or 1	0 or 1	1	0

Figure 11-232 shows waveforms for typical cases where 0% < duty < 100%.

Copyright © 2025 Texas Instruments Incorporated

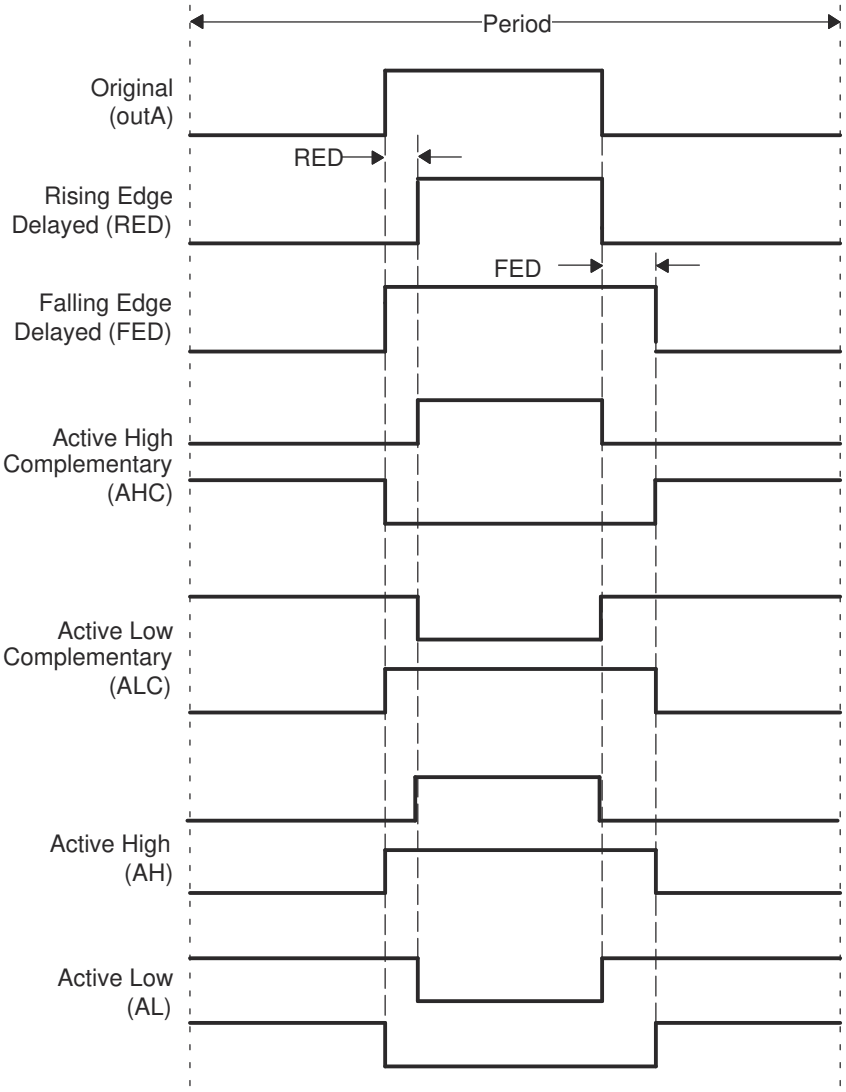

Figure 11-232. Dead-Band Waveforms for Typical Cases (0% < Duty < 100%)

Copyright © 2025 Texas Instruments Incorporated

The dead-band submodule supports independent values for rising-edge (RED) and falling-edge (FED) delays. The amount of delay is programmed using the DBRED and DBFED registers. These are 10-bit registers and their value represents the number of time-base clock, TBCLK, periods a signal edge is delayed by. For example, the formula to calculate falling-edge-delay and rising-edge-delay are:

$FED = DBFED \times T_{TBCLK}$

$RED = DBRED \times T_{TBCLK}$

Where T_{TBCLK} is the period of TBCLK, the prescaled version of VCLK4.

For convenience, delay values for various TBCLK options are shown in Table 11-1172.

Table 11-1172. Dead-Band Delay Values in µS as a Function of DBFED and DBRED

Dead-Band Value	Dead-Band Delay in µS		
DBFED, DBRED	TBCLK = VCLK4/1	TBCLK = VCLK4 /2	TBCLK = VCLK4/4
1	0.02 µS	0.03 µS	0.07 µS
5	0.08 µS	0.17 µS	0.33 µS
10	0.17 µS	0.33 µS	0.67 µS
100	1.67 µS	3.33 µS	6.67 µS
200	3.33 µS	6.67 µS	13.33 µS
400	6.67 µS	13.33 µS	26.67 µS
500	8.33 µS	16.67 µS	33.33 µS
600	10.00 µS	20.00 µS	40.00 µS
700	11.67 µS	23.33 µS	46.67 µS
800	13.33 µS	26.67 µS	53.33 µS
900	15.00 µS	30.00 µS	60.00 µS
1000	16.67 µS	33.33µS	66.67 µS

When half-cycle clocking is enabled, the formula to calculate the falling-edge-delay and rising-edge-delay becomes:

$FED = DBFED \times T_{TBCLK}/2$

$RED = DBRED \times T_{TBCLK}/2$

Copyright © 2025 Texas Instruments Incorporated

11.4.2.2.6 PWM-Chopper (PC) Submodule

Figure 11-233 illustrates the PWM-chopper (PC) submodule within the ePWM module.

The PWM-chopper submodule allows a high-frequency carrier signal to modulate the PWM waveform generated by the action-qualifier and dead-band submodules. This capability is important if you need pulse transformer-based gate drivers to control the power switching elements.

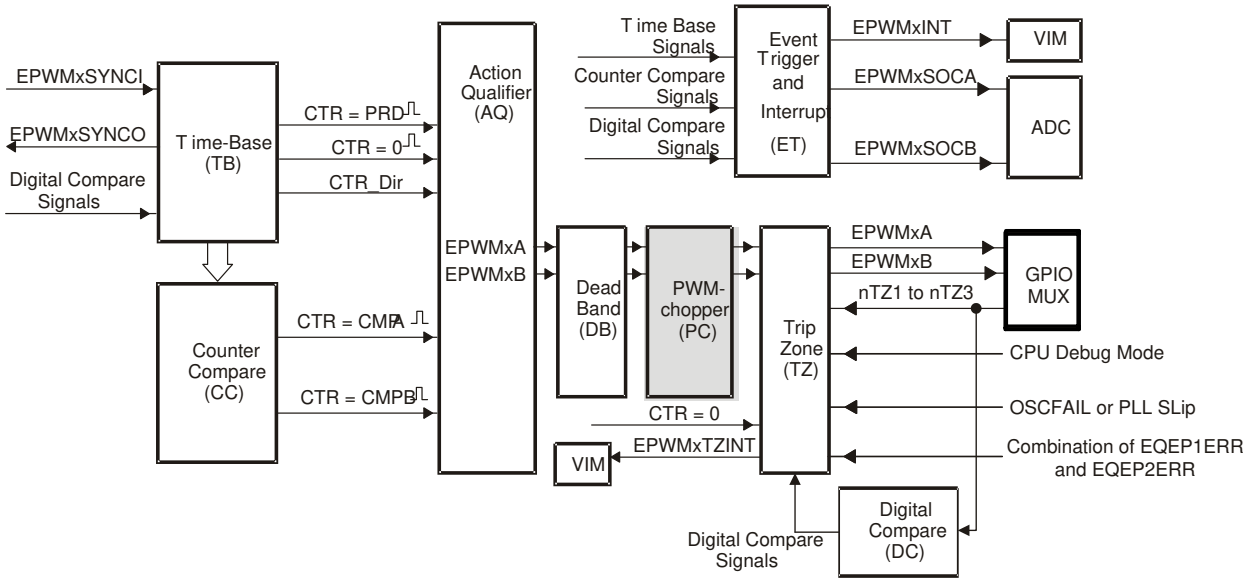

Figure 11-233. PWM-Chopper Submodule

11.4.2.2.6.1 Purpose of the PWM-Chopper Submodule

The key functions of the PWM-chopper submodule are:

- Programmable chopping (carrier) frequency
- Programmable pulse width of first pulse
- Programmable duty cycle of second and subsequent pulses
- Can be fully bypassed if not required

11.4.2.2.6.2 Controlling the PWM-Chopper Submodule

The PWM-chopper submodule operation is controlled via the registers in Table 11-1173.

Table 11-1173. PWM-Chopper Submodule Registers

Register Name	Address Offset	Shadowed	Description
PCCTL	0x003E	No	PWM-chopper Control Register

11.4.2.2.6.3 Operational Highlights for the PWM-Chopper Submodule

Figure 11-234 shows the operational details of the PWM-chopper submodule. The carrier clock is derived from VCLK4. Its frequency and duty cycle are controlled via the CHPFREQ and CHPDUTY bits in the PCCTL register. The one-shot block is a feature that provides a high energy first pulse to ensure hard and fast power switch turn on, while the subsequent pulses sustain pulses, ensuring the power switch remains on. The one-shot width is programmed via the OSHTWTH bits. The PWM-chopper submodule can be fully disabled (bypassed) via the CHPEN bit.

Copyright © 2025 Texas Instruments Incorporated

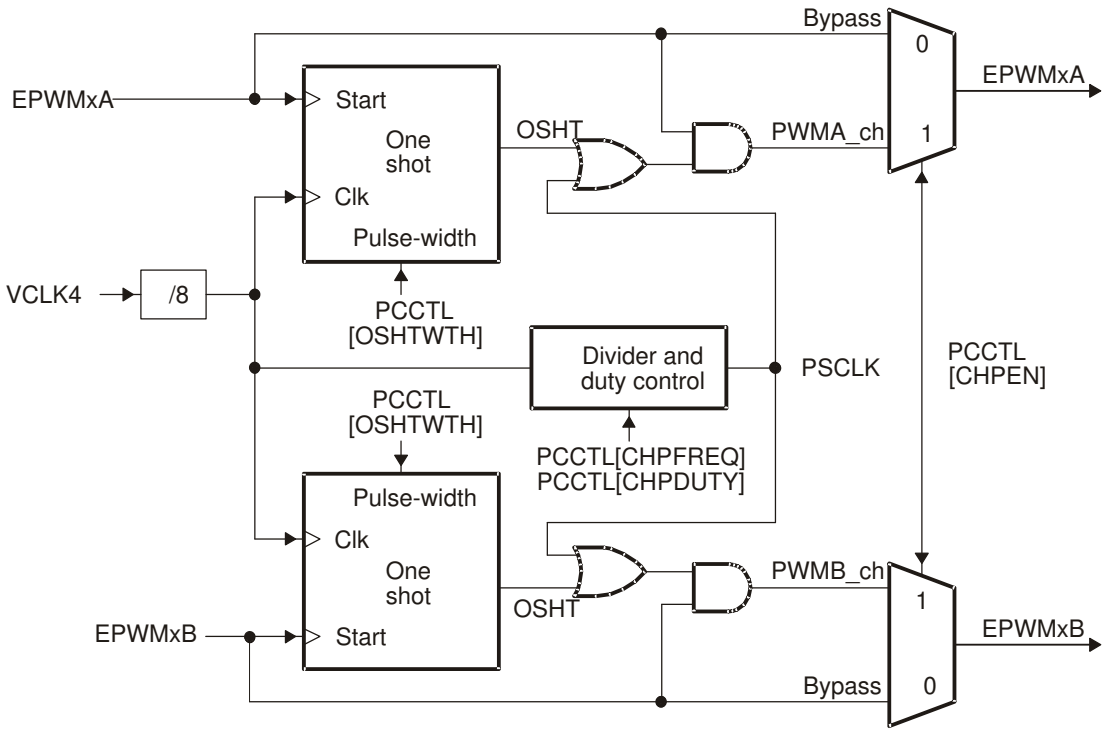

Figure 11-234. PWM-Chopper Submodule Operational Details

11.4.2.2.6.4 Waveforms

Figure 11-235 shows simplified waveforms of the chopping action only; one-shot and duty-cycle control are not shown. Details of the one-shot and duty-cycle control are discussed in the following sections.

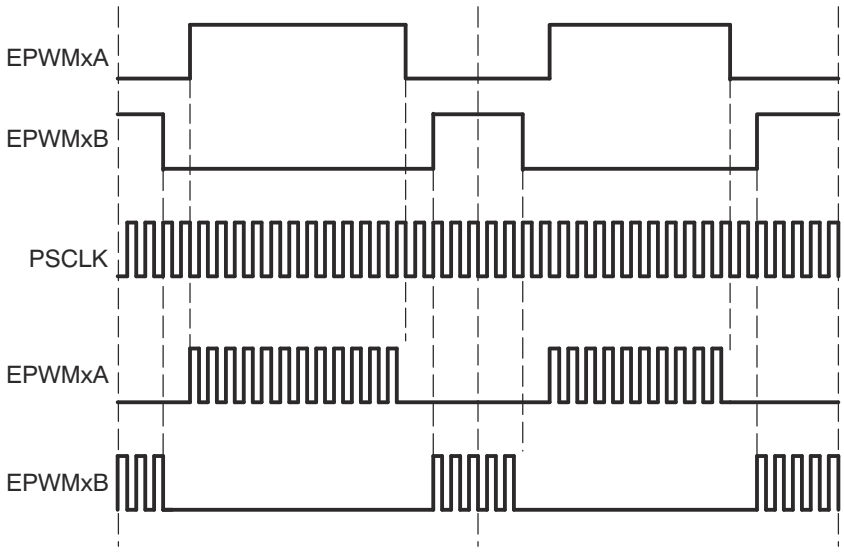

Figure 11-235. Simple PWM-Chopper Submodule Waveforms Showing Chopping Action Only

Copyright © 2025 Texas Instruments Incorporated

11.4.2.2.6.4.1 One-Shot Pulse

The width of the first pulse can be programmed to any of 16 possible pulse width values. The width or period of the first pulse is given by:

$T_{1stpulse} = T_{VCLK4} \times 8 \times OSHTWTH$

Where T_{VCLK4} is the period of the system clock (VCLK4) and OSHTWTH is the four control bits (value from 1 to 16)

Figure 11-236 shows the first and subsequent sustaining pulses and Table 11-1174 gives the possible pulse width values for a VCLK4 = 100 MHz.

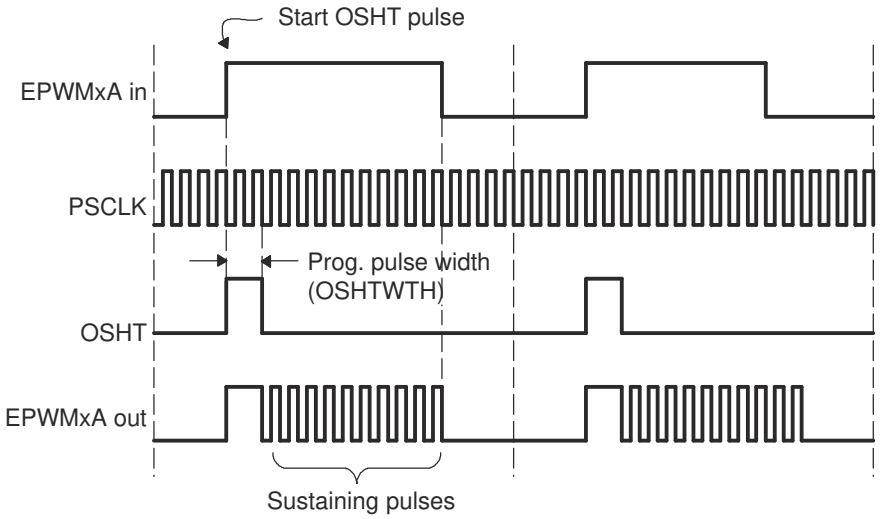

Figure 11-236. PWM-Chopper Submodule Waveforms Showing the First Pulse and Subsequent Sustaining Pulses

Table 11-1174. Possible Pulse Width Values for VCLK4 = 100 MHz

OSHTWTHz (hex)	Pulse Width (nS)
0	100
1	200
2	300
3	400
4	500
5	600
6	700
7	800
8	900
9	1000
A	1100
B	1200
C	1300
D	1400
E	1500

Copyright © 2025 Texas Instruments Incorporated

Table 11-1174. Possible Pulse Width Values for VCLK4 = 100 MHz (continued)

OSHTWTHz (hex)	Pulse Width (nS)
F	1600

11.4.2.2.6.4.2 Duty Cycle Control

Pulse transformer-based gate drive designs need to comprehend the magnetic properties or characteristics of the transformer and associated circuitry. Saturation is one such consideration. To assist the gate drive designer, the duty cycles of the second and subsequent pulses have been made programmable. These sustaining pulses ensure the correct drive strength and polarity is maintained on the power switch gate during the on period, and hence a programmable duty cycle allows a design to be tuned or optimized via software control.

Figure 11-237 shows the duty cycle control that is possible by programming the CHPDUTY bits. One of seven possible duty ratios can be selected ranging from 12.5% to 87.5%.

Copyright © 2025 Texas Instruments Incorporated

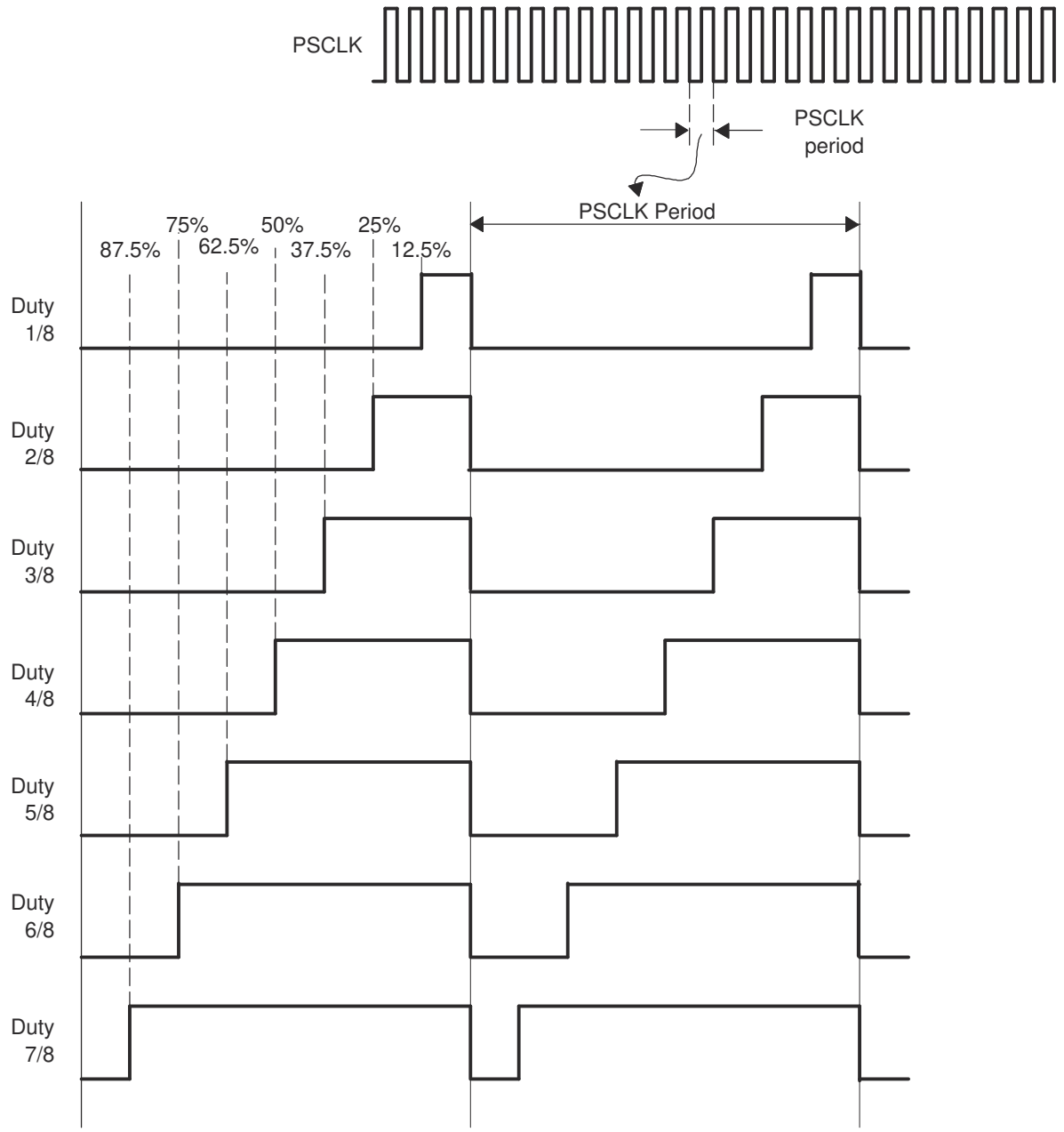

Figure 11-237. PWM-Chopper Submodule Waveforms Showing the Pulse Width (Duty Cycle) Control of Sustaining Pulses

11.4.2.2.7 Trip-Zone (TZ) Submodule

Figure 11-238 shows how the trip-zone (TZ) submodule fits within the ePWM module.

Each ePWM module is connected to six $\overline{TZn}$ signals ($\overline{TZ1}$ to $\overline{TZ6}$). $\overline{TZ1}$ to $\overline{TZ3}$ are sourced from the GPIO mux. $\overline{TZ4}$ is sourced from a combination of EQEP1ERR and EQEP2ERR signals. $\overline{TZ5}$ is connected to the system oscillator or PLL clock fail logic, and $\overline{TZ6}$ is sourced from the debug mode halt indication output from the CPU. These signals indicate fault or trip conditions, and the ePWM outputs can be programmed to respond accordingly when faults occur.

Copyright © 2025 Texas Instruments Incorporated

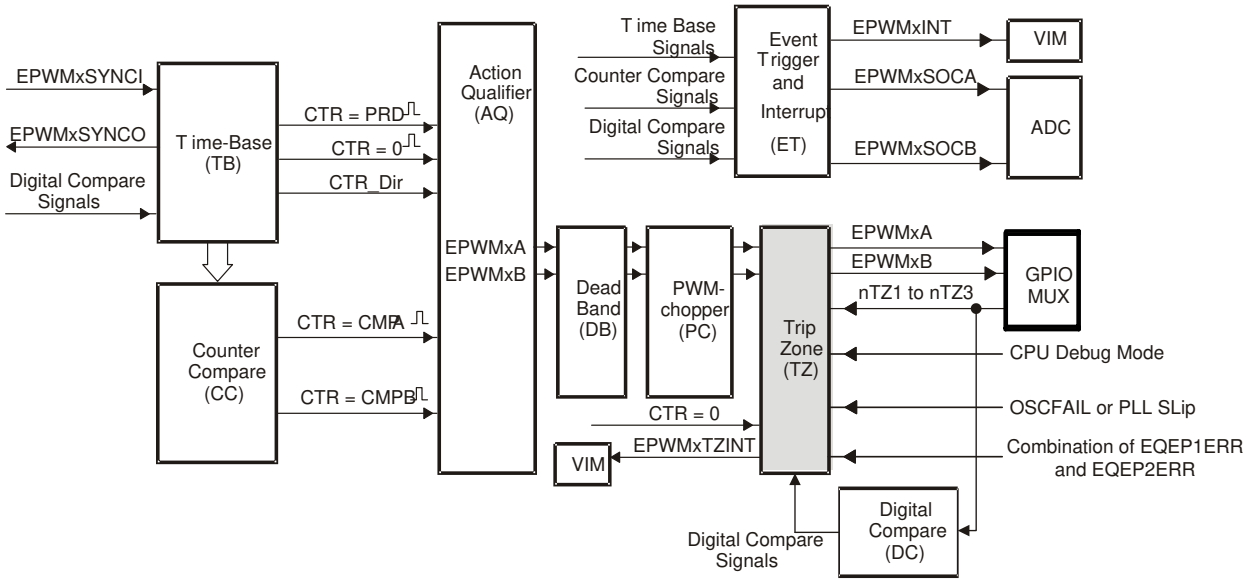

Figure 11-238. Trip-Zone Submodule

11.4.2.2.7.1 Purpose of the Trip-Zone Submodule

The key functions of the Trip-Zone submodule are:

- Trip inputs $\overline{TZ1}$ to $\overline{TZ6}$ are mapped to all ePWM modules.
- Upon a fault indication, either no action is taken or the ePWM outputs EPWMx0 and EPWMx1 can be forced to one of the following:
  - High
  - Low
  - High-impedance
- Support for one-shot trip (OSHT) for major short circuits or over-current conditions.
- Support for cycle-by-cycle tripping (CBC) for current limiting operation.
- Support for digital compare tripping (DC) based on state of on-chip analog comparator module outputs and/or $\overline{TZ1}$ to $\overline{TZ3}$ signals.
- Each trip-zone input and digital compare (DC) submodule DCAEVT1/2 or DCBEVT1/2 force event can be allocated to either one-shot or cycle-by-cycle operation.
- Interrupt generation is possible on any trip-zone input.
- Software-forced tripping is also supported.
- The trip-zone submodule can be fully bypassed if it is not required.

Copyright © 2025 Texas Instruments Incorporated

11.4.2.2.7.2 Controlling and Monitoring the Trip-Zone Submodule

The trip-zone submodule operation is controlled and monitored through the following registers:

Table 11-1175. Trip-Zone Submodule Registers

Register Name	Address Offset	Shadowed	Description [2]
TZSEL	0x0026	No	Trip-Zone Select Register
TZDCSEL	0x0024	No	Trip-zone Digital Compare Select Register [1]
TZCTL	0x002A	No	Trip-Zone Control Register
TZEINT	0x0028	No	Trip-Zone Enable Interrupt Register
TZFLG	0x002E	No	Trip-Zone Flag Register
TZCLR	0x002C	No	Trip-Zone Clear Register
TZFRC	0x0032	No	Trip-Zone Force Register

(1) This register is discussed in more detail in Section 11.4.2.2.9.
(2) All trip-zone registers are writable only in privileged mode.

11.4.2.2.7.3 Operational Highlights for the Trip-Zone Submodule

The following sections describe the operational highlights and configuration options for the trip-zone submodule.

The trip-zone signals $\overline{TZ1}$ to $\overline{TZ6}$ (also collectively referred to as $\overline{TZn}$) are active low input signals. When one of these signals goes low, or when a DCAEVT1/2 or DCBEVT1/2 force happens based on the TZDCSEL register event selection, it indicates that a trip event has occurred. Each ePWM module can be individually configured to ignore or use each of the trip-zone signals or DC events. Which trip-zone signals or DC events are used by a particular ePWM module is determined by the TZSEL register for that specific ePWM module. The trip-zone signals may or may not be synchronized to the system clock (VCLK4) and digitally filtered within the GPIO MUX block. A minimum of 3*TBCLK low pulse width on $\overline{TZn}$ inputs is sufficient to trigger a fault condition on the ePWM module. If the pulse width is less than this, the trip condition may not be latched. The asynchronous trip makes sure that if clocks are missing for any reason, the outputs can still be tripped by a valid event present on $\overline{TZn}$ inputs. The GPIOs or peripherals must be appropriately configured. For more information, see the IOMM chapter of the device technical reference manual.

Each $\overline{TZn}$ input can be individually configured to provide either a cycle-by-cycle or one-shot trip event for an ePWM module. DCAEVT1 and DCBEVT1 events can be configured to directly trip an ePWM module or provide a one-shot trip event to the module. Likewise, DCAVET2 and DCBEVT2 events can also be configured to directly trip an ePWM module or provide a cycle-by-cycle trip event to the module. This configuration is determined by the TZSEL[DCAEVT1/2], TZSEL[DCBEVT1/2], TZSEL[CBCn], and TZSEL[OSHTn] control bits (where n corresponds to the trip input) respectively.

- **Cycle-by-Cycle (CBC):**

  When a cycle-by-cycle trip event occurs, the action specified in the TZCTL[TZA] and TZCTL[TZB] bits is carried out immediately on the EPWMxA and/or EPWMxB output. Table 11-1176 lists the possible actions. In addition, the cycle-by-cycle trip event flag (TZFLG[CBC]) is set and a EPWMx_TZINT interrupt is generated if it is enabled in the TZEINT register and VIM peripheral.

  If the CBC interrupt is enabled via the TZEINT register, and DCAEVT2 or DCBEVT2 are selected as CBC trip sources via the TZSEL register, it is not necessary to also enable the DCAEVT2 or DCBEVT2 interrupts in the TZEINT register, as the DC events trigger interrupts through the CBC mechanism.

  The specified condition on the inputs is automatically cleared when the ePWM time-base counter reaches zero (TBCTR = 0x0000) if the trip event is no longer present. Therefore, in this mode, the trip event is cleared or reset every PWM cycle. The TZFLG[CBC] flag bit will remain set until it is manually cleared by writing to the TZCLR[CBC] bit. If the cycle-by-cycle trip event is still present when the TZFLG[CBC] bit is cleared, then it will again be immediately set.

Copyright © 2025 Texas Instruments Incorporated

- **One-Shot (OSHT):**

  When a one-shot trip event occurs, the action specified in the TZCTL[TZA] and TZCTL[TZB] bits is carried out immediately on the EPWMxA and/or EPWMxB output. Table 11-1176 lists the possible actions. In addition, the one-shot trip event flag (TZFLG[OST]) is set and a EPWMx_TZINT interrupt is generated if it is enabled in the TZEINT register and VIM peripheral. The one-shot trip condition must be cleared manually by writing to the TZCLR[OST] bit.

  If the one-shot interrupt is enabled via the TZEINT register, and DCAEVT1 or DCBEVT1 are selected as OSHT trip sources via the TZSEL register, it is not necessary to also enable the DCAEVT1 or DCBEVT1 interrupts in the TZEINT register, as the DC events trigger interrupts through the OSHT mechanism.
- **Digital Compare Events (DCAEVT1/2 and DCBEVT1/2):**

  A digital compare DCAEVT1/2 or DCBEVT1/2 event is generated based on a combination of the DCAH/DCAL and DCBH/DCBL signals as selected by the TZDCSEL register. The signals which source the DCAH/DCAL and DCBH/DCBL signals are selected via the DCTRIPSEL register and can be either trip zone input pins. For more information on the digital compare submodule signals, see Section 11.4.2.2.9.

  When a digital compare event occurs, the action specified in the TZCTL[DCAEVT1/2] and TZCTL[DCBEVT1/2] bits is carried out immediately on the EPWMxA and/or EPWMxB output. Table 11-1176 lists the possible actions. In addition, the relevant DC trip event flag (TZFLG[DCAEVT1/2] / TZFLG[DCBEVT1/2]) is set and a EPWMx_TZINT interrupt is generated if it is enabled in the TZEINT register and VIM peripheral.

  The specified condition on the pins is automatically cleared when the DC trip event is no longer present. The TZFLG[DCAEVT1/2] or TZFLG[DCBEVT1/2] flag bit will remain set until it is manually cleared by writing to the TZCLR[DCAEVT1/2] or TZCLR[DCBEVT1/2] bit. If the DC trip event is still present when the TZFLG[DCAEVT1/2] or TZFLG[DCBEVT1/2] flag is cleared, then it will again be immediately set.

The action taken when a trip event occurs can be configured individually for each of the ePWM output pins by way of the TZCTL register bit fields. One of four possible actions, shown in Table 11-1176, can be taken on a trip event.

Table 11-1176. Possible Actions On a Trip Event

TZCTL Register bit-field Settings	EPWMxA and/or EPWMxB	Comment
0,0	High-Impedance	Tripped
0,1	Force to High State	Tripped
1,0	Force to Low State	Tripped
1,1	No Change	Do Nothing. No change is made to the output.

Copyright © 2025 Texas Instruments Incorporated

Example 11-8. Trip-Zone Configurations

Scenario A:
A one-shot trip event on $\overline{TZ1}$ pulls both EPWMA0, EPWMA1 low and also forces EPWMB0 and EPWMB1 high.

- Configure the ePWMA registers as follows:
  - TZSEL[OSHT1] = 1: enables $\overline{TZ1}$ as a one-shot event source for ePWMA
  - TZCTL[TZA] = 2: EPWMA0 will be forced low on a trip event.
  - TZCTL[TZB] = 2: EPWMA1 will be forced low on a trip event.
- Configure the ePWMB registers as follows:
  - TZSEL[OSHT1] = 1: enables $\overline{TZ1}$ as a one-shot event source for ePWMB
  - TZCTL[TZA] = 1: EPWMB0 will be forced high on a trip event.
  - TZCTL[TZB] = 1: EPWMB1 will be forced high on a trip event.

Scenario B:
A cycle-by-cycle event on $\overline{TZ5}$ pulls both EPWMA0, EPWMA1 low.
A one-shot event on $\overline{TZ1}$ or $\overline{TZ6}$ puts EPWMB0 into a high impedance state.

- Configure the ePWM1 registers as follows:
  - TZSEL[CBC5] = 1: enables $\overline{TZ5}$ as a one-shot event source for ePWMA
  - TZCTL[TZA] = 2: EPWMA0 will be forced low on a trip event.
  - TZCTL[TZB] = 2: EPWMA1 will be forced low on a trip event.
- Configure the ePWM2 registers as follows:
  - TZSEL[OSHT1] = 1: enables $\overline{TZ1}$ as a one-shot event source for ePWMB
  - TZSEL[OSHT6] = 1: enables $\overline{TZ6}$ as a one-shot event source for ePWMB
  - TZCTL[TZA] = 0: EPWMB0 will be put into a high-impedance state on a trip event.
  - TZCTL[TZB] = 3: EPWMB1 will ignore the trip event.

Copyright © 2025 Texas Instruments Incorporated

11.4.2.2.7.4 Generating Trip Event Interrupts

Figure 11-239 and Figure 11-240 illustrate the trip-zone submodule control and interrupt logic, respectively. DCAEVT1/2 and DCBEVT1/2 signals are described in further detail in Section 11.4.2.2.9.

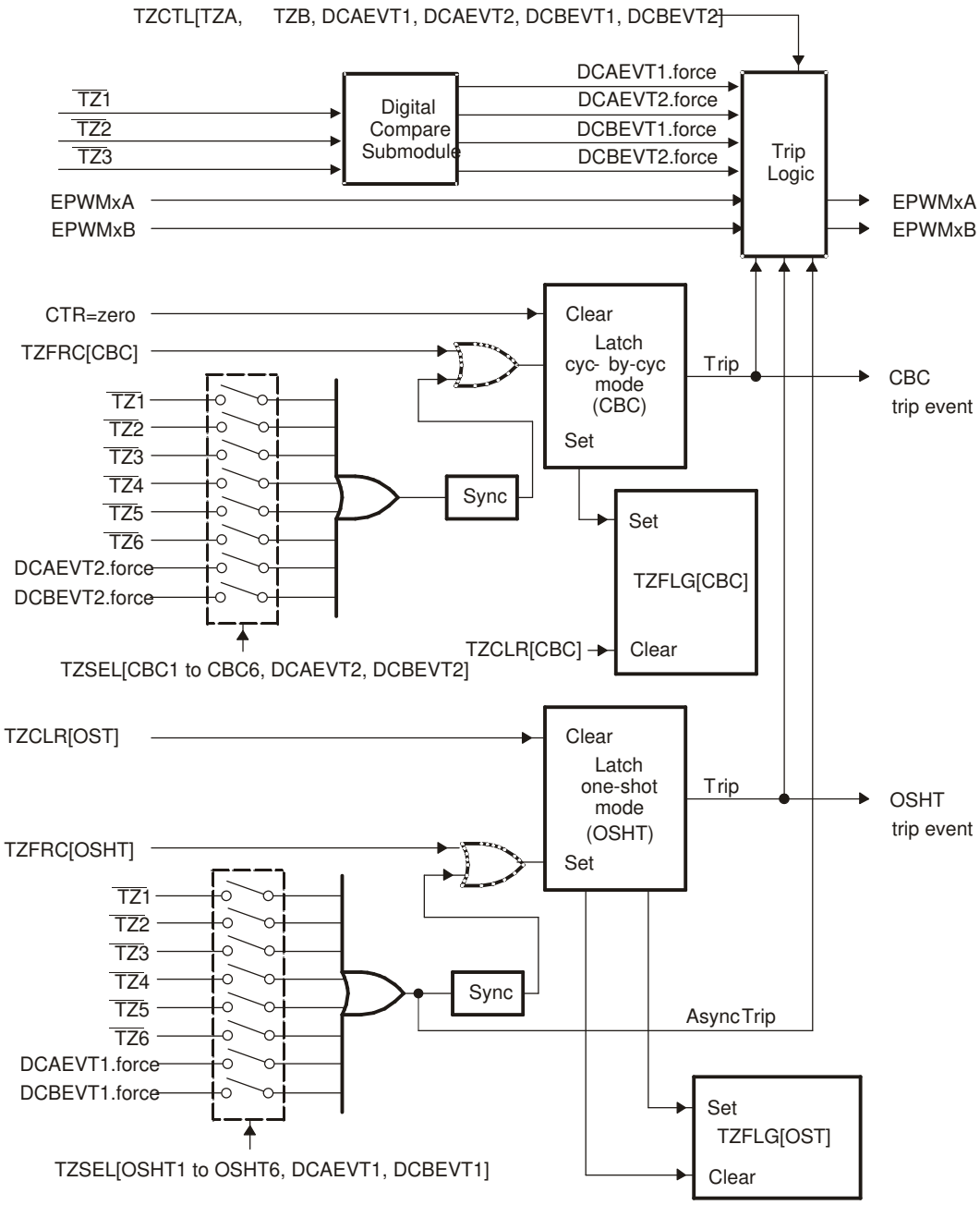

Figure 11-239. Trip-Zone Submodule Mode Control Logic

Copyright © 2025 Texas Instruments Incorporated

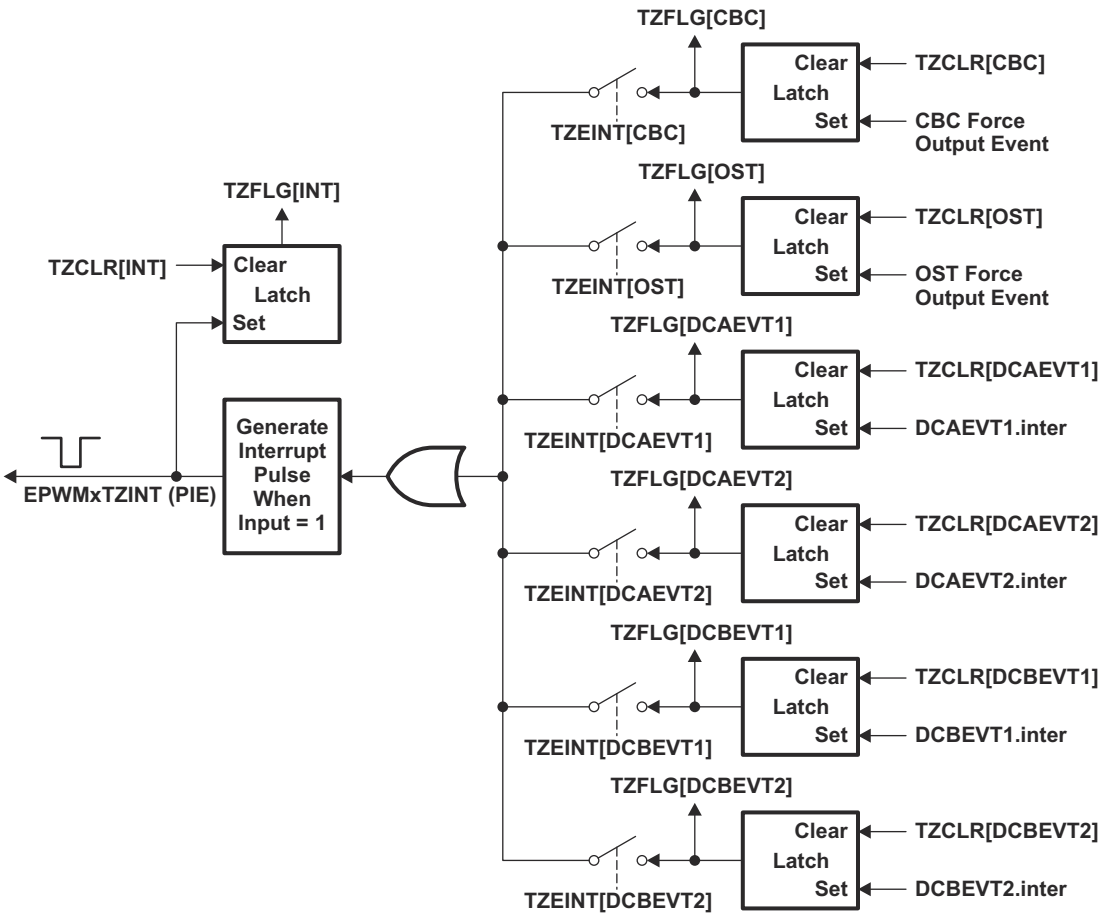

Figure 11-240. Trip-Zone Submodule Interrupt Logic

Copyright © 2025 Texas Instruments Incorporated

11.4.2.2.8 Event-Trigger (ET) Submodule

The key functions of the event-trigger submodule are:

- Receives event inputs generated by the time-base, counter-compare and digital-compare submodules
- Uses the time-base direction information for up/down event qualification
- Uses prescaling logic to issue interrupt requests and ADC start of conversion at:
  - Every event
  - Every second event
  - Every third event
- Provides full visibility of event generation via event counters and flags
- Allows software forcing of Interrupts and ADC start of conversion

The event-trigger submodule manages the events generated by the time-base submodule, the counter-compare submodule, and the digital-compare submodule to generate an interrupt to the CPU and/or a start of conversion pulse to the ADC when a selected event occurs. Figure 11-241 illustrates where the event-trigger submodule fits within the ePWM system.

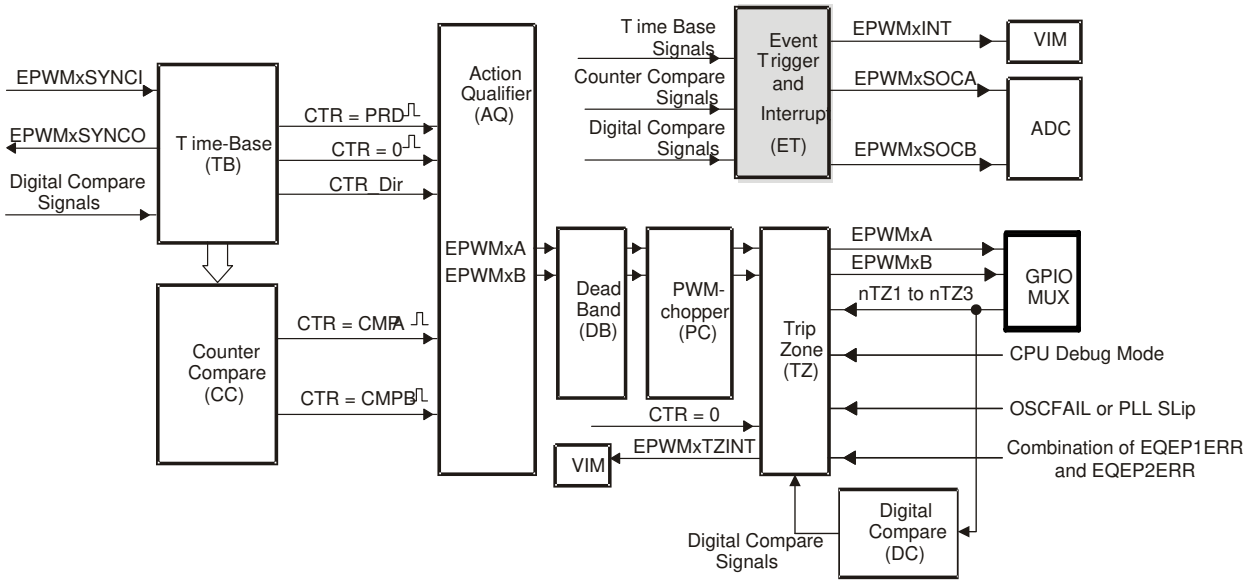

Figure 11-241. Event-Trigger Submodule

11.4.2.2.8.1 Operational Overview of the Event-Trigger Submodule

The following sections describe the event-trigger submodule's operational highlights.

Each ePWM module has one interrupt request line connected to the VIM and two start of conversion signals connected to the ADC module. As shown in Figure 11-242, the ePWMxSOCA and ePWMxSOCB signals are combined to generate four special signals that can be used to trigger an ADC start of conversion, and hence multiple modules can initiate an ADC start of conversion via the ADC trigger inputs.

The event-trigger submodule monitors various event conditions (the left side inputs to event-trigger submodule shown in Figure 11-243) and can be configured to prescale these events before issuing an Interrupt request or an ADC start of conversion. The event-trigger prescaling logic can issue Interrupt requests and ADC start of conversion at:

- Every event
- Every second event
- Every third event

Copyright © 2025 Texas Instruments Incorporated

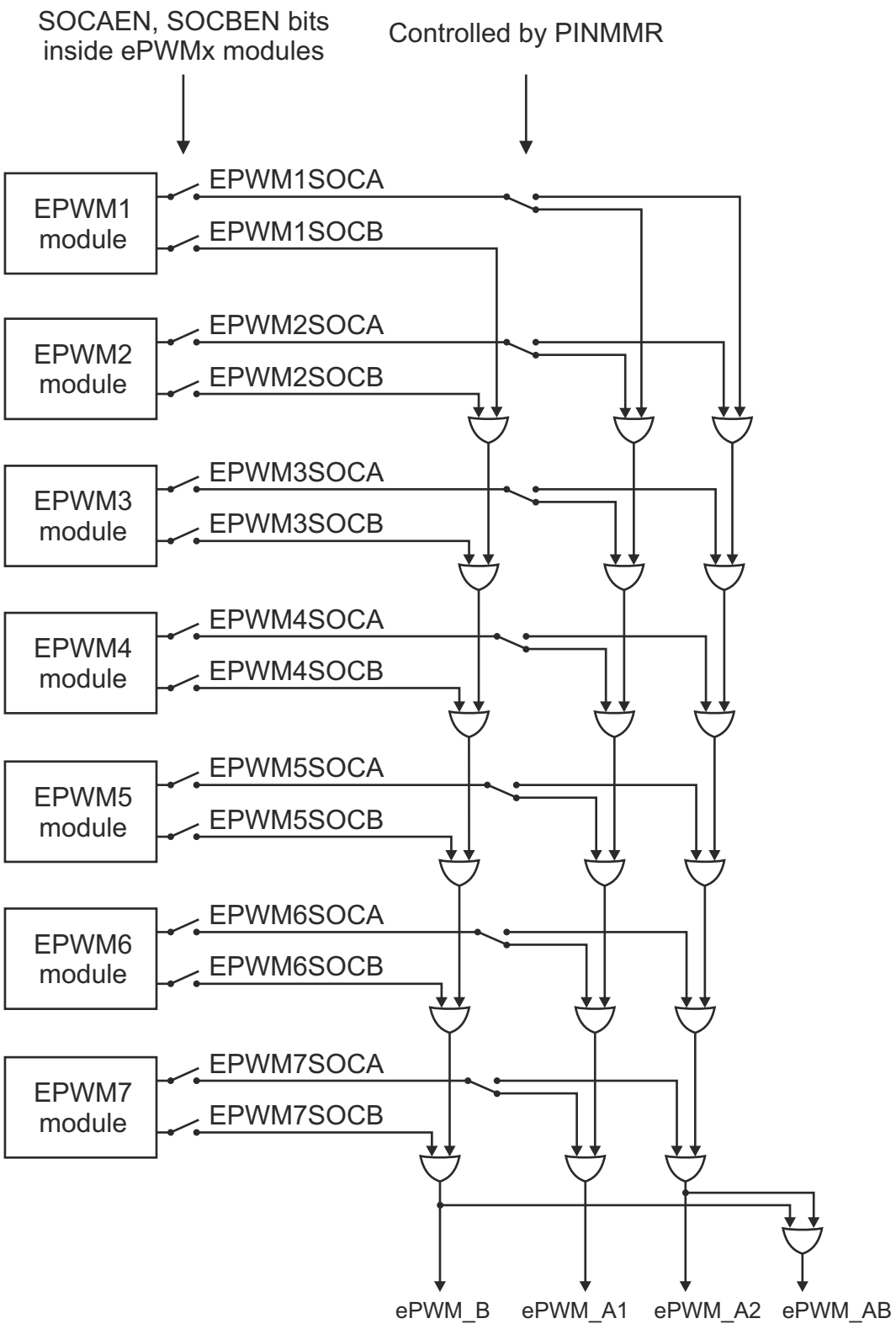

Figure 11-242. Event-Trigger Submodule Inter-Connectivity of ADC Start of Conversion

Copyright © 2025 Texas Instruments Incorporated

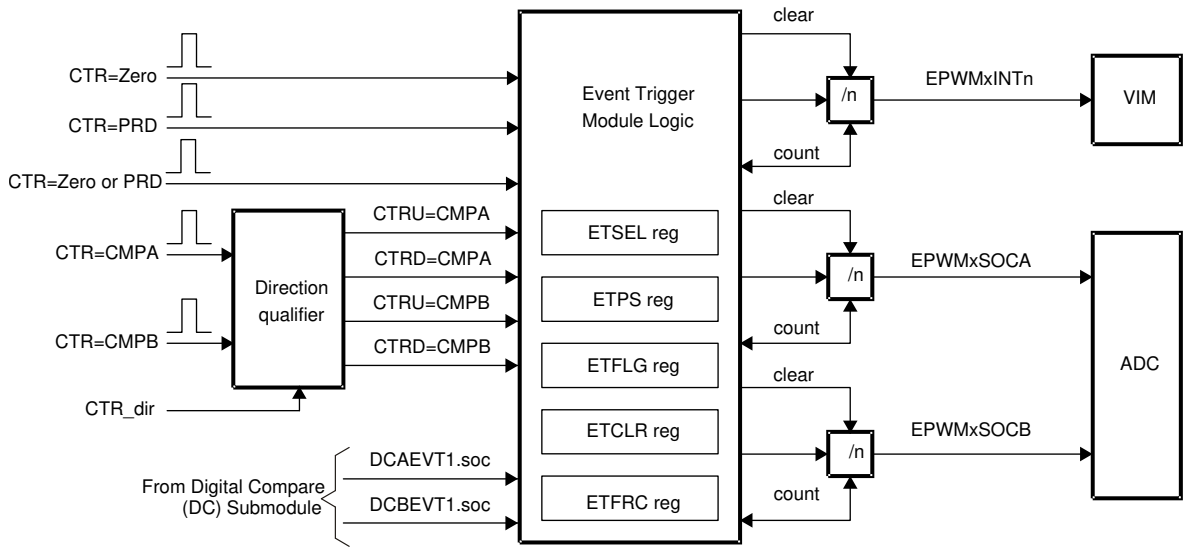

Figure 11-243. Event-Trigger Submodule Showing Event Inputs and Prescaled Outputs

The key registers used to configure the event-trigger submodule are shown in Table 11-1177.

Table 11-1177. Event-Trigger Submodule Registers

Register Name	Address Offset	Shadowed	Description
ETSEL	0x0030	No	Event-trigger Selection Register
ETPS	0x0036	No	Event-trigger Prescale Register
ETFLG	0x0034	No	Event-trigger Flag Register
ETCLR	0x003A	No	Event-trigger Clear Register
ETFRC	0x0038	No	Event-trigger Force Register

- ETSEL—This selects which of the possible events will trigger an interrupt or start an ADC conversion
- ETPS—This programs the event prescaling options mentioned above.
- ETFLG—These are flag bits indicating status of the selected and prescaled events.
- ETCLR—These bits allow you to clear the flag bits in the ETFLG register via software.
- ETFRC—These bits allow software forcing of an event. Useful for debugging or s/w intervention.

A more detailed look at how the various register bits interact with the Interrupt and ADC start of conversion logic are shown in Figure 11-244, Figure 11-245, and Figure 11-246.

Figure 11-244 shows the event-trigger's interrupt generation logic. The interrupt-period (ETPS[INTPRD]) bits specify the number of events required to cause an interrupt pulse to be generated. The choices available are:

- Do not generate an interrupt.
- Generate an interrupt on every event
- Generate an interrupt on every second event
- Generate an interrupt on every third event

Which event can cause an interrupt is configured by the interrupt selection (ETSEL[INTSEL]) bits. The event can be one of the following:

- Time-base counter equal to zero (TBCTR = 0x0000).
- Time-base counter equal to period (TBCTR = TBPRD).
- Time-base counter equal to zero or period (TBCTR = 0x0000 || TBCTR = TBPRD)
- Time-base counter equal to the compare A register (CMPA) when the timer is incrementing.
- Time-base counter equal to the compare A register (CMPA) when the timer is decrementing.

Copyright © 2025 Texas Instruments Incorporated

- Time-base counter equal to the compare B register (CMPB) when the timer is incrementing.
- Time-base counter equal to the compare B register (CMPB) when the timer is decrementing.

The number of events that have occurred can be read from the interrupt event counter (ETPS[INTCNT]) register bits. That is, when the specified event occurs the ETPS[INTCNT] bits are incremented until they reach the value specified by ETPS[INTPRD]. When ETPS[INTCNT] = ETPS[INTPRD] the counter stops counting and its output is set. The counter is only cleared when an interrupt is sent to the VIM.

When ETPS[INTCNT] reaches ETPS[INTPRD] the following behaviors will occur:

- If interrupts are enabled, ETSEL[INTEN] = 1 and the interrupt flag is clear, ETFLG[INT] = 0, then an interrupt pulse is generated and the interrupt flag is set, ETFLG[INT] = 1, and the event counter is cleared ETPS[INTCNT] = 0. The counter will begin counting events again.
- If interrupts are disabled, ETSEL[INTEN] = 0, or the interrupt flag is set, ETFLG[INT] = 1, the counter stops counting events when it reaches the period value ETPS[INTCNT] = ETPS[INTPRD].
- If interrupts are enabled, but the interrupt flag is already set, then the counter will hold its output high until the ENTFLG[INT] flag is cleared. This allows for one interrupt to be pending while one is serviced.

Writing to the INTPRD bits will automatically clear the counter INTCNT = 0 and the counter output will be reset (so no interrupts are generated). Writing a 1 to the ETFRC[INT] bit will increment the event counter INTCNT. The counter will behave as described above when INTCNT = INTPRD. When INTPRD = 0, the counter is disabled and hence no events will be detected and the ETFRC[INT] bit is also ignored.

The above definition means that you can generate an interrupt on every event, on every second event, or on every third event. An interrupt cannot be generated on every fourth or more events.

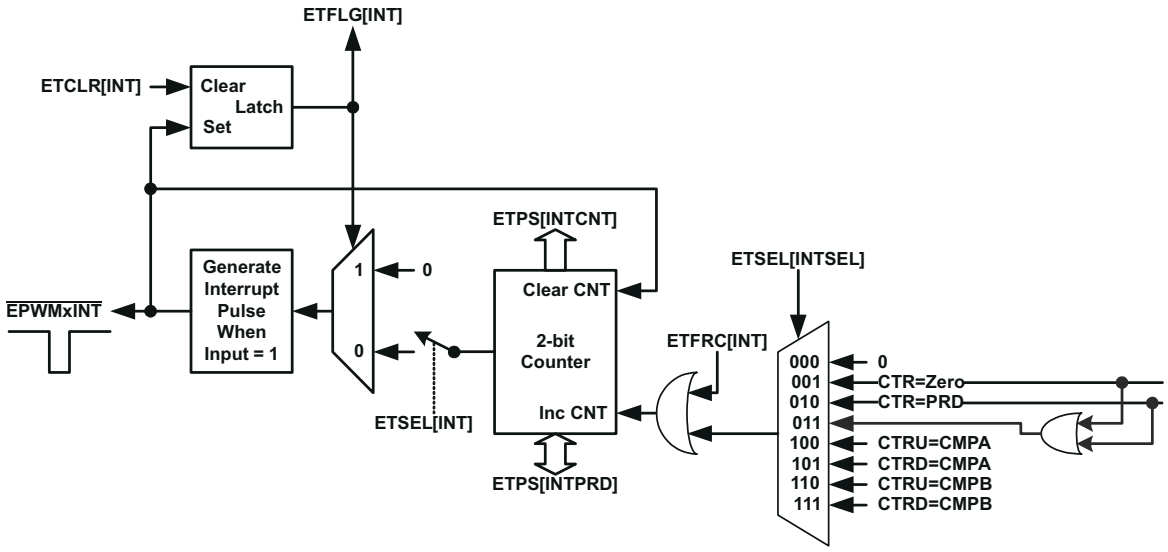

Figure 11-244. Event-Trigger Interrupt Generator

Copyright © 2025 Texas Instruments Incorporated

Figure 11-245 shows the operation of the event-trigger's start-of-conversion-A (SOCA) pulse generator. The ETPS[SOCACNT] counter and ETPS[SOCAPRD] period values behave similarly to the interrupt generator except that the pulses are continuously generated. That is, the pulse flag ETFLG[SOCA] is latched when a pulse is generated, but it does not stop further pulse generation. The enable/disable bit ETSEL[SOCAEN] stops pulse generation, but input events can still be counted until the period value is reached as with the interrupt generation logic. The event that will trigger an SOCA and SOCB pulse can be configured separately in the ETSEL[SOCASEL] and ETSEL[SOCBSEL] bits. The possible events are the same events that can be specified for the interrupt generation logic with the addition of the DCAEVT1.soc and DCBEVT1.soc event signals from the digital compare (DC) submodule.

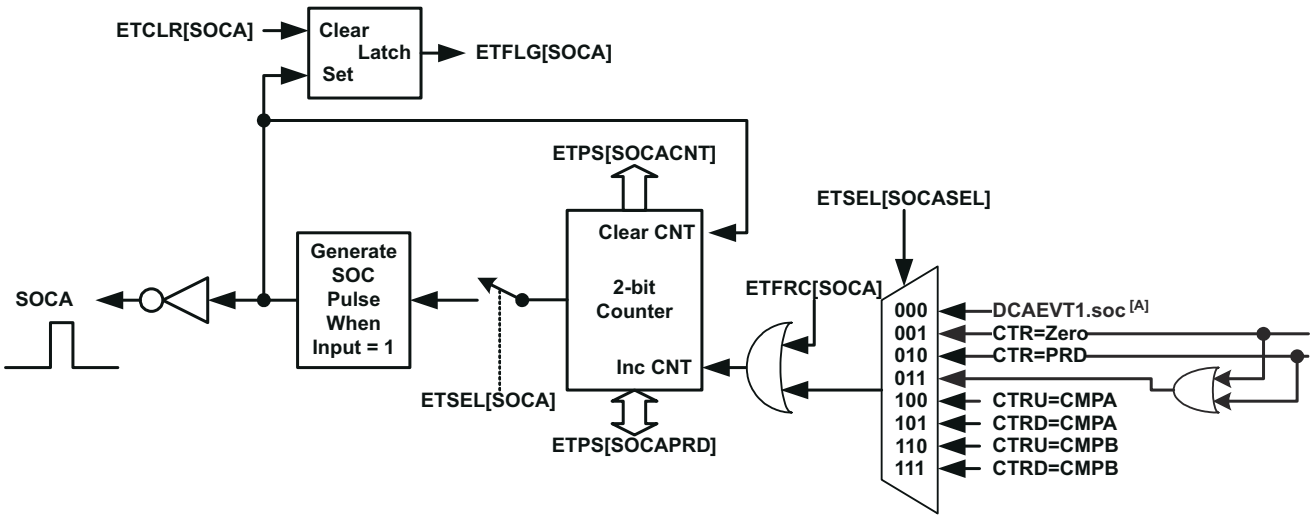

A. The DCAEVT1.soc signals are signals generated by the Digital compare (DC) submodule described later in Section 11.4.2.2.9.

Figure 11-245. Event-Trigger SOCA Pulse Generator

Figure 11-246 shows the operation of the event-trigger's start-of-conversion-B (SOCB) pulse generator. The event-trigger's SOCB pulse generator operates the same way as the SOCA.

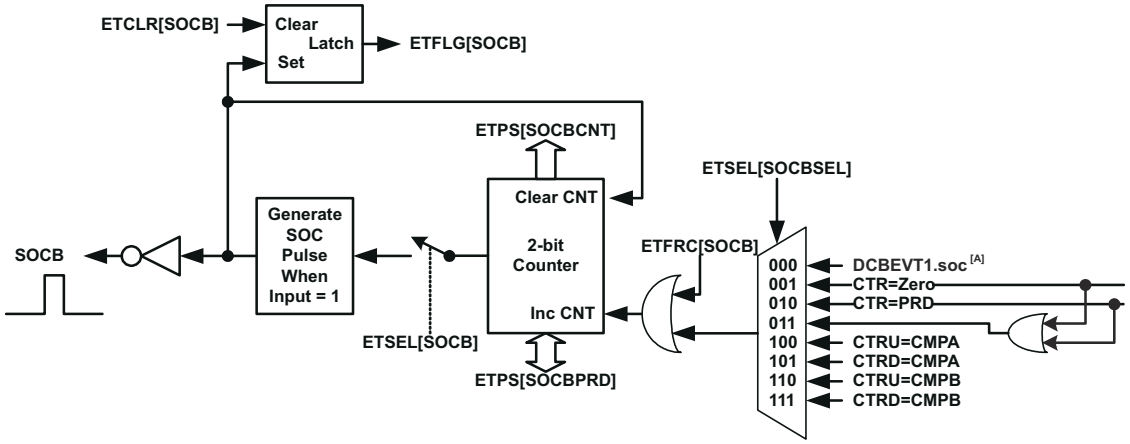

A. The DCBEVT1.soc signals are signals generated by the Digital compare (DC) submodule described later in Section 11.4.2.2.9.

Figure 11-246. Event-Trigger SOCB Pulse Generator

Copyright © 2025 Texas Instruments Incorporated

11.4.2.2.9 Digital Compare (DC) Submodule

Figure 11-247 illustrates where the digital compare (DC) submodule signals interface to other submodules in the ePWM system.

The digital compare (DC) submodule compares signals external to the ePWM module to directly generate PWM events/actions that then feed to the event-trigger, trip-zone, and time-base submodules. Additionally, blanking window functionality is supported to filter noise or unwanted pulses from the DC event signals.

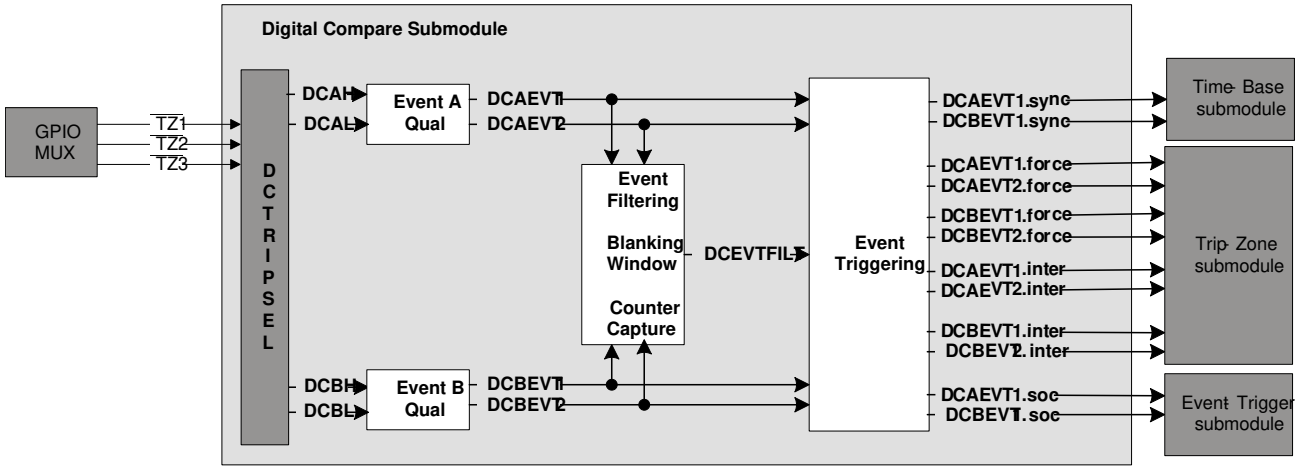

Figure 11-247. Digital-Compare Submodule High-Level Block Diagram

11.4.2.2.9.1 Purpose of the Digital Compare Submodule

The key functions of the digital compare submodule are:

- $\overline{TZ1}$, $\overline{TZ2}$, and $\overline{TZ3}$ inputs generate Digital Compare A High/Low (DCAH, DCAL) and Digital Compare B High/Low (DCBH, DCBL) signals.
- DCAH/L and DCBH/L signals trigger events which can then either be filtered or fed directly to the trip-zone, event-trigger, and time-base submodules to:
  - generate a trip zone interrupt
  - generate an ADC start of conversion
  - force an event
  - generate a synchronization event for synchronizing the ePWM module TBCTR.
- Event filtering (blanking window logic) can optionally blank the input signal to remove noise.

Copyright © 2025 Texas Instruments Incorporated

11.4.2.2.9.2 Controlling and Monitoring the Digital Compare Submodule

The digital compare submodule operation is controlled and monitored through the following registers:

Table 11-1178. Digital Compare Submodule Registers

Register Name	Address Offset	Shadowed	Description
TZDCSEL(1) (2)	0x0024	No	Trip Zone Digital Compare Select Register
DCTRIPSEL(1)	0x0062	No	Digital Compare Trip Select Register
DCACTL(1)	0x0060	No	Digital Compare A Control Register
DCBCTL(1)	0x0066	No	Digital Compare B Control Register
DCFCTL(1)	0x0064	No	Digital Compare Filter Control Register
DCCAPCTL(1)	0x006A	No	Digital Compare Capture Control Register
DCFOFFSET	0x0068	Writes	Digital Compare Filter Offset Register
DCFOFFSETCNT	0x006E	No	Digital Compare Filter Offset Counter Register
DCFWINDOW	0x006C	No	Digital Compare Filter Window Register
DCFWINDOWCNT	0x0072	No	Digital Compare Filter Window Counter Register
DCCAP	0x0070	Yes	Digital Compare Counter Capture Register

(1) These registers are writable only in privileged mode.
(2) The TZDCSEL register is part of the trip-zone submodule but is mentioned again here because of its functional significance to the digital compare submodule.

11.4.2.2.9.3 Operation Highlights of the Digital Compare Submodule

The following sections describe the operational highlights and configuration options for the digital compare submodule.

11.4.2.2.9.3.1 Digital Compare Events

As illustrated in Figure 11-247, trip zone inputs ($\overline{TZ1}$, $\overline{TZ2}$, and $\overline{TZ3}$) can be selected via the DCTRIPSEL bits to generate the Digital Compare A High and Low (DCAH/L) and Digital Compare B High and Low (DCBH/L) signals. Then, the configuration of the TZDCSEL register qualifies the actions on the selected DCAH/L and DCBH/L signals, which generate the DCAEVT1/2 and DCBEVT1/2 events (Event Qualification A and B).

Note

The $\overline{TZn}$ signals, when used as a DCEVT tripping functions, are treated as a normal input signal and can be defined to be active high or active low inputs. EPWM outputs are asynchronously tripped when either the $\overline{TZn}$, DCAEVTx.force, or DCBEVTx.force signals are active. For the condition to remain latched, a minimum of 3 × TBCLK sync pulse width is required. If pulse width is < 3 × TBCLK sync pulse width, the trip condition may or may not get latched by CBC or OST latches.

Copyright © 2025 Texas Instruments Incorporated

The DCAEVT1/2 and DCBEVT1/2 events can then be filtered to provide a filtered version of the event signals (DCEVTFILT) or the filtering can be bypassed. Filtering is discussed further in Section 11.4.2.2.9.3.2. Either the DCAEVT1/2 and DCBEVT1/2 event signals or the filtered DCEVTFILT event signals can generate a force to the trip zone module, a TZ interrupt, an ADC SOC, or a PWM sync signal.

- **force signal:**

  DCAEVT1/2.force signals force trip zone conditions which either directly influence the output on the EPWMxA pin (via TZCTL[DCAEVT1 or DCAEVT2] configurations) or, if the DCAEVT1/2 signals are selected as one-shot or cycle-by-cycle trip sources (via the TZSEL register), the DCAEVT1/2.force signals can effect the trip action via the TZCTL[TZA] configuration. The DCBEVT1/2.force signals behaves similarly, but affect the EPWMxB output pin instead of the EPWMxA output pin.

  The priority of conflicting actions on the TZCTL register is as follows (highest priority overrides lower priority):

  Output EPWMxA: TZA (highest) -> DCAEVT1 -> DCAEVT2 (lowest)

  Output EPWMxB: TZB (highest) -> DCBEVT1 -> DCBEVT2 (lowest)
- **interrupt signal:**

  DCAEVT1/2.interrupt signals generate trip zone interrupts to the VIM. To enable the interrupt, the user must set the DCAEVT1, DCAEVT2, DCBEVT1, or DCBEVT2 bits in the TZEINT register. Once one of these events occurs, an EPWMxTZINT interrupt is triggered, and the corresponding bit in the TZCLR register must be set in order to clear the interrupt.
- **soc signal:**

  The DCAEVT1.soc signal interfaces with the event-trigger submodule and can be selected as an event which generates an ADC start-of-conversion-A (SOCA) pulse via the ETSEL[SOCASEL] bit. Likewise, the DCBEVT1.soc signal can be selected as an event which generates an ADC start-of-conversion-B (SOCB) pulse via the ETSEL[SOCBSEL] bit.
- **sync signal:**

  The DCAEVT1.sync and DCBEVT1.sync events are ORed with the EPWMxSYNCI input signal and the TBCTL[SWFSYNC] signal to generate a synchronization pulse to the time-base counter.

Figure 11-248 and Figure 11-249 show how the DCAEVT1, DCAEVT2, or DCEVTFLT signals are processed to generate the digital compare A event force, interrupt, soc and sync signals.

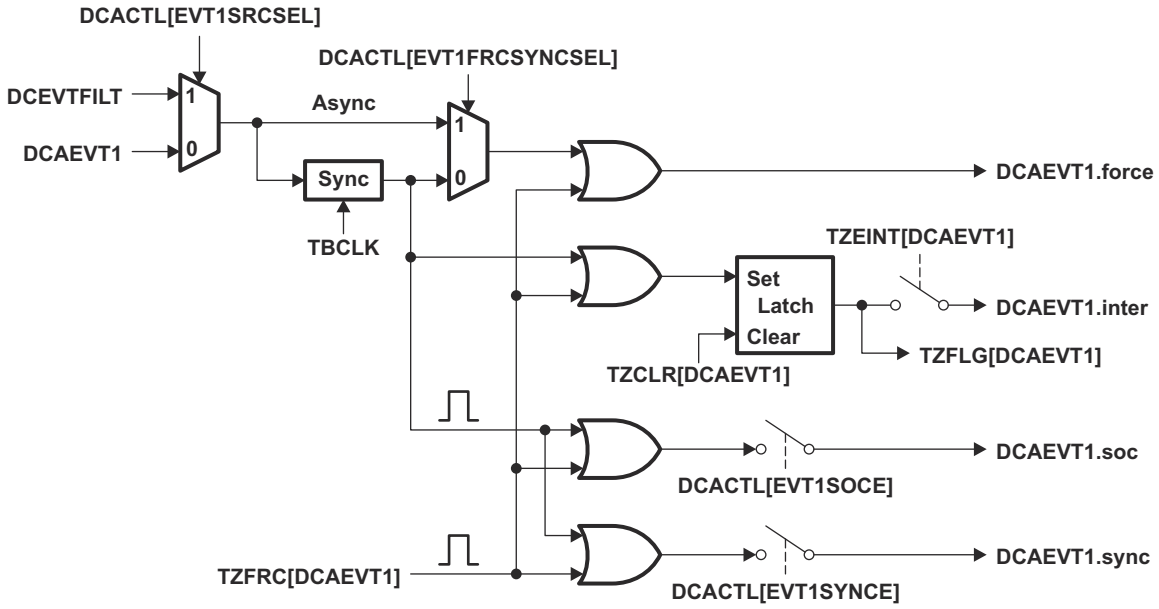

Figure 11-248. DCAEVT1 Event Triggering

Copyright © 2025 Texas Instruments Incorporated

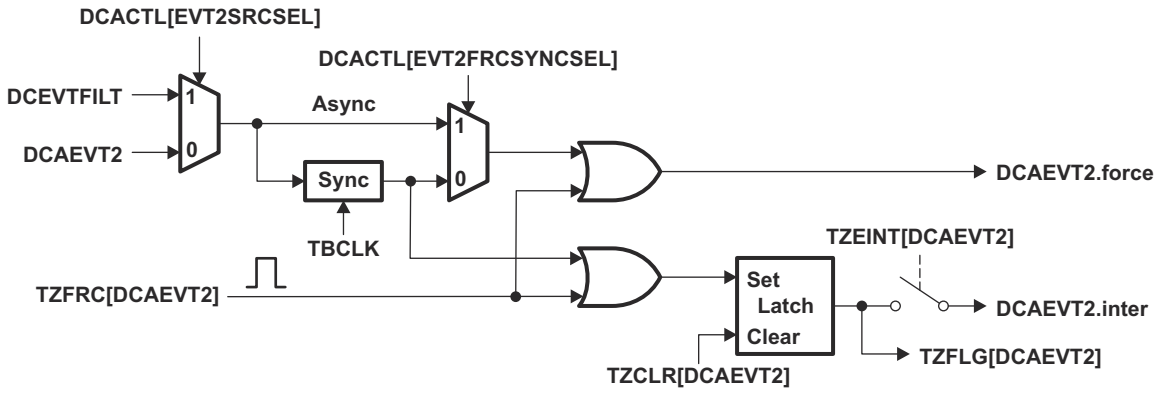

Figure 11-249. DCAEVT2 Event Triggering

Figure 11-250 and Figure 11-251 show how the DCBEVT1, DCBEVT2, or DCEVTFLT signals are processed to generate the digital compare B event force, interrupt, soc, and sync signals.

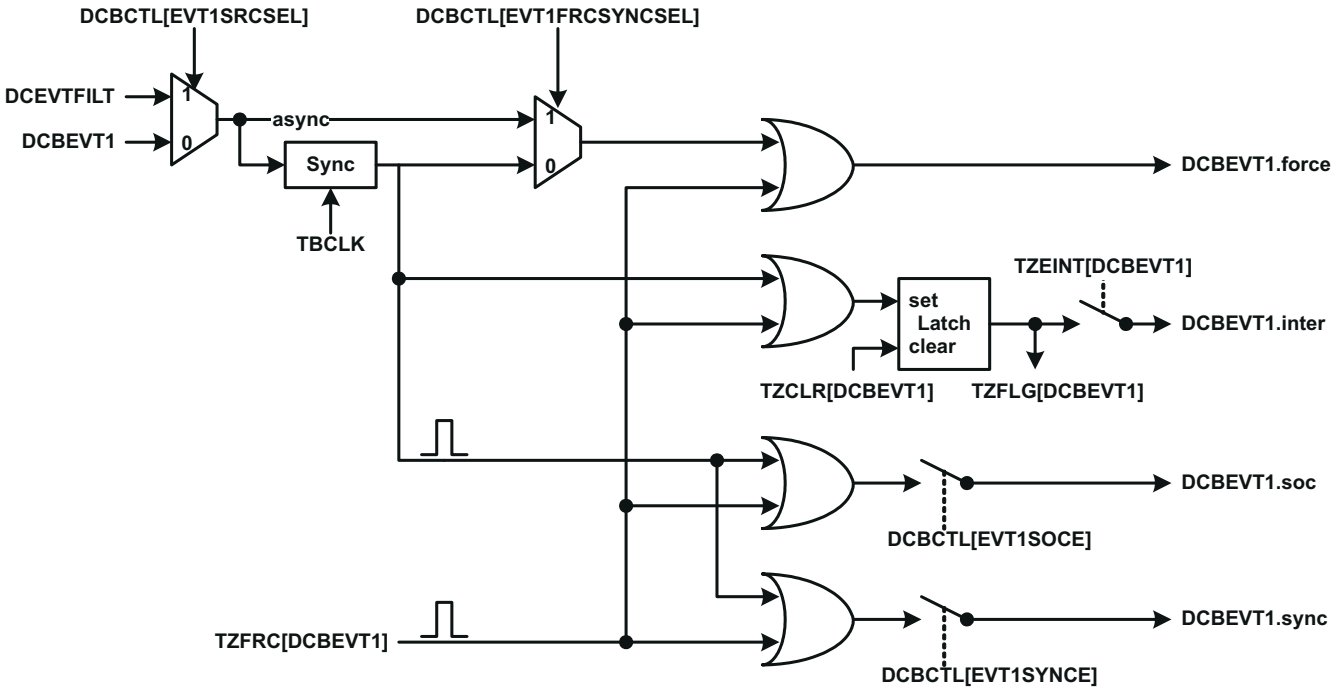

Figure 11-250. DCBEVT1 Event Triggering

Copyright © 2025 Texas Instruments Incorporated

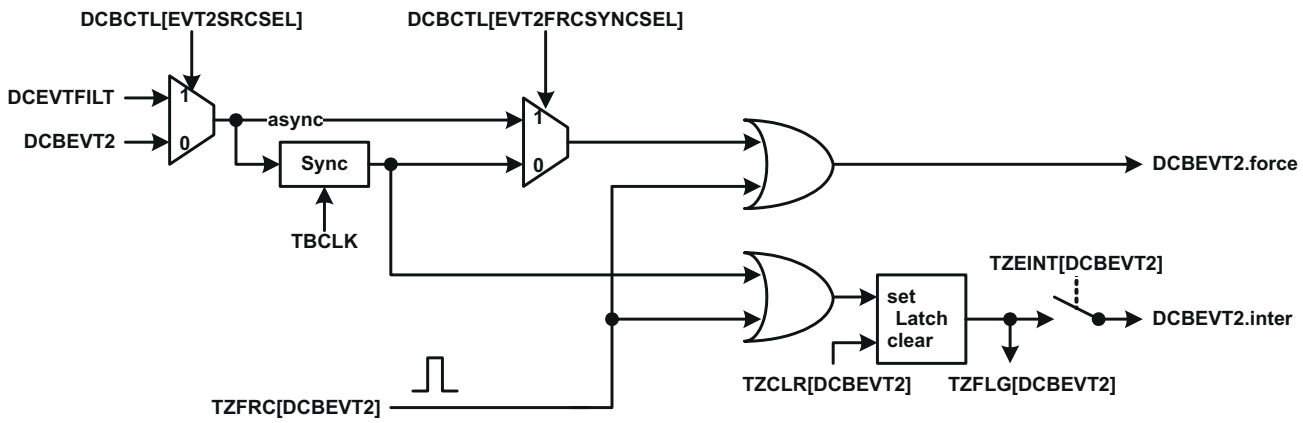

Figure 11-251. DCBEVT2 Event Triggering

11.4.2.2.9.3.2 Event Filtering

The DCAEVT1/2 and DCBEVT1/2 events can be filtered via event filtering logic to remove noise by optionally blanking events for a certain period of time. This is useful for cases where the analog comparator outputs may be selected to trigger DCAEVT1/2 and DCBEVT1/2 events, and the blanking logic is used to filter out potential noise on the signal prior to tripping the PWM outputs or generating an interrupt or ADC start-of-conversion. The event filtering can also capture the TBCTR value of the trip event. Figure 11-252 shows the details of the event filtering logic.

If the blanking logic is enabled, one of the digital compare events – DCAEVT1, DCAEVT2, DCBEVT1, DCBEVT2 – is selected for filtering. The blanking window, which filters out all event occurrences on the signal while it is active, will be aligned to either a CTR = PRD pulse or a CTR = 0 pulse (configured by the DCFCTL[PULSESEL] bits). An offset value in TBCLK counts is programmed into the DCFOFFSET register, which determines at what point after the CTR = PRD or CTR = 0 pulse the blanking window starts. The duration of the blanking window, in number of TBCLK counts after the offset counter expires, is written to the DCFWINDOW register by the application. During the blanking window, all events are ignored. Before and after the blanking window ends, events can generate soc, sync, interrupt, and force signals as before.

Figure 11-253 illustrates several timing conditions for the offset and blanking window within an ePWM period. Notice that if the blanking window crosses the CTR = 0 or CTR = PRD boundary, the next window still starts at the same offset value after the CTR = 0 or CTR = PRD pulse.

Copyright © 2025 Texas Instruments Incorporated

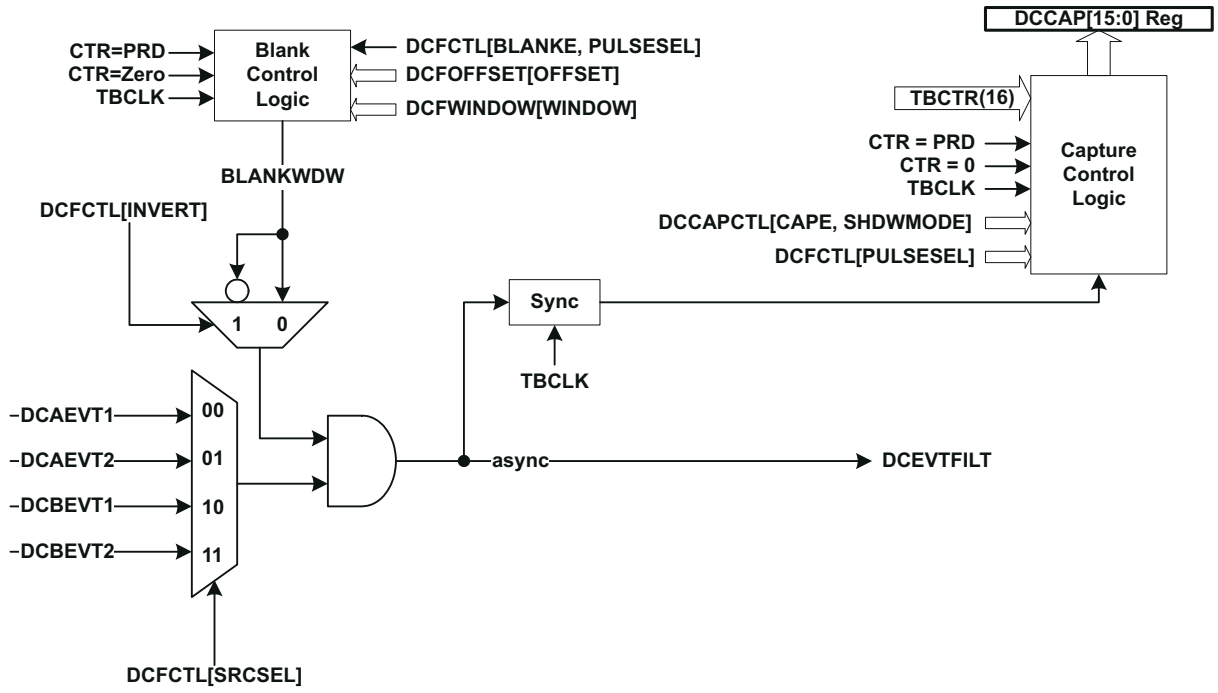

Figure 11-252. Event Filtering

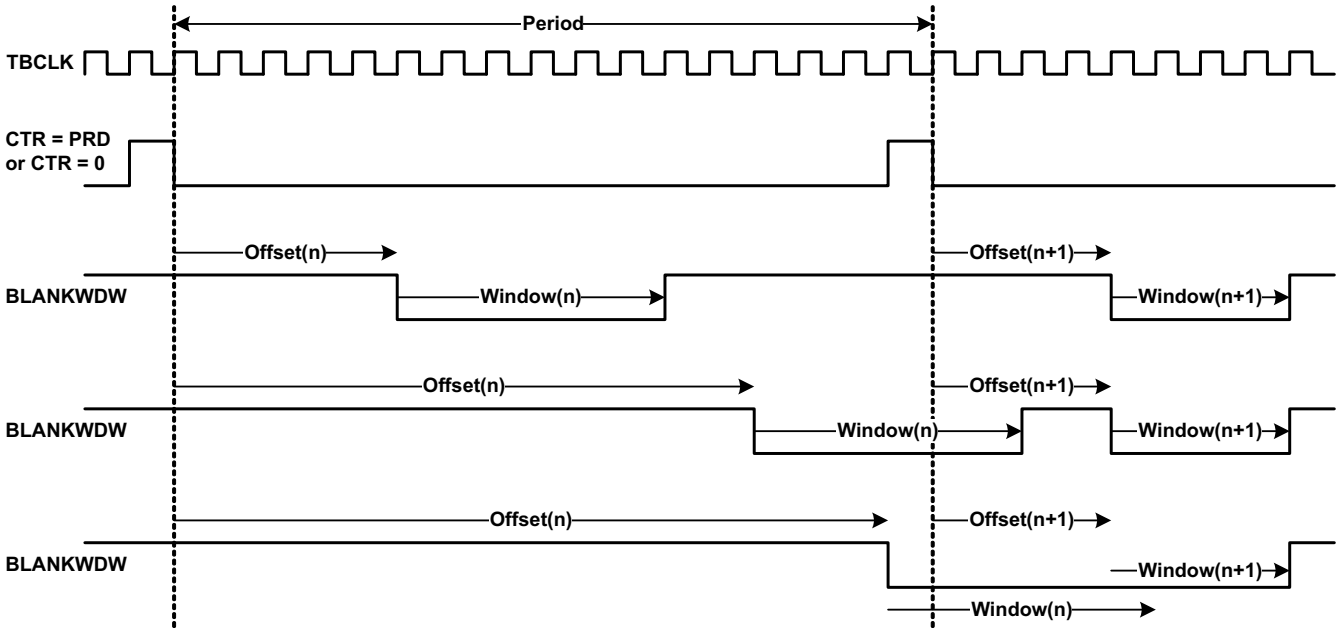

Figure 11-253. Blanking Window Timing Diagram

Copyright © 2025 Texas Instruments Incorporated

11.4.2.2.10 Proper Interrupt Initialization Procedure

When the ePWM peripheral clock is enabled it may be possible that interrupt flags may be set due to spurious events due to the ePWM registers not being properly initialized. The proper procedure for initializing the ePWM peripheral is as follows:

1. Disable global interrupts (CPU INTM flag)
2. Disable ePWM interrupts
3. Set TBCLKSYNC = 0
4. Initialize peripheral registers
5. Set TBCLKSYNC = 1
6. Clear any spurious ePWM flags (including interrupt flags)
7. Enable ePWM interrupts
8. Enable global interrupts

11.4.2.2.11

11.4.2.3 Application Examples

An ePWM module has all the local resources necessary to operate completely as a standalone module or to operate in synchronization with other identical ePWM modules.

11.4.2.3.1 Overview of Multiple Modules

Previously in this chapter, all discussions have described the operation of a single module. To facilitate the understanding of multiple modules working together in a system, the ePWM module described in reference is represented by the more simplified block diagram shown in Figure 11-254. This simplified ePWM block shows only the key resources needed to explain how a multiswitch power topology is controlled with multiple ePWM modules working together.

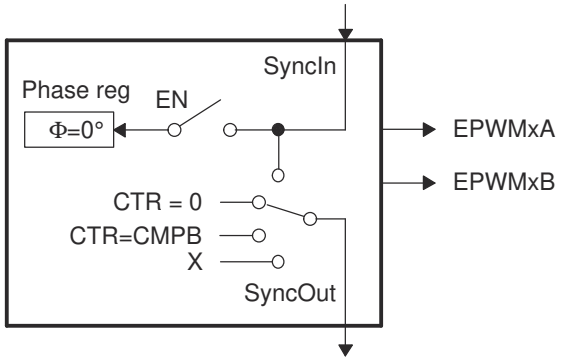

Figure 11-254. Simplified ePWM Module

Copyright © 2025 Texas Instruments Incorporated

11.4.2.3.2 Key Configuration Capabilities

The key configuration choices available to each module are as follows:

- Options for SyncIn
  - Load own counter with phase register on an incoming sync strobe—enable (EN) switch closed
  - Do nothing or ignore incoming sync strobe—enable switch open
  - Sync flow-through - SyncOut connected to SyncIn
  - Controller mode, provides a sync at PWM boundaries—SyncOut connected to CTR = PRD
  - Controller mode, provides a sync at any programmable point in time—SyncOut connected to CTR = CMPB
  - Module is in standalone mode and provides No sync to other modules—SyncOut connected to X (disabled)
- Options for SyncOut
  - Sync flow-through - SyncOut connected to SyncIn
  - Controller mode, provides a sync at PWM boundaries—SyncOut connected to CTR = PRD
  - Controller mode, provides a sync at any programmable point in time—SyncOut connected to CTR = CMPB
  - Module is in standalone mode and provides No sync to other modules—SyncOut connected to X (disabled)

For each choice of SyncOut, a module may also choose to load its own counter with a new phase value on a SyncIn strobe input or choose to ignore it, that is, via the enable switch. Although various combinations are possible, the two most common—controller module and target module modes—are shown in Figure 11-255.

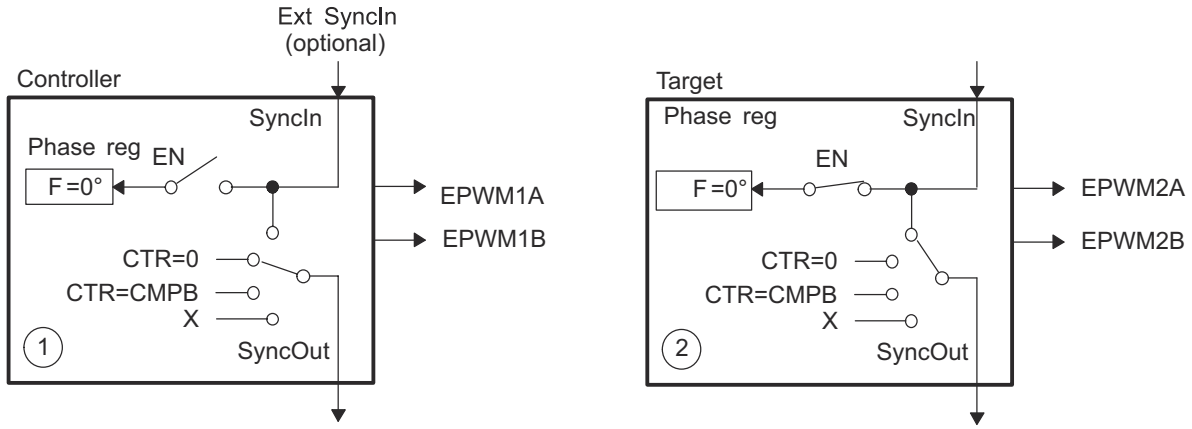

Figure 11-255. EPWM1 Configured as a Typical Controller, EPWM2 Configured as a Target

Copyright © 2025 Texas Instruments Incorporated

11.4.2.3.3 Controlling Multiple Buck Converters With Independent Frequencies

One of the simplest power converter topologies is the buck. A single ePWM module configured as a controller can control two buck stages with the same PWM frequency. If independent frequency control is required for each buck converter, then one ePWM module must be allocated for each converter stage. Figure 11-256 shows four buck stages, each running at independent frequencies. In this case, all four ePWM modules are configured as Controllers and no synchronization is used. Figure 11-257 shows the waveforms generated by the setup shown in Figure 11-256; note that only three waveforms are shown, although there are four stages.

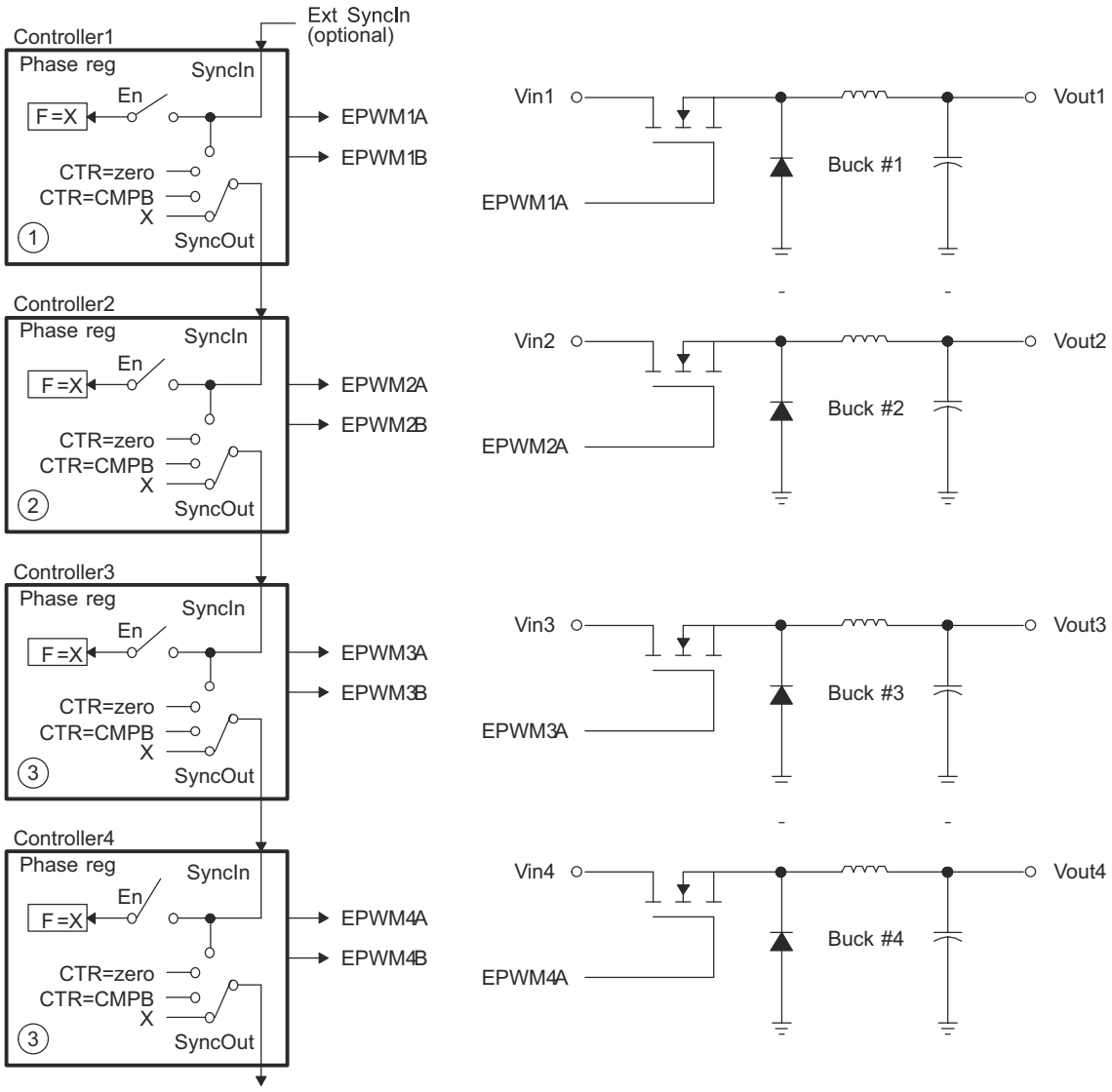

A. Θ = X indicates value in phase register is a "don't care"

Figure 11-256. Control of Four Buck Stages. Here $F_{PWM1} \neq F_{PWM2} \neq F_{PWM3} \neq F_{PWM4}$

Copyright © 2025 Texas Instruments Incorporated

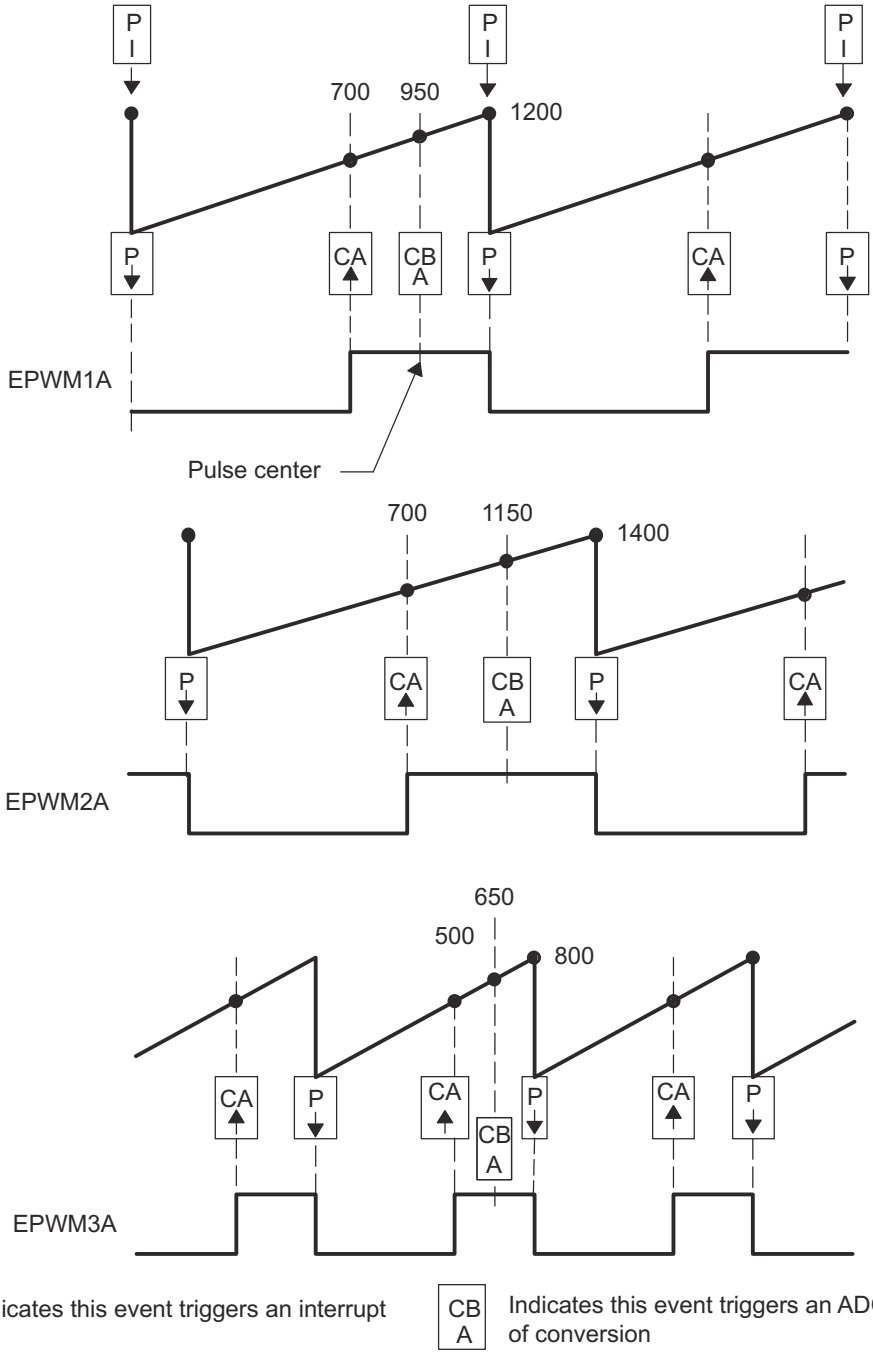

Figure 11-257. Buck Waveforms for Figure 11-256 (Note: Only three bucks shown here)

Copyright © 2025 Texas Instruments Incorporated

Example 11-9. Configuration for Example in Figure 11-257

```
//=====================================================================
// (Note: code for only 3 modules shown)
// Initialization Time
//=======================
// EPWM Module 1 config
   EPwm1Regs.TBPRD = 1200;                          // Period = 1201 TBCLK counts
   EPwm1Regs.TBPHS.half.TBPHS = 0;                  // Set Phase register to zero
   EPwm1Regs.TBCTL.bit.CTRMODE = TB_COUNT_UP;       // Asymmetrical mode
   EPwm1Regs.TBCTL.bit.PHSEN = TB_DISABLE;          // Phase loading disabled
   EPwm1Regs.TBCTL.bit.PRDLD = TB_SHADOW;
   EPwm1Regs.TBCTL.bit.SYNCOSEL = TB_SYNC_DISABLE;
   EPwm1Regs.CMPCTL.bit.SHDWAMODE = CC_SHADOW;
   EPwm1Regs.CMPCTL.bit.SHDWBMODE = CC_SHADOW;
   EPwm1Regs.CMPCTL.bit.LOADAMODE = CC_CTR_ZERO;    // load on CTR=Zero
   EPwm1Regs.CMPCTL.bit.LOADBMODE = CC_CTR_ZERO;    // load on CTR=Zero
   EPwm1Regs.AQCTLA.bit.PRD = AQ_CLEAR;
   EPwm1Regs.AQCTLA.bit.CAU = AQ_SET;
// EPWM Module 2 config
   EPwm2Regs.TBPRD = 1400;                          // Period = 1401 TBCLK counts
   EPwm2Regs.TBPHS.half.TBPHS = 0;                  // Set Phase register to zero
   EPwm2Regs.TBCTL.bit.CTRMODE = TB_COUNT_UP;       // Asymmetrical mode
   EPwm2Regs.TBCTL.bit.PHSEN = TB_DISABLE;          // Phase loading disabled
   EPwm2Regs.TBCTL.bit.PRDLD = TB_SHADOW;
   EPwm2Regs.TBCTL.bit.SYNCOSEL = TB_SYNC_DISABLE;
   EPwm2Regs.CMPCTL.bit.SHDWAMODE = CC_SHADOW;
   EPwm2Regs.CMPCTL.bit.SHDWBMODE = CC_SHADOW;
   EPwm2Regs.CMPCTL.bit.LOADAMODE = CC_CTR_ZERO;    // load on CTR=Zero
   EPwm2Regs.CMPCTL.bit.LOADBMODE = CC_CTR_ZERO;    // load on CTR=Zero
   EPwm2Regs.AQCTLA.bit.PRD = AQ_CLEAR;
   EPwm2Regs.AQCTLA.bit.CAU = AQ_SET;
// EPWM Module 3 config
   EPwm3Regs.TBPRD = 800;                           // Period = 801 TBCLK counts
   EPwm3Regs.TBPHS.half.TBPHS = 0;                  // Set Phase register to zero
   EPwm3Regs.TBCTL.bit.CTRMODE = TB_COUNT_UP;
   EPwm3Regs.TBCTL.bit.PHSEN = TB_DISABLE;          // Phase loading disabled
   EPwm3Regs.TBCTL.bit.PRDLD = TB_SHADOW;
   EPwm3Regs.TBCTL.bit.SYNCOSEL = TB_SYNC_DISABLE;
   EPwm3Regs.CMPCTL.bit.SHDWAMODE = CC_SHADOW;
   EPwm3Regs.CMPCTL.bit.SHDWBMODE = CC_SHADOW;
   EPwm3Regs.CMPCTL.bit.LOADAMODE = CC_CTR_ZERO;    // load on CTR=Zero
   EPwm3Regs.CMPCTL.bit.LOADBMODE = CC_CTR_ZERO;    // load on CTR=Zero
   EPwm3Regs.AQCTLA.bit.PRD = AQ_CLEAR;
   EPwm3Regs.AQCTLA.bit.CAU = AQ_SET;
//
// Run Time (Note: Example execution of one run-time instant)
//=====================================================
   EPwm1Regs.CMPA.half.CMPA = 700;                  // adjust duty for output EPWM1A
   EPwm2Regs.CMPA.half.CMPA = 700;                  // adjust duty for output EPWM2A
   EPwm3Regs.CMPA.half.CMPA = 500;                  // adjust duty for output EPWM3A
```


Copyright © 2025 Texas Instruments Incorporated

11.4.2.3.4 Controlling Multiple Buck Converters With Same Frequencies

If synchronization is a requirement, ePWM module 2 can be configured as a target and can operate at integer multiple (N) frequencies of module 1. The sync signal from controller to target ensures these modules remain locked. Figure 11-258 shows such a configuration; Figure 11-259 shows the waveforms generated by the configuration.

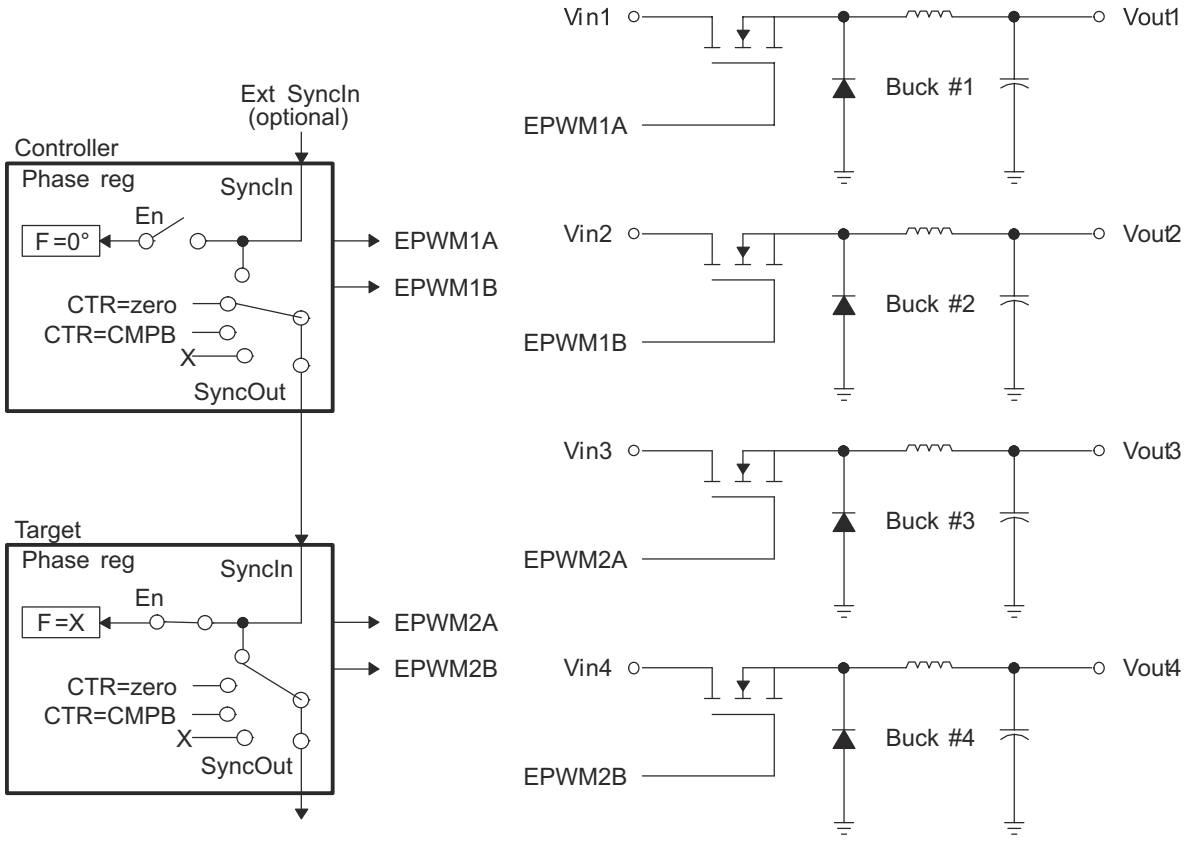

Figure 11-258. Control of Four Buck Stages. (Note: F_{PWM2} = N x F_{PWM1})

Copyright © 2025 Texas Instruments Incorporated

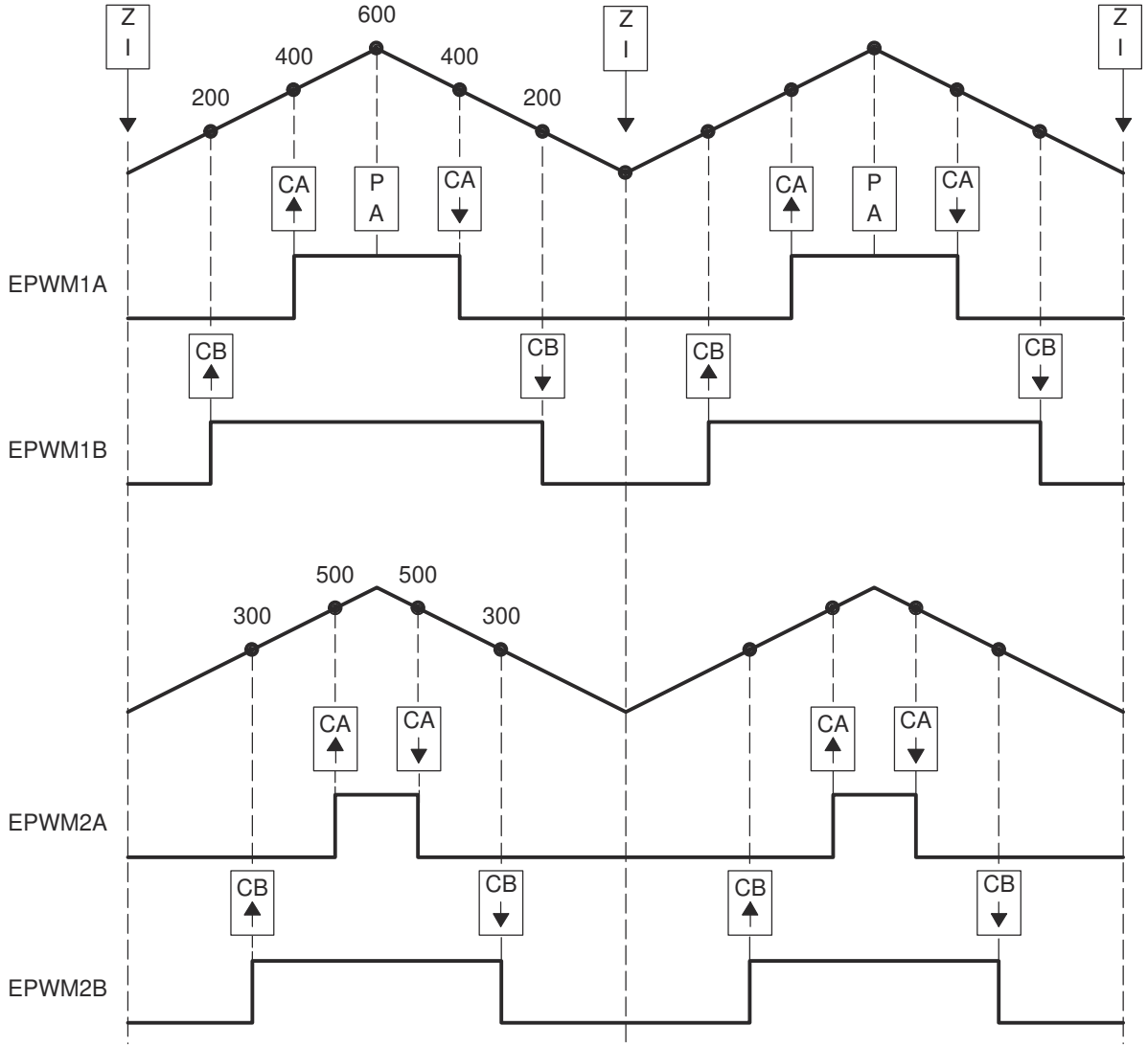

Figure 11-259. Buck Waveforms for Figure 11-258 (Note: $F_{PWM2} = F_{PWM1)}$)

Copyright © 2025 Texas Instruments Incorporated

Example 11-10. Code Snippet for Configuration in Figure 11-258

```
//=======================
// EPWM Module 1 config
     EPwm1Regs.TBPRD = 600;                          // Period = 1200 TBCLK counts
     EPwm1Regs.TBPHS.half.TBPHS = 0;                 // Set Phase register to zero
     EPwm1Regs.TBCTL.bit.CTRMODE = TB_COUNT_UPDOWN; // Symmetrical mode
     EPwm1Regs.TBCTL.bit.PHSEN = TB_DISABLE;         // Controller module
     EPwm1Regs.TBCTL.bit.PRDLD = TB_SHADOW;
     EPwm1Regs.TBCTL.bit.SYNCOSEL = TB_CTR_ZERO;     // Sync down-stream module
     EPwm1Regs.CMPCTL.bit.SHDWAMODE = CC_SHADOW;
     EPwm1Regs.CMPCTL.bit.SHDWBMODE = CC_SHADOW;
     EPwm1Regs.CMPCTL.bit.LOADAMODE = CC_CTR_ZERO;  // load on CTR=Zero
     EPwm1Regs.CMPCTL.bit.LOADBMODE = CC_CTR_ZERO;  // load on CTR=Zero
     EPwm1Regs.AQCTLA.bit.CAU = AQ_SET;              // set actions for EPWM1A
     EPwm1Regs.AQCTLA.bit.CAD = AQ_CLEAR;
     EPwm1Regs.AQCTLB.bit.CBU = AQ_SET;              // set actions for EPWM1B
     EPwm1Regs.AQCTLB.bit.CBD = AQ_CLEAR;
// EPWM Module 2 config
     EPwm2Regs.TBPRD = 600;                          // Period = 1200 TBCLK counts
     EPwm2Regs.TBPHS.half.TBPHS = 0;                 // Set Phase register to zero
     EPwm2Regs.TBCTL.bit.CTRMODE = TB_COUNT_UPDOWN; // Symmetrical mode
     EPwm2Regs.TBCTL.bit.PHSEN = TB_ENABLE;          // Target module
     EPwm2Regs.TBCTL.bit.PRDLD = TB_SHADOW;
     EPwm2Regs.TBCTL.bit.SYNCOSEL = TB_SYNC_IN;      // sync flow-through
     EPwm2Regs.CMPCTL.bit.SHDWAMODE = CC_SHADOW;
     EPwm2Regs.CMPCTL.bit.SHDWBMODE = CC_SHADOW;
     EPwm2Regs.CMPCTL.bit.LOADAMODE = CC_CTR_ZERO;  // load on CTR=Zero
     EPwm2Regs.CMPCTL.bit.LOADBMODE = CC_CTR_ZERO;  // load on CTR=Zero
     EPwm2Regs.AQCTLA.bit.CAU = AQ_SET;              // set actions for EPWM2A
     EPwm2Regs.AQCTLA.bit.CAD = AQ_CLEAR;
     EPwm2Regs.AQCTLB.bit.CBU = AQ_SET;              // set actions for EPWM2B
     EPwm2Regs.AQCTLB.bit.CBD = AQ_CLEAR;
//
// Run Time (Note: Example execution of one run-time instance)
//=====================================================
    EPwm1Regs.CMPA.half.CMPA = 400;                 // adjust duty for output EPWM1A
    EPwm1Regs.CMPB = 200;                           // adjust duty for output EPWM1B
    EPwm2Regs.CMPA.half.CMPA = 500;                 // adjust duty for output EPWM2A
    EPwm2Regs.CMPB = 300;                           // adjust duty for output EPWM2B
```


Copyright © 2025 Texas Instruments Incorporated

11.4.2.3.5 Controlling Multiple Half H-Bridge (HHB) Converters

Topologies that require control of multiple switching elements can also be addressed with these same ePWM modules. It is possible to control a Half-H bridge stage with a single ePWM module. This control can be extended to multiple stages. Figure 11-260 shows control of two synchronized Half-H bridge stages where stage 2 can operate at integer multiple (N) frequencies of stage 1. Figure 11-261 shows the waveforms generated by the configuration shown in Figure 11-260.

Module 2 (target) is configured for Sync flow-through; if required, this configuration allows for a third Half-H bridge to be controlled by PWM module 3 and also, most importantly, to remain in synchronization with controller module 1.

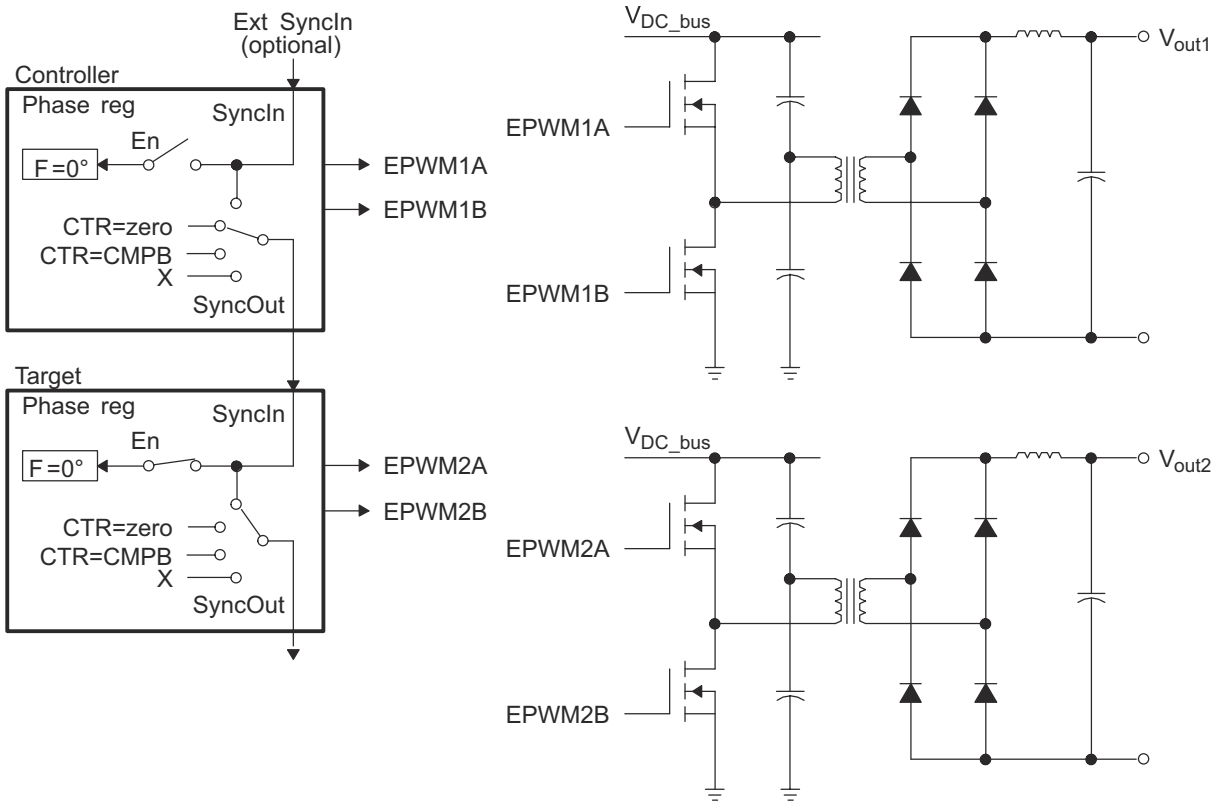

Figure 11-260. Control of Two Half-H Bridge Stages (F_{PWM2} = N x F_{PWM1})

Copyright © 2025 Texas Instruments Incorporated

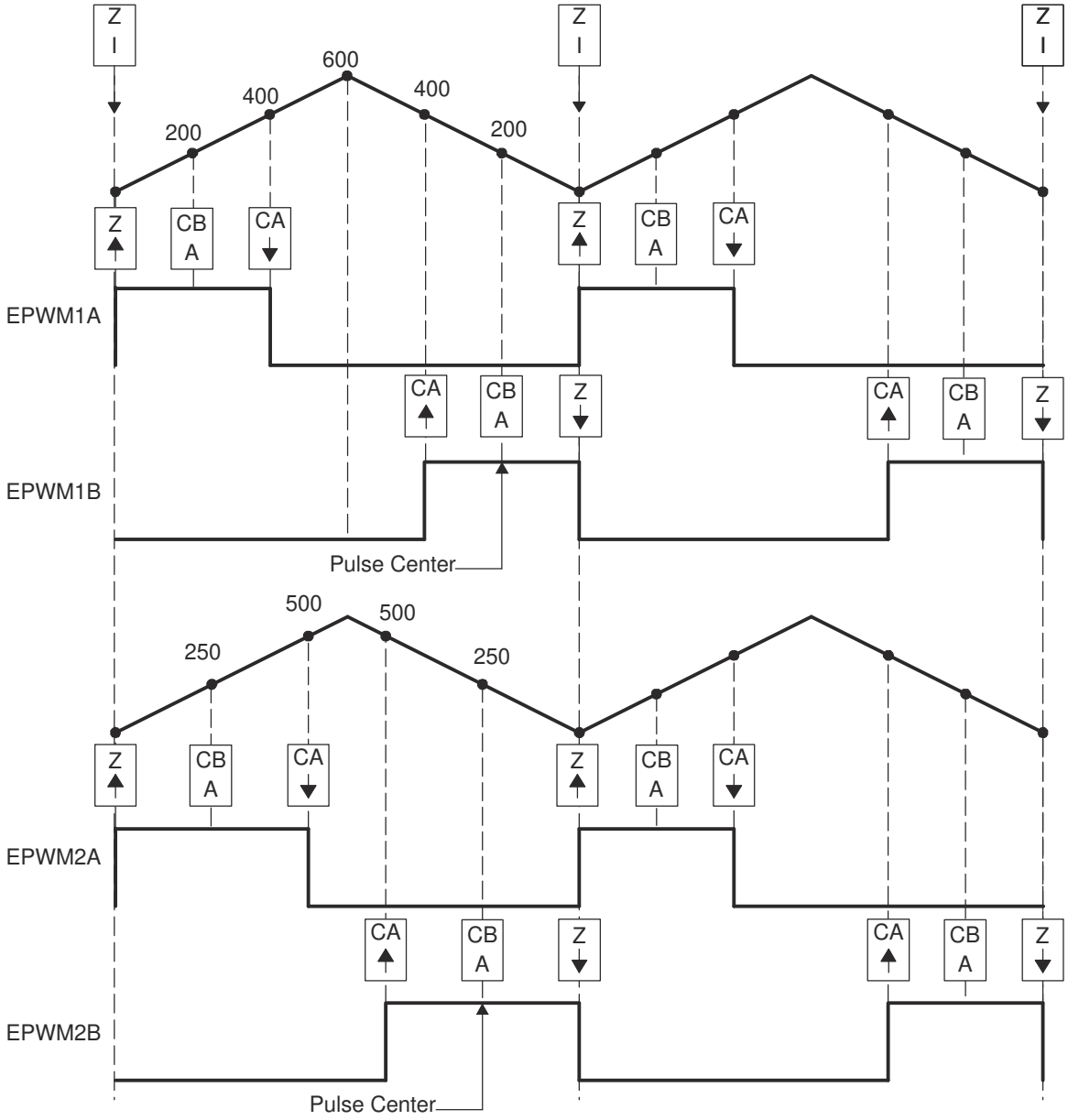

Figure 11-261. Half-H Bridge Waveforms for Figure 11-260 (Note: Here $F_{PWM2} = F_{PWM1}$)

Copyright © 2025 Texas Instruments Incorporated

Example 11-11. Code Snippet for Configuration in Figure 11-260

```
//=============================================================================
// Config
//=============================================================================
// Initialization Time
//=======================
// EPWM Module 1 config
     EPwm1Regs.TBPRD = 600;                           // Period = 1200 TBCLK counts
     EPwm1Regs.TBPHS.half.TBPHS = 0;                  // Set Phase register to zero
     EPwm1Regs.TBCTL.bit.CTRMODE = TB_COUNT_UPDOWN; // Symmetrical mode
     EPwm1Regs.TBCTL.bit.PHSEN = TB_DISABLE;          // Controller module
     EPwm1Regs.TBCTL.bit.PRDLD = TB_SHADOW;
     EPwm1Regs.TBCTL.bit.SYNCOSEL = TB_CTR_ZERO;     // Sync down-stream module
     EPwm1Regs.CMPCTL.bit.SHDWAMODE = CC_SHADOW;
     EPwm1Regs.CMPCTL.bit.SHDWBMODE = CC_SHADOW;
     EPwm1Regs.CMPCTL.bit.LOADAMODE = CC_CTR_ZERO;  // load on CTR=Zero
     EPwm1Regs.CMPCTL.bit.LOADBMODE = CC_CTR_ZERO;  // load on CTR=Zero
     EPwm1Regs.AQCTLA.bit.ZRO = AQ_SET;              // set actions for EPWM1A
     EPwm1Regs.AQCTLA.bit.CAU = AQ_CLEAR;
     EPwm1Regs.AQCTLB.bit.ZRO = AQ_CLEAR;            // set actions for EPWM1B
     EPwm1Regs.AQCTLB.bit.CAD = AQ_SET;
// EPWM Module 2 config
     EPwm2Regs.TBPRD = 600;                           // Period = 1200 TBCLK counts
     EPwm2Regs.TBPHS.half.TBPHS = 0;                  // Set Phase register to zero
     EPwm2Regs.TBCTL.bit.CTRMODE = TB_COUNT_UPDOWN; // Symmetrical mode
     EPwm2Regs.TBCTL.bit.PHSEN = TB_ENABLE;          // Target module
     EPwm2Regs.TBCTL.bit.PRDLD = TB_SHADOW;
     EPwm2Regs.TBCTL.bit.SYNCOSEL = TB_SYNC_IN;      // sync flow-through
     EPwm2Regs.CMPCTL.bit.SHDWAMODE = CC_SHADOW;
     EPwm2Regs.CMPCTL.bit.SHDWBMODE = CC_SHADOW;
     EPwm2Regs.CMPCTL.bit.LOADAMODE = CC_CTR_ZERO;  // load on CTR=Zero
     EPwm2Regs.CMPCTL.bit.LOADBMODE = CC_CTR_ZERO;  // load on CTR=Zero
     EPwm2Regs.AQCTLA.bit.ZRO = AQ_SET;              // set actions for EPWM1A
     EPwm2Regs.AQCTLA.bit.CAU = AQ_CLEAR;
     EPwm2Regs.AQCTLB.bit.ZRO = AQ_CLEAR;            // set actions for EPWM1B
     EPwm2Regs.AQCTLB.bit.CAD = AQ_SET;
//=============================================================
     EPwm1Regs.CMPA.half.CMPA = 400;                  // adjust duty for output EPWM1A & EPWM1B
     EPwm1Regs.CMPB = 200;                            // adjust point-in-time for ADCSOC trigger
     EPwm2Regs.CMPA.half.CMPA = 500;                  // adjust duty for output EPWM2A & EPWM2B
     EPwm2Regs.CMPB = 250;                            // adjust point-in-time for ADCSOC trigger
```

11.4.2.3.5.1

11.4.2.3.6 Controlling Dual 3-Phase Inverters for Motors (ACI and PMSM)

The idea of multiple modules controlling a single power stage can be extended to the 3-phase Inverter case. In such a case, six switching elements can be controlled using three PWM modules, one for each leg of the inverter. Each leg must switch at the same frequency and all legs must be synchronized. A controller + two targets configuration can easily address this requirement. Figure 11-262 shows how six PWM modules can control two independent 3-phase inverters; each running a motor.

As in the cases shown in the previous sections, we have a choice of running each inverter at a different frequency (module 1 and module 4 are controllers as in Figure 11-262), or both inverters can be synchronized by using one controller (module 1) and five targets. In this case, the frequency of modules 4, 5, and 6 (all equal) can be integer multiples of the frequency for modules 1, 2, 3 (also all equal).

Copyright © 2025 Texas Instruments Incorporated

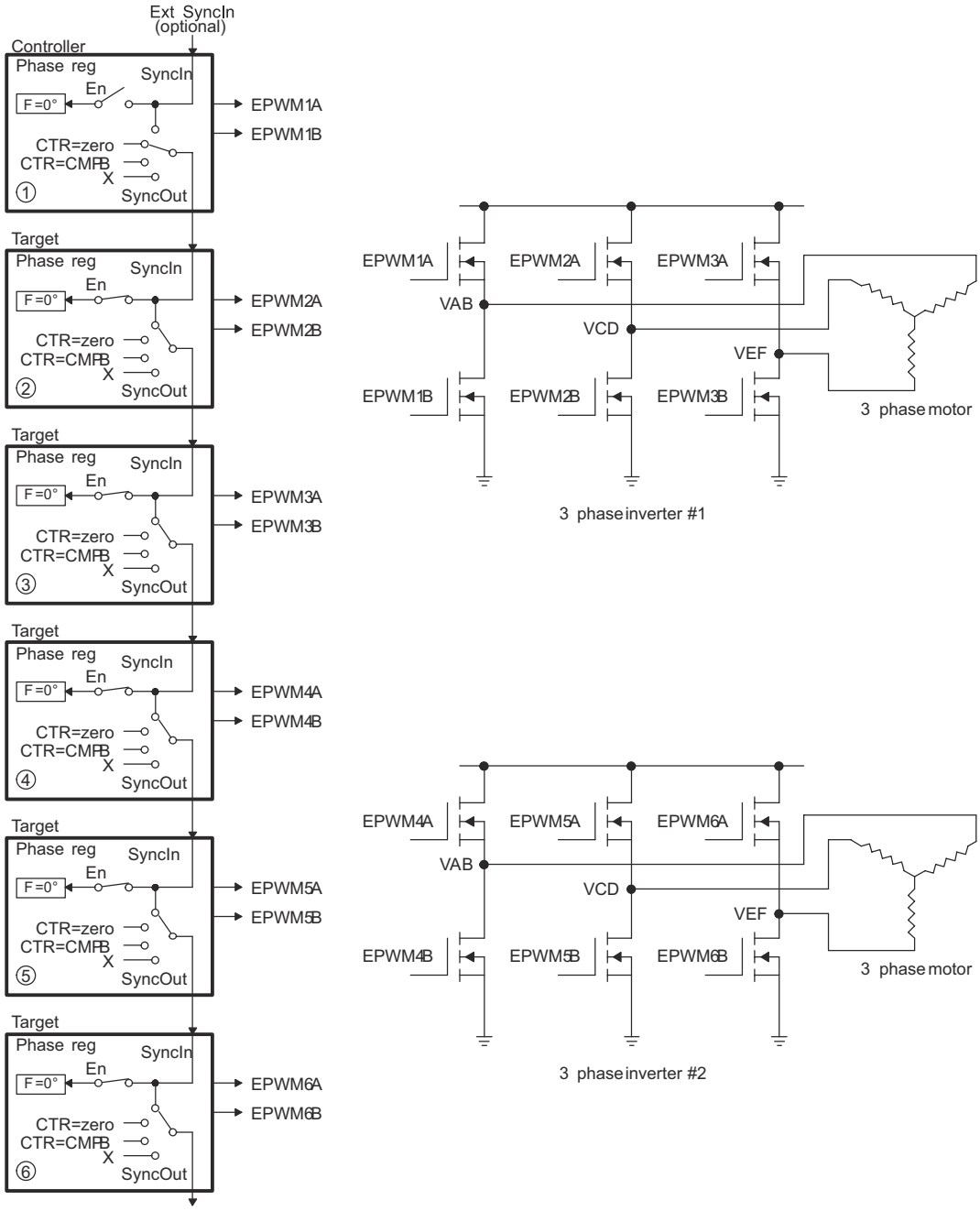

Figure 11-262. Control of Dual 3-Phase Inverter Stages as Is Commonly Used in Motor Control

Copyright © 2025 Texas Instruments Incorporated

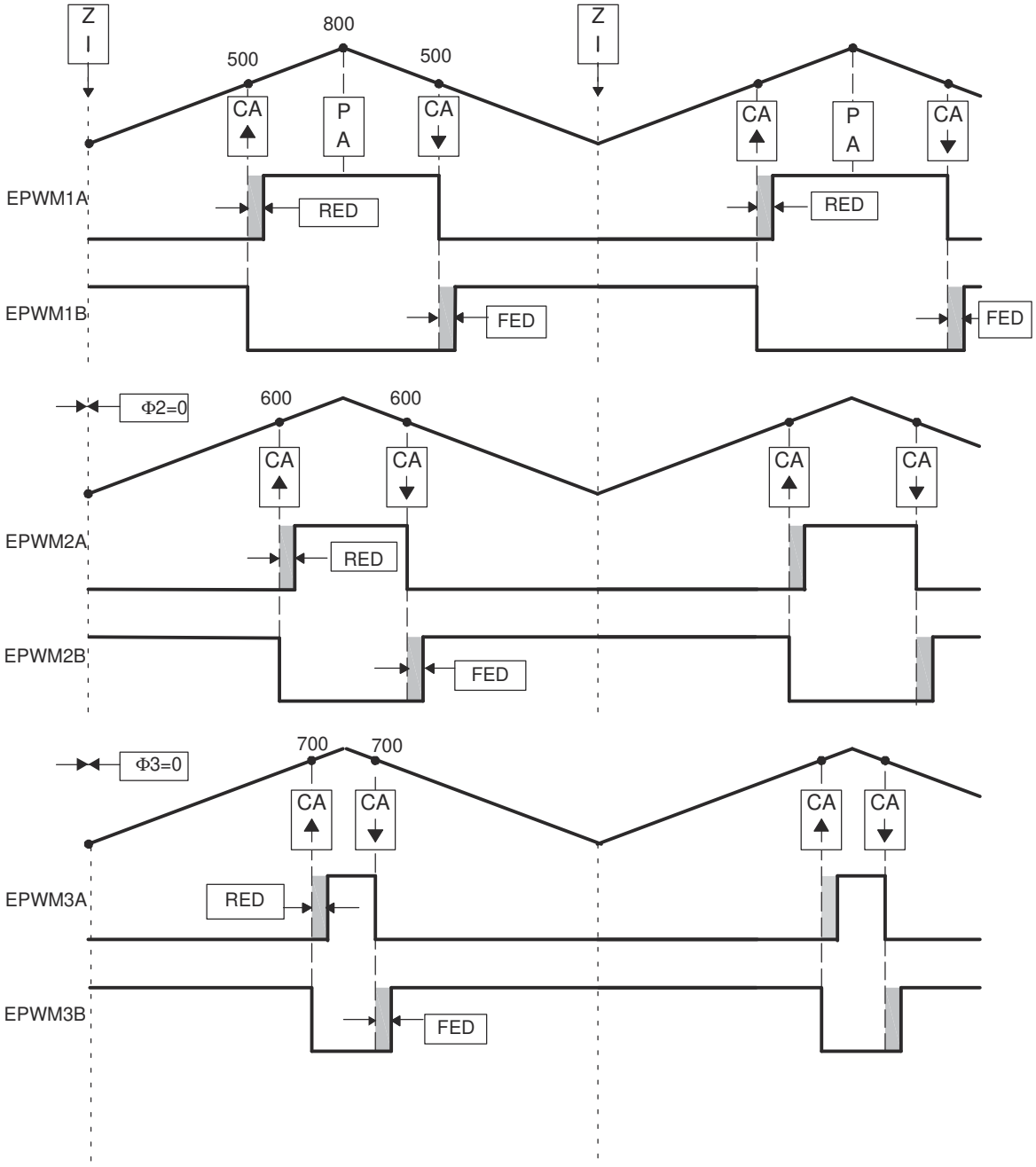

Figure 11-263. 3-Phase Inverter Waveforms for Figure 11-262 (Only One Inverter Shown)

Copyright © 2025 Texas Instruments Incorporated

11.4.2.3.7 Practical Applications Using Phase Control Between PWM Modules

So far, none of the examples have made use of the phase register (TBPHS). It has either been set to zero or its value has been a don't care. However, by programming appropriate values into TBPHS, multiple PWM modules can address another class of applications that rely on phase relationship between stages for correct operation. As described in the TB module section, a PWM module can be configured to allow a SyncIn pulse to cause the TBPHS register to be loaded into the TBCTR register. To illustrate this concept, Figure 11-264 shows a controller and target module with a phase relationship of 120°, that is, the target leads the controller.

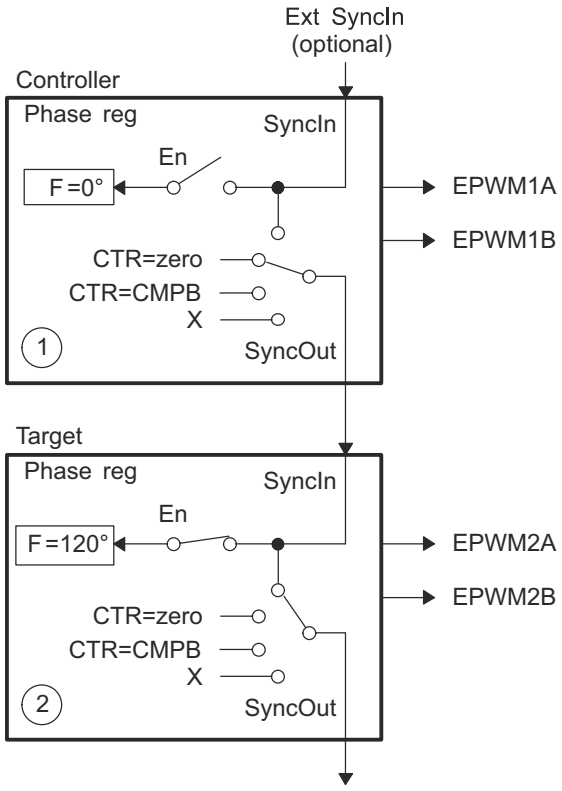

Figure 11-264. Configuring Two PWM Modules for Phase Control

Copyright © 2025 Texas Instruments Incorporated

Figure 11-265 shows the associated timing waveforms for this configuration. Here, TBPRD = 600 for both controller and target. For the target, TBPHS = 200 (that is, 200/600 X 360° = 120°). Whenever the controller generates a SyncIn pulse (CTR = PRD), the value of TBPHS = 200 is loaded into the target TBCTR register so the target time-base is always leading the controller's time-base by 120°.

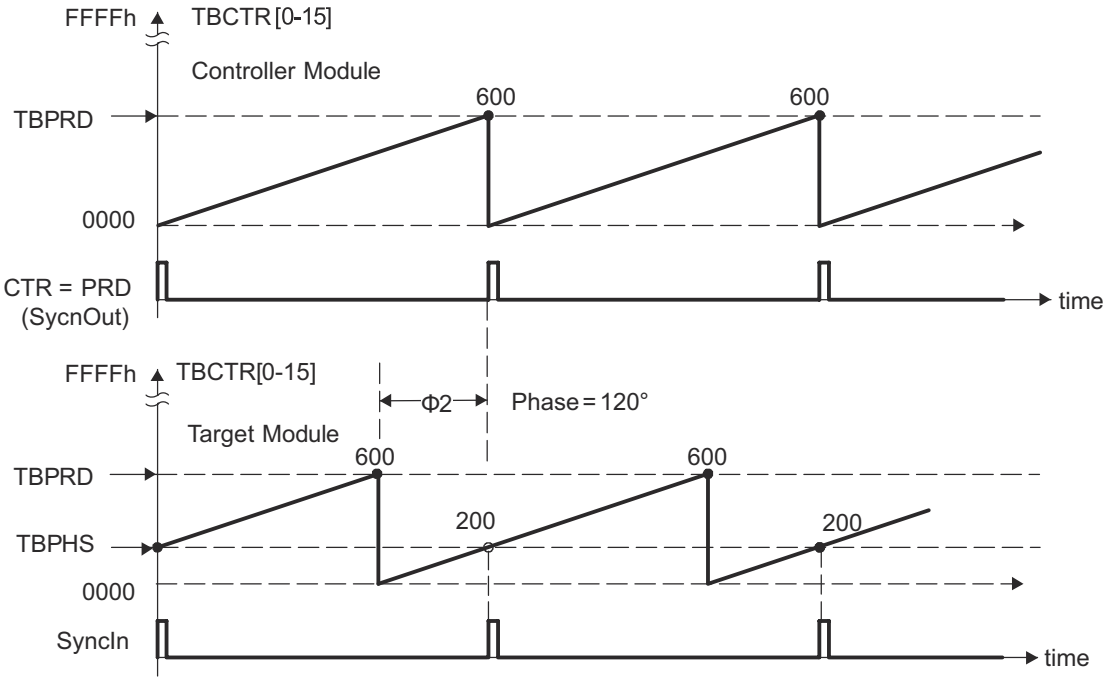

Figure 11-265. Timing Waveforms Associated With Phase Control Between 2 Modules

Copyright © 2025 Texas Instruments Incorporated

11.4.2.4 ePWM Module Control and Status Registers

Table 11-1179 lists the memory-mapped registers for the ePWM Module Control and Status Registers. All register offset addresses not listed in Table 11-1179 should be considered as reserved locations and the register contents should not be modified.

Table 11-1179. ePWM Module Control and Status Registers

Offset	Acronym	Register Name	Section
0h	TBSTS	Time-Base Status Register	Section 12.4.2.4.1
2h	TBCTL	Time-Base Control Register	Section 12.4.2.4.2
4h	TBPHS	Time-Base Phase Register	Section 12.4.2.4.3
8h	TBPRD	Time-Base Period Register	Section 12.4.2.4.4
Ah	TBCTR	Time-Base Counter Register	Section 12.4.2.4.5
Ch	CMPCTL	Counter-Compare Control Register	Section 12.4.2.4.6
10h	CMPA	Counter-Compare A Register	Section 12.4.2.4.7
14h	AQCTLA	Action-Qualifier Control Register for Output A (EPWMxA)	Section 12.4.2.4.8
16h	CMPB	Counter-Compare B Register	Section 12.4.2.4.9
18h	AQSFRC	Action-Qualifier Software Force Register	Section 12.4.2.4.10
1Ah	AQCTLB	Action-Qualifier Control Register for Output B (EPWMxB)	Section 12.4.2.4.11
1Ch	DBCTL	Dead-Band Generator Control Register	Section 12.4.2.4.12
1Eh	AQCSFRC	Action-Qualifier Continuous S/W Force Register Set	Section 12.4.2.4.13
20h	DBFED	Dead-Band Generator Falling Edge Delay Count Register	Section 12.4.2.4.14
22h	DBRED	Dead-Band Generator Rising Edge Delay Count Register	Section 12.4.2.4.15
24h	TZDCSEL	Trip Zone Digital Compare Event Select Register	Section 12.4.2.4.16
26h	TZSEL	Trip-Zone Select Register	Section 12.4.2.4.17
28h	TZEINT	Trip-Zone Enable Interrupt Register	Section 12.4.2.4.18
2Ah	TZCTL	Trip-Zone Control Register	Section 12.4.2.4.19
2Ch	TZCLR	Trip-Zone Clear Register	Section 12.4.2.4.20
2Eh	TZFLG	Trip-Zone Flag Register	Section 12.4.2.4.21
30h	ETSEL	Event-Trigger Selection Register	Section 12.4.2.4.22
32h	TZFRC	Trip-Zone Force Register	Section 12.4.2.4.23
34h	ETFLG	Event-Trigger Flag Register	Section 12.4.2.4.24
36h	ETPS	Event-Trigger Pre-Scale Register	Section 12.4.2.4.25
38h	ETFRC	Event-Trigger Force Register	Section 12.4.2.4.26
3Ah	ETCLR	Event-Trigger Clear Register	Section 12.4.2.4.27
3Eh	PCCTL	PWM-Chopper Control Register	Section 12.4.2.4.28
60h	DCACTL	Digital Compare A Control Register	Section 12.4.2.4.29
62h	DCTRIPSEL	Digital Compare Trip Select Register	Section 12.4.2.4.30
64h	DCFCTL	Digital Compare Filter Control Register	Section 12.4.2.4.31
66h	DCBCTL	Digital Compare B Control Register	Section 12.4.2.4.32
68h	DCFOFFSET	Digital Compare Filter Offset Register	Section 12.4.2.4.33
6Ah	DCCAPCTL	Digital Compare Capture Control Register	Section 12.4.2.4.34
6Ch	DCFWINDOW	Digital Compare Filter Window Register	Section 12.4.2.4.35
6Eh	DCFOFFSETCNT	Digital Compare Filter Offset Counter Register	Section 12.4.2.4.36
70h	DCCAP	Digital Compare Counter Capture Register	Section 12.4.2.4.37
72h	DCFWINDOWCNT	Digital Compare Filter Window Counter Register	Section 12.4.2.4.38

Copyright © 2025 Texas Instruments Incorporated

11.4.2.4.1 TBSTS Register (Offset = 0h) [reset = 1h]

TBSTS is shown in Figure 11-266 and described in Table 11-1180.

Figure 11-266. TBSTS Register

15	14	13	12	11	10	9	8
RESERVED							
R-0h							
7	6	5	4	3	2	1	0
RESERVED					CTRMAX	SYNCI	CTRDIR
R-0h					R-0h	R/W-0h	R-1h

LEGEND: R/W = Read/Write; R = Read only; W1toCl = Write 1 to clear bit; -*n* = value after reset

Table 11-1180. TBSTS Register Field Descriptions

Bit	Field	Type	Reset	Description
15-3	RESERVED	R	0h	Reserved
2	CTRMAX	R	0h	Time-Base Counter Max Latched Status Bit 0h = Reading a 0 indicates the time-base counter never reached its maximum value. Writing a 0 will have no effect. 1h = Reading a 1 on this bit indicates that the time-base counter reached the max value 0xFFFF. Writing a 1 to this bit will clear the latched event.
1	SYNCI	R/W	0h	Input Synchronization Latched Status Bit 0h = Writing a 0 will have no effect. Reading a 0 indicates no external synchronization event has occurred. 1h = Reading a 1 on this bit indicates that an external synchronization event has occurred (EPWMxSYNCI). Writing a 1 to this bit will clear the latched event.
0	CTRDIR	R	1h	Time-Base Counter Direction Status Bit. At reset, the counter is frozen, therefore, this bit has no meaning. To make this bit meaningful, you must first set the appropriate mode via TBCTL[CTRMODE]. 0h = Time-Base Counter is currently counting down. 1h = Time-Base Counter is currently counting up.

Copyright © 2025 Texas Instruments Incorporated

11.4.2.4.2 TBCTL Register (Offset = 2h) [reset = 83h]

TBCTL is shown in Figure 11-267 and described in Table 11-1181.

Figure 11-267. TBCTL Register

15	14	13	12	11	10	9	8
FREE_SOFT		PHSDIR	CLKDIV			HSPCLKDIV	
R/W-0h		R/W-0h	R/W-0h			R/W-1h	
7	**6**	**5**	**4**	**3**	**2**	**1**	**0**
HSPCLKDIV	SWFSYNC	SYNCOSEL		PRDLD	PHSEN	CTRMODE	
R/W-1h	R/W-0h	R/W-0h		R/W-0h	R/W-0h	R/W-3h	

LEGEND: R/W = Read/Write; R = Read only; W1toCl = Write 1 to clear bit; -*n* = value after reset

Table 11-1181. TBCTL Register Field Descriptions

Bit	Field	Type	Reset	Description
15-14	FREE_SOFT	R/W	0h	Emulation Mode Bits. These bits select the behavior of the ePWM time-base counter during emulation events: 0h = Stop after the next time-base counter increment or decrement. 1h = Stop when counter completes a whole cycle. In up-count mode, stop when the time-base counter = period (TBCTR = TBPRD). In down-count mode, stop when the time-base counter = 0x0000 (TBCTR = 0x0000). In up-down-count mode, stop when the time-base counter = 0x0000 (TBCTR = 0x0000). 2h = Free run 3h = Free run
13	PHSDIR	R/W	0h	Phase Direction Bit. This bit is only used when the time-base counter is configured in the up-down-count mode. The PHSDIR bit indicates the direction the time-base counter (TBCTR) will count after a synchronization event occurs and a new phase value is loaded from the phase (TBPHS) register. This is irrespective of the direction of the counter before the synchronization event. In the up-count and down-count modes this bit is ignored. 0h = Count down after the synchronization event. 1h = Count up after the synchronization event.
12-10	CLKDIV	R/W	0h	Time-base Clock Prescale Bits. These bits determine part of the time-base clock prescale value. TBCLK = VCLK4 / (HSPCLKDIV x CLKDIV) 0h = /1 (default on reset) 1h = /2 2h = /4 3h = /8 4h = /16 5h = /32 6h = /64 7h = /128

Copyright © 2025 Texas Instruments Incorporated

Table 11-1181. TBCTL Register Field Descriptions (continued)

Bit	Field	Type	Reset	Description
9-7	HSPCLKDIV	R/W	1h	High Speed Time-base Clock Prescale Bits. These bits determine part of the time-base clock prescale value. TBCLK = VCLK4 / (HSPCLKDIV x CLKDIV) 0h = /1 1h = /2 (default on reset) 2h = /4 3h = /6 4h = /8 5h = /10 6h = /12 7h = /14
6	SWFSYNC	R/W	0h	Software Forced Synchronization Pulse. This event is ORed with the EPWMxSYNCI input of the ePWM module. SWFSYNC is valid (operates) only when EPWMxSYNCI is selected by SYNCOSEL = 0. 0h = Writing a 0 has no effect and reads always return a 0. 1h = Writing a 1 forces a one-time synchronization pulse to be generated.
5-4	SYNCOSEL	R/W	0h	Synchronization Output Select. These bits select the source of the EPWMxSYNCO signal. 0h = EPWMxSYNC 1h = CTR = zero: Time-base counter equal to zero (TBCTR = 0x0000) 2h = CTR = CMPB : Time-base counter equal to counter-compare B (TBCTR = CMPB) 3h = Disable EPWMxSYNCO signal
3	PRDLD	R/W	0h	Active Period Register Load From Shadow Register Select 0h = The period register (TBPRD) is loaded from its shadow register when the time-base counter, TBCTR, is equal to 0. A write or read to the TBPRD register accesses the shadow register. 1h = Load the TBPRD register immediately without using a shadow register. A write or read to the TBPRD register directly accesses the active register.
2	PHSEN	R/W	0h	Counter Register Load From Phase Register Enable 0h = Do not load the time-base counter (TBCTR) from the time-base phase register (TBPHS) 1h = Load the time-base counter with the phase register when an EPWMxSYNCI input signal occurs or when a software synchronization is forced by the SWFSYNC bit, or when a digital compare sync event occurs.
1-0	CTRMODE	R/W	3h	Counter Mode. The time-base counter mode is normally configured once and not changed during normal operation. If you change the mode of the counter, the change will take effect at the next TBCLK edge and the current counter value shall increment or decrement from the value before the mode change. These bits set the time-base counter mode of operation as follows: 0h = Up-count mode 1h = Down-count mode 2h = Up-down-count mode 3h = Stop-freeze counter operation (default on reset)

Copyright © 2025 Texas Instruments Incorporated

11.4.2.4.3 TBPHS Register (Offset = 4h) [reset = 0h]

TBPHS is shown in Figure 11-268 and described in Table 11-1182.

Figure 11-268. TBPHS Register

15	14	13	12	11	10	9	8	7	6	5	4	3	2	1	0
TBPHS															
R/W-0h															

LEGEND: R/W = Read/Write; R = Read only; W1toCl = Write 1 to clear bit; -*n* = value after reset

Table 11-1182. TBPHS Register Field Descriptions

Bit	Field	Type	Reset	Description
15-0	TBPHS	R/W	0h	These bits set time-base counter phase of the selected ePWM relative to the time-base that is supplying the synchronization input signal. Valid values: 0-FFFFh If TBCTL[PHSEN] = 0, then the synchronization event is ignored and the time-base counter is not loaded with the phase. If TBCTL[PHSEN] = 1, then the time-base counter (TBCTR) will be loaded with the phase (TBPHS) when a synchronization event occurs. The synchronization event can be initiated by the input synchronization signal (EPWMxSYNCI) or by a software forced synchronization.

Copyright © 2025 Texas Instruments Incorporated

11.4.2.4.4 TBPRD Register (Offset = 8h) [reset = 0h]

TBPRD is shown in Figure 11-269 and described in Table 11-1183.

Figure 11-269. TBPRD Register

15	14	13	12	11	10	9	8	7	6	5	4	3	2	1	0
TBPRD															
R/W-0h															

LEGEND: R/W = Read/Write; R = Read only; W1toCl = Write 1 to clear bit; *-n* = value after reset

Table 11-1183. TBPRD Register Field Descriptions

Bit	Field	Type	Reset	Description
15-0	TBPRD	R/W	0h	These bits determine the period of the time-base counter. This sets the PWM frequency. Valid values: 0-FFFFh Shadowing of this register is enabled and disabled by the TBCTL[PRDLD] bit. By default this register is shadowed. If TBCTL[PRDLD] = 0, then the shadow is enabled and any write or read will automatically go to the shadow register. In this case, the active register will be loaded from the shadow register when the time-base counter equals 0. If TBCTL[PRDLD] = 1, then the shadow is disabled and any write or read will go directly to the active register, that is the register actively controlling the hardware. The active and shadow registers share the same memory map address.

Copyright © 2025 Texas Instruments Incorporated

11.4.2.4.5 TBCTR Register (Offset = Ah) [reset = 0h]

TBCTR is shown in Figure 11-270 and described in Table 11-1184.

Figure 11-270. TBCTR Register

15	14	13	12	11	10	9	8	7	6	5	4	3	2	1	0
TBCTR															
R/W-0h															

LEGEND: R/W = Read/Write; R = Read only; W1toCl = Write 1 to clear bit; -*n* = value after reset

Table 11-1184. TBCTR Register Field Descriptions

Bit	Field	Type	Reset	Description
15-0	TBCTR	R/W	0h	Reading these bits gives the current time-base counter value. Valid values: 0-FFFFh Writing to these bits sets the current time-base counter value. The update happens as soon as the write occurs. The write is NOT synchronized to the time-base clock (TBCLK) and the register is not shadowed.

Copyright © 2025 Texas Instruments Incorporated

11.4.2.4.6 CMPCTL Register (Offset = Ch) [reset = 0h]

CMPCTL is shown in Figure 11-271 and described in Table 11-1185.

Figure 11-271. CMPCTL Register

15	14	13	12	11	10	9	8
RESERVED						SHDWBFULL	SHDWAFULL
R-0h						R-0h	R-0h
7	6	5	4	3	2	1	0
RESERVED	SHDWBMODE	RESERVED	SHDWAMODE	LOADBMODE		LOADAMODE	
R-0h	R/W-0h	R-0h	R/W-0h	R/W-0h		R/W-0h	

LEGEND: R/W = Read/Write; R = Read only; W1toCl = Write 1 to clear bit; -*n* = value after reset

Table 11-1185. CMPCTL Register Field Descriptions

Bit	Field	Type	Reset	Description
15-10	RESERVED	R	0h	Reserved
9	SHDWBFULL	R	0h	Counter-compare B (CMPB) Shadow Register Full Status Flag. This bit self clears once a load-strobe occurs. 0h = CMPB shadow FIFO not full yet 1h = Indicates the CMPB shadow FIFO is full a CPU write will overwrite current shadow value.
8	SHDWAFULL	R	0h	Counter-compare A (CMPA) Shadow Register Full Status Flag. The flag bit is set when a 32-bit write to CMPA:CMPAHR register or a 16-bit write to CMPA register is made. A 16-bit write to CMPAHR register will not affect the flag. This bit self clears once a load-strobe occurs. 0h = CMPA shadow FIFO not full yet 1h = Indicates the CMPA shadow FIFO is full, a CPU write will overwrite the current shadow value.
7	RESERVED	R	0h	Reserved
6	SHDWBMODE	R/W	0h	Counter-compare B (CMPB) Register Operating Mode. 0h = Shadow mode. Operates as a double buffer. All writes via the CPU access the shadow register. 1h = Immediate mode. Only the active compare B register is used. All writes and reads directly access the active register for immediate compare action.
5	RESERVED	R	0h	Reserved
4	SHDWAMODE	R/W	0h	Counter-compare A (CMPA) Register Operating Mode. 0h = Shadow mode. Operates as a double buffer. All writes via the CPU access the shadow register. 1h = Immediate mode. Only the active compare register is used. All writes and reads directly access the active register for immediate compare action.

Copyright © 2025 Texas Instruments Incorporated

Table 11-1185. CMPCTL Register Field Descriptions (continued)

Bit	Field	Type	Reset	Description
3-2	LOADBMODE	R/W	0h	Active Counter-Compare B (CMPB) Load From Shadow Select Mode. This bit has no effect in immediate mode (CMPCTL[SHDWBMODE] = 1). 0h = Load on CTR = Zero: Time-base counter equal to zero (TBCTR = 0x0000) 1h = Load on CTR = PRD: Time-base counter equal to period (TBCTR = TBPRD) 2h = Load on either CTR = Zero or CTR = PRD 3h = Freeze (no loads possible)
1-0	LOADAMODE	R/W	0h	Active Counter-Compare A (CMPA) Load From Shadow Select Mode. This bit has no effect in immediate mode (CMPCTL[SHDWAMODE] = 1). 0h = Load on CTR = Zero: Time-base counter equal to zero (TBCTR = 0x0000) 1h = Load on CTR = PRD: Time-base counter equal to period (TBCTR = TBPRD) 2h = Load on either CTR = Zero or CTR = PRD 3h = Freeze (no loads possible)

Copyright © 2025 Texas Instruments Incorporated

11.4.2.4.7 CMPA Register (Offset = 10h) [reset = 0h]

CMPA is shown in Figure 11-272 and described in Table 11-1186.

Figure 11-272. CMPA Register

15	14	13	12	11	10	9	8	7	6	5	4	3	2	1	0
CMPA															
R/W-0h															

LEGEND: R/W = Read/Write; R = Read only; W1toCl = Write 1 to clear bit; -*n* = value after reset

Table 11-1186. CMPA Register Field Descriptions

Bit	Field	Type	Reset	Description
15-0	CMPA	R/W	0h	The value in the active CMPA register is continuously compared to the time-base counter (TBCTR). When the values are equal, the counter-compare module generates a "time-base counter equal to counter compare A" event. This event is sent to the action-qualifier where it is qualified and converted it into one or more actions. These actions can be applied to either the EPWMxA or the EPWMxB output depending on the configuration of the AQCTLA and AQCTLB registers. The actions that can be defined in the AQCTLA and AQCTLB registers include: Do nothing, the event is ignored. Clear: Pull the EPWMxA and/or EPWMxB signal low Set: Pull the EPWMxA and/or EPWMxB signal high Toggle the EPWMxA and/or EPWMxB signal Shadowing of this register is enabled and disabled by the CMPCTL[SHDWAMODE] bit. By default this register is shadowed. If CMPCTL[SHDWAMODE] = 0, then the shadow is enabled and any write or read will automatically go to the shadow register. In this case, the CMPCTL[LOADAMODE] bit field determines which event will load the active register from the shadow register. Before a write, the CMPCTL[SHDWAFULL] bit can be read to determine if the shadow register is currently full. If CMPCTL[SHDWAMODE] = 1, then the shadow register is disabled and any write or read will go directly to the active register, that is the register actively controlling the hardware. In either mode, the active and shadow registers share the same memory map address.

Copyright © 2025 Texas Instruments Incorporated

11.4.2.4.8 AQCTLA Register (Offset = 14h) [reset = 0h]

AQCTLA is shown in Figure 11-273 and described in Table 11-1187.

Figure 11-273. AQCTLA Register

15	14	13	12	11	10	9	8
RESERVED				CBD		CBU	
R-0h				R/W-0h		R/W-0h	
7	6	5	4	3	2	1	0
CAD		CAU		PRD		ZRO	
R/W-0h		R/W-0h		R/W-0h		R/W-0h	

LEGEND: R/W = Read/Write; R = Read only; W1toCl = Write 1 to clear bit; -*n* = value after reset

Table 11-1187. AQCTLA Register Field Descriptions

Bit	Field	Type	Reset	Description
15-12	RESERVED	R	0h	Reserved
11-10	CBD	R/W	0h	Action when the time-base counter equals the active CMPB register and the counter is decrementing. 0h = Do nothing (action disabled). 1h = Clear: force EPWMxA output low. 2h = Set: force EPWMxA output high. 3h = Toggle EPWMxA output: low output signal will be forced high, and a high signal will be forced low.
9-8	CBU	R/W	0h	Action when the counter equals the active CMPB register and the counter is incrementing. 0h = Do nothing (action disabled). 1h = Clear: force EPWMxA output low. 2h = Set: force EPWMxA output high. 3h = Toggle EPWMxA output: low output signal will be forced high, and a high signal will be forced low.
7-6	CAD	R/W	0h	Action when the counter equals the active CMPA register and the counter is decrementing. 0h = Do nothing (action disabled). 1h = Clear: force EPWMxA output low. 2h = Set: force EPWMxA output high. 3h = Toggle EPWMxA output: low output signal will be forced high, and a high signal will be forced low.
5-4	CAU	R/W	0h	Action when the counter equals the active CMPA register and the counter is incrementing. 0h = Do nothing (action disabled). 1h = Clear: force EPWMxA output low. 2h = Set: force EPWMxA output high. 3h = Toggle EPWMxA output: low output signal will be forced high, and a high signal will be forced low.

Copyright © 2025 Texas Instruments Incorporated

Table 11-1187. AQCTLA Register Field Descriptions (continued)

Bit	Field	Type	Reset	Description
3-2	PRD	R/W	0h	Action when the counter equals the period. Note: By definition, in count up-down mode when the counter equals period the direction is defined as 0 or counting down. 0h = Do nothing (action disabled). 1h = Clear: force EPWMxA output low. 2h = Set: force EPWMxA output high. 3h = Toggle EPWMxA output: low output signal will be forced high, and a high signal will be forced low.
1-0	ZRO	R/W	0h	Action when counter equals zero. Note: By definition, in count up-down mode when the counter equals 0 the direction is defined as 1 or counting up. 0h = Do nothing (action disabled). 1h = Clear: force EPWMxA output low. 2h = Set: force EPWMxA output high. 3h = Toggle EPWMxA output: low output signal will be forced high, and a high signal will be forced low.

Copyright © 2025 Texas Instruments Incorporated

11.4.2.4.9 CMPB Register (Offset = 16h) [reset = 0h]

CMPB is shown in Figure 11-274 and described in Table 11-1188.

Figure 11-274. CMPB Register

15	14	13	12	11	10	9	8	7	6	5	4	3	2	1	0
CMPB															
R/W-0h															

LEGEND: R/W = Read/Write; R = Read only; W1toCl = Write 1 to clear bit; *-n* = value after reset

Table 11-1188. CMPB Register Field Descriptions

Bit	Field	Type	Reset	Description
15-0	CMPB	R/W	0h	The value in the active CMPB register is continuously compared to the time-base counter (TBCTR). When the values are equal, the counter-compare module generates a "time-base counter equal to counter compare B" event. This event is sent to the action-qualifier where it is qualified and converted it into one or more actions. These actions can be applied to either the EPWMxA or the EPWMxB output depending on the configuration of the AQCTLA and AQCTLB registers. The actions that can be defined in the AQCTLA and AQCTLB registers include: Do nothing, event is ignored. Clear: Pull the EPWMxA and/or EPWMxB signal low Set: Pull the EPWMxA and/or EPWMxB signal high Toggle the EPWMxA and/or EPWMxB signal Shadowing of this register is enabled and disabled by the CMPCTL[SHDWBMODE] bit. By default this register is shadowed. If CMPCTL[SHDWBMODE] = 0, then the shadow is enabled and any write or read will automatically go to the shadow register. In this case, the CMPCTL[LOADBMODE] bit field determines which event will load the active register from the shadow register. Before a write, the CMPCTL[SHDWBFULL] bit can be read to determine if the shadow register is currently full. If CMPCTL[SHDWBMODE] = 1, then the shadow register is disabled and any write or read will go directly to the active register, that is the register actively controlling the hardware. In either mode, the active and shadow registers share the same memory map address.

Copyright © 2025 Texas Instruments Incorporated

11.4.2.4.10 AQSFRC Register (Offset = 18h) [reset = 0h]

AQSFRC is shown in Figure 11-275 and described in Table 11-1189.

Figure 11-275. AQSFRC Register

15	14	13	12	11	10	9	8
RESERVED							
R-0h							
7	6	5	4	3	2	1	0
RLDCSF		OTSFB	ACTSFB		OTSFA	ACTSFA	
R/W-0h		R/W-0h	R/W-0h		R/W-0h	R/W-0h	

LEGEND: R/W = Read/Write; R = Read only; W1toCl = Write 1 to clear bit; -*n* = value after reset

Table 11-1189. AQSFRC Register Field Descriptions

Bit	Field	Type	Reset	Description
15-8	RESERVED	R	0h	Reserved
7-6	RLDCSF	R/W	0h	AQCSFRC Active Register Reload From Shadow Options 0h = Load on event counter equals zero 1h = Load on event counter equals period 2h = Load on event counter equals zero or counter equals period 3h = Load immediately (the active register is directly accessed by the CPU and is not loaded from the shadow register).
5	OTSFB	R/W	0h	One-Time Software Forced Event on Output B 0h = Writing a 0 has no effect. Always reads back a 0. This bit is auto cleared once a write to this register is complete, that is, a forced event is initiated.) This is a one-shot forced event. It can be overridden by another subsequent event on output B. 1h = Initiates a single s/w forced event
4-3	ACTSFB	R/W	0h	Action when One-Time Software Force B Is invoked. 0h = Does nothing (action disabled) 1h = Clear (low) 2h = Set (high) 3h = Toggle (Low to High, High to Low). Note: This action is not qualified by counter direction (CNT_dir).
2	OTSFA	R/W	0h	One-Time Software Forced Event on Output A 0h = Writing a 0 has no effect. Always reads back a 0. This bit is auto cleared once a write to this register is complete (that is, a forced event is initiated). 1h = Initiates a single software forced event
1-0	ACTSFA	R/W	0h	Action When One-Time Software Force A Is Invoked. 0h = Does nothing (action disabled) 1h = Clear (low) 2h = Set (high) 3h = Toggle (Low to High, High to Low). Note: This action is not qualified by counter direction (CNT_dir).

Copyright © 2025 Texas Instruments Incorporated

11.4.2.4.11 AQCTLB Register (Offset = 1Ah) [reset = 0h]

AQCTLB is shown in Figure 11-276 and described in Table 11-1190.

Figure 11-276. AQCTLB Register

15	14	13	12	11	10	9	8
RESERVED				CBD		CBU	
R-0h				R/W-0h		R/W-0h	
7	6	5	4	3	2	1	0
CAD		CAU		PRD		ZRO	
R/W-0h		R/W-0h		R/W-0h		R/W-0h	

LEGEND: R/W = Read/Write; R = Read only; W1toCl = Write 1 to clear bit; -*n* = value after reset

Table 11-1190. AQCTLB Register Field Descriptions

Bit	Field	Type	Reset	Description
15-12	RESERVED	R	0h	Reserved
11-10	CBD	R/W	0h	Action when the counter equals the active CMPB register and the counter is decrementing. 0h = Do nothing (action disabled). 1h = Clear: force EPWMxB output low. 2h = Set: force EPWMxB output high. 3h = Toggle EPWMxB output: low output signal will be forced high, and a high signal will be forced low.
9-8	CBU	R/W	0h	Action when the counter equals the active CMPB register and the counter is incrementing. 0h = Do nothing (action disabled). 1h = Clear: force EPWMxB output low. 2h = Set: force EPWMxB output high. 3h = Toggle EPWMxB output: low output signal will be forced high, and a high signal will be forced low.
7-6	CAD	R/W	0h	Action when the counter equals the active CMPA register and the counter is decrementing. 0h = Do nothing (action disabled). 1h = Clear: force EPWMxB output low. 2h = Set: force EPWMxB output high. 3h = Toggle EPWMxB output: low output signal will be forced high, and a high signal will be forced low.
5-4	CAU	R/W	0h	Action when the counter equals the active CMPA register and the counter is incrementing. 0h = Do nothing (action disabled). 1h = Clear: force EPWMxB output low. 2h = Set: force EPWMxB output high. 3h = Toggle EPWMxB output: low output signal will be forced high, and a high signal will be forced low.

Copyright © 2025 Texas Instruments Incorporated

Table 11-1190. AQCTLB Register Field Descriptions (continued)

Bit	Field	Type	Reset	Description
3-2	PRD	R/W	0h	Action when the counter equals the period. Note: By definition, in count up-down mode when the counter equals period the direction is defined as 0 or counting down. 0h = Do nothing (action disabled). 1h = Clear: force EPWMxB output low. 2h = Set: force EPWMxB output high. 3h = Toggle EPWMxB output: low output signal will be forced high, and a high signal will be forced low.
1-0	ZRO	R/W	0h	Action when counter equals zero. Note: By definition, in count up-down mode when the counter equals 0 the direction is defined as 1 or counting up. 0h = Do nothing (action disabled). 1h = Clear: force EPWMxB output low. 2h = Set: force EPWMxB output high. 3h = Toggle EPWMxB output: low output signal will be forced high, and a high signal will be forced low.

Copyright © 2025 Texas Instruments Incorporated

11.4.2.4.12 DBCTL Register (Offset = 1Ch) [reset = 0h]

DBCTL is shown in Figure 11-277 and described in Table 11-1191.

Figure 11-277. DBCTL Register

15	14	13	12	11	10	9	8
HALFCYCLE	RESERVED						
R/W-0h	R-0h						
7	6	5	4	3	2	1	0
RESERVED		IN_MODE		POLSEL		OUT_MODE	
R-0h		R/W-0h		R/W-0h		R/W-0h	

LEGEND: R/W = Read/Write; R = Read only; W1toCl = Write 1 to clear bit; -*n* = value after reset

Table 11-1191. DBCTL Register Field Descriptions

Bit	Field	Type	Reset	Description
15	HALFCYCLE	R/W	0h	Half Cycle Clocking Enable Bit: 0h = Full cycle clocking enabled. The dead-band counters are clocked at the TBCLK rate. 1h = Half cycle clocking enabled. The dead-band counters are clocked at TBCLK x 2.
14-6	RESERVED	R	0h	Reserved
5-4	IN_MODE	R/W	0h	Dead Band Input Mode Control. Bit 5 controls the S5 switch and bit 4 controls the S4 switch shown in . This allows you to select the input source to the falling-edge and rising-edge delay. To produce classical dead-band waveforms the default is EPWMxA In is the source for both falling and rising-edge delays. 0h = EPWMxA In (from the action-qualifier) is the source for both falling-edge and rising-edge delay. 1h = EPWMxB In (from the action-qualifier) is the source for rising-edge delayed signal. EPWMxA In (from the action-qualifier) is the source for falling-edge delayed signal. 2h = EPWMxA In (from the action-qualifier) is the source for rising-edge delayed signal. EPWMxB In (from the action-qualifier) is the source for falling-edge delayed signal. 3h = EPWMxB In (from the action-qualifier) is the source for both rising-edge delay and falling-edge delayed signal.

Copyright © 2025 Texas Instruments Incorporated

Table 11-1191. DBCTL Register Field Descriptions (continued)

Bit	Field	Type	Reset	Description
3-2	POLSEL	R/W	0h	Polarity Select Control. Bit 3 controls the S3 switch and bit 2 controls the S2 switch shown in . This allows you to selectively invert one of the delayed signals before it is sent out of the dead-band submodule. The following descriptions correspond to classical upper/lower switch control as found in one leg of a digital motor control inverter. These assume that DBCTL[OUT_MODE] = 1,1 and DBCTL[IN_MODE] = 0,0. Other enhanced modes are also possible, but not regarded as typical usage modes. 0h = Active high (AH) mode. Neither EPWMxA nor EPWMxB is inverted (default). 1h = Active low complementary (ALC) mode. EPWMxA is inverted. 2h = Active high complementary (AHC). EPWMxB is inverted. 3h = Active low (AL) mode. Both EPWMxA and EPWMxB are inverted.
1-0	OUT_MODE	R/W	0h	Dead-band Output Mode Control. Bit 1 controls the S1 switch and bit 0 controls the S0 switch shown in . This allows you to selectively enable or bypass the dead-band generation for the falling-edge and rising-edge delay. 0h = Dead-band generation is bypassed for both output signals. In this mode, both the EPWMxA and EPWMxB output signals from the action-qualifier are passed directly to the PWM-chopper submodule. In this mode, the POLSEL and IN_MODE bits have no effect. 1h = Disable rising-edge delay. The EPWMxA signal from the action-qualifier is passed straight through to the EPWMxA input of the PWM-chopper submodule. The falling-edge delayed signal is seen on output EPWMxB. The input signal for the delay is determined by DBCTL[IN_MODE]. 2h = The rising-edge delayed signal is seen on output EPWMxA. The input signal for the delay is determined by DBCTL[IN_MODE]. Disable falling-edge delay. The EPWMxB signal from the action-qualifier is passed straight through to the EPWMxB input of the PWM-chopper submodule. 3h = Dead-band is fully enabled for both rising-edge delay on output EPWMxA and falling-edge delay on output EPWMxB. The input signal for the delay is determined by DBCTL[IN_MODE].

Copyright © 2025 Texas Instruments Incorporated

11.4.2.4.13 AQCSFRC Register (Offset = 1Eh) [reset = 0h]

AQCSFRC is shown in Figure 11-278 and described in Table 11-1192.

Figure 11-278. AQCSFRC Register

15	14	13	12	11	10	9	8
RESERVED							
R-0h							
7	6	5	4	3	2	1	0
RESERVED				CSFB		CSFA	
R-0h				R/W-0h		R/W-0h	

LEGEND: R/W = Read/Write; R = Read only; W1toCl = Write 1 to clear bit; -*n* = value after reset

Table 11-1192. AQCSFRC Register Field Descriptions

Bit	Field	Type	Reset	Description
15-4	RESERVED	R	0h	Reserved
3-2	CSFB	R/W	0h	Continuous Software Force on Output B. In immediate mode, a continuous force takes effect on the next TBCLK edge. In shadow mode, a continuous force takes effect on the next TBCLK edge after a shadow load into the active register. To configure shadow mode, use AQSFRC[RLDCSF]. 0h = Forcing disabled, that is, has no effect 1h = Forces a continuous low on output B 2h = Forces a continuous high on output B 3h = Software forcing is disabled and has no effect
1-0	CSFA	R/W	0h	Continuous Software Force on Output A. In immediate mode, a continuous force takes effect on the next TBCLK edge. In shadow mode, a continuous force takes effect on the next TBCLK edge after a shadow load into the active register. 0h = Forcing disabled, that is, has no effect 1h = Forces a continuous low on output A 2h = Forces a continuous high on output A 3h = Software forcing is disabled and has no effect

Copyright © 2025 Texas Instruments Incorporated

11.4.2.4.14 DBFED Register (Offset = 20h) [reset = 0h]

DBFED is shown in Figure 11-279 and described in Table 11-1193.

Figure 11-279. DBFED Register

15	14	13	12	11	10	9	8
RESERVED						DEL	
R-0h						R/W-0h	
7	6	5	4	3	2	1	0
DEL							
R/W-0h							

LEGEND: R/W = Read/Write; R = Read only; W1toCl = Write 1 to clear bit; -*n* = value after reset

Table 11-1193. DBFED Register Field Descriptions

Bit	Field	Type	Reset	Description
15-10	RESERVED	R	0h	Reserved
9-0	DEL	R/W	0h	Falling Edge Delay Count. 10-bit counter.

Copyright © 2025 Texas Instruments Incorporated

11.4.2.4.15 DBRED Register (Offset = 22h) [reset = 0h]

DBRED is shown in Figure 11-280 and described in Table 11-1194.

Figure 11-280. DBRED Register

15	14	13	12	11	10	9	8
RESERVED						DEL	
R-0h						R/W-0h	
7	6	5	4	3	2	1	0
DEL							
R/W-0h							

LEGEND: R/W = Read/Write; R = Read only; W1toCl = Write 1 to clear bit; -*n* = value after reset

Table 11-1194. DBRED Register Field Descriptions

Bit	Field	Type	Reset	Description
15-10	RESERVED	R	0h	Reserved
9-0	DEL	R/W	0h	Rising Edge Delay Count. 10-bit counter.

Copyright © 2025 Texas Instruments Incorporated

11.4.2.4.16 TZDCSEL Register (Offset = 24h) [reset = 0h]

TZDCSEL is shown in Figure 11-281 and described in Table 11-1195.

Figure 11-281. TZDCSEL Register

15	14	13	12	11	10	9	8
RESERVED				DCBEVT2			DCBEVT1
R-0h				R/W-0h			R/W-0h
7	6	5	4	3	2	1	0
DCBEVT1		DCAEVT2			DCAEVT1		
R/W-0h		R/W-0h			R/W-0h		

LEGEND: R/W = Read/Write; R = Read only; W1toCl = Write 1 to clear bit; -*n* = value after reset

Table 11-1195. TZDCSEL Register Field Descriptions

Bit	Field	Type	Reset	Description
15-12	RESERVED	R	0h	Reserved
11-9	DCBEVT2	R/W	0h	Digital Compare Output B Event 2 Selection 0h = Event disabled 1h = DCBH = low, DCBL = don't care 2h = DCBH = high, DCBL = don't care 3h = DCBL = low, DCBH = don't care 4h = DCBL = high, DCBH = don't care 5h = DCBL = high, DCBH = low 6h = Reserved 7h = Reserved
8-6	DCBEVT1	R/W	0h	Digital Compare Output B Event 1 Selection 0h = Event disabled 1h = DCBH = low, DCBL = don't care 2h = DCBH = high, DCBL = don't care 3h = DCBL = low, DCBH = don't care 4h = DCBL = high, DCBH = don't care 5h = DCBL = high, DCBH = low 6h = Reserved 7h = Reserved
5-3	DCAEVT2	R/W	0h	Digital Compare Output A Event 2 Selection 0h = Event disabled 1h = DCAH = low, DCAL = don't care 2h = DCAH = high, DCAL = don't care 3h = DCAL = low, DCAH = don't care 4h = DCAL = high, DCAH = don't care 5h = DCAL = high, DCAH = low 6h = Reserved 7h = Reserved

Copyright © 2025 Texas Instruments Incorporated

Table 11-1195. TZDCSEL Register Field Descriptions (continued)

Bit	Field	Type	Reset	Description
2-0	DCAEVT1	R/W	0h	Digital Compare Output A Event 1 Selection 0h = Event disabled 1h = DCAH = low, DCAL = don't care 2h = DCAH = high, DCAL = don't care 3h = DCAL = low, DCAH = don't care 4h = DCAL = high, DCAH = don't care 5h = DCAL = high, DCAH = low 6h = Reserved 7h = Reserved

Copyright © 2025 Texas Instruments Incorporated

11.4.2.4.17 TZSEL Register (Offset = 26h) [reset = 0h]

TZSEL is shown in Figure 11-282 and described in Table 11-1196.

One-Shot (OSHT) Trip-zone enable/disable (bits 15-8). When any of the enabled pins go low, a one-shot trip event occurs for this ePWM module. When the event occurs, the action defined in the TZCTL register is taken on the EPWMxA and EPWMxB outputs. The one-shot trip condition remains latched until the user clears the condition via the TZCLR register. Cycle-by-Cycle (CBC) Trip-zone enable/disable (bits 7-0). When any of the enabled pins go low, a cycle-by-cycle trip event occurs for this ePWM module. When the event occurs, the action defined in the TZCTL register is taken on the EPWMxA and EPWMxB outputs. A cycle-by-cycle trip condition is automatically cleared when the time-base counter reaches zero.

Figure 11-282. TZSEL Register

15	14	13	12	11	10	9	8
DCBEVT1	DCAEVT1	OSHT6	OSHT5	OSHT4	OSHT3	OSHT2	OSHT1
R-0h	R-0h	R/W-0h	R/W-0h	R/W-0h	R/W-0h	R/W-0h	R/W-0h
7	6	5	4	3	2	1	0
DCBEVT2	DCAEVT2	CBC6	CBC5	CBC4	CBC3	CBC2	CBC1
R-0h	R-0h	R/W-0h	R/W-0h	R/W-0h	R/W-0h	R/W-0h	R/W-0h

LEGEND: R/W = Read/Write; R = Read only; W1toCl = Write 1 to clear bit; -*n* = value after reset

Table 11-1196. TZSEL Register Field Descriptions

Bit	Field	Type	Reset	Description
15	DCBEVT1	R	0h	Digital Compare Output B Event 1 Select 0h = Disable DCBEVT1 as one-shot-trip source for this ePWM module 1h = Enable DCBEVT1 as one-shot-trip source for this ePWM module
14	DCAEVT1	R	0h	Digital Compare Output A Event 1 Select 0h = Disable DCAEVT1 as one-shot-trip source for this ePWM module 1h = Enable DCAEVT1 as one-shot-trip source for this ePWM module
13	OSHT6	R/W	0h	Trip-zone 6 (/TZ6) Select 0h = Disable /TZ6 as a one-shot trip source for this ePWM module 1h = Enable /TZ6 as a one-shot trip source for this ePWM module
12	OSHT5	R/W	0h	Trip-zone 5 (/TZ5) Select 0h = Disable /TZ5 as a one-shot trip source for this ePWM module 1h = Enable /TZ5 as a one-shot trip source for this ePWM module
11	OSHT4	R/W	0h	Trip-zone 4 (/TZ4) Select 0h = Disable /TZ4 as a one-shot trip source for this ePWM module 1h = Enable /TZ4 as a one-shot trip source for this ePWM module
10	OSHT3	R/W	0h	Trip-zone 3 (/TZ3) Select 0h = Disable /TZ3 as a one-shot trip source for this ePWM module 1h = Enable /TZ3 as a one-shot trip source for this ePWM module
9	OSHT2	R/W	0h	Trip-zone 2 (/TZ2) Select 0h = Disable /TZ2 as a one-shot trip source for this ePWM module 1h = Enable /TZ2 as a one-shot trip source for this ePWM module
8	OSHT1	R/W	0h	Trip-zone 1 (/TZ1) Select 0h = Disable /TZ1 as a one-shot trip source for this ePWM module 1h = Enable /TZ1 as a one-shot trip source for this ePWM module

Copyright © 2025 Texas Instruments Incorporated

Table 11-1196. TZSEL Register Field Descriptions (continued)

Bit	Field	Type	Reset	Description
7	DCBEVT2	R	0h	Digital Compare Output B Event 2 Select 0h = Disable DCBEVT2 as a CBC trip source for this ePWM module 1h = Enable DCBEVT2 as a CBC trip source for this ePWM module
6	DCAEVT2	R	0h	Digital Compare Output A Event 2 Select 0h = Disable DCAEVT2 as a CBC trip source for this ePWM module 1h = Enable DCAEVT2 as a CBC trip source for this ePWM module
5	CBC6	R/W	0h	Trip-zone 6 (/TZ6) Select 0h = Disable /TZ6 as a CBC trip source for this ePWM module 1h = Enable /TZ6 as a CBC trip source for this ePWM module
4	CBC5	R/W	0h	Trip-zone 5 (/TZ5) Select 0h = Disable /TZ5 as a CBC trip source for this ePWM module 1h = Enable /TZ5 as a CBC trip source for this ePWM module
3	CBC4	R/W	0h	Trip-zone 4 (/TZ4) Select 0h = Disable /TZ4 as a CBC trip source for this ePWM module 1h = Enable /TZ4 as a CBC trip source for this ePWM module
2	CBC3	R/W	0h	Trip-zone 3 (/TZ3) Select 0h = Disable /TZ3 as a CBC trip source for this ePWM module 1h = Enable /TZ3 as a CBC trip source for this ePWM module
1	CBC2	R/W	0h	Trip-zone 2 (/TZ2) Select 0h = Disable /TZ2 as a CBC trip source for this ePWM module 1h = Enable /TZ2 as a CBC trip source for this ePWM module
0	CBC1	R/W	0h	Trip-zone 1 (/TZ1) Select 0h = Disable /TZ1 as a CBC trip source for this ePWM module 1h = Enable /TZ1 as a CBC trip source for this ePWM module

Copyright © 2025 Texas Instruments Incorporated

11.4.2.4.18 TZEINT Register (Offset = 28h) [reset = 0h]

TZEINT is shown in Figure 11-283 and described in Table 11-1197.

Figure 11-283. TZEINT Register

15	14	13	12	11	10	9	8
RESERVED							
R-0h							
7	6	5	4	3	2	1	0
RESERVED	DCBEVT2	DCBEVT1	DCAEVT2	DCAEVT1	OST	CBC	RESERVED
R-0h	R/W-0h	R/W-0h	R/W-0h	R/W-0h	R/W-0h	R/W-0h	R-0h

LEGEND: R/W = Read/Write; R = Read only; W1toCl = Write 1 to clear bit; -*n* = value after reset

Table 11-1197. TZEINT Register Field Descriptions

Bit	Field	Type	Reset	Description
15-7	RESERVED	R	0h	Reserved
6	DCBEVT2	R/W	0h	Digital Comparator Output B Event 2 Interrupt Enable 0h = Disabled 1h = Enabled
5	DCBEVT1	R/W	0h	Digital Comparator Output B Event 1 Interrupt Enable 0h = Disabled 1h = Enabled
4	DCAEVT2	R/W	0h	Digital Comparator Output A Event 2 Interrupt Enable 0h = Disabled 1h = Enabled
3	DCAEVT1	R/W	0h	Digital Comparator Output A Event 1 Interrupt Enable 0h = Disabled 1h = Enabled
2	OST	R/W	0h	Trip-zone One-Shot Interrupt Enable 0h = Disable one-shot interrupt generation 1h = Enable Interrupt generation a one-shot trip event will cause a EPWMx_TZINT VIM interrupt.
1	CBC	R/W	0h	Trip-zone Cycle-by-Cycle Interrupt Enable 0h = Disable cycle-by-cycle interrupt generation 1h = Enable interrupt generation a cycle-by-cycle trip event will cause an EPWMx_TZINT VIM interrupt.
0	RESERVED	R	0h	Reserved

Copyright © 2025 Texas Instruments Incorporated

11.4.2.4.19 TZCTL Register (Offset = 2Ah) [reset = 0h]

TZCTL is shown in Figure 11-284 and described in Table 11-1198.

Figure 11-284. TZCTL Register

15	14	13	12	11	10	9	8
RESERVED				DCBEVT2		DCBEVT1	
R-0h				R/W-0h		R/W-0h	
7	6	5	4	3	2	1	0
DCAEVT2		DCAEVT1		TZB		TZA	
R/W-0h		R/W-0h		R/W-0h		R/W-0h	

LEGEND: R/W = Read/Write; R = Read only; W1toCl = Write 1 to clear bit; -*n* = value after reset

Table 11-1198. TZCTL Register Field Descriptions

Bit	Field	Type	Reset	Description
15-12	RESERVED	R	0h	Reserved
11-10	DCBEVT2	R/W	0h	Digital Compare Output B Event 2 Action On EPWMxB: 0h = High-impedance (EPWMxB = High-impedance state) 1h = Force EPWMxB to a high state 2h = Force EPWMxB to a low state 3h = Do Nothing, trip action is disabled
9-8	DCBEVT1	R/W	0h	Digital Compare Output B Event 1 Action On EPWMxB: 0h = High-impedance (EPWMxB = High-impedance state) 1h = Force EPWMxB to a high state 2h = Force EPWMxB to a low state 3h = Do Nothing, trip action is disabled
7-6	DCAEVT2	R/W	0h	Digital Compare Output A Event 2 Action On EPWMxA: 0h = High-impedance (EPWMxA = High-impedance state) 1h = Force EPWMxA to a high state 2h = Force EPWMxA to a low state 3h = Do Nothing, trip action is disabled
5-4	DCAEVT1	R/W	0h	Digital Compare Output A Event 1 Action On EPWMxA: 0h = High-impedance (EPWMxA = High-impedance state) 1h = Force EPWMxA to a high state 2h = Force EPWMxA to a low state 3h = Do Nothing, trip action is disabled
3-2	TZB	R/W	0h	When a trip event occurs the following action is taken on output EPWMxB. Which trip-zone pins can cause an event is defined in the TZSEL register. 0h = High-impedance (EPWMxB = High-impedance state) 1h = Force EPWMxB to a high state 2h = Force EPWMxB to a low state 3h = Do nothing, no action is taken on EPWMxB
1-0	TZA	R/W	0h	When a trip event occurs the following action is taken on output EPWMxA. Which trip-zone pins can cause an event is defined in the TZSEL register. 0h = High-impedance (EPWMxA = High-impedance state) 1h = Force EPWMxA to a high state 2h = Force EPWMxA to a low state 3h = Do nothing, no action is taken on EPWMxA

Copyright © 2025 Texas Instruments Incorporated

11.4.2.4.20 TZCLR Register (Offset = 2Ch) [reset = 0h]

TZCLR is shown in Figure 11-285 and described in Table 11-1199.

Figure 11-285. TZCLR Register

15	14	13	12	11	10	9	8
RESERVED							
R-0h							
7	6	5	4	3	2	1	0
RESERVED	DCBEVT2	DCBEVT1	DCAEVT2	DCAEVT1	OST	CBC	INT
R-0h	R/W1C-0h	R/W1C-0h	R/W1C-0h	R/W1C-0h	R/W-0h	R/W-0h	R/W-0h

LEGEND: R/W = Read/Write; R = Read only; W1toCl = Write 1 to clear bit; -*n* = value after reset

Table 11-1199. TZCLR Register Field Descriptions

Bit	Field	Type	Reset	Description
15-7	RESERVED	R	0h	Reserved
6	DCBEVT2	R/W1C	0h	Clear Flag for Digital Compare Output B Event 2 0h = Writing 0 has no effect. This bit always reads back 0. 1h = Writing 1 clears the DCBEVT2 event trip condition.
5	DCBEVT1	R/W1C	0h	Clear Flag for Digital Compare Output B Event 1 0h = Writing 0 has no effect. This bit always reads back 0. 1h = Writing 1 clears the DCBEVT1 event trip condition.
4	DCAEVT2	R/W1C	0h	Clear Flag for Digital Compare Output A Event 2 0h = Writing 0 has no effect. This bit always reads back 0. 1h = Writing 1 clears the DCAEVT2 event trip condition.
3	DCAEVT1	R/W1C	0h	Clear Flag for Digital Compare Output A Event 1 0h = Writing 0 has no effect. This bit always reads back 0. 1h = Writing 1 clears the DCAEVT1 event trip condition.
2	OST	R/W	0h	Clear Flag for One-Shot Trip (OST) Latch 0h = Has no effect. Always reads back a 0. 1h = Clears this Trip (set) condition.
1	CBC	R/W	0h	Clear Flag for Cycle-By-Cycle (CBC) Trip Latch 0h = Has no effect. Always reads back a 0. 1h = Clears this Trip (set) condition.
0	INT	R/W	0h	Global Interrupt Clear Flag. NOTE: No further EPWMx_TZINT VIM interrupts will be generated until the flag is cleared. If the TZFLG.INT bit is cleared and any of the other flag bits are set, then another interrupt pulse will be generated. Clearing all flag bits will prevent further interrupts. 0h = Has no effect. Always reads back a 0. 1h = Clears the trip-interrupt flag for this ePWM module, TZFLG.INT.

Copyright © 2025 Texas Instruments Incorporated

11.4.2.4.21 TZFLG Register (Offset = 2Eh) [reset = 0h]

TZFLG is shown in Figure 11-286 and described in Table 11-1200.

Figure 11-286. TZFLG Register

15	14	13	12	11	10	9	8
RESERVED							
R-0h							
7	6	5	4	3	2	1	0
RESERVED	DCBEVT2	DCBEVT1	DCAEVT2	DCAEVT1	OST	CBC	INT
R-0h	R-0h	R-0h	R-0h	R-0h	R-0h	R-0h	R-0h

LEGEND: R/W = Read/Write; R = Read only; W1toCl = Write 1 to clear bit; -*n* = value after reset

Table 11-1200. TZFLG Register Field Descriptions

Bit	Field	Type	Reset	Description
15-7	RESERVED	R	0h	Reserved
6	DCBEVT2	R	0h	Latched Status Flag for Digital Compare Output B Event 2 0h = Indicates no trip event has occurred on DCBEVT2 1h = Indicates a trip event has occurred for the event defined for DCBEVT2
5	DCBEVT1	R	0h	Latched Status Flag for Digital Compare Output B Event 1 0h = Indicates no trip event has occurred on DCBEVT1 1h = Indicates a trip event has occurred for the event defined for DCBEVT1
4	DCAEVT2	R	0h	Latched Status Flag for Digital Compare Output A Event 2 0h = Indicates no trip event has occurred on DCAEVT2 1h = Indicates a trip event has occurred for the event defined for DCAEVT2
3	DCAEVT1	R	0h	Latched Status Flag for Digital Compare Output A Event 1 0h = Indicates no trip event has occurred on DCAEVT1 1h = Indicates a trip event has occurred for the event defined for DCAEVT1
2	OST	R	0h	Latched Status Flag for A One-Shot Trip Event. This bit is cleared by writing the appropriate value to the TZCLR register. 0h = No one-shot trip event has occurred. 1h = Indicates a trip event has occurred on a pin selected as a one-shot trip source.
1	CBC	R	0h	Latched Status Flag for Cycle-By-Cycle Trip Event. This bit is cleared by writing the appropriate value to the TZCLR register. 0h = No cycle-by-cycle trip event has occurred. 1h = Indicates a trip event has occurred on a signal selected as a cycle-by-cycle trip source. The TZFLG.CBC bit will remain set until it is manually cleared by the user. If the cycle-by-cycle trip event is still present when the CBC bit is cleared, then CBC will be immediately set again. The specified condition on the signal is automatically cleared when the ePWM time-base counter reaches zero (TBCTR = 0x0000) if the trip condition is no longer present. The condition on the signal is only cleared when the TBCTR = 0x0000 no matter where in the cycle the CBC flag is cleared.

Copyright © 2025 Texas Instruments Incorporated

Table 11-1200. TZFLG Register Field Descriptions (continued)

Bit	Field	Type	Reset	Description
0	INT	R	0h	Latched Trip Interrupt Status Flag. No further EPWMx_TZINT VIM interrupts will be generated until this flag is cleared. If the interrupt flag is cleared when either CBC or OST is set, then another interrupt pulse will be generated. Clearing all flag bits will prevent further interrupts. This bit is cleared by writing the appropriate value to the TZCLR register. 0h = Indicates no interrupt has been generated. 1h = Indicates an EPWMx_TZINT VIM interrupt was generated because of a trip condition.

Copyright © 2025 Texas Instruments Incorporated

11.4.2.4.22 ETSEL Register (Offset = 30h) [reset = 0h]

ETSEL is shown in Figure 11-287 and described in Table 11-1201.

Figure 11-287. ETSEL Register

15	14	13	12	11	10	9	8
SOCBEN	SOCBSEL			SOCAEN	SOCASEL		
R/W-0h	R/W-0h			R/W-0h	R/W-0h		
7	6	5	4	3	2	1	0
RESERVED				INTEN	INTSEL		
R-0h				R/W-0h	R/W-0h		

LEGEND: R/W = Read/Write; R = Read only; W1toCl = Write 1 to clear bit; -*n* = value after reset

Table 11-1201. ETSEL Register Field Descriptions

Bit	Field	Type	Reset	Description
15	SOCBEN	R/W	0h	Enable the ADC Start of Conversion B (EPWMxSOCB) Pulse 0h = Disable EPWMxSOCB 1h = Enable EPWMxSOCB pulse
14-12	SOCBSEL	R/W	0h	EPWMxSOCB Selection Options. These bits determine when a EPWMxSOCB pulse will be generated. 0h = Enable DCBEVT1.soc event. 1h = Enable event time-base counter equal to zero. (TBCTR = 0x0000). 2h = Enable event time-base counter equal to period (TBCTR = TBPRD). 3h = Enable event time-base counter equal to zero or period (TBCTR = 0x0000 or TBCTR = TBPRD). This mode is useful in up-down count mode. 4h = Enable event time-base counter equal to CMPA when the timer is incrementing. 5h = Enable event time-base counter equal to CMPA when the timer is decrementing. 6h = Enable event: time-base counter equal to CMPB when the timer is incrementing. 7h = Enable event: time-base counter equal to CMPB when the timer is decrementing.
11	SOCAEN	R/W	0h	Enable the ADC Start of Conversion A (EPWMxSOCA) Pulse 0h = Disable EPWMxSOCA 1h = Enable EPWMxSOCA pulse

Copyright © 2025 Texas Instruments Incorporated

Table 11-1201. ETSEL Register Field Descriptions (continued)

Bit	Field	Type	Reset	Description
10-8	SOCASEL	R/W	0h	EPWMxSOCA Selection Options. These bits determine when a EPWMxSOCA pulse will be generated. 0h = Enable DCAEVT1.soc event. 1h = Enable event time-base counter equal to zero. (TBCTR = 0x0000). 2h = Enable event time-base counter equal to period (TBCTR = TBPRD). 3h = Enable event time-base counter equal to zero or period (TBCTR = 0x0000 or TBCTR = TBPRD). This mode is useful in up-down count mode. 4h = Enable event time-base counter equal to CMPA when the timer is incrementing. 5h = Enable event time-base counter equal to CMPA when the timer is decrementing. 6h = Enable event: time-base counter equal to CMPB when the timer is incrementing. 7h = Enable event: time-base counter equal to CMPB when the timer is decrementing.
7-4	RESERVED	R	0h	Reserved
3	INTEN	R/W	0h	Enable ePWM Interrupt (EPWMx_INT) Generation 0h = Disable EPWMx_INT generation 1h = Enable EPWMx_INT generation
2-0	INTSEL	R/W	0h	ePWM Interrupt (EPWMx_INT) Selection Options 0h = Reserved 1h = Enable event time-base counter equal to zero. (TBCTR = 0x0000). 2h = Enable event time-base counter equal to period (TBCTR = TBPRD). 3h = Enable event time-base counter equal to zero or period (TBCTR = 0x0000 or TBCTR = TBPRD). This mode is useful in up-down count mode. 4h = Enable event time-base counter equal to CMPA when the timer is incrementing. 5h = Enable event time-base counter equal to CMPA when the timer is decrementing. 6h = Enable event: time-base counter equal to CMPB when the timer is incrementing. 7h = Enable event: time-base counter equal to CMPB when the timer is decrementing.

Copyright © 2025 Texas Instruments Incorporated

11.4.2.4.23 TZFRC Register (Offset = 32h) [reset = 0h]

TZFRC is shown in Figure 11-288 and described in Table 11-1202.

Figure 11-288. TZFRC Register

15	14	13	12	11	10	9	8
RESERVED							
R-0h							
7	6	5	4	3	2	1	0
RESERVED	DCBEVT2	DCBEVT1	DCAEVT2	DCAEVT1	OST	CBC	RESERVED
R-0h	R/W-0h	R/W-0h	R/W-0h	R/W-0h	R/W-0h	R/W-0h	R-0h

LEGEND: R/W = Read/Write; R = Read only; W1toCl = Write 1 to clear bit; -*n* = value after reset

Table 11-1202. TZFRC Register Field Descriptions

Bit	Field	Type	Reset	Description
15-7	RESERVED	R	0h	Reserved
6	DCBEVT2	R/W	0h	Force Flag for Digital Compare Output B Event 2 0h = Writing 0 has no effect. This bit always reads back 0. 1h = Writing 1 forces the DCBEVT2 event trip condition and sets the TZFLG[DCBEVT2] bit.
5	DCBEVT1	R/W	0h	Force Flag for Digital Compare Output B Event 1 0h = Writing 0 has no effect. This bit always reads back 0. 1h = Writing 1 forces the DCBEVT1 event trip condition and sets the TZFLG[DCBEVT1] bit.
4	DCAEVT2	R/W	0h	Force Flag for Digital Compare Output A Event 2 0h = Writing 0 has no effect. This bit always reads back 0. 1h = Writing 1 forces the DCAEVT2 event trip condition and sets the TZFLG[DCAEVT2] bit.
3	DCAEVT1	R/W	0h	Force Flag for Digital Compare Output A Event 1 0h = Writing 0 has no effect. This bit always reads back 0. 1h = Writing 1 forces the DCAEVT1 event trip condition and sets the TZFLG[DCAEVT1] bit.
2	OST	R/W	0h	Force a One-Shot Trip Event via Software 0h = Writing of 0 is ignored. Always reads back a 0. 1h = Forces a one-shot trip event and sets the TZFLG[OST] bit.
1	CBC	R/W	0h	Force a Cycle-by-Cycle Trip Event via Software 0h = Writing of 0 is ignored. Always reads back a 0. 1h = Forces a cycle-by-cycle trip event and sets the TZFLG[CBC] bit.
0	RESERVED	R	0h	Reserved

Copyright © 2025 Texas Instruments Incorporated

11.4.2.4.24 ETFLG Register (Offset = 34h) [reset = 0h]

ETFLG is shown in Figure 11-289 and described in Table 11-1203.

Figure 11-289. ETFLG Register

15	14	13	12	11	10	9	8
RESERVED							
R-0h							
7	6	5	4	3	2	1	0
RESERVED				SOCB	SOCA	RESERVED	INT
R-0h				R-0h	R-0h	R-0h	R-0h

LEGEND: R/W = Read/Write; R = Read only; W1toCl = Write 1 to clear bit; -*n* = value after reset

Table 11-1203. ETFLG Register Field Descriptions

Bit	Field	Type	Reset	Description
15-4	RESERVED	R	0h	Reserved
3	SOCB	R	0h	Latched ePWM ADC Start-of-Conversion B (EPWMxSOCB) Status Flag 0h = Indicates no EPWMxSOCB event occurred. 1h = Indicates that a start of conversion pulse was generated on EPWMxSOCB. The EPWMxSOCB output will continue to be generated even if the flag bit is set.
2	SOCA	R	0h	Latched ePWM ADC Start-of-Conversion A (EPWMxSOCA) Status Flag. Unlike the ETFLG[INT] flag, the EPWMxSOCA output will continue to pulse even if the flag bit is set. 0h = Indicates no event occurred. 1h = Indicates that a start of conversion pulse was generated on EPWMxSOCA. The EPWMxSOCA output will continue to be generated even if the flag bit is set.
1	RESERVED	R	0h	Reserved
0	INT	R	0h	Latched ePWM Interrupt (EPWMx_INT) Status Flag 0h = Indicates no event occurred. 1h = Indicates that an ePWMx interrupt (EWPMx_INT) was generated. No further interrupts will be generated until the flag bit is cleared. Up to one interrupt can be pending while the ETFLG[INT] bit is still set. If an interrupt is pending, it will not be generated until after the ETFLG[INT] bit is cleared. Refer to Event-Trigger Interrupt Generator figure.

Copyright © 2025 Texas Instruments Incorporated

11.4.2.4.25 ETPS Register (Offset = 36h) [reset = 0h]

ETPS is shown in Figure 11-290 and described in Table 11-1204.

Figure 11-290. ETPS Register

15	14	13	12	11	10	9	8
SOCBCNT		SOCBPRD		SOCACNT		SOCAPRD	
R-0h		R/W-0h		R-0h		R/W-0h	
7	6	5	4	3	2	1	0
RESERVED				INTCNT		INTPRD	
R-0h				R-0h		R/W-0h	

LEGEND: R/W = Read/Write; R = Read only; W1toCl = Write 1 to clear bit; -*n* = value after reset

Table 11-1204. ETPS Register Field Descriptions

Bit	Field	Type	Reset	Description
15-14	SOCBCNT	R	0h	ePWM ADC Start-of-Conversion B Event (EPWMxSOCB) Counter Register. These bits indicate how many selected ETSEL[SOCBSEL] events have occurred: 0h = No events have occurred. 1h = 1 event has occurred. 2h = 2 events have occurred. 3h = 3 events have occurred.
13-12	SOCBPRD	R/W	0h	ePWM ADC Start-of-Conversion B Event (EPWMxSOCB) Period Select. These bits determine how many selected ETSEL[SOCBSEL] events need to occur before an EPWMxSOCB pulse is generated. To be generated, the pulse must be enabled (ETSEL[SOCBEN] = 1). The SOCB pulse will be generated even if the status flag is set from a previous start of conversion (ETFLG[SOCB] = 1). Once the SOCB pulse is generated, the ETPS[SOCBCNT] bits will automatically be cleared. 0h = Disable the SOCB event counter. No EPWMxSOCB pulse will be generated 1h = Generate the EPWMxSOCB pulse on the first event: ETPS[SOCBCNT] = 0,1 2h = Generate the EPWMxSOCB pulse on the second event: ETPS[SOCBCNT] = 1,0 3h = Generate the EPWMxSOCB pulse on the third event: ETPS[SOCBCNT] = 1,1
11-10	SOCACNT	R	0h	ePWM ADC Start-of-Conversion A Event (EPWMxSOCA) Counter Register. These bits indicate how many selected ETSEL[SOCASEL] events have occurred: 0h = No events have occurred. 1h = 1 event has occurred. 2h = 2 events have occurred. 3h = 3 events have occurred.

Copyright © 2025 Texas Instruments Incorporated

Table 11-1204. ETPS Register Field Descriptions (continued)

Bit	Field	Type	Reset	Description
9-8	SOCAPRD	R/W	0h	ePWM ADC Start-of-Conversion A Event (EPWMxSOCA) Period Select. These bits determine how many selected ETSEL[SOCASEL] events need to occur before an EPWMxSOCA pulse is generated. To be generated, the pulse must be enabled (ETSEL[SOCAEN] = 1). The SOCA pulse will be generated even if the status flag is set from a previous start of conversion (ETFLG[SOCA] = 1). Once the SOCA pulse is generated, the ETPS[SOCACNT] bits will automatically be cleared. 0h = Disable the SOCA event counter. No EPWMxSOCA pulse will be generated 1h = Generate the EPWMxSOCA pulse on the first event: ETPS[SOCACNT] = 0,1 2h = Generate the EPWMxSOCA pulse on the second event: ETPS[SOCACNT] = 1,0 3h = Generate the EPWMxSOCA pulse on the third event: ETPS[SOCACNT] = 1,1
7-4	RESERVED	R	0h	Reserved
3-2	INTCNT	R	0h	ePWM Interrupt Event (EPWMx_INT) Counter Register. These bits indicate how many selected ETSEL[INTSEL] events have occurred. These bits are automatically cleared when an interrupt pulse is generated. If interrupts are disabled, ETSEL[INT] = 0 or the interrupt flag is set, ETFLG[INT] = 1, the counter will stop counting events when it reaches the period value ETPS[INTCNT] = ETPS[INTPRD]. 0h = No events have occurred. 1h = 1 event has occurred. 2h = 2 events have occurred. 3h = 3 events have occurred.
1-0	INTPRD	R/W	0h	ePWM Interrupt (EPWMx_INT) Period Select. These bits determine how many selected ETSEL[INTSEL] events need to occur before an interrupt is generated. To be generated, the interrupt must be enabled (ETSEL[INT] = 1). If the interrupt status flag is set from a previous interrupt (ETFLG[INT] = 1) then no interrupt will be generated until the flag is cleared via the ETCLR[INT] bit. This allows for one interrupt to be pending while another is still being serviced. Once the interrupt is generated, the ETPS[INTCNT] bits will automatically be cleared. Writing a INTPRD value that is the same as the current counter value will trigger an interrupt if it is enabled and the status flag is clear. Writing a INTPRD value that is less than the current counter value will result in an undefined state. If a counter event occurs at the same instant as a new zero or non-zero INTPRD value is written, the counter is incremented. 0h = Disable the interrupt event counter. No interrupt will be generated and ETFRC[INT] is ignored. 1h = Generate an interrupt on the first event INTCNT = 01 (first event) 2h = Generate interrupt on ETPS[INTCNT] = 1,0 (second event) 3h = Generate interrupt on ETPS[INTCNT] = 1,1 (third event)

Copyright © 2025 Texas Instruments Incorporated

11.4.2.4.26 ETFRC Register (Offset = 38h) [reset = 0h]

ETFRC is shown in Figure 11-291 and described in Table 11-1205.

Figure 11-291. ETFRC Register

15	14	13	12	11	10	9	8
RESERVED							
R-0h							
7	6	5	4	3	2	1	0
RESERVED				SOCB	SOCA	RESERVED	INT
R-0h				R/W-0h	R/W-0h	R-0h	R/W-0h

LEGEND: R/W = Read/Write; R = Read only; W1toCl = Write 1 to clear bit; -*n* = value after reset

Table 11-1205. ETFRC Register Field Descriptions

Bit	Field	Type	Reset	Description
15-4	RESERVED	R	0h	Reserved
3	SOCB	R/W	0h	SOCB Force Bit. The SOCB pulse will only be generated if the event is enabled in the ETSEL register. The ETFLG[SOCB] flag bit will be set regardless. 0h = Has no effect. Always reads back a 0. 1h = Generates a pulse on EPWMxSOCB and sets the SOCBFLG bit. This bit is used for test purposes.
2	SOCA	R/W	0h	SOCA Force Bit. The SOCA pulse will only be generated if the event is enabled in the ETSEL register. The ETFLG[SOCA] flag bit will be set regardless. 0h = Writing 0 to this bit will be ignored. Always reads back a 0. 1h = Generates a pulse on EPWMxSOCA and set the SOCAFLG bit. This bit is used for test purposes.
1	RESERVED	R	0h	Reserved
0	INT	R/W	0h	INT Force Bit. The interrupt will only be generated if the event is enabled in the ETSEL register. The INT flag bit will be set regardless. 0h = Writing 0 to this bit will be ignored. Always reads back a 0. 1h = Generates an interrupt on /EPWMxINT and set the INT flag bit. This bit is used for test purposes.

Copyright © 2025 Texas Instruments Incorporated

11.4.2.4.27 ETCLR Register (Offset = 3Ah) [reset = 0h]

ETCLR is shown in Figure 11-292 and described in Table 11-1206.

Figure 11-292. ETCLR Register

15	14	13	12	11	10	9	8
RESERVED							
R-0h							
7	6	5	4	3	2	1	0
RESERVED				SOCB	SOCA	RESERVED	INT
R-0h				R/W-0h	R/W-0h	R-0h	R/W-0h

LEGEND: R/W = Read/Write; R = Read only; W1toCl = Write 1 to clear bit; -*n* = value after reset

Table 11-1206. ETCLR Register Field Descriptions

Bit	Field	Type	Reset	Description
15-4	RESERVED	R	0h	Reserved
3	SOCB	R/W	0h	ePWM ADC Start-of-Conversion B (EPWMxSOCB) Flag Clear Bit 0h = Writing a 0 has no effect. Always reads back a 0. 1h = Clears the ETFLG[SOCB] flag bit.
2	SOCA	R/W	0h	ePWM ADC Start-of-Conversion A (EPWMxSOCA) Flag Clear Bit 0h = Writing a 0 has no effect. Always reads back a 0. 1h = Clears the ETFLG[SOCA] flag bit.
1	RESERVED	R	0h	Reserved
0	INT	R/W	0h	ePWM Interrupt (EPWMx_INT) Flag Clear Bit 0h = Writing a 0 has no effect. Always reads back a 0. 1h = Clears the ETFLG[INT] flag bit and enable further interrupts pulses to be generated.

Copyright © 2025 Texas Instruments Incorporated

11.4.2.4.28 PCCTL Register (Offset = 3Eh) [reset = 0h]

PCCTL is shown in Figure 11-293 and described in Table 11-1207.

Figure 11-293. PCCTL Register

15	14	13	12	11	10	9	8
RESERVED					CHPDUTY		
R-0h					R/W-0h		
7	6	5	4	3	2	1	0
CHPFREQ			OSHTWTH				CHPEN
R/W-0h			R/W-0h				R/W-0h

LEGEND: R/W = Read/Write; R = Read only; W1toCl = Write 1 to clear bit; -*n* = value after reset

Table 11-1207. PCCTL Register Field Descriptions

Bit	Field	Type	Reset	Description
15-11	RESERVED	R	0h	Reserved
10-8	CHPDUTY	R/W	0h	Chopping Clock Duty Cycle 0h = Duty = 1/8 (12.5%) 1h = Duty = 2/8 (25.0%) 2h = Duty = 3/8 (37.5%) 3h = Duty = 4/8 (50.0%) 4h = Duty = 5/8 (62.5%) 5h = Duty = 6/8 (75.0%) 6h = Duty = 7/8 (87.5%) 7h = Reserved
7-5	CHPFREQ	R/W	0h	Chopping Clock Frequency 0h = Divide by 1 (no prescale, = 12.5 MHz at 100 MHz VCLK4) 1h = Divide by 2 (6.25 MHz at 100 MHz VCLK4) 2h = Divide by 3 (4.16 MHz at 100 MHz VCLK4) 3h = Divide by 4 (3.12 MHz at 100 MHz VCLK4) 4h = Divide by 5 (2.50 MHz at 100 MHz VCLK4) 5h = Divide by 6 (2.08 MHz at 100 MHz VCLK4) 6h = Divide by 7 (1.78 MHz at 100 MHz VCLK4) 7h = Divide by 8 (1.56 MHz at 100 MHz VCLK4)
4-1	OSHTWTH	R/W	0h	One-Shot Pulse Width 0h = 1 x VCLK4 / 8 wide (= 80 nS at 100 MHz VCLK4) 1h = 2 x VCLK4 / 8 wide (= 160 nS at 100 MHz VCLK4) 2h = 3 x VCLK4 / 8 wide (= 240 nS at 100 MHz VCLK4) 3h = 4 x VCLK4 / 8 wide (= 320 nS at 100 MHz VCLK4) 4h = 5 x VCLK4 / 8 wide (= 400 nS at 100 MHz VCLK4) 5h = 6 x VCLK4 / 8 wide (= 480 nS at 100 MHz VCLK4) 6h = 7 x VCLK4 / 8 wide (= 560 nS at 100 MHz VCLK4) 7h = 8 x VCLK4 / 8 wide (= 640 nS at 100 MHz VCLK4) 8h = 9 x VCLK4 / 8 wide (= 720 nS at 100 MHz VCLK4) 9h = 10 x VCLK4 / 8 wide (= 800 nS at 100 MHz VCLK4) Ah = 11 x VCLK4 / 8 wide (= 880 nS at 100 MHz VCLK4) Bh = 12 x VCLK4 / 8 wide (= 960 nS at 100 MHz VCLK4) Ch = 13 x VCLK4 / 8 wide (= 1040 nS at 100 MHz VCLK4) Dh = 14 x VCLK4 / 8 wide (= 1120 nS at 100 MHz VCLK4) Eh = 15 x VCLK4 / 8 wide (= 1200 nS at 100 MHz VCLK4) Fh = 16 x VCLK4 / 8 wide (= 1280 nS at 100 MHz VCLK4)

Copyright © 2025 Texas Instruments Incorporated

Table 11-1207. PCCTL Register Field Descriptions (continued)

Bit	Field	Type	Reset	Description
0	CHPEN	R/W	0h	PWM-chopping Enable 0h = Disable (bypass) PWM chopping function 1h = Enable chopping function

Copyright © 2025 Texas Instruments Incorporated

11.4.2.4.29 DCACTL Register (Offset = 60h) [reset = 0h]

DCACTL is shown in Figure 11-294 and described in Table 11-1208.

Figure 11-294. DCACTL Register

15	14	13	12	11	10	9	8
RESERVED						EVT2FRC_SYNCSEL	EVT2SRCSEL
R-0h						R/W-0h	R/W-0h
7	6	5	4	3	2	1	0
RESERVED				EVT1SYNCE	EVT1SOCE	EVT1FRC_SYNCSEL	EVT1SRCSEL
R-0h				R/W-0h	R/W-0h	R/W-0h	R/W-0h

LEGEND: R/W = Read/Write; R = Read only; W1toCl = Write 1 to clear bit; -*n* = value after reset

Table 11-1208. DCACTL Register Field Descriptions

Bit	Field	Type	Reset	Description
15-10	RESERVED	R	0h	Reserved
9	EVT2FRC_SYNCSEL	R/W	0h	DCAEVT2 Force Synchronization Signal Select 0h = Source Is Synchronous Signal 1h = Source Is Asynchronous Signal
8	EVT2SRCSEL	R/W	0h	DCAEVT2 Source Signal Select 0h = Source Is DCAEVT2 Signal 1h = Source Is DCEVTFILT Signal
7-4	RESERVED	R	0h	Reserved
3	EVT1SYNCE	R/W	0h	DCAEVT1 SYNC, Enable/Disable 0h = SYNC Generation Disabled 1h = SYNC Generation Enabled
2	EVT1SOCE	R/W	0h	DCAEVT1 SOC, Enable/Disable 0h = SOC Generation Disabled 1h = SOC Generation Enabled
1	EVT1FRC_SYNCSEL	R/W	0h	DCAEVT1 Force Synchronization Signal Select 0h = Source Is Synchronous Signal 1h = Source Is Asynchronous Signal
0	EVT1SRCSEL	R/W	0h	DCAEVT1 Source Signal Select 0h = Source Is DCAEVT1 Signal 1h = Source Is DCEVTFILT Signal

Copyright © 2025 Texas Instruments Incorporated

11.4.2.4.30 DCTRIPSEL Register (Offset = 62h) [reset = 0h]

DCTRIPSEL is shown in Figure 11-295 and described in Table 11-1209.

Figure 11-295. DCTRIPSEL Register

15	14	13	12	11	10	9	8
DCBLCOMPSEL				DCBHCOMPSEL			
R/W-0h				R/W-0h			
7	6	5	4	3	2	1	0
DCALCOMPSEL				DCAHCOMPSEL			
R/W-0h				R/W-0h			

LEGEND: R/W = Read/Write; R = Read only; W1toCl = Write 1 to clear bit; -*n* = value after reset

Table 11-1209. DCTRIPSEL Register Field Descriptions

Bit	Field	Type	Reset	Description
15-12	DCBLCOMPSEL	R/W	0h	Digital Compare B Low Input Select. Defines the source for the DCBL input. The TZ signals, when used as trip signals, are treated as normal inputs and can be defined as active high or active low. Values not shown are reserved. If a device does not have a particular comparitor, then that option is reserved. 0h = /TZ1 input 1h = /TZ2 input 2h = /TZ3 input
11-8	DCBHCOMPSEL	R/W	0h	Digital Compare B High Input Select. Defines the source for the DCBH input. The TZ signals, when used as trip signals, are treated as normal inputs and can be defined as active high or active low. Values not shown are reserved. If a device does not have a particular comparitor, then that option is reserved. 0h = /TZ1 input 1h = /TZ2 input 2h = /TZ3 input
7-4	DCALCOMPSEL	R/W	0h	Digital Compare A Low Input Select. Defines the source for the DCAL input. The TZ signals, when used as trip signals, are treated as normal inputs and can be defined as active high or active low. Values not shown are reserved. If a device does not have a particular comparitor, then that option is reserved. 0h = /TZ1 input 1h = /TZ2 input 2h = /TZ3 input
3-0	DCAHCOMPSEL	R/W	0h	Digital Compare A High Input Select. Defines the source for the DCAH input. The TZ signals, when used as trip signals, are treated as normal inputs and can be defined as active high or active low. Values not shown are reserved. If a device does not have a particular comparitor, then that option is reserved. 0h = /TZ1 input 1h = /TZ2 input 2h = /TZ3 input

Copyright © 2025 Texas Instruments Incorporated

11.4.2.4.31 DCFCTL Register (Offset = 64h) [reset = 0h]

DCFCTL is shown in Figure 11-296 and described in Table 11-1210.

Figure 11-296. DCFCTL Register

15	14	13	12	11	10	9	8
RESERVED				RESERVED			
R-0h				R-0h			
7	6	5	4	3	2	1	0
RESERVED	RESERVED	PULSESEL		BLANKINV	BLANKE	SRCSEL	
R-0h	R-0h	R/W-0h		R/W-0h	R/W-0h	R/W-0h	

LEGEND: R/W = Read/Write; R = Read only; W1toCl = Write 1 to clear bit; -*n* = value after reset

Table 11-1210. DCFCTL Register Field Descriptions

Bit	Field	Type	Reset	Description
15-13	RESERVED	R	0h	Reserved
12-8	RESERVED	R	0h	Reserved for TI Test
7	RESERVED	R	0h	Reserved
6	RESERVED	R	0h	Reserved for TI Test
5-4	PULSESEL	R/W	0h	Pulse Select For Blanking and Capture Alignment 0h = Time-base counter equal to period (TBCTR = TBPRD) 1h = Time-base counter equal to zero (TBCTR = 0x0000) 2h = Reserved 3h = Reserved
3	BLANKINV	R/W	0h	Blanking Window Inversion 0h = Blanking window not inverted 1h = Blanking window inverted
2	BLANKE	R/W	0h	Blanking Window Enable/Disable 0h = Blanking window is disabled 1h = Blanking window is enabled
1-0	SRCSEL	R/W	0h	Filter Block Signal Source Select 0h = Source Is DCAEVT1 Signal 1h = Source Is DCAEVT2 Signal 2h = Source Is DCBEVT1 Signal 3h = Source Is DCBEVT2 Signal

Copyright © 2025 Texas Instruments Incorporated

11.4.2.4.32 DCBCTL Register (Offset = 66h) [reset = 0h]

DCBCTL is shown in Figure 11-297 and described in Table 11-1211.

Figure 11-297. DCBCTL Register

15	14	13	12	11	10	9	8
RESERVED						EVT2FRC_SYNCSEL	EVT2SRCSEL
R-0h						R/W-0h	R/W-0h
7	6	5	4	3	2	1	0
RESERVED				EVT1SYNCE	EVT1SOCE	EVT1FRC_SYNCSEL	EVT1SRCSEL
R-0h				R/W-0h	R/W-0h	R/W-0h	R/W-0h

LEGEND: R/W = Read/Write; R = Read only; W1toCl = Write 1 to clear bit; -*n* = value after reset

Table 11-1211. DCBCTL Register Field Descriptions

Bit	Field	Type	Reset	Description
15-10	RESERVED	R	0h	Reserved
9	EVT2FRC_SYNCSEL	R/W	0h	DCBEVT2 Force Synchronization Signal Select 0h = Source Is Synchronous Signal 1h = Source Is Asynchronous Signal
8	EVT2SRCSEL	R/W	0h	DCBEVT2 Source Signal Select 0h = Source Is DCBEVT2 Signal 1h = Source Is DCEVTFILT Signal
7-4	RESERVED	R	0h	Reserved
3	EVT1SYNCE	R/W	0h	DCBEVT1 SYNC, Enable/Disable 0h = SYNC Generation Disabled 1h = SYNC Generation Enabled
2	EVT1SOCE	R/W	0h	DCBEVT1 SOC, Enable/Disable 0h = SOC Generation Disabled 1h = SOC Generation Enabled
1	EVT1FRC_SYNCSEL	R/W	0h	DCBEVT1 Force Synchronization Signal Select 0h = Source Is Synchronous Signal 1h = Source Is Asynchronous Signal
0	EVT1SRCSEL	R/W	0h	DCBEVT1 Source Signal Select 0h = Source Is DCBEVT1 Signal 1h = Source Is DCEVTFILT Signal

Copyright © 2025 Texas Instruments Incorporated

11.4.2.4.33 DCFOFFSET Register (Offset = 68h) [reset = 0h]

DCFOFFSET is shown in Figure 11-298 and described in Table 11-1212.

Figure 11-298. DCFOFFSET Register

15	14	13	12	11	10	9	8	7	6	5	4	3	2	1	0
OFFSET															
R-0h															

LEGEND: R/W = Read/Write; R = Read only; W1toCl = Write 1 to clear bit; *-n* = value after reset

Table 11-1212. DCFOFFSET Register Field Descriptions

Bit	Field	Type	Reset	Description
15-0	OFFSET	R	0h	Blanking Window Offset. Valid values: 0-FFFFh These 16-bits specify the number of TBCLK cycles from the blanking window reference to the point when the blanking window is applied. The blanking window reference is either period or zero as defined by the DCFCTL[PULSESEL] bit. This offset register is shadowed and the active register is loaded at the reference point defined by DCFCTL[PULSESEL]. The offset counter is also initialized and begins to count down when the active register is loaded. When the counter expires, the blanking window is applied. If the blanking window is currently active, then the blanking window counter is restarted.

Copyright © 2025 Texas Instruments Incorporated

11.4.2.4.34 DCCAPCTL Register (Offset = 6Ah) [reset = 0h]

DCCAPCTL is shown in Figure 11-299 and described in Table 11-1213.

Figure 11-299. DCCAPCTL Register

15	14	13	12	11	10	9	8
RESERVED							
R-0h							
7	6	5	4	3	2	1	0
RESERVED						SHDWMODE	CAPE
R-0h						R/W-0h	R/W-0h

LEGEND: R/W = Read/Write; R = Read only; W1toCl = Write 1 to clear bit; -*n* = value after reset

Table 11-1213. DCCAPCTL Register Field Descriptions

Bit	Field	Type	Reset	Description
15-2	RESERVED	R	0h	Reserved
1	SHDWMODE	R/W	0h	TBCTR Counter Capture Shadow Select Mode 0h = Enable shadow mode. The DCCAP active register is copied to shadow register on a TBCTR = TBPRD or TBCTR = zero event as defined by the DCFCTL[PULSESEL] bit. CPU reads of the DCCAP register will return the shadow register contents. 1h = Active Mode. In this mode the shadow register is disabled. CPU reads from the DCCAP register will always return the active register contents.
0	CAPE	R/W	0h	TBCTR Counter Capture Enable/Disable 0h = Disable the time-base counter capture. 1h = Enable the time-base counter capture.

Copyright © 2025 Texas Instruments Incorporated

11.4.2.4.35 DCFWINDOW Register (Offset = 6Ch) [reset = 0h]

DCFWINDOW is shown in Figure 11-300 and described in Table 11-1214.

Figure 11-300. DCFWINDOW Register

15	14	13	12	11	10	9	8
RESERVED							
R-0h							
7	6	5	4	3	2	1	0
WINDOW							
R/W-0h							

LEGEND: R/W = Read/Write; R = Read only; W1toCl = Write 1 to clear bit; -*n* = value after reset

Table 11-1214. DCFWINDOW Register Field Descriptions

Bit	Field	Type	Reset	Description
15-8	RESERVED	R	0h	Reserved
7-0	WINDOW	R/W	0h	Blanking Window Width. Valid values: 0-FFh specifies the width of the blanking window in TBCLK cycles. The blanking window begins when the offset counter expires. When this occurs, the window counter is loaded and begins to count down. If the blanking window is currently active and the offset counter expires, the blanking window counter is restarted. The blanking window can cross a PWM period boundary. 0h = No blanking window is generated.

Copyright © 2025 Texas Instruments Incorporated

11.4.2.4.36 DCFOFFSETCNT Register (Offset = 6Eh) [reset = 0h]

DCFOFFSETCNT is shown in Figure 11-301 and described in Table 11-1215.

Figure 11-301. DCFOFFSETCNT Register

15	14	13	12	11	10	9	8	7	6	5	4	3	2	1	0
OFFSETCNT															
R-0h															

LEGEND: R/W = Read/Write; R = Read only; W1toCl = Write 1 to clear bit; *-n* = value after reset

Table 11-1215. DCFOFFSETCNT Register Field Descriptions

Bit	Field	Type	Reset	Description
15-0	OFFSETCNT	R	0h	Blanking Offset Counter. Valid values: 0-FFFFh These 16-bits are read only and indicate the current value of the offset counter. The counter counts down to zero and then stops until it is re-loaded on the next period or zero event as defined by the DCFCTL[PULSESEL] bit. The offset counter is not affected by the free/soft emulation bits. That is, it will always continue to count down if the device is halted by a emulation stop.

Copyright © 2025 Texas Instruments Incorporated

11.4.2.4.37 DCCAP Register (Offset = 70h) [reset = 0h]

DCCAP is shown in Figure 11-302 and described in Table 11-1216.

Figure 11-302. DCCAP Register

15	14	13	12	11	10	9	8	7	6	5	4	3	2	1	0
DCCAP															
R-0h															

LEGEND: R/W = Read/Write; R = Read only; W1toCl = Write 1 to clear bit; *-n* = value after reset

Table 11-1216. DCCAP Register Field Descriptions

Bit	Field	Type	Reset	Description
15-0	DCCAP	R	0h	Digital Compare Time-Base Counter Capture. Valid values: 0-FFFFh To enable time-base counter capture, set the DCCAPCLT[CAPE] bit to 1. If enabled, reflects the value of the time-base counter (TBCTR) on the low to high edge transition of a filtered (DCEVTFLT) event. Further capture events are ignored until the next period or zero as selected by the DCFCTL[PULSESEL] bit. Shadowing of DCCAP is enabled and disabled by the DCCAPCTL[SHDWMODE] bit. By default this register is shadowed. If DCCAPCTL[SHDWMODE] = 0, then the shadow is enabled. In this mode, the active register is copied to the shadow register on the TBCTR = TBPRD or TBCTR = zero as defined by the DCFCTL[PULSESEL] bit. CPU reads of this register will return the shadow register value. If DCCAPCTL[SHDWMODE] = 1, then the shadow register is disabled. In this mode, CPU reads will return the active register value. The active and shadow registers share the same memory map address.

Copyright © 2025 Texas Instruments Incorporated

11.4.2.4.38 DCFWINDOWCNT Register (Offset = 72h) [reset = 0h]

DCFWINDOWCNT is shown in Figure 11-303 and described in Table 11-1217.

Figure 11-303. DCFWINDOWCNT Register

15	14	13	12	11	10	9	8
RESERVED							
R-0h							
7	6	5	4	3	2	1	0
WINDOWCNT							
R-0h							

LEGEND: R/W = Read/Write; R = Read only; W1toCl = Write 1 to clear bit; -*n* = value after reset

Table 11-1217. DCFWINDOWCNT Register Field Descriptions

Bit	Field	Type	Reset	Description
15-8	RESERVED	R	0h	Any writes to these bit(s) must always have a value of 0.
7-0	WINDOWCNT	R	0h	Blanking Window Counter. Valid value: 0-FFh These 8 bits are read only and indicate the current value of the window counter. The counter counts down to zero and then stops until it is re-loaded when the offset counter reaches zero again.

11.4.3 CANFD

This chapter describes the Modular Controller Area Network (MCAN) module.

11.4.3.1 MCAN Overview 3517
11.4.3.2 MCAN Environment 3520
11.4.3.3 MCAN Integration 3522
11.4.3.4 MCAN Functional Description 3524
11.4.3.5 MCAN Register Manual 3559

Copyright © 2025 Texas Instruments Incorporated

11.4.3.1 MCAN Overview

The Controller Area Network (CAN) is a serial communications protocol which efficiently supports distributed real-time control with a high level of security. CAN has high immunity to electrical interference and the ability to self-diagnose and repair data errors. In a CAN network, many short messages are broadcast to the entire network, which provides for data consistency in every node of the system.

The MCAN modules support both classic CAN and CAN FD (CAN with Flexible Data-Rate) specifications. CAN FD feature allows high throughput and increased payload per data frame. The classic CAN and CAN FD devices can coexist on the same network without any conflict.

The device supports up to two MCAN modules connecting to the CAN network through external (for the device) transceiver for connection to the physical layer. Each MCAN module supports up to 5 Mbit/s data rate and is compliant to ISO 11898-1:2015.

Note

The availabilty of CAN FD feature is device part number dependent. Refer to device Data Manual for more information.

shows the MCAN module overview.

Copyright © 2025 Texas Instruments Incorporated

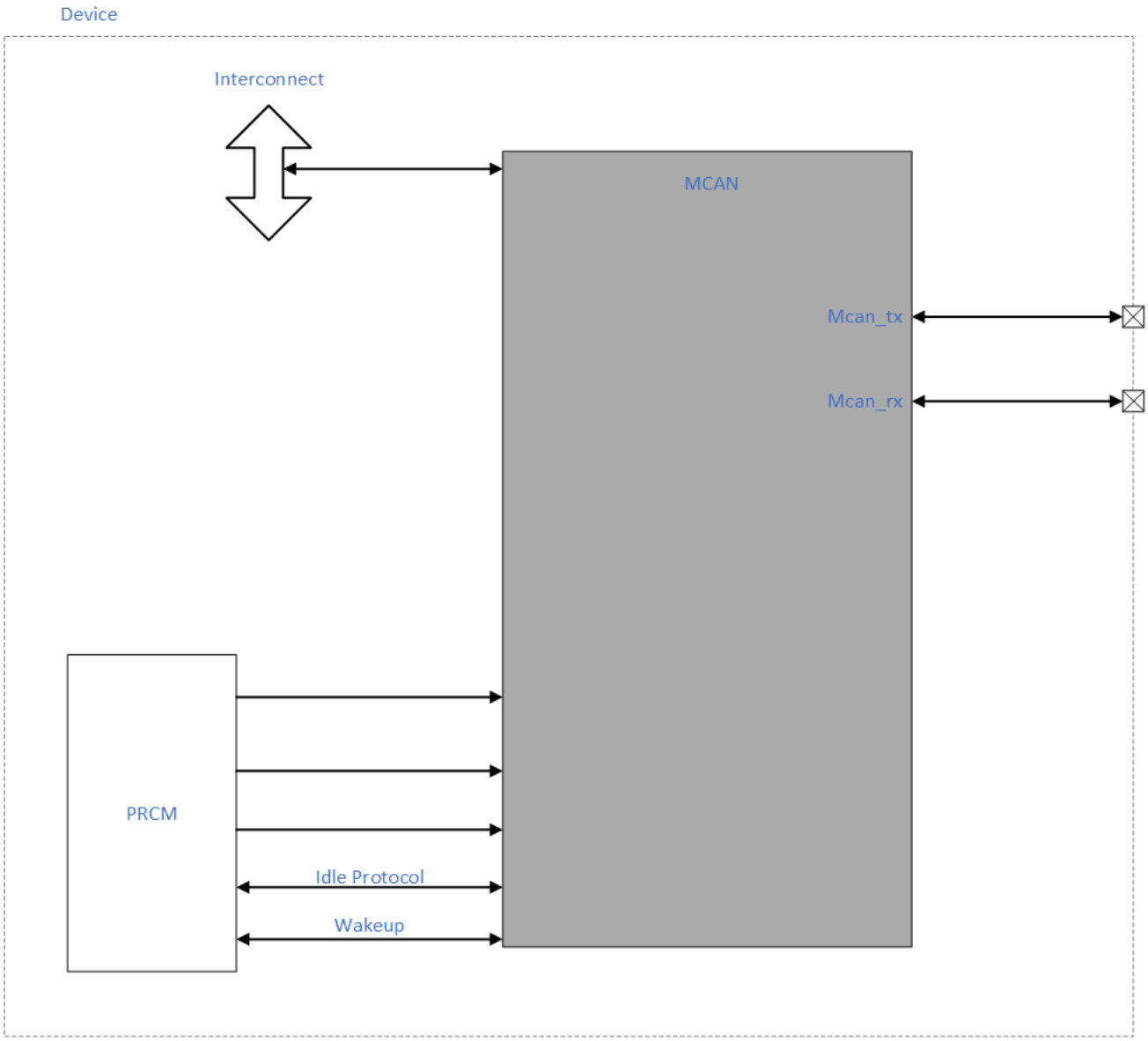

Figure 11-304. MCAN Module Overview

11.4.3.1.1 Features

Each MCAN module implements the following features:

- Conforms with ISO 11898-1:2015
- Full CAN FD support (up to 64 data bytes)
- AUTOSAR and SAE J1939 support
- Up to 32 dedicated Transmit Buffers
- Configurable Transmit FIFO, up to 32 elements
- Configurable Transmit Queue, up to 32 elements
- Configurable Transmit Event FIFO, up to 32 elements
- Up to 64 dedicated Receive Buffers
- Two configurable Receive FIFOs, up to 64 elements each
- Up to 128 filter elements
- Internal Loopback mode for self-test
- Maskable interrupts, two interrupt lines

Copyright © 2025 Texas Instruments Incorporated

- Two clock domains (CAN clock/Host clock)
- Parity/ECC support - Message RAM single error correction and double error detection (SECDED) mechanism
- Local power-down and wakeup support
- Timestamp Counter
- Full Message Memory capacity (4352 words).

Not supported features:

- Debug on CAN (Debug DMA)
- Host bus read and write bursts
- Host bus firewall
- GPIO mode
- External (IO) Loopback mode
- Device clock domains monitoring (using DCC module)

Copyright © 2025 Texas Instruments Incorporated

11.4.3.2 MCAN Environment

A CAN network physical layer consists of two-wire differential bus, usually twisted pair, and provides high level of interference immunity. External CAN transceiver IC is needed to access a CAN bus by the MCAN.

Figure 11-305 shows an overview of a typical MCAN application.

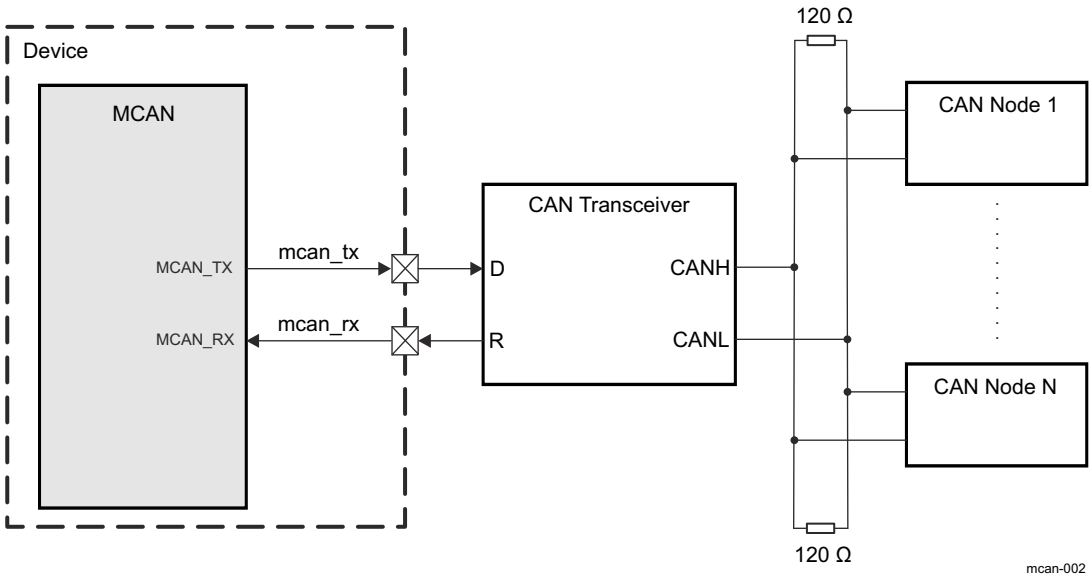

Figure 11-305. MCAN Typical Application

Table 11-1218 describes the external signals of the MCAN module.

Table 11-1218. MCAN I/O Description

Module Signal	Device Signal	I/O(1)	Description	Value at Reset
MCAN_RX	mcan_rx	I	Serial data input from external CAN tranceiver	HiZ
MCAN_TX	mcan_tx	O	Serial data output to external CAN tranceiver	1

(1) I = Input; O = Output

Note

The path from a module pin to device pad(s) is defined at the device I/O logic level. The control module registers assign the specific function to the device pads. For more information on control module settings, see *Pad Configuration Registers* of *Control Module*.

11.4.3.2.1 CAN Network Basics

- A CAN bus is a 2-wire differential bus using Non-Return-to-Zero (NRZ) encoding and has two states:
  - Recessive state (logical 1)
  - Dominant state (logical 0)
- The network is multicontroller. When two or more nodes (ECUs) attempt to transmit at the same time, a non-destructive arbitration technique guarantees messages are sent in order of priority and no messages are lost.
- The message transmission is multicast. Data messages transmitted are identifier based, not address based.
- Content of message is labeled by the identifier that is unique throughout the network (for example: rpm, temperature, position, pressure, and so forth).
- All nodes on network receive the message and each performs an acceptance test on the identifier. If message is relevant, it is processed, otherwise it is ignored.

Copyright © 2025 Texas Instruments Incorporated

- The unique identifier also determines the priority of the message (the lower the numerical value of the identifier, the higher the priority is).
- Data is transmitted and received using message frames, consisting of the following basic fields:
  - Arbitration field
  - Control field
  - Data field (up to 8 bytes for Classical CAN and up to 64 bytes for CAN FD)
  - CRC field
  - ACK field

For more information, see *ISO 11898-1:2015: CAN data link layer and physical signalling*.

Copyright © 2025 Texas Instruments Incorporated

11.4.3.3 MCAN Integration

MCAN Integration shows the integration of the MCAN module in the device.

Figure 11-306. MCAN Integration

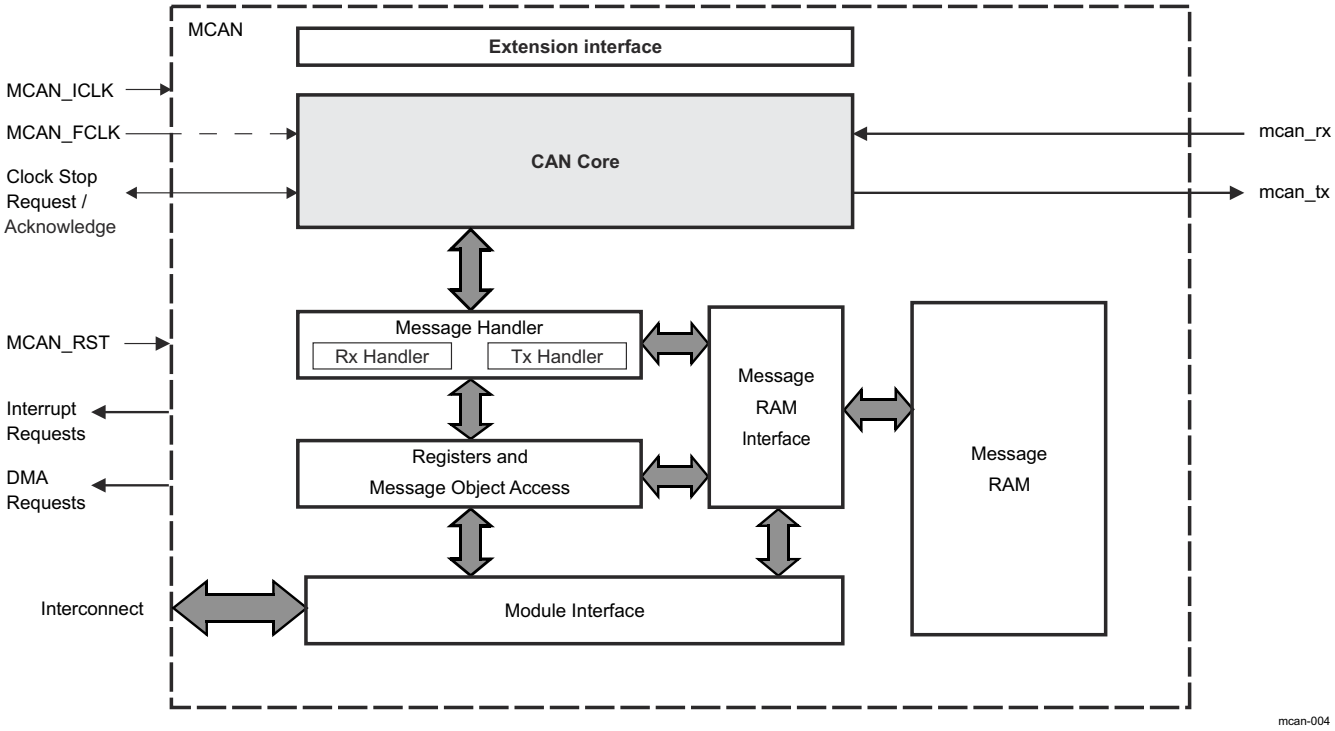

Table 11-1219 through Table 11-1221 summarize the integration of the MCAN module in the device.

Table 11-1219. MCAN Integration Attributes

Module Instance	Attributes		
	Power Domain	Wake-Up Capability	Interconnect
MCAN	PD_L4PER	Yes	L4_PER2

Table 11-1220. MCAN Clocks and Resets

Clocks				
Module Instance	**Destination Signal Name**	**Source Signal Name**	**Source**	**Description**
MCAN	MCAN_ICLK	L4PER2_L3_GICLK/2	PRCM	Interface clock for the MCAN module
	MCAN_FCLK	MCAN_CLK	PRCM	Functional clock for the MCAN core
Resets				
Module Instance	**Destination Signal Name**	**Source Signal Name**	**Source**	**Description**
MCAN	MCAN_RST	L4PER_RST	PRCM	Asynchronous reset signal to the MCAN module

Table 11-1221. MCAN Hardware Requests

DMA Requests				
Module Instance	**Source Signal Name**	**DMA_CROSSBAR Input**	**Default Mapping**	**Description**
MCAN	MCAN_DREQ_TX	DMA_CROSSBAR_161	-	MCAN TX DMA Event
	MCAN_DREQ_RX_FE1	DMA_CROSSBAR_162	-	MCAN RX Filter Event 1
	MCAN_DREQ_RX_FE2	DMA_CROSSBAR_163	-	MCAN RX Filter Event 2

Copyright © 2025 Texas Instruments Incorporated

Note

For more information about the DMA_CROSSBAR module, see *DMA_CROSSBAR Module Functional Description* in *Control Module*.

Note

For the description of the interrupt source, see Section 11.4.3.4.2, *Interrupt and DMA Requests*.

Copyright © 2025 Texas Instruments Incorporated

11.4.3.4 MCAN Functional Description

Each MCAN module performs CAN protocol communication according to ISO 11898-1:2015. The bit rate can be programmed to values up to 5 Mbit/s. Additional transceiver hardware is required for the connection to the physical layer (CAN bus).

For communication on a CAN network, individual message frames can be configured. The message frames and identifier masks are stored in the Message RAM.

All functions concerning the handling of messages are implemented in the Message Handler.

The register set of each MCAN module can be accessed directly via the module interface. These registers are used to control and configure the CAN core and the Message Handler, and to access the Message RAM.

Figure 11-307 shows a CAN module block diagram.

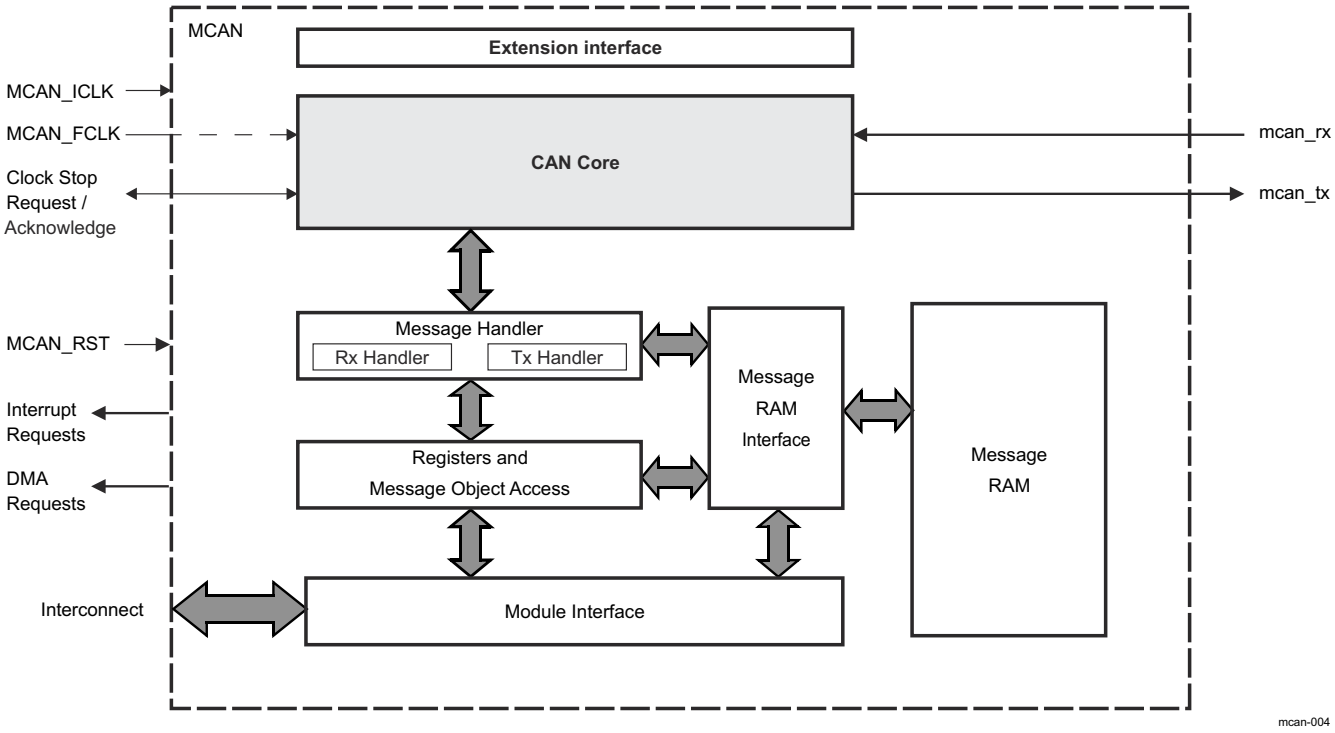

Figure 11-307. MCAN Block Diagram

The MCAN module blocks description:

- **CAN Core**: The CAN core consists of the CAN protocol controller and the Rx/Tx shift register. It handles all ISO 11898-1:2015 protocol functions and supports 11-bit and 29-bit identifiers.
- **Message Handler**: the Message Handler (Rx Handler and Tx Handler) is a state machine that controls the data transfer between the single-ported Message RAM and the CAN core's Rx/Tx shift register. It also handles the acceptance filtering and the Interrupt/DMA request generation as programmed in the control registers.
- **Message RAM**: the main purpose of the Message RAM is to store Rx/Tx messages, Tx Event elements, and Message ID Filter elements (for more information, see Section 11.4.3.4.11, *Message RAM*).
- **Message RAM Interface**: enables connection between the Message RAM and the other blocks in the MCAN module.
- **Registers and Message Object Access**: Data consistency is ensured by indirect accesses to the message objects. During normal operation, all software and DMA accesses to the Message RAM are done through interface registers. The interface registers have the same word-length as the Message RAM.
- **Module Interface**: The MCAN module registers are accessed by the user software through a 32-bit peripheral bus interface.

Copyright © 2025 Texas Instruments Incorporated

- **Clocking**: Two clocks are provided to the MCAN module: the peripheral synchronous clock (interface clock - MCAN_ICLK) and the peripheral asynchronous clock (functional clock - MCAN_FCLK).
- **Extension Interface**: All flags from the Interrupt Register (MCAN_IR) as well as selected internal status and control signals are routed to this interface.

11.4.3.4.1 Module Clocking Requirements

Two clocks are provided to each MCAN module:

- the peripheral synchronous clock (MCAN_ICLK) as the general module clock source
- and the peripheral asynchronous clock (MCAN_FCLK) provided to the CAN core for generating the CAN bit timing.

Within each MCAN module there is a synchronization mechanism implemented to ensure safe data transfer between the two clock domains. There are synchronization between the signals from the Host clock domain to the CAN clock domain and vice versa and between the reset signal (MCAN_RST) to the Host clock domain and to the CAN clock domain.

Note

MCAN_ICLK must always be higher or equal to MCAN_FCLK, in order to achieve a stable functionality of the MCAN module. Here, also the frequency shift of the modulated MCAN_ICLK has to be considered:

$f_{0,ICLK}(OCP) \pm \Delta f_{FM,ICLK}(OCP) \geq f_{FCLK}$

CAN-FD supports higher speeds of operation and as such has more stringent timing requirements than Classic CAN. For optimal performance, TI recommends using the lowest N-divider value that maintains a working PLL REF_CLK (GMAC_DSP_DPLL_CLK) for the system. Lower N-divider values increase the loop bandwidth of the PLL which in turn improves timing margins for CAN-FD.

For CAN-FD operations > 2 Mbps:

- For 20 MHz input clocks, N = 0 is the preferred configuration.

For CAN-FD operations < 2 Mbps:

- For 20 MHz input clocks, N = 0 is the preferred configuration.
- For 19.2 MHz input clocks, N = 11 is the preferred configuration.

For more information on how to configure the relevant clock source registers, see *PRCM* and the device data manual.

11.4.3.4.2 Interrupt and DMA Requests

Each MCAN module provides interrupt and DMA requests. They are configured via the Host CPU. The Suspend Mode prevents the interrupt and DMA requests from propagating to the Host CPU (for more information, see Section 11.4.3.4.4.8.2, *Suspend Mode*).

11.4.3.4.2.1 Interrupt Requests

Each MCAN module has two interrupt lines. The first interrupt line (INT0) is associated with the MCAN core. There are 30 internal interrupt sources. The interrupts are 'level high' interrupts.

For more information, see the following registers:

- Interrupt Register (MCAN_IR)
- Interrupt Enable (MCAN_IE)
- Interrupt Line Select (MCAN_ILS)
- Interrupt Line Enable (MCAN_ILE)

Each MCAN module is capable of issuing an ECC interrupt. After clearing the ECC interrupt source, the application software must also write 1 to MCANSS_ECC_EOI[8] ECC_EOI bit (for more information, see Section 11.4.3.4.7.2, *ECC Aggregator*).

Copyright © 2025 Texas Instruments Incorporated

The second interrupt line (INT1) is associated with the External Timestamp Counter. When the External Timestamp Counter rolls over it produces an interrupt (see Section 11.4.3.4.5.1, *External Timestamp Counter*).

For more information, see the following registers:

- Interrupt Clear Shadow Register (MCANSS_ICS)
- Interrupt Raw Status Register (MCANSS_IRS)
- Interrupt Enable Clear Shadow Register (MCANSS_IECS)
- Interrupt Enable Register (MCANSS_IE)
- Interrupt Enable Status (MCANSS_IES)
- End Of Interrupt (MCANSS_EOI)
- External Timestamp Prescaler (MCANSS_EXT_TS_PRESCALER)
- External Timestamp Unserviced Interrupts Counter (MCANSS_EXT_TS_UNSERVICED_INTR_CNTR)

11.4.3.4.2.2 DMA Requests

Functional transmit and Filter DMA requests are generated by each MCAN module based on the signaling in the Extention Interface. The DMA signaling uses a simple DMA request active high pulse. Only one Tx DMA event is provided by each MCAN module.

Standard and Extended message filters can be set to issue a pulse when a filter match occurs. These "Filter Events" can be used to DMA messages from the Rx FIFO. The events are high level single clock cycle (MCAN_ICLK) pulses. Only two Filter DMA events are provided by the MCAN module.

For more information about available Interrupt and DMA Requests, see Section 11.4.3.3, *MCAN Integration*.

11.4.3.4.2.3

For more information about available Interrupt and DMA Requests, see Section 11.4.3.3, *MCAN Integration*.

11.4.3.4.3 Fuseable CAN FD Operation Enable

The Flexible Datarate feature of each MCAN module can be enabled by writing 1 to MCAN_CCCR[8] FDOE bit. A value of 0 on the primary configuration port (mcanss_enable_fdoe) will force the MCAN_CCCR[8] FDOE bit during write to the MCAN_CCCR register which will prevent the device from enabling and using the CAN FD mode.

11.4.3.4.4 Operating Modes

11.4.3.4.4.1 Software Initialization

Setting the MCAN_CCCR[0] INIT bit to 1 starts a software initialization. This is done either by software or by a hardware reset, when an uncorrected bit error was detected in the Message RAM, or by going Bus_Off state. While the MCAN_CCCR[0] INIT bit is set, the message transfer is stopped and the status of the output MCAN_TX pin is recessive (high). The counters of the Error Management Logic (EML) are unchanged. Setting the MCAN_CCCR[0] INIT bit does not change any configuration register. Resetting the MCAN_CCCR[0] INIT bit finishes the software initialization. After waiting for the occurrence of a sequence of 11 consecutive recessive bits (indication for Bus_Idle state) the message transfer starts.

Access to the MCAN configuration registers is only enabled when both MCAN_CCCR[0] INIT and MCAN_CCCR[1] CCE bits are set (write protection).

The MCAN_CCCR[1] CCE bit can only be set/reset while the MCAN_CCCR[0] INIT = 1. The MCAN_CCCR[1] CCE bit is automatically reset when the MCAN_CCCR[0] INIT bit is reset.

The following registers are reset when the MCAN_CCCR[1] CCE bit is set:

- MCAN_HPMS - High Priority Message Status
- MCAN_RXF0S - Rx FIFO 0 Status
- MCAN_RXF1S - Rx FIFO 1 Status
- MCAN_TXFQS - Tx FIFO/Queue Status
- MCAN_TXBRP - Tx Buffer Request Pending
- MCAN_TXBTO - Tx Buffer Transmission Occurred

Copyright © 2025 Texas Instruments Incorporated

- MCAN_TXBCF - Tx Buffer Cancellation Finished
- MCAN_TXEFS - Tx Event FIFO Status

The Timeout Counter value MCAN_TOCV[15:0] TOC field is preset to the value configured by the MCAN_TOCC[31:16] TOP field when the MCAN_CCCR[1] CCE bit is set.

In addition the Tx Handler and Rx Handler are held in idle state while MCAN_CCCR[1] CCE = 1.

The following registers are only writeable while MCAN_CCCR[1] CCE = 0

- MCAN_TXBAR - Tx Buffer Add Request
- MCAN_TXBCR - Tx Buffer Cancellation Request

MCAN_CCCR[7] TEST and MCAN_CCCR[5] MON bits can only be set by the Host CPU while MCAN_CCCR[0] INIT = 1 and MCAN_CCCR[1] CCE = 1. Both bits may be reset at any time. The MCAN_CCCR[6] DAR bit can only be set/reset while MCAN_CCCR[0] INIT = 1 and MCAN_CCCR[1] CCE = 1.

11.4.3.4.4.2 Normal Operation

Once an MCAN module is initialized and the MCAN_CCCR[0] INIT bit is reset to zero, the MCAN module synchronizes itself to the CAN bus and is ready for communication. After passing the acceptance filtering, received messages including Message Identifier (ID) and Data Length Code (DLC) are stored into a dedicated Rx Buffer or into Rx FIFO 0/Rx FIFO 1.

For messages to be transmitted dedicated Tx Buffers and/or a Tx FIFO or a Tx Queue can be initialized or updated.

Note

Automated transmission on reception of remote frames is not supported.

11.4.3.4.4.3 CAN FD Operation

There are two variants of CAN FD frame transmission:

- CAN FD frame transmission without bit rate switching
- CAN FD frame transmission where control field, data field, and CRC field are transmitted with a higher bit rate than the beginning and the end of the frame

In the CAN frames FDF = recessive (logical 1) signifies a CAN FD frame, FDF = dominant (logical 0) signifies a Classic CAN frame. In a CAN FD frame, the two bits following FDF - res and BRS, decide whether the bit rate inside of this CAN FD frame is switched. A CAN FD bit rate switch is signified by res = dominant and BRS = recessive. Note that the coding of res = recessive is reserved for future expansion of the protocol. In case the MCAN module receives a frame with FDF = recessive and res = recessive, it will signal a Protocol Exception Event by setting the MCAN_PSR[14] EXE bit. When Protocol Exception Handling is enabled (MCAN_CCCR[12] PXHD = 0), this causes the operation state to change from Receiver (MCAN_PSR[4:3] ACT = 10) to Integrating (MCAN_PSR[4:3] ACT = 00) at the next sample point. In case Protocol Exception Handling is disabled (MCAN_CCCR[12] PXHD = 1), the MCAN will treat a recessive res bit as an form error and will respond with an error frame.

CAN FD operation is enabled by programming the MCAN_CCCR[8] FDOE bit. In case MCAN_CCCR[8] FDOE = 1, transmission and reception of CAN FD frames is enabled. Transmission and reception of Classic CAN frames is always possible. Whether a CAN FD frame or a Classic CAN frame is transmitted can be configured via the FDF bit in the respective Tx Buffer element.

With MCAN_CCCR[8] FDOE = 0, received frames are interpreted as Classic CAN frames, which leads to the transmission of an error frame when receiving a CAN FD frame. When CAN FD operation is disabled, no CAN FD frames are transmitted even if the FDF bit of a Tx Buffer element is set. The MCAN_CCCR[8] FDOE and MCAN_CCCR[9] BRSE bits can only be changed while the MCAN_CCCR[0] INIT and MCAN_CCCR[1] CCE bits are both set. With MCAN_CCCR[8] FDOE = 0, the setting of bits FDF and BRS is ignored and frames are transmitted in Classic CAN format.

Copyright © 2025 Texas Instruments Incorporated

With MCAN_CCCR[8] FDOE = 1 and MCAN_CCCR[9] BRSE = 0, only FDF bit of a Tx Buffer element is evaluated. With MCAN_CCCR[8] FDOE = 1 and MCAN_CCCR[9] BRSE = 1, transmission of CAN FD frames with bit rate switching is enabled. All Tx Buffer elements with bits FDF and BRS set are transmitted in CAN FD format with bit rate switching.

A mode change during CAN operation is only recommended under the following conditions:

- The failure rate in the CAN FD data phase is significant higher than in the CAN FD arbitration phase. In this case disable the CAN FD bit rate switching option for transmissions.
- During system startup all nodes are transmitting Classic CAN messages until it is verified that they are able to communicate in CAN FD format. If this is true, all nodes switch to CAN FD operation.
- Wakeup messages in CAN Partial Networking have to be transmitted in Classic CAN format.
- End-of-line programming in case not all nodes are CAN FD capable. Non CAN FD nodes are held in Silent mode until programming has completed. Then all nodes switch back to Classic CAN communication.

In the CAN FD format, the DLC coding differs from the standard CAN format (see Table 11-1222).

Table 11-1222. DLC Coding

DLC	0	1	2	3	4	5	6	7	8	9	10	11	12	13	14	15
Number of Data Bytes in Standard CAN	0	1	2	3	4	5	6	7	8	8	8	8	8	8	8	8
Number of Data Bytes in CAN FD	0	1	2	3	4	5	6	7	8	12	16	20	24	32	48	64

For CAN FD frames with bit rate switching, the bit timing will be switched inside the frame after the BRS (Bit Rate Switch) bit in case this bit is recessive. In the CAN FD arbitration phase, before the BRS bit, the nominal CAN bit timing (see Figure 11-308) is used as configured by the Nominal Bit Timing and Prescaler Register, MCAN_NBTP. In the following CAN FD data phase, the data phase bit timing is used as configured by the Data Bit Timing and Prescaler Register, MCAN_DBTP. The bit timing is switched back from the data phase timing at the CRC delimiter or when an error is detected, whichever occurs first.

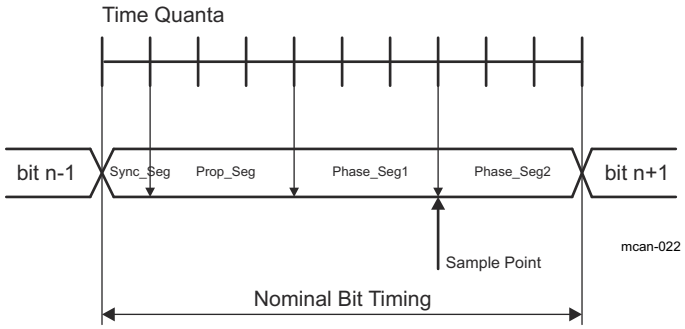

Figure 11-308. CAN Bit Timing

The maximum configurable data phase bit timing depends on the CAN clock frequency (MCAN_FCLK). Example: with MCAN_FCLK = 20 MHz and the shortest configurable bit time of 4 t_q (time quanta), the bit rate in the data phase is 5 Mbit/s.

For CAN FD with or without bit rate switching, the value of the ESI (Error Status Indicator) bit depends on the transmitter's error state (see MCAN_PSR[11] RESI bit) monitored at the start of the transmission. If the transmitter has an error passive flag, the ESI bit is transmitted recessive. Otherwise, it is transmitted dominant.

11.4.3.4.4.4 Transmitter Delay Compensation

11.4.3.4.4.4.1 Description

When only one CAN FD node is transmitting and all others are receivers the length of the bus line has no impact. When transmitting via the MCAN_TX pin, the MCAN module receives the transmitted data from its local

Copyright © 2025 Texas Instruments Incorporated

CAN transceiver via the MCAN_RX pin. The received data is delayed. If the transmitter delay is greater than TSEG1 (time segment before sample point), a bit error is detected.

The MCAN module provides a delay compensation mechanism to compensate the transmitter delay. The compensation mechanism enables transmission with higher bit rates during the CAN FD data phase independent of the delay of a specific CAN transceiver. Without transmitter delay compensation, the bit rate in the data phase is limited by the transmitter delay.

The mechanism enables configurations where the data bit time is shorter than the transmitter delay (described in detail in ISO 11898-1:2015). The transmitter delay compensation is enabled by setting the MCAN_DBTP[23] TDC bit to 1.

The delayed transmit data is compared against the received data at the Secondary Sample Point (SSP) in order to check for bit errors during the data phase of transmitting nodes. If a bit error is detected, the transmitter will react on this bit error at the next following regular sample point. During the arbitration phase, the delay compensation is always disabled.

The received bit is compared against the transmitted bit at the SSP. The SSP position is defined as the sum of the measured delay from the MCAN's transmit output MCAN_TX pin through the transceiver to the receive input MCAN_RX pin plus the transmitter delay compensation offset configured by the MCAN_TDCR[14:8] TDCO field (see Figure 11-309). The transmitter delay compensation offset is used to adjust the position of the SSP inside the received bit (example: half of the bit time in the data phase). The position of the SSP is rounded down to the next integer number of mtq (minimum time quantum).

The actual transmitter delay compensation value can be checked by reading the MCAN_PSR[22:16] TDCV field. This filed is cleared when the MCAN_CCCR[0] INIT bit is set and is updated at each transmission of CAN FD frame while the MCAN_DBTP[23] TDC bit is set.

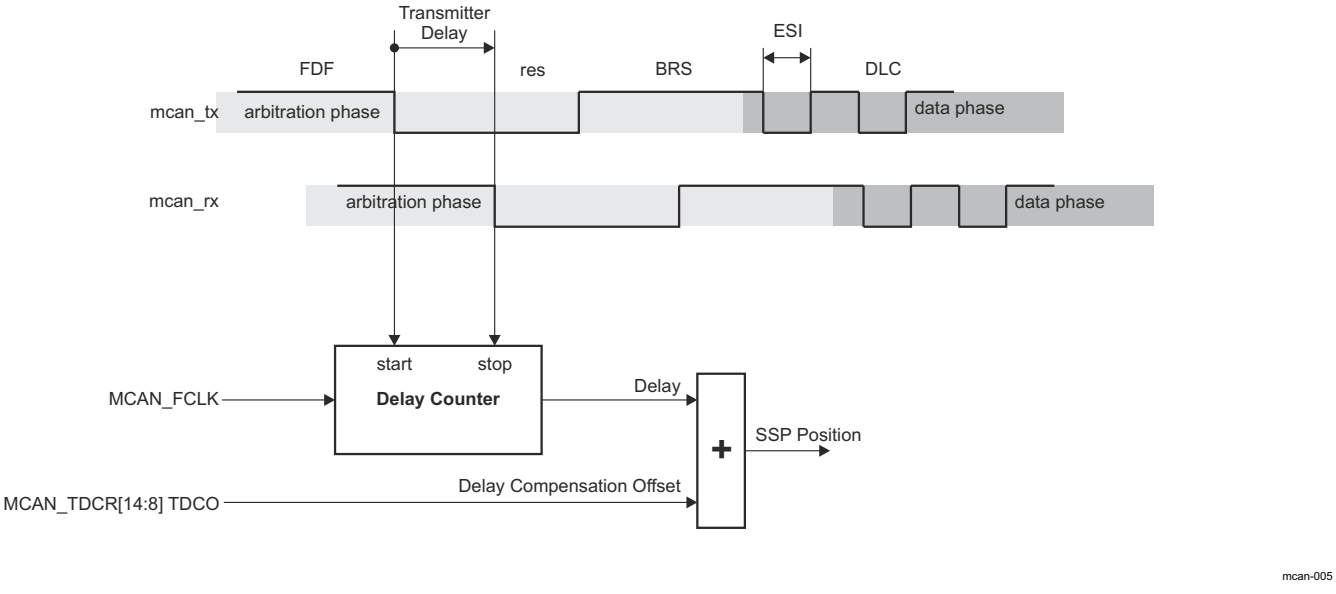

Figure 11-309. Transmitter Delay Measurement

11.4.3.4.4.4.2 Transmitter Delay Compensation Measurement

When transmitter delay compensation is enabled (by programming MCAN_DBTP[23] TDC = 1), the measurement is started within each transmitted CAN FD frame at the falling edge of FDF bit to bit res. The measurement is stopped when this edge is seen at the receive input MCAN_RX pin of the transmitter. The resolution of this measurement is one mtq (see Figure 11-309). The mtq (minimum time quantum) dimension is equal to the CAN clock period (MCAN_FCLK).

Copyright © 2025 Texas Instruments Incorporated

The use of a transmitter delay compensation filter window can be enabled by programming MCAN_TDCR[6:0] TDCF field. This filter feature defines a minimum value for the SSP position to avoid the case in which a dominant glitch inside the received FDF bit ends the delay compensation measurement before the falling edge of the received res bit, resulting in an early taken SSP position. Dominant edges on the MCAN_RX pin that would result in an earlier SSP position are ignored for transmitter delay measurement. The measurement is stopped when the SSP position is at least MCAN_TDCR[6:0] TDCF field and the MCAN_RX pin is low.

The following boundary conditions have to be considered:

- The sum of the measured delay from the MCAN_TX pin to the MCAN_RX pin and the configured transmitter delay compensation offset (MCAN_TDCR[14:8] TDCO field) has to be less than 6 bit times in the data phase.
- The sum of the measured delay from the MCAN_TX pin to the MCAN_RX pin and the configured transmitter delay compensation offset (MCAN_TDCR[14:8] TDCO) field has to be less or equal 127 mtq. In case this sum exceeds 127 mtq, the maximum value of 127 mtq is used for transmitter delay compensation.
- The data phase ends at the sample point of the CRC delimiter, that stops checking of receive bits at the SSPs.

11.4.3.4.4.5 Restricted Operation Mode

In Restricted Operation Mode, the CAN node is able to receive data and remote frames and acknowledge valid frames, but it does not send data frames, remote frames, active error frames, or overload frames. In case of an error condition or overload condition, it does not send dominant bits, instead it waits for the occurrence of bus idle condition to resynchronize itself to the CAN communication. The receive and transmit error counters (MCAN_ECR[14:8] REC and MCAN_ECR[7:0] TEC) are frozen while CAN error logging (MCAN_ECR[23:16] CEL) is active. The Host CPU can set the MCAN module into Restricted Operation Mode by setting MCAN_CCCR[2] ASM bit. The bit can only be set by the Host CPU at any time when both MCAN_CCCR[2] CCE and MCAN_CCCR[1] INIT bits are set to 1.

The Restricted Operation Mode is automatically entered when the Tx Handler is not able to read data from the Message RAM in time. To leave Restricted Operation Mode, the Host CPU has to reset MCAN_CCCR[2] ASM bit. This mode can be used in applications that adapt themselves to different CAN bit rates. In this case, the application tests different bit rates and leaves the Restricted Operation Mode after it has received a valid frame.

Note

The Restricted Operation Mode must not be combined with the Loop Back Mode.

11.4.3.4.4.6 Bus Monitoring Mode

Entering Bus Monitoring Mode is done by setting the MCAN_CCCR[5] MON bit to 1. In this mode (see ISO 11898-1:2015, *Bus Monitoring* section), the MCAN module is able to receive valid data and remote frames but cannot start a transmission. The MCAN module sends only recessive bits on the CAN bus. If the MCAN module is required to send a dominant bit (ACK bit, overload flag, active error flag), the bit is rerouted internally so that the MCAN module monitors this dominant bit, although the CAN bus may remain in recessive state. In Bus Monitoring Mode, the MCAN_TXBRP register is held in reset state. The Bus Monitoring Mode can be used to analyze the traffic on a CAN bus without affecting it by the transmission of dominant bits. Figure 11-310 shows the connection of the MCAN_TX and MCAN_RX signals to the MCAN module in Bus Monitoring Mode.

Copyright © 2025 Texas Instruments Incorporated

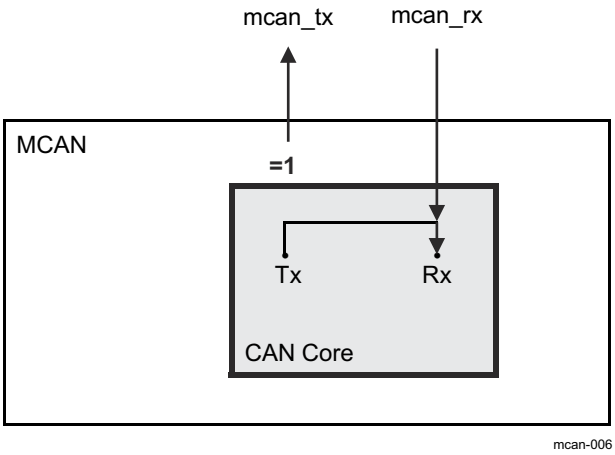

Figure 11-310. Connection of Signals in Bus Monitoring Mode

11.4.3.4.4.7 Disabled Automatic Retransmission (DAR) Mode

According to the CAN Specification (see ISO11898-1:2015, *Recovery Management* section), the MCAN module provides means for automatic retransmission of frames that have lost arbitration or that have been disturbed by errors during transmission. By default, automatic retransmission is enabled (see the MCAN_CCCR[6] DAR bit).

11.4.3.4.4.7.1 Frame Transmission in DAR Mode

In DAR mode, all transmissions are automatically cancelled after they started on the CAN bus. A Tx Buffer's Tx Request Pending MCAN_TXBRP TRPx bit is reset after successful transmission, when a transmission has not yet been started at the point of cancellation, has been aborted due to lost arbitration, or when an error occurred during frame transmission.

Successful transmission:

- Corresponding Tx Buffer Transmission Occurred MCAN_TXBTO TOx bit is set
- Corresponding Tx Buffer Cancellation Finished MCAN_TXBCF CFx bit is not set

Successful transmission in spite of cancellation:

- Corresponding Tx Buffer Transmission Occurred MCAN_TXBTO TOx bit is set
- Corresponding Tx Buffer Cancellation Finished MCAN_TXBCF CFx bit is set

Arbitration lost or frame transmission disturbed:

- Corresponding Tx Buffer Transmission Occurred MCAN_TXBTO TOx bit is not set
- Corresponding Tx Buffer Cancellation Finished MCAN_TXBCF CFx bit is set

In case of a successful frame transmission, and if storage of Tx events is enabled, a Tx Event FIFO element is written with Event Type ET = 10 (transmission in spite of cancellation).

11.4.3.4.4.8 Power Down (Sleep) Mode

Entering Power Down mode is controlled via the input clock stop request signal (mcanss_clkstp_clkstop_req) or MCAN_CCCR[4] CSR bit. As long as the clock stop request signal is active, the MCAN_CCCR[4] CSR bit is read as 1. When all pending transmission requests have completed, the MCAN module waits until bus idle state is detected. Then the MCAN module sets the MCAN_CCCR[1] INIT to 1 to prevent any further CAN transfers. The MCAN module acknowledges that it is ready for power down by setting the output clock stop acknowledge signal (mcanss_clkstop_clkstop_ack) to 1 and the MCAN_CCCR[3] CSA bit to 1. In this state, before the clocks are switched off, further register accesses can be made except to the MCAN_CCCR[1] INIT bit which is held at one. Now, the module clock inputs MCAN_ICLK and MCAN_FCLK may be switched off.

To leave power down mode, the application has to turn on the module clocks before resetting the input clock stop request signal respectively the MCAN_CCCR[4] CSR flag bit. The MCAN will acknowledge this by

Copyright © 2025 Texas Instruments Incorporated

resetting the output clock stop acknowledge signal respectively the MCAN_CCCR[3] CSA flag bit. Afterwards, the application can restart CAN communication by resetting MCAN_CCCR[1] INIT bit.

11.4.3.4.4.8.1 External Clock Stop Mode

The MCAN module supports two external clock stop modes:

- Immediate
- Graceful

In graceful clock stop mode, when the clock stop request is asserted, the MCAN core will respond with clock stop acknowledge when all pending Tx messages have been processed and an Idle line had been detected. The MCAN_CCCR[0] INIT bit will be set, the MCAN core will go and stay Idle.

The automatic wakeup feature is enabled by setting the MCANSS_CTRL[5] AUTOWAKEUP and MCANSS_CTRL[4] WAKEUPREQEN bits to 1 (for more information, see Section 11.4.3.4.4.8.3, *Wakeup request*). When external clock stop request is removed and no suspend request is active, a read-modify-write to the MCAN_CCCR[0] INIT bit is performed to clear it.

11.4.3.4.4.8.2 Suspend Mode

The MCAN module supports two suspend modes:

- Immediate
- Graceful

In graceful suspend mode (see the MCANSS_CTRL[3] FREE and MCANSS_CTRL[2] SOFT bits), when the suspend request is asserted, a clock stop request to the MCAN core is performed. The MCAN core will respond with clock stop acknowledge when all pending Tx messages have been processed and an Idle line had been detected. At that point, the MCAN_CCCR[0] INIT bit will be set, the MCAN core will go and stay Idle. The suspend state can be verified by reading MCAN_CCCR[0] INIT bit.

The automatic wakeup feature is enabled by setting the MCANSS_CTRL[5] AUTOWAKEUP and MCANSS_CTRL[4] WAKEUPREQEN bits to 1 (for more information, see Section 11.4.3.4.4.8.3, *Wakeup request*). When suspend request is removed, if no external clock stop request is active, a read-modify-write to the MCAN_CCCR[0] INIT bit is performed to clear it.

During suspend mode, the auto-clear feature is disabled. The following register fields have an auto-clear feature:

- MCAN_ECR[23:16] CEL
- MCAN_PSR[2:0] LEC
- MCAN_PSR[10:8] DLEC
- MCAN_PSR[11] RESI
- MCAN_PSR[12] RBRS
- MCAN_PSR[13] RFDF
- MCAN_PSR[14] PXE

11.4.3.4.4.8.3 Wakeup Request

Issuing a clock stop request puts the MCAN module into Power Down mode (Sleep Mode). During transition from IDLE to ACTIVE, if the MCANSS_CTRL[5] AUTOWAKEUP and MCANSS_CTRL[4] WAKEUPREQEN bits are enabled, after the MCAN Core respond to the removal of the clock stop request with removing the clock stop acknowledge, a read-modify-write will be issued to clear the MCAN_CCCR[0] INIT bit and the MCAN core will resume operation.

If the MCANSS_CTRL[4] WAKEUPREQEN bit is set, the MCAN module provides a wakeup request (SWakeup) on any of the following wakeup events:

- The receive MCAN_RX pin is dominant (logical 0)
- OCP access is performed

Copyright © 2025 Texas Instruments Incorporated

To clear the SWakeup in case any of these events is active, the MCANSS_CTRL[4] WAKEUPREQEN bit should be cleared. The MCAN module adds a third wakeup event source - interrupt line 0 (INT0). In this case the SWakeup is cleared by clearing the interrupt source.

11.4.3.4.4.9 Test Mode

The MCAN_TEST register write access is enabled by setting the test mode enable MCAN_CCCR[7] TEST bit to 1. The MCAN_TEST register allows the configuration of the test modes and test functions.

The CAN transmit MCAN_TX pin has four output functions. One of those functions can be selected by programming the MCAN_TEST[6:5] TX filed. Additionally to its default function (the serial data output) it can drive the CAN Sample Point signal to monitor the MCAN's bit timing and it can drive constant dominant or recessive values.

The actual value of the CAN receive MCAN_RX pin can be monitored from MCAN_TEST[7] RX bit. Both functions can be used to check the CAN bus physical layer. Due to the synchronization mechanism between CAN clock (MCAN_FCLK) and Host clock (MCAN_ICLK) domain, there may be a delay of several Host clock periods between writing to the MCAN_TEST[6:5] TX filed until the new configuration is visible at the output MCAN_TX pin. This applies also when reading input MCAN_RX pin via the MCAN_TEST[7] RX bit.

Note

Test modes should be used for self test only. The software control for MCAN_TX pin interferes with all CAN protocol functions. It is not recommended to use test modes for application.

11.4.3.4.4.9.1 Internal Loop Back Mode

The MCAN module can be set into Internal Loop Back Mode by programming MCAN_TEST[4] LBCK and MCAN_CCCR[5] MON bits to 1. The Internal Loop Back Mode is used for a 'Hot Selftest'. The 'Hot Selftest' allows the MCAN module to be tested without affecting a running CAN system connected to the MCAN_TX and MCAN_RX pins. In this mode MCAN_RX pin is disconnected from the MCAN module and MCAN_TX pin is held recessive. Figure 11-311 shows the connection of the MCAN_TX and MCAN_RX pins to the MCAN module in case of Internal Loop Back Mode.

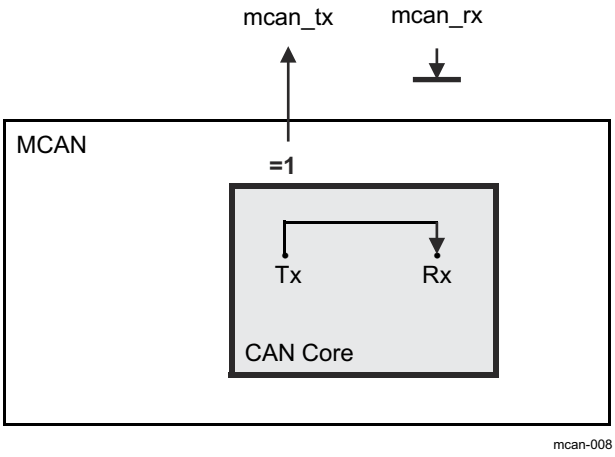

Figure 11-311. Internal Loop Back Mode

11.4.3.4.5 Timestamp Generation

The MCAN module has integrated a 16-bit wrap-around counter for timestamp generation. The timestamp counter prescaler MCAN_TSCC[19:16] TCP field can be configured to clock the counter in multiples of CAN bit times (1-16). The counter is readable via the MCAN_TSCV[15:0] TSC field. A write access to the MCAN_TSCV register resets the counter to zero. When the timestamp counter wraps around the interrupt MCAN_IR[16] TSW flag is set. On start of a frame reception/transmission the counter value is captured and stored into the

Copyright © 2025 Texas Instruments Incorporated

timestamp section of an Rx Buffer/Rx FIFO (RXTS[15:0]) or Tx Event FIFO (TXTS[15:0]) element. For more information, see Section 11.4.3.4.11, *Message RAM*.

11.4.3.4.5.1 External Timestamp Counter

For CAN FD operation mode the MCAN core requires an External Timestamp Counter. An externally generated 16-bit vector may substitute the integrated 16-bit CAN bit time counter (internal timestamp counter) for receive and transmit timestamp generation. An external 16-bit timestamp counter can be used by programming the MCAN_TSCC[1:0] TSS field.

The External Timestamp Counter uses the interface clock (MCAN_ICLK) as a reference clock. The MCAN Core accepts a 16-bit timestamp. A 24-bit prescaler provides a programmable resolution for the timestamp (see MCANSS_EXT_TS_PRESCALER[23:0] PRESCALER field). When disabled the counter is reset back to zero. While enabled the counter keeps incrementing. When the timestamp rolls over the MCAN_IRQ_TS interrupt is generated. The MCAN module provides both pulse and level interrupt type for this interrupt.

When the timestamp rolls over the MCANSS_IRS register is set (see Figure 11-312). The MCANSS_IE register can be affected by writing to the MCAN_IESS register to set or to the MCANSS_IECS register to clear. The level interrupt is a reflection of both MCANSS_IRS and MCANSS_IE being set. The MCANSS_IES register reflects the level interrupt. When an rollover event occurs the interrupt counter is incremented. Writing to the MCANSS_ICS register to clear the MCANSS_IRS register will also decrement the interrupt counter. Writing to the MCANSS_EOI register will issue another pulse if the interrupt counter is not zero.

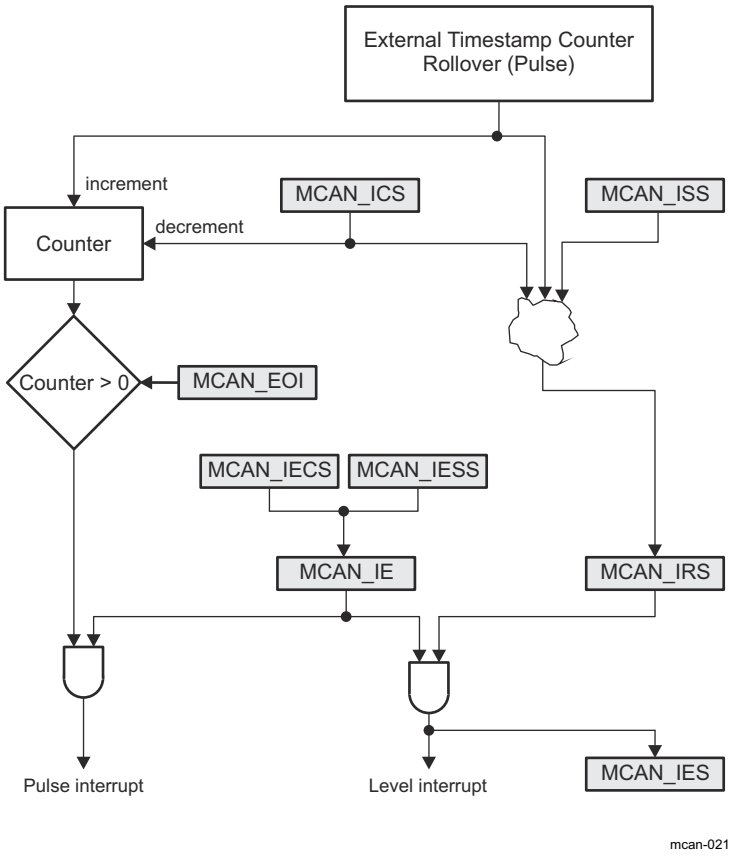

Figure 11-312. External Timestamp Counter Interrupt

11.4.3.4.6 Timeout Counter

The MCAN module has integrated a 16-bit Timeout Counter. It is used to signal timeout conditions for the Rx FIFO 0, Rx FIFO 1, and Tx Event FIFO Message RAM elements. The Timeout Counter is configured via the MCAN_TOCC register. It is enabled via the MCAN_TOCC[0] ETOC bit. The Timeout Counter operates

Copyright © 2025 Texas Instruments Incorporated

as down-counter and uses the same prescaler programmed by the MCAN_TSCC[19:16] TCP field as the Timestamp Counter. The actual counter value can be monitored from the MCAN_TOCV[15:0] TOC field. The Timeout Counter can be started only when MCAN_CCCR[1] INIT = 0 and stopped when MCAN_CCCR[1] INIT = 1 (example: when the MCAN enters Bus_Off state). The operation mode is selected by the MCAN_TOCC[2:1] TOS field. When Continuous Mode is selected, the counter starts when MCAN_CCCR[1] INIT = 0, a write to the MCAN_TOCV register presets the counter to the value configured by the MCAN_TOCC[31:16] TOP field and continues down-counting.

In case the Timeout Counter is controlled by one of the FIFOs, an empty FIFO presets the counter to the value configured by the MCAN_TOCC[31:16] TOP field. Down-counting is started when the first FIFO element is stored. Writing to the MCAN_TOCV register has no effect. When the counter reaches zero, the interrupt MCAN_IR[18] TOO flag is set.

In Continuous Mode, the counter is immediately restarted at the value configured by the MCAN_TOCC[31:16] TOP field.

11.4.3.4.7 Safety

The Message Memory is wrapped in an ECC wrapper provididing SECDED parity functionalilty. The ECC wrapper is controlled by an ECC Aggregator.

11.4.3.4.7.1 ECC Wrapper

The ECC wrapper provides Single Error Correction (SEC) and Double Error Detection (DED) parity to the Message Memory content. It has side band signals for error notification. The ECC Wrapper implements an error injection test mode.

The error correction is done using a lazy write back. When an error is detected, it is noted in a FIFO Queue which waits for an access gap to write the data back and refresh the memory. If a transaction writes new data to the compromised entry before the lazy write back completes, the write back is discarded.

11.4.3.4.7.2 ECC Aggregator

This section describes the functional details of the ECC Aggregator module.

11.4.3.4.7.2.1 ECC Aggregator Overview

The ECC Aggregator module supports the following general features:

- Provides a mechanism to control and monitor the ECC RAM in the MCAN module.
- Provides software access to all the ECC related registers.
- Supports software readable status of ECC single/double-bit errors and associated info such as RAM address and data bit(s) that are in error.
- Aggregates level pending status from the ECC RAM into a single interrupt to the Host CPU.

The following feature is not supported:

- Statistics such as tracking the number of single and double-bit errors. If needed, these operations can be handled by software.

11.4.3.4.7.2.2 ECC Aggregator Registers

There are 3 groups of registers in the ECC aggregator module:

- Global registers - Aggregator Revision Register (MCANSS_ECC_AGGR_REVISION), ECC Vector Register (MCANSS_ECC_VECTOR), Misc Status Register (MCANSS_ECC_MISC_STATUS), ECC Control Register (MCANSS_ECC_CONTROL), and ECC Wrapper Revision Register (MCANSS_ECC_WRAP_REVISION).
- Control and status registers - ECC Error Control Registers (MCANSS_ECC_ERR_CTRL1 and MCANSS_ECC_ERR_CTRL2) and ECC Error Status Registers (MCANSS_ECC_ERR_STAT1 and MCANSS_ECC_ERR_STAT2).
- Interrupt registers - interrupt status, interrupt enable set, interrupt enable clear and EOI (End Of Interrupt) registers that are part of a standard interrupt module. For more information, see the following registers:
  - MCANSS_ECC_SEC_EOI_REG

Copyright © 2025 Texas Instruments Incorporated

- MCANSS_ECC_SEC_STATUS_REG0
- MCANSS_ECC_SEC_ENABLE_SET_REG0
- MCANSS_ECC_SEC_ENABLE_CLR_REG0
- MCANSS_ECC_DED_EOI_REG
- MCANSS_ECC_DED_STATUS_REG0
- MCANSS_ECC_DED_ENABLE_SET_REG0
- MCANSS_ECC_DED_ENABLE_CLR_REG0

11.4.3.4.7.2.3 Reads to ECC Control and Status Registers

The reads to the ECC control and status registers are triggered by writing a 'read message' to the ECC Vector Register as described below:

- Software writes value (the ECC RAM ID) to the MCANSS_ECC_VECTOR[10-0] ECC_VECTOR field to select the ECC RAM for control or status.
- Software writes 1 to the MCANSS_ECC_VECTOR[15] RD_SVBUS bit to trigger a read.
- Software writes read address to the MCANSS_ECC_VECTOR[23-16] RD_SVBUS_ADDRESS field.
- Software then polls the MCANSS_ECC_VECTOR[24] RD_SVBUS_DONE bit to check if it is 1. This bit indicates that the read operation has completed.
- Software reads the data from the ECC control or status register. The following clock cycle (MCAN_ICLK) returns the read data.

11.4.3.4.7.2.4 ECC Interrupts

The ECC aggregator module aggregates the level pending status from the ECC RAM into a single EOI-handshake based interrupt to the Host CPU. Software is expected to follow the sequence described below:

- Software enables the interrupts for the ECC RAM by writing to the MCANSS_ECC_SEC_ENABLE_SET_REG0/MCANSS_ECC_DED_ENABLE_SET_REG0 register.
- Software writes the ECC RAM ID in the MCANSS_ECC_VECTOR[10-0] ECC_VECTOR.
- Software writes the MCANSS_ECC_VECTOR[15] RD_SVBUS bit to trigger the read.
- Software writes the MCANSS_ECC_ERR_STAT1 register address to the MCANSS_ECC_VECTOR[23-16] RD_SVBUS_ADDRESS field. Software will need to load the 'read message' in the MCANSS_ECC_VECTOR register again if it needs to read the MCANSS_ECC_ERR_STAT2 register.
- Software polls the MCANSS_ECC_VECTOR[24] RD_SVBUS_DONE bit. When this bit is set, a read of the MCANSS_ECC_ERR_STAT1/MCANSS_ECC_ERR_STAT2 register is performed.
- After the interrupt has been serviced, software will clear the interrupt status by writing to the MCANSS_ECC_ERR_STAT1[8] CLR_ECC_SEC or MCANSS_ECC_ERR_STAT1[9] CLR_ECC_DED bit depending on the type of the ECC error.
- Software has to poll the MCANSS_ECC_ERR_STAT1 register to guarantee that the status bit has been cleared.
- Software will write to the MCANSS_ECC_SEC_EOI_REG/MCANSS_ECC_DED_EOI_REG register to clear the interrupt.
- After clearing the ECC interrupt source, the application software must also write 1 to the MCANSS_ECC_EOI[8] ECC_EOI bit.

11.4.3.4.8 Rx Handling

The Rx Handler controls the following operations:

- Acceptance filtering
- The transfer of received messages to the Rx Buffers or to one of the two Rx FIFOs (Rx FIFO 0 or Rx FIFO 1)
- Rx FIFO Put and Get Index operations

11.4.3.4.8.1 Acceptance Filtering

The MCAN module is capable to configure two sets of acceptance filters - one set for standard and one set for extended identifiers. These filters can be assigned to an Rx Buffer or to one of the two Rx FIFOs.

The main features of the filter elements are:

Copyright © 2025 Texas Instruments Incorporated

- Each filter element can be configured as:
  - Range Filter (from - to)
  - Filter for specific IDs (for one or two dedicated IDs)
  - Classic Bit Mask Filter
- Each filter element can be enabled/disabled individually
- Each filter element can be configured for acceptance or rejection filtering
- Filters are checked sequentially and execution (acceptance filtering procedure) stops at the first matching filter element or when the end of the filter list is reached

Related configuration registers are:

- Global Filter Configuration (MCAN_GFC) register
- Standard ID Filter Configuration (MCAN_SIDFC) register
- Extended ID Filter Configuration (MCAN_XIDFC) register
- Extended ID AND Mask (MCAN_XIDAM) register

Depending on the configuration of the filter element (see SFEC/EFEC in Section 11.4.3.4.11, *Message RAM*) if filter matches, one of the following actions is performed:

- Received frame is stored in FIFO 0 or FIFO 1
- Received frame is stored in Rx Buffer
- Received frame is stored in Rx Buffer and generation of pulse at filter event pin is performed. This is high level single MCAN_ICLK pulse. For more information, see Section 11.4.3.4.2.1, *DMA Requests*.
- Received frame is rejected
- Set High Priority Message interrupt flag MCAN_IR[8] HPM
- Set High Priority Message interrupt flag MCAN_IR[8] HPM and store received frame in FIFO 0 or FIFO 1

Acceptance filtering starts when complete Message ID is received. Acceptance filtering stops at the first matching enabled filter element or when the end of the filter list is reached. If a filter element matches - the Rx Handler starts writing the received message data in portions of 32 bit to the matching Rx Buffer or Rx FIFO. If an error condition occurs (for example: CRC error), this message is rejected with the following impact on the affected Rx Buffer or Rx FIFO:

- Rx Buffer:
  New Data flag (MCAN_NDAT1/MCAN_NDAT2) of matching Rx Buffer is not set, but Rx Buffer (partly) overwritten with received data (for error type see MCAN_PSR[2:0] LEC respectively MCAN_PSR[10:8] DLEC fields).
- Rx FIFO:
  Put index of matching Rx FIFO is not updated, but related Rx FIFO element (partly) overwritten with received data (for error type see MCAN_PSR[2:0] LEC respectively MCAN_PSR[10:8] DLEC fields). If matching Rx FIFO is configured to operate in overwrite mode, the boundary conditions described in Section 11.4.3.4.8.2.2 have to be considered.

11.4.3.4.8.1.1 Range Filter

Each filter element can be configured to operate as Range Filter (Standard Filter Type SFT = 00/Extended Filter Type EFT = 00). The filter matches for all received message frames with IDs in the range from SFID1 to SFID2 (SFID2 ≥ SFID1) respectively in the range from EFID1 to EFID2 (EFID2 ≥ EFID1). For more information see Section 11.4.3.4.11.5, *Standard Message ID Filter Element* and Section 11.4.3.4.11.6, *Extended Message ID Filter Element*.

There are two options for range filtering of extended frames:

- Extended Filter Type EFT = 00: The Extended ID AND Mask (MCAN_XIDAM) is used for Range Filtering. The Message ID of received frames is ANDed with the Extended ID AND Mask (MCAN_XIDAM) before the range filter is applied.
- Extended Filter Type EFT = 11: The Extended ID AND Mask (MCAN_XIDAM) is not used for Range Filtering.

Copyright © 2025 Texas Instruments Incorporated

11.4.3.4.8.1.2 Filter for specific IDs

Each filter element can be configured to filter one or two dedicated Message IDs (Standard Filter Type SFT =01/ Extended Filter Type EFT =01). To filter only one specific Message ID, the filter element has to be configured with SFID1 = SFID2 respectively EFID1 = EFID2. For more information see Section 11.4.3.4.11.5, *Standard Message ID Filter Element* and Section 11.4.3.4.11.6, *Extended Message ID Filter Element*.

11.4.3.4.8.1.3 Classic Bit Mask Filter

Classic bit mask filtering can filter groups of Message IDs (Standard Filter Type SFT =10/Extended Filter Type EFT =10). This is done by masking single bits of a received Message ID. In this case SFID1/EFID1 element is used as Message ID filter, while SFID2/EFID2 element is used as filter mask.

A 0 bit at the filter mask (SFID2/EFID2) will mask out the corresponding bit position of the configured Message ID filter (SFID1/EFID1) and the value of the received Message ID at that bit position is not relevant for acceptance filtering. Only those bits of the received Message ID where the corresponding mask bits are 1 are relevant for acceptance filtering.

There are two interesting cases:

- All mask bits are 1: a match occurs only when the received Message ID and the configured Message ID filter are identical.
- All mask bits are 0: all Message IDs match.

11.4.3.4.8.1.4 Standard Message ID Filtering

The standard Message ID (11-bit ID) filtering flow is shown in Figure 11-313. Section 11.4.3.4.11.5, *Standard Message ID Filter Element* describes the standard Message ID filter element.

The Remote Transmission Request (RTR) and Extended Identifier (XTD) bits of the received frames are compared against the list of configured filter elements. This is controlled by the following registers:

- Global Filter Configuration (MCAN_GFC) register
- Standard ID Filter Configuration (MCAN_SIDFC) register

Copyright © 2025 Texas Instruments Incorporated

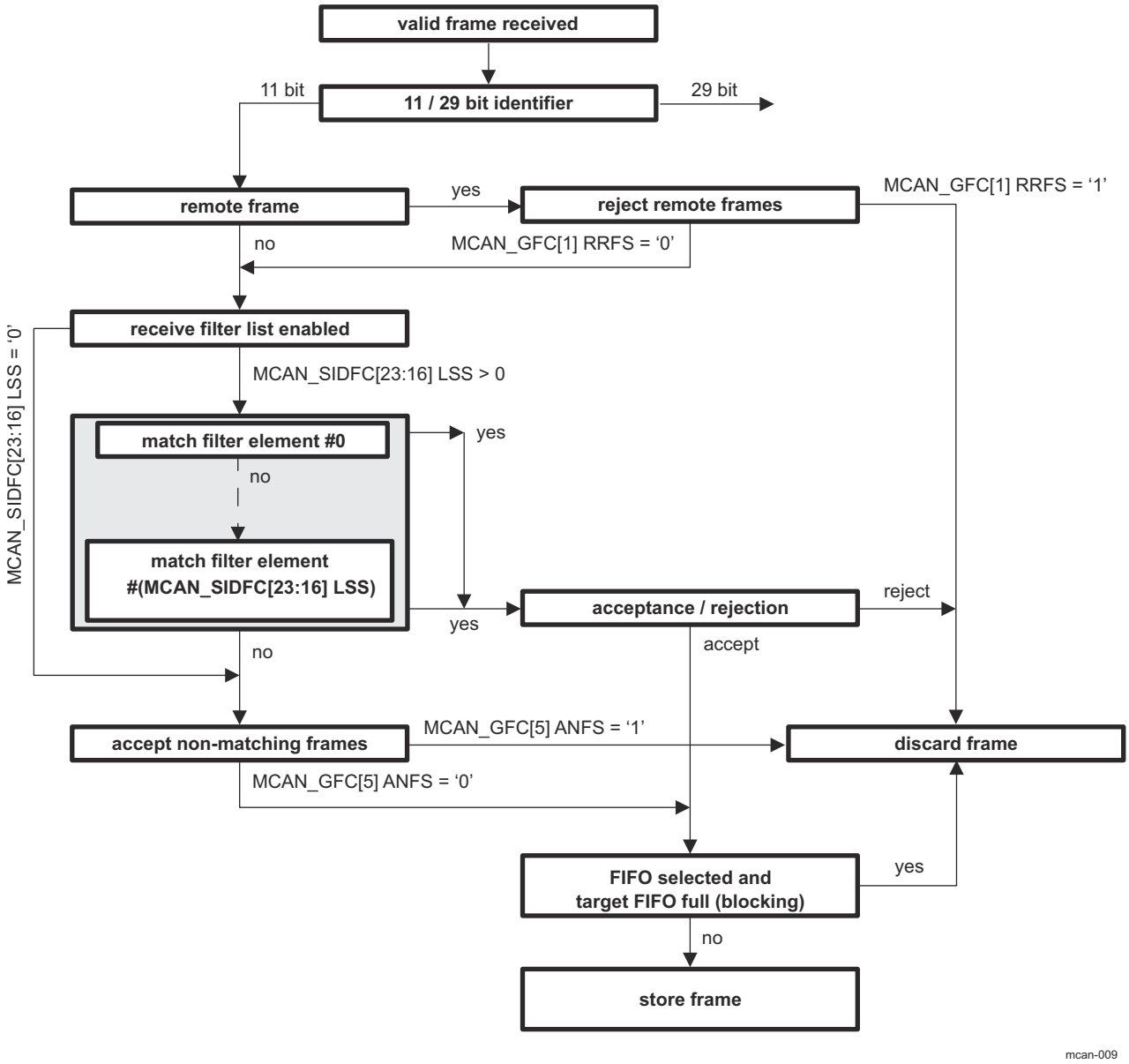

Figure 11-313. Standard Message ID Filter Path

11.4.3.4.8.1.5 Extended Message ID Filtering

The extended Message ID (29-bit ID) filtering flow is shown in Figure 11-314. Section 11.4.3.4.11.6, *Extended Message ID Filter Element* describes the extended Message ID filter element.

The Remote Transmission Request (RTR) and Extended Identifier (XTD) bits of the received frames are compared against the list of configured filter elements. This is controlled by the following registers:

- Global Filter Configuration (MCAN_GFC) register
- Extended ID Filter Configuration (MCAN_XIDFC) register

Note that before the filter list is executed the received identifier is ANDed with the Extended ID AND Mask (MCAN_XIDAM).

Copyright © 2025 Texas Instruments Incorporated

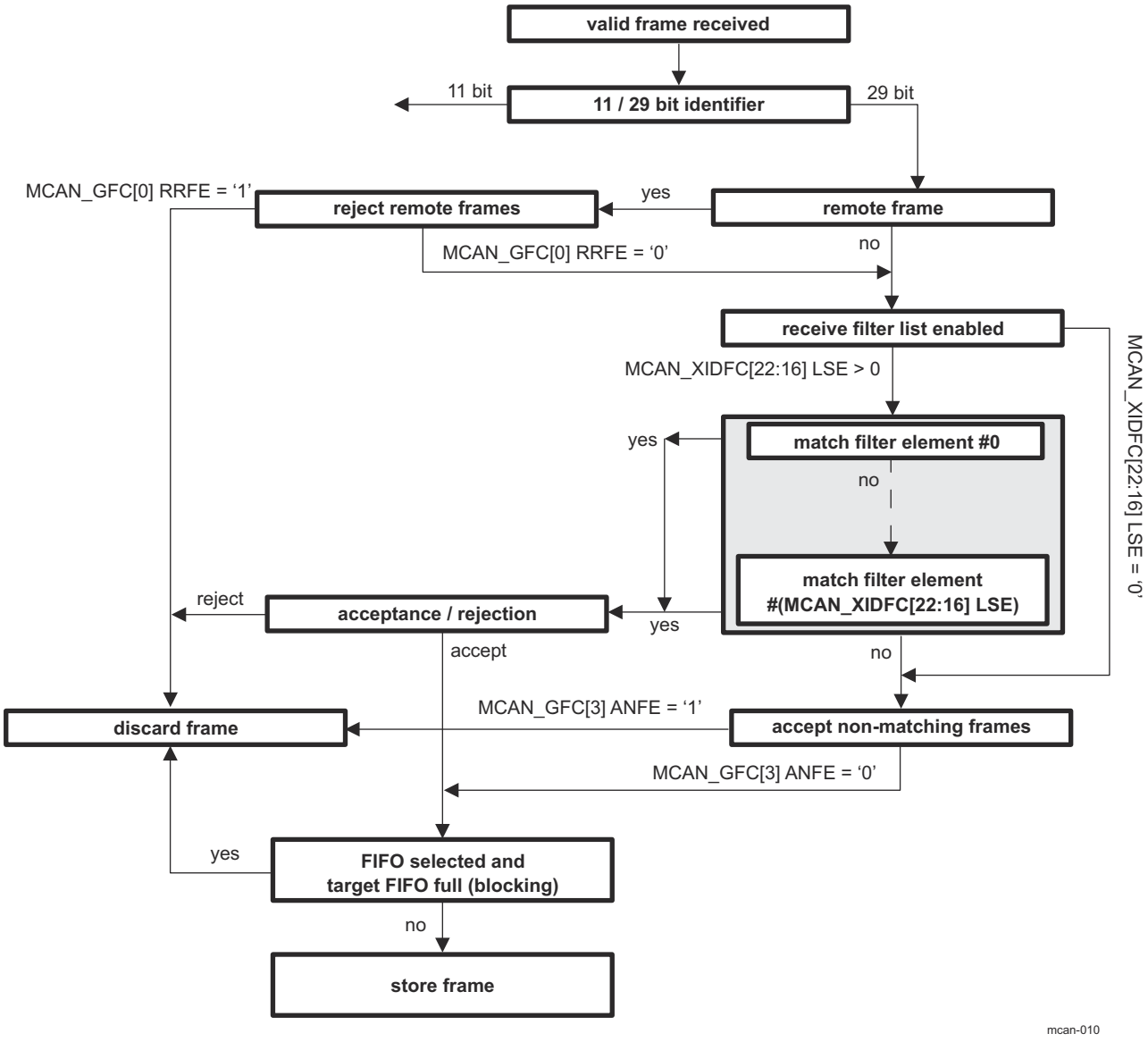

Figure 11-314. Extended Message ID Filter Path

11.4.3.4.8.2 Rx FIFOs

The configuration of the Rx FIFOs (Rx FIFO 0 and Rx FIFO 1) can be done via the MCAN_RXF0C and MCAN_RXF1C registers. Each Rx FIFO can be configured to store up to 64 received messages.

After acceptance filtering the received messages that passed are transferred to the Rx FIFO. The filter mechanisms available for the Rx FIFO 0 and Rx FIFO 1 is described in Section 11.4.3.4.8.1, *Acceptance Filtering*. Section 11.4.3.4.11.2, *Rx Buffer and FIFO Element* describes the Rx FIFO element.

The Rx FIFO watermark can be used to prevent an Rx FIFO overflow. If the Rx FIFO fill level reaches the Rx FIFO watermark configured by the MCAN_RXFnC[30:24] FnWM filed (where: n = 0 or 1) an interrupt flag MCAN_IR[1] RF0W/MCAN_IR[5] RF1W is set.

When the Rx FIFO Put Index reaches the Rx FIFO Get Index (MCAN_RXFnS[21:16] FnPI = MCAN_RXFnS[13:8] FnGI) an Rx FIFO Full condition is signalled by the MCAN_RXFnS[24] FnF status bit and interrupt flag MCAN_IR[2] RF0F/MCAN_IR[6] RF1F is set. Figure 11-315 shows Rx FIFO Status. The FIFOs fill level is presented in the MCAN_RXFnS[6:0] FnFL field (the number of elements stored in Rx FIFO).

Copyright © 2025 Texas Instruments Incorporated

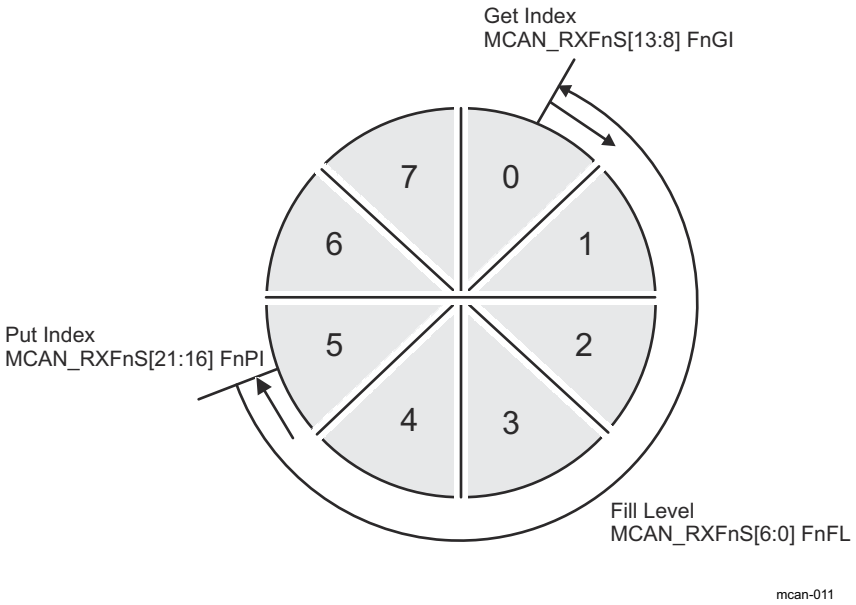

Figure 11-315. Rx FIFO Status

Rx FIFOs start address in the Message RAM (MCAN_RXFnC[15:2]FnSA field) have to be configured when reading from an Rx FIFO (Rx FIFO Get Index - MCAN_RXFnS[13:8] FnGI). Table 11-1223 presents Rx Buffer/Rx FIFO Element Size for different Rx Buffer / Rx FIFO Data Field Size which is configured via the MCAN_RXESC register.

Table 11-1223. Rx Buffer/Rx FIFO Element Size

MCAN_RXESC[10:8] RBDS MCAN_RXESC[2:0] F0DS/ MCAN_RXESC[6:4] F1DS	Data Field [bytes]	FIFO Element Size [RAM words]
000	8	4
001	12	5
010	16	6
011	20	7
100	24	8
101	32	10
110	48	14
111	64	18

11.4.3.4.8.2.1 Rx FIFO Blocking Mode

The Rx FIFO blocking mode is the default operation mode for the Rx FIFOs. It is configured by the MCAN_RXFnC[31] FnOM = 0.

If an Rx FIFO full condition is reached (MCAN_RXFnS[21:16] FnPI = MCAN_RXFnS[13:8] FnGI), no further messages are written to the corresponding Rx FIFO until at least one message has been read out and the Rx FIFO Get Index has been incremented. An Rx FIFO full condition is signalled by the MCAN_RXFnS[24] FnF = 1 and interrupt flag MCAN_IR[2] RF0F/MCAN_IR[6] RF1F is set.

In case a message is received while the corresponding Rx FIFO is full, this message is rejected and the message lost condition is signalled by MCAN_RXFnS[25] RFnL = 1 and interrupt flag MCAN_IR[3] RFnL/ MCAN_IR[25] RFnL is set.

Copyright © 2025 Texas Instruments Incorporated

11.4.3.4.8.2.2 Rx FIFO Overwrite Mode

The Rx FIFO overwrite mode is configured by the MCAN_RXFnC[31] FnOM = 1. When an Rx FIFO full condition is reached (MCAN_RXFnS[21:16] FnPI = MCAN_RXFnS[13:8] FnGI) signalled by MCAN_RXFnS[24] FnF = 1, the next accepted message for the FIFO will overwrite the oldest FIFO message. Put index/Get index are both incremented by one.

In overwrite mode if an Rx FIFO full condition is signalled, reading of the Rx FIFO elements should start at least at get index + 1. The reason for that is, that it might happen, that a received message is written to the Message RAM (Put index) while the Host CPU is reading from the Message RAM (Get index). In this case inconsistent data may be read from the respective Rx FIFO element. The problem is solved by adding an offset to the Get index when reading from the Rx FIFO. The offset depends on how fast the Host CPU accesses the Rx FIFO. Figure 11-316 shows an offset of two with respect to the Get index when reading the Rx FIFO. In this case the two messages stored in element 1 and 2 are lost.

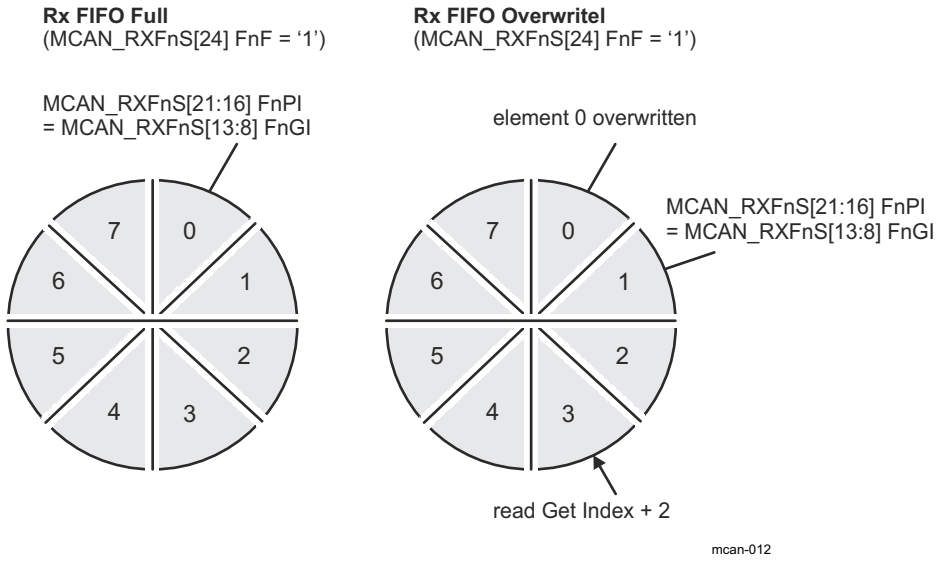

Figure 11-316. Rx FIFO Overflow Handling

After reading from the Rx FIFO, the number of the last element read has to be written to the Rx FIFO Acknowledge Index MCAN_RXFnA[5:0] FnAI. This increments the get index to that element number. In case the Put index has not been incremented to this Rx FIFO element, the Rx FIFO full condition is reset (MCAN_RXFnS[24] FnF = 0).

11.4.3.4.8.3 Dedicated Rx Buffers

The MCAN supports up to 64 dedicated Rx Buffers. The start address of the Rx Buffers section in the Message RAM is configured via MCAN_RXBC[15:2] RBSA field. To store in an Rx Buffer a Standard or Extended Message ID Filter Element with SFEC/EFEC = 111 and SFID2/EFID2[10:9] = 00 has to be configured (see Section 11.4.3.4.11.5, *Standard Message ID Filter Element* and Section 11.4.3.4.11.6, *Extended Message ID Filter Element*).

After a received message has been accepted by a filter element, the message is stored into the Rx Buffer in the Message RAM referenced by the filter element (the format is the same as for an Rx FIFO element). In addition the flag MCAN_IR[19] DRX (Message stored in Dedicated Rx Buffer) is set.

Table 11-1224 shows Example Filter Configuration for Rx Buffers.

Table 11-1224. Example Filter Configuration for Rx Buffers

Filter Element	SFID1[10:0] EFID1[28:0]	SFID2[10:9] EFID2[10:9]	SFID2[5:0] EFID2[5:0]
0	ID message 1	00	00 0000

Copyright © 2025 Texas Instruments Incorporated

Table 11-1224. Example Filter Configuration for Rx Buffers (continued)

Filter Element	SFID1[10:0] EFID1[28:0]	SFID2[10:9] EFID2[10:9]	SFID2[5:0] EFID2[5:0]
1	ID message 2	00	00 0001
2	ID message 3	00	00 0010

After the last word of a matching received message has been written to the Message RAM, the respective New Data flag in register MCAN_NDAT1/MCAN_NDAT2 is set. As long as the New Data flag is set, the respective Rx Buffer is locked against updates from received matching frames. The New Data flags have to be reset by the Host CPU by writing a 1 to the respective bit position.

While an Rx Buffer's New Data flag is set, a Message ID Filter Element referencing this specific Rx Buffer will not match, causing the acceptance filtering to continue. Following Message ID Filter Elements may cause the received message to be stored into another Rx Buffer, or into an Rx FIFO, or the message may be rejected, depending on filter configuration.

11.4.3.4.8.3.1 Rx Buffer Handling

Rx Buffer Handling include the following steps:

- Reset interrupt flag MCAN_IR[19] DRX
- Read New Data registers
- Read messages from Message RAM
- Reset New Data flags of processed messages

11.4.3.4.9 Tx Handling

The Tx Handler is used to handle the Tx requests. It controls the transfer of transmit messages from the dedicated Tx Buffers, the Tx FIFO, and the Tx Queue to the CAN Core, the Tx Event FIFO, and the Put and Get Index operations. The MCAN module supports up to 32 Tx Buffers. These Tx Buffers can be configured as dedicated Tx Buffers, Tx FIFO, or Tx Queue and as combination of dedicated Tx Buffers/Tx FIFO or dedicated Tx Buffers/Tx Queue. For each Tx Buffer element Classical CAN or CAN FD transmission mode can be configured. Section 11.4.3.4.11.3 describes the Tx Buffer Element. Table 11-1225 shows the possible configurations for message transmission.

Table 11-1225. Possible Configurations for Message Transmission

MCAN_CCCR		Tx Buffer Element		Frame Transmission
MCAN_CCCR[9] BRSE	MCAN_CCCR[8] FDOE	FDF	BRS	
ignored	0	ignored	ignored	Classic CAN
0	1	0	ignored	Classic CAN
0	1	1	ignored	CAN FD without bit rate switching
1	1	0	ignored	Classic CAN
1	1	1	0	CAN FD without bit rate switching
1	1	1	1	CAN FD with bit rate switching

When the Tx Buffer Request Pending MCAN_TXBRP register is updated, or when a transmission has been started the Tx Handler starts scanning to check for the highest priority pending Tx request. The Tx Buffer with lowest Message ID has highest priority.

Note

AUTOSAR requires at least three Tx Queue Buffers and support of transmit cancellation.

Copyright © 2025 Texas Instruments Incorporated

11.4.3.4.9.1 Transmit Pause

The transmit pause feature is intended for use in CAN networks where the CAN Message IDs are specific and cannot easily be changed. These Message IDs may have a higher priority than other defined Message IDs, while in a specific application their relative priority should be inverse. This allows for a case where one ECU sends a burst of CAN messages that cause another ECU's CAN messages to be delayed (paused).

The transmit pause feature is enabled by the MCAN_CCCR[14] TXP bit. By default this bit is disabled (MCAN_CCCR[14] TXP = 0). Each time after successfully transmitted message, a pause for two CAN bit times occurs before the start of the next transmission. This allows the other CAN nodes in the network to transmit messages even if their Message IDs have lower priority.

11.4.3.4.9.2 Dedicated Tx Buffers

Dedicated Tx Buffers are intended for message transmission under complete control of the Host CPU.

There are two options:

- Each dedicated Tx Buffer is configured with a specific Message ID.
- Two or more dedicated Tx Buffers are configured with the same Message ID. In this case the Tx Buffer with the lowest buffer number is transmitted first.

After the data section has been updated, a transmission is requested by an Add Request. This is done via the MCAN_TXBAR[x]ARn bit (where x = 0 - 31). The requested messages arbitrate internally with messages from an optional Tx FIFO or Tx Queue and externally with messages on the CAN bus, and are sent out according to their Message ID.

Table 11-1226 shows Tx Buffer/Tx FIFO/Tx Queue Element Size. A Dedicated Tx Buffer allocates Element Size 32-bit words in the Message RAM. The start address of a dedicated Tx Buffer in the Message RAM is calculated by adding transmit buffer index from 0 to 31 (MCAN_TXFQS[20:16] TFQPI) × Element Size to the Tx Buffer Start Address MCAN_TXBC[15:2] TBSA field.

Table 11-1226. Tx Buffer/Tx FIFO/Tx Queue Element Size

MCAN_TXESC[2:0] TBDS	Data Field [bytes]	Element Size [RAM words]
000	8	4
001	12	5
010	16	6
011	20	7
100	24	8
101	32	10
110	48	14
111	64	18

11.4.3.4.9.3 Tx FIFO

Tx FIFO mode is configured by setting bit MCAN_TXBC[30] TFQM = 0. The stored in the Tx FIFO messages are transmitted starting with the message referenced by the Get Index MCAN_TXFQS[12:8] TFGI field. After each transmission the Get Index is incremented until the Tx FIFO is empty. The Tx FIFO Free Level MCAN_TXFQS[5:0] TFFL field indicates the number of the available free Tx FIFO elements. The Tx FIFO allows transmission of messages with the same Message ID from different Tx Buffers in the order these messages have been written to the Tx FIFO.

New transmit messages have to be written to the Tx FIFO starting with the Tx Buffer referenced by the Put Index MCAN_TXFQS[20:16] TFQPI field. After each Add Request (MCAN_TXBAR[x] ARn = 1) the Put Index is incemented to the next free Tx FIFO element. When the Put Index reaches the Get Index (MCAN_TXFQS[20:16] TFQPI = MCAN_TXFQS[12:8] TFGI), Tx FIFO Full condition is signalled by bit MCAN_TXFQS[21] TFQF = 1. In this case no further messages should be written to the Tx FIFO until the next message has been transmitted and the Get Index has been incremented.

Copyright © 2025 Texas Instruments Incorporated

The number of requested Tx buffers should not exceed the number of free Tx Buffers as indicated by the Tx FIFO Free Level MCAN_TXFQS[5:0] TFFL field.

In case a transmission request for the Tx Buffer referenced by the Get Index is cancelled, the Get Index is incremented to the next Tx Buffer with pending transmission request and the Tx FIFO Free Level MCAN_TXFQS[5:0] TFFL field is recalculated. In case transmission cancellation is applied to any other Tx Buffer - the Get Index and the FIFO Free Level remain unchanged.

A Tx FIFO element allocates Element Size 32-bit words in the Message RAM (see Table 11-1226). The start address of the next available (free) Tx FIFO Buffer is calculated by adding Tx FIFO/Queue Put Index MCAN_TXFQS[20:16] TFQPI (from 0 to 31) × Element Size to the Tx Buffer Start Address MCAN_TXBC[15:2] TBSA field.

11.4.3.4.9.4 Tx Queue

Tx Queue mode is configured by setting bit MCAN_TXBC[30] TFQM = 1. The stored in the Tx Queue messages are transmitted starting with the highest priority message (lowest Message ID). In case two or more Queue Buffers are configured with the same Message ID, the Queue Buffer with the lowest buffer number is transmitted first.

New transmit messages have to be written to the Tx FIFO starting with the Tx Buffer referenced by the Put Index MCAN_TXFQS[20:16] TFQPI field. Each Add Request cyclically increments the Put Index to the next free Tx Buffer. In case of Tx Queue Full condition (MCAN_TXFQS[21] TFQF = 1), the Put Index is not valid and no further message should be written to the Tx Queue until at least one of the requested messages has been sent out or a pending transmission request has been cancelled.

The application may use the MCAN_TXBRP register instead of the Put Index and may place messages to any Tx Buffer without pending transmission request.

A Tx Queue Buffer allocates Element Size 32-bit words in the Message RAM (see Table 11-1226). The start address of the next available (free) Tx Queue Buffer is calculated by adding Tx FIFO/Queue Put Index MCAN_TXFQS[20:16] TFQPI (from 0 to 31) × Element Size to the Tx Buffer Start Address MCAN_TXBC[15:2] TBSA field.

11.4.3.4.9.5 Mixed Dedicated Tx Buffers/Tx FIFO

For this combination the Tx Buffers section in the Message RAM is separated in two parts:

- Dedicated Tx Buffers: the number of Dedicated Tx Buffers is configured by the MCAN_TXBC[21:16] NDTB field
- Tx FIFO: the number of Tx Buffers assigned to the Tx FIFO is configured by the MCAN_TXBC[29:24] TFQS field

If the MCAN_TXBC[29:24] TFQS field is empty (zero) - only Dedicated Tx Buffers are used.

Tx prioritization:

- Scan Dedicated Tx Buffers and oldest pending Tx FIFO Buffer (referenced by the MCAN_TXFQS[12:8] TFGI field)
- Buffer with lowest Message ID gets highest priority and is transmitted next

Figure 11-317 shows Mixed Dedicated Tx Buffers/Tx FIFO example.

Copyright © 2025 Texas Instruments Incorporated

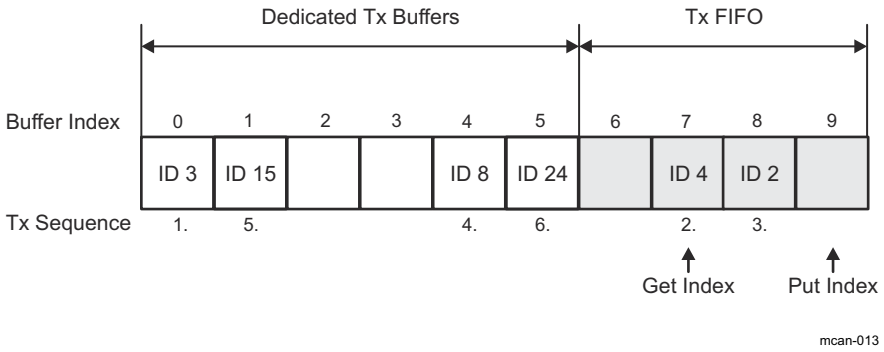

Figure 11-317. Mixed Dedicated Tx Buffers /Tx FIFO (example)

11.4.3.4.9.6 Mixed Dedicated Tx Buffers/Tx Queue

For this combination the Tx Buffers section in the Message RAM is separated in two parts:

- Dedicated Tx Buffers: the number of Dedicated Tx Buffers is configured by the MCAN_TXBC[21:16] NDTB field
- Tx Queue: the number of Tx Buffers assigned to the Tx Queue is configured by the MCAN_TXBC[29:24] TFQS field

If MCAN_TXBC[29:24] TFQS field is empty (zero) - only Dedicated Tx Buffers are used.

Tx prioritization:

- Scan all Tx Buffers with activated transmission request
- Tx Buffer with lowest Message ID gets highest priority and is transmitted next

Figure 11-318 shows Mixed Dedicated Tx Buffers/Tx Queue example.

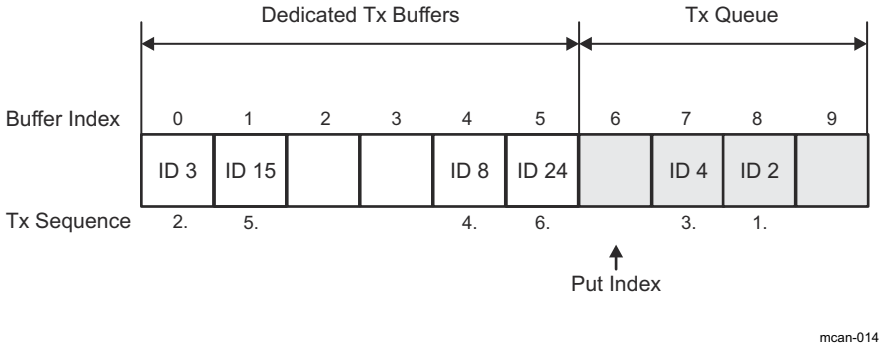

Figure 11-318. Mixed Dedicated Tx Buffers /Tx Queue (example)

11.4.3.4.9.7 Transmit Cancellation

This feature is especially intended for gateway and AUTOSAR based applications. The Host CPU can cancel a requested transmission from a dedicated Tx Buffer or a Tx Queue Buffer by setting bit MCAN_TXBCR[n] CRn = 1 (where n = 0 - 31). The corresponding bit position n is equivalent to the number of the Tx Buffer.

Transmit cancellation is not intended for Tx FIFO operation.

Successful cancellation is signalled by setting the corresponding bit of the MCAN_TXBCF register (MCAN_TXBCF[n] CFn = 1).

If transmission from a Tx Buffer is already ongoing and a transmit cancellation is requested, the corresponding MCAN_TXBRP[n] TRPn bit remains set as long as the transmission is in progress. If the transmission was successful, the corresponding MCAN_TXBTO[n] TOn and MCAN_TXBCF[n] CFn bits are set. If the transmission was not successful, only the corresponding bit MCAN_TXBCF[n] CFn = 1.

Copyright © 2025 Texas Instruments Incorporated

Note

If pending transmission is cancelled immediately before this transmission could have been started, a short time window occurs where no transmission is started even if another message is also pending in this node. This may enable another node to transmit a message which may have a lower priority than the second message in this node.

11.4.3.4.9.8 Tx Event Handling

To support Tx Event Handling the Message RAM has implemented a Tx Event FIFO section. Up to 32 Tx Event FIFO elements can be configured. Section 11.4.3.4.11.4 describes the Tx Event FIFO element. After message transmission on the CAN bus, Message ID and Timestamp are stored in a Tx Event FIFO element. To link a Tx Event to a Tx Event FIFO element, the Message Marker from the transmitted Tx Buffer is copied into the Tx Event FIFO element.

A Tx Event FIFO full condition is signalled by the MCAN_IR[14] TEFF bit. In this case no further elements are written to the Tx Event FIFO until at least one element has been read out and the Tx Event FIFO Get Index has been incremented (MCAN_TXEFS[12:8] EFGI). In case a Tx Event occurs while the Tx Event FIFO is full, this event is rejected and interrupt flag MCAN_IR[15] TEFL bit is set.

The Tx Event FIFO watermark can be configured to avoid a Tx Event FIFO overflow. When the Tx Event FIFO fill level reaches the Tx Event FIFO watermark configured by the MCAN_TXEFC[29:24] EFWM field, interrupt flag MCAN_IR[13] TEFW is set. When reading from the Tx Event FIFO, two times the Tx Event FIFO Get Index MCAN_TXEFS[12:8] EFGI field has to be added to the Tx Event FIFO start address MCAN_TXEFC[15:2] EFSA field.

11.4.3.4.10 FIFO Acknowledge Handling

The Get Indices of the two Rx FIFOs (Rx FIFO 0 or Rx FIFO 1) and the Tx Event FIFO are controlled by writing to the corresponding FIFO Acknowledge Index (see MCAN_RXF0A, MCAN_RXF1A, and MCAN_TXEFA). Writing to the FIFO Acknowledge Index will set the FIFO Get Index to the FIFO Acknowledge Index plus one and thereby updates the FIFO Fill Level.

There are two use cases:

- A single element has been read from the FIFO: the Get Index value is written to the FIFO Acknowledge Index.
- A sequence of elements has been read from the FIFO: the Get Index value (Index of the last element read) is written to the FIFO Acknowledge Index at the end of that read sequence.

The Host CPU has free access to the Message RAM. The special care has to be taken when reading FIFO elements in an arbitrary order (Get Index not considered). This can be useful when reading a High Priority Message from one of the two Rx FIFOs. In this case the FIFO's Acknowledge Index should not be written because this would set the Get Index to a wrong position and also changes the FIFO's Fill Level. In this case some of the older FIFO elements would be lost.

Note

The application has to ensure that a valid value is written to the FIFO Acknowledge Index. The MCAN module does not check for erroneous values.

11.4.3.4.11 Message RAM

The MCAN module has implemented Message RAM. The main purpose of the Message RAM is to store:

- Receive Messages
- Transmit Messages
- Tx Event Elements
- Message ID Filter Elements

Copyright © 2025 Texas Instruments Incorporated

11.4.3.4.11.1 Message RAM Configuration

The MCAN module is configured to allocate 4352 words in the Message RAM. The Message RAM has a width of 32 bits.

Refer :Section 3.1 for the address range of the Message RAM.

The Message RAM is capable to include each of the sections listed in Figure 11-319. It is not necessary to configure each of the sections (a section in the Message RAM may be 0) and there is not restriction with respect to the sequence of the sections. For parity checking or ECC a respective number of bits has to be added to each word.

When the MCAN module addresses the Message RAM it addresses 32-bit words. The start addresses are configurable and they are 32-bit word addresses.

The element size can be configured for

- Rx FIFO 0 via the MCAN_RXESC[2:0] F0DS field
- Rx FIFO 1 via the MCAN_RXESC[6:4] F1DS field
- Rx Buffers via the MCAN_RXESC[10:8] RBDS field
- Tx Buffers via the MCAN_TXESC[2:0] TBDS field

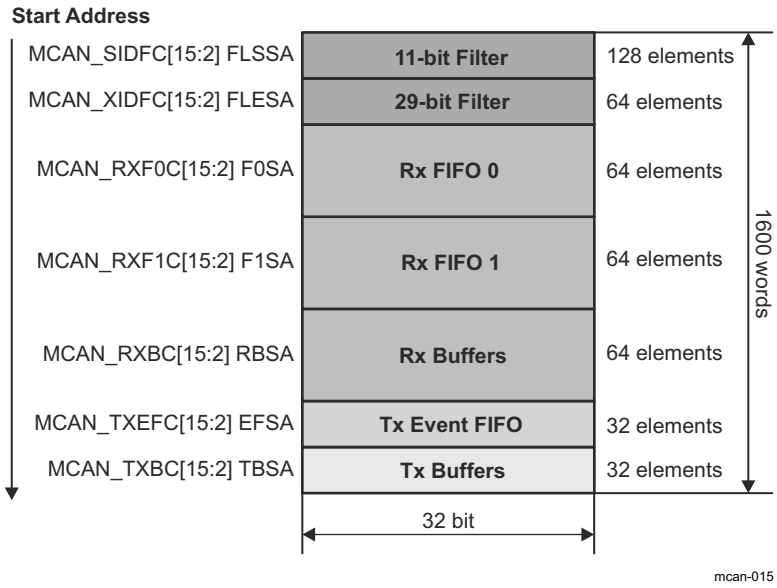

Figure 11-319. Message RAM Configuration

The Host CPU configures the following information in the Message RAM:

- Start addresses of the memory sections
- Number of elements in each section
- The size of the elements in some sections

Note

Above image is meant to allocate memory for 4352 words (max supported).

The MCAN module does not check for errors in the Message RAM configuration. The configuration of the start addresses of the different sections and the number of elements of each section has to be done carefully. This will prevent falsification or loss of data.

Copyright © 2025 Texas Instruments Incorporated

11.4.3.4.11.2 Rx Buffer and FIFO Element

Up to 64 Rx Buffers and two Rx FIFOs can be configured in the Message RAM. Each Rx FIFO section can be configured to store up to 64 received messages. The element size can be configured for storage of CAN FD messages with up to 64 bytes data field via the MCAN_RXESC register.

Figure 11-320 shows Rx Buffer/Rx FIFO element structure.

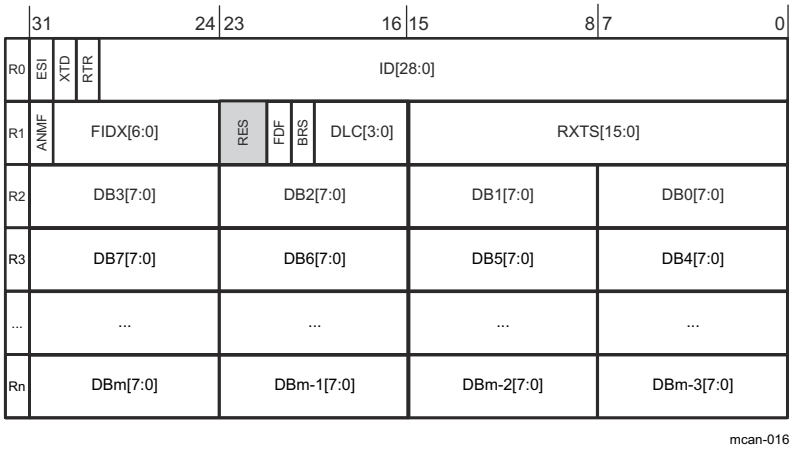

Figure 11-320. Rx Buffer/Rx FIFO Element Structure

Table 11-1227 shows Rx Buffer/Rx FIFO element field descriptions.

Table 11-1227. Rx Buffer/Rx FIFO Element Field Descriptions

Word	Bits	Field Name	Description
R0	31	ESI	Error State Indicator • 0x0: Transmitting node is error active • 0x1: Transmitting node is error passive
	30	XTD	Extended Identifier Signals to the Host CPU whether the received frame has a standard or extended identifier. • 0x0: 11-bit standard identifier • 0x1: 29-bit extended identifier
	29	RTR	Remote Transmission Request Signals to the Host CPU whether the received frame is a data frame or a remote frame. • 0x0: Received frame is a data frame • 0x1: Received frame is a remote frame **Note:** There are no remote frames in CAN FD format. In case a CAN FD frame was received (FDF = 1), RTR bit reflects the state of the reserved r1 bit (RES[23]).
	28:0	ID[28:0]	Identifier Standard or extended identifier depending on XTD bit. A standard identifier is stored into ID[28:18].

Copyright © 2025 Texas Instruments Incorporated

Table 11-1227. Rx Buffer/Rx FIFO Element Field Descriptions (continued)

Word	Bits	Field Name	Description
R1	31	ANMF	Accepted Non-matching Frame Acceptance of non-matching frames may be enabled via the MCAN_GFC[5:4] ANFS and MCAN_GFC[3:2] ANFE fields. • 0x0: Received frame matching filter index FIDX field • 0x1: Received frame did not match any Rx filter element
	30:24	FIDX[6:0]	Filter Index 0x0-0x7F (0-127): Index of matching Rx acceptance filter element (invalid if ANMF = 1). Range is 0 to MCAN_SIDFC[23:16] LSS - 1 respectively MCAN_XIDFC[22:16] LSE - 1.
	23:22	RES	Reserved
	21	FDF	FD Format • 0x0: Standard frame format • 0x1: CAN FD frame format (new DLC-coding and CRC)
	20	BRS	Bit Rate Switch • 0x0: Frame received without bit rate switching • 0x1: Frame received with bit rate switching
	19:16	DLC[3:0]	Data Length Code • 0x0-0x8 (0-8): CAN + CAN FD: received frame has 0-8 data bytes • 0x9-0xF (9-15): CAN: received frame has 8 data bytes • 0x9-0xF (9-15): CAN FD: received frame has 12/16/20/24/32/48/64 data bytes
	15:0	RXTS[15:0]	Rx Timestamp Timestamp Counter value captured on start of frame reception. Resolution depending on configuration of the Timestamp Counter Prescaler MCAN_TSCC[19:16] TCP.
R2	31:24	DB3[7:0]	Data Byte 3
	23:16	DB2[7:0]	Data Byte 2
	15:8	DB1[7:0]	Data Byte 1
	7:0	DB0[7:0]	Data Byte 0
R3	31:24	DB7[7:0]	Data Byte 7
	23:16	DB6[7:0]	Data Byte 6
	15:8	DB5[7:0]	Data Byte 5
	7:0	DB4[7:0]	Data Byte 4
...	...	...	...
Rn	31:24	DBm[7:0]	Data Byte m
	23:16	DBm-1[7:0]	Data Byte m-1
	15:8	DBm-2[7:0]	Data Byte m-2
	7:0	DBm-3[7:0]	Data Byte m-3

Note: Depending on the configuration of the element size (MCAN_RXESC), between two and sixteen 32-bit words (Rn = 3-17) are used for storage of a CAN message's data field.

Copyright © 2025 Texas Instruments Incorporated

11.4.3.4.11.3 Tx Buffer Element

The Tx Buffers section can be configured to hold dedicated Tx Buffers as well as a Tx FIFO/Tx Queue. In case that the Tx Buffers section is shared by dedicated Tx buffers and a Tx FIFO/Tx Queue, the dedicated Tx Buffers start at the beginning of the Tx Buffers section followed by the buffers assigned to the Tx FIFO or Tx Queue. The Tx Handler makes difference between dedicated Tx Buffers and Tx FIFO/Tx Queue via the MCAN_TXBC[29:24] TFQS and MCAN_TXBC[21:16] NDTB fields. The element size can be configured for storage of CAN FD messages with up to 64 bytes data field via the MCAN_TXESC register.

Figure 11-321 shows Tx Buffer element structure.

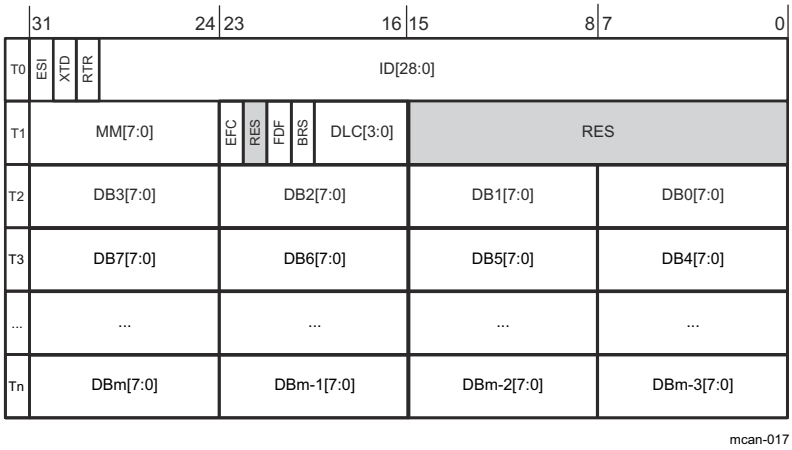

Figure 11-321. Tx Buffer Element Structure

Table 11-1228 shows Tx Buffer element field descriptions.

Copyright © 2025 Texas Instruments Incorporated

Table 11-1228. Tx Buffer Element Field Descriptions

Word	Bits	Field Name	Description
T0	31	ESI	Error State Indicator • 0x0: ESI bit in CAN FD format depends only on error passive flag • 0x1: ESI bit in CAN FD format transmitted recessive **Note:** The ESI bit of the transmit buffer is or'ed with the error passive flag to decide the value of the ESI bit in the transmitted CAN FD frame. As required by the CAN FD protocol specification, an error active node may optionally transmit the ESI bit recessive, but an error passive node will always transmit the ESI bit recessive.
	30	XTD	Extended Identifier • 0x0: 11-bit standard identifier • 0x1: 29-bit extended identifier
	29	RTR	Remote Transmission Request • 0x0: Transmit data frame • 0x1: Transmit remote frame **Note:** When RTR = 1, the MCAN module transmits a remote frame according to ISO11898-1:2015, even if the MCAN_CCCR[8] FDOE bit enables the transmission in CAN FD format.
	28:0	ID[28:0]	Identifier Standard or extended identifier depending on XTD bit. A standard identifier has to be written to ID[28:18].

Copyright © 2025 Texas Instruments Incorporated

Table 11-1228. Tx Buffer Element Field Descriptions (continued)

Word	Bits	Field Name	Description
T1	31:24	MM[7:0]	Message Marker Written by Host CPU during Tx Buffer configuration. Copied into Tx Event FIFO element for identification of Tx message status (see also MM[7:0] field in Table 11-1229).
	23	EFC	Event FIFO Control • 0x0: Don't store Tx events • 0x1: Store Tx events
	22	RES	Reserved
	21	FDF	FD Format • 0x0: Frame transmitted in Classic CAN format • 0x1: Frame transmitted in CAN FD format
	20	BRS	Bit Rate Switch • 0x0: CAN FD frames transmitted without bit rate switching • 0x1: CAN FD frames transmitted with bit rate switching **Note:** ESI, FDF, and BRS bits are only evaluated when CAN FD operation is enabled vie the MCAN_CCCR[8] FDOE bit. BRS bit is only evaluated when in addition the MCAN_CCCR[9] BRSE = 1.
	19:16	DLC[3:0]	Data Length Code • 0x0-0x8 (0-8): CAN + CAN FD: transmit frame has 0-8 data bytes • 0x9-0xF (9-15): CAN: transmit frame has 8 data bytes • 0x9-0xF (9-15): CAN FD: transmit frame has 12/16/20/24/32/48/64 data bytes
	15:0	RES	Reserved
T2	31:24	DB3[7:0]	Data Byte 3
	23:16	DB2[7:0]	Data Byte 2
	15:8	DB1[7:0]	Data Byte 1
	7:0	DB0[7:0]	Data Byte 0
T3	31:24	DB7[7:0]	Data Byte 7
	23:16	DB6[7:0]	Data Byte 6
	15:8	DB5[7:0]	Data Byte 5
	7:0	DB4[7:0]	Data Byte 4
...	...	...	...
Tn	31:24	DBm[7:0]	Data Byte m
	23:16	DBm-1[7:0]	Data Byte m-1
	15:8	DBm-2[7:0]	Data Byte m-2
	7:0	DBm-3[7:0]	Data Byte m-3

Note: Depending on the configuration of the element size (MCAN_TXESC), between two and sixteen 32-bit words (Tn = 3-17) are used for storage of a CAN message's data field.

Copyright © 2025 Texas Instruments Incorporated

11.4.3.4.11.4 Tx Event FIFO Element

Each element stores information about transmitted messages. By reading the Tx Event FIFO the Host CPU gets this information in the order the messages were transmitted. Status information about the Tx Event FIFO can be obtained from the MCAN_TXEFS register.

Figure 11-322 shows Tx Event FIFO element structure.

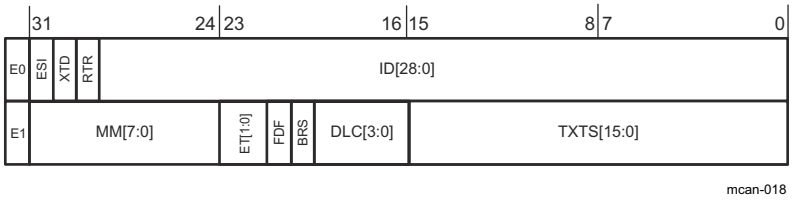

Figure 11-322. Tx Event FIFO Element Structure

Table 11-1229 shows Tx Event FIFO element field descriptions.

Table 11-1229. Tx Event FIFO Element Field Descriptions

Word	Bits	Field Name	Description
E0	31	ESI	Error State Indicator • 0x0: Transmitting node is error active • 0x1: Transmitting node is error passive
	30	XTD	Extended Identifier • 0x0: 11-bit standard identifier • 0x1: 29-bit extended identifier
	29	RTR	Remote Transmission Request • 0x0: Data frame transmitted • 0x1: Remote frame transmitted
	28:0	ID[28:0]	Identifier Standard or extended identifier depending on XTD bit. A standard identifier has to be written to ID[28:18].

Copyright © 2025 Texas Instruments Incorporated

Table 11-1229. Tx Event FIFO Element Field Descriptions (continued)

Word	Bits	Field Name	Description
E1	31:24	MM[7:0]	Message Marker Copied from Tx Buffer into Tx Event FIFO element for identification of Tx message status (see also MM[7:0] field in Table 11-1228).
	23:22	ET[1:0]	Event Type • 0x0: Reserved • 0x1: Tx event • 0x2: Transmission in spite of cancellation (always set for transmissions in DAR mode) • 0x3: Reserved
	21	FDF	FD Format • 0x0: Standard frame format • 0x1: CAN FD frame format (new DLC-coding and CRC)
	20	BRS	Bit Rate Switch • 0x0: Frame transmitted without bit rate switching • 0x1: Frame transmitted with bit rate switching
	19:16	DLC[3:0]	Data Length Code • 0x0-0x8 (0-8): CAN + CAN FD: frame with 0-8 data bytes transmitted • 0x9-0xF (9-15): CAN: frame with 8 data bytes transmitted • 0x9-0xF (9-15): CAN FD: frame with 12/16/20/24/32/48/64 data bytes transmitted
	15:0	TXTS[15:0]	Tx Timestamp Timestamp Counter value captured on start of frame transmission. Resolution depending on configuration of the Timestamp Counter Prescaler MCAN_TSCC[19:16] TCP filed.

11.4.3.4.11.5 Standard Message ID Filter Element

Up to 128 filter elements can be configured for 11-bit standard IDs. When accessing a Standard Message ID Filter element, its address is the Filter List Standard Start Address MCAN_SIDFC[15:2] FLSSA field plus the index of the filter element (0-127).

Figure 11-323 shows Standard Message ID Filter element structure.

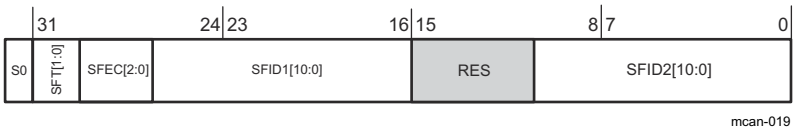

Figure 11-323. Standard Message ID Filter Element Structure

Table 11-1230 shows Standard Message ID Filter element field descriptions.

Copyright © 2025 Texas Instruments Incorporated

Table 11-1230. Standard Message ID Filter Element Field Descriptions

Word	Bits	Field Name	Description
S0	31:30	SFT[1:0]	Standard Filter Type • 0x0: Range filter from SFID1 to SFID2 (SFID2 ≥ SFID1) • 0x1: Dual ID filter for SFID1 or SFID2 • 0x2: Classic filter: SFID1 = filter; SFID2 = mask • 0x3: Filter element disabled **Note:** With SFT = 11 the filter element is disabled and the acceptance filtering continues (same behaviour as with SFEC = 000)
	29:27	SFEC[2:0]	Standard Filter Element Configuration All enabled filter elements are used for acceptance filtering of standard frames. Acceptance filtering stops at the first matching enabled filter element or when the end of the filter list is reached. If SFEC = 100, 101, or 110 a match sets interrupt flag MCAN_IR[8]HPM and, if enabled, an interrupt is generated. In this case the MCAN_HPMS register is updated with the status of the priority match. • 0x0: Disable filter element • 0x1: Store in Rx FIFO 0 if filter matches • 0x2: Store in Rx FIFO 1 if filter matches • 0x3: Reject ID if filter matches • 0x4: Set priority if filter matches • 0x5: Set priority and store in FIFO 0 if filter matches • 0x6: Set priority and store in FIFO 1 if filter matches • 0x7: Store into Rx Buffer, configuration of SFT[1:0] ignored
	26:16	SFID1[10:0]	Standard Filter ID 1 When filtering for Rx Buffers this field defines the ID of a standard message to be stored. The received identifiers must match exactly, no masking mechanism is used.
	15:11	RES	Reserved
	10:0	SFID2[10:0]	Standard Filter ID 2 This bit field has a different meaning depending on the configuration of SFEC: • 1) SFEC = 001 - 110 Second ID of standard ID filter element • 2) SFEC = 111 Filter for Rx Buffers
		SFID2[10:9]	This filed is decides whether the received message is stored into an Rx Buffer or treated as message A, B, or C of the debug message sequence. • 0x0: Store message into an Rx Buffer • 0x1: Debug Message A • 0x2: Debug Message B • 0x3: Debug Message C **Note:** Debug feature is not supported.
		SFID2[8:6]	This field is used to control the filter event pins at the Extension Interface. A one at the respective bit position enables generation of a pulse at the related filter event pin with the duration of one MCAN_ICKL period in case the filter matches. **Note:** Only two filter event pins are supported.
		SFID2[5:0]	This field defines the offset to the Rx Buffer Start Address MCAN_RXBC[15:2] RBSA field for storage of a matching message.

Copyright © 2025 Texas Instruments Incorporated

11.4.3.4.11.6 Extended Message ID Filter Element

Up to 64 filter elements can be configured for 29-bit extended IDs. When accessing an Extended Message ID Filter element, its address is the Filter List Extended Start Address MCAN_XIDFC[15:2] FLESA field plus two times the index of the filter element (0-63).

Figure 11-324 shows Extended Message ID Filter element structure.

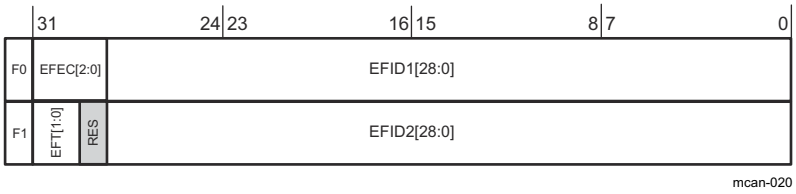

Figure 11-324. Extended Message ID Filter Element Structure

Table 11-1231 shows Extended Message ID Filter element field descriptions.

Table 11-1231. Extended Message ID Filter Element Field Descriptions

Word	Bits	Field Name	Description
F0	31:29	EFEC[2:0]	Extended Filter Element Configuration All enabled filter elements are used for acceptance filtering of extended frames. Acceptance filtering stops at the first matching enabled filter element or when the end of the filter list is reached. If EFEC = 100, 101, or 110 a match sets interrupt flag MCAN_IR[8]HPM and, if enabled, an interrupt is generated. In this case the MCAN_HPMS register is updated with the status of the priority match. • 0x0: Disable filter element • 0x1: Store in Rx FIFO 0 if filter matches • 0x2: Store in Rx FIFO 1 if filter matches • 0x3: Reject ID if filter matches • 0x4: Set priority if filter matches • 0x5: Set priority and store in FIFO 0 if filter matches • 0x6: Set priority and store in FIFO 1 if filter matches • 0x7: Store into Rx Buffer or as debug message, configuration of EFT[1:0] ignored
	28:0	EFID1[28:0]	Extended Filter ID 1 First ID of extended ID filter element. When filtering for Rx Buffers this field defines the ID of an extended message to be stored. The received identifiers must match exactly, only XIDAM masking mechanism (see Section 11.4.3.4.8.1.5, *Extended Message ID Filtering*) is used.

Copyright © 2025 Texas Instruments Incorporated

Table 11-1231. Extended Message ID Filter Element Field Descriptions (continued)

Word	Bits	Field Name	Description
F1	31:30	EFT[1:0]	Extended Filter Type • 0x0: Range filter from EFID1 to EFID2 (EFID2 ≥ EFID1) • 0x1: Dual ID filter for EFID1 or EFID2 • 0x2: Classic filter: EFID1 = filter, EFID2 = mask • 0x3: Range filter from EFID1 to EFID2 (EFID2 ≥ EFID1), XIDAM mask not applied
	29	RES	Reserved
	28:0	EFID2[28:0]	Extended Filter ID 2 This bit field has a different meaning depending on the configuration of EFEC: • 1) EFEC = 001 - 110 Second ID of extended ID filter element • 2) EFEC = 111 Filter for Rx Buffers
		EFID2[10:9]	This field decides whether the received message is stored into an Rx Buffer or treated as message A, B, or C of the debug message sequence. • 0x0: Store message into an Rx Buffer • 0x1: Debug Message A • 0x2: Debug Message B • 0x3: Debug Message C **Note:** Debug feature is not supported.
		EFID2[8:6]	This field is used to control the filter event pins at the Extension Interface. A one at the respective bit position enables generation of a pulse at the related filter event pin with the duration of one MCAN_ICKL period in case the filter matches. **Note:** Only two filter event pins are supported.
		EFID2[5:0]	This field defines the offset to the Rx Buffer Start Address MCAN_RXBC[15:2] RBSA field for storage of a matching message.

Copyright © 2025 Texas Instruments Incorporated

11.4.3.5 MCAN Register Manual

Note

After hardware reset, the registers of the MCAN module hold the values shown in the register descriptions.

Additionally, the Bus_Off state is reset and the MCAN_TX pin is set to recessive (high). The MCAN_CCCR[0] INIT bit is set to enable the software initialization. The MCAN module will not influence the CAN bus until the software resets the MCAN_CCCR[0] INIT bit.

Copyright © 2025 Texas Instruments Incorporated

11.4.3.5.1 MSS_MCAN_CFG Registers

Table 11-1233 lists the memory-mapped registers for the MSS_MCAN_CFG registers. All register offset addresses not listed in Table 11-1233 should be considered as reserved locations and the register contents should not be modified.

Table 11-1233. MSS_MCAN_CFG Registers

Offset	Acronym	Register Name	Section
0h	SS_PID	SS_PID	Go
4h	SS_CTRL	SS_CTRL	Go
8h	SS_STAT	SS_STAT	Go
Ch	SS_ICS	SS_ICS	Go
10h	SS_IRS	SS_IRS	Go
14h	SS_IECS	SS_IECS	Go
18h	SS_IE	SS_IE	Go
1Ch	SS_IES	SS_IES	Go
20h	SS_EOI	SS_EOI	Go
24h	SS_EXT_TS_PS	SS_EXT_TS_PS	Go
28h	SS_EXT_TS_USIC	SS_EXT_TS_USIC	Go
200h	CREL	CREL	Go
204h	ENDN	ENDN	Go
208h	CUST	CUST	Go
20Ch	DBTP	DBTP	Go
210h	TEST	TEST	Go
214h	RWD	RWD	Go
218h	CCCR	CCCR	Go
21Ch	NBTP	NBTP	Go
220h	TSCC	TSCC	Go
224h	TSCV	TSCV	Go
228h	TOCC	TOCC	Go
22Ch	TOCV	TOCV	Go
230h	RES00	RES00	Go
234h	RES01	RES01	Go
238h	RES02	RES02	Go
23Ch	RES03	RES03	Go
240h	ECR	ECR	Go
244h	PSR	PSR	Go
248h	TDCR	TDCR	Go
24Ch	RES04	RES04	Go
250h	IR	IR	Go
254h	IE	IE	Go
258h	ILS	ILS	Go
25Ch	ILE	ILE	Go
260h	RES05	RES05	Go
264h	RES06	RES06	Go
268h	RES07	RES07	Go
26Ch	RES08	RES08	Go
270h	RES09	RES09	Go
274h	RES10	RES10	Go

Copyright © 2025 Texas Instruments Incorporated

Table 11-1233. MSS_MCAN_CFG Registers (continued)

Offset	Acronym	Register Name	Section
278h	RES11	RES11	Go
27Ch	RES12	RES12	Go
280h	GFC	GFC	Go
284h	SIDFC	SIDFC	Go
288h	XIDFC	XIDFC	Go
28Ch	RES13	RES13	Go
290h	XIDAM	XIDAM	Go
294h	HPMS	HPMS	Go
298h	NDAT1	NDAT1	Go
29Ch	NDAT2	NDAT2	Go
2A0h	RXF0C	RXF0C	Go
2A4h	RXF0S	RXF0S	Go
2A8h	RXF0A	RXF0A	Go
2ACh	RXBC	RXBC	Go
2B0h	RXF1C	RXF1C	Go
2B4h	RXF1S	RXF1S	Go
2B8h	RXF1A	RXF1A	Go
2BCh	RXESC	RXESC	Go
2C0h	TXBC	TXBC	Go
2C4h	TXFQS	TXFQS	Go
2C8h	TXESC	TXESC	Go
2CCh	TXBRP	TXBRP	Go
2D0h	TXBAR	TXBAR	Go
2D4h	TXBCR	TXBCR	Go
2D8h	TXBTO	TXBTO	Go
2DCh	TXBCF	TXBCF	Go
2E0h	TXBTIE	TXBTIE	Go
2E4h	TXBCIE	TXBCIE	Go
2E8h	RES14	RES14	Go
2ECh	RES15	RES15	Go
2F0h	TXEFC	TXEFC	Go
2F4h	TXEFS	TXEFS	Go
2F8h	TXEFA	TXEFA	Go
2FCh	RES16	RES16	Go

Complex bit access types are encoded to fit into small table cells. Table 11-1234 shows the codes that are used for access types in this section.

Table 11-1234. MSS_MCAN_CFG Access Type Codes

Access Type	Code	Description
Read Type		
R	R	Read
Write Type		
W	W	Write

Copyright © 2025 Texas Instruments Incorporated

Table 11-1234. MSS_MCAN_CFG Access Type Codes (continued)

Access Type	Code	Description
W0C	W 0C	Write 0 to clear
Reset or Default Value		
-n		Value after reset or the default value

Copyright © 2025 Texas Instruments Incorporated

11.4.3.5.1.1 SS_PID Register (Offset = 0h) [Reset = 00000000h]

SS_PID is shown in Table 11-1235.

Return to the Summary Table.

SS_PID

Table 11-1235. SS_PID Register Field Descriptions

Bit	Field	Type	Reset	Description
31-30	SCHEME	R	0h	PID register scheme
29-28	BU	R	0h	Business Unit: 10 = Processors
27-16	MODULE_ID	R	0h	Module ID
15-11	RTL	R	0h	RTL revision. Will vary depending on release.
10-8	MAJOR	R	0h	Major revision
7-6	CUSTOM	R	0x0	Custom
5-0	MINOR	R	0h	Minor revision

Copyright © 2025 Texas Instruments Incorporated

11.4.3.5.1.2 SS_CTRL Register (Offset = 4h) [Reset = 00000000h]

SS_CTRL is shown in Table 11-1236.

Return to the Summary Table.

SS_CTRL

Table 11-1236. SS_CTRL Register Field Descriptions

Bit	Field	Type	Reset	Description
31-7	NU0	R	0x0	Reserved
6	EXT_TS_CNTR_EN	R/W	0x0	External TimeStamp Counter Enable
5	AUTOWAKEUP	R/W	0x0	Automatic Wakeup Enable
4	WAKEUPREGEN	R/W	0x0	Wakeup Request Enable
3	DBGSUSP_FREE	R/W	0h	0-Honor Debug Suspend, 1-Disregard debug suspend
2-0	NU	R	0x0	Reserved

Copyright © 2025 Texas Instruments Incorporated

11.4.3.5.1.3 SS_STAT Register (Offset = 8h) [Reset = 00000000h]

SS_STAT is shown in Table 11-1237.

Return to the Summary Table.

SS_STAT

Table 11-1237. SS_STAT Register Field Descriptions

Bit	Field	Type	Reset	Description
31-3	NU1	R	0x0	Reserved
2	EN_FDOE	R	0h	Reflects the value of mcanss_enable_fdoe configuration port x=mcanss_enable_fdoe
1	MMI_DONE	R	0h	0:Memory Initialization is in progress, 1:Memory Intialization Done
0	NU	R	0x0	Reserved

Copyright © 2025 Texas Instruments Incorporated

11.4.3.5.1.4 SS_ICS Register (Offset = Ch) [Reset = 00000000h]

SS_ICS is shown in Table 11-1238.

Return to the Summary Table.

SS_ICS

Table 11-1238. SS_ICS Register Field Descriptions

Bit	Field	Type	Reset	Description
31-1	NU2	R	0x0	Reserved
0	ICS	W	0x0	This bit contains the External TimeStamp Counter Overflow Interrupt status. Write '1' to clear bits. (ICS - Interrupt Clear Shadow Register)

Copyright © 2025 Texas Instruments Incorporated

11.4.3.5.1.5 SS_IRS Register (Offset = 10h) [Reset = 00000000h]

SS_IRS is shown in Table 11-1239.

Return to the Summary Table.

SS_IRS

Table 11-1239. SS_IRS Register Field Descriptions

Bit	Field	Type	Reset	Description
31-1	NU3	R	0x0	Reserved
0	IRS	R	0x0	External TimeStamp Counter Overflow Interrupt status. Read raw interrupt status. (IRS - Interrupt Raw Status Register)

Copyright © 2025 Texas Instruments Incorporated

11.4.3.5.1.6 SS_IECS Register (Offset = 14h) [Reset = 00000000h]

SS_IECS is shown in Table 11-1240.

Return to the Summary Table.

SS_IECS

Table 11-1240. SS_IECS Register Field Descriptions

Bit	Field	Type	Reset	Description
31-1	NU4	R	0x0	Reserved
0	IECS	W	0x0	External TimeStamp Counter Overflow Interrupt. Write '1' to clear bits. (IECS - Interrupt Enable Clear Shadow Register)

Copyright © 2025 Texas Instruments Incorporated

11.4.3.5.1.7 SS_IE Register (Offset = 18h) [Reset = 00000000h]

SS_IE is shown in Table 11-1241.

Return to the Summary Table.

SS_IE

Table 11-1241. SS_IE Register Field Descriptions

Bit	Field	Type	Reset	Description
31-1	NU5	R	0x0	Reserved
0	IE	R/W	0x0	External TimeStamp Counter Overflow Interrupt. Write '1' to set interrupt enable. Read returns interrupt enable. (IE - Interrupt Enable Register)

Copyright © 2025 Texas Instruments Incorporated

11.4.3.5.1.8 SS_IES Register (Offset = 1Ch) [Reset = 00000000h]

SS_IES is shown in Table 11-1242.

Return to the Summary Table.

SS_IES

Table 11-1242. SS_IES Register Field Descriptions

Bit	Field	Type	Reset	Description
31-1	NU6	R	0x0	Reserved
0	IES	R	0x0	External TimeStamp Counter Overflow Interrupt. Read Enabled Interrupts. (IES - Interrupt Enable Status)

Copyright © 2025 Texas Instruments Incorporated

11.4.3.5.1.9 SS_EOI Register (Offset = 20h) [Reset = 00000000h]

SS_EOI is shown in Table 11-1243.

Return to the Summary Table.

SS_EOI

Table 11-1243. SS_EOI Register Field Descriptions

Bit	Field	Type	Reset	Description
31-8	NU7	R	0x0	Reserved
7-0	EOI	W	0x0	Write with bit position of targeted interrupt. (E.g. Ext TS is bit 0). Upon write, level interrupt will clear and if unserviced interrupt counter > 1 will issue another pulse interrupt. Field values: ext_ts_eoi(0): EOI value for External TS interrupt mcan_0_eoi(1): EOI value for mcan[0] interrupt mcan_1_eoi(2): EOI value for mcan[1] interrupt (EOI - End Of Interrupt)

Copyright © 2025 Texas Instruments Incorporated

11.4.3.5.1.10 SS_EXT_TS_PS Register (Offset = 24h) [Reset = 00000000h]

SS_EXT_TS_PS is shown in Table 11-1244.

Return to the Summary Table.

SS_EXT_TS_PS

Table 11-1244. SS_EXT_TS_PS Register Field Descriptions

Bit	Field	Type	Reset	Description
31-24	NU8	R	0x0	Reserved
23-0	PRESCALE	R/W	0x0	External Timestamp Prescaler reload value. External Timestamp count rate is host clock rate divided by this value with one exception: a value of 0 has the same effect as 1 .

Copyright © 2025 Texas Instruments Incorporated

11.4.3.5.1.11 SS_EXT_TS_USIC Register (Offset = 28h) [Reset = 00000000h]

SS_EXT_TS_USIC is shown in Table 11-1245.

Return to the Summary Table.

SS_EXT_TS_USIC

Table 11-1245. SS_EXT_TS_USIC Register Field Descriptions

Bit	Field	Type	Reset	Description
31-5	NU9	R	0x0	Reserved
4-0	EXT_TS_INTR_CNTR	R	0x0	Number of unserviced rollover interrupts. If >1 an EOI write will issue another pulse interrupt (EXT_TS_USIC - External TImeStamp Unserviced Interrupts Counter)

Copyright © 2025 Texas Instruments Incorporated

11.4.3.5.1.12 CREL Register (Offset = 200h) [Reset = 00000000h]

CREL is shown in Table 11-1246.

Return to the Summary Table.

CREL

Table 11-1246. CREL Register Field Descriptions

Bit	Field	Type	Reset	Description
31-28	REL	R	0h	Core Release
27-24	STEP	R	0h	Step of Core Release
23-20	SUBSTEP	R	0h	Sub-Step of Core Release
19-16	YEAR	R	0h	Time Stamp Year
15-8	MON	R	0h	Time Stamp Month
7-0	DAY	R	0h	Time Stamp Day

Copyright © 2025 Texas Instruments Incorporated

11.4.3.5.1.13 ENDN Register (Offset = 204h) [Reset = 00000000h]

ENDN is shown in Table 11-1247.

Return to the Summary Table.

ENDN

Table 11-1247. ENDN Register Field Descriptions

Bit	Field	Type	Reset	Description
31-0	ETV	R	0h	Endianess test value

Copyright © 2025 Texas Instruments Incorporated

11.4.3.5.1.14 CUST Register (Offset = 208h) [Reset = 00000000h]

CUST is shown in Table 11-1248.

Return to the Summary Table.

CUST

Table 11-1248. CUST Register Field Descriptions

Bit	Field	Type	Reset	Description
31-0	CUST	R	0x0	Custom

Copyright © 2025 Texas Instruments Incorporated

11.4.3.5.1.15 DBTP Register (Offset = 20Ch) [Reset = 00000000h]

DBTP is shown in Table 11-1249.

Return to the Summary Table.

DBTP

Table 11-1249. DBTP Register Field Descriptions

Bit	Field	Type	Reset	Description
31-24	NU13	R	0x0	Reserved
23	TDC	R/W	0x0	Transmitter Delay Compensation
22-21	NU12	R	0x0	Reserved
20-16	DBRP	R/W	0x0	Data Baud Rate Prescaler
15-13	NU11	R	0x0	Reserved
12-8	DTSEG1	R/W	0h	Data time segment before smaple point
7-4	DTSEG2	R/W	0h	Data time segment after sample point
3-0	DSJW	R/W	0h	Data resynchronization Jump Width

Copyright © 2025 Texas Instruments Incorporated

11.4.3.5.1.16 TEST Register (Offset = 210h) [Reset = 00000000h]

TEST is shown in Table 11-1250.

Return to the Summary Table.

TEST

Table 11-1250. TEST Register Field Descriptions

Bit	Field	Type	Reset	Description
31-8	NU15	R	0x0	Reserved
7	RX	R	0x0	Receive Pin
6-5	TX	R/W	0x0	Control of Transmit Pin
4	LBCK	R/W	0x0	Loop Back Mode
3-0	NU14	R	0x0	Reserved

Copyright © 2025 Texas Instruments Incorporated

11.4.3.5.1.17 RWD Register (Offset = 214h) [Reset = 00000000h]

RWD is shown in Table 11-1251.

Return to the Summary Table.

RWD

Table 11-1251. RWD Register Field Descriptions

Bit	Field	Type	Reset	Description
31-16	NU16	R	0x0	Reserved
15-8	WDV	R	0x0	Watchdog Value
7-0	WDC	R/W	0x0	Watchdog Counter Value

Copyright © 2025 Texas Instruments Incorporated

11.4.3.5.1.18 CCCR Register (Offset = 218h) [Reset = 00000000h]

CCCR is shown in Table 11-1252.

Return to the Summary Table.

CCCR

Table 11-1252. CCCR Register Field Descriptions

Bit	Field	Type	Reset	Description
31-15	NU18	R/W	0x0	Reserved
14	TXP	R/W	0x0	Transmit Pause
13	EFBI	R/W	0x0	Edge Filtering durign Bus Integration
12	PXHD	R/W	0x0	Protocol Exception Handling Disable
11-10	NU17	R	0x0	Reserved
9	BRSE	R/W	0x0	Bit Rate Switch Enable
8	FDOE	R/W	0x0	FD Operation Enable
7	TEST	R/W	0x0	Test Mode enable
6	DAR	R/W	0x0	Disable Automatic Regransmission
5	MON	R/W	0x0	Bus Monitoring Mode
4	CSR	R/W	0x0	Clock Stop Request
3	CSA	R	0x0	Clock Stop Acknowledge
2	ASM	R/W	0x0	Restriced Operation Mode
1	CCE	R/W	0x0	Configuration Change Enable
0	INIT	R/W	0h	Initialization

Copyright © 2025 Texas Instruments Incorporated

11.4.3.5.1.19 NBTP Register (Offset = 21Ch) [Reset = 00000000h]

NBTP is shown in Table 11-1253.

Return to the Summary Table.

NBTP

Table 11-1253. NBTP Register Field Descriptions

Bit	Field	Type	Reset	Description
31-25	NSJW	R/W	0h	Nominal Resynchronization Jump Width
24-16	NBRP	R/W	0x0	Nominal Baud Rate Prescaler
15-8	NTSEG1	R/W	0h	Nominal Time segment before sample point
7	NU19	R	0x0	Reserved
6-0	NTSEG2	R/W	0h	Nominal Time segment after sample point

Copyright © 2025 Texas Instruments Incorporated

11.4.3.5.1.20 TSCC Register (Offset = 220h) [Reset = 00000000h]

TSCC is shown in Table 11-1254.

Return to the Summary Table.

TSCC

Table 11-1254. TSCC Register Field Descriptions

Bit	Field	Type	Reset	Description
31-20	NU21	R	0x0	Reserved
19-16	TCP	R/W	0x0	Timestamp Counter Prescaler
15-2	NU20	R	0x0	Reserved
1-0	TSS	R/W	0x0	Timestamp Select

Copyright © 2025 Texas Instruments Incorporated

11.4.3.5.1.21 TSCV Register (Offset = 224h) [Reset = 00000000h]

TSCV is shown in Table 11-1255.

Return to the Summary Table.

TSCV

Table 11-1255. TSCV Register Field Descriptions

Bit	Field	Type	Reset	Description
31-16	NU22	R	0x0	Reserved
15-0	TSC	R/W	0x0	Timestamp Counter

Copyright © 2025 Texas Instruments Incorporated

11.4.3.5.1.22 TOCC Register (Offset = 228h) [Reset = 00000000h]

TOCC is shown in Table 11-1256.

Return to the Summary Table.

TOCC

Table 11-1256. TOCC Register Field Descriptions

Bit	Field	Type	Reset	Description
31-16	TOP	R/W	0h	Timeout Period
15-3	NU23	R	0x0	Reserved
2-1	TOS	R/W	0x0	Timeout Select
0	ETOC	R/W	0x0	Enable Timeout Counter

Copyright © 2025 Texas Instruments Incorporated

11.4.3.5.1.23 TOCV Register (Offset = 22Ch) [Reset = 00000000h]

TOCV is shown in Table 11-1257.

Return to the Summary Table.

TOCV

Table 11-1257. TOCV Register Field Descriptions

Bit	Field	Type	Reset	Description
31-16	NU24	R	0x0	Reserved
15-0	TOC	R/W	0h	Timeout Counter

Copyright © 2025 Texas Instruments Incorporated

11.4.3.5.1.24 RES00 Register (Offset = 230h) [Reset = 00000000h]

RES00 is shown in Table 11-1258.

Return to the Summary Table.

RES00

Table 11-1258. RES00 Register Field Descriptions

Bit	Field	Type	Reset	Description
31-0	RES00	R	0x0	Reserved

Copyright © 2025 Texas Instruments Incorporated

11.4.3.5.1.25 RES01 Register (Offset = 234h) [Reset = 00000000h]

RES01 is shown in Table 11-1259.

Return to the Summary Table.

RES01

Table 11-1259. RES01 Register Field Descriptions

Bit	Field	Type	Reset	Description
31-0	RES01	R	0x0	Reserved

Copyright © 2025 Texas Instruments Incorporated

11.4.3.5.1.26 RES02 Register (Offset = 238h) [Reset = 00000000h]

RES02 is shown in Table 11-1260.

Return to the Summary Table.

RES02

Table 11-1260. RES02 Register Field Descriptions

Bit	Field	Type	Reset	Description
31-0	RES02	R	0x0	Reserved

Copyright © 2025 Texas Instruments Incorporated

11.4.3.5.1.27 RES03 Register (Offset = 23Ch) [Reset = 00000000h]

RES03 is shown in Table 11-1261.

Return to the Summary Table.

RES03

Table 11-1261. RES03 Register Field Descriptions

Bit	Field	Type	Reset	Description
31-0	RES03	R	0x0	Reserved

Copyright © 2025 Texas Instruments Incorporated

11.4.3.5.1.28 ECR Register (Offset = 240h) [Reset = 00000000h]

ECR is shown in Table 11-1262.

Return to the Summary Table.

ECR

Table 11-1262. ECR Register Field Descriptions

Bit	Field	Type	Reset	Description
31-24	NU25	R	0x0	Reserved
23-16	CEL	R	0x0	CAN Error Logging
15	RP	R	0x0	Recieve Error Passive
14-8	REC	R	0x0	Recieve Error Counter
7-0	TEC	R	0x0	Transmit Error Counter

Copyright © 2025 Texas Instruments Incorporated

11.4.3.5.1.29 PSR Register (Offset = 244h) [Reset = 00000000h]

PSR is shown in Table 11-1263.

Return to the Summary Table.

PSR

Table 11-1263. PSR Register Field Descriptions

Bit	Field	Type	Reset	Description
31-23	NU27	R	0x0	Reserved
22-16	TDCV	R	0x0	Transmitter Delay Compensation Value
15	NU26	R	0x0	Reserved
14	PXE	R	0x0	Protocol Exception Event
13	RFDF	R	0x0	Recieved a CAN FD Message
12	RBRS	R	0x0	BRS flag of last recieved CAN FD Message
11	RESI	R	0x0	ESI flag of last recieved CAN FD Message
10-8	DLEC	R	0h	Data Phase Last Error Code
7	BO	R	0x0	Bus_Off status
6	EW	R	0x0	Warning Status
5	EP	R	0x0	Error Passive
4-3	ACT	R	0x0	Activity
2-0	LEC	R	0h	Last Error Code

Copyright © 2025 Texas Instruments Incorporated

11.4.3.5.1.30 TDCR Register (Offset = 248h) [Reset = 00000000h]

TDCR is shown in Table 11-1264.

Return to the Summary Table.

TDCR

Table 11-1264. TDCR Register Field Descriptions

Bit	Field	Type	Reset	Description
31-15	NU29	R	0x0	Reserved
14-8	TDCO	R/W	0x0	Transmitter Delay Compensation Offset
7	NU28	R	0x0	Reserved
6-0	TDCF	R/W	0x0	Transmitter Delay Compensation Filter Window Length

Copyright © 2025 Texas Instruments Incorporated

11.4.3.5.1.31 RES04 Register (Offset = 24Ch) [Reset = 00000000h]

RES04 is shown in Table 11-1265.

Return to the Summary Table.

RES04

Table 11-1265. RES04 Register Field Descriptions

Bit	Field	Type	Reset	Description
31-0	RES04	R	0x0	Reserved

Copyright © 2025 Texas Instruments Incorporated

11.4.3.5.1.32 IR Register (Offset = 250h) [Reset = 00000000h]

IR is shown in Table 11-1266.

Return to the Summary Table.

IR

Table 11-1266. IR Register Field Descriptions

Bit	Field	Type	Reset	Description
31-30	NU30	R	0x0	Reserved
29	ARA	R/W	0x0	Access to Reserved Address
28	PED	R/W	0x0	Protocol Error in data Phase
27	PEA	R/W	0x0	Protocol Error in Arbitration Phase
26	WDI	R/W	0x0	Watchdog Interrupt
25	BO	R/W	0x0	Bus_Off Status
24	EW	R/W	0x0	Warning Status
23	EP	R/W	0x0	Error Passive
22	ELO	R/W	0x0	Error Logging Overflow
21	BEU	R/W	0x0	Bit Error Uncorrected
20	BEC	R/W	0x0	Bit Error Corrected
19	DRX	R/W	0x0	Message stored to Dedicated Rx Buffer
18	TOO	R/W	0x0	Timeout Occurred
17	MRAF	R/W	0x0	Message RAM Access Failure
16	TSW	R/W	0x0	Timestamp Wraparound
15	TEFL	R/W	0x0	Tx Event FIFO Element Lost
14	TEFF	R/W	0x0	Tx Event FIFO Full
13	TEFW	R/W	0x0	Tx Event FIFO Watermark Reached
12	TEFN	R/W	0x0	Tx Event FIFO New Entry
11	TFE	R/W	0x0	Tx FIFO Empty
10	TCF	R/W	0x0	Transmission Cancellation Finished
9	TC	R/W	0x0	Transmission Complete
8	HPM	R/W	0x0	High Priority Message
7	RF1L	R/W	0x0	Rx FIFO 1 Message Lost
6	RF1F	R/W	0x0	Rx FIFO 1 Full
5	RF1W	R/W	0x0	Rx FIFO 1 Watermark Reached
4	RF1N	R/W	0x0	Rx FIFO 1 New Message
3	RF0L	R/W	0x0	Rx FIFO 0 Message Lost
2	RF0F	R/W	0x0	Rx FIFO 0 Full
1	RF0W	R/W	0x0	Rx FIFO 0 Watermark Reached
0	RF0N	R/W	0x0	Rx FIFO 0 New Message

Copyright © 2025 Texas Instruments Incorporated

11.4.3.5.1.33 IE Register (Offset = 254h) [Reset = 00000000h]

IE is shown in Table 11-1267.

Return to the Summary Table.

IE

Table 11-1267. IE Register Field Descriptions

Bit	Field	Type	Reset	Description
31-30	NU31	R	0x0	Reserved
29	ARAE	R/W	0x0	Accees to Reserve Address Interrupt Enable
28	PEDE	R/W	0x0	Protocol Error in Data Phase Interrupt Enable
27	PEAE	R/W	0x0	Protocol Error in Arbitration Phase Interrupt Enable
26	WDIE	R/W	0x0	Watchdog Interrupt Enable
25	BOE	R/W	0x0	Bus_Off Status Interrupt Enable
24	EWE	R/W	0x0	Warning Status Interrupt Enable
23	EPE	R/W	0x0	Error Passive Interrupt Enable
22	ELOE	R/W	0x0	Error Logging Overflow Interrupt Enable
21	BEUE	R/W	0x0	Bit Error Uncorrected Interrupt Enable
20	BECE	R/W	0x0	Bit Error Corrected Interrupt Enable
19	DRX	R/W	0x0	Message stored to Dedicated Rx Buffer Interrupt Enable
18	TOOE	R/W	0x0	Timeout Occurred Interrupt Enable
17	MRAFE	R/W	0x0	Message RAM Access Failure Interrupt Enable
16	TSWE	R/W	0x0	Timestamp Wraparound Interrupt Enable
15	TEFLE	R/W	0x0	Tx Event FIFO Event Lost Interrupt Enable
14	TEFFE	R/W	0x0	Tx Event FIFO Full Interrupt Enable
13	TEFWE	R/W	0x0	Tx Event FIFO Watermark Reached Interrupt enable
12	TEFNE	R/W	0x0	Tx Event FIFO New Entry Interrupt Enable
11	TFEE	R/W	0x0	Tx FIFO Empty Interrupt Enable
10	TCFE	R/W	0x0	Transmission Cancellation Finishied Interrupt Enable
9	TCE	R/W	0x0	Transmission Completed Interrupt Enable
8	HPME	R/W	0x0	High Priority message Interrupt Enable
7	RF1LE	R/W	0x0	rx FIFO 1 Message Lost Interrupt Enable
6	RF1FE	R/W	0x0	Rx FIFO 1 Full Interrupt Enable
5	RF1WE	R/W	0x0	Rx FIFO 1 Watermark Reached Interrupt Enable
4	RF1NE	R/W	0x0	Rx FIFO 1 New Message Interrupt Enable
3	RF0LE	R/W	0x0	Rx FIFO 0 Message Lost Interrupt Enable
2	RF0FE	R/W	0x0	Rx FIFO 0 Full Interrupt Enable
1	RF0WE	R/W	0x0	Rx FIFO 0 Watermark Reached Interrupt Enable
0	RF0NE	R/W	0x0	Rx FIFO 0 New Message Interrupt Enable

Copyright © 2025 Texas Instruments Incorporated

11.4.3.5.1.34 ILS Register (Offset = 258h) [Reset = 00000000h]

ILS is shown in Table 11-1268.

Return to the Summary Table.

ILS

Table 11-1268. ILS Register Field Descriptions

Bit	Field	Type	Reset	Description
31-30	NU32	R	0x0	Reserved
29	ARAL	R/W	0x0	Accees to Reserve Address Interrupt Line
28	PEDL	R/W	0x0	Protocol Error in Data Phase Interrupt Line
27	PEAL	R/W	0x0	Protocol Error in Arbitration Phase Interrupt Line
26	WDIL	R/W	0x0	Watchdog Interrupt Line
25	BOL	R/W	0x0	Bus_Off Status Interrupt Line
24	EWL	R/W	0x0	Warning Status Interrupt Line
23	EPL	R/W	0x0	Error Passive Interrupt Line
22	ELOL	R/W	0x0	Error Logging Overflow Interrupt Line
21	BEUL	R/W	0x0	Bit Error Uncorrected Interrupt Line
20	BECL	R/W	0x0	Bit Error Corrected Interrupt Line
19	DRXL	R/W	0x0	Message stored to Dedicated Rx Buffer Interrupt Line
18	TOOL	R/W	0x0	Timeout Occurred Interrupt Line
17	MRAFL	R/W	0x0	Message RAM Access Failure Interrupt Line
16	TSWL	R/W	0x0	Timestamp Wraparound Interrupt Line
15	TEFLL	R/W	0x0	Tx Event FIFO Event Lost Interrupt Line
14	TEFFL	R/W	0x0	Tx Event FIFO Full Interrupt Line
13	TEFWL	R/W	0x0	Tx Event FIFO Watermark Reached Interrupt Line
12	TEFNL	R/W	0x0	Tx Event FIFO New Entry Interrupt Line
11	TFEL	R/W	0x0	Tx FIFO Empty Interrupt Line
10	TCFL	R/W	0x0	Transmission Cancellation Finishied Interrupt Line
9	TCL	R/W	0x0	Transmission Completed Interrupt Line
8	HPML	R/W	0x0	High Priority message Interrupt Line
7	RF1LL	R/W	0x0	rx FIFO 1 Message Lost Interrupt Line
6	RF1FL	R/W	0x0	Rx FIFO 1 Full Interrupt Line
5	RF1WL	R/W	0x0	Rx FIFO 1 Watermark Reached Interrupt Line
4	RF1NL	R/W	0x0	Rx FIFO 1 New Message Interrupt Line
3	RF0LL	R/W	0x0	Rx FIFO 0 Message Lost Interrupt Line
2	RF0FL	R/W	0x0	Rx FIFO 0 Full Interrupt Line
1	RF0WL	R/W	0x0	Rx FIFO 0 Watermark Reached Interrupt Line
0	RF0NL	R/W	0x0	Rx FIFO 0 New Message Interrupt Line

Copyright © 2025 Texas Instruments Incorporated

11.4.3.5.1.35 ILE Register (Offset = 25Ch) [Reset = 00000000h]

ILE is shown in Table 11-1269.

Return to the Summary Table.

ILE

Table 11-1269. ILE Register Field Descriptions

Bit	Field	Type	Reset	Description
31-2	NU33	R	0x0	Reserved
1	EINT1	R/W	0x0	Enable Interrupt Line 1
0	EINT0	R/W	0x0	Enable Interrupt Line 0

Copyright © 2025 Texas Instruments Incorporated

11.4.3.5.1.36 RES05 Register (Offset = 260h) [Reset = 00000000h]

RES05 is shown in Table 11-1270.

Return to the Summary Table.

RES05

Table 11-1270. RES05 Register Field Descriptions

Bit	Field	Type	Reset	Description
31-0	RES05	R	0x0	Reserved

Copyright © 2025 Texas Instruments Incorporated

11.4.3.5.1.37 RES06 Register (Offset = 264h) [Reset = 00000000h]

RES06 is shown in Table 11-1271.

Return to the Summary Table.

RES06

Table 11-1271. RES06 Register Field Descriptions

Bit	Field	Type	Reset	Description
31-0	RES06	R	0x0	Reserved

Copyright © 2025 Texas Instruments Incorporated

11.4.3.5.1.38 RES07 Register (Offset = 268h) [Reset = 00000000h]

RES07 is shown in Table 11-1272.

Return to the Summary Table.

RES07

Table 11-1272. RES07 Register Field Descriptions

Bit	Field	Type	Reset	Description
31-0	RES07	R	0x0	Reserved

Copyright © 2025 Texas Instruments Incorporated

11.4.3.5.1.39 RES08 Register (Offset = 26Ch) [Reset = 00000000h]

RES08 is shown in Table 11-1273.

Return to the Summary Table.

RES08

Table 11-1273. RES08 Register Field Descriptions

Bit	Field	Type	Reset	Description
31-0	RES08	R	0x0	Reserved

Copyright © 2025 Texas Instruments Incorporated

11.4.3.5.1.40 RES09 Register (Offset = 270h) [Reset = 00000000h]

RES09 is shown in Table 11-1274.

Return to the Summary Table.

RES09

Table 11-1274. RES09 Register Field Descriptions

Bit	Field	Type	Reset	Description
31-0	RES09	R	0x0	Reserved

Copyright © 2025 Texas Instruments Incorporated

11.4.3.5.1.41 RES10 Register (Offset = 274h) [Reset = 00000000h]

RES10 is shown in Table 11-1275.

Return to the Summary Table.

RES10

Table 11-1275. RES10 Register Field Descriptions

Bit	Field	Type	Reset	Description
31-0	RES10	R	0x0	Reserved

Copyright © 2025 Texas Instruments Incorporated

11.4.3.5.1.42 RES11 Register (Offset = 278h) [Reset = 00000000h]

RES11 is shown in Table 11-1276.

Return to the Summary Table.

RES11

Table 11-1276. RES11 Register Field Descriptions

Bit	Field	Type	Reset	Description
31-0	RES11	R	0x0	Reserved

Copyright © 2025 Texas Instruments Incorporated

11.4.3.5.1.43 RES12 Register (Offset = 27Ch) [Reset = 00000000h]

RES12 is shown in Table 11-1277.

Return to the Summary Table.

RES12

Table 11-1277. RES12 Register Field Descriptions

Bit	Field	Type	Reset	Description
31-0	RES12	R	0x0	Reserved

Copyright © 2025 Texas Instruments Incorporated

11.4.3.5.1.44 GFC Register (Offset = 280h) [Reset = 00000000h]

GFC is shown in Table 11-1278.

Return to the Summary Table.

GFC

Table 11-1278. GFC Register Field Descriptions

Bit	Field	Type	Reset	Description
31-6	NU34	R	0x0	Reserved
5-4	ANFS	R/W	0x0	Accept Non-matching Frames Standard
3-2	ANFE	R/W	0x0	Accept Non-matching Frames Extended
1	RRFS	R/W	0x0	reject Remote Frames Standard
0	RRFE	R/W	0x0	reject Remote Frames Extended

Copyright © 2025 Texas Instruments Incorporated

11.4.3.5.1.45 SIDFC Register (Offset = 284h) [Reset = 00000000h]

SIDFC is shown in Table 11-1279.

Return to the Summary Table.

SIDFC

Table 11-1279. SIDFC Register Field Descriptions

Bit	Field	Type	Reset	Description
31-24	NU36	R	0x0	Reserved
23-16	LSS_S	R/W	0x0	List Size Standard
15-2	FLSSA_S	R/W	0x0	Filter List Standard Start Address
1-0	NU35	R	0x0	Reserved

Copyright © 2025 Texas Instruments Incorporated

11.4.3.5.1.46 XIDFC Register (Offset = 288h) [Reset = 00000000h]

XIDFC is shown in Table 11-1280.

Return to the Summary Table.

XIDFC

Table 11-1280. XIDFC Register Field Descriptions

Bit	Field	Type	Reset	Description
31-24	NU38	R	0x0	Reserved
23-16	LSS_X	R/W	0x0	List Size Standard
15-2	FLSSA_X	R/W	0x0	Filter List Standard Start Address
1-0	NU37	R	0x0	Reserved

Copyright © 2025 Texas Instruments Incorporated

11.4.3.5.1.47 RES13 Register (Offset = 28Ch) [Reset = 00000000h]

RES13 is shown in Table 11-1281.

Return to the Summary Table.

RES13

Table 11-1281. RES13 Register Field Descriptions

Bit	Field	Type	Reset	Description
31-0	RES13	R	0x0	Reserved

Copyright © 2025 Texas Instruments Incorporated

11.4.3.5.1.48 XIDAM Register (Offset = 290h) [Reset = 00000000h]

XIDAM is shown in Table 11-1282.

Return to the Summary Table.

XIDAM

Table 11-1282. XIDAM Register Field Descriptions

Bit	Field	Type	Reset	Description
31-29	NU39	R	0x0	Reserved
28-0	EIDM	R/W	0h	Extended ID Mask

Copyright © 2025 Texas Instruments Incorporated

11.4.3.5.1.49 HPMS Register (Offset = 294h) [Reset = 00000000h]

HPMS is shown in Table 11-1283.

Return to the Summary Table.

HPMS

Table 11-1283. HPMS Register Field Descriptions

Bit	Field	Type	Reset	Description
31-16	NU40	R	0x0	Reserved
15	FLST	R	0x0	Filter List
14-8	FIDX	R	0x0	Filter Index
7-6	MSI	R	0x0	Message Storeage Indicator
5-0	BIDX	R	0x0	Buffer Index

Copyright © 2025 Texas Instruments Incorporated

11.4.3.5.1.50 NDAT1 Register (Offset = 298h) [Reset = 00000000h]

NDAT1 is shown in Table 11-1284.

Return to the Summary Table.

NDAT1

Table 11-1284. NDAT1 Register Field Descriptions

Bit	Field	Type	Reset	Description
31-0	ND0_31	R/W	0x0	New Data 0-31

Copyright © 2025 Texas Instruments Incorporated

11.4.3.5.1.51 NDAT2 Register (Offset = 29Ch) [Reset = 00000000h]

NDAT2 is shown in Table 11-1285.

Return to the Summary Table.

NDAT2

Table 11-1285. NDAT2 Register Field Descriptions

Bit	Field	Type	Reset	Description
31-0	ND32_63	R/W	0x0	New Data 32-63

Copyright © 2025 Texas Instruments Incorporated

11.4.3.5.1.52 RXF0C Register (Offset = 2A0h) [Reset = 00000000h]

RXF0C is shown in Table 11-1286.

Return to the Summary Table.

RXF0C

Table 11-1286. RXF0C Register Field Descriptions

Bit	Field	Type	Reset	Description
31	F0OM	R/W	0x0	Rx FIFO 0 Operation Mode
30-24	F0WM	R/W	0x0	Rx FIFO 0 Watermark
23	NU42_1	R	0x0	Reserved
22-16	F0S	R/W	0x0	Rx FIFO 0 Size
15	NU42	R	0x0	Reserved
14-2	F0SA	R/W	0x0	Rx FIFO 0 Start Address
1-0	NU41	R	0x0	Reserved

Copyright © 2025 Texas Instruments Incorporated

11.4.3.5.1.53 RXF0S Register (Offset = 2A4h) [Reset = 00000000h]

RXF0S is shown in Table 11-1287.

Return to the Summary Table.

RXF0S

Table 11-1287. RXF0S Register Field Descriptions

Bit	Field	Type	Reset	Description
31-26	NU46	R	0x0	Reserved
25	RF0L	R	0x0	Rx FIFO 0 Message Lost
24	F0F	R	0x0	Rx FIFO 0 Full
23-22	NU45	R	0x0	Reserved
21-16	F0PI	R	0x0	Rx FIFO 0 Put Index
15-14	NU44	R	0x0	Reserved
13-8	F0GI	R	0x0	Rx FIFO 0 Get Index
7	NU43	R	0x0	Reserved
6-0	F0FL	R	0x0	Rx FIFO 0 Fill Level

Copyright © 2025 Texas Instruments Incorporated

11.4.3.5.1.54 RXF0A Register (Offset = 2A8h) [Reset = 00000000h]

RXF0A is shown in Table 11-1288.

Return to the Summary Table.

RXF0A

Table 11-1288. RXF0A Register Field Descriptions

Bit	Field	Type	Reset	Description
31-6	NU47	R	0x0	Reserved
5-0	F0AI	R/W	0x0	Rx FIFO 0 Acknowledge Index

Copyright © 2025 Texas Instruments Incorporated

11.4.3.5.1.55 RXBC Register (Offset = 2ACh) [Reset = 00000000h]

RXBC is shown in Table 11-1289.

Return to the Summary Table.

RXBC

Table 11-1289. RXBC Register Field Descriptions

Bit	Field	Type	Reset	Description
31-16	NU49	R	0x0	Reserved
15-2	RBSA	R/W	0x0	Rx Buffer Start Address
1-0	NU48	R	0x0	Reserved

Copyright © 2025 Texas Instruments Incorporated

11.4.3.5.1.56 RXF1C Register (Offset = 2B0h) [Reset = 00000000h]

RXF1C is shown in Table 11-1290.

Return to the Summary Table.

RXF1C

Table 11-1290. RXF1C Register Field Descriptions

Bit	Field	Type	Reset	Description
31	F1OM	R/W	0x0	Rx FIFO 0 Operation Mode
30-24	F1WM	R/W	0x0	Rx FIFO 0 Watermark
23	NU50_1	R	0x0	Reserved
22-16	F1S	R/W	0x0	Rx FIFO 0 Size
15	NU50	R	0x0	Reserved
14-2	F1SA	R/W	0x0	Rx FIFO 0 Start Address
1-0	NU499	R	0x0	Reserved

Copyright © 2025 Texas Instruments Incorporated

11.4.3.5.1.57 RXF1S Register (Offset = 2B4h) [Reset = 00000000h]

RXF1S is shown in Table 11-1291.

Return to the Summary Table.

RXF1S

Table 11-1291. RXF1S Register Field Descriptions

Bit	Field	Type	Reset	Description
31-26	NU54	R	0x0	Reserved
25	RF1L	R	0x0	Rx FIFO 0 Message Lost
24	F1F	R	0x0	Rx FIFO 0 Full
23-22	NU53	R	0x0	Reserved
21-16	F1PI	R	0x0	Rx FIFO 0 Put Index
15-14	NU52	R	0x0	Reserved
13-8	F1GI	R	0x0	Rx FIFO 0 Get Index
7	NU51	R	0x0	Reserved
6-0	F1FL	R	0x0	Rx FIFO 0 Fill Level

Copyright © 2025 Texas Instruments Incorporated

11.4.3.5.1.58 RXF1A Register (Offset = 2B8h) [Reset = 00000000h]

RXF1A is shown in Table 11-1292.

Return to the Summary Table.

RXF1A

Table 11-1292. RXF1A Register Field Descriptions

Bit	Field	Type	Reset	Description
31-6	NU55	R	0x0	Reserved
5-0	F1AI	R/W	0x0	Rx FIFO 0 Acknowledge Index

Copyright © 2025 Texas Instruments Incorporated

11.4.3.5.1.59 RXESC Register (Offset = 2BCh) [Reset = 00000000h]

RXESC is shown in Table 11-1293.

Return to the Summary Table.

RXESC

Table 11-1293. RXESC Register Field Descriptions

Bit	Field	Type	Reset	Description
31-11	NU58	R	0x0	Reserved
10-8	RBDS	R/W	0x0	Rx Buffer data Field Size
7	NU57	R	0x0	Reserved
6-4	F1DS	R/W	0x0	Rx FIFO 1 Data Field Size
3	NU56	R	0x0	Reserved
2-0	F0DS	R/W	0x0	Rx FIFO 0 Data Field Size

Copyright © 2025 Texas Instruments Incorporated

11.4.3.5.1.60 TXBC Register (Offset = 2C0h) [Reset = 00000000h]

TXBC is shown in Table 11-1294.

Return to the Summary Table.

TXBC

Table 11-1294. TXBC Register Field Descriptions

Bit	Field	Type	Reset	Description
31	NU61	R	0x0	Reserved
30	TFQM	R	0x0	Tx FIFO/Queue Mode
29-24	TFQS	R	0x0	Transmit FIFO/Queue Size
23-22	NU60	R	0x0	Reserved
21-16	NDTB	R	0x0	Number of Dedicated Transmit Buffers
15-2	TBSA	R	0x0	Tx Buffers Start Address
1-0	NU59	R	0x0	Reserved

Copyright © 2025 Texas Instruments Incorporated

11.4.3.5.1.61 TXFQS Register (Offset = 2C4h) [Reset = 00000000h]

TXFQS is shown in Table 11-1295.

Return to the Summary Table.

TXFQS

Table 11-1295. TXFQS Register Field Descriptions

Bit	Field	Type	Reset	Description
31-22	NU64	R	0x0	Reserved
21	TFQF	R	0x0	Tx FIFO/Queue Full
20-16	TFQPI	R	0x0	Tx FIFO/Queue Put Index
15-13	NU63	R	0x0	Reserved
12-8	TFGI	R	0x0	Tx Queue Get Index
7-6	NU62	R	0x0	Reserved
5-0	TFFL	R	0x0	Tx FIFO Free Level

Copyright © 2025 Texas Instruments Incorporated

11.4.3.5.1.62 TXESC Register (Offset = 2C8h) [Reset = 00000000h]

TXESC is shown in Table 11-1296.

Return to the Summary Table.

TXESC

Table 11-1296. TXESC Register Field Descriptions

Bit	Field	Type	Reset	Description
31-3	NU65	R	0x0	Reserved
2-0	TBDS	R/W	0x0	Tx Buffer Data Field Size

Copyright © 2025 Texas Instruments Incorporated

11.4.3.5.1.63 TXBRP Register (Offset = 2CCh) [Reset = 00000000h]

TXBRP is shown in Table 11-1297.

Return to the Summary Table.

TXBRP

Table 11-1297. TXBRP Register Field Descriptions

Bit	Field	Type	Reset	Description
31-0	TRP	R	0x0	Transmission Request Pending

Copyright © 2025 Texas Instruments Incorporated

11.4.3.5.1.64 TXBAR Register (Offset = 2D0h) [Reset = 00000000h]

TXBAR is shown in Table 11-1298.

Return to the Summary Table.

TXBAR

Table 11-1298. TXBAR Register Field Descriptions

Bit	Field	Type	Reset	Description
31-0	AR	R/W0C	0x0	Add request

Copyright © 2025 Texas Instruments Incorporated

11.4.3.5.1.65 TXBCR Register (Offset = 2D4h) [Reset = 00000000h]

TXBCR is shown in Table 11-1299.

Return to the Summary Table.

TXBCR

Table 11-1299. TXBCR Register Field Descriptions

Bit	Field	Type	Reset	Description
31-0	CR	R/W0C	0x0	Cancellation Request

Copyright © 2025 Texas Instruments Incorporated

11.4.3.5.1.66 TXBTO Register (Offset = 2D8h) [Reset = 00000000h]

TXBTO is shown in Table 11-1300.

Return to the Summary Table.

TXBTO

Table 11-1300. TXBTO Register Field Descriptions

Bit	Field	Type	Reset	Description
31-0	TO	R	0x0	Transmission Occurred

Copyright © 2025 Texas Instruments Incorporated

11.4.3.5.1.67 TXBCF Register (Offset = 2DCh) [Reset = 00000000h]

TXBCF is shown in Table 11-1301.

Return to the Summary Table.

TXBCF

Table 11-1301. TXBCF Register Field Descriptions

Bit	Field	Type	Reset	Description
31-0	CF	R	0x0	Cancellation Finished

Copyright © 2025 Texas Instruments Incorporated

11.4.3.5.1.68 TXBTIE Register (Offset = 2E0h) [Reset = 00000000h]

TXBTIE is shown in Table 11-1302.

Return to the Summary Table.

TXBTIE

Table 11-1302. TXBTIE Register Field Descriptions

Bit	Field	Type	Reset	Description
31-0	TIE	R/W	0x0	Transmission Interrupt Enable

Copyright © 2025 Texas Instruments Incorporated

11.4.3.5.1.69 TXBCIE Register (Offset = 2E4h) [Reset = 00000000h]

TXBCIE is shown in Table 11-1303.

Return to the Summary Table.

TXBCIE

Table 11-1303. TXBCIE Register Field Descriptions

Bit	Field	Type	Reset	Description
31-0	CFIE	R/W	0x0	Cancellation Finished Interrupt Enable

Copyright © 2025 Texas Instruments Incorporated

11.4.3.5.1.70 RES14 Register (Offset = 2E8h) [Reset = 00000000h]

RES14 is shown in Table 11-1304.

Return to the Summary Table.

RES14

Table 11-1304. RES14 Register Field Descriptions

Bit	Field	Type	Reset	Description
31-0	RES14	R	0x0	Reserved

Copyright © 2025 Texas Instruments Incorporated

11.4.3.5.1.71 RES15 Register (Offset = 2ECh) [Reset = 00000000h]

RES15 is shown in Table 11-1305.

Return to the Summary Table.

RES15

Table 11-1305. RES15 Register Field Descriptions

Bit	Field	Type	Reset	Description
31-0	RES15	R	0x0	Reserved

Copyright © 2025 Texas Instruments Incorporated

11.4.3.5.1.72 TXEFC Register (Offset = 2F0h) [Reset = 00000000h]

TXEFC is shown in Table 11-1306.

Return to the Summary Table.

TXEFC

Table 11-1306. TXEFC Register Field Descriptions

Bit	Field	Type	Reset	Description
31-30	NU68	R/W	0x0	Reserved
29-24	EFWM	R/W	0x0	Event FIFO Watermark
23-22	NU67	R/W	0x0	Reserved
21-16	EFS	R/W	0x0	Event FIFO Size
15-2	EFSA	R/W	0x0	Event FIFO Start Address
1-0	NU66	R/W	0x0	Reserved

Copyright © 2025 Texas Instruments Incorporated

11.4.3.5.1.73 TXEFS Register (Offset = 2F4h) [Reset = 00000000h]

TXEFS is shown in Table 11-1307.

Return to the Summary Table.

TXEFS

Table 11-1307. TXEFS Register Field Descriptions

Bit	Field	Type	Reset	Description
31-26	NU72	R	0x0	Reserved
25	TEFL	R	0x0	Tx Event FIFO Element Lost
24	EFF	R	0x0	Event FIFO Full
23-21	NU71	R	0x0	Reserved
20-16	EFPI	R	0x0	Event FIFO Put Index
15-13	NU70	R	0x0	Reserved
12-8	EFGI	R	0x0	Event FIFO Get Index
7-6	NU69	R	0x0	Reserved
5-0	EFFL	R	0x0	Event FIFO FIll Level

Copyright © 2025 Texas Instruments Incorporated

11.4.3.5.1.74 TXEFA Register (Offset = 2F8h) [Reset = 00000000h]

TXEFA is shown in Table 11-1308.

Return to the Summary Table.

TXEFA

Table 11-1308. TXEFA Register Field Descriptions

Bit	Field	Type	Reset	Description
31-5	NU73	R	0x0	Reserved
4-0	EFAI	R	0x0	Event FIFO Acknowledge Index

Copyright © 2025 Texas Instruments Incorporated

11.4.3.5.1.75 RES16 Register (Offset = 2FCh) [Reset = 00000000h]

RES16 is shown in Table 11-1309.

Return to the Summary Table.

RES16

Table 11-1309. RES16 Register Field Descriptions

Bit	Field	Type	Reset	Description
31-0	RES16	R	0x0	Reserved

Copyright © 2025 Texas Instruments Incorporated

11.4.3.5.2 MSS_MCAN_ECC Registers

Table 11-1310 lists the memory-mapped registers for the MSS_MCAN_ECC registers. All register offset addresses not listed in Table 11-1310 should be considered as reserved locations and the register contents should not be modified.

Table 11-1310. MSS_MCAN_ECC Registers

Offset	Acronym	Register Name	Section
0h	REV	REV	Go
8h	VECTOR	VECTOR	Go
Ch	STAT	STAT	Go
14h	CTRL	CTRL	Go
18h	ERR_CTRL1	ERR_CTRL1	Go
1Ch	ERR_CTRL2	ERR_CTRL2	Go
20h	ERR_STAT1	ERR_STAT1	Go
24h	ERR_STAT2	ERR_STAT2	Go
28h	ERR_STAT3	ERR_STAT3	Go
3Ch	SEC_EOI_REG	SEC_EOI_REG	Go
40h	SEC_STATUS_REG0	SEC_STATUS_REG0	Go
80h	SEC_ENABLE_SET_REG0	SEC_ENABLE_SET_REG0	Go
C0h	SEC_ENABLE_CLR_REG0	SEC_ENABLE_CLR_REG0	Go
13Ch	DED_EOI_REG	DED_EOI_REG	Go
140h	DED_STATUS_REG0	DED_STATUS_REG0	Go
180h	DED_ENABLE_SET_REG0	DED_ENABLE_SET_REG0	Go
1C0h	DED_ENABLE_CLR_REG0	DED_ENABLE_CLR_REG0	Go
200h	AGGR_ENABLE_SET	AGGR_ENABLE_SET	Go
204h	AGGR_ENABLE_CLR	AGGR_ENABLE_CLR	Go
208h	AGGR_STATUS_SET	AGGR_STATUS_SET	Go
20Ch	AGGR_STATUS_CLR	AGGR_STATUS_CLR	Go

Complex bit access types are encoded to fit into small table cells. Table 11-1311 shows the codes that are used for access types in this section.

Table 11-1311. MSS_MCAN_ECC Access Type Codes

Access Type	Code	Description
Read Type		
R	R	Read
Write Type		
W	W	Write
Reset or Default Value		
-n		Value after reset or the default value

Copyright © 2025 Texas Instruments Incorporated

11.4.3.5.2.1 REV Register (Offset = 0h) [Reset = 66A03A01h]

REV is shown in Table 11-1312.

Return to the Summary Table.

Aggregator Revision Register

Table 11-1312. REV Register Field Descriptions

Bit	Field	Type	Reset	Description
31-30	SCHEME	R	1h	Scheme
29-28	BU	R	2h	bu
27-16	MODULE_ID	R	6A0h	Module ID
15-11	REVRTL	R	7h	RTL version
10-8	REVMAJ	R	2h	Major version
7-6	CUSTOM	R	0h	Custom version
5-0	REVMIN	R	1h	Minor version

Copyright © 2025 Texas Instruments Incorporated

11.4.3.5.2.2 VECTOR Register (Offset = 8h) [Reset = 00000000h]

VECTOR is shown in Table 11-1313.

Return to the Summary Table.

ECC Vector Register

Table 11-1313. VECTOR Register Field Descriptions

Bit	Field	Type	Reset	Description
31-25	NU1	R	0h	Reserved
24	RD_SVBUS_DONE	R/W	0h	Status to indicate if read on serial VBUS is complete, write of any value will clear this bit. Writing 1 to any bit will clear the corresponding bits. Reads do not alter the value of the field.
23-16	RD_SVBUS_ADDR	R/W	0h	Read address
15	RD_SVBUS	R/W	0h	Write 1 to trigger a read on the serial VBUS. Writing 1 to any bit will set the corresponding bit. Reads do not alter the value of the field.
14-11	NU0	R	0h	Reserved
10-0	ECC_VEC	R/W	0h	Value written to select the corresponding ECC RAM for control or status

Copyright © 2025 Texas Instruments Incorporated

11.4.3.5.2.3 STAT Register (Offset = Ch) [Reset = 00000002h]

STAT is shown in Table 11-1314.

Return to the Summary Table.

Misc Status

Table 11-1314. STAT Register Field Descriptions

Bit	Field	Type	Reset	Description
31-11	NU2	R	0h	Reserved
10-0	NUM_RAMS	R	2h	Indicates the number of RAMS serviced by the ECC aggregator

Copyright © 2025 Texas Instruments Incorporated

11.4.3.5.2.4 CTRL Register (Offset = 14h) [Reset = 00000187h]

CTRL is shown in Table 11-1315.

Return to the Summary Table.

CTRL

Table 11-1315. CTRL Register Field Descriptions

Bit	Field	Type	Reset	Description
31-9	NU3	R	0h	TI Internal : Reserved
8	CHECK TIMEOUT	W	1h	TI Internal : Check timeout
7	CHECK PARITY	W	1h	TI Internal : Check Parity
6	ERROR_ONCE	W	0h	TI Internal : Force Error only once
5	FORCE_N_ROW	W	0h	TI Internal : Force Error on any RAM read
4	FORCE_DED	W	0h	TI Internal : Force Double Bit Error
3	FORCE_SEC	W	0h	TI Internal : Force Single Bit Error
2	EN_RMW	W	1h	TI Internal : Enable rmw
1	ECC_CHK	W	1h	TI Internal : Enable ECC check
0	ECC_EN	W	1h	TI Internal : Enable ECC

Copyright © 2025 Texas Instruments Incorporated

11.4.3.5.2.5 ERR_CTRL1 Register (Offset = 18h) [Reset = 00000000h]

ERR_CTRL1 is shown in Table 11-1316.

Return to the Summary Table.

ERR_CTRL1

Table 11-1316. ERR_CTRL1 Register Field Descriptions

Bit	Field	Type	Reset	Description
31-0	ECC_ROW	R/W	0h	TI Internal : Row address where single or double-bit error needs to be applied. This is ignored if force_n_row is set

Copyright © 2025 Texas Instruments Incorporated

11.4.3.5.2.6 ERR_CTRL2 Register (Offset = 1Ch) [Reset = 00000000h]

ERR_CTRL2 is shown in Table 11-1317.

Return to the Summary Table.

ERR_CTRL2

Table 11-1317. ERR_CTRL2 Register Field Descriptions

Bit	Field	Type	Reset	Description
31-16	ECC_BIT2	R/W	0h	TI Internal : Data bit that needs to be flipped if double bit error needs to be forced
15-0	ECC_BIT1	R/W	0h	TI Internal : Data bit that needs to be flipped when force_sec is set

Copyright © 2025 Texas Instruments Incorporated

11.4.3.5.2.7 ERR_STAT1 Register (Offset = 20h) [Reset = 00000000h]

ERR_STAT1 is shown in Table 11-1318.

Return to the Summary Table.

ERR_STAT1

Table 11-1318. ERR_STAT1 Register Field Descriptions

Bit	Field	Type	Reset	Description
31-16	ECC_BIT1_STS	R	0h	TI Internal : Data bit that corresponds to the single-bit error
15	CLR_ECC_CTRL_REG	W	0h	TI Internal : Clear Ctrl Reg Error Status. Write 1 to clear. This bit is self clearing.
14-13	CLR_ECC_PAR	W	0h	TI Internal : Clear Parity Error Status. Write 1 to clear. This bit is self clearing.
12	CLR_ECC_OTHER	W	0h	TI Internal : Clear Other Error Status. Write 1 to clear. This bit is self clearing.
11-10	CLR_ECC_DED	W	0h	TI Internal : Clear Double Bit Error Status. Write 1 to clear. This bit is self clearing.
9-8	CLR_ECC_SEC	W	0h	TI Internal : Clear Single Bit Error Status. Write 1 to clear. This bit is self clearing.
7	ECC_CTRL_REG	W	0h	TI Internal : Force ctrl reg pending interrupt. Write 1 to set. This bit is self clearing.
6-5	ECC_PAR	W	0h	TI Internal : Force ECC parity pending interrupt. Write 1 to set. This bit is self clearing.
4	ECC_OTHER	W	0h	TI Internal : Force ECC other pending interrupt. Write 1 to set. This bit is self clearing.
3-2	ECC_DED	W	0h	TI Internal : Force ECC DED pending interrupt. Write 1 to set. This bit is self clearing.
1-0	ECC_SEC	W	0h	TI Internal : Force ECC SEC pending interrupt. Write 1 to set. This bit is self clearing.

Copyright © 2025 Texas Instruments Incorporated

11.4.3.5.2.8 ERR_STAT2 Register (Offset = 24h) [Reset = 00000000h]

ERR_STAT2 is shown in Table 11-1319.

Return to the Summary Table.

ERR_STAT2

Table 11-1319. ERR_STAT2 Register Field Descriptions

Bit	Field	Type	Reset	Description
31-0	ECC_ROW	R	0h	TI Internal : Row address where the single or double-bit error has occurred

Copyright © 2025 Texas Instruments Incorporated

11.4.3.5.2.9 ERR_STAT3 Register (Offset = 28h) [Reset = 00000000h]

ERR_STAT3 is shown in Table 11-1320.

Return to the Summary Table.

ERR_STAT3

Table 11-1320. ERR_STAT3 Register Field Descriptions

Bit	Field	Type	Reset	Description
31-10	NU6	R	0h	TI Internal : Reserved
9	CLR_TIMEOUT_PEND	W	0h	TI Internal : Clear timeout pending
8-2	NU5	R	0h	TI Internal : Reserved
1	TIMEOUT_PEND	W	0h	TI Internal : Timeout pending
0	NU4	R	0h	TI Internal : Reserved

Copyright © 2025 Texas Instruments Incorporated

11.4.3.5.2.10 SEC_EOI_REG Register (Offset = 3Ch) [Reset = 00000000h]

SEC_EOI_REG is shown in Table 11-1321.

Return to the Summary Table.

EOI Register

Table 11-1321. SEC_EOI_REG Register Field Descriptions

Bit	Field	Type	Reset	Description
31-1	NU7	R	0h	Reserved
0	SEC_EOI_WR	R/W	0h	EOI Register. Writing 1 to any bit will set the corresponding bit. Reads do not alter the value of the field. This bit is self clearing, reading this bit will return 0.

Copyright © 2025 Texas Instruments Incorporated

11.4.3.5.2.11 SEC_STATUS_REG0 Register (Offset = 40h) [Reset = 00000000h]

SEC_STATUS_REG0 is shown in Table 11-1322.

Return to the Summary Table.

Interrupt Status Register 0

Table 11-1322. SEC_STATUS_REG0 Register Field Descriptions

Bit	Field	Type	Reset	Description
31-2	NU8	R	0h	Reserved
1	CTRL_EDC_VBUSS_PEND	R	0h	Interrupt Pending Status for ctrl_edc_vbuss_pend.
0	SEC_PEND	R	0h	Interrupt Pending Status for msgmem_pend.

Copyright © 2025 Texas Instruments Incorporated

11.4.3.5.2.12 SEC_ENABLE_SET_REG0 Register (Offset = 80h) [Reset = 00000000h]

SEC_ENABLE_SET_REG0 is shown in Table 11-1323.

Return to the Summary Table.

Interrupt Enable Set Register 0

Table 11-1323. SEC_ENABLE_SET_REG0 Register Field Descriptions

Bit	Field	Type	Reset	Description
31-2	NU9	R	0h	Reserved
1	CTRL_EDC_VBUSS_ENABLE_SET	R/W	0h	Interrupt Enable Set Register for ctrl_edc_vbuss_pend. Writing 1 to any bit will set the corresponding bit. Reads do not alter the value of the field.
0	SEC_EN_SET	R/W	0h	Interrupt Enable Set Register for msgmem_pend. Writing 1 to any bit will set the corresponding bit. Reads do not alter the value of the field.

Copyright © 2025 Texas Instruments Incorporated

11.4.3.5.2.13 SEC_ENABLE_CLR_REG0 Register (Offset = C0h) [Reset = 00000000h]

SEC_ENABLE_CLR_REG0 is shown in Table 11-1324.

Return to the Summary Table.

Interrupt Enable Clear Register 0

Table 11-1324. SEC_ENABLE_CLR_REG0 Register Field Descriptions

Bit	Field	Type	Reset	Description
31-2	NU10	R	0h	Reserved
1	CTRL_EDC_VBUSS_ENABLE_CLR	R/W	0h	Interrupt Enable Clear Register for ctrl_edc_vbuss_pend. Writing 1 to any bit will clear the corresponding bits. Reads do not alter the value of the field. Reading this bit will return 0.
0	SEC_EN_CLR	R/W	0h	Interrupt Enable Clear Register for msgmem_pend. Writing 1 to any bit will clear the corresponding bits. Reads do not alter the value of the field. Reading this bit will return 0.

Copyright © 2025 Texas Instruments Incorporated

11.4.3.5.2.14 DED_EOI_REG Register (Offset = 13Ch) [Reset = 00000000h]

DED_EOI_REG is shown in Table 11-1325.

Return to the Summary Table.

EOI Register

Table 11-1325. DED_EOI_REG Register Field Descriptions

Bit	Field	Type	Reset	Description
31-1	NU11	R	0h	Reserved
0	DED_EOI_WR	R/W	0h	EOI Register. Writing 1 to any bit will set the corresponding bit. Reads do not alter the value of the field. This bit is self clearing, reading this bit will return 0.

Copyright © 2025 Texas Instruments Incorporated

11.4.3.5.2.15 DED_STATUS_REG0 Register (Offset = 140h) [Reset = 00000000h]

DED_STATUS_REG0 is shown in Table 11-1326.

Return to the Summary Table.

Interrupt Status Register 0

Table 11-1326. DED_STATUS_REG0 Register Field Descriptions

Bit	Field	Type	Reset	Description
31-2	NU12	R	0h	Reserved
1	CTRL_EDC_VBUSS_PEND	R	0h	Interrupt Pending Status for ctrl_edc_vbuss_pend.
0	DED_PEND	R	0h	Interrupt Pending Status for msgmem_pend.

Copyright © 2025 Texas Instruments Incorporated

11.4.3.5.2.16 DED_ENABLE_SET_REG0 Register (Offset = 180h) [Reset = 00000000h]

DED_ENABLE_SET_REG0 is shown in Table 11-1327.

Return to the Summary Table.

Interrupt Enable Set Register 0

Table 11-1327. DED_ENABLE_SET_REG0 Register Field Descriptions

Bit	Field	Type	Reset	Description
31-2	NU13	R	0h	Reserved
1	CTRL_EDC_VBUSS_ENABLE_SET	R/W	0h	Interrupt Enable Set Register for ctrl_edc_vbuss_pend. Writing 1 to any bit will set the corresponding bit. Reads do not alter the value of the field.
0	DED_EN_SET	R/W	0h	Interrupt Enable Set Register for msgmem_pend. Writing 1 to any bit will set the corresponding bit. Reads do not alter the value of the field.

Copyright © 2025 Texas Instruments Incorporated

11.4.3.5.2.17 DED_ENABLE_CLR_REG0 Register (Offset = 1C0h) [Reset = 00000000h]

DED_ENABLE_CLR_REG0 is shown in Table 11-1328.

Return to the Summary Table.

Interrupt Enable Clear Register 0

Table 11-1328. DED_ENABLE_CLR_REG0 Register Field Descriptions

Bit	Field	Type	Reset	Description
31-2	NU14	R	0h	Reserved
1	CTRL_EDC_VBUSS_ENABLE_CLR	R/W	0h	Interrupt Enable Clear Register for ctrl_edc_vbuss_pend. Writing 1 to any bit will clear the corresponding bits. Reads do not alter the value of the field. Reading this bit will return 0.
0	DED_EN_CLR	R/W	0h	Interrupt Enable Clear Register for msgmem_pend. Writing 1 to any bit will clear the corresponding bits. Reads do not alter the value of the field. Reading this bit will return 0.

Copyright © 2025 Texas Instruments Incorporated

11.4.3.5.2.18 AGGR_ENABLE_SET Register (Offset = 200h) [Reset = 00000000h]

AGGR_ENABLE_SET is shown in Table 11-1329.

Return to the Summary Table.

AGGR interrupt enable set Register

Table 11-1329. AGGR_ENABLE_SET Register Field Descriptions

Bit	Field	Type	Reset	Description
31-2	NU15	R	0h	Reserved
1	TIMEOUT	R/W	0h	Interrupt Enable Set Register for svbus timeout errors. Writing 1 to any bit will set the corresponding bit. Reads do not alter the value of the field.
0	PARITY	R/W	0h	Interrupt Enable Set Register for parity errors. Writing 1 to any bit will set the corresponding bit. Reads do not alter the value of the field.

Copyright © 2025 Texas Instruments Incorporated

11.4.3.5.2.19 AGGR_ENABLE_CLR Register (Offset = 204h) [Reset = 00000000h]

AGGR_ENABLE_CLR is shown in Table 11-1330.

Return to the Summary Table.

AGGR interrupt enable clear Register

Table 11-1330. AGGR_ENABLE_CLR Register Field Descriptions

Bit	Field	Type	Reset	Description
31-2	NU16	R	0h	Reserved
1	TIMEOUT	R/W	0h	Interrupt Enable Clear for svbus timeout errors. Writing 1 to any bit will clear the corresponding bits. Reads do not alter the value of the field. Reading this bit will return 0.
0	PARITY	R/W	0h	Interrupt Enable Clear for parity errors. Writing 1 to any bit will clear the corresponding bits. Reads do not alter the value of the field. Reading this bit will return 0.

Copyright © 2025 Texas Instruments Incorporated

11.4.3.5.2.20 AGGR_STATUS_SET Register (Offset = 208h) [Reset = 00000000h]

AGGR_STATUS_SET is shown in Table 11-1331.

Return to the Summary Table.

AGGR interrupt status set Register

Table 11-1331. AGGR_STATUS_SET Register Field Descriptions

Bit	Field	Type	Reset	Description
31-4	NU17	R	0h	Reserved
3-2	TIMEOUT	R/W	0h	Interrupt status set for svbus timeout errors. A write to increment field. Writing a value to this field increment the field value by the value written. Reads do not alter the value of the field.
1-0	PARITY	R/W	0h	Interrupt status set for parity errors. A write to increment field. Writing a value to this field increment the field value by the value written. Reads do not alter the value of the field.

Copyright © 2025 Texas Instruments Incorporated

11.4.3.5.2.21 AGGR_STATUS_CLR Register (Offset = 20Ch) [Reset = 00000000h]

AGGR_STATUS_CLR is shown in Table 11-1332.

Return to the Summary Table.

AGGR interrupt status clear Register

Table 11-1332. AGGR_STATUS_CLR Register Field Descriptions

Bit	Field	Type	Reset	Description
31-4	NU18	R	0h	Reserved
3-2	TIMEOUT	R/W	0h	Interrupt status clear for svbus timeout errors. A write to decrement field. Writing a value to this field decrements the field value by the value written. Reads do not alter the value of the field.
1-0	PARITY	R/W	0h	Interrupt status clear for parity errors. A write to decrement field. Writing a value to this field decrements the field value by the value written. Reads do not alter the value of the field.

11.5 Audio Interfaces

11.5.1 Multichannel Audio Serial Port (McASP)

This section describes the multichannel audio serial port (McASP).

11.5.1.1 McASP Overview 3660
11.5.1.2 McASP Environment 3663
11.5.1.3 McASP Integration 3674
11.5.1.4 McASP Functional Description 3678
11.5.1.5 McASP Low-Level Programming Model 3717
11.5.1.6 McASP Register Manual 3739

Copyright © 2025 Texas Instruments Incorporated

11.5.1.1 McASP Overview

This section introduces the multichannel audio serial port (McASP) module and describes its main functions and connections in the device.

Note

The McASP is also known as RCSS_MCASP.

The McASP functions as a general-purpose audio serial port optimized to the requirements of various audio applications. The McASP module can operate in both transmit and receive modes. The McASP is useful for time-division multiplexed (TDM) stream, Inter-IC Sound (I2S) protocols reception and transmission as well as for an intercomponent digital audio interface transmission (DIT). The McASP has the flexibility to gluelessly connect to a Sony/Philips digital interface (S/PDIF) transmit physical layer component.

Although intercomponent digital audio interface reception (DIR) mode (i.e. S/PDIF stream receiving) is not natively supported by the McASP module, a specific TDM mode implementation for the McASP receivers allows an easy connection to external DIR components (for example, S/PDIF to I2S format converters).

The device have integrated three McASP modules with:

- McASP1 supporting up to 16 channels with independent TX/RX clock/sync domain
- McASP2 and McASP3 support up to 6 channels with independent TX/RX clock/sync domain.

shows the McASP modules in the device.

Copyright © 2025 Texas Instruments Incorporated

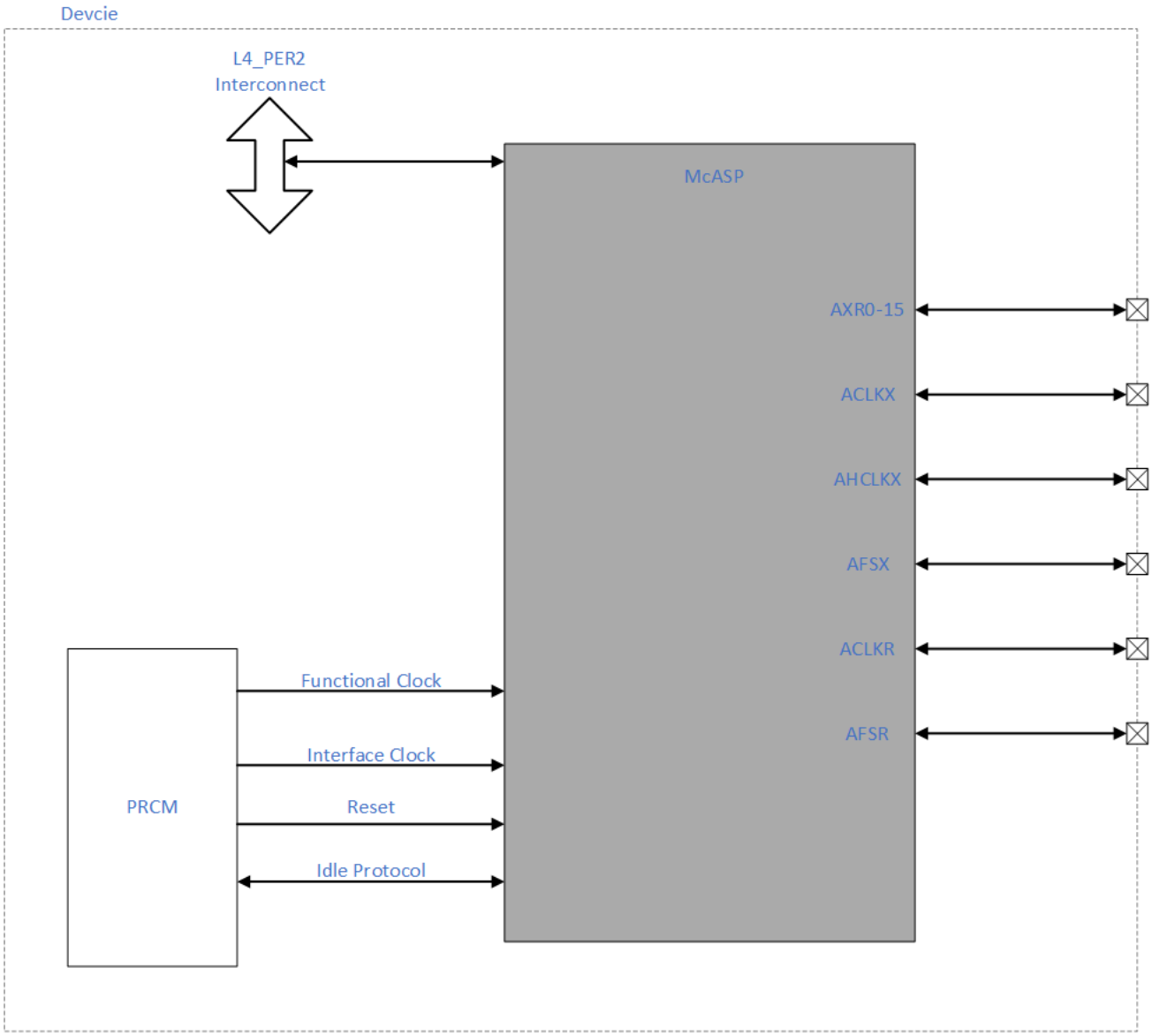

Figure 11-325. McASP Modules Overview

McASP module includes the following main features:

- Independent serializer for each AXRx channel.
- Idle request/acknowledge protocol
- A single 32-bit buffer per serializer for transmit and receive operations
- 2 x interconnect slave interface ports:
  - A configuration (CFG) port supplied with an internal L4-interconnect interface clock
  - A slave DMA data port synchronized with functional clock
- Two independent clock generator modules for transmit and receive.
  - Clocking flexibility allows the McASP to receive and transmit at different rates. For example, the McASP can receive data at 48 kHz but output up-sampled data at 96 kHz or 192 kHz.
- McASP module functional clock can be generated:
  - internally (master mode)
  - supplied over McASP serial interface (slave mode)
  - has a controllable functional clock divide ratio

Copyright © 2025 Texas Instruments Incorporated

- Independent transmit and receive modules, each includes:
  - Programmable clock and frame sync generator.
  - TDM streams from 2 to 32, and 384 time slots.
  - Support for time slot sizes of 8, 12, 16, 20, 24, 28, and 32 bits.
  - Data formatter for bit manipulation.
- Glueless connection to audio analog-to-digital converters (ADC), digital-to-analog converters (DAC), codec, digital audio interface receiver (DIR), and S/PDIF transmit physical layer components.
- Wide variety of I2S and similar bit-stream format.
- Integrated digital audio interface transmitter (DIT):
  - S/PDIF, IEC60958-1, AES-3 formats.
  - Enhanced channel status/user data RAM.
- 384-slot TDM with external digital audio interface receiver (DIR) device.
  - For DIR reception, an external DIR receiver integrated circuit should be used with I2S output format and connected to the McASP receive section.
- Support for 2x DMA requests (one per direction):
  - 1 level-sensitive transmit direct memory access (DMA) request common for all of the McASP serializers
  - 1 level-sensitive receive direct memory access (DMA) request common for all of the McASP serializers
  - All transmit DMA requests are mapped to the device DMA crossbar
- One transmit interrupt request common for all serializers
- One receive interrupt request common for all serializers
- Each of the Rx and Tx interrupts is propagated to different host processors via the device Interrupt Crossbar

Note

Because a serializer receive and transmit channels data is shared on the same McASP data pin, user can choose to have either Tx or Rx function from a serializer, not both at the same time.

Copyright © 2025 Texas Instruments Incorporated

11.5.1.2 McASP Environment

This section describes the McASP application fields from an environment point of view (external connections), along with the McASP connectivity options. This section also lists all of the possible interfaces and describes the protocol and data format used in each case. Figure 11-326 shows the McASP modules in their environment in the device.

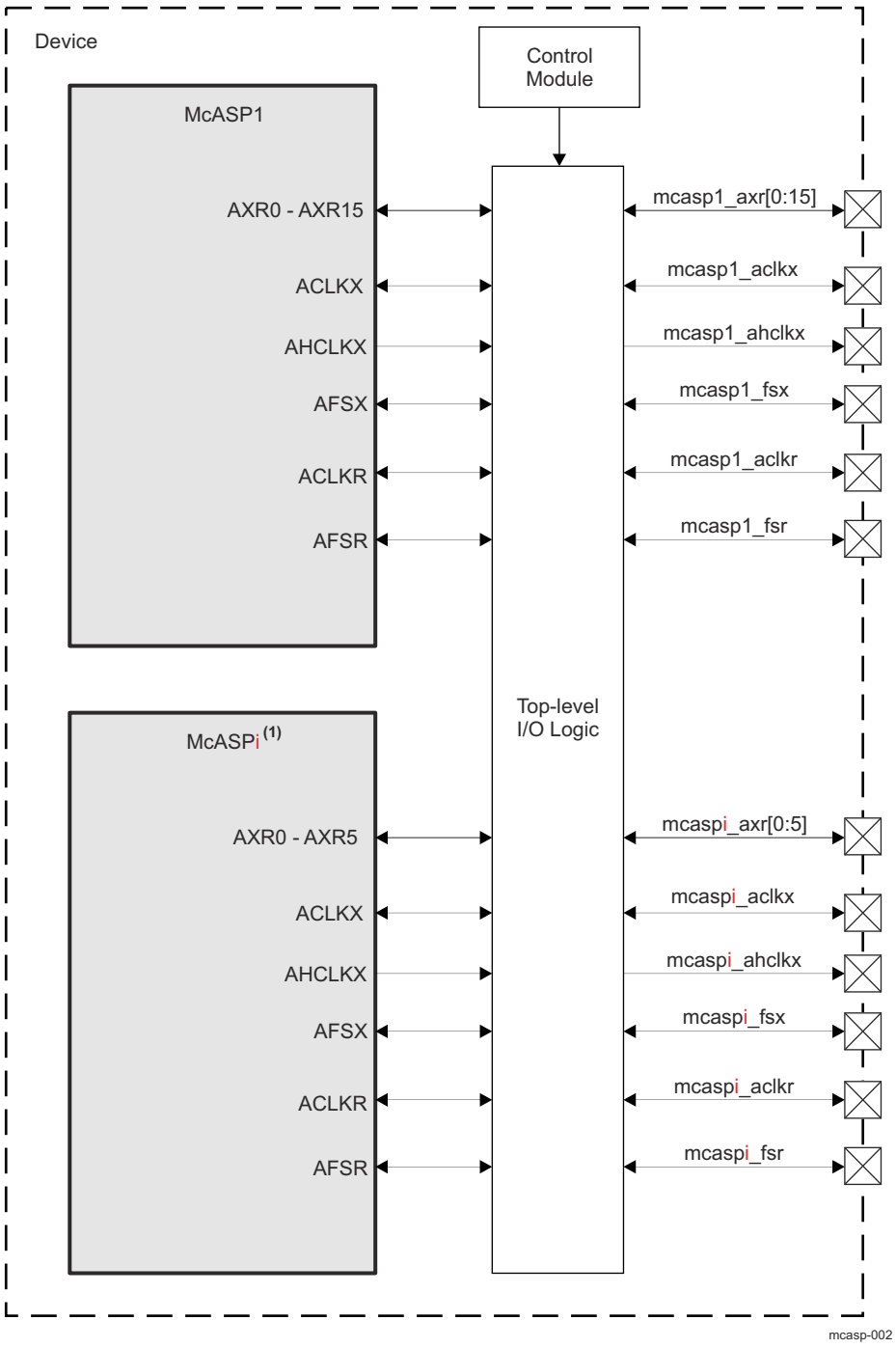

A. i = 2 and 3

Figure 11-326. McASP Environment

Copyright © 2025 Texas Instruments Incorporated

11.5.1.2.1 McASP Signals

Table 11-1333 describes the McASP pins, their corresponding signal names at device level and specifies their links to functions.

Table 11-1333. McASP I/O Signals

Module Pin Name	Device Level Signal Name	I/O[1]	Description	Module Pin Reset Value
		McASP1 module		
AXR0	mcasp1_axr[0]	I/O	Audio transmit/receive data - channel 0	HiZ
AXR1	mcasp1_axr[1]	I/O	Audio transmit/receive data - channel 1	HiZ
AXR2	mcasp1_axr[2]	I/O	Audio transmit/receive data - channel 2	HiZ
AXR3	mcasp1_axr[3]	I/O	Audio transmit/receive data - channel 3	HiZ
AXR4	mcasp1_axr[4]	I/O	Audio transmit/receive data - channel 4	HiZ
AXR5	mcasp1_axr[5]	I/O	Audio transmit/receive data - channel 5	HiZ
AXR6	mcasp1_axr[6]	I/O	Audio transmit/receive data - channel 6	HiZ
AXR7	mcasp1_axr[7]	I/O	Audio transmit/receive data - channel 7	HiZ
AXR8	mcasp1_axr[8]	I/O	Audio transmit/receive data - channel 8	HiZ
AXR9	mcasp1_axr[9]	I/O	Audio transmit/receive data - channel 9	HiZ
AXR10	mcasp1_axr[10]	I/O	Audio transmit/receive data - channel 10	HiZ
AXR11	mcasp1_axr[11]	I/O	Audio transmit/receive data - channel 11	HiZ
AXR12	mcasp1_axr[12]	I/O	Audio transmit/receive data - channel 12	HiZ
AXR13	mcasp1_axr[13]	I/O	Audio transmit/receive data - channel 13	HiZ
AXR14	mcasp1_axr[14]	I/O	Audio transmit/receive data - channel 14	HiZ
AXR15	mcasp1_axr[15]	I/O	Audio transmit/receive data - channel 15	HiZ
ACLKX	mcasp1_aclkx	I/O	Transmit bit clock	HiZ
AHCLKX	mcasp1_ahclkx	O	Transmit high-frequency master clock	HiZ
AFSX	mcasp1_fsx	I/O	Transmit frame synchronization	HiZ
ACLKR	mcasp1_aclkr	I/O	Receive bit clock	HiZ
AFSR	mcasp1_fsr	I/O	Receive frame synchronization	HiZ
		McASP2 module		
AXR0	mcasp2_axr[0]	I/O	Audio transmit/receive data - channel 0	HiZ
AXR1	mcasp2_axr[1]	I/O	Audio transmit/receive data - channel 1	HiZ
AXR2	mcasp2_axr[2]	I/O	Audio transmit/receive data - channel 2	HiZ
AXR3	mcasp2_axr[3]	I/O	Audio transmit/receive data - channel 3	HiZ
AXR4	mcasp2_axr[4]	I/O	Audio transmit/receive data - channel 4	HiZ
AXR5	mcasp2_axr[5]	I/O	Audio transmit/receive data - channel 5	HiZ
ACLKX	mcasp2_aclkx	I/O	Transmit bit clock	HiZ
AHCLKX	mcasp2_ahclkx	O	Transmit high-frequency master clock	HiZ
AFSX	mcasp2_fsx	I/O	Transmit frame synchronization	HiZ
ACLKR	mcasp2_aclkr	I/O	Receive bit clock	HiZ
AFSR	mcasp2_fsr	I/O	Receive frame synchronization	HiZ
		McASP3 module		
AXR0	mcasp3_axr[0]	I/O	Audio transmit/receive data - channel 0	HiZ
AXR1	mcasp3_axr[1]	I/O	Audio transmit/receive data - channel 1	HiZ
AXR2	mcasp3_axr[2]	I/O	Audio transmit/receive data - channel 2	HiZ
AXR3	mcasp3_axr[3]	I/O	Audio transmit/receive data - channel 3	HiZ
AXR4	mcasp3_axr[4]	I/O	Audio transmit/receive data - channel 4	HiZ
AXR5	mcasp3_axr[5]	I/O	Audio transmit/receive data - channel 5	HiZ

Copyright © 2025 Texas Instruments Incorporated

Table 11-1333. McASP I/O Signals (continued)

Module Pin Name	Device Level Signal Name	I/O(1)	Description	Module Pin Reset Value
ACLKX	mcasp3_aclkx	I/O	Transmit bit clock	HiZ
AHCLKX	mcasp3_ahclkx	O	Transmit high-frequency master clock	HiZ
AFSX	mcasp3_fsx	I/O	Transmit frame synchronization	HiZ
ACLKR	mcasp3_aclkr	I/O	Receive bit clock	HiZ
AFSR	mcasp3_fsr	I/O	Receive frame synchronization	HiZ

(1) I = Input; O = Output; I/O = Bidirectional

Note

For the mcaspx_aclkx, mcaspx_ahclkx and mcaspx_aclkr signals to work properly, the INPUTENABLE bit of the appropriate CTRL_CORE_PAD_x registers should be set to 0x1 because of retiming purposes.

Note

The path from module pin to device pad(s) is defined at the device I/O logic level. The I/O logic maps the module signals to the different pads of the device and is programmable in the Control Module registers. For more information, refer to the *Pad Configuration Registers* and *Control Module Register Manual* in *Control Module*.

Note

Except the pad configuration registers, additional Control Module registers have to be configured to map McASP2 and McASP3 signals to the device pads. The MUXMODE field of the corresponding pad configuration register has to be set to 0xF and the corresponding bit in CTRL_CORE_SMA_SW_14 and CTRL_CORE_SMA_SW_15 has to be set to 0x1.

Note

A serializer AXR data pin is shared between the transmit and receive logic of that serializer. The direction of data is determined in the MCASP_PDIR and the function (Tx or Rx) is selected in the corresponding serializer control register MCASP_XRSRCTLn.

11.5.1.2.2 Protocols and Data Formats

11.5.1.2.2.1 Protocols Supported

The McASP supports a wide variety of protocols:

- Transmit section supports:
  - Wide variety of I2S and similar bit-stream formats.
  - TDM streams from 2 to 32 time slots.
  - S/PDIF, IEC60958-1, AES-3 formats.
- Receive section supports:
  - Wide variety of I2S and similar bit-stream formats.
  - TDM streams from 2 to 32 time slots.
  - TDM stream of 384 time slots specifically designed for easy interface to external digital interface receiver (DIR) device transmitting DIR frames to McASP using the I2S protocol (one time slot for each DIR subframe).

The transmit and receive sections of the module may be individually programmed to support the following options on the basic serial protocol:

Copyright © 2025 Texas Instruments Incorporated

- Programmable clock and frame sync polarity (rising or falling edge): ACLKR/X, AHCLKR/X, and AFSR/X.
- Slot length (number of bits per time slot): 8, 12, 16, 20, 24, 28, 32 bits supported.
- Word length (bits per word): 8, 12, 16, 20, 24, 28, 32 bits; always less than or equal to the time slot length.
- First-bit data delay: 0, 1, 2 bit clocks.
- Left/right alignment of word inside slot.
- Bit order: MSB first or LSB first.
- Bit mask/pad/rotate function.
  - Automatically aligns data internally in either Q31 or integer formats.
  - Automatically masks nonsignificant bits (sets to 0, 1, or extends value of another bit).

Note

In I2S mode, the transmit and receive sections can support simultaneous transfers on up to all serial data pins operating as 192 kHz stereo channels.

In DIT mode for McASP, additional features of the transmitters are:

- Transmit-only mode 384 time slots (subframe) per frame.
- Biphase encoded LVCMOS output
- Channel status RAM (384 bits).
- User data RAM (384 bits).
- Separate valid bit (V) for subframe A, B.
- Stereo Support Only (Mono means send data 2x via software)

In DIT mode, the transmitter can support a 192 kHz frame rate (stereo) on up to all serial data pins simultaneously (note that the internal bit clock for DIT runs two times faster than the equivalent bit clock for I2S mode, due to the need to generate Biphase Mark Encoded Data).

Note

The McASP does NOT natively support DIR-mode reception (i.e. receiving in the S/PDIF format). To allow this, the McASP can use a DIR-input to I2S-output converter implemented by an external device (i.e. external DIR component). To facilitate reception in this case, the TDM mode of McASP receivers logic is extended to support a non-standard 384-slot TDM stream.

Note

An external transceiver must be connected to the McASP port in the device to translate the electrical signals delivered by the McASP (1.2 V or 1.8 V LVCMOS levels) to the electrical levels of the S/PDIF standard.

11.5.1.2.2.2 Definition of Terms

The serial bitstream transmitted or received by a McASP serializer is a long sequence of 1s and 0s on an audio transmit/receive pins AXRn. However, the sequence has a hierarchical organization that can be described in terms of frames of data, slots, words, and bits.

A basic synchronous serial interface consists of three important components: clock, frame sync, and data. Figure 11-327 shows two of the three basic components: the clock signal (ACLKX/ACLKR) and the data signals AXRn. Figure 11-327 does not specify whether the clock is for transmit (ACLKX) or receive (ACLKR) because the definitions of terms apply to both receive and transmit interfaces. In operation, each transmitter and receiver uses the signals ACLKX and ACLKR as serial clock, respectively. Optionally, a receiver can use ACLKX as the serial clock when a transmitter and receiver (not from the same serializer) of the McASP are configured to operate synchronously.

- Bit:

Copyright © 2025 Texas Instruments Incorporated

A bit is the smallest entity in the serial data stream. The beginning and end of each bit is marked by an edge of the serial clock. The duration of a bit is a serial clock period. A '1' is represented by a logic high on AXRn pins for the entire duration of the bit. A 0 is represented by a logic low on an AXRn pin for the entire duration of the bit.

- Word:

  A word is a group of bits that make up the data being transferred between the McASP and the external device. Figure 11-327 shows an 8-bit word.

- Slot:

  A slot consists of the bits that make up the word and can consist of additional bits used to pad the word to a convenient number of bits for the interface between the McASP and the external device. In Figure 11-327, the audio data consists of only 8 bits of useful data (8-bit word), but it is padded with four 0s (12-bit slot) to satisfy the desired protocol in interfacing to an external device. Within a slot, the bits can be shifted out of the McASP on an AXRn pin with either MSB or LSB first.

  When the word size is smaller than the slot size, the word can be aligned to the left of the slot (beginning) or to the right of the slot (end). The additional bits in the slot not belonging to the word can be padded with 0, 1, or with one of the bits (typically, the MSB or LSB) from the data word, i.e. left-aligned words within a slot are terminated with padding bits and right-aligned words within a slot are preceded by padding bits to fit in the slot size. Figure 11-328 shows these options.

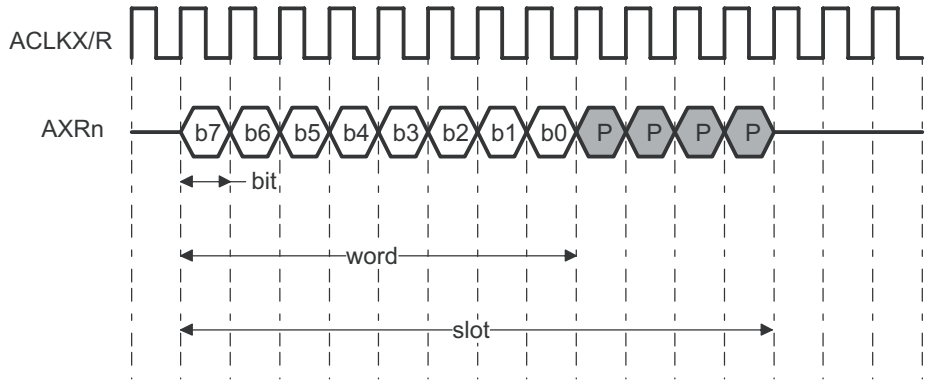

(1) b7:b0 - bits. Bits b7 to b0 form a word.

(2) P - pad bits. Bits b7 to b0, together with the 4 pad bits, form a slot.

(3) In this example, the data is transmitted MSB first, left-aligned.

mcasp-003

Figure 11-327. Definition of Bit, Word, and Slot

Copyright © 2025 Texas Instruments Incorporated

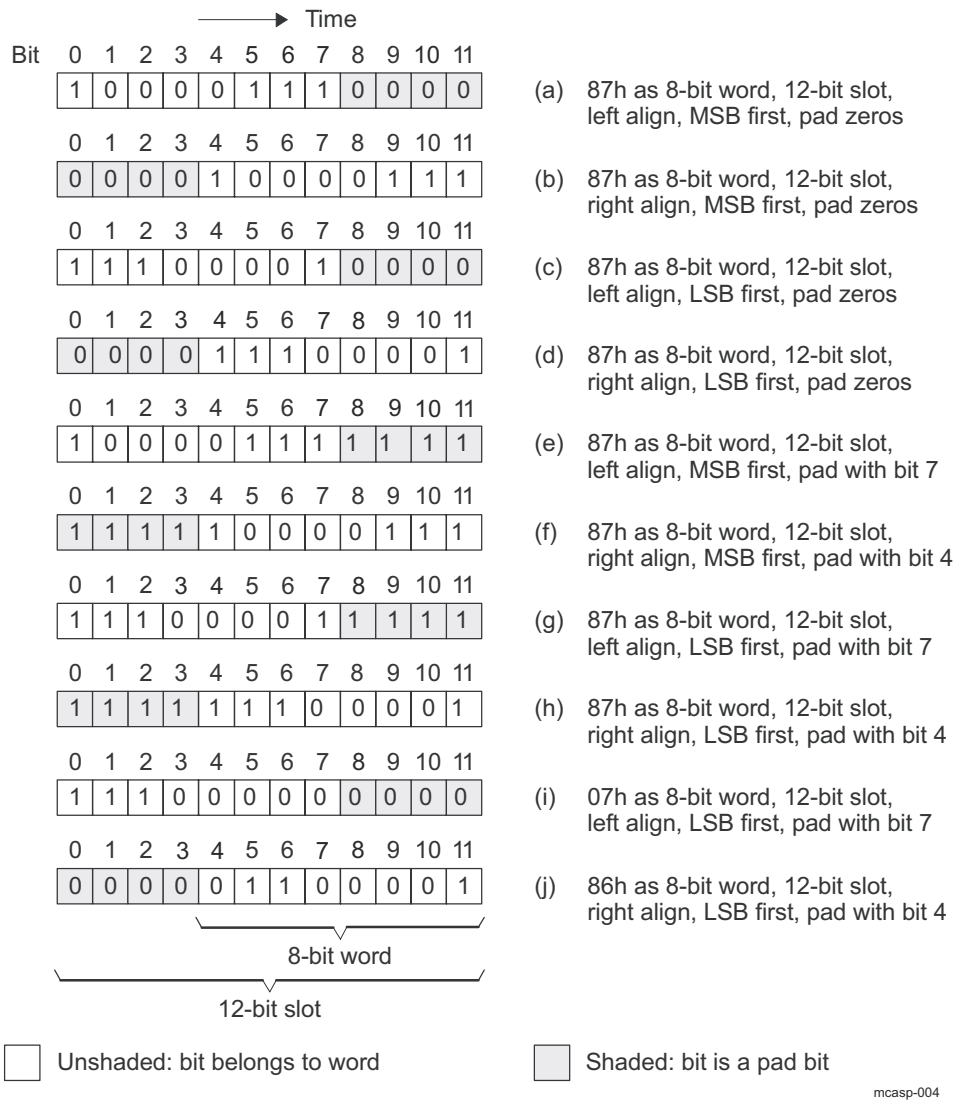

Figure 11-328. Bit Order and Word Alignment Within a Slot Examples

- Frame

  The third basic element of a synchronous serial interface is the frame synchronization signal, also referred to as frame sync in this chapter. A frame contains one or multiple slots, as determined by the desired protocol. Figure 11-329 shows an example frame of data and the frame definitions. In operation, the transmitter uses AFSX, and the receiver - AFSR signal. Figure 11-329 does NOT specify whether the frame sync (FS) is for transmit (AFSX) or receive (AFSR) because the definitions of terms apply to both receive and transmit interfaces. In operation, each transmitter/receiver uses AFSX/AFSR as a frame synchronization signal, respectively. Optionally, the receiver can use AFSX as the frame sync when the transmitter and receiver of the McASP are configured to operate synchronously. This example shows two slots in a frame (I2S format) and a frame-sync (FS) duration of a slot length.

  This section shows only the generic definition of the frame sync. For more information about the frame-sync formats required for the transfer modes and protocols (TDM-mode and DIT-mode supported formats), see Section 11.5.1.2.2.3, *TDM Format* and Section 11.5.1.2.2.5, *S/PDIF-Coding Format*.

Copyright © 2025 Texas Instruments Incorporated

Note

All of the McASP serializers share the same, device pad accessible, clock and frame signals, as follows:
– AHCLKX, ACLKX, and AFSX for the transmitting section
– ACLKR and AFSR for the receiving section

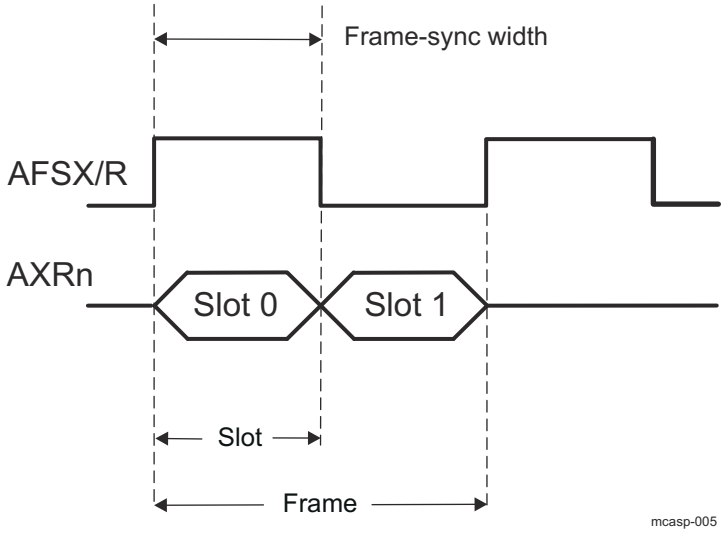

Figure 11-329. Definition of Frame and Frame-Sync Width

The following terms are used throughout this chapter:

- TDM: Time-division multiplexed. See Section 11.5.1.2.2.3 for details on the TDM protocol
- I2S: Inter-Integrated Sound protocol, commonly used on audio interfaces. The McASP supports the I2S protocol as part of the TDM mode (when configured as a 2-slot frame).
- DIT: Digital audio interface transmit. The McASP supports transmitting in S/PDIF format on each AXRn data pin.
- DIR: Digital audio interface receive. The McASP does NOT natively support receiving in S/PDIF format on AXRn data pins and requires an external DIR-to-TDM or DIR-to-I2S converter chip for a DIR-frame reception.
- Slot or time slot: For DIT/DIR format, a McASP time slot corresponds to a DIT/DIR subframe.

11.5.1.2.2.3 TDM Format

The TDM format is used to transfer data between the host CPU and one or more analog-to-digital converter (ADC), digital-to-analog converter (DAC), or S/PDIF receiver (DIR) devices. An example for a 6-slot (channel) TDM transmission on one McASP data pin - AXRn is illustrated on Figure 11-330.

Copyright © 2025 Texas Instruments Incorporated

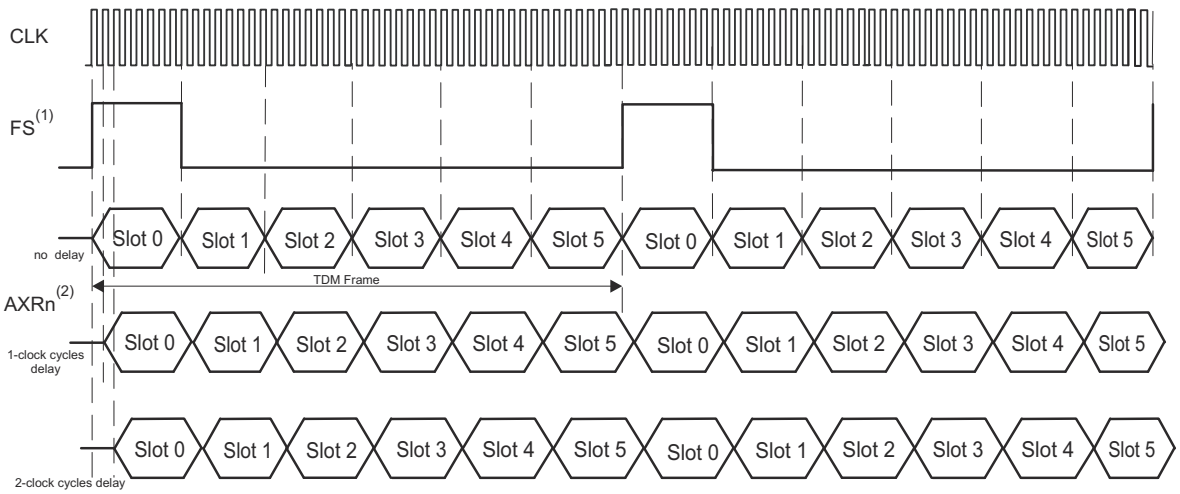

(1) - Frame sync duration of 1 slot - length is shown. A single bit - duration of FS is also supported

(2) - Slot 0 of AXRn stream is being offset with 0-, 1-, and 2- clock cycle delay from the frame sync, respectively.

mcasp-006

Figure 11-330. TDM Format - 6 channel example

The TDM format uses three signals In a basic synchronous serial interface: data (AXRn), clock (CLK) and frame sync (FS). The data signal present on AXRn pin is fully synchronous to the serial clock (ACLKX or ACLKR). The data bits are grouped into words and slots (see also Section 11.5.1.2.2.2), the latter being also refered to as the "time-slots" or "channels" in TDM terminology. A frame consists of multiple time-slots. Each TDM frame is marked by the frame sync signal (AFSX or AFSR). The TDM transfer is continuous and periodic, with no delays between slots.

Within a certain frame, the last bit of slot N is followed immediately on the next serial clock with the first bit of the next slot N+1. On the boundary between two adjacent TDM-frames, the last bit of the last slot from the frame M, is followed immediately on the next clock cycle with the first bit of the first slot from the next frame M+1. For McASP, there is an option to offset the first bit of the first slot with a 0-,1- or 2-cycle delay from the frame sync signal.

The frame sync - AFSX/AFSR only marks the beginning of slot 0 and start of a new frame. Since it does not determine the boundaries of a slot, there is a requirement for a connected transmitter and receiver to agree on the number of transferred bits per slot.

In a typical audio system involving McASP module, a single TDM data frame is transferred during each sample period Ts of a data converter. The user has following choices to implement multiple channels:

- Use more data slots (on a price of higher speed serial clock) per frame transmitted/received on just one of the available McASP data pins AXRn.
- Use less number of slots per TDM frame (requires a slower serial clock), making them available on several of the McASP pins AXRn.

11.5.1.2.2.4 I2S Format

The TDM transfer mode of the McASP supports the I2S format when frame is configured to have 2 slots. I2S format is specifically designed to transfer a stereo channel (left and right) over a single data pin AXRn. "Slots" are also commonly referred to as "channels". The frame width duration in the I2S format equals size of a slot. The frame signal is also referred to as "word select" in the I2S format.

The I2S protocol is illustrated on Figure 11-331.

Copyright © 2025 Texas Instruments Incorporated

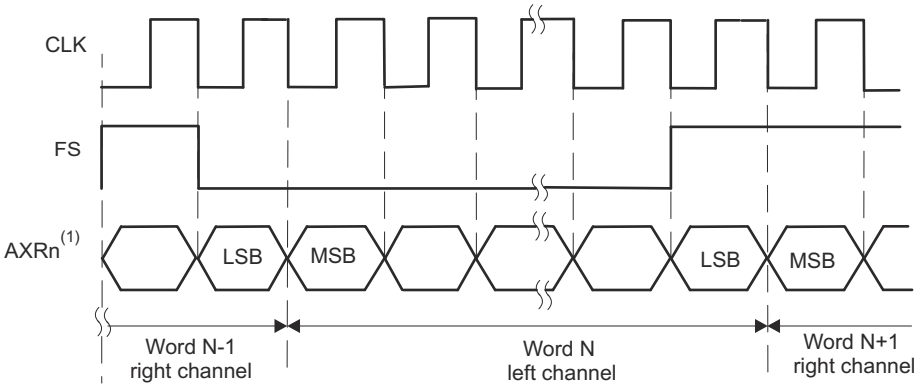

(1) - The example shows I2S data MSB-first transmission with 1-clock cycle delay between FS and data MSB

mcasp-036

Figure 11-331. I2S Format Overview

11.5.1.2.2.5 S/PDIF Coding Format

The McASP transmitter supports the S/PDIF format with 3.3V biphase-mark encoded output. The S/PDIF format is supported by the DIT- transfer mode of the McASP. This section briefly discusses the S/PDIF coding format.

Note

The DIR- reception of S/PDIF format frames is NOT natively supported from the device McASP. For this purpose, an external DIR-to-TDM transfer mode adapter can be used between the remote device S/PDIF transmitter output and the McASP TDM-only compatible receiver input.

11.5.1.2.2.5.1 Biphase-Mark Code

In S/PDIF format, the digital signal is coded using the biphase-mark code (BMC). For each serializer transmitter n, the clock, frame, and data are embedded in only one signal - the data signal AXRn. In the BMC system, each data bit is encoded into two logical states (00, 01, 10, or 11) at the pin. These two logical states form a cell. The duration of the cell, which equals the duration of the data bit, is called a time interval. A logical 1 is represented by two transitions of the signal within a time interval, which corresponds to a cell with logical states 01 or 10. A logical 0 is represented by one transition within a time interval, which corresponds to a cell with logical states 00 or 11. In addition, the logical level at the start of a cell is inverted from the level at the end of the previous cell. Figure 11-332 and Table 11-1334 show how data is encoded to the BMC format.

As shown in Figure 11-332, the clock frequency is twice the unencoded data bit rate. In addition, the clock is always programmed to 128 × f_s, where f_s is the sample rate (see Section 11.5.1.2.2.5.3, *Frame Format*, for details on how this clock rate is derived based on the S/PDIF format). The device receiving in S/PDIF format can recover the clock and frame information from the BMC signal.

Copyright © 2025 Texas Instruments Incorporated

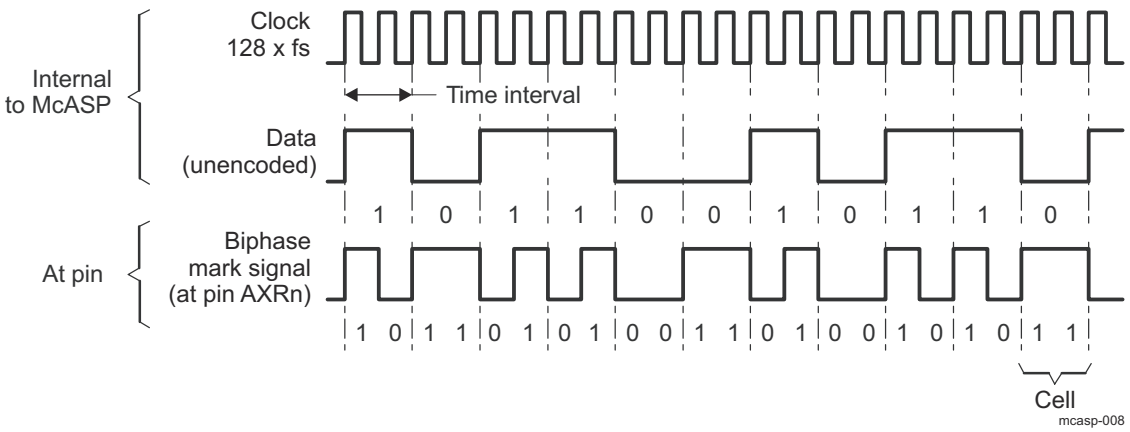

Figure 11-332. Biphase-Mark Code

Table 11-1334. Biphase-Mark Encoder

Data (Unencoded)	Previous State at Pin AXRn	BMC-Encoded Cell Output at Pin AXRn
0	0	11
0	1	00
1	0	10
1	1	01

11.5.1.2.2.5.2 S/PDIF Subframe Format

Every audio sample transmitted in a subframe consists of 32 S/PDIF time intervals (or cells), numbered 0 to 31. Figure 11-333 shows a subframe.

- Time intervals 0–3 carry one of the three permitted preambles to signify the type of audio sample in the current subframe. The preamble is not encoded in BMC format, and therefore the preamble code can contain more than two consecutive 0 or 1 logical states in a row. See Table 11-1335.
- Time intervals 4–27 carry the audio sample word in linear 2s-complement representation. The MSB is carried by time interval 27. When a 24-bit coding range is used, the LSB is in time interval 4. When a 20-bit coding range is used, time intervals 8-27 carry the audio sample word with the LSB in time interval 8. Time intervals 4–7 may be used for other applications and are designated auxiliary sample bits.
- If the source provides fewer bits than the interface allows (20 or 24), the unused LSBs are set to logical 0. For a nonlinear PCM audio application or a data application, the main data field can carry any other information.
- Time interval 28 carries the validity bit (V) associated with the main data field in the subframe.
- Time interval 29 carries the user data channel (U) associated with the main data field in the subframe.
- Time interval 30 carries the channel status information (C) associated with the main data field in the subframe. The channel status indicates if the data in the subframe is digital audio or some other type of data.
- Time interval 31 carries a parity bit (P) such that time intervals 4–31 carry an even number of 1s and an even number of 0s (even parity). As listed in Table 11-1335, the preambles (time intervals 0–3) are also defined with even parity.

Copyright © 2025 Texas Instruments Incorporated

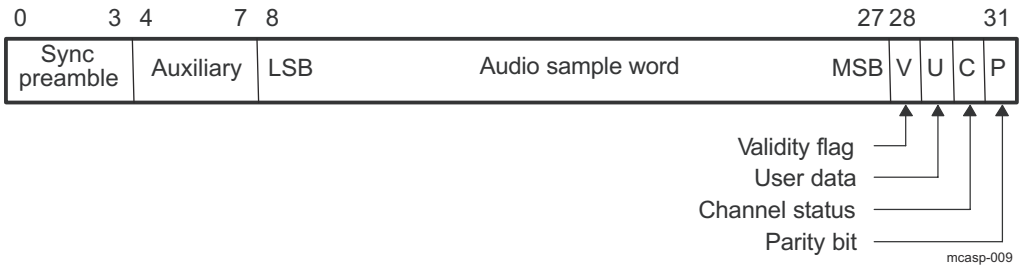

Figure 11-333. S/PDIF Subframe Format

As listed in Table 11-1335, the McASP DIT generates only one polarity of preambles, and it assumes the previous logical state is 0. This is because the McASP assures an even-polarity encoding scheme when transmitting in DIT mode. If an underrun condition occurs, the DIT resynchronizes to the correct logic level on the AXRn pin before continuing with the next transmission.

Table 11-1335. Preamble Codes

Preamble Code(1)	Previous Logical State	Logical States on pin AXRn(2)	Description
B (or Z)	0	1110 1000	Start of a block and subframe 1
M (or X)	0	1110 0010	Subframe 1
W (or Y)	0	1110 0100	Subframe 2

(1) Historically, preamble codes are referred to as B, M, and W. For use in professional applications, preambles are referred to as Z, X, and Y, respectively.
(2) The preamble is not BMC-encoded. Each logical state is synchronized to the serial clock. These eight logical states make up time slots (cells) 0 to 3 in the S/PDIF stream.

11.5.1.2.2.5.3 Frame Format

An S/PDIF frame is composed of two subframes (see Figure 11-334). For linear coded audio applications, the rate of frame transmission normally corresponds exactly to the source sampling frequency f_s. The S/PDIF format clock rate is therefore 128 × f_s (128 = 32 cells per subframe × 2 clocks per cell × 2 subframes per sample). For example, for an S/PDIF stream at a 192-kHz sampling frequency, the serial clock is 128 × 192 kHz = 24.58 MHZ.

In 2-channel operation mode, the samples taken from both channels are transmitted by time multiplexing in consecutive subframes. Both subframes contain valid data (cell 28 validity bits for A- and B- channels, both set to '0'). The first subframe (left or A channel in stereophonic operation and primary channel in monophonic operation) normally starts with preamble M. However, the preamble of the first subframe changes to preamble B once every 192 frames to identify the start of the block structure used to organize the channel status information. The second subframe (right or B channel in stereophonic operation and secondary channel in monophonic operation) always starts with preamble W.

In single-channel operation mode in a professional application, the frame format is the same as in the 2-channel mode. Data is carried in the first subframe and may be duplicated in the second subframe. If the second subframe is not carrying duplicate data, cell 28 (validity bit) is set to logical 1.

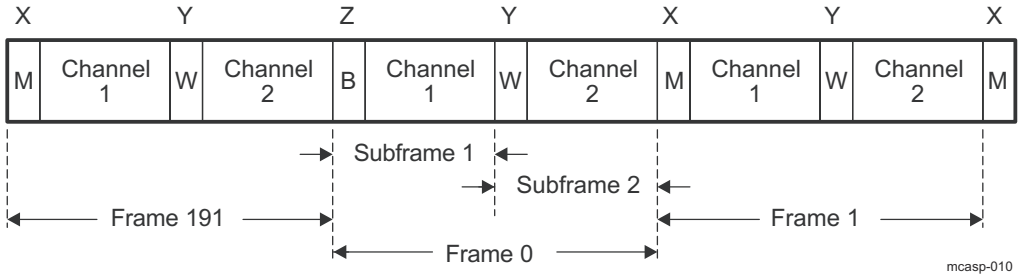

Figure 11-334. S/PDIF Frame Format

Copyright © 2025 Texas Instruments Incorporated

11.5.1.3 McASP Integration

This section describes module integration in the device, including information about clocks, resets, and hardware requests.

McASP module includes the following features:

- Slave idle protocol
- One DMA request for transmit event
- One DMA request for receive event
- One interrupt request (IRQ) for transmit
- One interrupt request (IRQ) for receive

Figure 11-335 shows McASP integration.

Copyright © 2025 Texas Instruments Incorporated

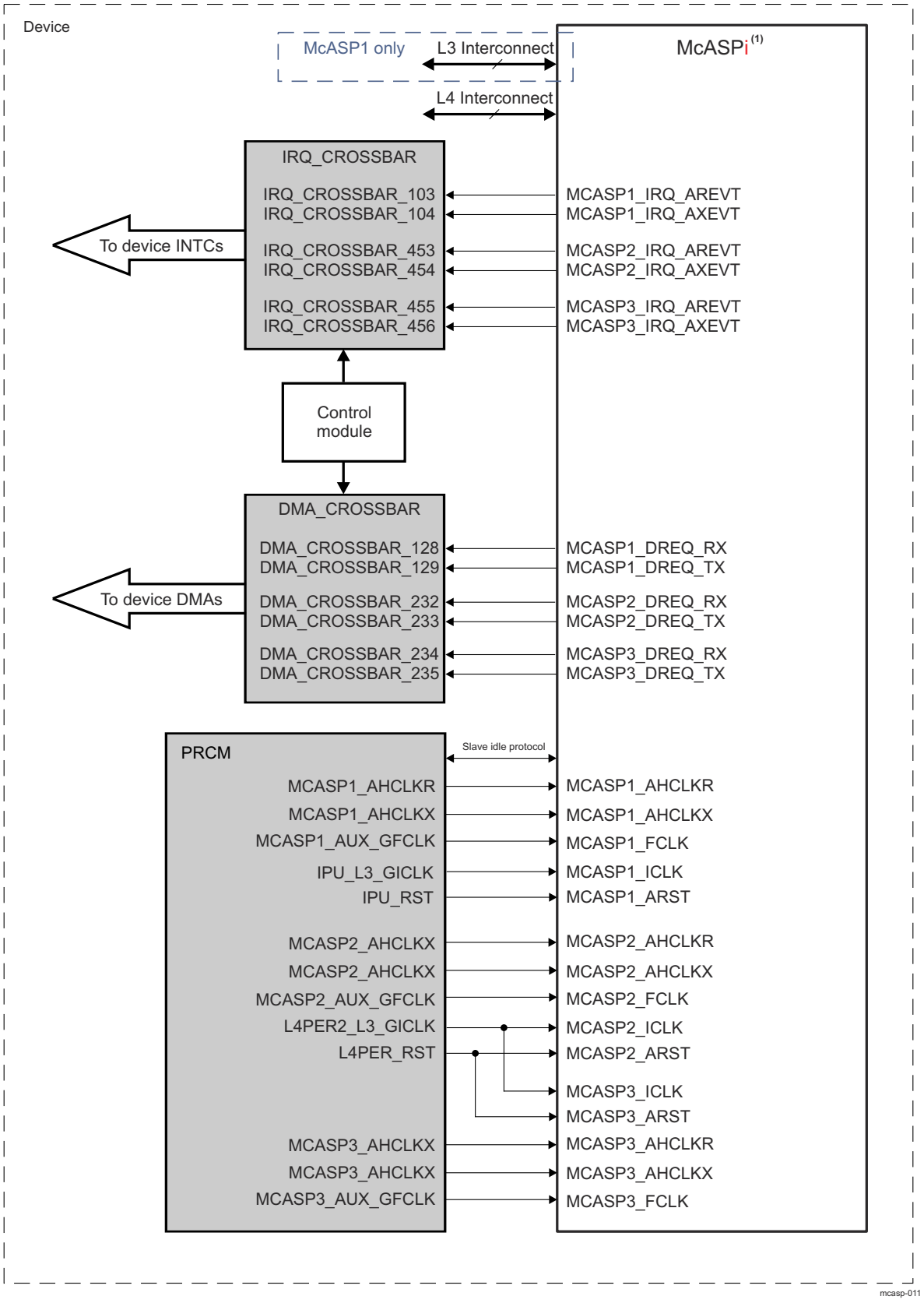

A. i = 1 to 3

Figure 11-335. McASP Integration

Copyright © 2025 Texas Instruments Incorporated

Note

For more information about the slave idle protocol, see *Module Level Clock Management* in *Power, Reset, and Clock Management*.

Table 11-1336 through Table 11-1338 summarize McASP integration in the device.

Table 11-1336. McASP Integration Attributes

Module Instance	Attributes		
	Power Domain	Wake-Up Capability	Interconnect
McASP1	PD_COREAON	No	L3_MAIN L4_PER2
McASP2	PD_COREAON	No	L4_PER2
McASP3	PD_COREAON	No	L4_PER2

Table 11-1337. McASP Clocks and Resets

Clocks				
Module Instance	**Destination Signal Name**	**Source Signal Name**	**Source**	**Description**
McASP1	MCASP1_AHCLKR	MCASP1_AHCLKR	PRCM	McASP1 AHCLKR receive high-frequency master clock
	MCASP1_AHCLKX	MCASP1_AHCLKX		McASP1 AHCLKX transmit high-frequency master clock
	MCASP1_FCLK	MCASP1_AUX_GFCLK		McASP1 functional clock
	MCASP1_ICLK	IPU_L3_GICLK		McASP1 interface clock
McASP2	MCASP2_AHCLKR	MCASP2_AHCLKX	PRCM	McASP2 AHCLKR receive high-frequency master clock
	MCASP2_AHCLKX	MCASP2_AHCLKX		McASP2 AHCLKX transmit high-frequency master clock
	MCASP2_FCLK	MCASP2_AUX_GFCLK		McASP2 functional clock
	MCASP2_ICLK	L4PER2_L3_GICLK		McASP2 interface clock
McASP3	MCASP3_AHCLKR	MCASP3_AHCLKX	PRCM	McASP3 AHCLKR receive high-frequency master clock
	MCASP3_AHCLKX	MCASP3_AHCLKX		McASP3 AHCLKX transmit high-frequency master clock
	MCASP3_FCLK	MCASP3_AUX_GFCLK		McASP3 functional clock
	MCASP3_ICLK	L4PER2_L3_GICLK		McASP3 interface clock
Resets				
McASP1	MCASP1_ARST	IPU_RST	PRCM	McASP1 reset
McASP2	MCASP2_ARST	L4PER_RST	PRCM	McASP2 reset
McASP3	MCASP3_ARST	L4PER_RST	PRCM	McASP3 reset

Table 11-1338. McASP Hardware Requests

DMA Requests				
Module Instance	**Source Signal Name**	**Destination DMA_CROSSBAR Input**	**Default Mapping**	**Description**
McASP1	MCASP_DREQ_RX	DMA_CROSSBAR_128	DMA_DSP1_DREQ_0	McASP module receive event request
	MCASP_DREQ_TX	DMA_CROSSBAR_129	DMA_DSP1_DREQ_1	McASP module transmit event request
McASP2	MCASP2_DREQ_RX	DMA_CROSSBAR_232	-	McASP2 module receive event request
	MCASP2_DREQ_TX	DMA_CROSSBAR_233	-	McASP2 module transmit event request

Copyright © 2025 Texas Instruments Incorporated

Table 11-1338. McASP Hardware Requests (continued)

McASP3	MCASP3_DREQ_RX	DMA_CROSSBAR_234	-	McASP3 module receive event request
	MCASP3_DREQ_TX	DMA_CROSSBAR_235	-	McASP3 module transmit event request

Note

The **Default Mapping** column in Table 11-1338 *McASP Hardware Requests* shows the default mapping of module IRQ and DREQ source signals. These module IRQ and DREQ source signals can also be mapped to other lines of each device Interrupt or DMA controller through the DMA_CROSSBAR modules, respectively.
For more information about the DMA_CROSSBAR module, see *DMA_CROSSBAR Module Functional Description*, in *Control Module*.
For more information about the device interrupt controllers, see *Interrupt Controllers*.
For more information about the device DSP1_EDMA , see *DSP Integrated EDMA Subsystem*.

Note

- For the description of the interrupt source, see Section 11.5.1.4.12, *McASP Events and Interrupt Requests*.
- For the description of the DMA source, see Section 11.5.1.4.13, *DMA Requests*.

Copyright © 2025 Texas Instruments Incorporated

11.5.1.4 McASP Functional Description

In the text throughout this section a single instance of McASP is described assuming that all modules are functionally identical. For module availability and integration differences, see Section 11.5.1.2, *McASP Environment*, and Section 11.5.1.3, *McASP Integration*

11.5.1.4.1 McASP Block Diagram

Figure 11-336 shows the major blocks of the McASP module. McASP1 has 16 serializers , and McASP2 and McASP3 have 6 serializers each. The serializers share a clock and frame-sync generator, format unit, and error-checking logic independently for the receive and transmit part.

Copyright © 2025 Texas Instruments Incorporated

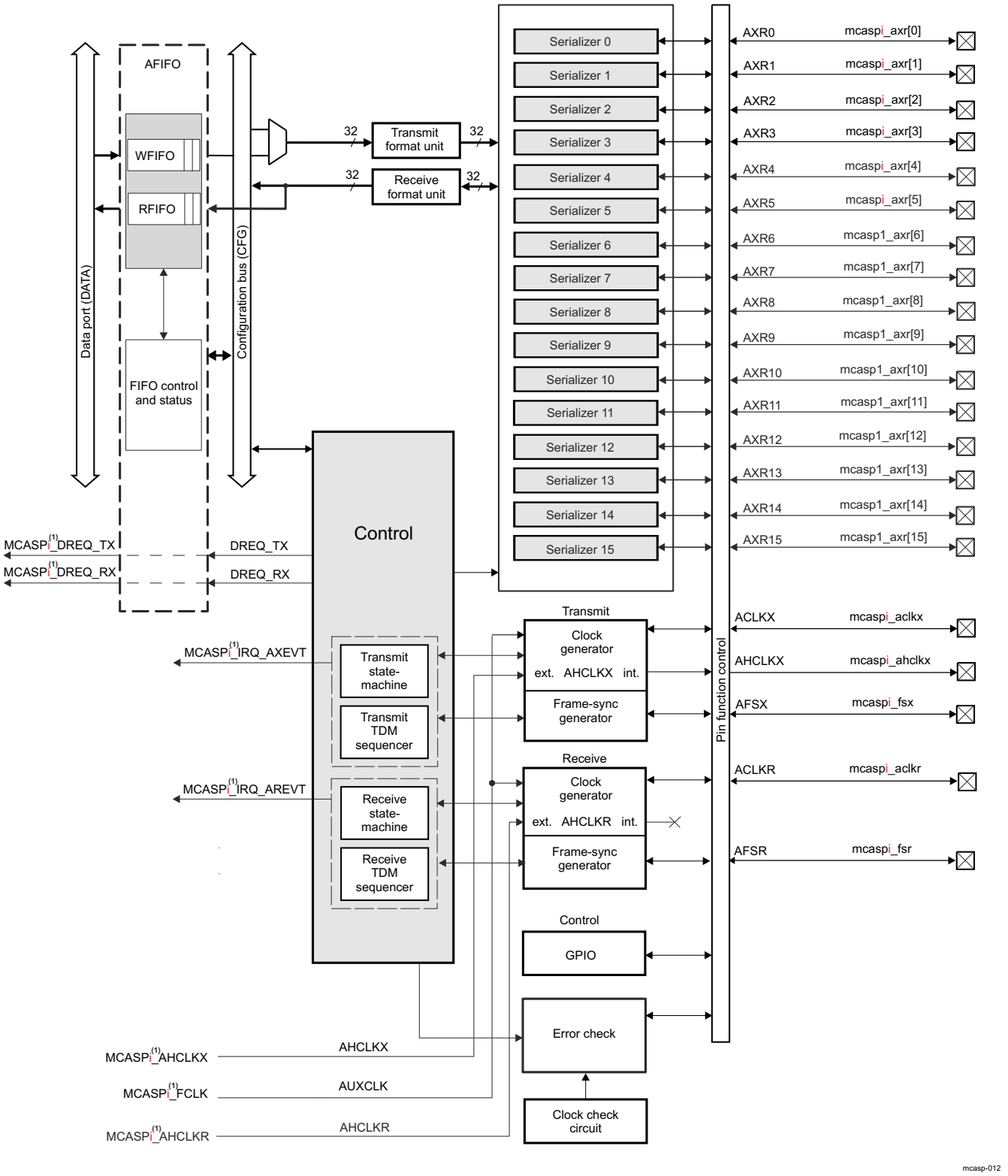

A. i = 1 to 3

Figure 11-336. McASP Module Block Diagram

Copyright © 2025 Texas Instruments Incorporated

Note

The internal and external clocks mentioned in this section are with respect to clock and frame-sync generator modules.

11.5.1.4.2 McASP Clock and Frame-Sync Configurations

There are three scenarios to provide clock source signals for the Tx part and four scenarios for the Rx part of the McASP serializers. The first three scenarios are identical between the Tx and Rx part of the McASP. They feature an asynchronous operation between receiver and transmitter channels using independent Tx/Rx bit rate clock sources (either internal or external).

In the first scenario, the transmit - XCLK and receive - RCLK serial clocks (clock at the bit rate) are generated internally by passing through a couple of clock dividers off the internal functional clock source (AUXCLK). In this case, the bit rate clock is generated internally and is driven out on the pin ACLKX for the Tx part and pin ACLKR for the Rx part, respectively. An internally generated high-frequency clock can be optionally driven out onto the AHCLKX pin for the Tx part to serve as a reference clock for other components in the system.

In the second scenario, an external for the device clock, is passed on the ACLKX (for the TX part) and ACLKR (for the RX part) pins which are configured as inputs. In this case the Rx- /Tx- high-speed clock logic is bypassed for the XCLK/RCLK generation.

In the third (mixed) scenario, an externally driven (master) high-frequency clock is applied on the AHCLKX (for the TX part) pin, which is configured as input. In this case the AHCLKX clock frequency can be divided down via programming the ACLKX associated divider to produce the necessary bit rate clock. The high-speed clock divider can NOT be used.

In the fourth clock generation scenario the bit rate clock for McASP receivers - RCLK is derived from the bit rate clock of the McASP transmitters - XCLK for a synchronous operation between transmitters and receivers. Hence, the whole receiver clock generator logic is bypassed.

A typical role of the McASP frame sync signal is to carry the left/right clock (LRCLK) signal when transmitting and receiving stereo data.

For an asynchronous operation, the AFSX (Tx part) and AFSR (Rx part) frame synchronization signals can be sourced internally or delivered externally independently for the Tx and Rx channels. During synchronous operation the receive frame sync - AFSR signal is derived from the transmit frame sync - AFSX signal. A synchronous and asynchronous mode applies to bit rate clock and frame sync signals at the same time.

11.5.1.4.2.1 McASP Transmit Clock

The transmit high-speed and transmit clock configuration is controlled by the following registers:

- MCASP_ACLKXCTL
- MCASP_AHCLKXCTL

In case, the transmit bit clock, ACLKX, is generated internally, the MCASP_ACLKXCTL[5] CLKXM bit must be set to 1. Thus, the clock is divided down by a programmable bit clock divider (the MCASP_ACLKXCTL[4:0] CLKXDIV bit field) from the source signal.

If the transmit high-frequency master clock, AHCLKX, is also sourced internally (that is first scenario described in Section 11.5.1.4.2, the MCASP_AHCLKXCTL[15] HCLKXM bit must be set to 1. Thus, the clock is divided down by a programmable high-clock divider (the MCASP_ACLKXCTL[11:0] HCLKXDIV bit field) from the McASP internal clock source AUXCLK.

Internally, the McASP always shifts transmit data at the rising edge of the internal transmit clock - XCLK, (see Figure 11-337). The CLKXP mux determines if ACLKX needs to be inverted to become XCLK. If MCASP_ACLKXCTL[7] CLKXP = 0, the CLKXP mux directly passes ACLKX signal to XCLK. As a result, the McASP shifts transmit data at the rising edge of ACLKX. If MCASP_ACLKXCTL[7] CLKXP = 1, the CLKX mux passes the inverted version of ACLKX to XCLK. As a result, the McASP shifts transmit data at the falling edge of ACLKX.

Copyright © 2025 Texas Instruments Incorporated

It can be seen in Figure 11-337 that XCLK is propagated to the Rx clock logic, to allow an internally synchronous operation between McASP transmitters and receivers. This is used for example in the McASP loopback mode.

Note

The polarity of ACLKX can be controlled in MCASP_ACLKXCTL[7] CLKXP, regardless of ACLKX signal being internally or externally sourced.

In addition, there is an option to invert polarity of the AHCLKX master high speed clock via writing the MCASP_AHCLKXCTL[14] HCLKXP bit.

Note

In a similar way, the polarity of AHCLKX clock can be controlled in MCASP_AHCLKXCTL[14] HCLKXP, regardless of the AHCLKX signal being internally or externally sourced.

Figure 11-337 is the block diagram of the transmit clock generator.

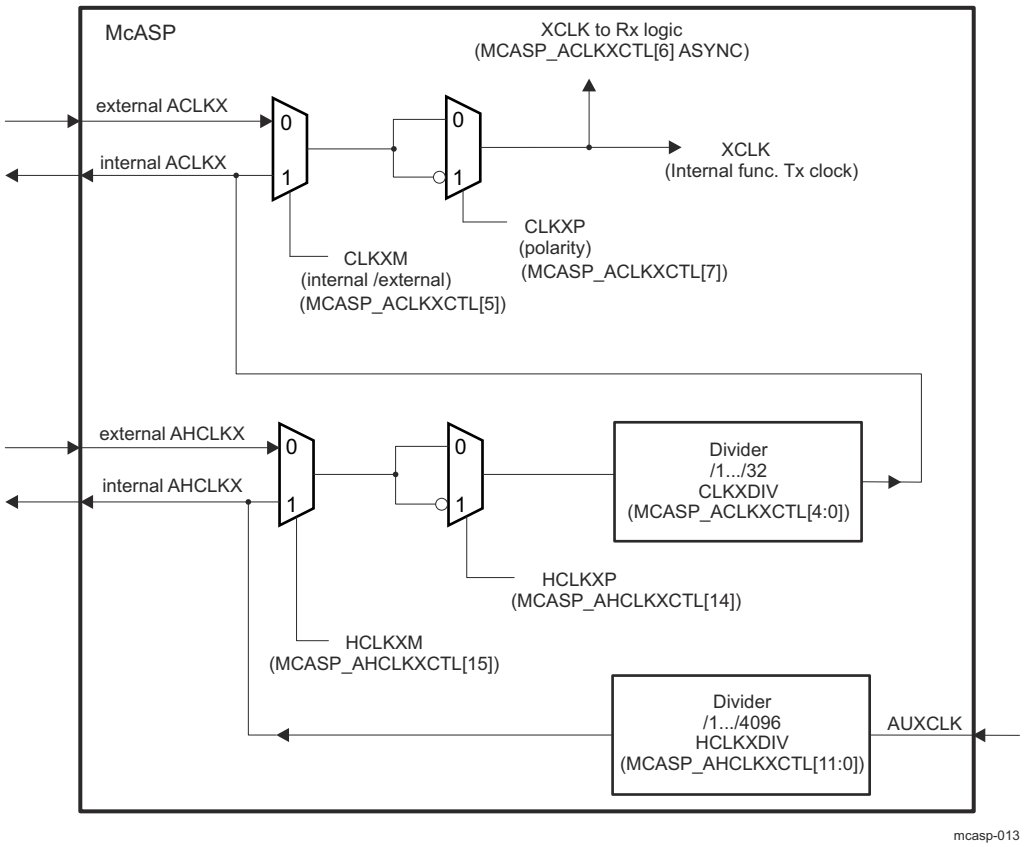

Figure 11-337. Transmit Clock Generator Block Diagram

Copyright © 2025 Texas Instruments Incorporated

Note

In this device:

- ACLKX is mapped on the device ball mcaspi_aclkx, where i = 1 to 3
- internal AHCLKX is mapped on the device ball mcaspi_ahclkx
- external AHCLKX is mapped on MCASPi_AHCLKX clock from the PRCM

For more on McASP integration, see Section 11.5.1.2, *McASP Environment*, and Section 11.5.1.3, *McASP Integration*.

11.5.1.4.2.2 McASP Receive Clock

The McASP receive clock generator is built on a very similar to the transmit clock generator (but independent) circuit.

The receive clock configuration is controlled by the following registers:

- MCASP_ACLKRCTL
- MCASP_AHCLKRCTL

In case, the receive bit clock, ACLKR, is generated internally (but asynchronously to XCLK), the MCASP_ACLKRCTL[5] CLKRM bit must be set to 1. Thus, the clock is divided down by a programmable bit clock divider (the MCASP_ACLKRCTL[4:0] CLKRDIV bit field) from the source signal.

If the receive high-frequency master clock, AHCLKR, is also sourced internally (that is, first scenario described in Section 11.5.1.4.2) and the MCASP_AHCLKRCTL[15] HCLKRM bit must be set to 1. Thus, the clock is divided down by a programmable high-clock divider (the MCASP_AHCLKRCTL[11:0] HCLKRDIV bit field) from the McASP internal clock source AUXCLK.

Note

The polarity of ACLKR can be controlled in MCASP_ACLKRCTL[7] CLKRP, regardless of ACLKR signal being internally or externally sourced.

In a similar way, the polarity of AHCLKR clock can be controlled in MCASP_AHCLKRCTL[14] HCLKRP, regardless of the AHCLKR signal being internally or externally sourced.

There is an option for the McASP receiver to be configured to operate synchronously to the ACLKX and AFSX signals. The XCLK output of the Tx Clock generator (see Figure 11-337 and Figure 11-338) becomes source of the receive clock (RCLK output), when the MCASP_ACLKXCTL[6] ASYNC bit in the transmit clock control register is set to '0b0'. For more information, refer to Section 11.5.1.4.2.4.

Figure 11-338 is the block diagram of the receive clock generator.

Copyright © 2025 Texas Instruments Incorporated

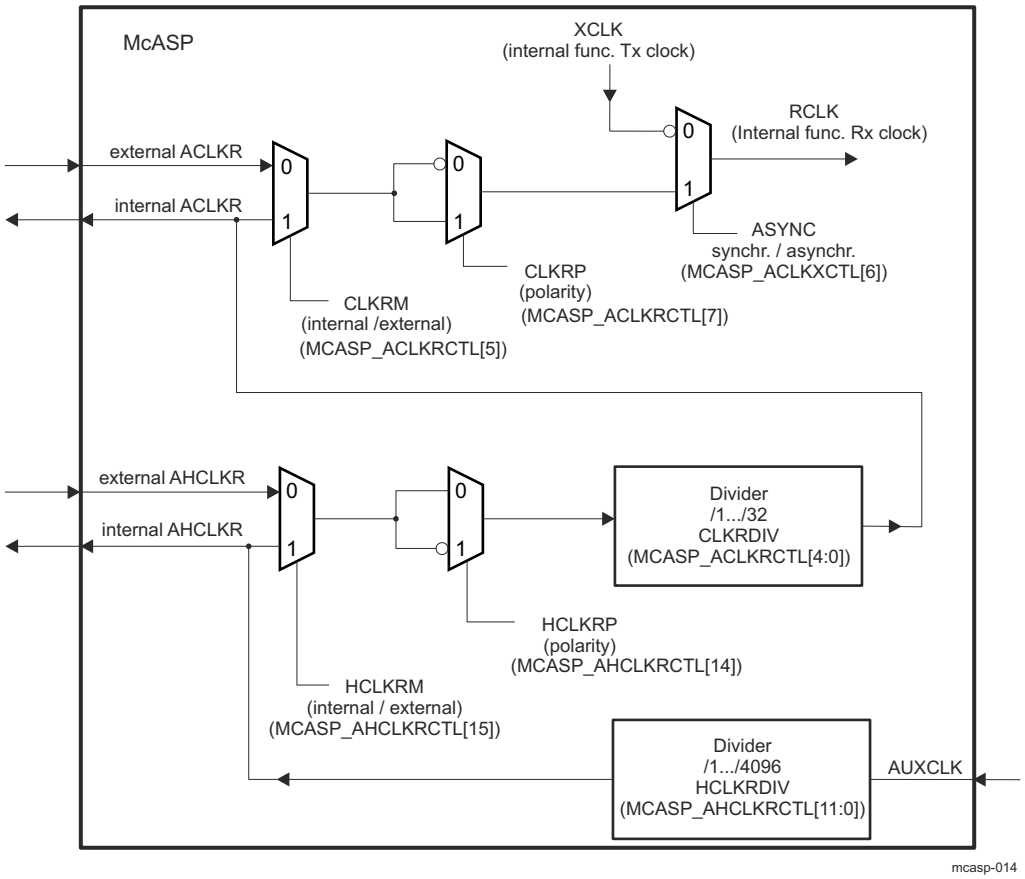

Figure 11-338. Receive Clock Generator Block Diagram

Note

In this device:

- ACLKR is mapped on the device ball mcaspi_aclkr, where i = 1 to 3
- internal AHCLKR is tied-off
- external AHCLKR is mapped on PRCM MCASPi_AHCLKR from PRCM

For more on McASP integration, see Section 11.5.1.2, *McASP Environment*, and Section 11.5.1.3, *McASP Integration*.

11.5.1.4.2.3 Frame-Sync Generator

There are two different modes for frame sync: burst and TDM. The McASP frame sync generator logic is illustrated in Figure 11-339. I/O buffers are not part of the McASP module, and are not shown in the figure.

Copyright © 2025 Texas Instruments Incorporated

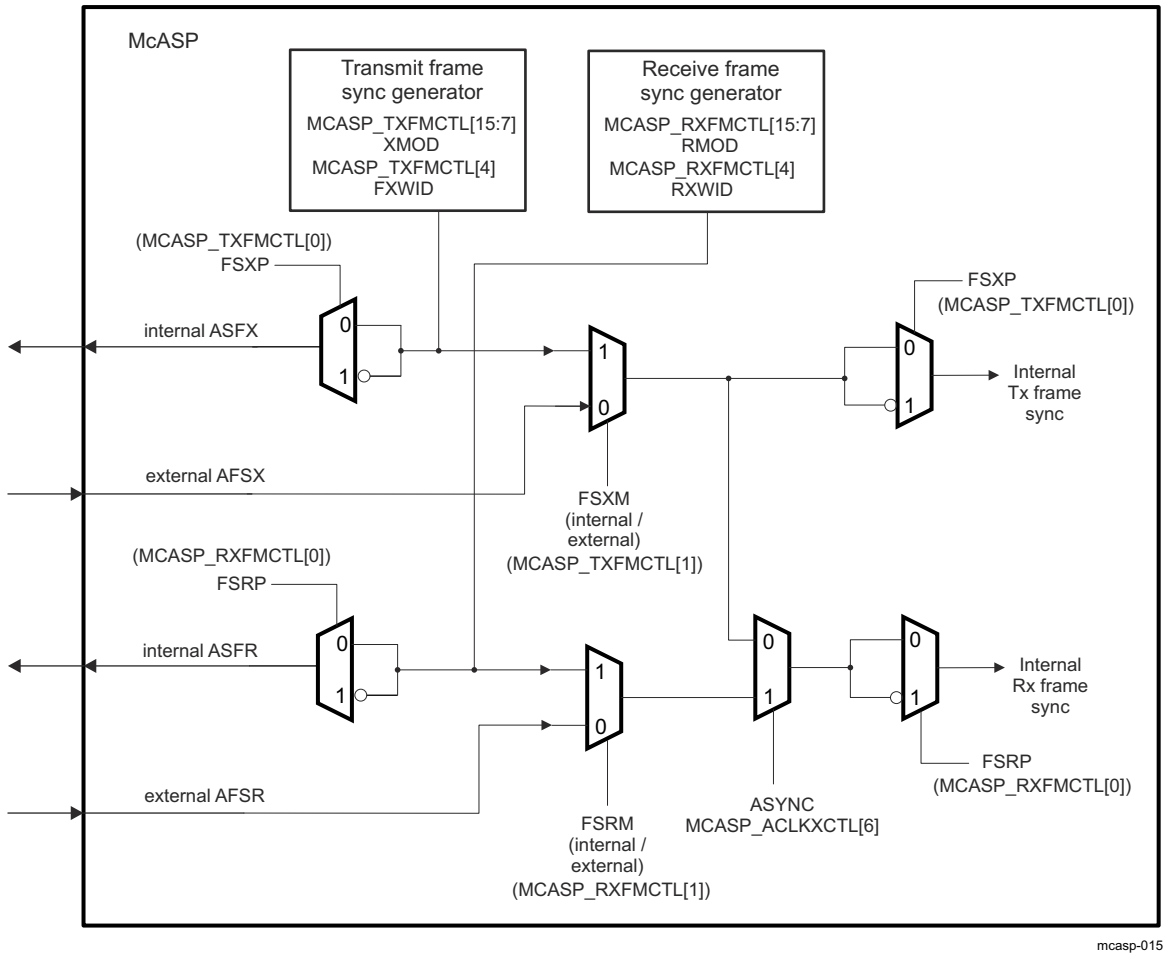

Figure 11-339. Frame Sync Generator Block Diagram

Note

For more on McASP integration, see Section 11.5.1.2, *McASP Environment*, and Section 11.5.1.3, *McASP Integration*.

For the transmit logic, following frame-sync generator configurations can be selected:

- Internally/externally generated frame-sync via configuring bit MCASP_TXFMCTL[1] FSXM
- Frame-sync polarity: Rising edge or falling edge via configuring bit MCASP_TXFMCTL[0] FSXP
- Frame-sync width: "single bit" or "single word" via configuring bit MCASP_TXFMCTL[4] FXWID
- Frame sync mode - the appropriate frame sync generation pattern for the selected transfer mode is defined in the bitfield MCASP_TXFMCTL[15:7] XMOD, as follows:
  - For DIT mode (384 slots) - MCASP_TXFMCTL[15:7] XMOD = 0x180
  - For I2S mode (2 TDM slots) - MCASP_TXFMCTL[15:7] XMOD = 0x2
  - For TDM mode (from 3 to 32 TDM slots) - MCASP_TXFMCTL[15:7] XMOD set in range 0x3 - 0x20
- Bit delay: 0, 1, or 2 cycles before the first data bit. This delay is defined in MCASP_TXFMCTL[17:16] XDATDLY

For the receive logic, following frame-sync generator configurations can be selected:

- Internally/externally generated frame-sync via configuring bit MCASP_RXFMCTL[1] FSRM
- Frame-sync polarity: Rising edge or falling edge via configuring bit MCASP_RXFMCTL[0] FSRP
- Frame-sync width: "single bit" or "single word" via configuring bit MCASP_RXFMCTL[4] FRWID

Copyright © 2025 Texas Instruments Incorporated

- Frame sync mode - the appropriate frame sync generation pattern for the selected transfer mode is defined in the bitfield MCASP_RXFMCTL[15:7] RMOD, as follows:
  - For I2S mode (2 TDM slots) - MCASP_RXFMCTL[15:7] RMOD = 0x2
  - For TDM mode (from 3 to 32 TDM slots) - MCASP_RXFMCTL[15:7] RMOD set in range 0x3 - 0x20
  - For the special 384-slot TDM mode - MCASP_RXFMCTL[15:7] RMOD=0x180
- Bit delay: 0, 1, or 2 cycles before the first data bit. This delay is defined in MCASP_RXFMT[17:16] RDATDLY
- Selecting the source (AFSX or AFSR) of receiver internal frame synchronization. This is done in the same bit - MCASP_ACLKXCTL[6] ASYNC, used to define the receiver internal clock source. For more details, refer to Section 11.5.1.4.2.4.

Regardless of the AFSX/AFSR being internally generated or externally sourced, the polarity of AFSX/AFSR is determined by FSXP/FSRP, respectively, to be either rising or falling edge. If FSXP/FSRP = 0, the frame sync polarity is rising edge. If FSXP/FSRP = 1, the frame sync polarity is falling edge.

Note

Certain restrictions apply to the receive and transmit logic settings, when MCASP_ACLKXCTL[6] ASYNC is set to 0b0. They are described in Section 11.5.1.4.2.4.

11.5.1.4.2.4 Synchronous and Asynchronous Transmit and Receive Operations

Synchronous Transmit and Receive Operations -

When MCASP_ACLKXCTL[6] ASYNC is written to 0b0, the transmit and receive sections operate synchronously to the transmit section clock and transmit frame sync signals.

Though Rx section may have a different data format, it has to be configured to have the same slot size than the transmit section one. As shown on the Figure 11-338, with the ASYNC bit set to 0b0, the RCLK becomes an inverted version of the transmit clock generator XCLK output.

When MCASP_ACLKXCTL[6] ASYNC = 0b0, both Rx and Tx sections use the same clock and frame sync signals. For this reason, they must be aligned on the following settings:
- MCASP_TXDITCTL[0] DITEN = 0 (that is, transmission in TDM mode is enabled)
- The total number of bits per frame must be the same (that is, RSSZ * RMOD product value must equal XSSZ * XMOD product value)
- The settings in MCASP_ACLKRCTL are NOT considered
- FSXM must match FSRM
- FXWID must match FRWID

For all other settings, the transmit and receive sections may be programmed independently.

Asynchronous Transmit and Receive Operations -

When MCASP_ACLKRCTL[6] ASYNC = 0b1, Tx and Rx operate independently from each other with separate clock and frame sync signals.

Note

Synchronous transmit and receive operations are allowed only in the McASP TDM (I2S) mode (i.e. when MCASP_TXDITCTL[0] DITEN=0b0).

11.5.1.4.3 Serializers

The McASP serializers shift serial data in (Rx) and out (Tx) of the McASP. A given serializer n consists of a shift register (XRSRn) with a single-entry data buffer XRBUFn used either for transmitting (write accessible in register MCASP_TXBUFn) or for receiving (read accessible in register MCASP_RXBUFn) data. In addition, each serializer has a dedicated control register (MCASP_XRSRCTLn) and a serial bidirectional data pin - AXRn. The register MCASP_XRSRCTLn allows n-th serializer to be configured as a transmitter, receiver, or as inactive.

Copyright © 2025 Texas Instruments Incorporated

There are transmit and receive data formatting units to support data alignment options of the McASP which are shared between all Tx and Rx serializers, respectively.

A given serializer XRSRn shifter configured as a receiver in MCASP_XRSRCTLn, shifts in data through McASP corresponding device level bidirectional data pad AXRn. A given serializer XRSRn shifter configured as a transmitter in MCASP_XRSRCTLn, shifts out data on McASP corresponding device level bidirectional data pad AXRn.

The serializer is clocked from the transmit section clock (ACLKX signal) if configured to transmit or clocked from the receive section clock (ACLKR signal) if configured to receive. A serializer configured to transmit and receive operates in lockstep, which means that for McASP there are at most a couple of zones, one for transmit and one for receive.

Figure 11-340 is the serializer block diagram.

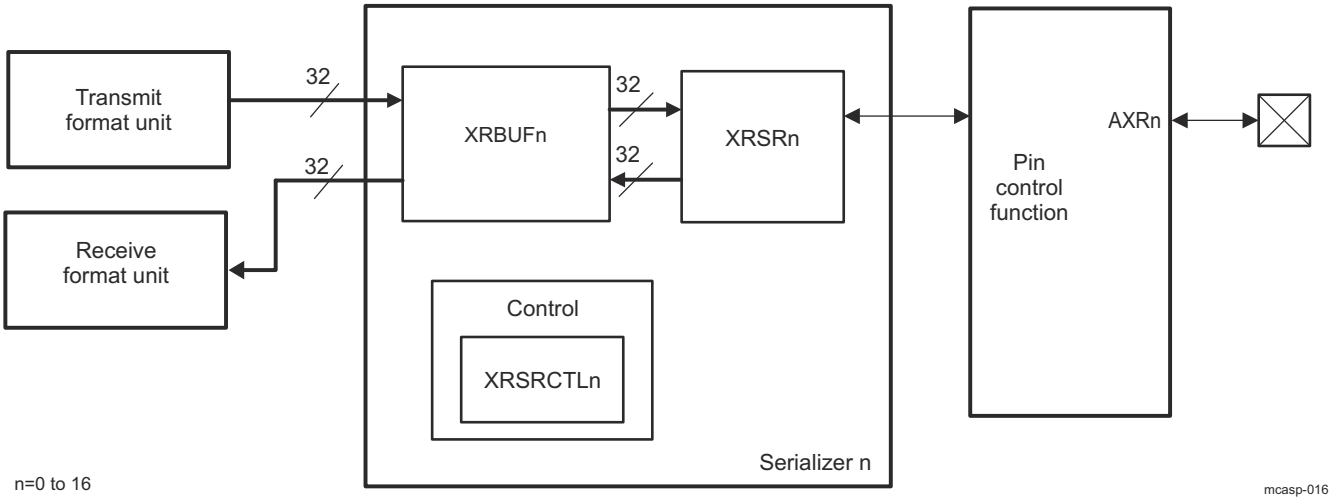

Figure 11-340. Individual Serializer and Connections Within McASP

Transmission on the n-th serializer is performed as follows:

The McASP is serviced by writing data into the register MCASP_TXBUFn, which is an alias of the serializer data buffer - XRBUFn for transmit function. The data automatically passes through the transmit format unit before reaching the XRBUFn register in the serializer. The data is then copied from the XRBUFn to XRSRn and shifted out from AXRn synchronously to the serial clock.

Reception from the n-th serializer is performed as follows:

The data is shifted into the McASP XRSRn serializer register through the AXRn pin, bit by bit. Once the entire slot becomes available within the XRSRn shift register, the data is copied into the serializer data buffer - XRBUFn,and can be accessed in the MCASP_RXBUFn register, which is an alias of the serializer data buffer - XRBUFn for receive function. When software reads the data from this register, the McASP passes the data through the receive format unit, hence it returns the formatted data.

Serializer controls:

A serializer n is configured as inactive via setting bitfield MCASP_XRSRCTLn[1:0] SRMOD to 0x0.

For a transmitting serializer, the MCASP_XRSRCTLn[3:2] DISMOD bitfield, defines the AXRn pin output state, during inactive slots (HIGH, LOW or Hi-Z).

Transmit function for the n-th serializer is selected via setting bitfield MCASP_XRSRCTLn[1:0] SRMOD to 0x1.

Receive function for the n-th serializer is selected via setting bitfield MCASP_XRSRCTLn[1:0] SRMOD to 0x2.

Copyright © 2025 Texas Instruments Incorporated

In the DIT-transmission mode (that is S/PDIF format data transmission): in addition to the data, the serializer shifts out other DIT-specific information accordingly (preamble, user data, etc.). For more information, see Section 11.5.1.2.2.5

11.5.1.4.4 Format Units

The McASP has one transmit data formatting unit and one receive data formatting unit, shared between the device McASP serializers. These units automatically remap the data bits within the transmitted or received words between a natural format for the device processors (for example, a Q31 representation) and the required format for the external serial device (for example I2S format). During the remapping process, the format unit can also mask off certain bits.

Since all transmitters share the same data formatting unit, the McASP only supports one transmit format at a time. For example, the McASP does NOT transmit in "I2S format" on serializer 0, while transmitting "Left Justified" on serializer 1. Likewise, the receiver section of the McASP only supports one data format at a time, and this format applies to all receiving serializers.

Note

The McASP can transmit in one format while receiving in a completely different format.

The bit mask and pad stage of each of Tx and Rx format units includes a full 32-bit mask register, allowing selected individual bits to either pass through the stage unchanged, or be masked off. The bit mask and pad then pad the value of the masked off bits by inserting either a 0, a 1, or one of the original 32 bits as the pad value. The last option allows for sign-extension when the sign bit is selected to pad the remaining bits. The rotate right stage performs bitwise rotation by a multiple of 4 bits (between 0 and 28 bits), programmable by the MCASP_RXFMT/MCASP_TXFMT register. Note that this is a rotation process, not a shifting process, so bit 0 gets shifted back into bit 31 during the rotation. The bit order - reversal stage either passes all 32 bits directly through, or swaps them. This allows for either MSB or LSB first data formats. If bit order reversal is not enabled, then the McASP will naturally transmit and receive in an LSB first order. Finally, note that the RDATDLY/XDATDLY bits in the MCASP_RXFMT/MCASP_TXFMT also determine the data format. For example, the difference between I2S format and left-justified is determined by the delay between the frame sync edge and the first data bit of a given time slot. For I2S format, RDATDLY/XDATDLY should be set to a 1-bit delay, whereas for left-justified format, it should be set to a 0-bit delay. The combination of all the options in MCASP_RXFMT/MCASP_TXFMT means that the McASP supports a wide variety of data formats, both on the serial data lines, and in the device CPU data representation.

11.5.1.4.4.1 Transmit Format Unit

The McASP transmit formatting unit consists of three stages :

- Bit mask (masks off bits)
- Rotate right (aligns data within word)
- Bit reversal (selects between MSB-first or LSB-first)

Figure 11-341 shows the transmit formatting unit.

The McASP transmitter supports serial formats of:

- Slot (or Time slot) size = 8, 12, 16, 20, 24, 28, 32 bits
- Word size ≤ Slot size
- Alignment: when more bits/slot than bits/words, then:
  - Left aligned = word shifted first, remaining bits are pad
  - Right aligned = pad bits are shifted first, word occupies the last bits in slot
- Order of bits shifted out:
  - MSB: most-significant bit of word is shifted out first, last bit is LSB
  - LSB: least-significant bit of word is shifted out last, last bit is MSB

Copyright © 2025 Texas Instruments Incorporated

Hardware support for these serial formats comes from the programmable options in the bitstream format register - MCASP_TXFMT:

- XRVRS: bit reverse (1) or no bit reverse (0)
- XROT: rotate right by 0, 4, 8, 12, 16, 20, 24, or 28 bits
- XSSZ: transmit slot size of 8, 12, 16, 20, 24, 28, or 32 bits

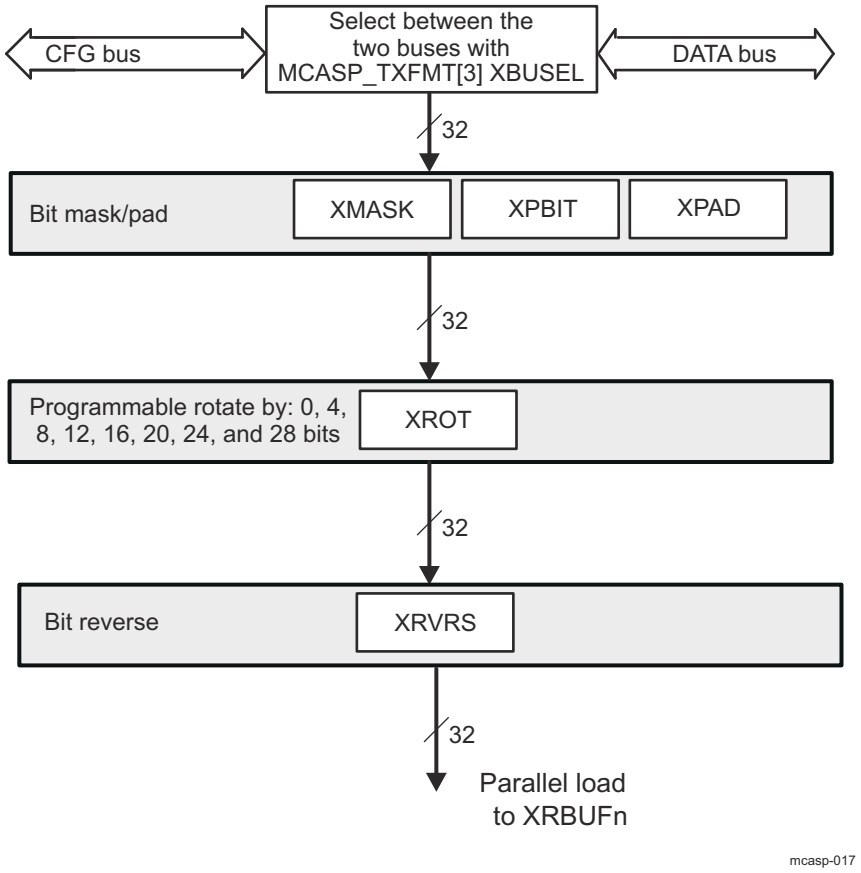

Figure 11-341. Transmit Format Unit

As shown in Figure 11-341, the data to the transmit format unit can come from the configuration port (CFG) or the data port (DATA). The selection is made through the MCASP_TXFMT[3] XBUSEL bit. According to port type selected, data transfer has different behaviour. For more details, refer to the Section 11.5.1.4.10.1.3, *Transfers Through the DATA Port*, and Section 11.5.1.4.10.1.4, *Transfers Through the Configuration (CFG) Bus*.

In the transmit format unit (TFU), the input data bits are first masked-off with the MCASP_TXMASK[31:0] XMASK contents. The masked data is then right-rotated to MCASP_TXFMT[2:0] XROT positions, to produce the output word for a TDM- or DIT- transmission.

The bit mask stage includes a full 32-bit mask register, allowing selected individual bits to pass through the stage unchanged or be masked off.

11.5.1.4.4.1.1 TDM Mode Transmission Data Alignment Settings

The TDM-mode transmission settings are relevant for I2S-protocol and protocols using more than 2 TDM-slots.

XSSZ should always be programmed to match the slot size of the serial stream.

Copyright © 2025 Texas Instruments Incorporated

Note

Note that, TDM word size is not directly programmed into the McASP, but rather is used to determine the rotation needed in the XROT field.

The Table 11-1339 show the XRVRS and XROT fields for each serial format and for both integer and Q31 fractional internal representations.

The Table 11-1339 assumes that all slot size (SLOT in Table 11-1339) and word size (WORD in Table 11-1339) options are multiples of 4, since the transmit rotate right unit only supports rotation by multiples of 4. However, the bit mask/pad unit does allow for any number of significant digits. For example, a Q31 number may have 19 significant digits (word) and be transmitted in a 24-bit slot; this would be formatted as a word size of 20 bits and a slot size of 24 bits. However, it is possible to set the bit mask unit to only pass the 19 most-significant digits (program the mask value to FFFF E000h). The digits that are not significant can be set to a selected pad value, which can be any one of the significant digits, a fixed value of 0, or a fixed value of 1.

The transmit bit mask/pad unit operates on data as an initial step of the transmit format unit, and the data is aligned in the same representation as it is written to the transmitter by the MPU or DSP (typically Q31 or integer).

Table 11-1339. McASP TFU TDM Mode Settings

Bit Stream Order	Bit Stream Alignment	Internal Numeric Representation	MCASP_TXFMT bits	
			XROT(1)	XRVRS
MSB first(2)	Left aligned	Q31 fraction	0	1
MSB first	Right aligned	Q31 fraction	SLOT - WORD	1
LSB first	Left aligned	Q31 fraction	32 - WORD	0
LSB first	Right aligned	Q31 fraction	32 - SLOT	0
MSB first(2)	Left aligned	Integer	WORD	1
MSB first	Right aligned	Integer	SLOT	1
LSB first	Left aligned	Integer	0	0
LSB first	Right aligned	Integer	(32 - (SLOT - WORD)) % 32	0

(1) WORD = Word size rounded up to the nearest multiple of 4; SLOT = slot size; % = modulo operator
(2) To transmit in I2S format, select MSB first, left aligned, and also select XDATDLY = 01 (1 bit delay)

11.5.1.4.4.1.2 DIT Mode Transmission Data Alignment Settings

In case of a DIT-mode (S/PDIF protocol) transmission, while left-aligned Q31 data should be right-rotated to a multiple by 4 positions, no right-rotation is required for a right-aligned Q31 data. Because this is a rotation process, not a shifting process, bit 0 gets shifted back into bit 31 during the process.

The MCASP_TXFMT[17:16] XDATDLY bit field must be set to a 0-bit delay (0x0 value).

For left-aligned Q31 data, the following transmit format unit settings process the data into right-aligned data, ready for transmission:

- MCASP_TXFMT[2:0] XROT =
  - 0x2 (rotate right by 8 bits) - for a 24-bit output audio data
  - 0x3 (rotate right by 12 bits) - for a 20-bit output audio data
  - 0x4 (rotate right by 16 bits) - for a 16-bit output audio data
- MCASP_TXFMT[15] XRVRS = 0x0 – Bit reversal is not enabled; the McASP naturally transmits and receives in a LSB-first order.
- MCASP_TXMASK[32] XMASK = 0xFFFFFF00 – 0xFFFF0000
- MCASP_TXFMT[14:13] XPAD = 0x0 (Pad extra bits with 0s.)

For right-aligned data, the following transmit format unit settings process the data into right-aligned audio data ready for transmission:

Copyright © 2025 Texas Instruments Incorporated

- MCASP_TXFMT[2:0] XROT = 0x0 (rotate right by 0 bits regardless of the audio word length)
- MCASP_TXFMT[15] XRVRS = 0x0 – Bit reversal is not enabled; the McASP naturally transmits and receives in a LSB-first order.
- MCASP_TXMASK[32] XMASK = 0x00FFFFFF – 0x0000FFFF
- MCASP_TXFMT[14:13] XPAD = 0x0 (Pad extra bits with 0s.)

The example settings provided in Table 11-1340 should be applied to McASP in cases of DIT-transmitting a Q31 data as a 24-bit, 20-bit and 16-bit left- or right- aligned audio word, respectively. Note that the listed settings let the McASP TFU preserve the most significant bits and cut only the LSBs of the original Q31 CPU data:

Table 11-1340. McASP TFU DIT-Mode Example Settings

Output Audio Word Alignment	Audio Word Length	Right-rotation (multiple of 4-bit positions)	XMASK	XROT
LEFT	16	16	0xFFFF0000	0x4
LEFT	20	12	0xFFFFF000	0x3
LEFT	24	8	0xFFFFFF00	0x2
RIGHT	16	0	0x0000FFFF	0x0
RIGHT	20	0	0x000FFFFF	0x0
RIGHT	24	0	0x00FFFFFF	0x0

Assuming that a Q31 data word 0xFA5AFxxx (where x-marked nibbles of the data are applied as padding bits of the word) is generated on the McASP CFG (peripheral) port. To transmit a left-aligned 20-bit version of same word, preserving the MSBs, according to the Table 11-1340, the user must set XMASK=0xFFFFF000, and to select a right-rotation to 12 positions (XROT=0x3).

- After applying 0-s (XPAD=0) as masking-off bits at the first TFU stage, word is transformed to the word 0xFA5AF000.
- After a rotation by 12 positions to the right is performed in TFU, the 20-bit output word obtained is: 0x000FA5AF.Thus the word gets ready for transmission being mapped with its LS-bit as bit 8 and its MS-bit as bit 27 within a S/PDIF bitstream. This word is shifted in a LSB-to-MSB order (XRVRS = 0x0) out of the XRSR register during a DIT-transmission.

Assuming that a right-aligned Q31 data word - 0x yyyyE4B4 is generated by software on the McASP CFG (peripheral) port (with the presumption that y-marked nibbles of the input data are applied as padding bits). To transmit a right-aligned 16-bit version of same word, preserving the MSBs, according to the table McASP TFU Example Settings, user is supposed to set XMASK=0x0000FFFF, and to select right-rotation to 0 positions (XROT=0x0).

- After masking-off with 0s at first TFU stage, word is transformed to 0x0000E4B4.
- Since no rotation is applied, the 16-bit output word obtained is actually the one obtained in the masking stage – 0x0000E4B4.

The above examples use internal representation in integer and Q31 notation, but other fractional notations are also possible.

11.5.1.4.4.2 Receive Format Unit

The McASP receive formatting unit consists of three stages:

- Bit mask (masks off bits)
- Rotate right (aligns data within word)
- Bit reversal (selects between MSB first or LSB first)

Figure 11-342 shows the receive format unit (RFU).

Copyright © 2025 Texas Instruments Incorporated

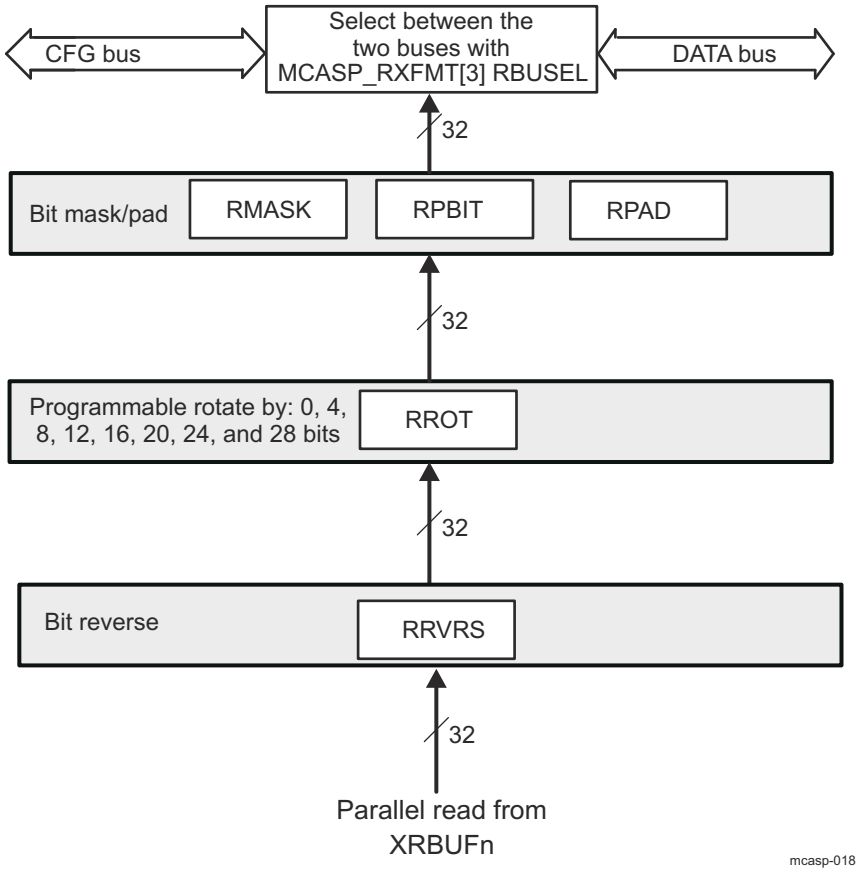

Figure 11-342. Receive Format Unit

The McASP receiver supports serial formats of:

- Slot or time slot size = 8, 12, 16, 20, 24, 28, 32 bits
- Word size ≤ Slot size
- Alignment when more bits are available per slot than bits per word within the slot, then:
  - Left aligned = word shifted first, remaining bits are pad
  - Right aligned = pad bits are shifted first, word occupies the last bits in slot
- Order of bits shifted out:
  - MSB: most-significant bit of word is shifted out first, last bit is LSB
  - LSB: least-significant bit of word is shifted out last, last bit is MSB

Hardware support for these serial formats comes from the programmable options in the receive bitstream format register - MCASP_RXFMT:

- RRVRS: bit reverse (1) or no bit reverse (0)
- RROT: rotate right by 0, 4, 8, 12, 16, 20, 24, or 28 bits
- RSSZ: receive slot size of 8, 12, 16, 20, 24, 28, or 32 bits

As shown on Figure 11-342, the data processed in the RFU can be output to host CPU through the configuration port (CFG) or the data port (DATA). The selection is made through the MCASP_RXFMT[3] RBUSEL bit. According to port type selected, data transfer has different behaviour. For more details, refer to the Section 11.5.1.4.10.1.3, *Transfers Through the DATA Port*, and Section 11.5.1.4.10.1.4, *Transfers Through the Configuration (CFG) Bus*.

11.5.1.4.4.2.1 TDM Mode Reception Data Alignment Settings

RSSZ should always be programmed to match the slot size of the serial stream.

Copyright © 2025 Texas Instruments Incorporated

Note

Note that the word size is not directly programmed into the McASP, but rather is used to determine the rotation needed in the RROT field.

Table 11-1341 shows the RRVRS and RROT fields for each serial format and for both integer and Q31 fractional internal representations.

Table 11-1341. McASP RFU Settings

Bit Stream Order	Bit Stream Alignment	Internal Numeric Representation	MCASP_RXFMT bits	
			RROT(1)	RRVRS
MSB first(2)	Left aligned	Q31 fraction	SLOT	1
MSB first	Right aligned	Q31 fraction	WORD	1
LSB first	Left aligned	Q31 fraction	(32 - (SLOT - WORD)) % 32	0
LSB first	Right aligned	Q31 fraction	0	0
MSB first(2)	Left aligned	Integer	SLOT - WORD	1
MSB first	Right aligned	Integer	0	1
LSB first	Left aligned	Integer	32 - SLOT	0
LSB first	Right aligned	Integer	32 - WORD	0

(1) WORD = Word size rounded up to the nearest multiple of 4; SLOT = slot size; % = modulo operator
(2) To receive in I2S format, select MSB first, left aligned, and also select RDATDLY = 01 (1 bit delay)

The Table 11-1341 assumes that all slot size and word size options are multiples of 4; since the receive rotate right unit only supports rotation by multiples of 4. However, the bit mask/pad unit does allow for any number of significant digits. For example, a Q31 number may have 19 significant digits (word) and be received in a 24-bit slot; this would be formatted as a word size of 20 bits and a slot size of 24 bits. However, it is possible to set the bit mask unit to only pass the 19 most-significant digits (program the mask value to FFFF E000h). The digits that are not significant can be set to a selected pad value, which can be any one of the significant digits, a fixed value of 0, or a fixed value of 1. The receive bit mask/pad unit operates on data as the final step of the receive format unit (see Figure 11-342), and the data is aligned in the same representation as it is read from the receiver (typically Q31 or integer, for example).

11.5.1.4.5 State-Machines

The receive and transmit sections have independent state machines.

Each state-machine controls the interactions between the various units in the McASP Rx and Tx sections, respectively. In addition, each state-machine keeps track of error conditions and serial port status. No serial transfers can occur until the RX/TX state-machine is released from reset.

The transmit state-machine is controlled by the transmit bitstream format register (MCASP_TXFMT) and it reports the McASP status and error conditions in the transmitter status register (MCASP_TXSTAT).

Similarly, the receive state-machine is controlled by the receive bitstream format register (MCASP_RXFMT) and it reports the McASP status and error conditions in the receiver status register (MCASP_RXSTAT).

11.5.1.4.6 TDM Sequencers

There are separate TDM sequencers for the transmit section and the receive section. Each TDM sequencer keeps track of the slot count. In addition, the TDM sequencer checks the bits of MCASP_RXTDM/ MCASP_TXTDM and determines if the McASP should receive/transmit in that time slot.

There are two possibilities for a slot: The McASP either performs Rx/Tx operations during the time slot (transmit/ receive bit is active), or the McASP skips Rx/Tx operations during the time slot (transmit/receive bit is inactive). In the latter case, no transfers between the XRBUF and XRSR registers in the serializer would occur during that time slot.

Copyright © 2025 Texas Instruments Incorporated

In addition, during time of inactive slots, the serializers programmed as transmitters place their data output pins - AXRn in a predetermined state - logic low, high, or high impedance (tri-stated) as programmed in each serializer control register MCASP_XRSRCTLn[3:2] DISMOD. Refer also to Section 11.5.1.4.9.2.1, *TDM Time Slots Generation and Processing*, for details on how DMA event or interrupt generations are handled during inactive time slots in TDM mode.

In case of a DIT-transmission (S/PDIF transfers): the time division multiplexing (TDM) sequencer is used to count the 384 subframes (slots) in the DIT block. If currently transmitting slot 1, slot 2 (next value of the TDM slot counter) should be used during the encode phase to select the appropriate C, V, and U bit, because the data encoded and written to a MCASP_TXBUFn register during the current time slot (slot 1) is actually shifted out on the next time slot.

The transmit TDM sequencer is controlled by the MCASP_TXTDM register and reports the current transmit slot to the MCASP_TXTDMSLOT[9:0] XSLOTCNT bit field.

11.5.1.4.7 McASP Software Reset

The McASP can be put into reset through the global transmit and receive control register (MCASP_GBLCTL). A valid serial clock must be supplied to the McASP to assert the software reset bits in the MCASP_GBLCTL register.

11.5.1.4.8 McASP Power Management

Table 11-1342 describes power-management features available to the McASP.

Table 11-1342. Local Power-Management Features

Feature	Registers	Description
Slave idle modes	PWRIDLESYSCONFIG[1:0] IDLE_MODE	Force-idle, no-idle, and smart-idle modes are available.

CAUTION

No wakeup schema is supported for the McASP. To ensure a correct behavior after enabling McASP at device PRCM level, the user software is strongly recommended to choose *No Idle* mode, setting PWRIDLESYSCONFIG[1:0] IDLE_MODE to 0x1. Before disabling McASP at device PRCM level, user software is strongly recommended to choose a *Smart-Idle* mode, setting PWRIDLESYSCONFIG[1:0] IDLE_MODE to 0x2.

11.5.1.4.9 Transfer Modes

11.5.1.4.9.1 Burst Transfer Mode

The McASP supports a burst transfer mode, which is useful for nonaudio data such as passing control information between two processors. Burst transfer mode uses a synchronous serial format similar to the TDM mode. The frame sync generation is not periodic or time-driven as in TDM mode, but data driven, and the frame sync is generated for each data word transferred.

When operating in burst frame sync mode (see Figure 11-343), as specified for transmit (MCASP_TXFMCTL[15:7] = 0) and receive (MCASP_RXFMCTL[15:7] RMOD = 0), one slot is shifted for each active edge of the frame sync signal that is recognized. Additional clocks after the slot and before the next frame sync edge are ignored.

In burst frame sync mode, the frame sync delay may be specified as 0, 1, or 2 serial clock cycles. This is the delay between the frame sync active edge and the start of the slot. The frame sync signal lasts for a single bit clock duration (MCASP_RXFMCTL[4] FRWID = 0, MCASP_TXFMCTL[4] FXWID = 0).

For transmit, when generating the transmit frame sync internally, the frame sync begins when the previous transmission has completed and when all the XBUFn (for every serializer set to operate as a transmitter) has been updated with new data.

Copyright © 2025 Texas Instruments Incorporated

For receive, when generating the receive frame sync internally, frame sync begins when the previous transmission has completed and when all the RBUFn (for every serializer set to operate as a receiver) has been read.

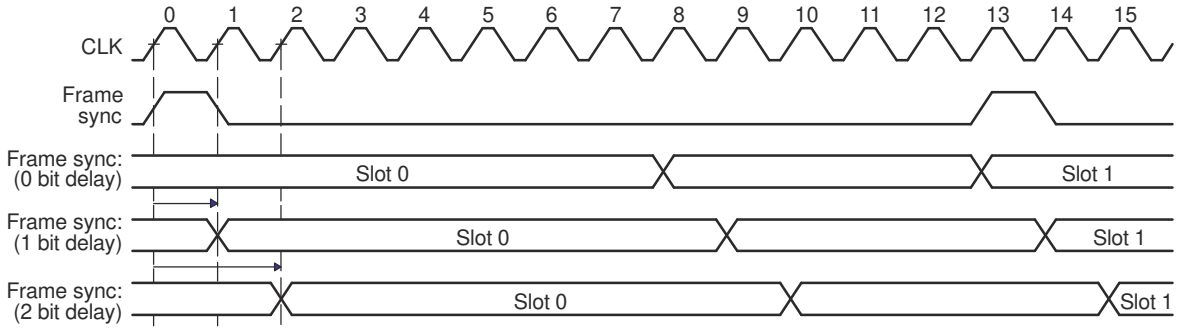

Figure 11-343. Burst Frame Sync Mode

The control registers must be configured as follows for the burst transfer mode. The burst mode specific bit fields are in bold face:

- MCASP_PFUNC: The clock, frame, data pins must be configured for McASP function.
- MCASP_PDIR: The clock, frame, data pins must be configured to the direction desired.
- MCASP_PDOUT, MCASP_PDIN, MCASP_PDSET, MCASP_PDCLR: Not applicable. Leave at default.
- MCASP_GBLCTL: Follow the initialization sequence in Section 11.5.1.5.1.2, *McASP Global Initialization*, to configure this register.
- MCASP_AMUTE: Not applicable. Leave at default.
- MCASP_LBCTL: If loopback mode is desired, configure this register according to Section 24.6.4.14 Loopback Modes, otherwise leave this register at default.
- MCASP_TXDITCTL: DITEN must be left at default 0 to select non-DIT mode. Leave the register at default.
- MCASP_RXMASK/MCASP_TXMASK: Mask desired bits according to Section 11.5.1.4.4, *Format Units*.
- MCASP_RXFMT/MCASP_TXFMT: Program all fields according to data format desired. See Section 11.5.1.4.4, *Format Units*.
- MCASP_RXFMT/MCASP_TXFMT: Clear RMOD/XMOD bits to 0 to indicate burst mode. Clear FRWID/FXWID bits to 0 for single bit frame sync duration. Configure other fields as desired.
- MCASP_ACLKRCTL/MCASP_ACLKRCTL: Program all fields according to bit clock desired. See Section 11.5.1.4.2, *McASP Clock and Frame-Sync Configurations*.
- MCASP_AHCLKRCTL/MCASP_AHCLKRCTL: Program all fields according to high-frequency clock desired. See Section 11.5.1.4.2, *McASP Clock and Frame-Sync Configurations*.
- MCASP_RXTDM/MCASP_TXTDM: Program RTDMS0/XTDMS0 to 1 to indicate one active slot only. Leave other fields at default.
- MCASP_EVTCTLR/MCASP_EVTCTLX: Program all fields according to interrupts desired.
- MCASP_RXCLKCHK/MCASP_TXCLKCHK: Not applicable. Leave at default.
- MCASP_XRSRCTLn: Program SRMOD to inactive/transmitter/receiver as desired. DISMOD is not applicable and should be left at default.
- MCASP_DITCSRAi, MCASP_DITCSRBi, MCASP_DITUDRAi, MCASP_DITUDRBi: Not applicable. Leave at default.

11.5.1.4.9.2 Time-Division Multiplexed (TDM) Transfer Mode

The McASP time-division multiplexed (TDM) transfer mode supports the TDM format discussed in Section 11.5.1.2.2.3.

Transmitting data in the TDM transfer mode requires a minimum set of pins:

- ACLKX - transmit bit clock
- AFSX - transmit frame sync (or commonly called left/right clock)
- One or more serial data pins, AXRn, whose serializers are configured to transmit

Copyright © 2025 Texas Instruments Incorporated

For more details on McASP transmitting serializers clock and frame sync options, refer to the Section 11.5.1.4.2.1, *Transmit Clock*, and Section 11.5.1.4.2.3, *Frame-Sync Generator* .

Similarly, to receive data in the TDM transfer mode requires a minimum set of pins:

- ACLKR - receive bit clock
- AFSR - receive frame sync (or commonly called left/right clock)
- One or more serial data pins, AXRn, whose serializers are configured to receive

For more details on McASP receiving serializers clock and frame sync options, refer to Section 11.5.1.4.2.2, *Receive Clock*, and Section 11.5.1.4.2.3, *Frame-Sync Generator* .

The control registers must be configured as follows for the TDM mode. The TDM mode specific bit fields are highlighted in bold:

- MCASP_PFUNC: The clock, frame, data pins must be configured for McASP function.
- MCASP_PDIR: The clock, frame, data pins must be configured to the direction desired.
- MCASP_PDOUT, MCASP_PDIN, MCASP_PDSET, MCASP_PDCLR: Not applicable. Leave at default.
- MCASP_GBLCTL: Follow the initialization sequence is described in the Section 11.5.1.5.2, *Operational Modes Configuration*.
- MCASP_AMUTE: Leave this register at default state.
- MCASP_LBCTL: If loopback mode is desired, configure this register according to Section 11.5.1.4.14, otherwise leave this register at default.
- MCASP_TXDITCTL: DITEN must be left at default 0 to select TDM mode (transmitters only).
- MCASP_RXMASK/MCASP_TXMASK: Mask desired bits according to Section 11.5.1.4.4, *Format Units*.
- MCASP_RXFMT/MCASP_TXFMT: Program all fields according to data format desired. See the Section 11.5.1.4.4, *Format Units*.
- MCASP_RXFMCTL/MCASP_TXFMCTL: Set RMOD/XMOD bits to (0x2 - 0x20) for Rx/Tx (2- 32 slots) TDM mode. In addition, set RMOD to 0x180 if 384-slot TDM stream has to be received by McASP. Configure other fields as desired.
- MCASP_ACLKRCTL/MCASP_ACLKXCTL: Program all fields according to bit clock desired. For more inforamtion, refer to Section 11.5.1.4.2.
- MCASP_AHCLKRCTL/MCASP_AHCLKXCTL: Program all fields according to high-frequency clock desired. For more details, refer to Section 11.5.1.4.2.
- MCASP_RXTDM/MCASP_TXTDM: Program all fields according to the time slot characteristics desired.
- MCASP_EVTCTLX: Program all fields according to transmit interrupts desired.
- MCASP_RXCLKCHK/MCASP_TXCLKCHK: Program all fields according to clock checking desired.
- MCASP_XRSRCTLn: Program all fields according to serializer operation desired.

Note

The MCASP_DITCSRAi, MCASP_DITCSRBi, MCASP_DITUDRAi, MCASP_DITUDRBi (i=0 to 5) settings are NOT applicable in TDM transfer modes. They have to be kept at their default values.

11.5.1.4.9.2.1 TDM Time Slots Generation and Processing

TDM mode on the McASP can extend to support multiprocessor applications, with up to 32 time slots per frame. For each of the time slots, the McASP may be configured to participate or to be inactive by configuring MCASP_TXTDM and/or MCASP_RXTDM registers.

The TDM sequencer (separate ones for transmit and receive) functions in this mode. The TDM sequencer counts the slots beginning with the frame sync. For each slot, the TDM sequencer checks the respective bit in either MCASP_TXTDM or MCASP_RXTDM to determine if the McASP transmits/receives in that time slot.

Copyright © 2025 Texas Instruments Incorporated

Note

If a MCASP_TXTDM/MCASP_RXTDM bit defines an active slot (number of slot matches the bit position), the McASP functions normally during that time slot; otherwise, the McASP is inactive during that time slot; no update to the buffer occurs, and no event is generated. McASP (transmit only) data pins are automatically set to a high-impedance state, 0, or 1 during that slot, as determined by bitfield MCASP_XRSRCTLn[3:2] DISMOD.

Figure 11-344 shows when the transmit DMA event - AXEVT is generated. See Section 11.5.1.4.10.1, *Data Ready Status and Event/Interrupt Generation* for details on data ready and the initialization period indication. The transmit DMA event for an active time slot (slot N) is generated during the previous time slot (slot N - 1), regardless of the previous time slot (slot N - 1) being active or inactive.

During an active transmit time slot (slot N), if the next time slot (slot N + 1) is configured to be active, the copy from XRBUFn to XRSRn generates the DMA event for time slot N + 1. If the next time slot (slot N + 1) is configured to be inactive, then the DMA event will be delayed to time slot M - 1. In this case, slot M is the next active time slot. The DMA event for time slot M is generated during the first bit time of slot M - 1.

The receive DMA event is generated after data is received in the buffer (looks back in time). If a time slot is disabled, then no data is copied to the buffer for that time slot and no DMA event is generated.

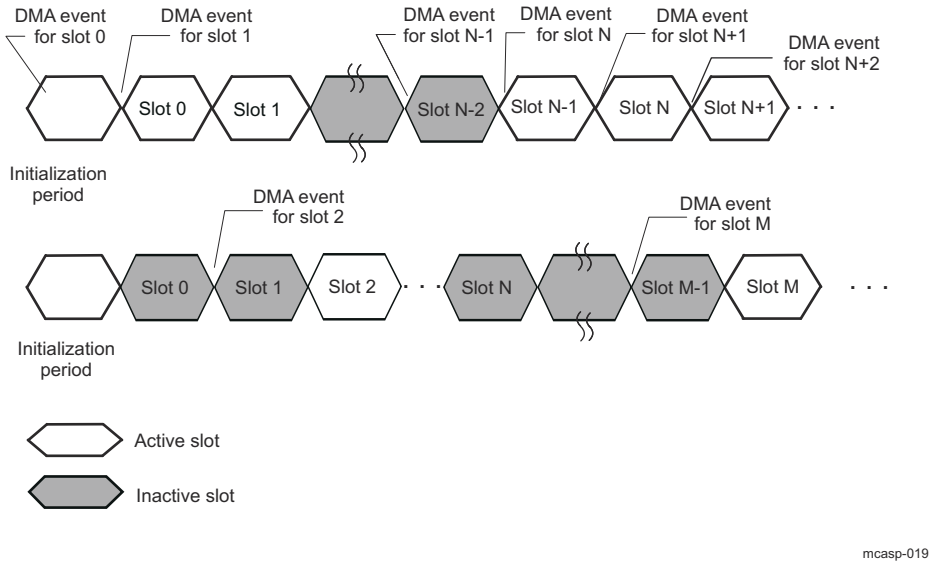

Figure 11-344. Transmit DMA Event (AXEVT) Generation in TDM Time Slots

11.5.1.4.9.2.2 Special 384-Slot TDM Mode for Connection to External DIR

The McASP receiver also supports a 384 time slot TDM mode (DIR mode), to support S/PDIF receiver ICs whose natural block (block corresponds to McASP frame) size is 384 samples. The receive TDM time slot register (MCASP_RXTDM) should be programmed to all 1s during reception of a DIR block. Other TDM functionalities (for example, inactive slots) are not supported (only the slot counter counts the 384 subframes in a block). To receive data in DIR mode, the following pins are typically needed:

- ACLKR - receive bit clock
- AFSR - receive frame sync (or commonly called left/right clock)
- In this mode, AFSR should be connected to a DIR which outputs a start of block signal, instead of LRCLK
- One or more serial data pins, AXRn, whose serializers have been configured to receive
- For this special DIR mode, the control registers can be configured just as for TDM mode, except set RMOD in MCASP_RXFMCTL to 384 (0x180) to receive 384 time slots

Copyright © 2025 Texas Instruments Incorporated

11.5.1.4.9.3 DIT Transfer Mode

The DIT transfer mode of the McASP also supports transmission of audio data in S/PDIF, AES-3, and IEC-60958 formats. These formats are designed to carry audio data between different systems through an optical or coaxial cable. The DIT mode applies only to a serializer configured as transmitter, not as receiver. For a description of the S/PDIF format, see Section 11.5.1.2.2.5, *S/PDIF Coding Format*.

11.5.1.4.9.3.1 Transmit DIT Encoding

When the McASP operates in DIT mode, the data transmitted is output as a biphase-mark encoded bitstream, with preamble, channel status, user data, validity, and parity automatically stuffed into the bitstream by the McASP. The McASP includes separate validity bits for even/odd subframes and two 384-bit RAM modules to hold channel status and user data bits.

Note

The transmit TDM time slot register (MCASP_TXTDM) should be programmed to all 1s during DIT mode. TDM functionality is not supported in DIT mode, except that the TDM slot counter counts the DIT subframes.

To transmit data in DIT mode, the following pins are typically required:

- AHCLKX – transmit high-frequency master clock (The internal clock source can be used instead.)
- One serial data pin (AXRn) of a serializer n configured to transmit.

For DIT Mode Transmission Data Alignment Settings see Section 11.5.1.4.4.1.2.

If the McASP is configured to transmit in the DIT mode on more than one serial data pin, the bit streams on all pins will be synchronized. In addition, although they will carry unique audio data, they will carry the same channel status, user data, and validity information.

The actual 24-bit audio data must always be in bit positions 23–0 after passing through the first three stages of the transmit format unit.

11.5.1.4.9.3.2 Transmit DIT Clock and Frame-Sync Generation

The DIT transmitter works only in the following configuration:

- In the transmit frame control register (MCASP_TXFMCTL):
  - Internally generated transmit frame sync, FSXM = 1
  - Rising-edge frame sync, FSXP = 0
  - Bit-width frame sync, FXWID = 0
  - 384-slot TDM, XMOD = 1 1000 0000b
- In the transmit clock control register (MCASP_ACLKXCTL), ASYNC = 1
- In the transmit bitstream format register (MCASP_TXFMT), XSSZ = 1111 (32-bit slot size)

All combinations of AHCLKX and ACLKX are supported.

The following summarizes the register configurations required for DIT mode. DIT mode-specific bit fields are in bold face:

- MCASP_PFUNC: The data pin - AXRn must be configured for McASP function. If AHCLKX is used, it must also be configured for McASP function. Other pins can be configured to function as GPIOs, if desired.
- MCASP_PDIR: The data pin must be configured as output. If internal clock source AUXCLK is used as the reference clock, it may be output as the AHCLKX device level signal by configuring AHCLKX pin as an output.
- MCASP_GBLCTL: Global initialization
- MCASP_AMUTE: Leave this register at default state.
- MCASP_TXDITCTL: The DITEN bit must be set to 0b1 to enable DIT mode. Configure other bits as desired.
- MCASP_TXMASK: Mask the desired bits, depending upon left-aligned or right-aligned internal data.

Copyright © 2025 Texas Instruments Incorporated

- MCASP_TXFMT: XDATDLY = 0. XRVRS = 0. XPAD = 0. XSSZ = Fh (32-bit slot). XBUSEL = configured as desired. The XROT bit is configured, as described in the Section 11.5.1.4.4.1.2 .
- MCASP_TXFMCTL: Configure the bits according to former discussions.
- MCASP_ACLKXCTL: ASYNC = 1. Program the CLKXDIV bits to obtain the bit clock rate desired. CLKXM = 1.
- MCASP_AHCLKXCTL: Program the HCLKXDIV bits to obtain the high-frequency bit clock rate desired.
- MCASP_TXTDM: Set to FFFF FFFFh for all active slots for DIT transfers.
- MCASP_EVTCTLX: Program all fields according to the interrupts desired.
- MCASP_TXCLKCHK: Program all fields according to the clock checking desired.
- MCASP_XRSRCTLn: Set SRMOD = 1 (transmitter) for the DIT pins.
- MCASP_DITCSRAi and MCASP_DITCSRBi: Program the channel status bits as desired.
- MCASP_DITUDRAi and MCASP_DITUDRBi: Program the user data bits as desired.

Note

In DIT mode, the transmitter can support a 192 kHz frame rate (stereo) on up to 2 serial data pins simultaneously (note that the internal bit clock for DIT runs two times faster than the equivalent bit clock for TDM (I2S) mode, due to the need to generate Biphase Mark Encoded Data - see Section 11.5.1.2.2.5.1).

11.5.1.4.9.3.3 DIT Channel Status and User Data Register Files

The channel status registers (MCASP_DITCSRAi and MCASP_DITCSRBi) and user data registers (MCASP_DITUDRAi and MCASP_DITUDRBi) are not double-buffered. Typically, programmers use one of the synchronizing interrupts, such as the last slot, to create an event at a safe time so the register may be updated. In addition, the software reads the transmit TDM slot counter to determine which word of the register is being used.

It is a software requirement to avoid writing to the word of user data and channel status that are being used to encode the current time slot; otherwise, it is undetermined whether old or new data is used to encode the bitstream.

The DIT subframe format is defined in Section 11.5.1.2.2.5.2, *S/PDIF Subframe Format*. The channel status information (C) and user data (U) are defined in the following DIT control registers:

- MCASP_DITCSRA0 to MCASP_DITCSRA5: The 192 bits in these six registers contain the channel status information for the left channel within each frame.
- MCASP_DITCSRB0 to MCASP_DITCSRB5: The 192 bits in these six registers contain the channel status information for the right channel within each frame.
- MCASP_DITUDRA0 to MCASP_DITUDRA5: The 192 bits in these six registers contain the user data information for the left channel within each frame.
- MCASP_DITUDRB0 to MCASP_DITUDRB5: The 192 bits in these six registers contain the user data information for the right channel within each frame.
- The S/PDIF block format is shown in Figure 11-334. There are 192 frames within a block (frame 0 to frame 191). There are two subframes within each frame (subframes 1 and 2 for the left and right channels, respectively).

The channel status and user data information sent on each subframe is summarized in Table 11-1343.

Table 11-1343. Channel Status and User Data for Each DIT Block

Frame	Subframe	Preamble	Channel Status Defined in:	User Data Defined in:
Defined by DITCSRA0, DITCSRB0, DITUDRA0, DITUDRB0				
0	1 (L)	B	DITCSRA0[0]	DITUDRA0[0]
0	2 (R)	W	DITCSRB0[0]	DITUDRB0[0]
1	1 (L)	M	DITCSRA0[1]	DITUDRA0[1]
1	2 (R)	W	DITCSRB0[1]	DITUDRB0[1]
2	1 (L)	M	DITCSRA0[2]	DITUDRA0[2]

Copyright © 2025 Texas Instruments Incorporated

Table 11-1343. Channel Status and User Data for Each DIT Block (continued)

Frame	Subframe	Preamble	Channel Status Defined in:	User Data Defined in:
2	2 (R)	W	DITCSRB0[2]	DITUDRB0[2]
…	…	…	…	…
31	1 (L)	M	DITCSRA0[31]	DITUDRA0[31]
31	2 (R)	W	DITCSRB0[31]	DITUDRB0[31]
Defined by DITCSRA1, DITCSRB1, DITUDRA1, DITUDRB1				
32	1 (L)	M	DITCSRA1[0]	DITUDRA1[0]
32	2 (R)	W	DITCSRB1[0]	DITUDRB1[0]
…	…	…	…	…
63	1 (L)	M	DITCSRA1[31]	DITUDRA1[31]
63	2 (R)	W	DITCSRB1[31]	DITUDRB1[31]
Defined by DITCSRA2, DITCSRB2, DITUDRA2, DITUDRB2				
64	1 (L)	M	DITCSRA2[0]	DITUDRA2[0]
64	2 (R)	W	DITCSRB2[0]	DITUDRB2[0]
…	…	…	…	…
95	1 (L)	M	DITCSRA2[31]	DITUDRA2[31]
95	2 (R)	W	DITCSRB2[31]	DITUDRB2[31]
Defined by DITCSRA3, DITCSRB3, DITUDRA3, DITUDRB3				
96	1 (L)	M	DITCSRA3[0]	DITUDRA3[0]
96	2 (R)	W	DITCSRB3[0]	DITUDRB3[0]
…	…	…	…	…
127	1 (L)	M	DITCSRA3[31]	DITUDRA3[31]
127	2 (R)	W	DITCSRB3[31]	DITUDRB3[31]
Defined by DITCSRA4, DITCSRB4, DITUDRA4, DITUDRB4				
128	1 (L)	M	DITCSRA4[0]	DITUDRA4[0]
128	2 (R)	W	DITCSRB4[0]	DITUDRB4[0]
…	…	…	…	…
159	1 (L)	M	DITCSRA4[31]	DITUDRA4[31]
159	2 (R)	W	DITCSRB4[31]	DITUDRB4[31]
Defined by DITCSRA5, DITCSRB5, DITUDRA5, DITUDRB5				
160	1 (L)	M	DITCSRA5[0]	DITUDRA5[0]
160	2 (R)	W	DITCSRB5[0]	DITUDRB5[0]
…	…	…	…	…
191	1 (L)	M	DITCSRA5[31]	DITUDRA5[31]
191	2 (R)	W	DITCSRB5[31]	DITUDRB5[31]

11.5.1.4.10 Data Transmission and Reception

The McASP is serviced by writing data to the MCASP_TXBUFn registers for transmit operations, and by reading data from the MCASP_RXBUFn registers for receive operations. The McASP sets status flags and notifies the software whenever data is ready to be serviced. The Section 11.5.1.4.10.1, *Data Ready Status and Event/ Interrupt Generation*, discusses data-ready status in details.

The McASP transmit/receive XRBUFn buffer can be accessed through one of the two peripheral ports of the device:

- DATA port: This port is dedicated to DMA initiated data transfers on the device for McASP transmit (Tx) purposes.
- Configuration bus (CFG): The configuration bus- CFG port is used for peripheral configuration control and receive/transmit data transfers initiated by the host CPU in the device.

Copyright © 2025 Texas Instruments Incorporated

Section 11.5.1.4.10.1.3, *Transfers Through the Data Port (DATA)*, and Section 11.5.1.4.10.1.4, *Transfers Through the Configuration Bus (CFG),* discuss how to perform transfers through the data port (DATA) and the configuration port (CFG), respectively.

A device CPU and DMA usages are discussed in Section 11.5.1.4.10.1.5, *Using the device CPUs for McASP Servicing*, and Section 11.5.1.4.10.1.6, *Using the DMA for McASP Servicing*, respectively.

McASP DATA port allows DMAs to access the McASP transmit buffer more efficiently on the L3_MAIN-interconnect or L4_PER2 interconect, using burst transfers. The physical addresses to access these registers are listed in .

11.5.1.4.10.1 Data Ready Status and Event/Interrupt Generation

11.5.1.4.10.1.1 Transmit Data Ready

The transmit data ready flag - XDATA in the MCASP_TXSTAT register reflects the data ready status of XRBUFn buffers for all of the active slot transmitting serializers. The XDATA flag is set whenever data is transferred from a transmitting serializer buffer - XRBUFn to its corresponding XRSRn shift register. Thus, the XDATA bit indicates the global event that some of the serializers data buffer - XRBUFn is emptied and ready to accept new data from the host (CPU or DMA). The transmit data ready event is individually indicated per serializer in its corresponding control register MCASP_XRSRCTLn[4] XRDY status bit. When this bit is set to 0b1, it notifies to host that this serializer Tx buffer must be serviced (written). When MCASP_TXBUFn is written to by the host, the MCASP_XRSRCTLn[4] XRDY is deasserted to 0b0. As XDATA global flag is an OR-event of all active serializers XRDY flags, it indicates to software the moment, when write service operation has to be initiated by the McASP host (XDATA=0b1). The XRDY flags have to be sequentially scanned by user software to determine which serializer MCASP_TXBUFn register has to be currently written. Once all requested MCASP_TXBUFn are written, the serializers control XRDY flags are cleared to 0b0. As a consequence, XDATA flag is deasserted to 0b0, to indicate to SW that write operation is completed for all serializers.

The global XDATA flag can be cleared when the MCASP_TXSTAT[5] XDATA bit is written to 0b1, or once MCASP_TXBUFn registers of all the serializers, that have previously raised their XRDY flags, are written with corresponding active slot data by the host.

Whenever XDATA is set, the AXEVT event is automatically generated on MCASPi_DREQ_TX line (if enabled in the MCASP_XEVTCTL register) to notify the DMA of the MCASP_TXBUFn empty status. An interrupt - MCASPi_IRQ_AXEVT can be also generated if the XDATA interrupt is enabled in the MCASP_EVTCTLX register (for details, see Section 11.5.1.4.12.1, *Transmit Data Ready Interrupt*).

For DMA requests, the McASP does not require that MCASP_TXSTAT be read between DMA events. This means that, even if MCASP_TXSTAT already has the XDATA flag set to 1 from a previous request, the next transfer triggers another DMA request.

Because the serializer acts in lockstep, only one DMA event is generated to indicate that the transmit serializer is ready to be written to with new data.

Figure 11-345 shows the timing details of when AXEVT is generated at the McASP boundary. In this example, as soon as the last bit (A0) of word A is transmitted, the McASP sets the XDATA flag and generates an AXEVT event. However, it takes up to five McASP interface clocks (AXEVT latency) before AXEVT is active at the McASP boundary. Upon AXEVT, the CPU can begin servicing the McASP by writing word C into the MCASP_TXBUFn (service time). The CPU must write word C into the MCASP_TXBUFn within the setup time required by the McASP (setup time).

The maximum service time (see Figure 11-345) can be calculated as:

Service Time = Time Slot – AXEVT Latency –Setup Time

Copyright © 2025 Texas Instruments Incorporated

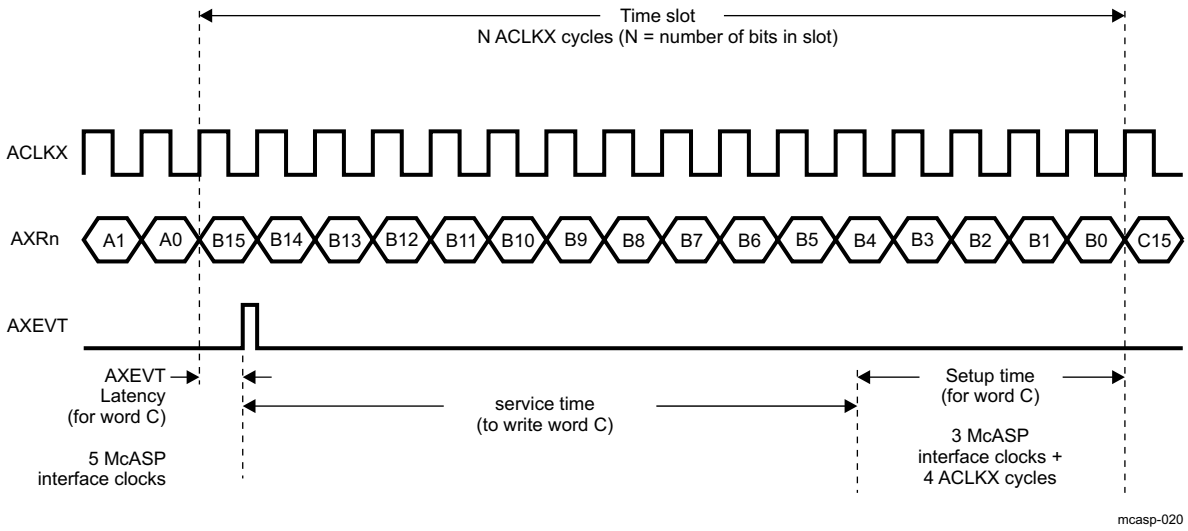

Figure 11-345. Service Time Upon Transmit DMA Event (AXEVT)

11.5.1.4.10.1.2 Receive Data Ready

Similarly, the receive data ready flag - RDATA in the MCASP_RXSTAT register reflects the data ready status of XRBUFn buffers for all of the active slot receiving serializers. The RDATA flag is set whenever data is transferred from a receiving serializer shift register XRSRn to its corresponding XRBUFn data buffer. Thus, the RDATA bit indicates the global event that some of the receivers data buffer - RXBUFn already contains received data (i.e. a buffer is full) and is ready to transfer it to the host (MPU/DSP). The receive data ready event is individually indicated per serializer in its corresponding control register MCASP_XRSRCTLn [5] RRDY status bit. When this bit is set to 0b1, it notifies to host that this serializer Rx buffer must be serviced (read). When MCASP_RXBUFn is read from the host, the MCASP_XRSRCTLn [5] RRDY is deasserted to 0b0. As RDATA global flag is an OR-event of all active serializers RRDY flags, it indicates to software the moment, when read service operation has to be initiated by the McASP host (RDATA=0b1). The RRDY flags have to be sequentially scanned by user software to determine which serializer MCASP_RXBUFn register has to be currently read. Once all requested MCASP_RXBUFn are read, the serializers control RRDY flags are cleared to 0b0. As a consequence, RDATA flag is deasserted to 0b0, to indicate to SW that read operation is completed for all serializers.

The global RDATA flag can be cleared when the MCASP_RXSTAT[5] RDATA bit is written to 0b1, or once MCASP_RXBUFn registers of all the serializers, that have previously raised their RRDY flags, are read by the host.

Whenever RDATA is set, the AREVT event is automatically generated on MCASPi_DREQ_RX line (if enabled in the MCASP_REVTCTL register) to notify the DMA of the MCASP_RXBUFn full status. An interrupt - MCASPi_IRQ_AREVT can be also generated if the RDATA interrupt is enabled in the MCASP_EVTCTLR register (for details, see Section 11.5.1.4.12.1, *Receive Data Ready Interrupt*).

Figure 11-346 shows the timing details of when AREVT event is generated at the McASP boundary. In this example, as soon as the last bit (bit A0) of Word A is received, the McASP sets the RDATA flag and generates an AREVT event. However, it takes up to five McASP interface clocks (AREVT Latency) before AREVT is active at the McASP boundary. Upon AREVT, the CPU can begin servicing the McASP by reading Word A from the MCASP_RXBUFn (service time). The CPU must read Word A from the MCASP_RXBUFn register no later than the setup time required by the McASP (Setup Time).

The maximum service time (see Figure 11-346) can be calculated as:
Service Time = Time Slot - AREVT Latency - Setup Time

Copyright © 2025 Texas Instruments Incorporated

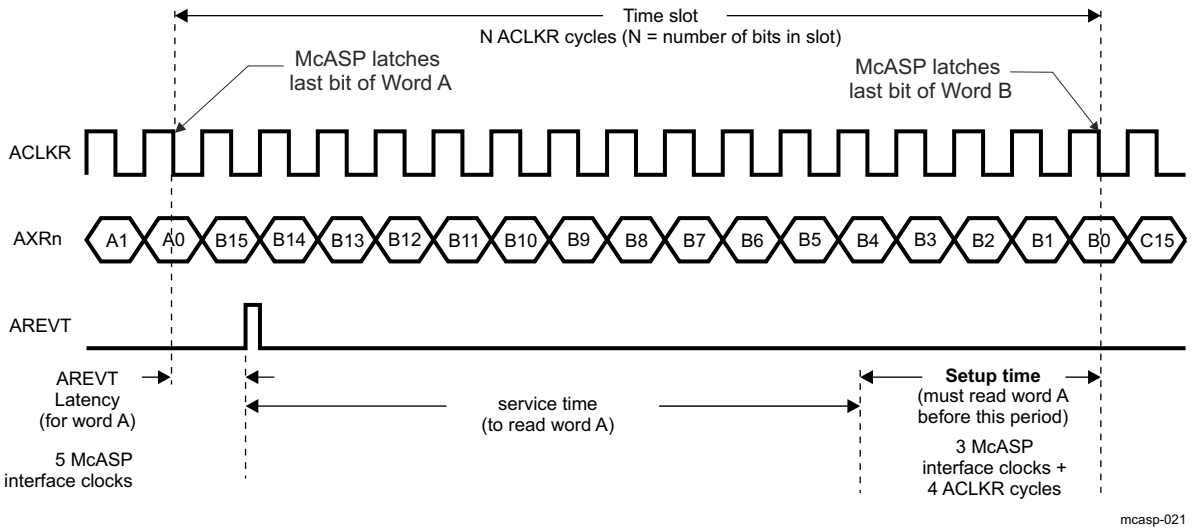

Figure 11-346. CPU Service Time Upon Receive Event (AREVT)

11.5.1.4.10.1.3 Transfers Through the Data Port (DATA)

CAUTION

To perform internal transfers through the DATA port, clear the XBUSEL/RBUSEL bit to 0b0 in the MCASP_TXFMT/MCASP_RXFMT register, respectively. Failure to do so may result in software malfunction.

Note

McASP1, whose data portis accessible directly via L3_MAIN, does not support FIFO/constant addressing modes. Incrementing transfers must be used instead.

In a typical McASP transfer scenario, the DMA Controller write accesses the XRBUFn transmit buffer through the McASP data port (DATA) on L3_MAIN Interconect for McASP1 and on L4_PER2 Interconect for McASP2/3 . CPU hosts can access both XRBUFn transmit and receive data buffers on their corresponding DATA port address via DATA port corresponding address. To perform transfers through the DATA port, simply have the DMA Controller write the McASP Tx buffer through Interconect DATA port location. Refer to . Although the transfer is passed through an integrated AFIFO transmit/receive buffer, the host (DMA or CPU) must follow the described below procedure to access the data buffers of each serializer, regardless the AFIFO is enabled or disabled. The AFIFO operation is described in Section 11.5.1.4.11.

For accesses through the DATA port, the DMA/CPU services all the serializers through accessing only a single address. In addition, as can be seen in , the same physical DATA port address is used regardless of a read or write access is performed. The McASP automatically cycles through the active slot transmitting/receiving serializers, internally generating the appropriate offsets.

Note

DATA port allows the DMA/CPU to automatically access only the data buffers. There is no way for DMA/CPU to access the McASP configuration registers addressing their corresponding McASP DATA port.

For transmit operations through the DATA port, the host must always write to the same transmit buffer DATA port address (which is same than the receive buffer DATA port adress) to service all of the active slot transmitting

Copyright © 2025 Texas Instruments Incorporated

serializers. Regardless of McASP serializer 0 being configured inactive or active, the user software must always configure the destination address to match the DATA port location of TXBUF buffer (See).

In addition, the DMA/CPU must write the buffers of all transmitting serializers in incremental (although not necessarily consecutive) order. For example, if only serializers 1 and 3 are set up as active transmitters, to the same transmit buffer DATA port address twice - first data for serializer 1 and second data for serializer 3 upon each transmit data ready event. This exact servicing order must be followed so that data appears in the appropriate serializers.

Note

For write transfers through McASP DATA port it is preferable to use DMA on corresponding Interconect. This is because DMAs initiated traffic gets better advantage of the burst transfers supported by DATA port.

For receive operations through the DATA port, the DMA/CPU must always read from the same receive buffer DATA port address (which is same than the transmit buffer DATA port adress) to service all of the active slot receiving serializers. Regardless of McASP serializer 0 being configured inactive or active, the user software must always configure the DMA/CPU source address to match the DATA port location of RXBUF buffer (See).

In addition, reads from the receive buffer for all active slot receiving serializers through the Rx DATA port return data in incremental (although not necessarily consecutive) order. For example, if serializers 0, 1 and 3 are set up as active receivers, the MPU should read from the same receive buffer DATA port address three times to obtain data for serializers 0,1 and 3 in this exact order, upon each receive data ready event.

Note

To service a serializer for a transmit or receive operation through the McASP DATA port, the initiator always writes (preferably DMA) and reads from the same address (refer to), respectively.

See , *McASP_DATA Register Summary*, for more details about XRBUFn buffer physical address corresponding to the McASP DATA port on:

- Main Interconect (L3_MAIN or L4_PER2)

Note

When transmitting through the DATA port, the DMA/CPU must write data (at the same address) to each serializer configured as *active* (active slot selected in MCASP_TXTDM) and *transmit* (Tx enabled in MCASP_XRSRCTLn) within each time slot. Failure to do so results in a buffer underrun condition (see Section 11.5.1.4.15.1, *Buffer Underrun Error - Transmitter*). Similarly, when DMA/CPU receives, data must be read from each serializer configured as *active* (active slot selected in MCASP_RXTDM) and *receive* (Rx enabled in MCASP_XRSRCTLn) within each time slot. Failure to do results in a buffer overrun condition (see Section 11.5.1.4.15.2, *Buffer Overrun Error - Receiver*).

11.5.1.4.10.1.4 Transfers Through the Configuration Bus (CFG)

CAUTION

To perform internal transfers through the configuration bus, set the XBUSEL/RBUSEL bit to 1 in the MCASP_TXFMT/MCASP_RXFMT registers, respectively. Failure to do so may result in software malfunction.

Copyright © 2025 Texas Instruments Incorporated

Note

McASP1, whose data port is accessible directly via L3_MAIN does not support FIFO/constant addressing modes. Incrementing transfers must be used instead.

In this method, the DMA/CPU accesses the XRBUFn transmit or receive buffer through corresponding configuration bus (CFG) address.

The exact XRBUFn transmit/receive buffer physical address for any particular serializer is determined by adding the transmit/receive buffer alias register offset for that particular serializer to the base address of McASP CFG port actual for L4_PER2 accesses. The XRBUFn buffer of the n-th serializer configured as a transmitter is aliased - MCASP_TXBUFn in the CFG port address space. For example, the XRBUF2 transmit buffer is mapped as the MCASP_TXBUF2 register. Similarly, the XRBUFn buffer of the n-th serializer configured as a receiver is aliased - MCASP_RXBUF in the CFG port address space. For example, the XRBUF3 receive buffer is mapped as the MCASP_RXBUF3 register.

Accessing the XRBUF through the DATA port (see Section 11.5.1.4.10.1.3) is different than CFG port accesses because the DATA port access demands the same physical address, regardless of transfer direction or current channel index , while accessing through the peripheral configuration port - CFG, the DMA/CPU must provide the exact MCASP_TXBUFn or MCASP_RXBUF address upon accessing n-th serializer TX or RX buffer, respectively. For more details about MCASP_TXBUFn and MCASP_RXBUF addresses corresponding to McASP CFG port, see , *MCASP_CFG Register Summary*.

11.5.1.4.10.1.5 Using a Device CPU for McASP Servicing

The device CPUs can be used to service the McASP transmit channels through interrupts (upon MCASPi_IRQ_AXEVT and MCASPi_IRQ_AREVT interrupts). Another way to service the transmit and receive channels, a polling of the XDATA bit in the MCASP_TXSTAT register and RDATA bit in the MCASP_RXSTAT register can be performed by device CPUs, respectively. As discussed in Section 11.5.1.4.10.1.3, *Transfers Through the Data Port (DATA)*, and Section 11.5.1.4.10.1.4, *Transfers Through the Configuration Bus (CFG)* , the device CPUs can access McASP XRBUF serializer buffer through their corresponding DATA and CFG port locations.

To use the device CPUs to service the McASP through interrupts, the XDATA/RDATA bit must be enabled in the respective MCASP_EVTCTLX/MCASP_EVTCTLR registers, to generate interrupts MCASPi_IRQ_AXEVT/ MCASPi_IRQ_AREVT to the device CPUs upon data ready

11.5.1.4.10.1.6 Using the DMA for McASP Servicing

The typical scenario is to use the DMA to service the McASP transmit and receive logic through the DATA port, although the DMA can also service the McASP through the configuration bus (CFG). The transfer passes through integrated AFIFO transmit/receive buffer. If AFIFO is enabled, DMA requests are collected and fed to a device DMA controller (see Figure 11-336). The data transfer is managed by the AFIFO according to generated transmit and receive events in the McASP and data is fed to transmit buffers and fetched from receive buffers as described in Section 11.5.1.4.11. The generation of transmit and receive request is described below. After generation of transmit/receive DMA events from McASP module, these events are collected in AFIFO and on specific AFIFO conditions described in Section 11.5.1.4.11 the requests (transmit or receive) are forwarded to a DMA controller via MCASPi_DREQ_TX and MCASPi_DREQ_RX outputs. If the AFIFO is disabled (default state) it is transperrant for the McASP module and all request are directly sent to the DMA controller.

Copyright © 2025 Texas Instruments Incorporated

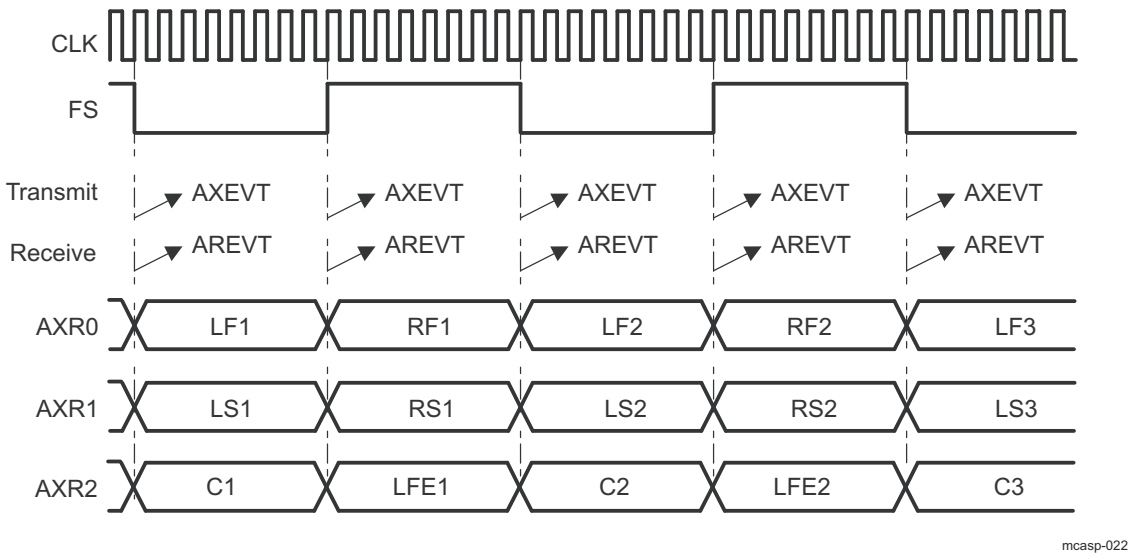

Figure 11-347. DMA Transmit and Receive Event in an Audio Example – One Event

In transmit mode, the DMA event - AXEVT (MCASPi_DREQ_TX output), which is triggered upon each XDATA transition from 0 to 1, is used to service the McASP TXBUFn transmit buffers. In receive mode, the DMA event AREVT (MCASPi_DREQ_RX output) which is triggered upon each RDATA transition from 0 to 1, is used to service the McASP RXBUFn receive buffers.

Figure 11-347 is an example of an audio system with six audio channels (LF, RF, LS, RS, C and LFE) transmitted or received through the McASP signals - AXR0, AXR1 and AXR2. It shows the points at which events AXEVT/AREVT are triggered.

In Figure 11-347, a Tx DMA event AXEVT is triggered on each time slot. In the example, AXEVT is triggered for each of the transmit audio channel time slot (time slot for channels LF, LS, and C; and time slot for channels RF, RS, LFE). Transmit DMA events are generated automatically upon transmit data ready, provided that DMA TX requests generation is enabled in the MCASP_XEVTCTL register. Similarly, Rx DMA event AREVT is triggered for each of the receive audio channel time slot. Receive DMA events are generated automatically upon receive data ready, provided that DMA RX requests generation is enabled in the MCASP_REVTCTL register.

11.5.1.4.11 McASP Audio FIFO (AFIFO)

The AFIFO contains two FIFOs: one Read FIFO (RFIFO), and one Write FIFO (WFIFO). The RFIFO and the WFIFO are the same size: 64 32-bit Words. To ensure backward compatibility with existing software, both the Read and Write FIFOs are disabled by default. See Figure 11-348 for a high-level block diagram of the AFIFO. The AFIFO may be enabled/disabled and configured via the WFIFOCTL and RFIFOCTL registers. Note that if the Read or Write FIFO is to be enabled, it must be enabled prior to initializing the receive/transmit section of the McASP.

Copyright © 2025 Texas Instruments Incorporated

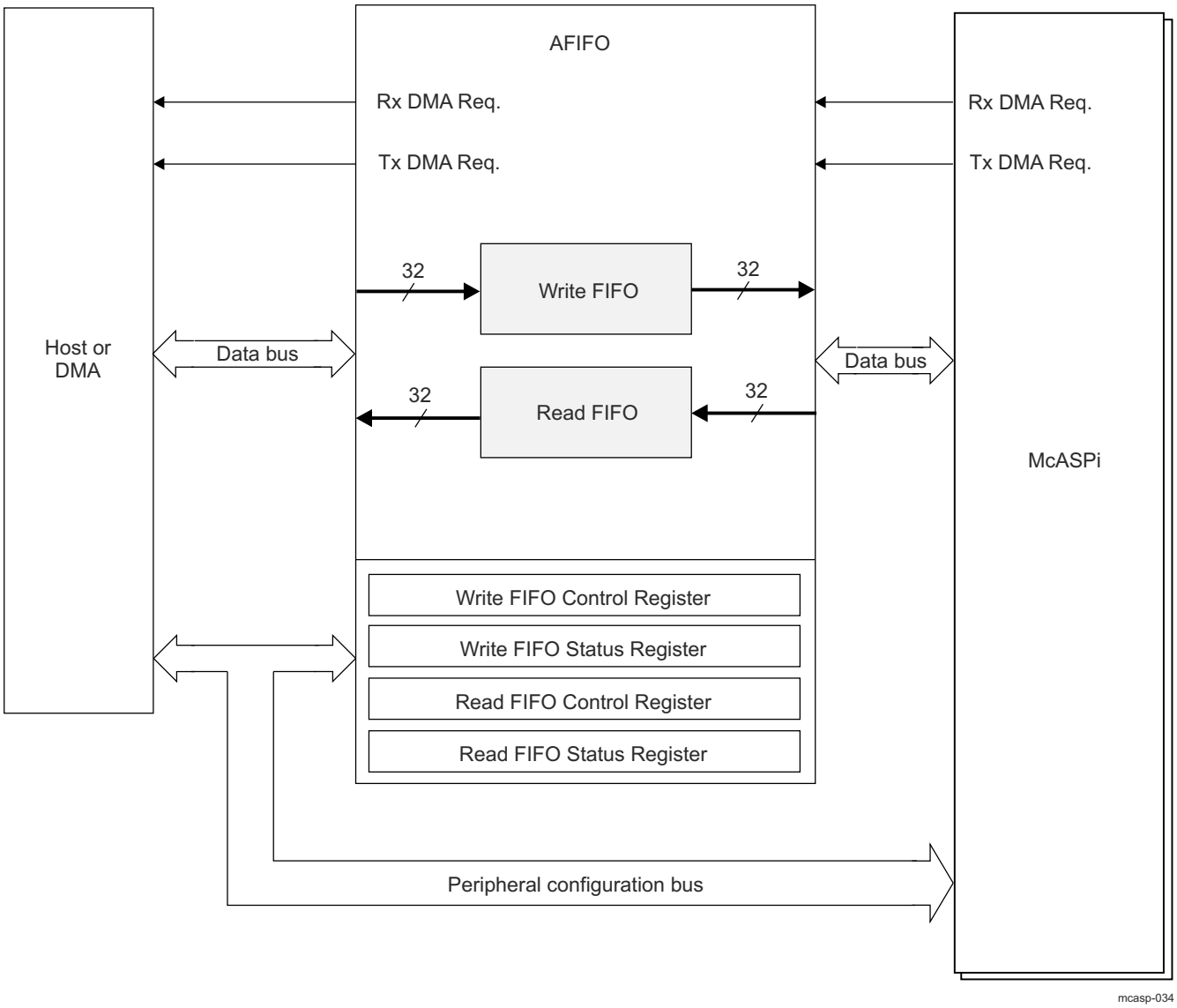

Figure 11-348. McASP Audio FIFO (AFIFO) Block Diagram

11.5.1.4.11.1 AFIFO Data Transmission

When the Write FIFO is disabled, transmit DMA requests pass through directly from the McASP to the host/DMA controller. Whether the WFIFO is enabled or disabled, the McASP generates transmit DMA requests as needed; the AFIFO is “invisible” to the McASP. When the Write FIFO is enabled, transmit DMA requests from the McASP are sent to the AFIFO, which in turn generates transmit DMA requests to the host/DMA controller. If the Write FIFO is enabled, upon a transmit DMA request from the McASP, the WFIFO writes WNUMDMA 32-bit words to the McASP if and when there are at least WNUMDMA words in the Write FIFO. If there are not, the WFIFO waits until this condition has been satisfied. At that point, it writes WNUMDMA words to the McASP. (See description for WFIFOCTL[7:0] WNUMDMA.) If the host CPU writes to the Write FIFO, independent of a transmit DMA request, the WFIFO will accept host writes until full. After this point, excess data will be discarded. Note that when the WFIFO is first enabled, it will immediately issue a transmit DMA request to the host. This is because it begins in an empty state, and is therefore ready to accept data.

11.5.1.4.11.1.1 Transmit DMA Event Pacer

The AFIFO may be configured to delay making a transmit DMA request to the host until the Write FIFO has enough space for a specified number of words. In this situation, the number of transmit DMA requests to the

Copyright © 2025 Texas Instruments Incorporated

host or DMA controller is reduced. If the Write FIFO has space to accept WNUMEVT 32-bit words, it generates a transmit DMA request to the host and then waits for a response. Once WNUMEVT words have been written to the FIFO, it checks again to see if there is space for WNUMEVT 32-bit words. If there is space, it generates another transmit DMA request to the host, and so on. In this fashion, the Write FIFO will attempt to stay filled. Note that if transmit DMA event pacing is desired, WFIFOCTL[15:8] WNUMEVT should be set to a non-zero integer multiple of the value in WFIFOCTL[7:0] WNUMDMA. If transmit DMA event pacing is not desired, then the value in WFIFOCTL[15:8] WNUMEVT should be set equal to the value in WFIFOCTL[7:0] WNUMDMA.

11.5.1.4.11.2 AFIFO Data Reception

When the Read FIFO is disabled, receive DMA requests pass through directly from McASP to the host/DMA controller. Whether the RFIFO is enabled or disabled, the McASP generates receive DMA requests as needed; the AFIFO is “invisible” to the McASP. When the Read FIFO is enabled, receive DMA requests from the McASP are sent to the AFIFO, which in turn generates receive DMA requests to the host/DMA controller. If the Read FIFO is enabled and the McASP makes a receive DMA request, the RFIFO reads RNUMDMA 32-bit words from the McASP, if and when the RFIFO has space for RNUMDMA words. If it does not, the RFIFO waits until this condition has been satisfied; at that point, it reads RNUMDMA words from the McASP. (See description for RFIFOCTL[7:0] RNUMDMA.) If the host CPU reads the Read FIFO, independent of a receive DMA request, and the RFIFO at that time contains less than RNUMEVT words, those words will be read correctly, emptying the FIFO.

11.5.1.4.11.2.1 Receive DMA Event Pacer

The AFIFO may be configured to delay making a receive DMA request to the host until the Read FIFO contains a specified number of words. In this situation, the number of receive DMA requests to the host or DMA controller is reduced. If the Read FIFO contains at least RNUMEVT 32-bit words, it generates a receive DMA request to the host and then waits for a response. Once RNUMEVT 32-bit words have been read from the RFIFO, the RFIFO checks again to see if it contains at least another RNUMEVT words. If it does, it generates another receive DMA request to the host, and so on. In this fashion, the Read FIFO will attempt to stay empty. Note that if receive DMA event pacing is desired, RFIFOCTL[15:8] RNUMEVT should be set to a non-zero integer multiple of the value in RFIFOCTL[7:0] RNUMDMA. If receive DMA event pacing is not desired, then the value in RFIFOCTL[15:8] RNUMEVT should be set equal to the value in RFIFOCTL[7:0] RNUMDMA.

11.5.1.4.11.3 Arbitration Between Transmit and Receive DMA Requests

If both the WFIFO and the RFIFO are enabled and a transmit DMA request and receive DMA request occur simultaneously, priority is given to the transmit DMA request. Once a transfer is in progress, it is allowed to complete. If only the WFIFO is enabled and a transmit DMA request and receive DMA request occur simultaneously, priority is given to the transmit DMA request. Once a transfer is in progress, it is allowed to complete. If only the RFIFO is enabled and a transmit DMA request and receive DMA request occur simultaneously, priority is given to the receive DMA request. Once a transfer is in progress, it is allowed to complete.

11.5.1.4.12 McASP Events and Interrupt Requests

Table 11-1344 lists all the transmit event flags. Table 11-1345 lists all the Receive event flags. Source of each of these TX/RX events can be a TX/RX channel from any McASPi serializer configured as transmitter or receiver respectivly.

Table 11-1344. TX Events [2]

Event Mask	Event Flag	Map to [1]	Description
MCASP_EVTCTLX[0] XUNDRN	MCASP_TXSTAT[0] XUNDRN	MCASPi_IRQ_AXEVT	Transmit buffer underrun
MCASP_EVTCTLX[1] XSYNCERR	MCASP_TXSTAT[1] XSYNCERR	MCASPi_IRQ_AXEVT	Unexpected transmit frame sync
MCASP_EVTCTLX[2] XCKFAIL	MCASP_TXSTAT[2] XCKFAIL	MCASPi_IRQ_AXEVT	Transmit clock failure
MCASP_EVTCTLX[3] XDMAERR	MCASP_TXSTAT[7] XDMAERR	MCASPi_IRQ_AXEVT	DATA port transmit error
MCASP_EVTCTLX[4] XLAST	MCASP_TXSTAT[4] XLAST	MCASPi_IRQ_AXEVT	Transmit last slot interrupt
MCASP_EVTCTLX[5] XDATA	MCASP_TXSTAT[5] XDATA	MCASPi_IRQ_AXEVT	Transmit data-ready interrupt
MCASP_EVTCTLX[7] XSTAFRM	MCASP_TXSTAT[6] XSTAFRM	MCASPi_IRQ_AXEVT	Transmit start of frame interrupt

Copyright © 2025 Texas Instruments Incorporated

Table 11-1344. TX Events [2] (continued)

Event Mask	Event Flag	Map to [1]	Description
n.a.	MCASP_TXSTAT[8] XERR	n.a.	OR-event of all Tx-error events: (XDMAERR | XCKFAIL | XUNDRN | XSYNCERR). It is cleared ONLY when all error flags are cleared
n.a.	MCASP_TXSTAT[3] XTDMSLOT	n.a.	Qualifies the current TDM slot as an odd or an even slot.

(1) Every McASPi module generates separate IRQ event.
(2) Global events for all transmitting serializers in a single McASPi module.

Table 11-1345. RX Events [2]

Event Mask	Event Flag	Map to[1]	Description
MCASP_EVTCTLR[0] ROVRN	MCASP_RXSTAT[0] ROVRN	MCASPi_IRQ_AREVT	Receive buffer overrun
MCASP_EVTCTLR[1] RSYNCERR	MCASP_RXSTAT[1] RSYNCERR	MCASPi_IRQ_AREVT	Unexpected receive frame sync
MCASP_EVTCTLR[2] RCKFAIL	MCASP_RXSTAT[2] RCKFAIL	MCASPi_IRQ_AREVT	Receive clock failure
MCASP_EVTCTLR[3] RDMAERR	MCASP_RXSTAT[7] RDMAERR	MCASPi_IRQ_AREVT	DATA port receive error
MCASP_EVTCTLR[4] RLAST	MCASP_RXSTAT[4] RLAST	MCASPi_IRQ_AREVT	Receive last slot
MCASP_EVTCTLR[5] RDATA	MCASP_RXSTAT[5] RDATA	MCASPi_IRQ_AREVT	Receive data-ready
MCASP_EVTCTLR[7] RSTAFRM	MCASP_RXSTAT[6] RSTAFRM	MCASPi_IRQ_AREVT	Receive start of frame
n.a.	MCASP_RXSTAT[8] RERR	n.a.	OR-event of all Rx-error events: (RDMAERR | RCKFAIL | ROVRN | RSYNCERR). RERR event is cleared once all error flags are cleared.
n.a.	MCASP_RXSTAT[3] RTDMSLOT	n.a.	Qualifies the current TDM slot as an odd or an even slot.

(1) Every McASP module generates separate IRQ event.
(2) Global events for all receiving serializers in a single McASPi module. These events and masks are available in same format for every McASPi module

Software has to read the MCASP_TXSTAT/MCASP_RXSTAT register to determine which event occurs at a global level for McASP Tx/Rx logic. In addition user software has to scan the XRDY/RRDY read-only flags in the MCASP_XRSRCTLn registers to determine which active serializer is the actual source of the event.

A Tx interrupt line (MCASPi_IRQ_AXEVT) is asserted (active high) when one of the MCASP_TXSTAT notified events occurs, provided that it is enabled in its corresponding MCASP_EVTCTLX bit. Similarly, a Rx interrupt line (MCASPi_IRQ_AREVT) is asserted (active high) when one of MCASP_RXSTAT notified events occurs, provided that it is enabled in its corresponding MCASP_EVTCTLR bit. See also Section 11.5.1.4.12.4, *Multiple Interrupts* and the Section 11.5.1.4.10.1, *Data Ready Status and Event/Interrupt Generation*.

11.5.1.4.12.1 Transmit Data Ready Event and Interrupt

The transmit data-ready interrupt (XDATA) is generated if XDATA is 1 in the MCASP_TXSTAT register and XDATA is enabled in MCASP_EVTCTLX. The Section 11.5.1.4.10.1, *Data Ready Status and Event/Interrupt Generation*, provides details on when XDATA is set in the MCASP_TXSTAT register.

A transmit-start-of-frame interrupt (XSTAFRM) is triggered by the recognition of a transmit frame sync.

A transmit-last-slot interrupt (XLAST) is a qualified version of the data-ready interrupt (XDATA). It has the same behavior than the data-ready interrupt, but is further qualified by having the data requested belonging to the last slot (the slot that just ended is the next-to-last TDM slot, the current slot is the last slot).

11.5.1.4.12.2 Receive Data Ready Event and Interrupt

The receive data-ready interrupt (RDATA) is generated if RDATA is 1 in the MCASP_RXSTAT register and RDATA is enabled in MCASP_EVTCTLR. The Section 11.5.1.4.10.1, *Data Ready Status and Event/Interrupt Generation*, provides details on when RDATA flag is set in the MCASP_RXSTAT register.

Copyright © 2025 Texas Instruments Incorporated

A receiver start of frame (RSTAFRM) interrupt is triggered by the recognition of a receiver frame sync.

A receiver last slot (RLAST) interrupt is a qualified version of the data ready interrupt (RDATA). It has the same behavior as the data ready interrupt, but is further qualified by having the data in the buffer come from the last TDM time slot (the slot that just ended was last TDM slot).

11.5.1.4.12.3 Error Interrupt

Upon detection, the following error conditions generate interrupt flags:

In the transmit status register (MCASP_TXSTAT):

- Transmit underrun (XUNDRN)
- Unexpected transmit frame sync (XSYNCERR)
- Transmit clock failure (XCKFAIL)
- Transmit DATA port error (XDMAERR)

Each interrupt source also has a corresponding enable bit in the transmit interrupt control register (MCASP_EVTCTLX). If the enable bit is set, an interrupt is requested when the interrupt flag is set in MCASP_TXSTAT. If the enable bit is not set, no interrupt request is generated. However, the interrupt flag may be polled.

In the receive status register (MCASP_RXSTAT) :

- Receiver overrun (ROVRN)
- Unexpected receive frame sync (RSYNCERR)
- Receive clock failure (RCKFAIL)
- Receive DATA port error (RDMAERR)

Each interrupt source also has a corresponding enable bit in the receive interrupt control register (MCASP_EVTCTLR). If the enable bit is set, an interrupt is requested when the interrupt flag is set in MCASP_RXSTAT. If the enable bit is not set, no interrupt request is generated. However, the interrupt flag may be polled.

11.5.1.4.12.4 Multiple Interrupts

This only applies to interrupts and not to DMA requests. The following terms are defined:

- **Active Interrupt Request:** a flag in MCASP_TXSTAT is set and the interrupt is enabled in MCASP_EVTCTLX.
- **Outstanding Interrupt Request:** An interrupt request has been issued on one of the McASP transmit interrupt port, but that request has not yet been serviced.
- **Serviced:** The CPUs write to MCASP_TXSTAT to clear one or more of the active interrupt request flags.

The first interrupt request to become active for the serializer with the interrupt flag set in MCASP_TXSTAT/ MCASP_RXSTAT and the interrupt enabled in MCASP_EVTCTLX/MCASP_EVTCTLR generates a request on the McASP transmit or receive interrupt port.

If more than one interrupt request becomes active in the same cycle, a single interrupt request is generated on the McASP transmit or receive interrupt port. Subsequent interrupt requests that become active while the first interrupt request is outstanding do not immediately generate a new request pulse on the McASP transmit or receive interrupt port.

The interrupt is serviced with the CPU writing to MCASP_TXSTAT/MCASP_RXSTAT. If any interrupt requests are active after the write, a new request is generated on the McASP transmit or receive interrupt port.

One outstanding interrupt request is allowed on each port, so a transmit and a receive interrupt request may both be outstanding at the same time.

11.5.1.4.13 DMA Requests

The McASP can generate one DMA request to the DMA_CROSSBAR to transmit (MCASPi_DREQ_TX) or receive (MCASPi_DREQ_RX) data. A DMA request to transmit data is generated if the XDATDMA bit in the

Copyright © 2025 Texas Instruments Incorporated

MCASP_XEVTCTL register is cleared. A DMA request to receive data is generated if the RDATDMA bit in the MCASP_REVTCTL register is cleared.

11.5.1.4.14 Loopback Modes

The McASP features a digital loopback mode (DLB) that allows loopback test transfers in TDM mode between McASP transmitters and receivers within the same device. In loopback mode, the output of a transmit serializer is connected internally to the input of a receive serializer. Therefore, a receiver data can be checked against a transmitter data to ensure that the McASP settings are correct. Digital loopback mode applies to TDM mode only (2 to 32 slots in a frame). It does not apply to DIT mode (XMOD = 0x180) or burst mode (XMOD = 0).

Figure 11-349shows the basic logical connection of the serializers in loopback mode.

Copyright © 2025 Texas Instruments Incorporated

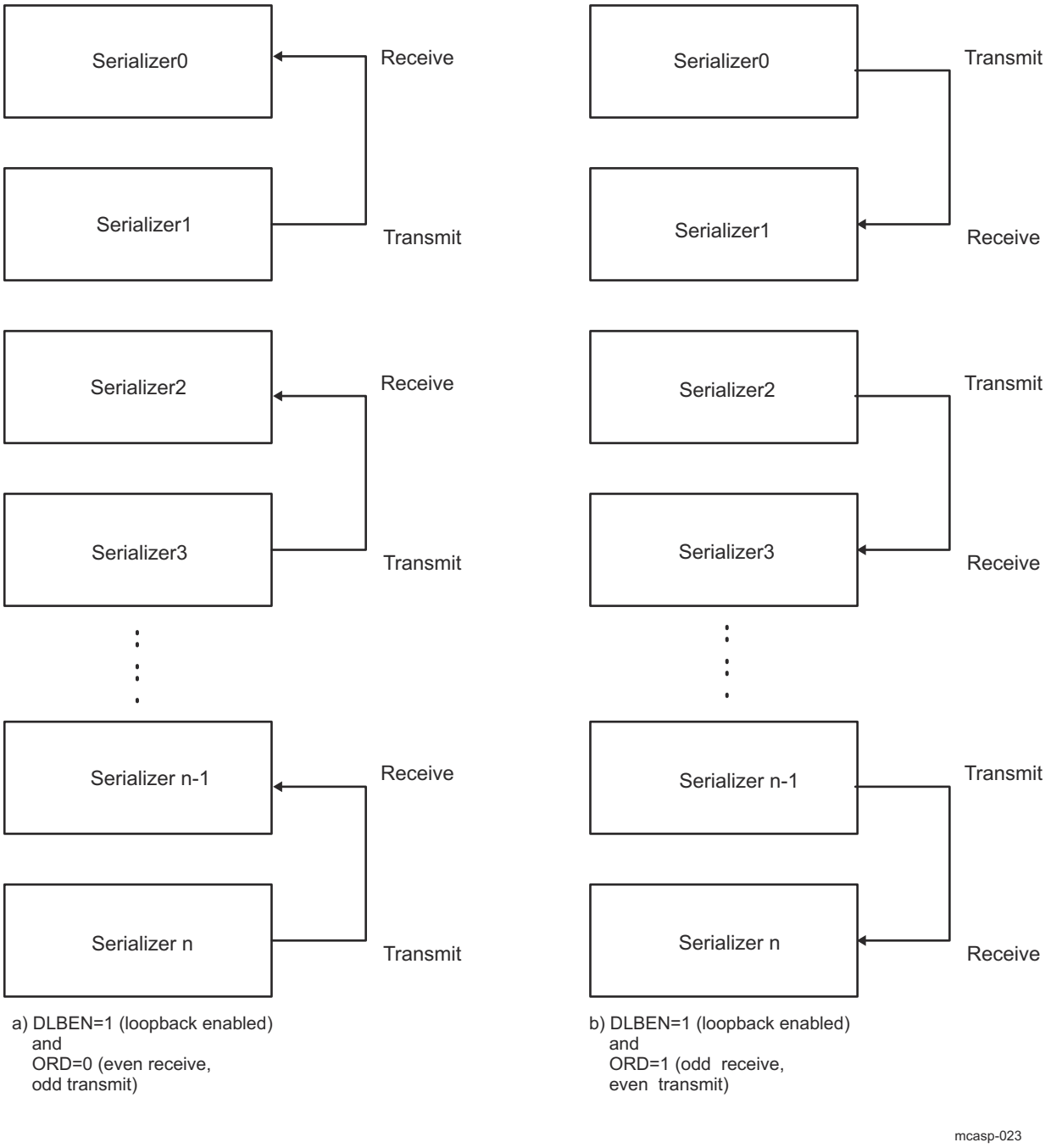

Figure 11-349. McASP Serializers Operation in Loopback Mode

Two types of loopback connections are possible, selected by the ORD bit in the digital loopback control register - MCASP_LBCTL as follows:

- ORD = 0: Outputs of odd serializers are connected to inputs of even serializers. If this mode is selected, the odd serializers must be configured as transmitters and even serializers as receivers.
- ORD = 1: Outputs of even serializers are connected to inputs of odd serializers. If this mode is selected, the even serializers must be configured as transmitters and odd serializers as receivers.

User can choose in software (bit IOLBEN of the MCASP_LBCTL) between a McASP module internal loopback and a device I/O level loopback.

Copyright © 2025 Texas Instruments Incorporated

When a **McASP internal loopback** is selected (MCASP_LBCTL[4] IOLBEN=0b0), it is NOT necessary to configure MCASP_PFUNC and MCASP_PDIR registers for McASP pin settings. Nevertheless, data can be optionally made externally visible at the I/O pin of the transmit serializer, if the pin is configured as a McASP output pin by setting the corresponding MCASP_PFUNC bit to 0 (i.e. to function as McASP, not GPIO) and MCASP_PDIR bit to 1 (output).

When a **device I/O level loopback** is selected (MCASP_LBCTL[4] IOLBEN=0b1), the MCASP_PFUNC and MCASP_PDIR registers must be configured with the appropriate settings for all AXRn pins, according to ORD bit configuration.

In case of device I/O loopback, the connectivity is externally applied between device pads (i.e. reaching device I/O buffers).

Hence, the corresponding padconfiguration registers must be appropriately configured in the device Control Module - CTRL_MODULE_CORE_PAD. For more details, see *Pad Configuration Rregisters* in *Control Module*.

When In loopback mode, the transmit clock and frame sync are used by both the transmit and receive sections of the McASP. The transmit and receive sections operate synchronously. This is achieved by setting the MODE bitfield of the MCASP_LBCTL register to 0x1 and the ASYNC bit of the MCASP_ACLKXCTL register to 0b0.

11.5.1.4.14.1 Loopback Mode Configurations

This is a summary of the settings required for digital loopback mode for TDM format :

- The MCASP_LBCTL[0] DLBEN bit must be set to 0b1 to enable a loopback mode. It must be kept at 0b0 during normal McASP operation.
- The MCASP_LBCTL[4] IOLBEN bit must be set to select between internal (McASP local) loopback mode or device I/O level loopback mode.
- The MCASP_LBCTL[3:2] MODE bitfield must be set to 0x1 for both the transmit and receive sections to use the transmit clock and frame sync generator.
- The MCASP_LBCTL[1] ORD must be programmed appropriately to select odd or even serializers to be transmitters or receivers.
- The corresponding serializers must be configured accordingly.
- The bit - MCASP_ACLKXCTL[6] ASYNC must be cleared to 0b0 to ensure synchronous transmit and receive operations.
- The bitfields - MCASP_RXFMCTL[15:7] RMOD and MCASP_TXFMCTL[15:7] XMOD must be set within range (0x2- 0x20) to indicate TDM mode.

Note

Loopback mode does not apply to DIT or burst mode, because McASP receivers do NOT natively support DIR - reception.

11.5.1.4.15 Error Reporting

The McASP includes error-checking capability for the serial protocol and data underrun. In addition, the McASP includes a timer that continually measures the high-frequency master clock every 32 AHCLKX clock cycles. The value of the timer can be read to get a measurement of the clock frequency and has a minimum and maximum range setting that can set an error flag if the master clock goes out of a specified range.

When one or more errors (software selectable) are detected, an interrupt can be generated if desired, based on one or more error sources.

11.5.1.4.15.1 Buffer Underrun Error -Transmitter

A buffer underrun occurs when a serializer is instructed by the transmit state-machine to transfer data from XRBUFn buffer to XRSRn shift register, but the corresponding (MCASP_TXBUFn) register has not yet been written with new data since the last time the transfer occurred. When this occurs, the transmit state-machine sets the XUNDRN flag.

Copyright © 2025 Texas Instruments Incorporated

An underrun is checked only once per time slot. The MCASP_TXSTAT[0] XUNDRN flag is set when an underrun condition occurs. Once set, the XUNDRN flag remains set until the host explicitly writes 1 to the XUNDRN bit to clear it.

In DIT mode, a pair of BMC zeros is shifted out when an underrun occurs (four bit times at 128 bfs). By shifting out a pair of zeros, a clock can be recovered on the receiver. To recover, reset the McASP and restart with the proper initialization.

In TDM mode, during an underrun case, a long stream of zeros are shifted out causing the DACs to mute. To recover, reset the McASP and start again with the proper initialization.

11.5.1.4.15.2 Buffer Overrun Error-Receiver

A buffer overrun occurs when a serializer is instructed to transfer data from XRSRn shift register to XRBUFn receiver buffer, but the corresponding MCASP_RXBUFn register has not yet been read since the last time the transfer occured. When this occurs, the receiver state machine sets the overrun flag - ROVRN. However, the individual serializer writes over the data in the XRBUFn buffer register (destroying the previous sample) and continues shifting.

An overrun is checked only once per time slot. The MCASP_RXSTAT[0] ROVRN flag is set when an overrun condition occurs. It is possible that an overrun occurs on one time slot but then the host catches up and does not cause an overrun on the following time slots. However, once the ROVRN flag is set, it remains set until the host explicitly writes a 1 to the ROVRN bit to clear the ROVRN bit.

11.5.1.4.15.3 DATA Port Error - Transmitter

A transmit DATA port error, as indicated by the XDMAERR flag in the MCASP_TXSTAT register, occurs when the DMA or device CPU writes more words to the DATA port of the McASP than it should.

The MCASP_TXSTAT[7] XDMAERR=0b1 indicates that the DMA or device CPU wrote too many words to the McASP DATA port for a given transmit DMA event. Writing too few words results in a transmit underrun error setting XUNDRN in MCASP_TXSTAT.

While XDMAERR occurs infrequently, an occurrence indicates a serious loss of synchronization between the McASP and the DMA or device CPU. The McASP transmitter and the DMA must be reinitialized to resynchronize them.

11.5.1.4.15.4 DATA Port Error - Receiver

A receive DATA port error, as indicated by the RDMAERR flag in the MCASP_RXSTAT register, occurs when the DMA or device CPU reads more words from the DATA port of the McASP than it should.

The MCASP_RXSTAT[7] RDMAERR indicates that the DMA or device CPU read too many words from the McASP DATA port for a given receive AREVT event. Reading too few words results in a receiver overrun error setting ROVRN in MCASP_RXSTAT.

While RDMAERR occurs infrequently, an occurrence indicates a serious loss of synchronization between the McASP and the DMA or device CPU. The McASP receiver and the DMA must be reinitialized to resynchronize them.

11.5.1.4.15.5 Unexpected Frame Sync Error

An unexpected frame sync occurs in when:

- in burst mode and TDM mode, the next active edge of the frame sync occurs early such that the current slot will not be completed by the time the next slot is scheduled to begin.
- in TDM mode, an unexpected frame sync occurs also if the frame sync does NOT occur exactly during the correct bit clock (not a cycle earlier or later) and before slot 0.

When an unexpected frame sync occurs, there are two possible actions depending upon when the unexpected frame sync occurs:

Copyright © 2025 Texas Instruments Incorporated

1. **Early:** An early unexpected frame sync occurs when the McASP is in the process of completing the current frame and a new frame sync is detected (not including overlap that occurs due to a 1 or 2 bit frame sync delay). When an early unexpected frame sync occurs:
   - Error event flag is set (XSYNCERR, if an unexpected transmit frame sync occurs; RSYNCERR, if an unexpected receive frame sync occurs).
   - Current frame is not resynchronized. The number of bits in the current frame is completed. The next frame sync, which occurs after the current frame is completed, will be resynchronized.
2. **Late:** A late unexpected frame sync occurs when there is a gap or delay between the last bit of the previous frame and the first bit of the next frame. When a late unexpected frame sync occurs (as soon as the gap is detected):
   - Error event flag is set (XSYNCERR, if an unexpected transmit frame sync occurs; RSYNCERR, if an unexpected receive frame sync occurs).
   - Resynchronization occurs upon the arrival of the next frame sync.

Late frame sync is detected the same way in burst mode and TDM mode. However, in burst mode, late frame sync is not meaningful and its interrupt enable should not be set.

11.5.1.4.15.6 Clock Failure Detection

11.5.1.4.15.6.1 Clock Failure Check Startup

It is initially expected of the clock failure circuits to generate an error until at least one measurement is taken. Therefore, the clock failure interrupts, clock switch, and mute functions should not be enabled immediately, but only after a specific startup procedure.

To start the transmit clock failure check procedure:

1. Configure the transmit clock failure detect logic (XMIN, XMAX, XPS) in the transmit clock check control register (MCASP_TXCLKCHK).
2. Clear the transmit clock failure flag (XCKFAIL) in the transmit status register (MCASP_TXSTAT).
3. Wait until the first measurement is taken (> 32 AHCLKX clock periods).
4. Verify that no clock failure is detected.
5. Repeat Step 2 through Step 4 until the clock is running and is no longer issuing clock failure errors.
6. After the transmit clock is measured and falls within the acceptable range, the following can be enabled:
   a. The transmit clock failure interrupt enable bit (XCKFAIL) in the transmitter interrupt control register (MCASP_EVTCTLX)

To start the receive clock failure check procedure:

1. Configure receive clock failure detect logic (RMIN, RMAX, RPS) in the receive clock check control register (MCASP_RXCLKCHK).
2. Clear receive clock failure flag (RCKFAIL) in the receive status register (MCASP_RXSTAT).
3. Wait until first measurement is taken (> 32 AHCLKR clock periods).
4. Verify no clock failure is detected.
5. Repeat steps 2–4 until clock is running and is no longer issuing clock failure errors.
6. After the receive clock is measured and falls within the acceptable range, the following may be enabled:
   a. the receive clock failure (RCKFAIL) interrupt enable bit in the receive interrupt control register (MCASP_EVTCTLR)

11.5.1.4.15.6.2 Transmit Clock Failure Check and Recovery

The transmit clock failure check circuit (see Figure 11-350) works off the internal McASP interface clock and the external high-frequency serial clock (AHCLKX). It continually counts the number of interface clocks for every 32 high-rate serial clock (AHCLKX) periods, and stores the count in XCNT of the transmit clock check control register (MCASP_TXCLKCHK) every 32 high-rate serial clock cycles.

Copyright © 2025 Texas Instruments Incorporated

The logic compares the count against a user-defined minimum allowable boundary (XMIN), and automatically flags an interrupt (XCKFAIL in MCASP_TXSTAT) when an out-of-range condition occurs. An out-of-range minimum condition occurs when the count is less than XMIN. The logic continually compares the current count (from the running interface clock counter) to the maximum allowable boundary (XMAX). This is so that if the external clock completely stops, the counter value is not copied to XCNT. An out-of-range maximum condition occurs when the count is greater than XMAX. The XMIN and XMAX fields are 8-bit unsigned values, and the comparison is performed using unsigned arithmetic.

An out-of-range count may indicate that an unstable clock was detected or that the audio source has changed and a new sample rate is being used.

For the transmit clock failure check circuit to operate correctly, the high-frequency serial clock divider must be taken out of reset.

If a clock failure is detected, the transmit clock failure flag (XCKFAIL) in MCASP_TXSTAT is set. This causes an interrupt if the transmit clock failure interrupt enable bit (XCKFAIL) in MCASP_EVTCTLX is set.

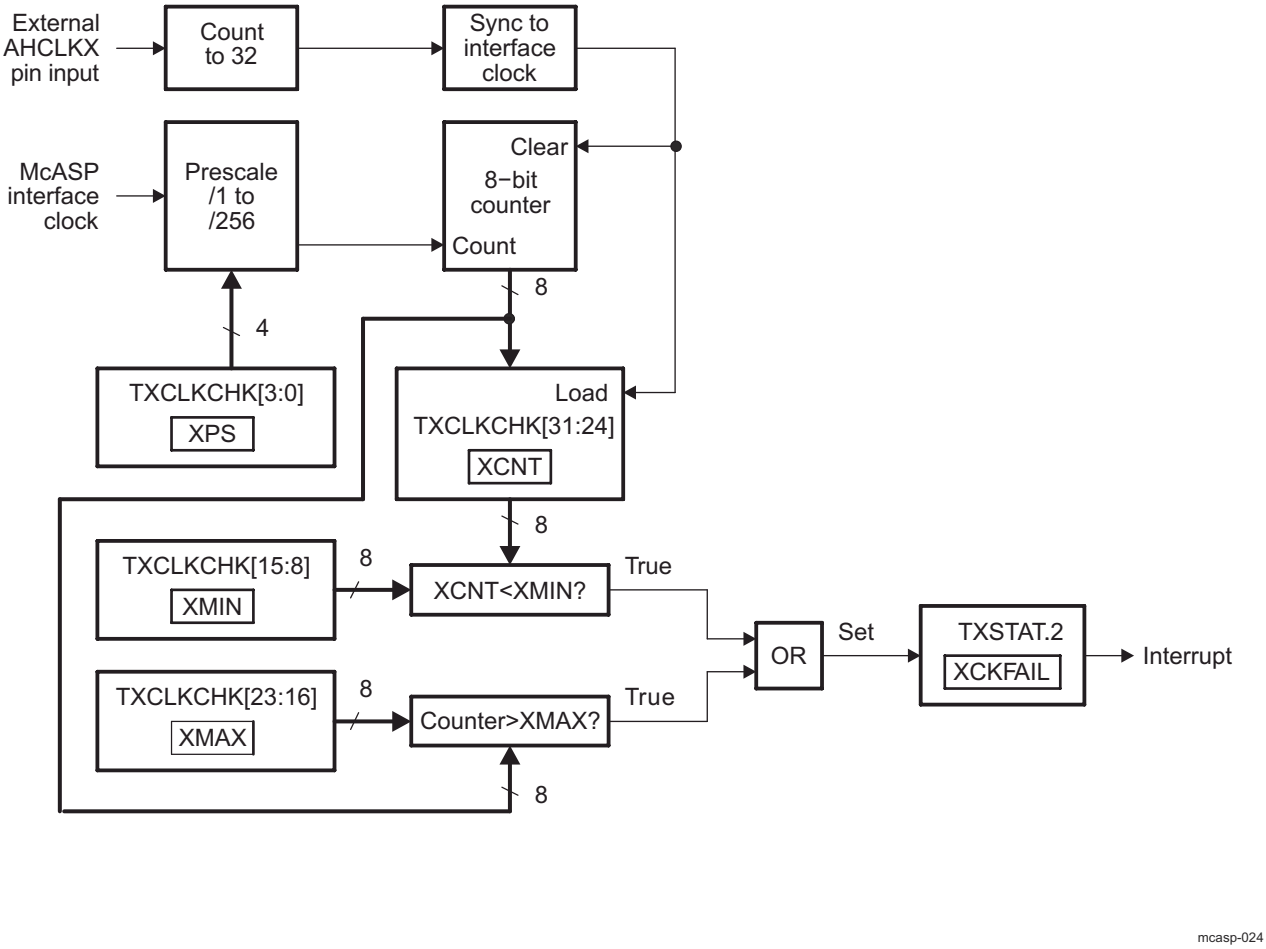

Figure 11-350. Transmit Clock Failure Detection Circuit Block Diagram

11.5.1.4.15.6.3 Receive Clock Failure Check and Recovery

The receive clock failure check circuit (see Figure 11-351) works off both the internal McASP interface clock and the high-frequency serial clock (AHCLKR) coming from the device clock generator. It continually counts the number of interface clocks for every 32 high rate serial clock (AHCLKR) periods, and stores the count in RCNT of the receive clock check control register (MCASP_RXCLKCHK) every 32 high rate serial clock cycles.

Copyright © 2025 Texas Instruments Incorporated

The logic compares the count against a user-defined minimum allowable boundary (RMIN) and automatically flags an event (RCKFAIL in MCASP_RXSTAT) when an out-of-range condition occurs. An out-of-range minimum condition occurs when the count is smaller than RMIN. The logic continually compares the current count (from the running interface clock counter) against the maximum allowable boundary (RMAX). This is in case the external clock completely stops, so that the counter value is not copied to RCNT. An out-of-range maximum condition occurs when the count is greater than RMAX. Note that the RMIN and RMAX fields are 8-bit unsigned values, and the comparison is performed using unsigned arithmetic.

An out-of-range count may indicate either that an unstable clock was detected or that the audio source has changed and a new sample rate is being used.

In order for the receive clock failure check circuit to operate correctly, the high-frequency serial clock divider must be taken out of reset.

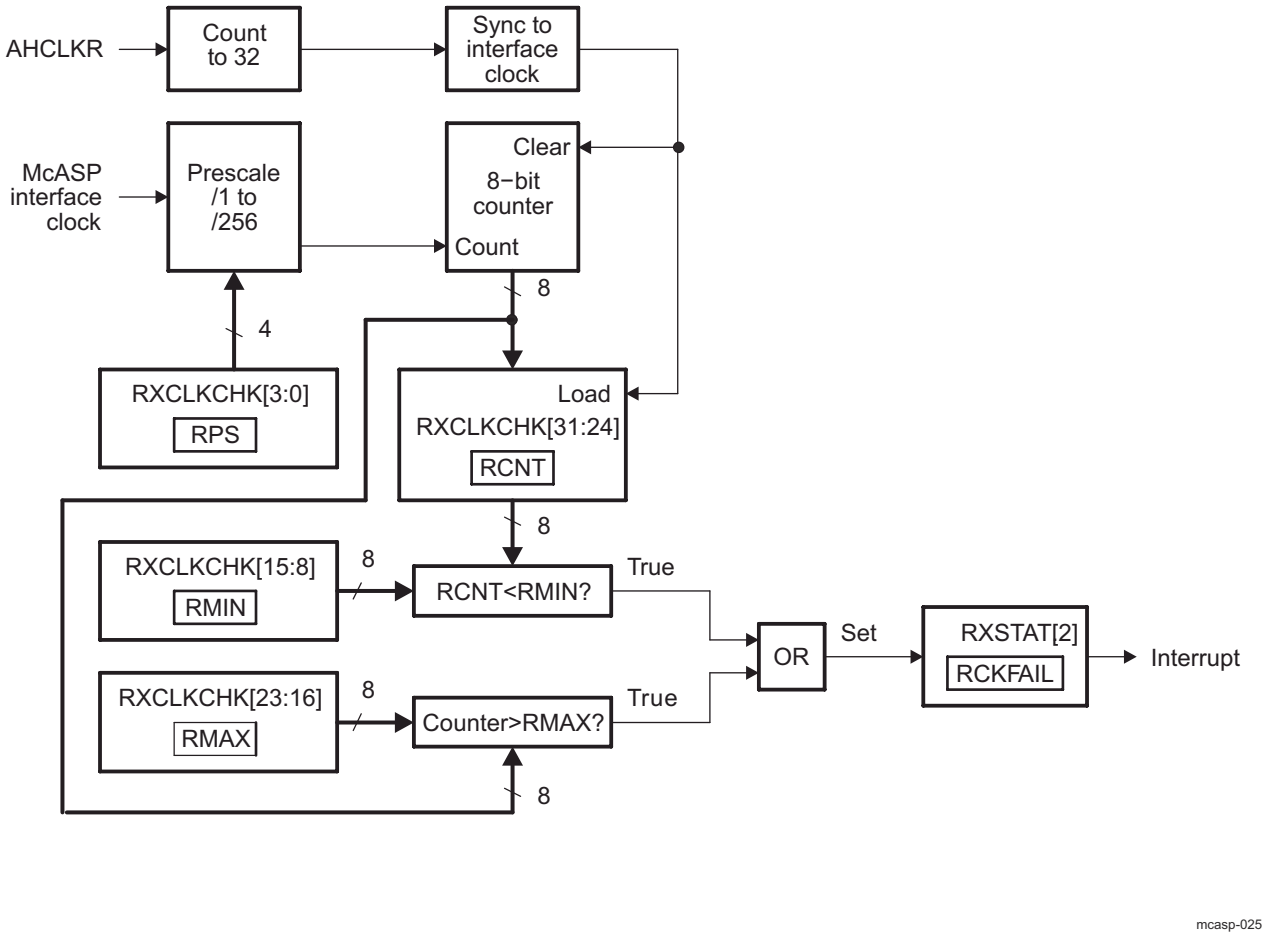

Figure 11-351. Receive Clock Failure Detection Circuit Block Diagram

Copyright © 2025 Texas Instruments Incorporated

11.5.1.5 McASP Low-Level Programming Model

This section describes the low-level hardware programming sequences for the configuration and use of the McASP module.

11.5.1.5.1 Global Initialization

11.5.1.5.1.1 Surrounding Modules Global Initialization

This section identifies the requirements for initializing the surrounding modules when the McASP module is used for the first time after a device reset. This initialization of surrounding modules is based on the integration and environment of the McASP (for more information, see Section 11.5.1.3, *McASP Integration*, and Section 11.5.1.2, *McASP Environment*).

Table 11-1346, describes the global initialization of surrounding modules.

Table 11-1346. Global Initialization of Surrounding Modules

Surrounding Modules	Comments
PRCM	Module functional and interface clocks must be enabled. (See *Clock Management Functional Description*, in *Power, Reset, and Clock Management*.)
Control module	Module-specific pad muxing and other pad configurations must be set in the control module. (See *Pad Configuration Registers*, in *Control Module*).
(Optional) DMA_CROSSBAR	DMA configuration must be done to enable the McASP DMA data channel requests. For more information on DMA_CROSSBAR module configuration, see *DMA_CROSSBAR Module Functional Description*, in *Control Module*.
(Optional) L4_PER2 and L3_MAIN Interconnects	For more information about the interconnect configuration, see *L3_MAIN Interconnect Overview* in *L3 Interconnect*.

Note

The DMA_CROSSBAR configurations are required when the interrupt and DMA-based communication modes are used. Further initialization of the selected DMA controllers of the host CPU must be done for full functionality of the McASP DMA lines.

11.5.1.5.1.2 McASP Global Initialization

11.5.1.5.1.2.1 Main Sequence – McASP Global Initialization for DIT-Transmission

The procedure in Table 11-1347 initializes the McASP serializers transmitters to operate in DIT-mode (S/PDIF-transmission protocol) after a power-on reset (POR).

CAUTION

Before performing McASP global initialization, If external clock ACLKR is used, it must be running already for proper synchronization of the MCASP_GBLCTL register.

Table 11-1347. McASP Transmitters Global Initialization for DIT-Mode Operation

Step	Register/Bit Field/Programming Model	Value
1. Apply software reset to different McASP components.	MCASP_GBLCTL[12:8]	0x00
2. Poll the bits to ensure the active reset value (0x00) is successfully latched into the register.	MCASP_GBLCTL[12:8]	=0x00
3. Configure the local power management.	PWRIDLESYSCONFIG[1:0] IDLE_MODE	0x1
4. Configure the transmit format unit.	See Section 11.5.1.5.1.2.1.1.	
5. Configure the transmit frame sync generator.	See Section 11.5.1.5.1.2.1.2.	
6. Configure the transmit clock generator.	See Section 11.5.1.5.1.2.1.3.	
7. Configure the TDM sequencer—set all slots active.	MCASP_TXTDM[31:0] XTDMS	0xFFFF FFFF

Copyright © 2025 Texas Instruments Incorporated

Table 11-1347. McASP Transmitters Global Initialization for DIT-Mode Operation (continued)

Step	Register/Bit Field/Programming Model	Value
8. Configure the desired n-th serializer (n=0 to 3) for transmit mode operation. (3)	MCASP_XRSRCTLn [1:0] SRMOD	0x1
9. Configure the McASP pins functionality.	See Section 11.5.1.5.1.2.1.4.	
10. Enable the McASP DIT - transmission mode.	MCASP_TXDITCTL[0] DITEN	0x1(2)
11. Configure DIT-specific subframe fields.	See Table 11-1352.	
12. Release from reset state the divider that outputs the AHCLKX clock.(1)	MCASP_GBLCTL[9] XHCLKRST	0x1
13. Poll the bit to ensure that it is successfully latched in the register.	MCASP_GBLCTL[9] XHCLKRST	=0x1
14. Release from reset state the divider that outputs the ACLKX clock. (1)	MCASP_GBLCTL[8] XCLKRST	0x1
15. Poll the bit to ensure that it is successfully latched in the register.	MCASP_GBLCTL[8] XCLKRST	=0x1

(1) During reset state the local McASP internal clock dividers maintain a 1:1 ratio at their outputs. The values stored in the MCASP_AHCLKXCTL and MCASP_ACLKXCT registers are ignored; hence, the transmission clock does not stop during the reset state of the dividers.
(2) This globally configures all active transmitters to operate in DIT-mode.
(3) For an unused serializer n, write MCASP_XRSRCTLn [1:0] SRMOD=0x0 to disable it.

11.5.1.5.1.2.1.1 Subsequence – Transmit Format Unit Configuration for DIT-Transmission

The procedure in Table 11-1348 configures the transmit frame format unit of the McASP module for a DIT-transmission.

Note

- The first transmit data bit always has a 0-bit delay.
- The bitstream is always transmitted in least-significant-bit (LSB)-first order.
- Pad value for extra bits in a certain slot is always 0.

Table 11-1348. Transmit Format Unit Configuration for DIT-Transmission

Step	Register/Bit Field/Programming Model	Value
Configure the slot size to 32 bits.	MCASP_TXFMT[7:4] XSSZ	0xF
IF: the data to transmit is left- aligned	Software test condition	
Set data mask in the range 0xFFFF FF00 – 0xFFFF 0000.	MCASP_TXMASK[31:0] XMASK	0x-(1)
Rotate data right by a multiple-of-4- bit positions.	MCASP_TXFMT[2:0] XROT	0x- (1)
ELSE		
Set data mask in the range 0x00FF FFFF– 0x0000 FFFF.	MCASP_TXMASK[31:0] XMASK	0x-(1)
Rotate data right by 0-bit positions.	MCASP_TXFMT[2:0] XROT	0x0
ENDIF		
Select to write data to active serializers transmit buffers using peripheral (CFG) or DATA port	MCASP_TXFMT[3] XBUSEL	0x-

(1) Refer to Section 11.5.1.4.4.1, *Transmit Fromat Unit* and Section 11.5.1.4.4.1.2, *DIT-Mode Transmission Data Alignment Settings.*

11.5.1.5.1.2.1.2 Subsequence – Transmit Frame Synchronization Generator Configuration for DIT-Transmission

The procedure in Table 11-1349 configures the transmit frame synchronization generator of the McASP module.

Note

The frame synchronization signal is always rising-edge active and always has a single-bit width.

Copyright © 2025 Texas Instruments Incorporated

Table 11-1349. Transmit Frame-Synchronization Generator Configuration for DIT-Transmission

Step	Register/Bit Field/Programming Model	Value
Select 384-slot size block.	MCASP_TXFMCTL[15:7] XMOD	0x180
Select internally-generated transmit frame sync.	MCASP_TXFMCTL[1] FSXM	0x1

11.5.1.5.1.2.1.3 Subsequence – Transmit Clock Generator Configuration for DIT-Transmission

Note

By default, the ACLKX and AHCLKX clocks are generated only from the McASP internal clock source.

The procedure in Table 11-1350 configures the transmit clock generator of the McASP module.

Table 11-1350. Transmit Clock Generator Configuration in DIT-Mode

Step	Register/Bit Field/Programming Model	Value
Set the divisor for the internally generated high frequency clock– AHCLKX.	MCASP_AHCLKXCTL[11:0] HCLKXDIV	0x-
Set he divisor for the internally generated transmission clock– ACLKX.	MCASP_ACLKXCTL[4:0] CLKXDIV	0x-
Configure the transmit clock failure detect logic.	See Section 11.5.1.4.15.6.1, *Clock Failure Check Startup*.	

11.5.1.5.1.2.1.4 Subsequence - McASP Pins Functional Configuration

The procedure in Table 11-1351 configures the McASP pins for McASP functionality.

Table 11-1351. McASP Pins Functional Configuration

Step	Register/Bit Field/Programming Model	Value
Configure module different pins to have McASP functionality.	MCASP_PFUNC[31:0]	0x0
Configure the McASP pins as outputs: AFSX AHCLKX ACLKX Desired i-th McASP data pin AXRi is configured as an output for DIT-transmission.	MCASP_PDIR[28] AFSX; MCASP_PDIR[27] AHCLKX; MCASP_PDIR[26] ACLKX; MCASP_PDIR [i] AXRi	0x1 0x1 0x1 0x1

11.5.1.5.1.2.1.5 Subsequence – DIT-specific Subframe Fields Configuration

The procedure in Table 11-1352 configures the DIT-specific subframe fields as part of the S/PDIF format data.

Table 11-1352. DIT-Specific Subframe Fields Configuration

Step	Register/Bit Field/Programming Model	Value
Configure the valid bit value for odd time slots.	MCASP_TXDITCTL[3] VB	0x-
Configure the valid bit value for even time slots.	MCASP_TXDITCTL[2] VA	0x-
Configure the user data bit for each subframe A and B in a 384-slot S/PDIF block.	MCASP_DITUDRAi[31:0] DITUDRAi, where i = 0 to 5 MCASP_DITUDRBi[31:0] DITUDRBi, where i = 0 to 5	0x- 0x-
Configure the channel status bit for each subframe A and B in a 384-slot S/PDIF block.	MCASP_DITCSRAi[31:0], where i = 0 to 5 MCASP_DITCSRBi[31:0], where i = 0 to 5	0x- 0x-

11.5.1.5.1.2.2 Main Sequence – McASP Global Initialization for TDM-Reception

The procedure in Table 11-1353 initializes a McASP serializer n receiver(s) to operate in TDM-mode (the only mode supported by McASP receivers) after a power-on reset (POR). This is used for I2S (2-slot TDM) and other TDM-based audio protocols reception.

Copyright © 2025 Texas Instruments Incorporated

CAUTION

Before performing McASP global initialization, If external clock ACLKR is used, it must be running already for proper synchronization of the MCASP_GBLCTL register.

Note

The McASP receivers support only TDM-frames (including 384-TDM frames) reception. DIT-frames reception (i.e. S/PDIF stream) can be implemented indirectly via an external DIR-chip converter with DIT-input and TDM (I2S)-compatible output connected to device McASP receiver input (TDM-only compatible).

Table 11-1353. McASP Receivers Global Initialization for TDM-Mode Operation

Step	Register/Bit Field/Programming Model	Value
1. Apply software reset to different McASP receive components.	MCASP_GBLCTL[4:0]	0x00
2. Poll the bits to ensure the active reset value (0x00) is successfully latched into the register.	MCASP_GBLCTL[4:0]	=0x00
3. Configure the local power management.	PWRIDLESYSCONFIG[1:0] IDLE_MODE	0x1
4. Configure the receive format unit.	See Section 11.5.1.5.1.2.2.1.	
5. Configure the receive frame sync generator.	See Section 11.5.1.5.1.2.2.2.	
6. Configure the receive clock generator.	See Section 11.5.1.5.1.2.2.3.	
7. Program all bits -RTDMSk (where k=0 to 31) according to the time slot characteristics desired (positions of active versus inactive slots within a frame).	MCASP_RXTDM [k] RTDMSk , where k=0 to 31	0x-
8. Configure the desired n-th serializer for receive mode operation. (4)	MCASP_XRSRCTLn [1:0] SRMOD	0x2
9. Configure the McASP pins functionality.	See Section 11.5.1.5.1.2.2.4.	
10. Optional: Configure a McASP Rx channel for a loopback operation (TDM mode only) in MCASP_LBCTL [31:0].	See Section 11.5.1.4.14.1, *Loopback Mode Configurations*.	0x-(5)
11. Release from reset state the divider that outputs the AHCLKR clock.(1) See also (2).	MCASP_GBLCTL[1] RHCLKRST	0x1
12. Poll the bit to ensure that it is successfully latched in the register. See also (2).	MCASP_GBLCTL[1] RHCLKRST	=0x1
13. Release from reset state the divider that outputs the ACLKR clock. (1) See also (3).	MCASP_GBLCTL[0] RCLKRST	0x1
14. Poll the bit to ensure that it is successfully latched in the register. See also (3).	MCASP_GBLCTL[0] RCLKRST	=0x1

(1) During reset state the local McASP internal clock dividers maintain a 1:1 ratio at their outputs. The values stored in the MCASP_AHCLKRCTL and MCASP_ACLKRCTL registers are ignored; hence, the reception clock does not stop during the reset state of the dividers.
(2) This step is necessary even if external high-frequency serial clocks are used.
(3) This step can be skipped if external serial clocks are used and they are running.
(4) For an unused serializer n, write MCASP_XRSRCTLn [1:0] SRMOD=0x0 to disable it.
(5) In this case the receiver clock and frame sync are derived from the McASP transmitter logic, so MCASP_ACLKXCTL[6] ASYNC must be set to 0b0. Neither McASP internal receiver clock and frame sync generators, nor external clock and frame sync source are used.

Copyright © 2025 Texas Instruments Incorporated

11.5.1.5.1.2.2.1 Subsequence – Receive Format Unit Configuration in TDM Mode

The procedure in Table 11-1354 configures the receive frame format unit of the McASP module for TDM slots reception.

Table 11-1354. Receive Format Unit Configuration for TDM-Reception

Step	Register/Bit Field/Programming Model	Value
Configure the desired TDM-slot size	MCASP_RXFMT[7:4] RSSZ	0x-(1)
Set data mask out value (0x0000 0000 - 0xFFFF FFFF).	MCASP_RXMASK[31:0] RMASK	0x-(2)
Select a padding value for masked-out bits.	MCASP_RXFMT[14:13] RPAD	0x-
Specify position (0x0-0x1F) of the bit in corresponding register MCASP_RXBUFn which value to be used as a pad value in case MCASP_RXFMT[14:13] RPAD=0x2.	MCASP_RXFMT[12:8] RPBIT	0x-
Rotate data right by a multiple of 4- bit positions.	MCASP_RXFMT[2:0] RROT	0x- (3)
Received stream bit order (LSB- or MSB-first). Must be set to 0x1 for an I2S stream reception (MSB-first).	MCASP_RXFMT[15] RRVRS	0x- (3)
Specify a delay between frame sync and first bit of data in number of bits. Must be set to 0x1 for an I2S stream reception.	MCASP_RXFMT[17:16] RDATDLY	0x-
Select to read data from active serializers receive buffers using peripheral (CFG) or DATA port	MCASP_RXFMT[3] RBUSEL	0x-

(1) Refer to Section 11.5.1.4.4.2, *Receive Format Unit*, regarding options for received TDM-slot sizes.
(2) For more details on Rx masking value, refer to Section 11.5.1.4.4.2.1, *TDM - Mode Reception Data Alignment Settings*
(3) For more details on rotation and received TDM stream bit order, refer to Section 11.5.1.4.4.2.1, *TDM - Mode Reception Data Alignment Settings* and Table 11-1341, *McASP RFU Settings*.

11.5.1.5.1.2.2.2 Subsequence – Receive Frame Synchronization Generator Configuration in TDM Mode

The procedure in Table 11-1355 configures the transmit frame synchronization generator of the McASP module.

Note

The same bit - MCASP_ACLKXCTL[6] ASYNC which is used to determine if McASP receivers and transmitters work synchronously on the same clock, is also used to define if receiver frame sync is derived from the transmit frame sync generator, or generated independently in the receiver (either inernally or externally sourced). Hence, the settings in below table Table 11-1355 have no effect, if MCASP_ACLKXCTL[6] ASYNC = 0.

Table 11-1355. Receive Frame-Synchronization Generator Configuration for TDM-Reception

Step	Register/Bit Field/Programming Model	Value
Select number of TDM slots per frame. Must be set to 0x2, in case of an I2S-reception. For more details on frame-sync generator, refer to Section 11.5.1.4.2.3.	MCASP_RXFMCTL[15:7] RMOD	0x-(1)
Choose the receive frame sync width -single bit/single word. For more details on frame-sync generator, refer to Section 11.5.1.4.2.3.	MCASP_RXFMCTL[4] FRWID	0x-
Select start of received frame sync polarity - rising / falling edge. For more details on frame-sync generator, refer to Section 11.5.1.4.2.3.	MCASP_RXFMCTL[0] FSRP	0x-
IFreceive frame sync - FS is internally generated	Software test condition	
Select internally- generated receive frame sync. For more details on frame-sync generator, refer to Section 11.5.1.4.2.3.	MCASP_RXFMCTL[1] FSRM	0b1

Copyright © 2025 Texas Instruments Incorporated

Table 11-1355. Receive Frame-Synchronization Generator Configuration for TDM-Reception (continued)

Step	Register/Bit Field/Programming Model	Value
If McASP receiver is required to output internally generated frame, AFSR pin must be set as an output in step 9 of the sequence documented in the Table 11-1353. This must not be done in current step because the frame control register - MCASP_TXFMCTL must be appropriately configured prior to AFSR pin outputting a frame to an external device.	MCASP_PDIR[31] AFSR	0b1
ELSE		
Select externally- generated receive frame sync. For more details on frame-sync generator, refer to Section 11.5.1.4.2.3.	MCASP_RXFMCTL[1] FSRM	0b0
Setup the AFSR pin as input (device level: mcaspi_fsr)	MCASP_PDIR[31] AFSR	0b0
ENDIF		
To generate McASP receive frame sync in receiver logic, select an asynchronous frame sync.	MCASP_ACLKXCTL[6] ASYNC	0b1

(1) Must be set to 0x180 in case of 384-TDM slot frame reception from a DIR component I2S-output. For more details on TDM-frame settings, refer to Section 11.5.1.4.9.2 .

11.5.1.5.1.2.2.3 Subsequence – Receive Clock Generator Configuration

The procedure in Table 11-1356 configures the receive clock generator of the McASP module.

Note

The settings in below table Table 11-1356 have no effect, if MCASP_ACLKXCTL[6] ASYNC = 0 (i.e. receive clock is sourced from the inverted version of the transmit clock). For example, such is the case when McASP loopback mode is used.

Table 11-1356. Receive Clock Generator Configuration

Step	Register/Bit Field/Programming Model	Value
To use the McASP receive clock generator, select an asynchronous receiver clock schema (ASYNC=1). Otherwise an inverted version of transmit clock XCLK is used (receiver synchronized with transmitter).	MCASP_ACLKXCTL[6] ASYNC	0b1
IF receive clock - RCLK is internally generated	Software test condition	
The high-speed receive clock - AHCLKR is internally generated based on AUXCLK		
Select an internally-generated high-frequency clock.	MCASP_AHCLKRCTL[15] HCLKRM	0b1
Select the internal high-speed clock source polarity: non-inverted or inverted.	MCASP_AHCLKRCTL[14] HCLKRP	0x-
Set the divisor for the internally generated high-frequency clock – AHCLKR in range (1 - 4096).	MCASP_AHCLKRCTL[11:0] HCLKRDIV	0x-
Select an internally-generated receive clock.	MCASP_ACLKRCTL[5] CLKRM	0b1
Receiver samples on rising/falling edge. Select Rx sampling on the rising edge if transmitter shifts out on falling edge, and vice versa.	MCASP_ACLKRCTL[7] CLKRP	0x-
Set the divisor for the internally generated receive clock– ACLKR in range (1 - 32).	MCASP_ACLKRCTL[4:0] CLKRDIV	0x-

Copyright © 2025 Texas Instruments Incorporated

Table 11-1356. Receive Clock Generator Configuration (continued)

Step	Register/Bit Field/Programming Model	Value
Optional: If McASP receiver is required to output internally generated clock, ACLKR pin must be set as an output in step 9 of the sequence documented in the Table 11-1353. This must not be done in current step because the clock control register - MCASP_ACLKRCTL must be appropriately configured prior to ACLKR pin outputting a receive clock to an external device.	MCASP_PDIR[29] ACLKR	0b1
ELSE		
Select an externally-generated receive clock. Note that in this case the AHCLKR signal path and the CLKRDIV divider are NOT used.	MCASP_ACLKRCTL[5] CLKRM	0b0
Receiver samples on rising/falling edge. Select Rx sampling on the rising edge if transmitter shifts out on falling edge, and vice versa.	MCASP_ACLKRCTL[7] CLKRP	0x-
Setup an input directon for the ACLKR pin	MCASP_PDIR[29] ACLKR	0b0
ENDIF		
Configure the transmit clock failure detect logic.	See Section 11.5.1.4.15.6.1, *Clock Failure Check Startup*.	

11.5.1.5.1.2.2.4 Subsequence—McASP Receiver Pins Functional Configuration

The procedure in Table 11-1357 configures the McASP pins for McASP functionality.

Table 11-1357. McASP Receiver Pins Functional Configuration

Step	Register/Bit Field/Programming Model	Value
Configure module different pins to have McASP functionality.	MCASP_PFUNC[31:0]	0x0
Configure the McASP pins direction: AFSR ACLKR Desired n-th McASP data pin AXRn is configured as an input for receiving.	MCASP_PDIR[31] AFSR; MCASP_PDIR[29] ACLKR; MCASP_PDIR[n] AXRn;	0x-(1) 0x- (2) 0x0

(1) See Table 11-1355.
(2) For more details on McASP clock configurations, refer to Table 11-1356.

11.5.1.5.1.2.3 Main Sequence – McASP Global Initialization for TDM -Transmission

The procedure in Table 11-1358 initializes a McASP serializer n transmitter(s) to operate in TDM-mode after a power-on reset (POR). This is used for I2S (2-slot TDM) and other TDM-based audio protocols transmission.

CAUTION

Before performing McASP global initialization, If external clock ACLKR is used, it must be running already for proper synchronization of the MCASP_GBLCTL register.

Table 11-1358. McASP Transmitters Global Initialization for TDM-Mode Operation

Step	Register/Bit Field/Programming Model	Value
1. Apply software reset to different McASP transmit components.	MCASP_GBLCTL[12:8]	0x00
2. Poll the bits to ensure the active reset value (0x00) is successfully latched into the register.	MCASP_GBLCTL[12:8]	=0x00
3. Configure the local power management.	PWRIDLESYSCONFIG[1:0] IDLE_MODE	0x1
4. Configure the transmit format unit.	See Section 11.5.1.5.1.2.3.1.	
5. Configure the transmit frame sync generator.	See Section 11.5.1.5.1.2.3.2.	

Copyright © 2025 Texas Instruments Incorporated

Table 11-1358. McASP Transmitters Global Initialization for TDM-Mode Operation (continued)

Step	Register/Bit Field/Programming Model	Value
6. Configure the transmit clock generator.	See Section 11.5.1.5.1.2.3.3.	
7. Program all bits - XTDMSk, where k=0 to 31, according to the time slot characteristics desired (positions of active versus inactive slots within a frame).	MCASP_TXTDM [k] XTDMSk, where k=0 to 31(4)	0x-
8. Configure the desired n-th serializer for transmit mode operation. (3)	MCASP_XRSRCTLn[1:0] SRMOD;	0x1
9. Setup all active transmitters to operate in TDM mode.	MCASP_TXDITCTL[0] DITEN	0x0(2)
10. Configure the McASP pins functionality.	See Section 11.5.1.5.1.2.3.4.	
11. Optional: Configure a McASP Tx channel for loopback operation (TDM mode only) in MCASP_LBCTL [31:0].	See Section 11.5.1.4.14.1, *Loopback Mode Configurations*.	0x-
12. Release from reset state the divider that outputs the AHCLKR clock. See (1)	MCASP_GBLCTL[9] XHCLKRST	0x1
13. Poll the bit to ensure that it is successfully latched in the register.	MCASP_GBLCTL[9] XHCLKRST	=0x1
14. Release from reset state the divider that outputs the ACLKR clock. See (1)	MCASP_GBLCTL[8] XCLKRST	0x1
15. Poll the bit to ensure that it is successfully latched in the register.	MCASP_GBLCTL[8] XCLKRST	=0x1

(1) During reset state the local McASP internal clock dividers maintain a 1:1 ratio at their outputs. The values stored in the MCASP_AHCLKX and MCASP_ACLKX registers are ignored; hence, the transmission clock does not stop during the reset state of the dividers.
(2) All active transmit channels operate either in TDM mode or in DIT mode depending on DITEN value. There is no option to choose Tx Mode between DIT and TDM separately per serializer transmitter.
(3) For an unused serializer n, write MCASP_XRSRCTLn [1:0] SRMOD=0x0 to disable it.
(4) Appropriately program in bitfield MCASP_XRSRCTLn [3:2] DISMOD, the desired level (high-impedance state, 0, or 1) at AXRn output, during time of inactive slots. Note, that this setting does NOT apply when all slots are programmed to be active within a frame (in particular DIT-mode).

11.5.1.5.1.2.3.1 Subsequence – Transmit Format Unit Configuration in TDM Mode

The procedure in Table 11-1359 configures the transmit frame format unit of the McASP module for TDM slots transmission.

Table 11-1359. Transmit Format Unit Configuration for TDM-Transmission

Step	Register/Bit Field/Programming Model	Value
Configure the desired TDM-slot size	MCASP_TXFMT[7:4] XSSZ	0x-(1)
Set data mask out value (0x0000 0000 - 0xFFFF FFFF).	MCASP_TXMASK[31:0] XMASK	0x-(2)
Select a padding value for masked-out bits.	MCASP_TXFMT[14:13] XPAD	0x-
Specify position (0x0-0x1F) of the bit in corresponding register MCASP_TXBUFn which value to be used as a pad value in case MCASP_TXFMT[14:13] XPAD=0x2.	MCASP_TXFMT[12:8] XPBIT	0x-
Rotate data right by a multiple of 4- bit positions.	MCASP_TXFMT[2:0] XROT	0x- (3)
transmitted stream bit order (LSB- or MSB-first). Must be set to 0x1 for an I2S stream transmission (MSB-first).	MCASP_TXFMT[15] XRVRS	0x- (3)
Specify a delay between frame sync and first bit of data in number of bits. Must be set to 0x1 for an I2S stream transmission.	MCASP_TXFMT[17:16] XDATDLY	0x-
Select to write data to active serializers transmit buffers using peripheral (CFG) or DATA port	MCASP_TXFMT[3] XBUSEL	0x-

(1) Refer to Section 11.5.1.4.4.1, *Transmit Format Unit* , regarding options for transmitted TDM-slot sizes.

Copyright © 2025 Texas Instruments Incorporated

(2) For more details on Tx masking value, refer to Section 11.5.1.4.4.1.1, *TDM - Mode Transmission Data Alignment Settings*
(3) For more details on rotation and transmitd TDM stream bit order, refer to Section 11.5.1.4.4.1.1, *TDM - Mode Transmission Data Alignment Settings* and Table 11-1339, *McASP TFU TDM Mode Settings*.

11.5.1.5.1.2.3.2 Subsequence – Transmit Frame Synchronization Generator Configuration in TDM Mode

The procedure in Table 11-1360 configures the transmit frame synchronization generator of the McASP module.

Table 11-1360. Transmit Frame-Synchronization Generator Configuration for TDM-Transmission

Step	Register/Bit Field/Programming Model	Value
Select number of TDM slots per frame (2 - 32). Must be set to 0x2, in case of an I2S-transmission. For more details on frame-sync generator, refer to Section 11.5.1.4.2.3.	MCASP_TXFMCTL[15:7] XMOD	0x-
Choose the transmit frame sync width -single bit/single word. For more details on frame-sync generator, refer to Section 11.5.1.4.2.3.	MCASP_TXFMCTL[4] FXWID	0x-
Select start of transmit frame sync polarity - rising / falling edge. For more details on frame-sync generator, refer to Section 11.5.1.4.2.3.	MCASP_TXFMCTL[0] FSXP	0x-
IF transmit frame sync - FS is internally generated	Software test condition	
Select internally- generated transmit frame sync. For more details on frame-sync generator, refer to Section 11.5.1.4.2.3.	MCASP_TXFMCTL[1] FSXM	0b1
If McASP transmitter is required to output internally generated frame, AFSX pin must be set as an output in step 10 of the sequence documented in the Table 11-1358. This must NOT be done in current step because the frame control register - MCASP_TXFMCTL must be appropriately configured prior to AFSX pin outputting a frame sync to an external device.	MCASP_PDIR[28] AFSX	0b1
ELSE		
Select externally- generated transmit frame sync. For more details on frame-sync generator, refer to Section 11.5.1.4.2.3.	MCASP_TXFMCTL[1] FSXM	0b0
Setup the AFSX pin as input	MCASP_PDIR[28] AFSX	0b0

11.5.1.5.1.2.3.3 Subsequence – Transmit Clock Generator Configuration for TDM Cases

The procedure in Table 11-1361 configures the transmit clock generator of the McASP module.

Table 11-1361. Transmit Clock Generator Configuration for TDM Cases

Step	Register/Bit Field/Programming Model	Value
IF transmit clock - XCLK is internally generated	Software test condition	
IF high-speed transmit clock - AHCLKX is internally generated based on AUXCLK	Software test condition	
Select an internally-generated high-frequency clock.	MCASP_AHCLKXCTL[15] HCLKXM	0b1
Select the high-frequency clock source polarity: non-inverted or inverted.	MCASP_AHCLKXCTL[14] HCLKXP	0x-
Set the divisor for the internally generated high-frequency clock – AHCLKX in range (1 - 4096).	MCASP_AHCLKXCTL[11:0] HCLKXDIV	0x-

Copyright © 2025 Texas Instruments Incorporated

Table 11-1361. Transmit Clock Generator Configuration for TDM Cases (continued)

Step	Register/Bit Field/Programming Model	Value
Optional: If McASP transmitter is required to output internally generated high-frequency clock, AHCLKX pin must be set as an output in step 10 of the sequence documented in the Table 11-1358. This must NOT be done in current step because the clock control register - MCASP_AHCLKXCTL must be appropriately configured prior to AHCLKX pin outputting a high-speed clock to an external device.	MCASP_PDIR[27] AHCLKX	0b1
ELSE		
Select an externally-generated high frequency clock (HCLKXDIV divider can not be used).	MCASP_AHCLKXCTL[15] HCLKXM	0b0
Select the high-speed transmit clock source polarity: non-inverted or inverted.	MCASP_AHCLKXCTL[14] HCLKXP	0x-
Setup an input directon for the AHCLKX pin	MCASP_PDIR[27] AHCLKX	0b0
ENDIF		
Select an internally-generated transmit clock.	MCASP_ACLKXCTL[5] CLKXM	0b1
Transmitter samples on rising/falling edge. Select Tx shifting out data on the rising edge if receiver samples on falling edge, and vice versa.	MCASP_ACLKXCTL[7] CLKXP	0x-
Set the divisor for the internally generated transmit clock– ACLKX in range (1 - 32).	MCASP_ACLKXCTL[4:0] CLKXDIV	0x-
Optional: If McASP transmitter is required to output internally generated clock, ACLKX pin) must be set as an output in step 10 of the sequence documented in the Table 11-1358. This must NOT be done in current step because the clock control register - MCASP_ACLKXCTL must be appropriately configured prior to ACLKX pin outputting a transmit clock to an external device.	MCASP_PDIR[26] ACLKX	0b1
ELSE		
Select an externally-generated transmit clock. Note that in this case the AHCLKX signal path and the CLKXDIV divider are NOT used.	MCASP_ACLKXCTL[5] CLKXM	0b0
Transmitter samples on rising/falling edge. Select Tx shifting out data on the rising edge if receiver samples on falling edge, and vice versa.	MCASP_ACLKXCTL[7] CLKXP	0x-
Setup an input directon for the ACLKX pin	MCASP_PDIR[26] ACLKX	0b0
ENDIF		
Configure the transmit clock failure detect logic.	See Section 11.5.1.4.15.6.1, *Clock Failure Check Startup*.	

11.5.1.5.1.2.3.4 Subsequence—McASP Transmit Pins Functional Configuration

The procedure in Table 11-1362 configures the McASP pins for McASP functionality.

Table 11-1362. McASP Transmit Pins Functional Configuration

Step	Register/Bit Field/Programming Model	Value
Configure module different pins to have McASP functionality.	MCASP_PFUNC[31:0]	0x0

Copyright © 2025 Texas Instruments Incorporated

Table 11-1362. McASP Transmit Pins Functional Configuration (continued)

Step	Register/Bit Field/Programming Model	Value
Configure the McASP pins direction: AFSX AHCLKX ACLKX Desired n-th McASP data pin AXRn is configured as an ouput for transmission.	MCASP_PDIR[28] AFSR; MCASP_PDIR[27] AHCLKR; MCASP_PDIR[26] ACLKR; MCASP_PDIR[n] AXRn	0x-(1) 0x-(2) 0x- (2) 0x1

(1) See Table 11-1360.

11.5.1.5.2 Operational Modes Configuration

11.5.1.5.2.1 McASP Transmission Modes

11.5.1.5.2.1.1 Main Sequence – McASP DIT- /TDM- Polling Transmission Method

Figure 11-352 shows the McASP DIT-/TDM- polling method.

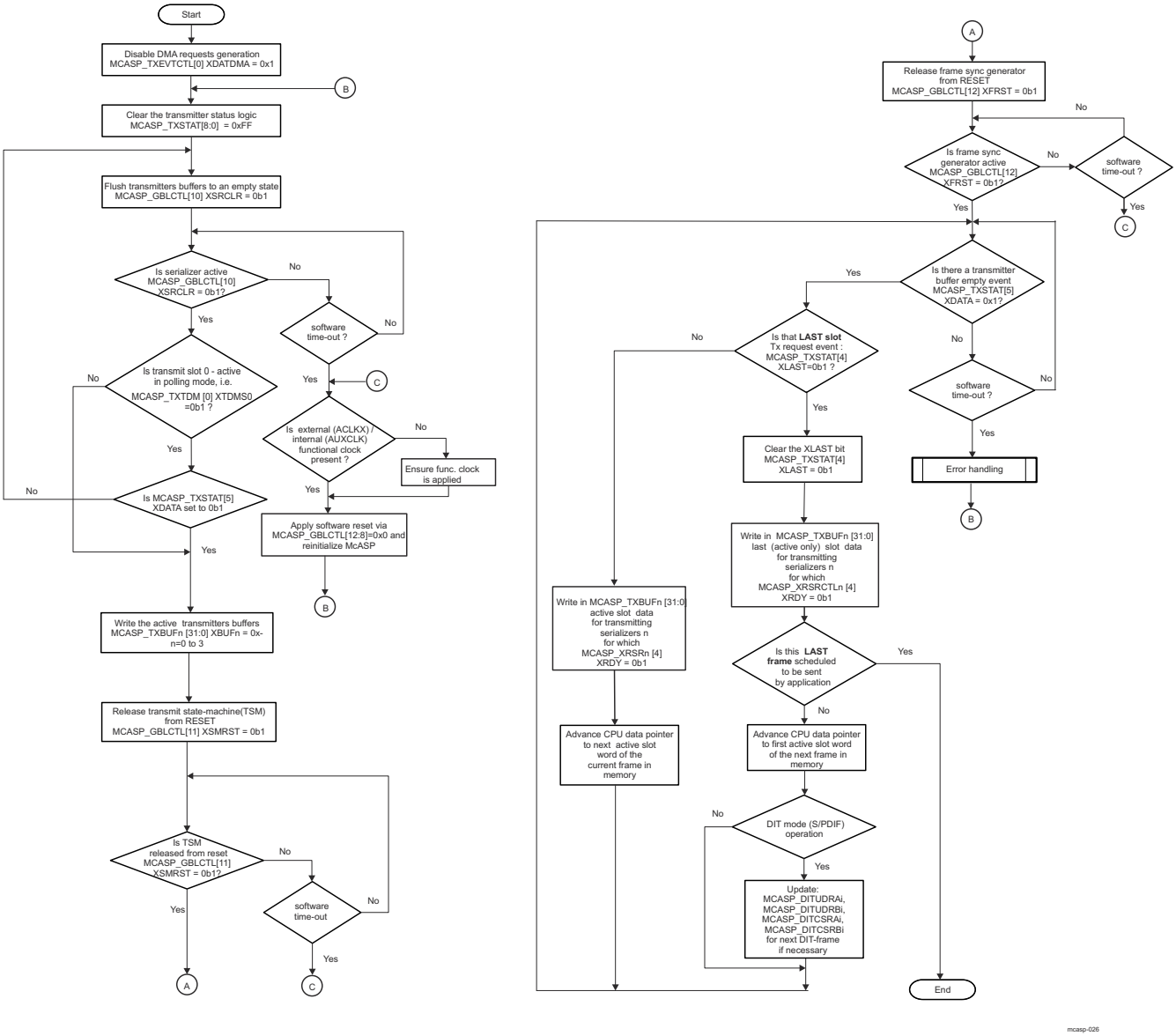

Figure 11-352. McASP DIT- /TDM- Transmission Polling Method

Copyright © 2025 Texas Instruments Incorporated

summarizes the register call for the transmission DIT-/TDM- polling mode.

Table 11-1363 summarizes the subprocess call for the DIT-/TDM- transmission polling mode.

Table 11-1363. Subprocess Call Summary for Main Sequence – McASP DIT-/TDM- Transmission Polling Method

Subprocess Name	Cross-Reference
Error handling	Figure 11-358

11.5.1.5.2.1.2 Main Sequence – McASP DIT- /TDM - Interrupt Transmission Method

Figure 11-353 shows the initial setup for interrupt-based transmission.

Copyright © 2025 Texas Instruments Incorporated

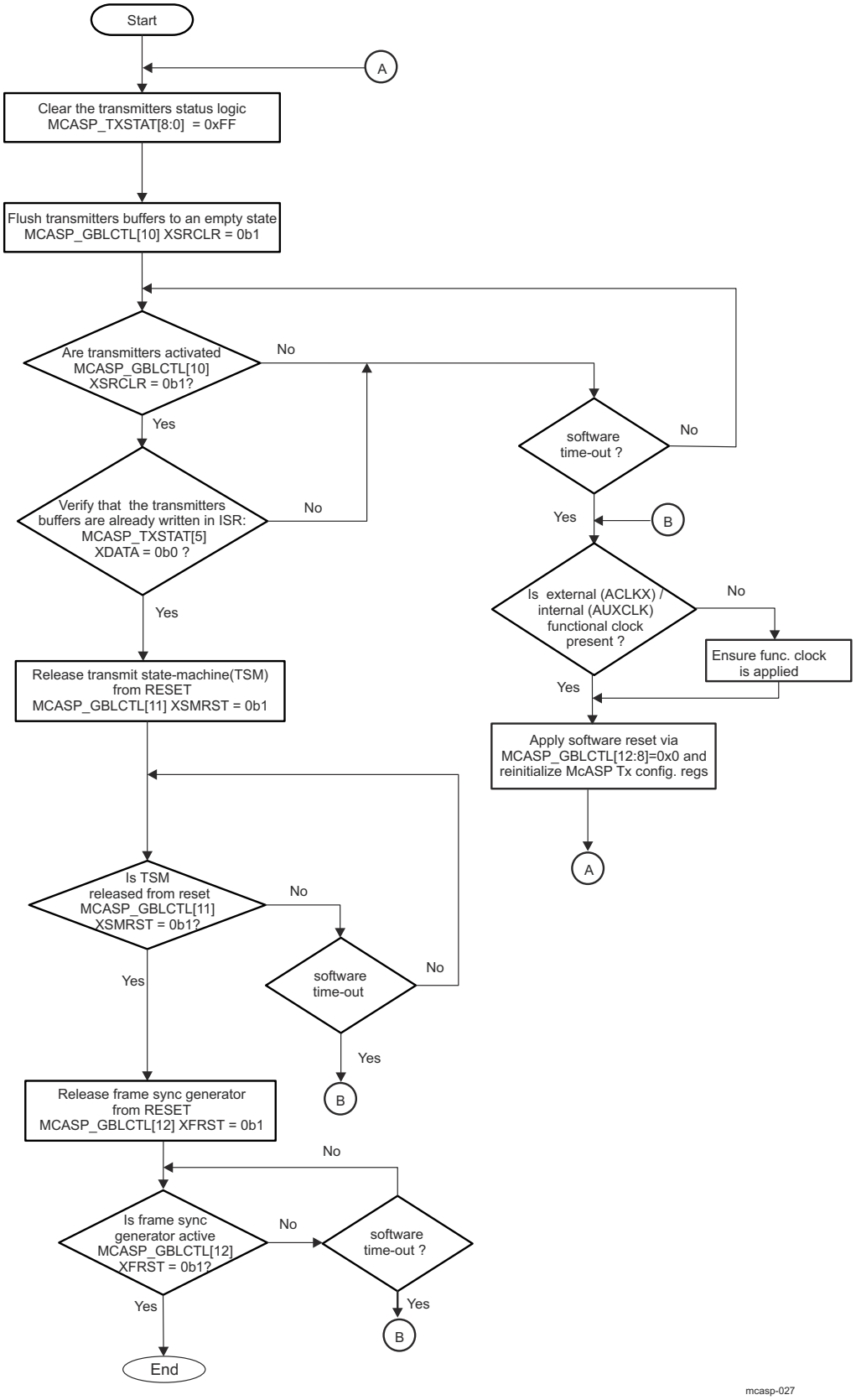

Figure 11-353. Subsequence – DIT-/TDM- Transmission Startup Procedure

Copyright © 2025 Texas Instruments Incorporated

Table 11-1364 shows the configuration of the McASP using an interrupt method for DIT-/TDM- transmission.

Table 11-1364. McASP DIT-/TDM- Interrupt Transmission Model

Step	Register/Bit Field/Programming Model	Value
Disable Tx DMA requests generation.	MCASP_XEVTCTL[0] XDATDMA	0x1
Enable the data ready event transmit interrupt.	MCASP_EVTCTLX[5] XDATA	0x1
Optional: Enable the transmit error event interrupts.	MCASP_EVTCTLX[2] XCKFAIL MCASP_EVTCTLX[1] XSYNCERR MCASP_EVTCTLX[0] XUNDRN	0x1 0x1 0x1
Optional: Enable the start of frame interrupt. Optional: Enable the last slot data interrupt (useful for DIT user data/ channel status next S/PDIF frame info update.)	MCASP_EVTCTLX [7] XSTAFRM MCASP_EVTCTLX[4] XLAST	0x1 0x1
IFwrite transfer is through the McASP DATA port (MCASP_TXFMT[3] XBUSEL is set to 0b0).	Software test condition (setting is done in step4 of the *McASP Transmitters Global Initialization* - see Table 11-1347)	
Enable the DATA port error based interrupt.	MCASP_EVTCTLX[3] XDMAERR	0x1
ELSE		
Disable the DATA port error based interrupt.	MCASP_EVTCTLX[3] XDMAERR	0x0
ENDIF		
DIT/TDM - Transmission Startup Procedure	See Figure 11-353.	

11.5.1.5.2.1.3 Main Sequence –McASP DIT- /TDM - Mode DMA Transmission Method

Table 11-1365 shows the configuration of the McASP using the DMA method for transmission. Possible interrupt error event servicing is also considered. shows the initial setup for DMA - based transmission.

Note

Because of the DATA port burst access capability with the DMA method, it is strongly recommended that DMA transfers are initiated through the McASP DATA port.

Table 11-1365. McASP DMA Transmission Model with Interrupt Events Servicing

Step	Register/Bit Field/Programming Model	Value
Recommended: Select DATA port to access the transmit buffers.	MCASP_TXFMT[3] XBUSEL	0x0
Enable the Tx DMA requests generation.	MCASP_XEVTCTL[0] XDATDMA	0x0
Enable the Tx DMA error event, because of McASP DATA port usage.	MCASP_EVTCTLX[3] XDMAERR	0x1
Optional: Enable the transmit error event interrupts.	MCASP_EVTCTLX[2] XCKFAIL MCASP_EVTCTLX[1] XSYNCERR MCASP_EVTCTLX[0] XUNDRN	0x1 0x1 0x1
Optional: Enable the start of frame interrupt. Optional: Enable the last slot data interrupt.	MCASP_EVTCTLX [7] XSTAFRM MCASP_EVTCTLX[4] XLAST	0x1 0x1
Disable the data ready event transmit interrupt, as DMA is used to service this request.	MCASP_EVTCTLX[5] XDATA	0x0
DMA startup transmission procedure. This procedure is identical than the one shown in Figure 11-353. The only difference is that DMA automatically services all the AXEVT events raised by the McASP, and no CPU data processing intervention is required. The CPU is involved only in error handling shown in Figure 11-356.	See Figure 11-353.	

Copyright © 2025 Texas Instruments Incorporated

11.5.1.5.2.2 McASP Reception Modes

11.5.1.5.2.2.1 Main Sequence – McASP Polling Reception Method

Figure 11-354 shows the McASP polling reception method.

Note

The McASP polling reception model considers thedevice CPUs as the accessor of audio data from the McASP receive buffers.

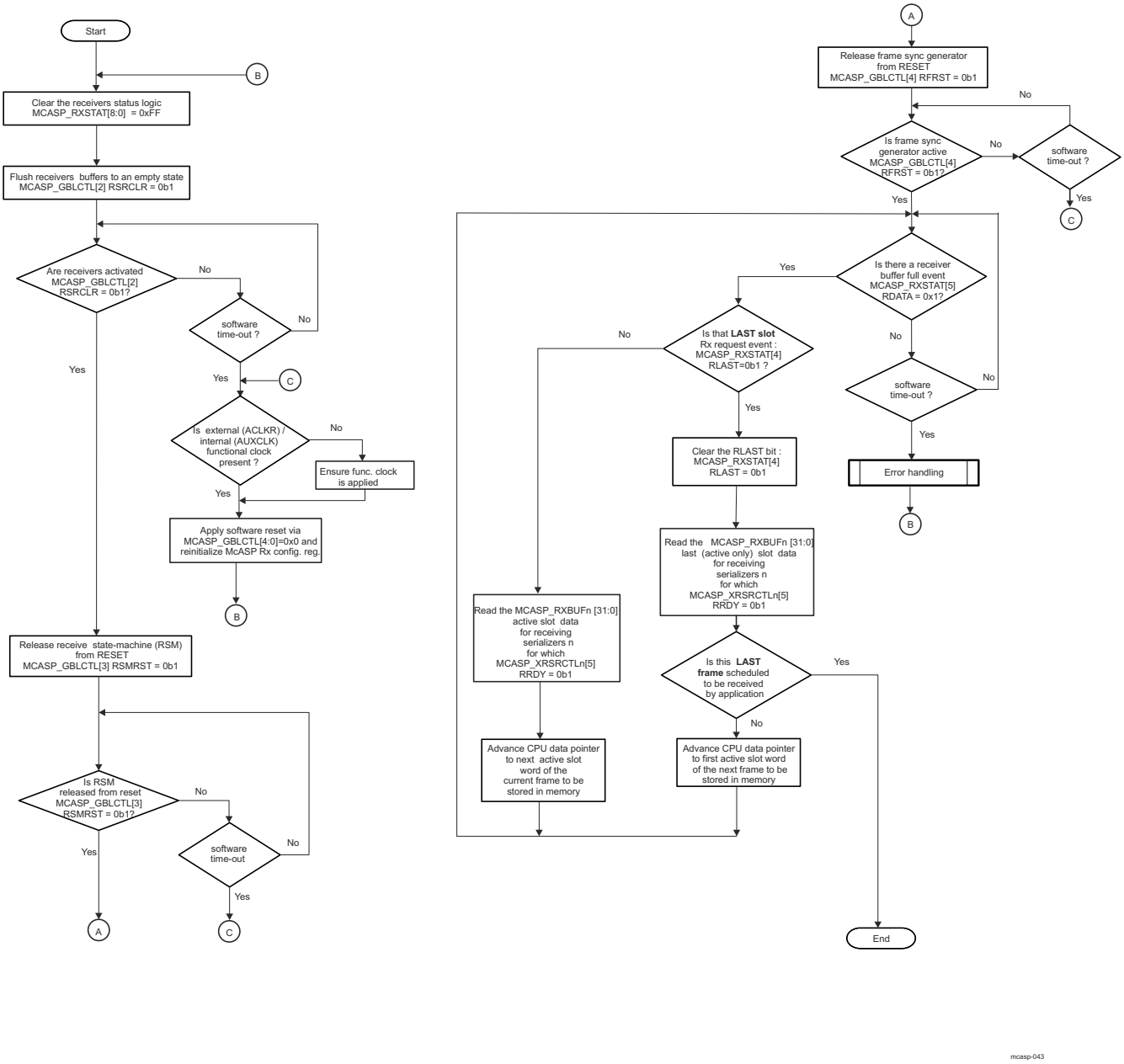

Figure 11-354. McASP Polling Reception Method

Table 11-1366 summarizes the subprocess call for the polling mode.

Copyright © 2025 Texas Instruments Incorporated

Table 11-1366. Subprocess Call Summary for Main Sequence – McASP Reception Polling Method

Subprocess Name	Cross-Reference
Error handling	Figure 11-359

11.5.1.5.2.2.2 Main Sequence – McASP TDM - Interrupt Reception Method

Figure 11-355 shows the initial setup for interrupt-based reception.

Copyright © 2025 Texas Instruments Incorporated

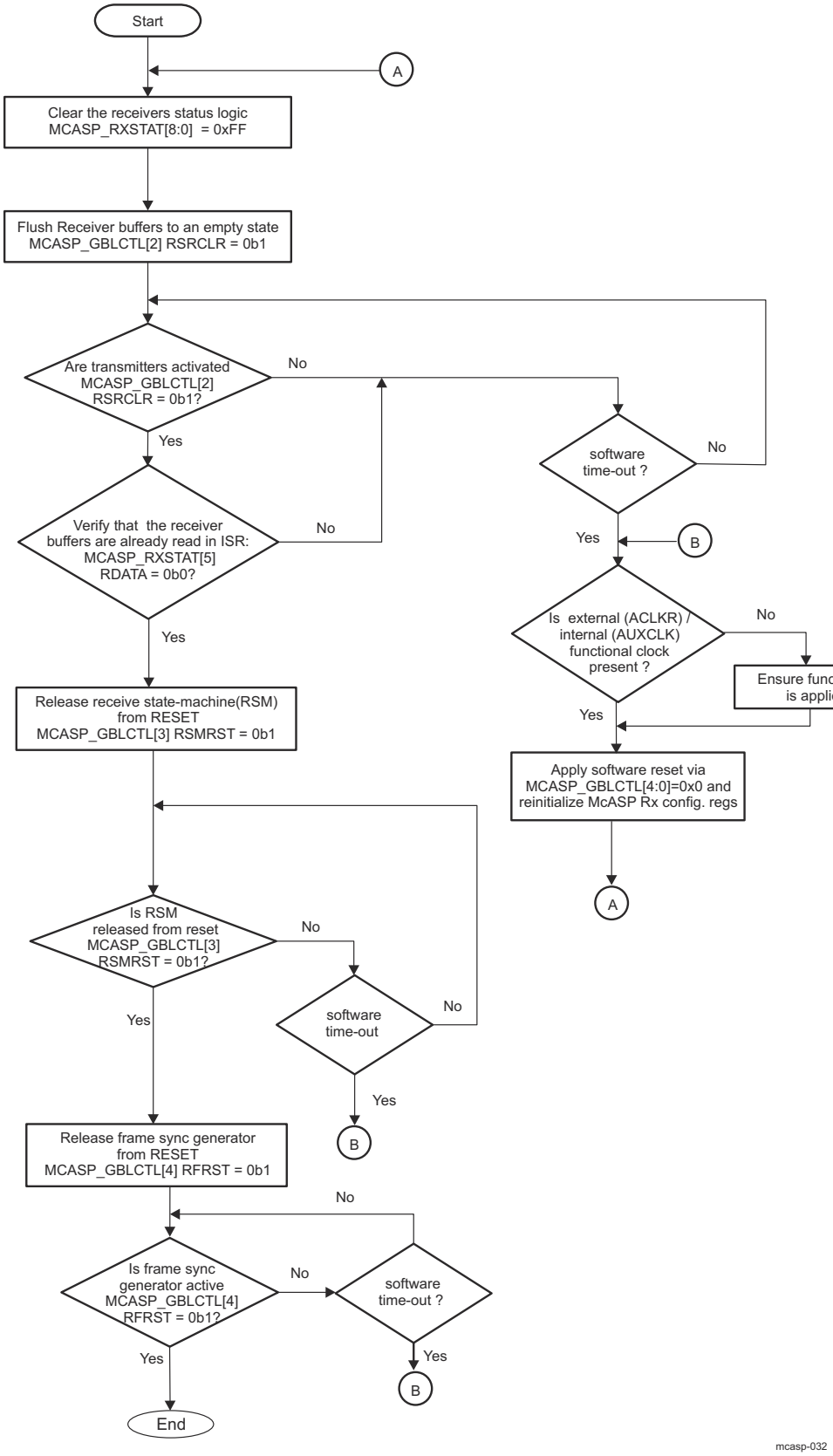

Figure 11-355. Subsequence – TDM - Reception Startup Procedure

Copyright © 2025 Texas Instruments Incorporated

Table 11-1367 shows the configuration of the McASP using an interrupt method for TDM- reception.

Table 11-1367. McASP TDM- Interrupt Reception Model

Step	Register/Bit Field/Programming Model	Value
Disable Rx DMA requests generation.	MCASP_REVTCTL[0] RDATDMA	0x1
Enable the data ready event receive interrupt.	MCASP_EVTCTLR[5] RDATA	0x1
Optional: Enable the receive error event interrupts.	MCASP_EVTCTLR[2] RCKFAIL MCASP_EVTCTLR[1] RSYNCERR MCASP_EVTCTLR[0] ROVRN	0x1 0x1 0x1
Optional: Enable the start of frame interrupt. Optional: Enable the last slot data interrupt	MCASP_EVTCTLR [7] RSTAFRM MCASP_EVTCTLR[4] RLAST	0x1 0x1
IF read transfer is through the McASP DATA port (MCASP_RXFMT[3] RBUSEL is set to 0b0).	Software test condition (setting is done in step4 of the *McASP Receivers Global Initialization for TDM-Mode Operation* - see Table 11-1353)	
Enable the DATA port error based interrupt.	MCASP_EVTCTLR[3] RDMAERR	0x1
ELSE		
Disable the DATA port error based interrupt.	MCASP_EVTCTLR[3] RDMAERR	0x0
ENDIF		
TDM - Transmission Startup Procedure	See Figure 11-355.	

11.5.1.5.2.2.3 Main Sequence – McASP TDM - Mode DMA Reception Method

Table 11-1368 shows the configuration of the McASP using the DMA method for reception. Possible interrupt error event servicing is also considered. shows the initial setup for DMA - based transmission.

Note

Because of the DATA port burst access capability with the DMA method, it is strongly recommended that DMA transfers are initiated through the McASP DATA port.

Table 11-1368. McASP DMA Reception Model with Interrupt Events Servicing

Step	Register/Bit Field/Programming Model	Value
Recommended: Select DATA port to access the transmit buffers.	MCASP_RXFMT[3] RBUSEL	0x0
Enable the Rx DMA requests generation.	MCASP_REVTCTL[0] RDATDMA	0x0
Enable the Rx DMA error event, because of McASP DATA port usage.	MCASP_EVTCTLR[3] RDMAERR	0x1
Optional: Enable the receive error event interrupts.	MCASP_EVTCTLR2] RCKFAIL MCASP_EVTCTLR[1] RSYNCERR MCASP_EVTCTLR[0] ROVRN	0x1 0x1 0x1
Optional: Enable the start of frame interrupt. Optional: Enable the last slot data interrupt.	MCASP_EVTCTLR [7] RSTAFRM MCASP_EVTCTLR[4] RLAST	0x1 0x1
Disable the data ready event receive interrupt, as DMA is used to service this request.	MCASP_EVTCTLR[5] RDATA	0x0
DMA startup reception procedure. This procedure is identical than the one shown in Figure 11-355. The only difference is that DMA automatically services all the AREVT events raised by the McASP, and no CPU data processing intervention is required. The CPU is involved only in error handling shown in Figure 11-357.	See Figure 11-355.	

11.5.1.5.2.3 McASP Event Servicing

11.5.1.5.2.3.1 McASP DIT-/TDM- Transmit Interrupt Events Servicing

Figure 11-356 shows the flow of DIT-/TDM- mode transmit interrupt events servicing for the McASP module.

Copyright © 2025 Texas Instruments Incorporated

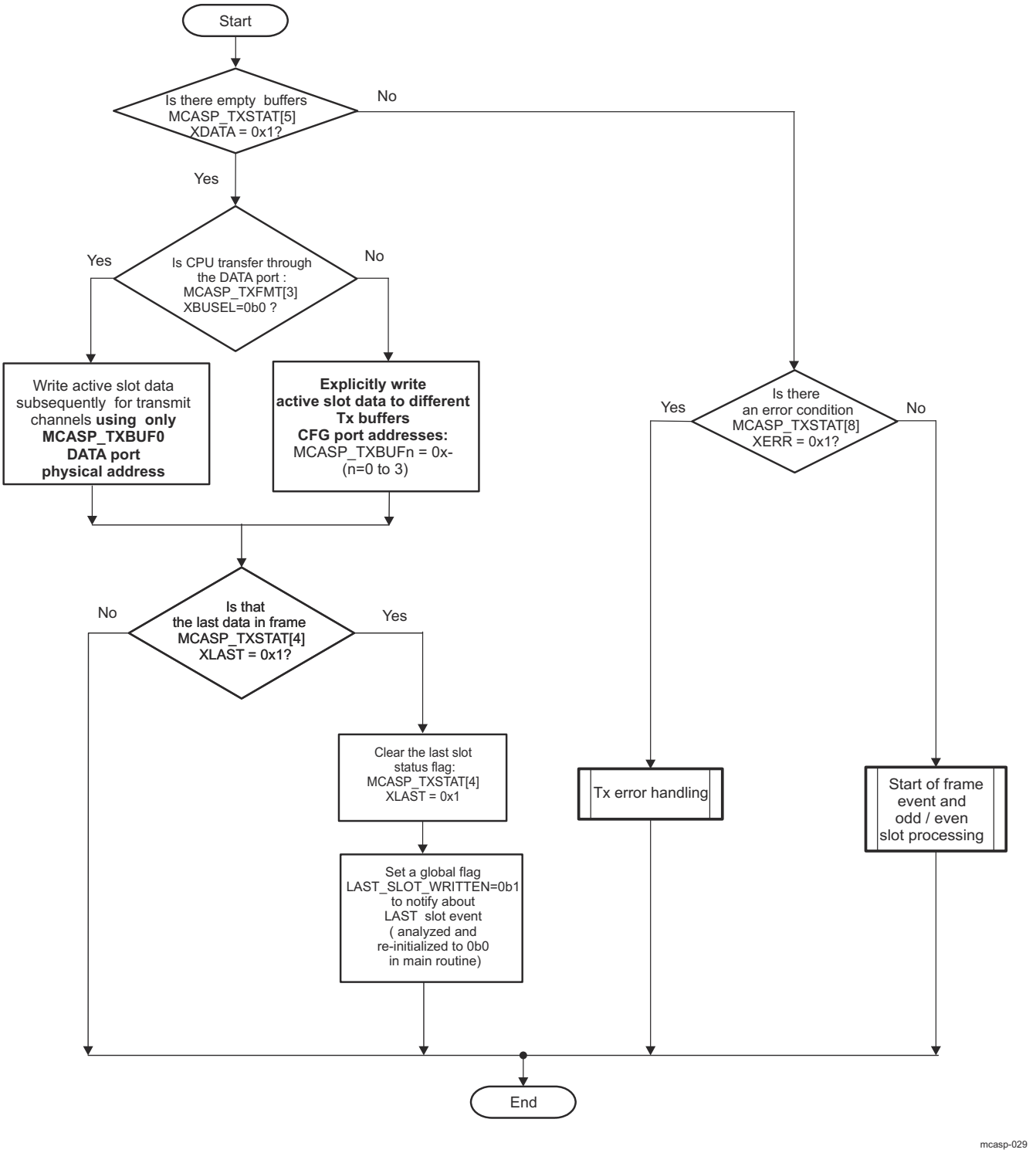

Figure 11-356. McASP Transmit Interrupt Events Servicing

11.5.1.5.2.3.2 McASP TDM- Receive Interrupt Events Servicing

Figure 11-357 shows the flow of DIT-/TDM- mode transmit interrupt events servicing for the McASP module.

Copyright © 2025 Texas Instruments Incorporated

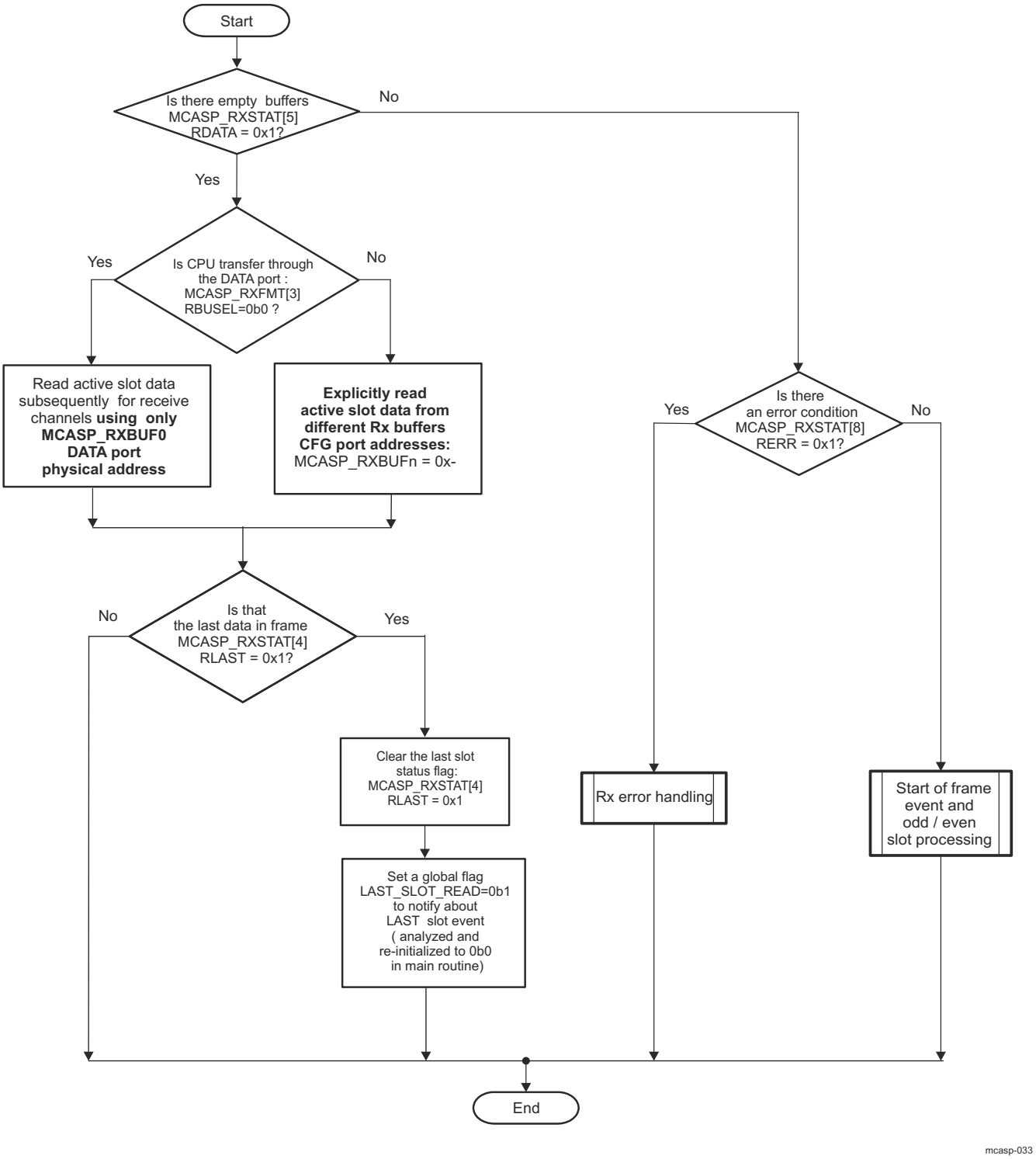

Figure 11-357. McASP Receive Interrupt Events Servicing

Table 11-1369 lists the subprocess call summary for receive interrupt events servicing.

Table 11-1369. Subprocess Call Summary for Receive Interrupt Events Servicing

Subprocess Name	Cross-Reference
McASP receive error handling	Figure 11-359

Copyright © 2025 Texas Instruments Incorporated

Table 11-1369. Subprocess Call Summary for Receive Interrupt Events Servicing (continued)

Subprocess Name	Cross-Reference
Start of frame handling	Section 11.5.1.4.12.2

11.5.1.5.2.3.3 Subsequence – McASP DIT-/TDM -Modes Transmit Error Handling

Figure 11-358 shows the transmit error handling schema for the McASP, which can be implemented as part of the Tx interrupt service routine or as part of the Tx polling sequence.

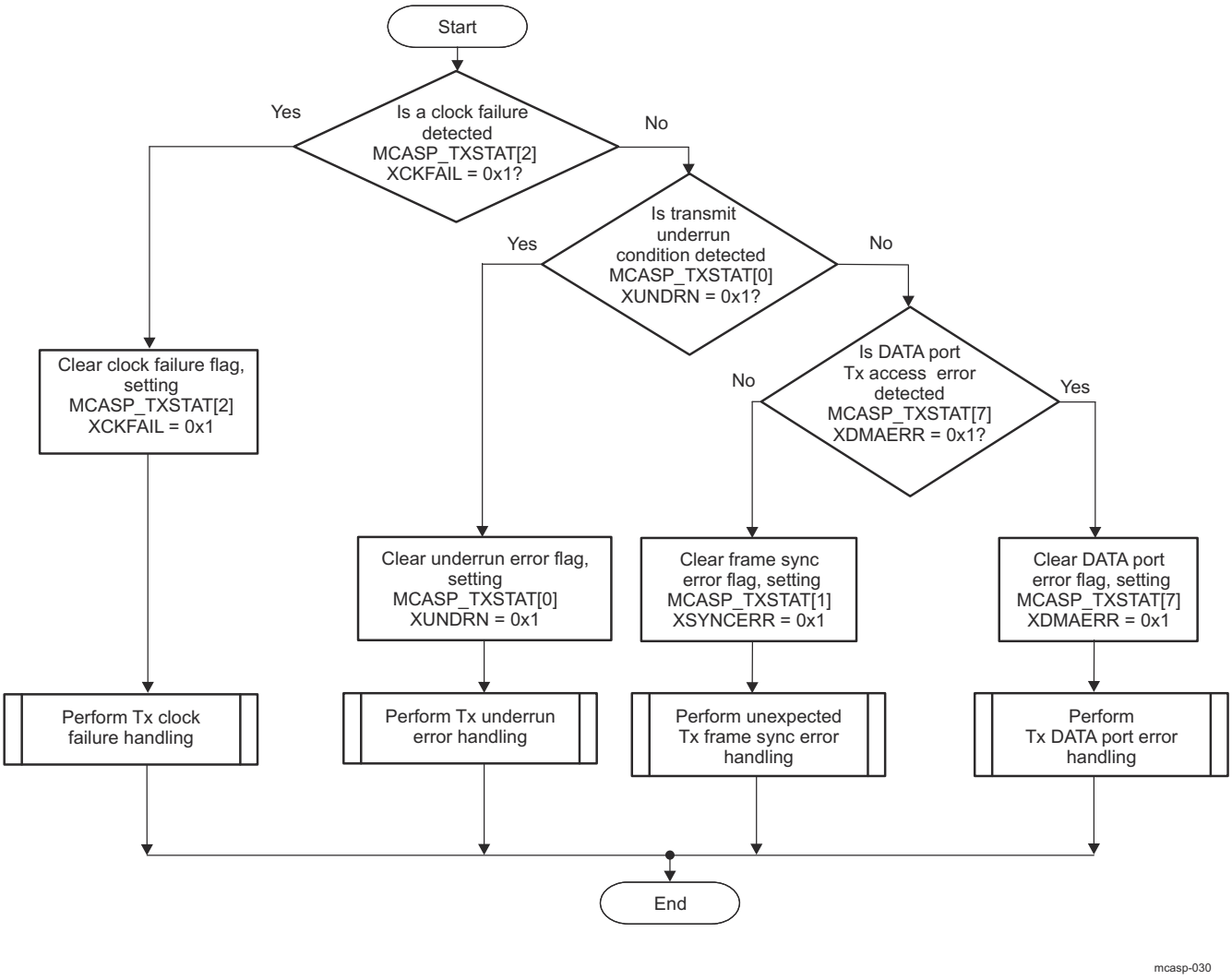

Figure 11-358. McASP Transmit Error Handling

Note

- For more information about transmit clock failure handling, see Section 11.5.1.4.15.6.2, *Transmit Clock Failure Check and Recovery*.
- For more information about transmit buffer underrun handling, see Section 11.5.1.4.15.1, *Buffer Underrun Error -Transmitter*.
- For more information about DATA port Tx error handling, see Section 11.5.1.4.15.3, *DATA Port Error - Transmitter*.
- For more information about unexpected Tx frame sync error handling, see Section 11.5.1.4.15.5, *Unexpected Frame Sync Error*.

Copyright © 2025 Texas Instruments Incorporated

11.5.1.5.2.3.4 Subsequence – McASP Receive Error Handling

Figure 11-359 shows the receive error handling schema for the McASP, which can ONLY be implemented as part of the Rx polling sequence.

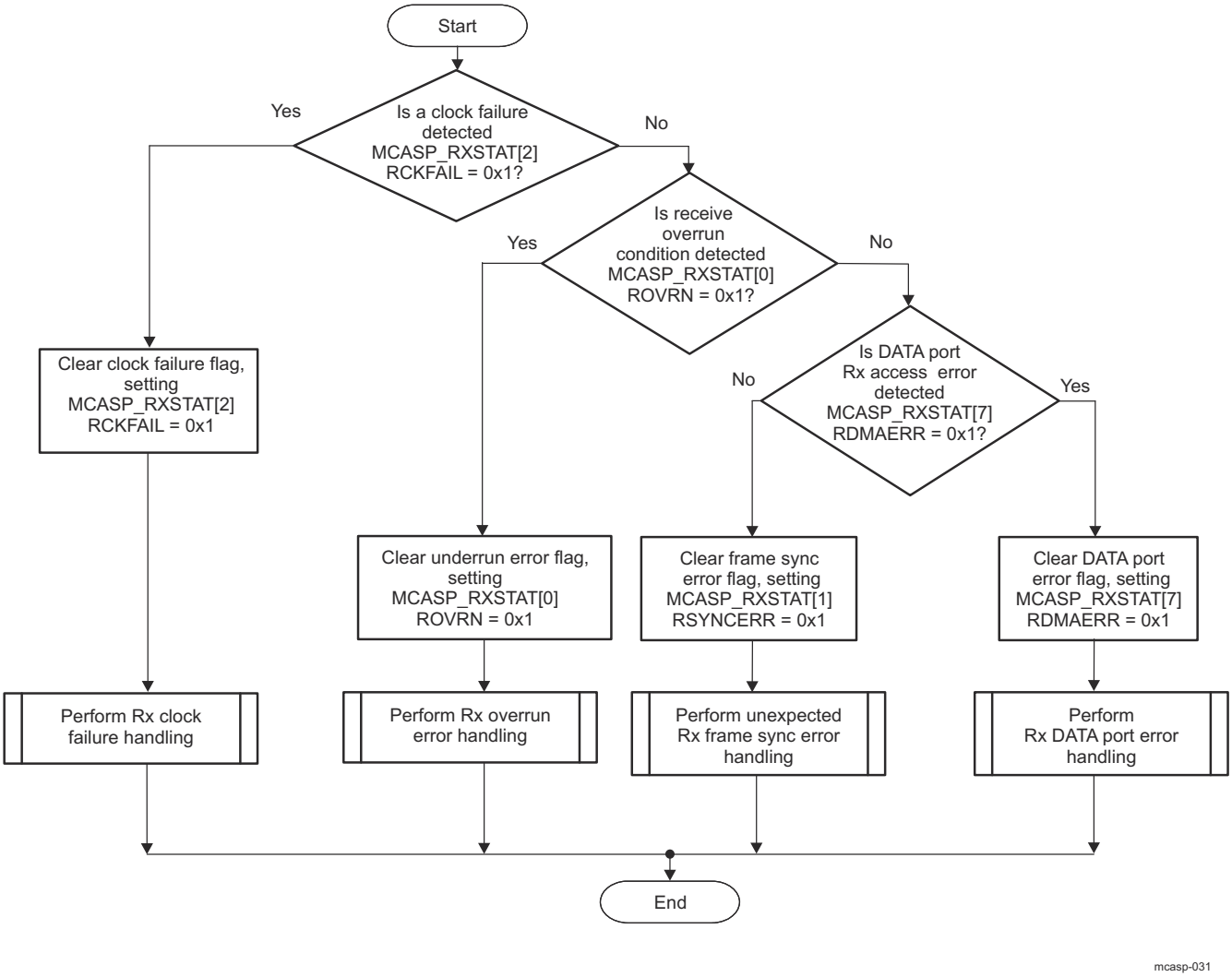

Figure 11-359. McASP Receive Error Handling

Note

- For more information about receive clock failure handling, see Section 11.5.1.4.15.6.3, *Receive Clock Failure Check and Recovery*.
- For more information about receive buffer overrun handling, see Section 11.5.1.4.15.2, *Buffer Overrun Error - Receiver*.
- For more information about DATA port Rx error handling, see Section 11.5.1.4.15.4, *DATA Port Error - Receiver*.
- For more information about unexpected Rx frame sync error handling, see Section 11.5.1.4.15.5, *Unexpected Frame Sync Error*.

Copyright © 2025 Texas Instruments Incorporated

11.5.1.6 McASP Register Manual

11.5.1.6.1 McASP Instance Summary

summarizes the McASP instances.

Table 11-1370. McASP Instance Summary

Module Name	Base Address L3_MAIN Interconnect	Base Address L4_PER2 Interconnect	Size
MCASP1_CFG	-	0x051E 0000	4 KiB
MCASP2_CFG	-	0x0520 0000	4 KiB
MCASP3_CFG	-	0x0522 0000	4 KiB

11.5.1.6.2 McASP Registers

11.5.1.6.2.1 MCASP_CFG Register Summary

Table 11-1371 summarize the MCASP_CFG register mapping.

Table 11-1371. MCASP_CFG Register Summary

Register Name	Type	Register Width (Bits)	MCASP1_CFG L4_PER2 Physical Address	MCASP2_CFG L4_PER2 Physical Address	MCASP3_CFG L4_PER2 Physical Address
MCASP_PID	R	32	0x051E 0000	0x0520 0000	0x0522 0000
PWRIDLESYSCONFIG	RW	32	0x051E 0004	0x0520 0004	0x0522 0004
MCASP_PFUNC	RW	32	0x051E 0010	0x0520 0010	0x0522 0010
MCASP_PDIR	RW	32	0x051E 0014	0x0520 0014	0x0522 0014
MCASP_PDOUT	RW	32	0x051E 0018	0x0520 0018	0x0522 0018
MCASP_PDIN	R	32	0x051E 001C	0x0520 001C	0x0522 001C
MCASP_PDCLR	RW	32	0x051E 0020	0x0520 0020	0x0522 0020
RESERVED	RW	32	0x051E 0030	0x0520 0030	0x0522 0030
RESERVED	RW	32	0x051E 0034	0x0520 0034	0x0522 0034
RESERVED	RW	32	0x051E 0038	0x0520 0038	0x0522 0038
MCASP_GBLCTL	RW	32	0x051E 0044	0x0520 0044	0x0522 0044
MCASP_AMUTE	RW	32	0x051E 0048	0x0520 0048	0x0522 0048
MCASP_DLBCTL	RW	32	0x051E 004C	0x0520 004C	0x0522 004C
MCASP_DITCTL	RW	32	0x051E 0050	0x0520 0050	0x0522 0050
MCASP_RGBLCTLR	RW	32	0x051E 0060	0x0520 0060	0x0522 0060
MCASP_RMASK	RW	32	0x051E 0064	0x0520 0064	0x0522 0064
MCASP_RFMT	RW	32	0x051E 0068	0x0520 0068	0x0522 0068
MCASP_AFSRCTL	RW	32	0x051E 006C	0x0520 006C	0x0522 006C
MCASP_ACLKRCTL	RW	32	0x051E 0070	0x0520 0070	0x0522 0070
MCASP_AHCLKRCTL	RW	32	0x051E 0074	0x0520 0074	0x0522 0074
MCASP_RTDM	RW	32	0x051E 0078	0x0520 0078	0x0522 0078
MCASP_RINTCTL	RW	32	0x051E 007C	0x0520 007C	0x0522 007C
MCASP_RSTAT	RW	32	0x051E 0080	0x0520 0080	0x0522 0080
MCASP_RSLOT	R	32	0x051E 0084	0x0520 0084	0x0522 0084
MCASP_RCLKCHK	RW	32	0x051E 0088	0x0520 0088	0x0522 0088
MCASP_PIDCTL	RW	32	0x051E 008C	0x0520 008C	0x0522 008C
MCASP_XGBLCTL	RW	32	0x051E 00A0	0x0520 00A0	0x0522 00A0
MCASP_XMASK	RW	32	0x051E 00A4	0x0520 00A4	0x0522 00A4
MCASP_XFMT	RW	32	0x051E 00A8	0x0520 00A8	0x0522 00A8
MCASP_AFSXCTL	RW	32	0x051E 00AC	0x0520 00AC	0x0522 00AC
MCASP_ACLKXCTL	RW	32	0x051E 00B0	0x0520 00B0	0x0522 00B0
MCASP_AHCLKXCTL	RW	32	0x051E 00B4	0x0520 00B4	0x0522 00B4

Copyright © 2025 Texas Instruments Incorporated

Table 11-1371. MCASP_CFG Register Summary (continued)

Register Name	Type	Register Width (Bits)	MCASP1_CFG L4_PER2 Physical Address	MCASP2_CFG L4_PER2 Physical Address	MCASP3_CFG L4_PER2 Physical Address
MCASP_XTDM	RW	32	0x051E 00B8	0x0520 00B8	0x0522 00B8
MCASP_XINTCTL	RW	32	0x051E 00BC	0x0520 00BC	0x0522 00BC
MCASP_XSTAT	RW	32	0x051E 00C0	0x0520 00C0	0x0522 00C0
MCASP_XSLOT	R	32	0x051E 00C4	0x0520 00C4	0x0522 00C4
MCASP_XCLKCHK	RW	32	0x051E 00C8	0x0520 00C8	0x0522 00C8
MCASP_XEVTCTL	RW	32	0x051E 00CC	0x0520 00CC	0x0522 00CC
MCASP_DITCSRAi	RW	32	0x051E 0100 + (0x4*i)	0x0520 0100 + (0x4*i)	0x0522 0100 + (0x4*i)
MCASP_DITCSRBi	RW	32	0x051E 0118 + (0x4*i)	0x0520 0118 + (0x4*i)	0x0522 0118 + (0x4*i)
MCASP_DITUDRAi	RW	32	0x051E 0130 + (0x4*i)	0x0520 0130 + (0x4*i)	0x0522 0130 + (0x4*i)
MCASP_DITUDRBi	RW	32	0x051E 0148 + (0x4*i)	0x0520 0148 + (0x4*i)	0x0522 0148 + (0x4*i)
MCASP_SRCTLn	RW	32	0x051E 0180 + (0x4*n)	0x0520 0180 + (0x4*n)	0x0522 0180 + (0x4*n)
MCASP_XBUFn	RW	32	0x051E 0200 + (0x4*n)	0x0520 0200 + (0x4*n)	0x0522 0200 + (0x4*n)
MCASP_RBUFn	RW	32	0x051E 0280 + (0x4*n)	0x0520 0280 + (0x4*n)	0x0522 0280 + (0x4*n)
WFIFOCTL	RW	32	0x051E 1000	0x0520 1000	0x0522 1000
WFIFOSTS	RO	32	0x051E 1004	0x0520 1004	0x0522 1004
RFIFOCTL	RW	32	0x051E 1008	0x0520 1008	0x0522 1008
RFIFOSTS	RO	32	0x051E 100C	0x0520 100C	0x0522 100C

Note

The address locations listed in and , *MCASP_CFG Register Mapping Summary*, are relevant for accessing:

- All McASP configuration registers
- MCASP_TXBUFn registers
- MCASP_RXBUFn registers

through the McASP peripheral configuration (CFG) port.

The MCASP_TXFMT[3] XBUSEL bit must be set to 0b1, to allow CFG port write accesses to the McASP XRBUFn buffer. The MCASP_RXFMT[3] RBUSEL bit must be set to 0b1, to allow CFG port read accesses to the McASP XRBUFn buffer.

11.5.1.6.2.2 MCASP_CFG Register Description

The tables below describe the individual MCASP_CFG register bits.

Note

For all of the below described registers the indexes n and N are applying to serializers (not slots).

Register descriptions cover the superset McASP (16 serializers and all signals pinned out). For the particular McASP instantiation, please refer to Section 11.5.1.2, *McASP Environment*, and Section 11.5.1.3, *McASP Integration*.

Table 11-1372. MCASP_PID

Address Offset	0x0000 0000		
Physical Address	0x051E 0000 0x0520 0000 0x0522 0000	**Instance**	MCASP1_CFG_PER2_L4 MCASP2_CFG_PER2_L4 MCASP3_CFG_PER2_L4
Description	Peripheral identification register		
Type	R		

Copyright © 2025 Texas Instruments Incorporated

31	30	29	28	27	26	25	24	23	22	21	20	19	18	17	16	15	14	13	12	11	10	9	8	7	6	5	4	3	2	1	0
SCHEME		RESV		FUNCTION												RTL					REVMAJOR			CUSTOM			REVMINOR					

Bits	Field Name	Description	Type	Reset
31:30	SCHEME	Scheme. Distinguishes between old scheme and current.	R	0x1
29:28	RESV	Reserved.	R	0x0
27:16	FUNCTION	McASP. Indicates a software-compatible module family.	R	0x430
15:11	RTL	RTL version.	R	0x1
10:8	REVMAJOR	Major revision number.	R	0x0
7:6	CUSTOM	Non-custom. Indicates a special version for a given device.	R	0x0
5:0	REVMINOR	Minor revision number.	R	0x0

Table 11-1373. PWRIDLESYSCONFIG

Address Offset	0x0000 0004		
Physical Address	0x051E 0004 0x0520 0004 0x0522 0004	**Instance**	MCASP1_CFG_PER2_L4 MCASP2_CFG_PER2_L4 MCASP3_CFG_PER2_L4
Description	Power idle module configuration register.		
Type	RW		

31	30	29	28	27	26	25	24	23	22	21	20	19	18	17	16	15	14	13	12	11	10	9	8	7	6	5	4	3	2	1	0
RESERVED																														OTHER						IDLE_MODE	

Bits	Field Name	Description	Type	Reset
31:6	RESERVED	Reserved	R	0x0000000
5:2	OTHER	Reserved for future expansion	RW	0x0
1:0	IDLE_MODE	0x0: Force-idle mode 0x1: No-idle mode 0x2: Smart-idle mode - default state 0x3: Reserved	RW	0x2

Table 11-1374. MCASP_PFUNC

Address Offset	0x0000 0010		
Physical Address	0x051E 0010 0x0520 0010 0x0522 0010	**Instance**	MCASP1_CFG_PER2_L4 MCASP2_CFG_PER2_L4 MCASP3_CFG_PER2_L4
Description	Specifies the function of the pins as either a McASP pin or a GPIO pin. Some register bits might not be functional for all McASP instances, due to corresponding McASP pin not being pinned out on a particular device part number. Refer to device-specific DM for more information on the supported McASP features.		
Type	RW		

31	30	29	28	27	26	25	24	23	22	21	20	19	18	17	16	15	14	13	12	11	10	9	8	7	6	5	4	3	2	1	0
AFSR	RESERVED	ACLKR	AFSX	AHCLKX	ACLKX	RESERVED										AXR15	AXR14	AXR13	AXR12	AXR11	AXR10	AXR9	AXR8	AXR7	AXR6	AXR5	AXR4	AXR3	AXR2	AXR1	AXR0

Copyright © 2025 Texas Instruments Incorporated

Bits	Field Name	Description	Type	Reset
31	AFSR	Determines if AFSR pin functions as McASP or GPIO. 0x0: Pin functions as McASP pin 0x1: Pin functions as GIO pin	RW	0
30	RESERVED	Reserved	RW	0
29	ACLKR	Determines if ACLKR pin functions as McASP or GPIO. 0x0: Pin functions as McASP pin 0x1: Pin functions as GIO pin	RW	0
28	AFSX	Determines if AFSX pin functions as McASP or GPIO. 0x0: Pin functions as McASP pin 0x1: Pin functions as GIO pin	RW	0
27	AHCLKX	Determines if AHCLKX pin functions as McASP or GPIO. 0x0: Pin functions as McASP pin 0x1: Pin functions as GIO pin	RW	0
26	ACLKX	Determines if ACLKX pin functions as McASP or GPIO. 0x0: Pin functions as McASP pin 0x1: Pin functions as GIO pin	RW	0
25:16	RESERVED	Reserved	RW	0x000
15	AXR15	Determines if AXR15 pin functions as McASP or GPIO. 0x0: Pin functions as McASP pin 0x1: Pin functions as GIO pin	RW	0
14	AXR14	Determines if AXR14 pin functions as McASP or GPIO. 0x0: Pin functions as McASP pin 0x1: Pin functions as GIO pin	RW	0
13	AXR13	Determines if AXR13 pin functions as McASP or GPIO. 0x0: Pin functions as McASP pin 0x1: Pin functions as GIO pin	RW	0
12	AXR12	Determines if AXR12 pin functions as McASP or GPIO. 0x0: Pin functions as McASP pin 0x1: Pin functions as GIO pin	RW	0
11	AXR11	Determines if AXR11 pin functions as McASP or GPIO. 0x0: Pin functions as McASP pin 0x1: Pin functions as GIO pin	RW	0
10	AXR10	Determines if AXR10 pin functions as McASP or GPIO. 0x0: Pin functions as McASP pin 0x1: Pin functions as GIO pin	RW	0
9	AXR9	Determines if AXR9 pin functions as McASP or GPIO. 0x0: Pin functions as McASP pin 0x1: Pin functions as GIO pin	RW	0
8	AXR8	Determines if AXR8 pin functions as McASP or GPIO. 0x0: Pin functions as McASP pin 0x1: Pin functions as GIO pin	RW	0
7	AXR7	Determines if AXR7 pin functions as McASP or GPIO. 0x0: Pin functions as McASP pin 0x1: Pin functions as GIO pin	RW	0
6	AXR6	Determines if AXR6 pin functions as McASP or GPIO. 0x0: Pin functions as McASP pin 0x1: Pin functions as GIO pin	RW	0

Copyright © 2025 Texas Instruments Incorporated

Bits	Field Name	Description	Type	Reset
5	AXR5	Determines if AXR5 pin functions as McASP or GPIO. 0x0: Pin functions as McASP pin 0x1: Pin functions as GIO pin	RW	0
4	AXR4	Determines if AXR4 pin functions as McASP or GPIO. 0x0: Pin functions as McASP pin 0x1: Pin functions as GIO pin	RW	0
3	AXR3	Determines if AXR3 pin functions as McASP or GPIO. 0x0: Pin functions as McASP pin 0x1: Pin functions as GIO pin	RW	0
2	AXR2	Determines if AXR2 pin functions as McASP or GPIO. 0x0: Pin functions as McASP pin 0x1: Pin functions as GIO pin	RW	0
1	AXR1	Determines if AXR1 pin functions as McASP or GPIO. 0x0: Pin functions as McASP pin 0x1: Pin functions as GIO pin	RW	0
0	AXR0	Determines if AXR0 pin functions as McASP or GPIO. 0x0: Pin functions as McASP pin 0x1: Pin functions as GIO pin	RW	0

Table 11-1375. MCASP_PDIR

Address Offset	0x0000 0014		
Physical Address	0x051E 0014 0x0520 0014 0x0522 0014	**Instance**	MCASP1_CFG_PER2_L4 MCASP2_CFG_PER2_L4 MCASP3_CFG_PER2_L4
Description	Pin direction register - specifies the direction of the McASP pins as either an input or an output pin. Some register bits might not be functional for all McASP instances, due to corresponding McASP pin not being pinned out on a particular device part number. Refer to device-specific DM for more information on the supported McASP features.		
Type	RW		

31	30	29	28	27	26	25	24	23	22	21	20	19	18	17	16	15	14	13	12	11	10	9	8	7	6	5	4	3	2	1	0
AFSR	RESERVED	ACLKR	AFSX	AHCLKX	ACLKX	RESERVED										AXR15	AXR14	AXR13	AXR12	AXR11	AXR10	AXR9	AXR8	AXR7	AXR6	AXR5	AXR4	AXR3	AXR2	AXR1	AXR0

Bits	Field Name	Description	Type	Reset
31	AFSR	Determines if AFSR pin functions as an input or output. 0x0: Input 0x1: Output	RW	0
30	RESERVED	Reserved	RW	0
29	ACLKR	Determines if ACLKR pin functions as an input or output. 0x0: Input 0x1: Output	RW	0
28	AFSX	Determines if AFSX pin functions as an input or output. 0x0: Input 0x1: Output	RW	0

Copyright © 2025 Texas Instruments Incorporated

Bits	Field Name	Description	Type	Reset
27	AHCLKX	Determines if AHCLKX pin functions as an input or output. 0x0: Input 0x1: Output	RW	0
26	ACLKX	Determines if ACLKX pin functions as an input or output. 0x0: Input 0x1: Output	RW	0
25:16	RESERVED	Reserved	RW	0x000
15	AXR15	Determines if AXR15 pin functions as an input or output. 0x0: Input 0x1: Output	RW	0
14	AXR14	Determines if AXR14 pin functions as an input or output. 0x0: Input 0x1: Output	RW	0
13	AXR13	Determines if AXR13 pin functions as an input or output. 0x0: Input 0x1: Output	RW	0
12	AXR12	Determines if AXR12 pin functions as an input or output. 0x0: Input 0x1: Output	RW	0
11	AXR11	Determines if AXR11 pin functions as an input or output. 0x0: Input 0x1: Output	RW	0
10	AXR10	Determines if AXR10 pin functions as an input or output. 0x0: Input 0x1: Output	RW	0
9	AXR9	Determines if AXR9 pin functions as an input or output. 0x0: Input 0x1: Output	RW	0
8	AXR8	Determines if AXR8 pin functions as an input or output. 0x0: Input 0x1: Output	RW	0
7	AXR7	Determines if AXR7 pin functions as an input or output. 0x0: Input 0x1: Output	RW	0
6	AXR6	Determines if AXR6 pin functions as an input or output. 0x0: Input 0x1: Output	RW	0
5	AXR5	Determines if AXR5 pin functions as an input or output. 0x0: Input 0x1: Output	RW	0
4	AXR4	Determines if AXR4 pin functions as an input or output. 0x0: Input 0x1: Output	RW	0
3	AXR3	Determines if AXR3 pin functions as an input or output. 0x0: Input 0x1: Output	RW	0

Copyright © 2025 Texas Instruments Incorporated

Bits	Field Name	Description	Type	Reset
2	AXR2	Determines if AXR2 pin functions as an input or output. 0x0: Input 0x1: Output	RW	0
1	AXR1	Determines if AXR1 pin functions as an input or output. 0x0: Input 0x1: Output	RW	0
0	AXR0	Determines if AXR0 pin functions as an input or output. 0x0: Input 0x1: Output	RW	0

Table 11-1376. MCASP_PDOUT

Address Offset	0x0000 0018		
Physical Address	0x051E 0018 0x0520 0018 0x0522 0018	**Instance**	MCASP1_CFG_PER2_L4 MCASP2_CFG_PER2_L4 MCASP3_CFG_PER2_L4

Description

Pin data output register - holds a value for data out at all times, and may be read back at all times. The value held by MCASP_PDOUT is not affected by writing to MCASP_PDIR and MCASP_PFUNC. However, the data value in MCASP_PDOUT is driven out onto the McASP pin only if the corresponding bit in MCASP_PFUNC is set to 1 (GPIO function) and the corresponding bit in MCASP_PDIR is set to 1 (output).

When reading data, it returns the corresponding bit value in MCASP_PDOUT[n]; it does not return the input from the I/O pin.

When writing data, writes to the corresponding MCASP_PDOUT[n] bit.

PDOUT has these aliases or alternate addresses:

- MCASP_PDSET - when written to at this address, writing a 1 to a bit in MCASP_PDSET sets the corresponding bit in MCASP_PDOUT to 1; writing a 0 has no effect and keeps the bits in MCASP_PDOUT unchanged.
- MCASP_PDCLR - when written to at this address, writing a 1 to a bit in MCASP_PDCLR clears the corresponding bit in MCASP_PDOUT to 0; writing a 0 has no effect and keeps the bits in MCASP_PDOUT unchanged

There is only one set of data-out bits, MCASP_PDOUT[31:0]. The other registers, MCASP_PDSET and MCASP_PDCLR, are just different addresses for the same control bits, with different behaviors during writes.

Some register bits might not be functional for all McASP instances, due to corresponding McASP pin not being pinned out on a particular device part number. Refer to device-specific DM for more information on the supported McASP features.

Type RW

31	30	29	28	27	26	25	24	23	22	21	20	19	18	17	16	15	14	13	12	11	10	9	8	7	6	5	4	3	2	1	0
AFSR	AHCLKR	ACLKR	AFSX	AHCLKX	ACLKX	RESERVED										AXR15	AXR14	AXR13	AXR12	AXR11	AXR10	AXR9	AXR8	AXR7	AXR6	AXR5	AXR4	AXR3	AXR2	AXR1	AXR0

Bits	Field Name	Description	Type	Reset
31	AFSR	Determines drive on AFSR output pin when the corresponding MCASP_PFUNC[31] and MCASP_PDIR[31] bits are set to 1. 0x0: The pin drives low. 0x1: The pin drives high.	RW	0
30	AHCLKR	Determines drive on AHCLKR output pin when the corresponding MCASP_PFUNC[30] and MCASP_PDIR[30] bits are set to 1. 0x0: The pin drives low. 0x1: The pin drives high.	RW	0

Copyright © 2025 Texas Instruments Incorporated

Bits	Field Name	Description	Type	Reset
29	ACLKR	Determines drive on ACLKR output pin when the corresponding MCASP_PFUNC[29] and MCASP_PDIR[29] bits are set to 1 0x0: The pin drives low. 0x1: The pin drives high.	RW	0
28	AFSX	Determines drive on AFSX output pin when the corresponding MCASP_PFUNC[28] and MCASP_PDIR[28] bits are set to 1. 0x0: The pin drives low. 0x1: The pin drives high.	RW	0
27	AHCLKX	Determines drive on AHCLKX output pin when the corresponding MCASP_PFUNC[27] and MCASP_PDIR[27] bits are set to 1. 0x0: The pin drives low. 0x1: The pin drives high.	RW	0
26	ACLKX	Determines drive on ACLKX output pin when the corresponding MCASP_PFUNC[26] and MCASP_PDIR[26] bits are set to 1 0x0: The pin drives low. 0x1: The pin drives high.	RW	0
25:16	RESERVED	Reserved	RW	0x000
15	AXR15	Determines drive on AXR15 output pin when the corresponding MCASP_PFUNC[15] and MCASP_PDIR[15] bits are set to 1. 0x0: The pin drives low. 0x1: The pin drives high.	RW	0
14	AXR14	Determines drive on AXR14 output pin when the corresponding MCASP_PFUNC[14] and MCASP_PDIR[14] bits are set to 1. 0x0: The pin drives low. 0x1: The pin drives high.	RW	0
13	AXR13	Determines drive on AXR13 output pin when the corresponding MCASP_PFUNC[13] and MCASP_PDIR[13] bits are set to 1. 0x0: The pin drives low. 0x1: The pin drives high.	RW	0
12	AXR12	Determines drive on AXR12 output pin when the corresponding MCASP_PFUNC[12] and MCASP_PDIR[12] bits are set to 1. 0x0: The pin drives low. 0x1: The pin drives high.	RW	0
11	AXR11	Determines drive on AXR11 output pin when the corresponding MCASP_PFUNC[11] and MCASP_PDIR[11] bits are set to 1. 0x0: The pin drives low. 0x1: The pin drives high.	RW	0
10	AXR10	Determines drive on AXR10 output pin when the corresponding MCASP_PFUNC[10] and MCASP_PDIR[10] bits are set to 1. 0x0: The pin drives low. 0x1: The pin drives high.	RW	0
9	AXR9	Determines drive on AXR9 output pin when the corresponding MCASP_PFUNC[9] and MCASP_PDIR[9] bits are set to 1. 0x0: The pin drives low. 0x1: The pin drives high.	RW	0
8	AXR8	Determines drive on AXR8 output pin when the corresponding MCASP_PFUNC[8] and MCASP_PDIR[8] bits are set to 1. 0x0: The pin drives low. 0x1: The pin drives high.	RW	0

Copyright © 2025 Texas Instruments Incorporated

Bits	Field Name	Description	Type	Reset
7	AXR	Determines drive on AXR7 output pin when the corresponding MCASP_PFUNC[7] and MCASP_PDIR[7] bits are set to 1. 0x0: The pin drives low. 0x1: The pin drives high.	RW	0
6	AXR6	Determines drive on AXR6 output pin when the corresponding MCASP_PFUNC[6] and MCASP_PDIR[6] bits are set to 1. 0x0: The pin drives low. 0x1: The pin drives high.	RW	0
5	AXR5	Determines drive on AXR5 output pin when the corresponding MCASP_PFUNC[5] and MCASP_PDIR[5] bits are set to 1. 0x0: The pin drives low. 0x1: The pin drives high.	RW	0
4	AXR4	Determines drive on AXR4 output pin when the corresponding MCASP_PFUNC[4] and MCASP_PDIR[4] bits are set to 1. 0x0: The pin drives low. 0x1: The pin drives high.	RW	0
3	AXR3	Determines drive on AXR3 output pin when the corresponding MCASP_PFUNC[3] and MCASP_PDIR[3] bits are set to 1. 0x0: The pin drives low. 0x1: The pin drives high.	RW	0
2	AXR2	Determines drive on AXR2 output pin when the corresponding MCASP_PFUNC[2] and MCASP_PDIR[2] bits are set to 1. 0x0: The pin drives low. 0x1: The pin drives high.	RW	0
1	AXR1	Determines drive on AXR1 output pin when the corresponding MCASP_PFUNC[1] and MCASP_PDIR[1] bits are set to 1. 0x0: The pin drives low. 0x1: The pin drives high.	RW	0
0	AXR0	Determines drive on AXR0 output pin when the corresponding MCASP_PFUNC[0] and MCASP_PDIR[0] bits are set to 1. 0x0: The pin drives low. 0x1: The pin drives high.	RW	0

Table 11-1377. MCASP_PDIN

Address Offset	0x0000 001C		
Physical Address	0x051E 001C 0x0520 001C 0x0522 001C	**Instance**	MCASP1_CFG_PER2_L4 MCASP2_CFG_PER2_L4 MCASP3_CFG_PER2_L4
Description	Pin data input register - holds the state of all the McASP pins. MCASP_PDIN allows reading the actual value of the pin, regardless of the state of MCASP_PFUNC and MCASP_PDIR. Some register bits might not be functional for all McASP instances, due to corresponding McASP pin not being pinned out on a particular device part number. Refer to device-specific DM for more information on the supported McASP features.		
Type	R		

31	30	29	28	27	26	25	24	23	22	21	20	19	18	17	16	15	14	13	12	11	10	9	8	7	6	5	4	3	2	1	0
AFSR	RESERVED	ACLKR	AFSX	AHCLKX	ACLKX	RESERVED										AXR15	AXR14	AXR13	AXR12	AXR11	AXR10	AXR9	AXR8	AXR7	AXR6	AXR5	AXR4	AXR3	AXR2	AXR1	AXR0

Copyright © 2025 Texas Instruments Incorporated

Bits	Field Name	Description	Type	Reset
31	AFSR	Logic level on AFSR pin 0x0: Pin is logic low. 0x1: Pin is logic high.	R	0
30	RESERVED	Reserved	R	0
29	ACLKR	Logic level on ACLKR pin 0x0: Pin is logic low. 0x1: Pin is logic high.	R	0
28	AFSX	Logic level on AFSX pin 0x0: Pin is logic low. 0x1: Pin is logic high.	R	0
27	AHCLKX	Logic level on AHCLKX pin 0x0: Pin is logic low. 0x1: Pin is logic high.	R	0
26	ACLKX	Logic level on ACLKX pin 0x0: Pin is logic low. 0x1: Pin is logic high.	R	0
25:16	RESERVED	Reserved	R	0x000
15	AXR15	Logic level on AXR15 pin 0x0: Pin is logic low. 0x1: Pin is logic high.	R	0
14	AXR14	Logic level on AXR14 pin 0x0: Pin is logic low. 0x1: Pin is logic high.	R	0
13	AXR13	Logic level on AXR13 pin 0x0: Pin is logic low. 0x1: Pin is logic high.	R	0
12	AXR12	Logic level on AXR12 pin 0x0: Pin is logic low. 0x1: Pin is logic high.	R	0
11	AXR11	Logic level on AXR11 pin 0x0: Pin is logic low. 0x1: Pin is logic high.	R	0
10	AXR10	Logic level on AXR10 pin 0x0: Pin is logic low. 0x1: Pin is logic high.	R	0
9	AXR9	Logic level on AXR9 pin 0x0: Pin is logic low. 0x1: Pin is logic high.	R	0
8	AXR8	Logic level on AXR8 pin 0x0: Pin is logic low. 0x1: Pin is logic high.	R	0
7	AXR7	Logic level on AXR7 pin 0x0: Pin is logic low. 0x1: Pin is logic high.	R	0
6	AXR6	Logic level on AXR6 pin 0x0: Pin is logic low. 0x1: Pin is logic high.	R	0

Copyright © 2025 Texas Instruments Incorporated

Bits	Field Name	Description	Type	Reset
5	AXR5	Logic level on AXR5 pin 0x0: Pin is logic low. 0x1: Pin is logic high.	R	0
4	AXR4	Logic level on AXR4 pin 0x0: Pin is logic low. 0x1: Pin is logic high.	R	0
3	AXR3	Logic level on AXR3 pin 0x0: Pin is logic low. 0x1: Pin is logic high.	R	0
2	AXR2	Logic level on AXR2 pin 0x0: Pin is logic low. 0x1: Pin is logic high.	R	0
1	AXR1	Logic level on AXR1 pin 0x0: Pin is logic low. 0x1: Pin is logic high.	R	0
0	AXR0	Logic level on AXR0 pin 0x0: Pin is logic low. 0x1: Pin is logic high.	R	0

Table 11-1378. MCASP_PDCLR

Address Offset	0x0000 0020		
Physical Address	0x051E 0020 0x0520 0020 0x0522 0020	**Instance**	MCASP1_CFG_PER2_L4 MCASP2_CFG_PER2_L4 MCASP3_CFG_PER2_L4
Description	The pin data clear register is an alias of the pin data output register (MCASP_PDOUT) for writes only. Writing a 1 to the MCASP_PDCLR bit clears the corresponding bit in MCASP_PDOUT and, if MCASP_PFUNC = 1 (GPIO function) and MCASP_PDIR = 1 (output), drives a logic low on the pin. Some register bits might not be functional for all McASP instances, due to corresponding McASP pin not being pinned out on a particular device part number. Refer to device-specific DM for more information on the supported McASP features.		
Type	RW		

31	30	29	28	27	26	25	24	23	22	21	20	19	18	17	16	15	14	13	12	11	10	9	8	7	6	5	4	3	2	1	0
AFSR	RESERVED	ACLKR	AFSX	AHCLKX	ACLKX	RESERVED										AXR15	AXR14	AXR13	AXR12	AXR11	AXR10	AXR9	AXR8	AXR7	AXR6	AXR5	AXR4	AXR3	AXR2	AXR1	AXR0

Bits	Field Name	Description	Type	Reset
31	AFSR	Allows the corresponding AFSR bit in MCASP_PDOUT to be cleared to a logic low without affecting other I/O pins controlled by the same port. 0x0: No effect 0x1: MCASP_PDOUT[31] bit is cleared to 0.	RW	0
30	RESERVED	Reserved	RW	0
29	ACLKR	Allows the corresponding ACLKR bit in MCASP_PDOUT to be cleared to a logic low without affecting other I/O pins controlled by the same port. 0x0: No effect 0x1: MCASP_PDOUT[29] bit is cleared to 0.	RW	0

Copyright © 2025 Texas Instruments Incorporated

Bits	Field Name	Description	Type	Reset
28	AFSX	Allows the corresponding AFSX bit in MCASP_PDOUT to be cleared to a logic low without affecting other I/O pins controlled by the same port. 0x0: No effect 0x1: MCASP_PDOUT[28] bit is cleared to 0.	RW	0
27	AHCLKX	Allows the corresponding AHCLKX bit in MCASP_PDOUT to be cleared to a logic low without affecting other I/O pins controlled by the same port. 0x0: No effect 0x1: MCASP_PDOUT[27] bit is cleared to 0.	RW	0
26	ACLKX	Allows the corresponding ACLKX bit in MCASP_PDOUT to be cleared to a logic low without affecting other I/O pins controlled by the same port. 0x0: No effect 0x1: MCASP_PDOUT[26] bit is cleared to 0.	RW	0
25:16	RESERVED	Reserved	RW	0x000
15	AXR15	Allows the AXR15 bit in MCASP_PDOUT to be cleared to a logic low without affecting other I/O pins controlled by the same port. 0x0: No effect 0x1: MCASP_PDOUT[15] bit is cleared to 0.	RW	0
14	AXR14	Allows the AXR14 bit in MCASP_PDOUT to be cleared to a logic low without affecting other I/O pins controlled by the same port. 0x0: No effect 0x1: MCASP_PDOUT[14] bit is cleared to 0.	RW	0
13	AXR13	Allows the AXR13 bit in MCASP_PDOUT to be cleared to a logic low without affecting other I/O pins controlled by the same port. 0x0: No effect 0x1: MCASP_PDOUT[13] bit is cleared to 0.	RW	0
12	AXR12	Allows the AXR12 bit in MCASP_PDOUT to be cleared to a logic low without affecting other I/O pins controlled by the same port. 0x0: No effect 0x1: MCASP_PDOUT[12] bit is cleared to 0.	RW	0
11	AXR11	Allows the AXR11 bit in MCASP_PDOUT to be cleared to a logic low without affecting other I/O pins controlled by the same port. 0x0: No effect 0x1: MCASP_PDOUT[11] bit is cleared to 0.	RW	0
10	AXR10	Allows the AXR10 bit in MCASP_PDOUT to be cleared to a logic low without affecting other I/O pins controlled by the same port. 0x0: No effect 0x1: MCASP_PDOUT[10] bit is cleared to 0.	RW	0
9	AXR9	Allows the AXR9 bit in MCASP_PDOUT to be cleared to a logic low without affecting other I/O pins controlled by the same port. 0x0: No effect 0x1: MCASP_PDOUT[9] bit is cleared to 0.	RW	0
8	AXR8	Allows the AXR8 bit in MCASP_PDOUT to be cleared to a logic low without affecting other I/O pins controlled by the same port. 0x0: No effect 0x1: MCASP_PDOUT[8] bit is cleared to 0.	RW	0
7	AXR7	Allows the AXR7 bit in MCASP_PDOUT to be cleared to a logic low without affecting other I/O pins controlled by the same port. 0x0: No effect 0x1: MCASP_PDOUT[7] bit is cleared to 0.	RW	0

Copyright © 2025 Texas Instruments Incorporated

Bits	Field Name	Description	Type	Reset
6	AXR6	Allows the AXR6 bit in MCASP_PDOUT to be cleared to a logic low without affecting other I/O pins controlled by the same port. 0x0: No effect 0x1: MCASP_PDOUT[6] bit is cleared to 0.	RW	0
5	AXR5	Allows the AXR5 bit in MCASP_PDOUT to be cleared to a logic low without affecting other I/O pins controlled by the same port. 0x0: No effect 0x1: MCASP_PDOUT[5] bit is cleared to 0.	RW	0
4	AXR4	Allows the AXR4 bit in MCASP_PDOUT to be cleared to a logic low without affecting other I/O pins controlled by the same port. 0x0: No effect 0x1: MCASP_PDOUT[4] bit is cleared to 0.	RW	0
3	AXR3	Allows the AXR3 bit in MCASP_PDOUT to be cleared to a logic low without affecting other I/O pins controlled by the same port. 0x0: No effect 0x1: MCASP_PDOUT[3] bit is cleared to 0.	RW	0
2	AXR2	Allows the AXR2 bit in MCASP_PDOUT to be cleared to a logic low without affecting other I/O pins controlled by the same port. 0x0: No effect 0x1: MCASP_PDOUT[2] bit is cleared to 0.	RW	0
1	AXR1	Allows the AXR1 bit in MCASP_PDOUT to be cleared to a logic low without affecting other I/O pins controlled by the same port. 0x0: No effect 0x1: MCASP_PDOUT[1] bit is cleared to 0.	RW	0
0	AXR0	Allows the AXR0 bit in MCASP_PDOUT to be cleared to a logic low without affecting other I/O pins controlled by the same port. 0x0: No effect 0x1: MCASP_PDOUT[0] bit is cleared to 0.	RW	0

Table 11-1379. MCASP_GBLCTL

Address Offset	0x0000 0044		
Physical Address	0x051E 0044 0x0520 0044 0x0522 0044	**Instance**	MCASP1_CFG_PER2_L4 MCASP2_CFG_PER2_L4 MCASP3_CFG_PER2_L4
Description	Global transmit control register - provides initialization of the transmit and receive sections. The bit fields in MCASP_GBLCTL are synchronized and latched by the transmitter and receiver corresponding clocks - ACLKX (bits [12:8]) and ACLKR (bits [4:0]), respectively. Before programming MCASP_GBLCTL, ensure that the serial clocks are running. If the corresponding external serial clocks - ACLKX and ACLKR, are not yet running, select the internal serial clock source in AHCLKXCTL, AHCLKRCTL, ACLKXCTL and ACLKRCTL before programming the MCASP_GBLCTL. Also, after programming any bits in MCASP_GBLCTL, do not proceed until reading back from MCASP_GBLCTL and verifying that the bits in MCASP_GBLCTL are latched.		
Type	RW		

31	30	29	28	27	26	25	24	23	22	21	20	19	18	17	16	15	14	13	12	11	10	9	8	7	6	5	4	3	2	1	0
RESERVED																			XFRST	XSMRST	XSRCLR	XHCLKRST	XCLKRST	RESERVED			RFRST	RSMRST	RSRCLR	RHCLKRST	RCLKRST

Bits	Field Name	Description	Type	Reset
31:13	RESERVED	Reserved	RW	0x00000

Copyright © 2025 Texas Instruments Incorporated

Bits	Field Name	Description	Type	Reset
12	XFRST	Transmit frame-sync generator reset enable bit 0x0: The transmit frame-sync generator is reset. 0x1: The transmit frame-sync generator is active. When released from reset, the transmit frame-sync generator begins counting serial clocks and generating frame sync as programmed.	RW	0
11	XSMRST	Transmit state-machine reset enable bit 0x0: The transmit state-machine is held in reset. AXR[n] pin state: If MCASP_PFUNC[n] = 0 and MCASP_PDIR[n] = 1, the corresponding serializer [n] drives the AXR[n] pin to the state specified for inactive time slot. 0x1: The transmit state-machine is released from reset. When released from reset, the transmit state-machine immediately transfers data from XBUF[n] to XRSR[n]. The transmit state-machine sets the underrun flag (XUNDRN) in MCASP_XSTAT, if XBUF[n] have not been preloaded with data before reset is released. The transmit state-machine also immediately begins detecting frame sync and is ready to transmit. Transmission of TDM time slot begins at slot 0 after reset is released.	RW	0
10	XSRCLR	Transmit serializer clear enable bit. By clearing and then setting this bit, the transmit buffer is flushed to an empty state (XDATA = 1). If XSMRST = 1, XSRCLR = 1, XDATA = 1, and XBUF is not loaded with new data before the start of the next active time slot, an underrun occurs. 0x0: The transmit serializer is cleared. 0x1: The transmit serializer is active. When the transmit serializer is first taken out of reset (XSRCLR changes from 0 to 1), the transmit data ready bit (XDATA) in MCASP_XSTAT is set to indicate XBUF is ready to be written.	RW	0
9	XHCLKRST	Transmit high-frequency clock divider reset enable bit 0x0: The transmitter high-frequency clock divider is held in reset and passes through its input as divide-by-1. 0x1: The transmitter high-frequency clock divider is running.	RW	0
8	XCLKRST	Transmit clock divider reset enable bit 0x0: The transmit clock divider is held in reset. When the clock divider is in reset, it passes through a divide-by-1 of its input. 0x1: The transmit clock divider is running.	RW	0
7:5	RESERVED	Reserved	RW	0x0
4	RFRST	Receive frame sync generator reset enable bit. 0x0: Receive frame sync generator is reset. 0x1: Receive frame sync generator is active. When released from reset, the receive frame sync generator begins counting serial clocks and generating frame sync as programmed.	RW	0
3	RSMRST	Receive state machine reset enable bit. 0x0: Receive state machine is held in reset. 0x1: Receive state machine is released from reset. When released from reset, the receive state machine immediately begins detecting frame sync and is ready to receive. Receive TDM time slot begins at slot 0 after reset is released.	RW	0
2	RSRCLR	Receive serializer clear enable bit. By clearing then setting this bit, the receive buffer is flushed. 0x0: Receive serializers are cleared. 0x1: Receive serializers are active.	RW	0
1	RHCLKRST	Receive high-frequency clock divider reset enable bit. 0x0: Receive high-frequency clock divider is held in reset and passes through its input as divide-by-1. 0x1: Receive high-frequency clock divider is running.	RW	0

Copyright © 2025 Texas Instruments Incorporated

Bits	Field Name	Description	Type	Reset
0	RCLKRST	Receive clock divider reset enable bit. 0x0: Receive clock divider is held in reset. When the clock divider is in reset, it passes through a divide-by-1 of its input. 0x1: Receive clock divider is running.	RW	0

Table 11-1380. MCASP_AMUTE

Address Offset	0x0000 0048		
Physical Address	0x051E 0048 0x0520 0048 0x0522 0048	**Instance**	MCASP1_CFG_PER2_L4 MCASP2_CFG_PER2_L4 MCASP3_CFG_PER2_L4
Description	Mute control register - Controls the McASP mute output pin - AMUTE (Not implemented at device level)		
Type	RW		

31	30	29	28	27	26	25	24	23	22	21	20	19	18	17	16	15	14	13	12	11	10	9	8	7	6	5	4	3	2	1	0
RESERVED																															

Bits	Field Name	Description	Type	Reset
31:0	RESERVED	Reserved	RW	0x0000 0000

Table 11-1381. MCASP_DLBCTL

Address Offset	0x0000 004C		
Physical Address	0x051E 004C 0x0520 004C 0x0522 004C	**Instance**	MCASP1_CFG_PER2_L4 MCASP2_CFG_PER2_L4 MCASP3_CFG_PER2_L4
Description	The digital loopback control register (MCASP_LBCTL) controls the internal (McASP module)- level and chip-level loopback settings of the McASP in TDM mode. Note that loopback is NOT supported if McASP is configured in DIT mode.		
Type	RW		

31	30	29	28	27	26	25	24	23	22	21	20	19	18	17	16	15	14	13	12	11	10	9	8	7	6	5	4	3	2	1	0
RESERVED																											IOLBEN	MODE			ORD	DLBEN

Bits	Field Name	Description	Type	Reset
31:5	RESERVED	Reserved	RW	0x000 0000
4	IOLBEN	If DLBEN=0b1, the IOLBEN bit selects between **internal-level (McASP module-level)** and **chip I/O-level** loopback modes. IOLBEN bit value is irrelevant, If DLBEN=0b0. 0x0: McASP internal loopback mode enabled. This selects a direct loopback between corresponding McASP AXRn and AXRn+1 pins, bypassing device pad I/O buffers. 0x1: Chip I/O-level loopback mode enabled. The McASP data is looped back through the device pad I/O buffers.	RW	0
3:2	MODE	Loopback generator mode bits. 0x0: RESERVED 0x1: MODE must be set to 0x1 when McASP operates in loopback mode (DLBEN =0b1). This is necessary to allow transmit clock and frame sync generators to be used by both transmit and receive sections. 0x2, 0x3: Reserved	RW	0x0

Copyright © 2025 Texas Instruments Incorporated

Bits	Field Name	Description	Type	Reset
1	ORD	Loopback order bit when loopback mode is enabled (DLBEN = 1). 0x0: Odd serializers N + 1 transmit to even serializers N that receive. The corresponding serializers must be programmed properly. 0x1: Even serializers N transmit to odd serializers N+1 that receive. The corresponding serializers must be programmed properly.	RW	0
0	DLBEN	Loop back mode enable bit. 0x0: Loop back mode is disabled (normal McASP operation). 0x1: Loop back is enabled (TDM mode only). Loopback type is selected in IOLBEN bit.	RW	0

Table 11-1382. MCASP_DITCTL

Address Offset	0x0000 0050		
Physical Address	0x051E 0050 0x0520 0050 0x0522 0050	**Instance**	MCASP1_CFG_PER2_L4 MCASP2_CFG_PER2_L4 MCASP3_CFG_PER2_L4
Description	Transmit DIT mode control register, controls DIT operations of the McASP		
Type	RW		

31	30	29	28	27	26	25	24	23	22	21	20	19	18	17	16	15	14	13	12	11	10	9	8	7	6	5	4	3	2	1	0
RESERVED																												VB	VA	RESERVED	DITEN

Bits	Field Name	Description	Type	Reset
31:4	RESERVED	Reserved	RW	0x0000000
3	VB	Valid bit for odd time slots (DIT right subframe). 0x0: V bit is 0 during odd DIT subframes. 0x1: V bit is 1 during odd DIT subframes.	RW	0
2	VA	Valid bit for even time slots (DIT left subframe). 0x0: V bit is 0 during even DIT subframes. 0x1: V bit is 1 during even DIT subframes.	RW	0
1	RESERVED	Reserved	RW	0
0	DITEN	DIT mode enable bit 0x0: DIT mode is disabled. 0x1: DIT mode is enabled. Transmitter operates in DIT encoded mode.	RW	0

Table 11-1383. MCASP_RGBLCTLR

Address Offset	0x0000 0060		
Physical Address	0x051E 0060 0x0520 0060 0x0522 0060	**Instance**	MCASP1_CFG_PER2_L4 MCASP2_CFG_PER2_L4 MCASP3_CFG_PER2_L4
Description	Alias of GBLCTL. When writing to this register, only the TRANSMIT bits of GBLCTL are affected (This means GBLCTL bits 8,9,10,11,12). Reads return GBLCTL		
Type	RW		

31	30	29	28	27	26	25	24	23	22	21	20	19	18	17	16	15	14	13	12	11	10	9	8	7	6	5	4	3	2	1	0

Copyright © 2025 Texas Instruments Incorporated

RESERVED	XFRST	XSMRST	XSRCLR	XHCLKRST	XCLKRST	RESERVED	RFRST	RSMRST	RSRCLR	RHCLKRST	RCLKRST

Bits	Field Name	Description	Type	Reset
31:13	RESERVED		RW	0x0
12	XFRST	Frame sync generator reset 0x0: RESET 0x1: ACTIVE	R	0x0
11	XSMRST	XMT state machine reset 0x0: RESET 0x1: ACTIVE	R	0x0
10	XSRCLR	XMT serializer clear 0x0: CLEAR 0x1: ACTIVE	R	0x0
9	XHCLKRST	XMT High Freq. clk Divider 0x0: RESET 0x1: ACTIVE	R	0x0
8	XCLKRST	XMT clock divder reset 0x0: RESET 0x1: ACTIVE	R	0x0
7:5	RESERVED		RW	0x0
4	RFRST	Frame sync generator reset 0x0: RESET 0x1: ACTIVE	RW	0x0
3	RSMRST	RCV state machine reset 0x0: RESET 0x1: ACTIVE	RW	0x0
2	RSRCLR	RCV serializer clear 0x0: CLEAR 0x1: ACTIVE	RW	0x0
1	RHCLKRST	RCV High Freq. clk Divider 0x0: RESET 0x1: ACTIVE	RW	0x0
0	RCLKRST	RCV clock divder reset 0x0: RESET 0x1: ACTIVE	RW	0x0

Table 11-1384. MCASP_RMASK

Address Offset	0x0000 0064		
Physical Address	0x051E 0064 0x0520 0064 0x0522 0064	**Instance**	MCASP1_CFG_PER2_L4 MCASP2_CFG_PER2_L4 MCASP3_CFG_PER2_L4
Description	The receive format unit bit mask register (MCASP_RXMASK) determines which bits of the received data are masked off and padded with a known value before being read by the CPU.		
Type	RW		

31	30	29	28	27	26	25	24	23	22	21	20	19	18	17	16	15	14	13	12	11	10	9	8	7	6	5	4	3	2	1	0

Copyright © 2025 Texas Instruments Incorporated

RMASK[31:0]

Bits	Field Name	Description	Type	Reset
31: 0	RMASK[31:0]	Receive data mask enable bit. 0x0: Corresponding bit of receive data (after passing through reverse and rotate units) is masked out and then padded with the selected bit pad value (RPAD and RPBIT bits in RFMT). 0x1: Corresponding bit of receive data (after passing through reverse and rotate units) is returned to CPU or DMA.	RW	0

Table 11-1385. MCASP_RFMT

Address Offset	0x0000 0068		
Physical Address	0x051E 0068 0x0520 0068 0x0522 0068	**Instance**	MCASP1_CFG_PER2_L4 MCASP2_CFG_PER2_L4 MCASP3_CFG_PER2_L4
Description	The receive bit stream format register (MCASP_RXFMT) configures the receive data format.		
Type	RW		

31	30	29	28	27	26	25	24	23	22	21	20	19	18	17	16	15	14	13	12	11	10	9	8	7	6	5	4	3	2	1	0
RESERVED														RDATDLY		RRVRS	RPAD				RPBIT			RSSZ				RBUSEL	RROT		

Bits	Field Name	Description	Type	Reset
31:18	RESERVED		RW	0x0000
17:16	RDATDLY	Receive Frame sync delay of AXR[n] 0x0: 0-bit delay. The first receive data bit, AXR[n], occurs in same ACLKR cycle as the receive frame sync (AFSR). 0x1: 1-bit delay. The first receive data bit, AXR[n], occurs one ACLKR cycle after the receive frame sync (AFSR). 0x2: 2-bit delay. The first receive data bit, AXR[n], occurs two ACLKR cycles after the receive frame sync (AFSR). 0x3: Reserved	RW	0x0
15	RRVRS	Receive serial bitstream order 0x0: Bitstream is LSB first. No bit reversal is performed in receive format bit reverse unit. 0x1: Bitstream is MSB first. Bit reversal is performed in receive format bit reverse unit.	RW	0
14:13	RPAD	Pad value for extra bits in slot not belonging to the word. This field only applies to bits when RMASK[n] = 0. 0x0: Pad extra bits with 0. 0x1: Pad extra bits with 1. 0x2: Pad extra bits with one of the bits from the word as specified by RPBIT bits. 0x3: Reserved	RW	0x0
12:8	RPBIT	RPBIT value determines which bit (as read by the CPU from RBUF[n]) is used to pad the extra bits. This field only applies when RPAD = 2h. 0x0: Pad with value of bit RBUFn[0]. 0x01 - 0x1F: Pad with value of the bit positioned within the range RBUFn[31:1].	RW	0x00

Copyright © 2025 Texas Instruments Incorporated

Bits	Field Name	Description	Type	Reset
7:4	RSSZ	Receive slot size. 0x0 - 0x2: Reserved 0x3: Slot size is 8 bits 0x4: Reserved 0x5: Slot size is 12 bits 0x6: Reserved 0x7: Slot size is 16 bits 0x8: Reserved 0x9: Slot size is 20 bits 0xA: Reserved 0xB: Slot size is 24 bits 0xC: Reserved 0xD: Slot size is 28 bits 0xE: Reserved 0xF: Slot size is 32 bits	RW	0x0
3	RBUSEL	Selects whether reads from serializer buffer RBUF[n] originate from the peripheral configuration CFG port or the DATA port. 0x0: Reads from XRBUF[n] originate on DATA port. Reads from XRBUF[n] on the peripheral configuration port are ignored. 0x1: Reads from XRBUF[n] originate on peripheral configuration port. Reads from XRBUF[n] on the DATA port are ignored.	RW	0
2:0	RROT	Right-rotation value for receive rotate right format unit. 0x0: Rotate right by 0 (no rotation). 0x1: Rotate right by 4 bit positions. 0x2: Rotate right by 8 bit positions. 0x3: Rotate right by 12 bit positions. 0x4: Rotate right by 16 bit positions. 0x5: Rotate right by 20 bit positions. 0x6: Rotate right by 24 bit positions. 0x7: Rotate right by 28 bit positions.	RW	0x0

Table 11-1386. MCASP_AFSRCTL

Address Offset	0x0000 006C		
Physical Address	0x051E 006C 0x0520 006C 0x0522 006C	**Instance**	MCASP1_CFG_PER2_L4 MCASP2_CFG_PER2_L4 MCASP3_CFG_PER2_L4
Description	The receive frame sync control register (MCASP_RXFMCTL) configures the receive frame sync (AFSR).		
Type	RW		

31	30	29	28	27	26	25	24	23	22	21	20	19	18	17	16	15	14	13	12	11	10	9	8	7	6	5	4	3	2	1	0
RESERVED																RMOD								RESERVED			FRWID	RESERVED		FSRM	FSRP

Bits	Field Name	Description	Type	Reset
31:16	RESERVED		RW	0x0000

Copyright © 2025 Texas Instruments Incorporated

Bits	Field Name	Description	Type	Reset
15:7	RMOD	Receive frame sync mode select bits. 0x0: Burst mode 0x1: Reserved 0x2: 2-slot TDM mode (I2S receive mode) 0x3 - 0x20: 3-slot TDM to 32-slot TDM mode 0x21 - 0x17F: Reserved 0x180: 384-slot TDM (external DIR IC inputting 384-slot DIR frames to McASP) 0x181 - 0x1FF: Reserved	RW	0x000
6:5	RESERVED		RW	0x0
4	FRWID	Receive frame sync width select bit indicates the width of the receive frame sync (AFSR) during its active period. 0x0: Single bit 0x1: Single word. Single word is not supported if RMOD is set to burst mode.	RW	0
3:2	RESERVED		RW	0x0
1	FSRM	Receive frame sync generation select bit. 0x0: Externally-generated receive frame sync 0x1: Internally-generated receive frame sync	RW	0
0	FSRP	Receive frame sync polarity select bit. 0x0: A rising edge on receive frame sync (AFSR) indicates the beginning of a frame. 0x1: A falling edge on receive frame sync (AFSR) indicates the beginning of a frame.	RW	0

Table 11-1387. MCASP_ACLKRCTL

Address Offset	0x0000 0070		
Physical Address	0x051E 0070 0x0520 0070 0x0522 0070	**Instance**	MCASP1_CFG_PER2_L4 MCASP2_CFG_PER2_L4 MCASP3_CFG_PER2_L4
Description	The receive clock control register (MCASP_ACLKRCTL) configures the receive bit clock (ACLKR) and the receive clock generator.		
Type	RW		

31	30	29	28	27	26	25	24	23	22	21	20	19	18	17	16	15	14	13	12	11	10	9	8	7	6	5	4	3	2	1	0
RESERVED											BUSY	DIVBUSY	ADJBUSY	CLKRADJ		RESERVED								CLKRP	RESERVED	CLKRM	CLKRDIV				

Bits	Field Name	Description	Type	Reset
31:21	RESERVED		RW	0x000000
20	BUSY	Status: logical OR of DIVBUSY, ADJBUSY. Not supported. 0x0: NOTBUSY 0x1: BUSY	RW	0
19	DIVBUSY	Status: divide ratio change in progress? Not supported. 0x0: NOTBUSY 0x1: BUSY	RW	0x0

Copyright © 2025 Texas Instruments Incorporated

Bits	Field Name	Description	Type	Reset
18	ADJBUSY	Status: one-shot adjustment in progress? Not supported. 0x0: NOTBUSY 0x1: BUSY	RW	0x0
17:16	CLKRADJ	CLKRDIV one-shot adjustment. Not supported. Bit field must always be written as 0x0.If CLKRDIV is set such that there are “m” input clocks per one output clock, then for one output cycle: 00 = (m+0) input clocks per output clock, i.e. no adjustment 01 = (m-1) input clocks per output clock 10 = (m+1) input clocks per output clock 11 = (m+0) input clocks per output clock, i.e. no adjustment NOTE: writes to these bits are ineffective if CLKADJEN:ENABLE bit is set to 0b. These bits are ALWAYS read back as zero.	W	0x0
15:8	RESERVED		RW	0x0
7	CLKRP	Receive bitstream clock polarity select bit. Note that this bitfield does not have any effect, if MCASP_ACLKXCTL[6] ASYNC = 0 0x0: Falling edge. Receiver samples data on the falling edge of the serial clock, so the external transmitter driving this receiver must shift data out on the rising edge of the serial clock. 0x1: Rising edge. Receiver samples data on the rising edge of the serial clock, so the external transmitter driving this receiver must shift data out on the falling edge of the serial clock.	RW	0
6	RESERVED		RW	0
5	CLKRM	Receive bit clock source bit. Note that this bitfield does not have any effect, if MCASP_ACLKXCTL[6] ASYNC = 0 0x0: External receive clock source from ACLKR pin. 0x1: Internal receive clock source from output of programmable bit clock divider.	RW	1
4:0	CLKRDIV	Receive bit clock divide ratio bits determine the divide-down ratio from AHCLKR to ACLKR. Note that this bitfield does not have any effect, if MCASP_ACLKXCTL[6] ASYNC = 0. 0x0: Divide-by-1 0x1: Divide-by-2 0x2 - 0x1F: Divide-by-3 to divide-by-32	RW	0x00

Table 11-1388. MCASP_AHCLKRCTL

Address Offset	0x0000 0074		
Physical Address	0x051E 0074 0x0520 0074 0x0522 0074	**Instance**	MCASP1_CFG_PER2_L4 MCASP2_CFG_PER2_L4 MCASP3_CFG_PER2_L4
Description	The receive high-frequency clock control register (MCASP_AHCLKRCTL) configures the receive high-frequency master clock (AHCLKR) and the receive clock generator.		
Type	RW		

31	30	29	28	27	26	25	24	23	22	21	20	19	18	17	16	15	14	13	12	11	10	9	8	7	6	5	4	3	2	1	0
RESERVED								ADJBUSY		CLKRADJ		RESERVED		CLKRP	RESERVED	CLKRM	CLKRDIV														

Copyright © 2025 Texas Instruments Incorporated

RESERVED	BUSY	DIVBUSY	ADJBUSY	HCLKRADJ	HCLKRM	HCLKRP	RESERVED	HCLKRDIV

Bits	Field Name	Description	Type	Reset
31:21	RESERVED		RW	0x0000
20	BUSY	Status: logical OR of DIVBUSY, ADJBUSY. Not supported. 0x0: NOTBUSY 0x1: BUSY	RW	0x0
19	DIVBUSY	Status: divide ratio change in progress? Not supported. 0x0: NOTBUSY 0x1: BUSY	RW	0x0
18	ADJBUSY	Status: one-shot adjustment in progress? Not supported. 0x0: NOTBUSY 0x1: BUSY	RW	0x0
17:16	HCLKRADJ	HCLKRDIV one-shot adjustment. Not supported. Bit field must always be written as 0x0. If HCLKRDIV is set such that there are “m” input clocks per one output clock, then for one output cycle: 00 = (m+0) input clocks per output clock, i.e. no adjustment 01 = (m-1) input clocks per output clock 10 = (m+1) input clocks per output clock 11 = (m+0) input clocks per output clock, i.e. no adjustment NOTE: writes to these bits are ineffective if CLKADJEN:ENABLE bit is set to 0b. These bits are ALWAYS read back as zero.	W	0x0
15	HCLKRM	High Freq. RCV clock Source 0x0: EXTERNAL 0x1: INTERNAL	RW	0x1
14	HCLKRP	Receive bitstream high-frequency clock polarity select bit. 0x0: Not inverted. AHCLKR is not inverted before programmable bit clock divider. 0x1: Inverted. AHCLKR is inverted before programmable bit clock divider.	RW	0
13:12	RESERVED		RW	0x0
11:0	HCLKRDIV	Receive high-frequency clock divide ratio bits determine the divide-down ratio from AUXCLK to AHCLKR. 0x0: Divide-by-1 0x1: Divide-by-2 0x2 - 0xFFF: Divide-by-3 to divide-by-4096	RW	0x000

Table 11-1389. MCASP_RTDM

Address Offset	0x0000 0078		
Physical Address	0x051E 0078 0x0520 0078 0x0522 0078	**Instance**	MCASP1_CFG_PER2_L4 MCASP2_CFG_PER2_L4 MCASP3_CFG_PER2_L4
Description	The receive TDM time slot register (MCASP_RXTDM) specifies which TDM time slot the receiver is active.		
Type	RW		

Copyright © 2025 Texas Instruments Incorporated

31	30	29	28	27	26	25	24	23	22	21	20	19	18	17	16	15	14	13	12	11	10	9	8	7	6	5	4	3	2	1	0
RTDMS[31:0]																															

Bits	Field Name	Description	Type	Reset
31:0	RTDMS[31:0]	Receiver mode during TDM time slot n. 0x0: Receive TDM time slot n is inactive. The receive serializer does not shift in data during this slot. 0x1: Receive TDM time slot n is active. The receive serializer shifts in data during this slot.	RW	0

Table 11-1390. MCASP_RINTCTL

Address Offset	0x0000 007C		
Physical Address	0x051E 007C 0x0520 007C 0x0522 007C	**Instance**	MCASP1_CFG_PER2_L4 MCASP2_CFG_PER2_L4 MCASP3_CFG_PER2_L4
Description	Receiver Interrupt control register - controls generation of the McASP receive interrupt (RINT). When the register bit(s) is set to 1, the occurrence of the enabled McASP condition(s) generates RINT.		
Type	RW		

31	30	29	28	27	26	25	24	23	22	21	20	19	18	17	16	15	14	13	12	11	10	9	8	7	6	5	4	3	2	1	0
RESERVED																								RSTAFRM	RESERVED	RDATA	RLAST	RDMAERR	RCKFAIL	RSYNCERR	ROVRN

Bits	Field Name	Description	Type	Reset
31:8	RESERVED	Reserved	RW	0x000000
7	RSTAFRM	Receive start of frame interrupt enable bit 0x0: Interrupt is disabled. A receive-start-of-frame interrupt does not generate a McASP receive interrupt (RINT). 0x1: Interrupt is enabled. A receive-start-of-frame interrupt generates a McASP receive interrupt (RINT).	RW	0
6	RESERVED	Reserved	RW	0
5	RDATA	Receive data-ready interrupt enable bit 0x0: Interrupt is disabled. A receive data-ready interrupt does not generate a McASP receive interrupt (RINT). 0x1: Interrupt is enabled. A receive data-ready interrupt generates a McASP receive interrupt (RINT).	RW	0
4	RLAST	Receive last slot interrupt enable bit 0x0: Interrupt is disabled. A receive-last-slot interrupt does not generate a McASP receive interrupt (RINT). 0x1: Interrupt is enabled. A receive-last-slot interrupt generates a McASP receive interrupt (RINT).	RW	0
3	RDMAERR	Receive DMA error interrupt enable bit 0x0: Interrupt is disabled. A receive DMA error interrupt does not generate a McASP receive interrupt (RINT). 0x1: Interrupt is enabled. A receive DMA error interrupt generates a McASP receive interrupt (RINT).	RW	0
2	RCKFAIL	Receive clock failure interrupt enable bit 0x0: Interrupt is disabled. A receive clock failure interrupt does not generate a McASP receive interrupt (RINT). 0x1: Interrupt is enabled. A receive clock failure interrupt generates a McASP receive interrupt (RINT).	RW	0

Copyright © 2025 Texas Instruments Incorporated

Bits	Field Name	Description	Type	Reset
1	RSYNCERR	Unexpected receive frame-sync interrupt enable bit 0x0: Interrupt is disabled. An unexpected receive frame-sync interrupt does not generate a McASP receive interrupt (RINT). 0x1: Interrupt is enabled. An unexpected receive frame-sync interrupt generates a McASP receive interrupt (RINT).	RW	0
0	ROVRN	Receiver overrun interrupt enable bit 0x0: Interrupt is disabled. A receiver overrun interrupt does not generate a McASP receive interrupt (RINT). 0x1: Interrupt is enabled. A receiver overrun interrupt generates a McASP receive interrupt (RINT).	RW	0

Table 11-1391. MCASP_RSTAT

Address Offset	0x0000 0080		
Physical Address	0x051E 0080 0x0520 0080 0x0522 0080	**Instance**	MCASP1_CFG_PER2_L4 MCASP2_CFG_PER2_L4 MCASP3_CFG_PER2_L4
Description	The receiver status register (MCASP_RXSTAT) provides the receiver status and receive TDM time slot number.		
Type	RW		

31	30	29	28	27	26	25	24	23	22	21	20	19	18	17	16	15	14	13	12	11	10	9	8	7	6	5	4	3	2	1	0
RESERVED																							RERR	RDMAERR	RSTAFRM	RDATA	RLAST	RTDMSLOT	RCKFAIL	RSYNCERR	ROVRN

Bits	Field Name	Description	Type	Reset
31:9	RESERVED		RW	0x00 0000
8	RERR	RERR bit always returns a logic-OR of: ROVRN | RSYNCERR | RCKFAIL | RDMAERR Allows a single bit to be checked to determine if a receiver error has occurred. 0x0: No errors have occurred. 0x1: An error has occurred.	RW	0
7	RDMAERR	Receive DMA error flag. RDMAERR is set when the CPU or DMA reads more serializers through the DMA port in a given time slot than were programmed as receivers. This bit is cleared by writing a 1 to this bit. Writing a 0 to this bit has no effect. 0x0: Receive DMA error did not occur. 0x1: Receive DMA error did occur.	RW	0
6	RSTAFRM	Receive start of frame flag. This bit is cleared by writing a 1 to this bit. Writing a 0 to this bit has no effect. 0x0: No new receive frame sync (AFSR) is detected. 0x1: A new receive frame sync (AFSR) is detected.	RW	0
5	RDATA	Receive data ready flag. This bit is cleared by writing a 1 to this bit. Writing a 0 to this bit has no effect. 0x0: No new data in RBUF. 0x1: Data is transferred from XRSR to RBUF and ready to be serviced by the CPUs or DMA. When RDATA is set, it always causes a DMA event (AREVT).	RW	0

Copyright © 2025 Texas Instruments Incorporated

Bits	Field Name	Description	Type	Reset
4	RLAST	Receive last slot flag. RLAST is set along with RDATA, if the current slot is the last slot in a frame. This bit is cleared by writing a 1 to this bit. Writing a 0 to this bit has no effect. 0x0: Current slot is not the last slot in a frame. 0x1: Current slot is the last slot in a frame. RDATA is also set.	RW	0
3	RTDMSLOT	Returns the LSB of RSLOT. Allows a single read of MCASP_RXSTAT to determine whether the current TDM time slot is even or odd. 0x0: Current TDM time slot is odd. 0x1: Current TDM time slot is even.	RW	0
2	RCKFAIL	Receive clock failure flag. RCKFAIL is set when the receive clock failure detection circuit reports an error. This bit is cleared by writing a 1 to this bit. Writing a 0 to this bit has no effect. 0x0: Receive clock failure did not occur. 0x1: Receive clock failure did occur.	RW	0
1	RSYNCERR	Unexpected receive frame sync flag. RSYNCERR is set when a new receive frame sync (AFSR) occurs before it is expected. This bit is cleared by writing a 1 to this bit. Writing a 0 to this bit has no effect. 0x0: Unexpected receive frame sync did not occur. 0x1: Unexpected receive frame sync did occur.	RW	0
0	ROVRN	Receiver overrun flag. ROVRN is set when the receive serializer is instructed to transfer data from XRSR to RBUF, but the former data in RBUF has not yet been read by the CPU or DMA. This bit is cleared by writing a 1 to this bit. Writing a 0 to this bit has no effect. 0x0: Receiver overrun did not occur. 0x1: Receiver overrun did occur.	RW	0

Table 11-1392. MCASP_RSLOT

Address Offset	0x0000 0084		
Physical Address	0x051E 0084 0x0520 0084 0x0522 0084	**Instance**	MCASP1_CFG_PER2_L4 MCASP2_CFG_PER2_L4 MCASP3_CFG_PER2_L4
Description	The current receive TDM time slot register (MCASP_RXTDMSLOT) indicates the current time slot for the receive data frame.		
Type	R		

31	30	29	28	27	26	25	24	23	22	21	20	19	18	17	16	15	14	13	12	11	10	9	8	7	6	5	4	3	2	1	0
RESERVED																								RSLOTCNT							

Bits	Field Name	Description	Type	Reset
31:9	RESERVED		R	0x00 0000
8:0	RSLOTCNT	0x0 - 0x17F: Current receive time slot count. Legal values: 0 to 383 (17Fh). TDM function is not supported for > 32 time slots. However, TDM time slot counter may count to 383 when used to receive a DIR block (transferred over TDM format).	R	0x000

Table 11-1393. MCASP_RCLKCHK

Address Offset	0x0000 0088

Copyright © 2025 Texas Instruments Incorporated

Table 11-1393. MCASP_RCLKCHK (continued)

Physical Address	0x051E 0088 0x0520 0088 0x0522 0088	**Instance**	MCASP1_CFG_PER2_L4 MCASP2_CFG_PER2_L4 MCASP3_CFG_PER2_L4
Description	The receive clock check control register (RCLKCHK) configures the receive clock failure detection circuit.		
Type	RW		

31	30	29	28	27	26	25	24	23	22	21	20	19	18	17	16	15	14	13	12	11	10	9	8	7	6	5	4	3	2	1	0
RCNT								RMAX								RMIN								RESERVED				RPS			

Bits	Field Name	Description	Type	Reset
31:24	RCNT	0x0 - 0xFF: Receive clock count value (from previous measurement). The clock circuit continually counts the number of interface clocks for every 32 receive high-frequency master clock (AHCLKR) signals, and stores the count in RCNT until the next measurement is taken.	R	0x00
23:16	RMAX	0x00-0xFF: Receive clock maximum boundary. This 8-bit unsigned value sets the maximum allowed boundary for the clock check counter after 32 receive high-frequency master clock (AHCLKR) signals have been received. If the current counter value is greater than RMAX after counting 32 AHCLKR signals, RCKFAIL in MCASP_RXSTAT is set. The comparison is performed using unsigned arithmetic.	RW	0x00
15:8	RMIN	0x00 - 0xFF: Receive clock minimum boundary. This 8-bit unsigned value sets the minimum allowed boundary for the clock check counter after 32 receive high-frequency master clock (AHCLKR) signals have been received. If RCNT is less than RMIN after counting 32 AHCLKR signals, RCKFAIL in RSTAT is set. The comparison is performed using unsigned arithmetic.	RW	0x00
7:4	RESERVED		RW	0x0
3:0	RPS	Receive clock check prescaler value. 0x0: McASP interface clock divided by 1 0x1: McASP interface clock divided by 2 0x2: McASP interface clock divided by 4 0x3: McASP interface clock divided by 8 0x4: McASP interface clock divided by 16 0x5: McASP interface clock divided by 32 0x6: McASP interface clock divided by 64 0x7: McASP interface clock divided by 128 0x8: McASP interface clock divided by 256 0x9 - 0xF: Reserved	RW	0x0

Table 11-1394. MCASP_PIDTCTL

Address Offset	0x0000 008C		
Physical Address	0x051E 008C 0x0520 008C 0x0522 008C	**Instance**	MCASP1_CFG_PER2_L4 MCASP2_CFG_PER2_L4 MCASP3_CFG_PER2_L4
Description	Receiver DMA event control register. Also known as REVTCTL.		
Type	RW		

31	30	29	28	27	26	25	24	23	22	21	20	19	18	17	16	15	14	13	12	11	10	9	8	7	6	5	4	3	2	1	0

Copyright © 2025 Texas Instruments Incorporated

RESERVED	RDATDMA

Bits	Field Name	Description	Type	Reset
31:1	RESERVED	Reserved	RW	0x0000 0000
0	RDATDMA	Receive data DMA request enable bit. 0x0: The receive data DMA request is enabled. 0x1: The receive data DMA request is disabled.	RW	0

Table 11-1395. MCASP_XGBLCTL

Address Offset	0x0000 00A0		
Physical Address	0x051E 00A0 0x0520 00A0	**Instance**	MCASP1_CFG_PER2_L4 MCASP2_CFG_PER2_L4 MCASP3_CFG_PER2_L4
Description	Alias of GBLCTL. When writing to this register, only the TRANSMIT bits of GBLCTL are affected (This means GBLCTL bits 8,9,10,11,12.). Reads return GBLCTL.		
Type	RW		

31	30	29	28	27	26	25	24	23	22	21	20	19	18	17	16	15	14	13	12	11	10	9	8	7	6	5	4	3	2	1	0
RESERVED																			XFRST	XSMRST	XSRCLR	XHCLKRST	XCLKRST	RESERVED			RFRST	RSMRST	RSRCLKR	RHCLKRST	RCLKRST

Bits	Field Name	Description	Type	Reset
31:13	RESERVED		RW	0x0
12	XFRST	Frame sync generator reset 0x0: RESET 0x1: ACTIVE	RW	0x0
11	XSMRST	XMT state machine reset 0x0: RESET 0x1: ACTIVE	RW	0x0
10	XSRCLR	XMT serializer clear 0x0: CLEAR 0x1: ACTIVE	RW	0x0
9	XHCLKRST	XMT High Freq. clk Divider 0x0: RESET 0x1: ACTIVE	RW	0x0
8	XCLKRST	XMT clock divder reset 0x0: RESET 0x1: ACTIVE	RW	0x0
7:5	RESERVED		RW	0x0
4	RFRST	Frame sync generator reset 0x0: RESET 0x1: ACTIVE	R	0x0
3	RSMRST	RCV state machine reset 0x0: RESET 0x1: ACTIVE	R	0x0

Copyright © 2025 Texas Instruments Incorporated

Bits	Field Name	Description	Type	Reset
2	RSRCLKR	RCV serializer clear 0x0: CLEAR 0x1: ACTIVE	R	0x0
1	RHCLKRST	RCV High Freq. clk Divider 0x0: RESET 0x1: ACTIVE	R	0x0
0	RCLKRST	RCV clock divder reset 0x0: RESET 0x1: ACTIVE	R	0x0

Table 11-1396. MCASP_XMASK

Address Offset	0x0000 00A4		
Physical Address	0x051E 00A4 0x0520 00A4 0x0522 00A4	**Instance**	MCASP1_CFG_PER2_L4 MCASP2_CFG_PER2_L4 MCASP3_CFG_PER2_L4
Description	Transmit format unit bit mask register - Determines which bits of the transmitted data are masked off before being shifted out the McASP		
Type	RW		

31	30	29	28	27	26	25	24	23	22	21	20	19	18	17	16	15	14	13	12	11	10	9	8	7	6	5	4	3	2	1	0
XMASK[31:0]																															

Bits	Field Name	Description	Type	Reset
31:0	XMASK[31:0]	Transmit data mask enable bit 0x0: The corresponding bit of transmit data is masked out and then transmitted out the McASP in place of the original bit. 0x1: The corresponding bit of transmit data is transmitted out the McASP.	RW	0

Table 11-1397. MCASP_XFMT

Address Offset	0x0000 00A8		
Physical Address	0x051E 00A8 0x0520 00A8 0x0522 00A8	**Instance**	MCASP1_CFG_PER2_L4 MCASP2_CFG_PER2_L4 MCASP3_CFG_PER2_L4
Description	Transmit bitstream format register - configures the transmit data format		
Type	RW		

31	30	29	28	27	26	25	24	23	22	21	20	19	18	17	16	15	14	13	12	11	10	9	8	7	6	5	4	3	2	1	0
RESERVED														XDATDLY		XRVRS	XPAD			XPBIT				XSSZ				XBUSEL	XROT		

Bits	Field Name	Description	Type	Reset
31:18	RESERVED	Reserved	RW	0x0000
17:16	XDATDLY	Transmit sync bit delay 0x0: 0 bit delay - The first transmit data bit, on the AXR[n], occurs in the same ACLKX cycle as the transmit frame sync (AFSX). 0x1: 1-bit delay. The first transmit data bit, AXR[n], occurs one ACLKX cycle after the transmit frame sync (AFSX). 0x2: 2-bit delay. The first transmit data bit, AXR[n], occurs two ACLKX cycles after the transmit frame sync (AFSX). 0x3: Reserved	RW	0x0

Copyright © 2025 Texas Instruments Incorporated

Bits	Field Name	Description	Type	Reset
15	XRVRS	Transmit serial bitstream order 0x0: Bitstream is LSB first. No bit reversal is performed in transmit format unit. 0x1: Bitstream is MSB first. Bit reversal is performed in transmit format bit reverse unit.	RW	0x0
14:13	XPAD	Pad value for extra bits in slot not belonging to word defined by XMASK. This field only applies to bits when XMASK[n] = 0. 0x0: Pad extra bits with 0. 0x1: Pad extra bits with 1. 0x2: Pad extra bits with one of the bits from the word as specified by XPBIT bits. 0x3: Reserved	RW	0x00
12:8	XPBIT	XPBIT value determines which bit (as written by the CPU or DMA to XBUF[n]) is used to pad the extra bits before shifting. This field only applies when XPAD = 0x2. 0x0: Pad with bit 0 value. 0x1 - 0x1F: Pad with bit 1 to bit 31 value.	RW	0x0
7:4	XSSZ	Transmit slot size 0x0 - 0x2: Reserved 0x3: Slot size is 8 bits 0x4: Reserved 0x5: Slot size is 12 bits 0x6: Reserved 0x7: Slot size is 16 bits 0x8: Reserved 0x9: Slot size is 20 bits 0xA: Reserved 0xB: Slot size is 24 bits 0xC: Reserved 0xD: Slot size is 28 bits 0xE: Reserved 0xF: Slot size is 32 bits.	RW	0x0
3	XBUSEL	Selects whether writes to the serializer buffer XBUF[n] originate from the peripheral configuration CFG port or the DATA port. 0x0: Writes to XBUF[n] originate from the DATA port. Writes to XBUF[n] from the peripheral configuration port are ignored with no effect on the McASP. 0x1: Writes to XBUF[n] originate from the peripheral configuration port - CFG port. Writes to XBUF[n] from the DATA port are ignored with no effect on the McASP.	RW	0
2:0	XROT	Right-rotation value for transmit rotate right format unit 0x0: Rotate right by 0 (no rotation). 0x1: Rotate right by 4 bit positions. 0x2: Rotate right by 8 bit positions. 0x3: Rotate right by 12 bit positions. 0x4: Rotate right by 16 bit positions. 0x5: Rotate right by 20 bit positions. 0x6: Rotate right by 24 bit positions. 0x7: Rotate right by 28 bit positions.	RW	0x0

Copyright © 2025 Texas Instruments Incorporated

Table 11-1398. MCASP_AFSXCTL

Address Offset	0x0000 00AC		
Physical Address	0x051E 00AC 0x0520 00AC 0x0522 00AC	**Instance**	MCASP1_CFG_PER2_L4 MCASP2_CFG_PER2_L4 MCASP3_CFG_PER2_L4
Description	Transmit frame-sync control register - configures the transmit frame sync (AFSX).		
Type	RW		

31	30	29	28	27	26	25	24	23	22	21	20	19	18	17	16	15	14	13	12	11	10	9	8	7	6	5	4	3	2	1	0
RESERVED																XMOD								RESERVED			FXWID	RESERVED		FSXM	FSXP

Bits	Field Name	Description	Type	Reset
31:16	RESERVED	Reserved	RW	0x0000
15:7	XMOD	Transmit frame-sync mode select bits 0x0: Burst mode 0x1: Reserved 0x2: 2-slot TDM mode (I2S transmit mode) 0x3 - 0x20: 3-slot TDM to 32-slot TDM mode 0x21 - 0x17F: Reserved 0x180: 384-slot DIT mode All other: Reserved	RW	0x000
6:5	RESERVED	Reserved	RW	0x0
4	FXWID	The transmit frame-sync width select bit indicates the width of the transmit frame sync (AFSX) during its active period. 0x0: Single bit 0x1: Single word. Single word is not supported if XMOD is set to burst mode.	RW	0
3:2	RESERVED	Reserved	RW	0x0
1	FSXM	Transmit frame-sync generation select bit 0x0: Externally-generated transmit frame 0x1: Internally-generated transmit frame sync	RW	0
0	FSXP	Transmit frame-sync polarity select bit 0x0: Rising Edge - A rising edge on transmit frame sync (AFSX) indicates the beginning of a frame. 0x1: Falling Edge - A falling edge on transmit frame sync (AFSX) indicates the beginning of a frame.	RW	0

Table 11-1399. MCASP_ACLKXCTL

Address Offset	0x0000 00B0		
Physical Address	0x051E 00B0 0x0520 00B0 0x0522 00B0	**Instance**	MCASP1_CFG_PER2_L4 MCASP2_CFG_PER2_L4 MCASP3_CFG_PER2_L4
Description	Transmit clock control register - Configures the transmit bit clock (ACLKX) and the transmit clock generator.		
Type	RW		

31	30	29	28	27	26	25	24	23	22	21	20	19	18	17	16	15	14	13	12	11	10	9	8	7	6	5	4	3	2	1	0
RESERVED											BUSY	DIVBUSY	ADJBUSY	CLKXADJ		RESERVED								CLKXP	ASYNC	CLKXM	CLKXDIV				

Bits	Field Name	Description	Type	Reset
31:21	RESERVED	Reserved	RW	0x00

Copyright © 2025 Texas Instruments Incorporated

Bits	Field Name	Description	Type	Reset
20	BUSY	Status: logical OR of DIVBUSY, ADJBUSY. Not supported. 0x0: NOTBUSY 0x1: BUSY	RW	0x0
19	DIVBUSY	Status: divide ratio change in progress? Not supported. 0x0: NOTBUSY 0x1: BUSY	RW	0x0
18	ADJBUSY	Status: one-shot adjustment in progress? Not supported. 0x0: NOTBUSY 0x1: BUSY	RW	0x0
17:16	CLKXADJ	CLKXDIV one-shot adjustment. Not supported. Bit field must always be written as 0x0. If CLKXDIV is set such that there are “m” input clocks per one output clock, then for one output cycle: 00 = (m+0) input clocks per output clock, i.e. no adjustment 01 = (m-1) input clocks per output clock 10 = (m+1) input clocks per output clock 11 = (m+0) input clocks per output clock, i.e. no adjustment NOTE: writes to these bits are ineffective if CLKADJEN:ENABLE bit is set to 0b. These bits are ALWAYS read back as zero.	W	0x0
15:8	RESERVED		RW	0x0
7	CLKXP	Transmit bitstream clock polarity select bit. 0x0: Rising edge. External receiver samples data on the falling edge of the serial clock, so the transmitter must shift data out on the rising edge of the serial clock. 0x1: Falling edge. External receiver samples data on the rising edge of the serial clock, so the transmitter must shift data out on the falling edge of the serial clock.	RW	0
6	ASYNC	Transmit operation asynchronous enable bit 0x0: Synchronous. Transmit clock and frame sync provides the source for both the transmit and receive sections. Note that in this mode, the receive bit clock is an inverted version of the transmit bit clock. 0x1: Asynchronous. Separate clock and frame sync used by transmit and receive sections.	RW	1
5	CLKXM	Transmit bit clock source bit 0x0: External transmit clock source from ACLKX pin. 0x1: Internal (output of divider)	RW	1
4:0	CLKXDIV	Transmit bit clock divide ratio bits, determine the divide-down ratio from AHCLKX to ACLKX. 0x0: Divide-by-1 0x1: Divide-by-2 0x2 to 0x1F: Divide-by-3 to divide-by-32	RW	0x00

Table 11-1400. MCASP_AHCLKXCTL

Address Offset	0x0000 00B4		
Physical Address	0x051E 00B4 0x0520 00B4 0x0522 00B4	**Instance**	MCASP1_CFG_PER2_L4 MCASP2_CFG_PER2_L4 MCASP3_CFG_PER2_L4
Description	High-frequency transmit clock control register - Configures the transmit high-frequency master clock (AHCLKX) and the transmit clock generator.		
Type	RW		

31	30	29	28	27	26	25	24	23	22	21	20	19	18	17	16	15	14	13	12	11	10	9	8	7	6	5	4	3	2	1	0

Copyright © 2025 Texas Instruments Incorporated

RESERVED	BUSY	DIVBUSY	ADJBUSY	HCLKXADJ	HCLKXM	HCLKXP	RESERVED	HCLKXDIV

Bits	Field Name	Description	Type	Reset
31:21	RESERVED	Reserved	RW	0x000
20	BUSY	Status: logical OR of DIVBUSY, ADJBUSY. Not supported. 0x0: NOTBUSY 0x1: BUSY	RW	0x0
19	DIVBUSY	Status: divide ratio change in progress? Not supported. 0x0: NOTBUSY 0x1: BUSY	RW	0x0
18	ADJBUSY	Status: one-shot adjustment in progress? Not supported. 0x0: NOTBUSY 0x1: BUSY	RW	0x0
17:16	HCLKXADJ	HCLKXDIV one-shot adjustment. Not supported. Bit field must always be written as 0x0. If HCLKXDIV is set such that there are “m” input clocks per one output clock, then for one output cycle: 00 = (m+0) input clocks per output clock, i.e. no adjustment 01 = (m-1) input clocks per output clock 10 = (m+1) input clocks per output clock 11 = (m+0) input clocks per output clock, i.e. no adjustment NOTE: writes to these bits are ineffective if CLKADJEN:ENABLE bit is set to 0b. These bits are ALWAYS read back as zero.	W	0x0
15	HCLKXM	Transmit high-frequency clock source bit 0x0: External transmit high-frequency clock source from AHCLKX pin. 0x1: Internal transmit high-frequency clock source from output of programmable high clock divider	RW	1
14	HCLKXP	Transmit bitstream high-frequency clock polarity select bit. 0x0: Not inverted. AHCLKX is not inverted before programmable bit clock divider. 0x1: Inverted. AHCLKX is inverted before programmable bit clock divider.	RW	0
13:12	RESERVED	Reserved	RW	0x0
11:0	HCLKXDIV	Transmit high-frequency clock divide ratio bits determine the divide-down ratio from AUXCLK to AHCLKX. 0x0: Divide-by-1 0x1: Divide-by-2 0x2 to 0xFFF: Divide-by-3 to divide-by-4096	RW	0x000

Table 11-1401. MCASP_XTDM

Address Offset	0x0000 00B8		
Physical Address	0x051E 00B8 0x0520 00B8 0x0522 00B8	**Instance**	MCASP1_CFG_PER2_L4 MCASP2_CFG_PER2_L4 MCASP3_CFG_PER2_L4
Description	Transmit TDM slot 0-31 register - TDM time slot counter range is to 384 slots (to support SPDIF blocks of 384 subframes).		
Type	RW		

31	30	29	28	27	26	25	24	23	22	21	20	19	18	17	16	15	14	13	12	11	10	9	8	7	6	5	4	3	2	1	0
XTDMS[31:0]																															

Copyright © 2025 Texas Instruments Incorporated

Bits	Field Name	Description	Type	Reset
31:0	XTDMS[31:0]	Transmitter mode during TDM time slot n (n = 0..31) 0x0: Transmit TDM time slot n is inactive. The transmit serializer does not shift out data during this slot. 0x1: The transmit TDM time slot n is active. The transmit serializer shifts out data during this slot according to the serializer control registers - MCASP_XRSRCTLn.	RW	0

Table 11-1402. MCASP_XINTCTL

Address Offset	0x0000 00BC		
Physical Address	0x051E 00BC 0x0520 00BC 0x0522 00BC	**Instance**	MCASP1_CFG_PER2_L4 MCASP2_CFG_PER2_L4 MCASP3_CFG_PER2_L4
Description	Transmitter Interrupt control register - controls generation of the McASP transmit interrupt (XINT). When the register bit(s) is set to 1, the occurrence of the enabled McASP condition(s) generates XINT.		
Type	RW		

31	30	29	28	27	26	25	24	23	22	21	20	19	18	17	16	15	14	13	12	11	10	9	8	7	6	5	4	3	2	1	0
RESERVED																								XSTAFRM	RESERVED	XDATA	XLAST	XDMAERR	XCKFAIL	XSYNCERR	XUNDRN

Bits	Field Name	Description	Type	Reset
31:8	RESERVED	Reserved	RW	0x000000
7	XSTAFRM	Transmit start of frame interrupt enable bit 0x0: Interrupt is disabled. A transmit-start-of-frame interrupt does not generate a McASP transmit interrupt (XINT). 0x1: Interrupt is enabled. A transmit-start-of-frame interrupt generates a McASP transmit interrupt (XINT).	RW	0
6	RESERVED	Reserved	RW	0
5	XDATA	Transmit data-ready interrupt enable bit 0x0: Interrupt is disabled. A transmit data-ready interrupt does not generate a McASP transmit interrupt (XINT). 0x1: Interrupt is enabled. A transmit data-ready interrupt generates a McASP transmit interrupt (XINT).	RW	0
4	XLAST	Transmit last slot interrupt enable bit 0x0: Interrupt is disabled. A transmit-last-slot interrupt does not generate a McASP transmit interrupt (XINT). 0x1: Interrupt is enabled. A transmit-last-slot interrupt generates a McASP transmit interrupt (XINT).	RW	0
3	XDMAERR	Transmit DMA error interrupt enable bit 0x0: Interrupt is disabled. A transmit DMA error interrupt does not generate a McASP transmit interrupt (XINT). 0x1: Interrupt is enabled. A transmit DMA error interrupt generates a McASP transmit interrupt (XINT).	RW	0
2	XCKFAIL	Transmit clock failure interrupt enable bit 0x0: Interrupt is disabled. A transmit clock failure interrupt does not generate a McASP transmit interrupt (XINT). 0x1: Interrupt is enabled. A transmit clock failure interrupt generates a McASP transmit interrupt (XINT).	RW	0

Copyright © 2025 Texas Instruments Incorporated

Bits	Field Name	Description	Type	Reset
1	XSYNCERR	Unexpected transmit frame-sync interrupt enable bit 0x0: Interrupt is disabled. An unexpected transmit frame-sync interrupt does not generate a McASP transmit interrupt (XINT). 0x1: Interrupt is enabled. An unexpected transmit frame-sync interrupt generates a McASP transmit interrupt (XINT).	RW	0
0	XUNDRN	Transmitter underrun interrupt enable bit 0x0: Interrupt is disabled. A transmitter underrun interrupt does not generate a McASP transmit interrupt (XINT). 0x1: Interrupt is enabled. A transmitter underrun interrupt generates a McASP transmit interrupt (XINT).	RW	0

Table 11-1403. MCASP_XSTAT

Address Offset	0x0000 00C0		
Physical Address	0x051E 00C0 0x0520 00C0 0x0522 00C0	**Instance**	MCASP1_CFG_PER2_L4 MCASP2_CFG_PER2_L4 MCASP3_CFG_PER2_L4
Description	Transmitter status register - If the McASP logic attempts to set an interrupt flag in the same cycle that the CPU writes to the flag to clear it, the McASP logic has priority and the flag remains set. This also causes the generation of a new interrupt request.		
Type	RW		

31	30	29	28	27	26	25	24	23	22	21	20	19	18	17	16	15	14	13	12	11	10	9	8	7	6	5	4	3	2	1	0
RESERVED																							XERR	XDMAERR	XSTAFRM	XDATA	XLAST	XTDMSLOT	XCKFAIL	XSYNCERR	XUNDRN

Bits	Field Name	Description	Type	Reset
31:9	RESERVED	Reserved	RW	0x000000
8	XERR	XERR bit always returns a logic-OR of: XUNDRN | XSYNCERR | XCKFAIL | XDMAERR. Allows a single bit to be checked to determine if a transmitter error interrupt has occurred. 0x0: No errors have occurred. 0x1: An error has occurred.	RW	0
7	XDMAERR	Transmit DMA error flag. XDMAERR is set when the CPU or DMA writes more words to the DATA port of the McASP in a given time slot than it should. Causes a transmit interrupt (XINT) if this bit and XDMAERR in MCASP_EVTCTLX are set. This bit is cleared by writing a 1 to it. Writing a 0 has no effect. 0x0: Transmit DMA error did not occur. 0x1: Transmit DMA error occurred.	RW	0
6	XSTAFRM	Transmit start of frame flag. Causes a transmit interrupt (XINT) if this bit and XSTAFRM in MCASP_EVTCTLX are set. This bit is cleared by writing a 1 to it. Writing a 0 has no effect. 0x0: No new transmit frame sync (AFSX) is detected. 0x1: A new transmit frame sync (AFSX) is detected.	RW	0
5	XDATA	Transmit data ready flag. Causes a transmit interrupt (XINT) if this bit and XDATA in MCASP_EVTCTLX are set. This bit is cleared by writing a 1 to iit. Writing a 0 has no effect 0x0: XBUF[n] is written and is full 0x1: Data is copied from XBUF[n] to XRSR[n]. XBUF[n] is empty and ready to be written. XDATA is also set when the transmit serializers are taken out of reset. When XDATA is set, it always causes a DMA event (AXEVT).	RW	0

Copyright © 2025 Texas Instruments Incorporated

Bits	Field Name	Description	Type	Reset
4	XLAST	Transmit last slot flag. XLAST, along with XDATA, are set if the current slot is the last slot in a frame. Causes a transmit interrupt (XINT) if this bit and XLAST in MCASP_EVTCTLX are set. This bit is cleared by writing a 1 to iit. Writing a 0 has no effect. 0x0: Current slot is not the last slot in a frame. 0x1: Current slot is the last slot in a frame. XDATA is also set.	RW	0
3	XTDMSLOT	Returns the LSB of XSLOT. Allows a single read of XSTAT to determine whether the current TDM time slot is even or odd. read 0x0: Current TDM time slot is odd. read 0x1: Current TDM time slot is even.	R	0
2	XCKFAIL	Transmit clock failure flag. XCKFAIL is set when the transmit clock failure detection circuit reports an error. Causes a transmit interrupt (XINT) if this bit and XCKFAIL in MCASP_EVTCTLX are set. This bit is cleared by writing a 1 to iit. Writing a 0 has no effect. 0x0: Transmit clock failure did not occur. 0x1: Transmit clock failure occurred	RW	0
1	XSYNCERR	Unexpected transmit frame-sync flag. XSYNCERR is set when a new transmit frame sync (AFSX) occurs before it is expected. Causes a transmit interrupt (XINT) if this bit and XSYNCERR in MCASP_EVTCTLX are set. This bit is cleared by writing a 1 to iit. Writing a 0 has no effect. 0x0: Unexpected transmit frame sync did not occur 0x1: Unexpected transmit frame sync occurred.	RW	0
0	XUNDRN	Transmitter underrun flag. XUNDRN is set when the transmit serializer is instructed to transfer data from XBUF[n] to XRSR[n], but XBUF[n] has not yet been serviced with new data since the last transfer. Causes a transmit interrupt (XINT) if this bit and XUNDRN in MCASP_EVTCTLX are set. This bit is cleared by writing a 1 to iit. Writing a 0 has no effect. 0x0: Transmitter underrun did not occur 0x1: Transmitter underrun occurred.	RW	0

Table 11-1404. MCASP_XSLOT

Address Offset	0x0000 00C4		
Physical Address	0x051E 00C4 0x0520 00C4 0x0522 00C4	**Instance**	MCASP1_CFG_PER2_L4 MCASP2_CFG_PER2_L4 MCASP3_CFG_PER2_L4
Description	Current transmit TDM time slot register		
Type	R		

31	30	29	28	27	26	25	24	23	22	21	20	19	18	17	16	15	14	13	12	11	10	9	8	7	6	5	4	3	2	1	0
RESERVED																								XSLOTCNT							

Bits	Field Name	Description	Type	Reset
31:9	RESERVED	Reserved	R	0x000000
8:0	XSLOTCNT	Current transmit time slot count. the value of this register is 0b0101111111 (0x17f) during reset and 0 after reset.	R	0x000

Table 11-1405. MCASP_XCLKCHK

Address Offset	0x0000 00C8		
Physical Address	0x051E 00C8 0x0520 00C8 0x0522 00C8	**Instance**	MCASP1_CFG_PER2_L4 MCASP2_CFG_PER2_L4 MCASP3_CFG_PER2_L4
Description	Transmit clock check control register - configures the transmit clock failure detection circuit.		
Type	RW		

Copyright © 2025 Texas Instruments Incorporated

31	30	29	28	27	26	25	24	23	22	21	20	19	18	17	16	15	14	13	12	11	10	9	8	7	6	5	4	3	2	1	0
XCNT								XMAX								XMIN								RESERVED				XPS			

Bits	Field Name	Description	Type	Reset
31:24	XCNT	Transmit clock count value (from previous measurement). The clock circuit continually counts the number of interface clocks for every 32 transmit high-frequency master clock (AHCLKX) signals, and stores the count in XCNT until the next measurement is taken	R	0x00
23:16	XMAX	0x0 to 0xFF: Transmit clock maximum boundary. This 8-bit unsigned value sets the maximum allowed boundary for the clock check counter after 32 transmit high-frequency master clock (AHCLKX) signals have been received. If the current counter value is greater than XMAX after counting 32 AHCLKX signals, XCKFAIL in XSTAT is set. The comparison is performed using unsigned arithmetic.	RW	0x00
15:8	XMIN	0x0 to 0xFF: Transmit clock minimum boundary. This 8-bit unsigned value sets the minimum allowed boundary for the clock check counter after 32 transmit high-frequency master clock (AHCLKX) signals have been received. If XCNT is less than XMIN after counting 32 AHCLKX signals, XCKFAIL in XSTAT is set. The comparison is performed using unsigned arithmetic.	RW	0x00
7:4	RESERVED	Reserved	RW	0x0
3:0	XPS	Transmit clock check prescaler value 0x0: McASP interface clock divided by 1 0x1: McASP interface clock divided by 2 0x2: McASP interface clock divided by 4 0x3: McASP interface clock divided by 8 0x4: McASP interface clock divided by 16 0x5: McASP interface clock divided by 32 0x6: McASP interface clock divided by 64 0x7: McASP interface clock divided by 128 0x8: McASP interface clock divided by 256 0x9 to 0xF: Reserved	RW	0x0

Table 11-1406. MCASP_XEVTCTL

Address Offset	0x0000 00CC		
Physical Address	0x051E 00CC 0x0520 00CC 0x0522 00CC	**Instance**	MCASP1_CFG_PER2_L4 MCASP2_CFG_PER2_L4 MCASP3_CFG_PER2_L4
Description	Transmitter DMA event control register		
Type	RW		

31	30	29	28	27	26	25	24	23	22	21	20	19	18	17	16	15	14	13	12	11	10	9	8	7	6	5	4	3	2	1	0
RESERVED																															XDATDMA

Bits	Field Name	Description	Type	Reset
31:1	RESERVED	Reserved	RW	0x0000 0000
0	XDATDMA	Transmit data DMA request enable bit. 0x0: The transmit data DMA request is enabled. 0x1: The transmit data DMA request is disabled.	RW	0

Table 11-1407. MCASP_DITCSRAi

Address Offset	0x0000 0100 + (0x4*i)	**Index**	i = 0 to 5
Physical Address	0x051E 0100 + (0x04*i) 0x0520 0100 + (0x04*i) 0x0522 0100 + (0x04*i)	**Instance**	MCASP1_CFG_PER2_L4 MCASP2_CFG_PER2_L4 MCASP3_CFG_PER2_L4

Copyright © 2025 Texas Instruments Incorporated

Table 11-1407. MCASP_DITCSRAi (continued)

Description	DIT left channel status register - All six 32-bit registers (i = 0 to 5) can store 192 bits of channel status data for a complete block of transmission. The DIT reuses the same data for the next block. Make sure to update the register file before a different set of data needs to be sent.
Type	RW

31	30	29	28	27	26	25	24	23	22	21	20	19	18	17	16	15	14	13	12	11	10	9	8	7	6	5	4	3	2	1	0
DITCSRAi																															

Bits	Field Name	Description	Type	Reset
31:0	DITCSRAi	Left (even TDM slot) channel status	RW	0x0000 0000

Table 11-1408. MCASP_DITCSRBi

Address Offset	0x0000 0118+ (0x4*i)	**Index**	i = 0 to 5
Physical Address	0x051E 0118 + (0x04*i) 0x0520 0118 + (0x04*i) 0x0522 0118 + (0x04*i)	**Instance**	MCASP1_CFG_PER2_L4 MCASP2_CFG_PER2_L4 MCASP3_CFG_PER2_L4
Description	DIT right channel status register - All six 32-bit registers (i = 0 to 5) can store 192 bits of channel status data for a complete block of transmission. The DIT reuses the same data for the next block. Make sure to update the register file before a different set of data needs to be sent.		
Type	RW		

31	30	29	28	27	26	25	24	23	22	21	20	19	18	17	16	15	14	13	12	11	10	9	8	7	6	5	4	3	2	1	0
DITCSRBi																															

Bits	Field Name	Description	Type	Reset
31:0	DITCSRBi	Right (odd TDM slot) channel status	RW	0x0000 0000

Table 11-1409. MCASP_DITUDRAi

Address Offset	0x0000 0130 + (0x4*i)	**Index**	i = 0 to 5
Physical Address	0x051E 0130 + (0x04*i) 0x0520 0130 + (0x04*i) 0x0522 0130 + (0x04*i)	**Instance**	MCASP1_CFG_PER2_L4 MCASP2_CFG_PER2_L4 MCASP3_CFG_PER2_L4
Description	DIT left channel user data register - provides the user data of each left channel (even TDM time slot). All six 32-bit registers (i = 0 to 5) can store 192 bits of user data for a complete block of transmission. The DIT reuses the same data for the next block. Make sure to update the register before a different set of data needs to be sent.		
Type	RW		

31	30	29	28	27	26	25	24	23	22	21	20	19	18	17	16	15	14	13	12	11	10	9	8	7	6	5	4	3	2	1	0
DITUDRAi																															

Bits	Field Name	Description	Type	Reset
31:0	DITUDRAi	Left (even TDM slot) user data	RW	0x0000 0000

Table 11-1410. MCASP_DITUDRBi

Address Offset	0x0000 0148+ (0x4*i)	**Index**	i = 0 to 5
Physical Address	0x051E 0148 + (0x04*i) 0x0520 0148 + (0x04*i) 0x0522 0148 + (0x04*i)	**Instance**	MCASP1_CFG_PER2_L4 MCASP2_CFG_PER2_L4 MCASP3_CFG_PER2_L4
Description	DIT right user data register - provides the user data of each right channel (odd TDM time slot). All six 32-bit registers (i = 0 to 5) can store 192 bits of user data for a complete block of transmission. The DIT reuses the same data for the next block. Make sure to update the register before a different set of data needs to be sent.		
Type	RW		

Copyright © 2025 Texas Instruments Incorporated

31	30	29	28	27	26	25	24	23	22	21	20	19	18	17	16	15	14	13	12	11	10	9	8	7	6	5	4	3	2	1	0
DITUDRBi																															

Bits	Field Name	Description	Type	Reset
31:0	DITUDRBi	Right (odd TDM slot) user data	RW	0x0000 0000

Table 11-1411. MCASP_SRCTLn

Address Offset	0x0000 0180 + (0x4*n)	**Index**	n = 0 to 15
Physical Address	0x051E 0180 + (0x04*n) 0x0520 0180 + (0x04*n) 0x0522 0180 + (0x04*n)	**Instance**	MCASP1_CFG_PER2_L4 MCASP2_CFG_PER2_L4 MCASP3_CFG_PER2_L4
Description	Serializer n control register.		
Type	RW		

31	30	29	28	27	26	25	24	23	22	21	20	19	18	17	16	15	14	13	12	11	10	9	8	7	6	5	4	3	2	1	0
RESERVED																										RRDY	XRDY	DISMOD		SRMOD	

Bits	Field Name	Description	Type	Reset
31:6	RESERVED	Reserved	RW	0x0000000
5	RRDY	Receive buffer ready bit. RRDY indicates the current receive buffer state. Always reads 0 when programmed as a transmitter or as inactive. If SRMOD bit is set to receive (2h), RRDY switches from 0 to 1 whenever data is transferred from XRSRn to RBUFn. Read 0x0: Receive buffer (MCASP_RXBUFn) is empty. Read 0x1: Receive buffer (MCASP_RXBUFn) contains data and needs to be read before the start of the next time slot or a receiver overrun occurs.	R	0
4	XRDY	Transmit buffer ready bit. XRDY indicates the current transmit buffer state. Always reads 0 when programmed as a receiver or as inactive. If SRMOD bit is set to transmit (1h), XRDY switches from 0 to 1 when XSRCLR in GBLCTL is switched from 0 to 1 to indicate an empty transmitter. XRDY remains set until XSRCLR is forced to 0, data is written to the corresponding transmit buffer, or SRMOD bit is changed to receive (2h) or inactive (0). Read 0x0: The transmit buffer (MCASP_TXBUFn) contains data. Read 0x1: The transmit buffer (MCASP_TXBUFn) is empty and needs to be written before the start of the next time slot or a transmit underrun occurs.	R	0
3:2	DISMOD	Serializer pin drive mode bit. Drive on pin when in inactive TDM slot of transmit mode or when serializer is inactive. This field only applies if the pin is configured as a McASP pin (PFUNC = 0). 0x0: Drive on pin is 3-state. 0x1: Reserved 0x2: Drive on pin is logic low. 0x3: Drive on pin is logic high.	RW	0x0
1:0	SRMOD	Serializer mode bit 0x0:The serializer is inactive 0x1:The serializer is operating in transmit mode. 0x2: The serializer is operating in receive mode. 0x3: Reserved	RW	0x0

Table 11-1412. MCASP_XBUFn

Address Offset	0x0000 0200 + (0x4*n)	**Index**	n = 0 to 15

Copyright © 2025 Texas Instruments Incorporated

Table 11-1412. MCASP_XBUFn (continued)

Physical Address	0x051E 0200 + (0x04*n) 0x0520 0200 + (0x04*n) 0x0522 0200 + (0x04*n)	**Instance**	MCASP1_CFG_PER2_L4 MCASP2_CFG_PER2_L4 MCASP3_CFG_PER2_L4
Description	Transmit buffer n - The transmit buffer for the serializer n holds data from the transmit format unit.		
Type	RW		

31	30	29	28	27	26	25	24	23	22	21	20	19	18	17	16	15	14	13	12	11	10	9	8	7	6	5	4	3	2	1	0
XBUFn																															

Bits	Field Name	Description	Type	Reset
31:0	XBUFn	Transmit buffer n	RW	0x0000 0000

Table 11-1413. MCASP_RBUFn

Address Offset	0x0000 0280 + (0x4*n)	**Index**	n = 0 to 15
Physical Address	0x051E 0280 + (0x04*n) 0x0520 0280 + (0x04*n) 0x0522 0280 + (0x04*n)	**Instance**	MCASP1_CFG_PER2_L4 MCASP2_CFG_PER2_L4 MCASP3_CFG_PER2_L4
Description	Receive buffer n - The receive buffer for the serializer n holds data before the data goes to the receive format unit.		
Type	RW		

31	30	29	28	27	26	25	24	23	22	21	20	19	18	17	16	15	14	13	12	11	10	9	8	7	6	5	4	3	2	1	0
RBUFn																															

Bits	Field Name	Description	Type	Reset
31:0	RBUFn	Receive Buffer n	RW	0x0000 0000

Table 11-1414. MCASP_WFIFOCTL

Address Offset	0x0000 1000		
Physical Address	0x051E 1000 0x0520 1000 0x0522 1000	**Instance**	MCASP1_CFG_PER2_L4 MCASP2_CFG_PER2_L4 MCASP3_CFG_PER2_L4
Description	The WNUMEVT and WNUMDMA values must be set prior to enabling the Write FIFO. If the Write FIFO is to be enabled, it must be enabled prior to taking the McASP out of reset		
Type	RW		

31	30	29	28	27	26	25	24	23	22	21	20	19	18	17	16	15	14	13	12	11	10	9	8	7	6	5	4	3	2	1	0
RESERVED															WENA	WNUMEVT								WNUMDMA							

Bits	Field Name	Description	Type	Reset
31:17	RESERVED1		RW	0x0
16	WENA	Write FIFO enable bit 0x0: EN_1_0x0 - Write FIFO is disabled. The WLVL bit in the Write FIFO status register (WFIFOSTS) is reset to 0 and pointers are initialized. (That is the Write FIFO is flushed) 0x1: EN_2_0x1 - Write FIFO is enabled. If Write FIFO is to be enabled, it must be enabled to taking McASP out of reset	RW	0x0

Copyright © 2025 Texas Instruments Incorporated

Bits	Field Name	Description	Type	Reset
15:8	WNUMEVT	Write word count per DMA event [32 bit]. When the Write FIFO has space for at least WNUMEVT words of data, then an AXEVT (transmit DMA event) is generated to the host/DMA controller. This value should be set to a non-zero integer multiple of the number of serializes enable as transmitters. This value must be set prior to enabling the Write FIFO. 0x00: EN_1_0x0 - 0 Words 0x01: EN_2_0x1 - 1 Word 0x02: EN_3_0x2 - 2 Words 0x03: EN_4_0x3 - 3 to 64 words from 3h to 40h 0x41: EN_5_0x41 - Reserved from 41h to FFh	RW	0x10
7:0	MNUMDMA	Write word count per transfer (32 bit words). Upon a transmit DMA event from the McASP, WNUMDMA words are transferred from the Write FIFO to the McASP. This value must equal the number of serializes used as transmitters. The value must be set prior to enabling the Write FIFO. 0x00: EN_1_0x0 - 0 Words 0x01: EN_2_0x1 - 1 Word 0x02: EN_3_0x2 - 2 Words 0x03: EN_4_0x3 - 3-16 words from 3h to 10h 0x11: EN_5_0x11- Reserved from 11h to FFh	RW	0x04

Table 11-1415. MCASP_WFIFOSTS

Address Offset	0x0000 1004		
Physical Address	0x051E 1004 0x0520 1004 0x0522 1004	**Instance**	MCASP1_CFG_PER2_L4 MCASP2_CFG_PER2_L4 MCASP3_CFG_PER2_L4
Description	Write Level		
Type	RO		

31	30	29	28	27	26	25	24	23	22	21	20	19	18	17	16	15	14	13	12	11	10	9	8	7	6	5	4	3	2	1	0
RESERVED1																								WLVL							

Bits	Field Name	Description	Type	Reset
31:8	RESERVED1		RO	0x0
7:0	WLVL	Number of 32 bit words currently if the Write FIFO Read 0x00: EN_1_0x0 - 0 Words currently in the Write FIFO Read 0x01: EN_2_0x1 - 1 Word currently in Write FIFO Read 0x02: EN_3_0x2 - 2 Words currently in Write FIFO READ 0x03: EN_4_0x3 - 3 to 64 Words currently in Write FIFO from 3h to 40h Read 0x41: EN_5_0x41 - Reserved from 41h to FFh	RO	0x0

Table 11-1416. MCASP_RFIFOCTL

Address Offset	0x0000 1008		
Physical Address	0x051E 1008 0x0520 1008 0x0522 1008	**Instance**	MCASP1_CFG_PER2_L4 MCASP2_CFG_PER2_L4 MCASP3_CFG_PER2_L4
Description	The RNUMEVT and RNUMDMA values must be set prior to enabling the Read FIFO. If the Read FIFO is to be enabled, it must be enabled prior to taking the McASP out of reset		

Copyright © 2025 Texas Instruments Incorporated

Table 11-1416. MCASP_RFIFOCTL (continued)

Type RW

31	30	29	28	27	26	25	24	23	22	21	20	19	18	17	16	15	14	13	12	11	10	9	8	7	6	5	4	3	2	1	0
RESERVED															WENA	WNUMEVT								WNUMDMA							

Bits	Field Name	Description	Type	Reset
31:17	RESERVED1		RW	0x0
16	RENA	Read FIFO enable bit 0x0: EN_1_0x0 - Read FIFO is disabled. The RLVL bit in the Read FIFO status register (RFIFOSTS) is reset to 0 and pointers are initialized. (That is the Read FIFO is flushed) 0x1: EN_2_0x1 - Read FIFO is enabled. If Read FIFO is to be enabled, it must be enabled to taking McASP out of reset	RW	0x0
15:8	RNUMEVT	Read word count per DMA event [32 bit]. When the Read FIFO has space for at least RNUMEVT words of data, then an AREVT (transmit DMA event) is generated to the host/DMA controller. This value should be set to a non-zero integer multiple of the number of serializes enable as transmitters. This value must be set prior to enabling the Read FIFO. 0x00: EN_1_0x0 - 0 Words 0x01: EN_2_0x1 - 1 Word 0x02: EN_3_0x2 - 2 Words 0x03: EN_4_0x3 - 3 to 64 words from 3h to 40h 0x41: EN_5_0x41 - Reserved from 41h to FFh	RW	0x10
7:0	RNUMDMA	Write word count per transfer (32 bit words). Upon a transmit DMA event from the McASP, RNUMDMA words are transferred from the Read FIFO to the McASP. This value must equal the number of serializes used as transmitters. The value must be set prior to enabling the Write FIFO. 0x00: EN_1_0x0 - 0 Words 0x01: EN_2_0x1 - 1 Word 0x02: EN_3_0x2 - 2 Words 0x03: EN_4_0x3 - 3-16 words from 3h to 10h 0x11: EN_5_0x11- Reserved from 11h to FFh	RW	0x04

Table 11-1417. MCASP_RFIFOSTS

Address Offset 0x0000 100C

Physical Address 0x051E 100C
0x0520 100C
0x0522 100C

Instance MCASP1_CFG_PER2_L4
MCASP2_CFG_PER2_L4
MCASP3_CFG_PER2_L4

Description Read Level

Type RO

31	30	29	28	27	26	25	24	23	22	21	20	19	18	17	16	15	14	13	12	11	10	9	8	7	6	5	4	3	2	1	0
RESERVED1																								RLVL							

Bits	Field Name	Description	Type	Reset
31:8	RESERVED1		RO	0x0

Copyright © 2025 Texas Instruments Incorporated

Bits	Field Name	Description	Type	Reset
7:0	RLVL	Number of 32 bit words currently if the Read FIFO Read 0x00: EN_1_0x0 - 0 Words currently in the Read FIFO Read 0x01: EN_2_0x1 - 1 Word currently in Read FIFO Read 0x02: EN_3_0x2 - 2 Words currently in Write FIFO READ 0x03: EN_4_0x3 - 3 to 64 Words currently in Read FIFO from 3h to 40h Read 0x41: EN_5_0x41 - Reserved from 41h to FFh	RO	0x0

11.6 Camera Subsystem

11.6.1 CSI2-RX

11.6.1.1 CSI2 Interface.....3781

Copyright © 2025 Texas Instruments Incorporated

11.6.1.1 CSI2 Interface

11.6.1.1.1 CSI Overview

The AM273x integrates two four-lane CSI2 receiver interfaces (2 × DHPYv0.92 + CSI-RX) in the Radar processing subsystem. The prime functionality of these interfaces is to support the reception of radar front end raw data (raw ADC data or 1st D FFT data), Chirp Quality, and monitoring data from the Radar Frontend device.

11.6.1.1.1.1 CSI2 Interface Features

- The Two CSI2 camera interfaces: CSI2-A (primary) and CSI2-B (secondary)
- Transfer pixels and data received by the CSI2 digital physical layer receiver to the system memory.
- Use unidirectional data link
- Both CSI2-A and CSI2-B support four configurable data links in addition to the clock signaling.
- Maximum data rate of 1 Gbps per data lane
- Data merger for 2-, 3-, or 4-data lane configuration
- Maximum data rate of 1 Gbps per data lane, possible configurations are:
  - One data lane: 1000 Mbps (824 Mbps if lane 4 is used)
  - Two data lanes: 2 × 1000 Mbps (2 × 824 Mbps if lane 4 is used
  - Three data lanes: 3 × 1000 Mbps (3 × 824 Mbps if lane 4 is used)
  - Four data lanes: 4 × 824 Mbps
- Error detection and correction by the protocol engine
- Direct memory access (DMA) engine integrated with dedicated first in first out (FIFO)
- One-dimensional (1D) and two-dimensional (2D) addressing mode
- Burst support
- Eight contexts to support eight dedicated configurations of virtual channel ID and data types
- Ping-pong mechanism for double-buffering
- All primary and secondary MIPI-defined formats are supported.
- Conversion of the RGB formats
- On-the-fly differential pulse code modulation (DPCM) decompression
- On-the-fly image cropping and A-law/DPCM compression
- Configuration of the complex input/output (I/O) physical layer (PHY) (MIPI D-PHY-compliant receiver PHY solution [D-PHY mode]
-
-
-

In addition to the above features, the CSI IP has been enhanced to support the following additional features.

- Support for 8/10/12/14/16-bits RAW data mode with capability of sign extension to align with 16-bit memory addressing for RAW10/12/14 modes
  - The CSI2 IP supports sign-extension in “EXP16” data modes. The below MMR bits are provided to enable sign extension instead of zero padding while writing into the CSI2 internal FIFO.
    - RCSS_CTRL: RCSS_CSI2A/B_CFG_SIGN_EXT_EN
- Interrupts for each of the DMA contexts (RCSS_CSI2A/B_EOL_CNTX0_INT…RCSS_CSI2A/B_EOL_CNTX7_INT)
  - 8 line end interrupts are generated corresponding to the 8 CSI2 contexts. These interrupts are generated after the last word of N line data (N= RCSS_CSI2A/B_CTX[0-7]_LINE_PING_PONG_NUM_LINES) for that particular context is written into the destination address by the CSI2 DMA.
  - These interrupts are connected to the following interrupt and DMA lines:
    - MSS CR5 A/B
    - DSS DSP
    - DSS CM4
    - DSS_TPCC_B (CSI2A interrupts)

Copyright © 2025 Texas Instruments Incorporated

    - DSS_TPCC_C (CSI2B interrupts)
    - RCSS_TPCC_A
  - These context based interrupts are also connected to HWA and can be configured to be used as HWA triggers.
- Frame start interrupts (RCSS_CSI2A/B_SOF_INT0 , RCSS_CSI2A/B_SOF_INT1)
  - Can be independently configured to select any of the 8 CSI2 context based frame start interrupts using below MMR register
    - RCSS_CSI2A/B_CFG_SOF_INTR1_SEL / RCSS_CSI2A/B_CFG_SOF_INTR0_SEL
  - These interrupts are connected to the following interrupt and DMA lines
    - MSS CR5 A/B
    - DSS DSP
    - DSS CM4
    - DSS_TPCC_B(CSI2A interrupts)
    - DSS_TPCC_C(CSI2B interrupts)
    - RCSS_TPCC_A
  - These context based interrupts are also connected to HWA and can be configured to be used as HWA triggers.
- N Line wise Ping-pong mode
  - Legacy CSI2 IP supports only Frame based ping pong DMA trasfers. In AM273x, support is provided to support ping-pong switch at line level and also after “N”(N being programmable) number of lines.These can be enabled using below MMR registers
    - RCSS_CTRL: RCSS_CSI2A/B_CTX[0-7]_LINE_PING_PONG_ENABLE Enable line ping/pong feature instead of frame ping/pong
    - RCSS_CTRL: RCSS_CSI2A/B_CTX[0-7]_LINE_PING_PONG_NUM_LINES Number of lines after which the CSI2 DMA writes switch between ping and pong
  - At the start of a frame, the CSI2 DMA writes always starts from the PING start address for all contexts
- Parity for CSI2 memories
  - Byte-wise parity support is provided for FIFO RAM and CTX RAM
  - The parity enable for the RAMs are provided below
    - RCSS_CTRL:RCSS_CSI2A/B_PARITY_CTRL_FIFO_PARITY_EN
    - RCSS_CTRL: RCSS_CSI2A/B_PARITY_CTRL_CTX_PARITY_EN
  - The parity error status for the RAMs are available in below configuration registers
    - RCSS_CTRL: RCSS_CSI2A/B_PARITY_STATUS_FIFO_PARITY_ADDR
    - RCSS_CTRL: RCSS_CSI2A/B_PARITY_STATUS_FIFO_PARITY_ADDR

Copyright © 2025 Texas Instruments Incorporated

11.6.1.1.2 CSI2 PHY

11.6.1.1.2.1 CSI2 PHY Overview

Two MIPI D-PHY-compliant CSIRX PHY receivers act as a physical connection and configuration of clock/data lanes with external sensors. CSIRX PHY supports up to four configurations, depending on the required number of D-PHY data lane external sensors. The receivers are compatible with the *MIPI D-PHY Specification v0.92*.

The PHY is controlled and must be configured first from the control module for pad configuration. The differential data/clock lanes coming into the CSI2-A and CSI2-B CSIRX are explained in the CSI2 PHY control registers CSI2_PHY_CFG.

As mentioned previously, two PHYs are integrated in the device. Both the CSI2-A and CSI2-B CSIRX contain four data lanes, as shown in Figure 11-360.

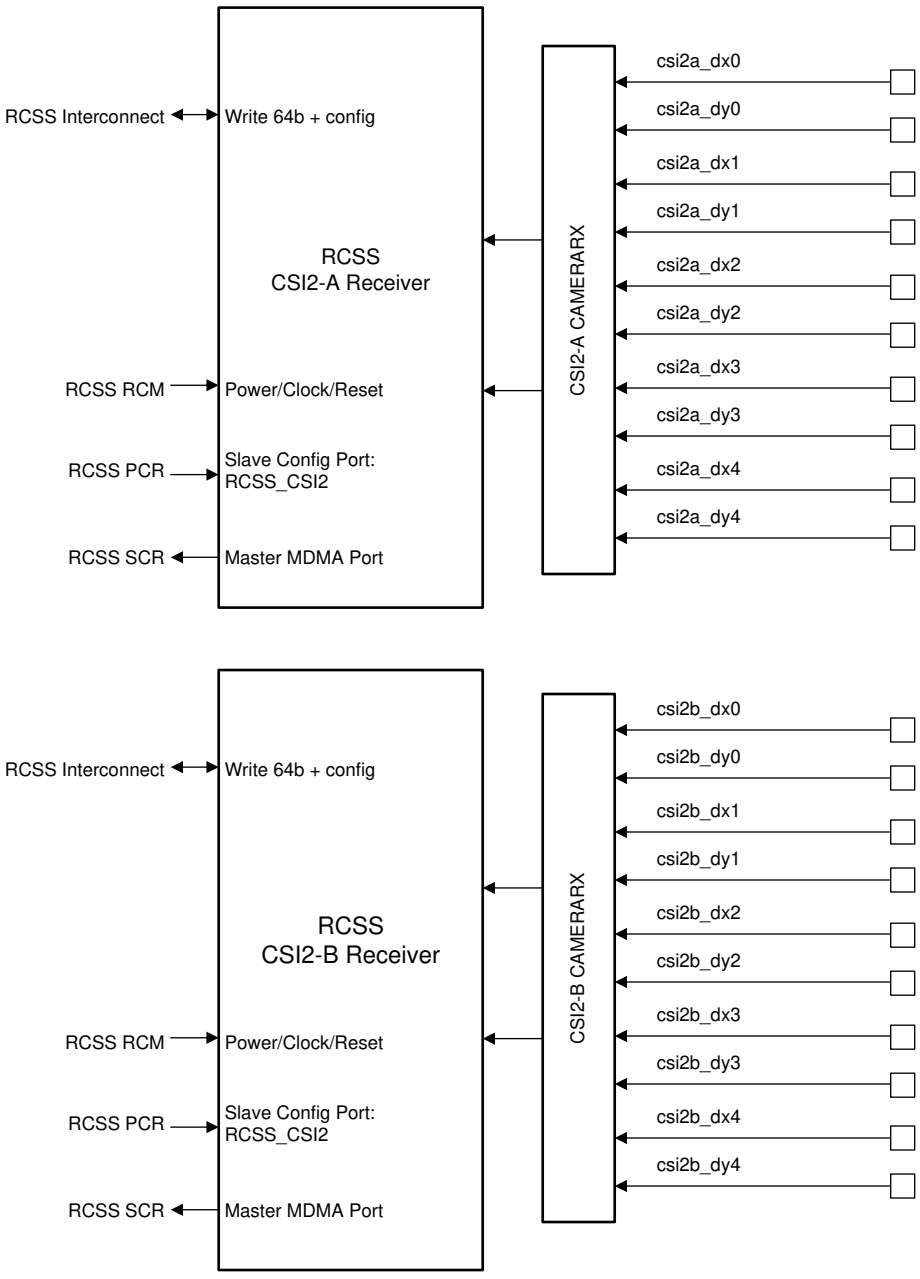

Figure 11-360. Interfaces CSI2-A PHY Diagram Four D-PHY Data Lane Configuration

Copyright © 2025 Texas Instruments Incorporated

Note

LANE 4 can be used only as a data lane, never as a clock lane. All other configurations are possible. Also, a speed restriction is present when lane 4 is used; then all data lanes perform at up to 824 Mbps instead of 1000 Mbps.

CSI2-A and CSI2-B CSIRX represent the overall PHY solution for connecting external sensors to feed the CSI interface. The MIPI D-PHY function can support up to four data lane modules and one clock lane module. Reverse direction escape mode is not supported. The lane module polarity and positions are configurable; that is, any lane module can be chosen as the clock lane module, and the DX/DY data pad for each lane module can be configured as DP or DN pins defined.

11.6.1.1.2.2 CSI2 PHY Functional Description

11.6.1.1.2.2.1 CSI2 PHY Functional Configuration

The CSI2 PHY converts the bitstream, divided into 1 to 4 serial data lanes, into a bitstream compatible with the CSI2 receiver and one clock lane.

The register logs complex I/O events of the following types:

- Line power-state change (all lanes in ultralow-power mode [ULPM], at least one lane exits ULPM, etc.)
- Error on one lane

The CSI2 receiver embeds two registers to configure/read some complex I/O parameters:

- The register detects clock miss with respect to the *MIPI D-PHY Specification v0.92* and control timing.
- The register reports completion of reset on the different parts of the module and configures the timing parameters.
- The registers contain the PWR_AUTO and PWR_CMD bit fields, which affect the power management of the two complex I/Os.

The complex I/O has three power modes: on, off, and ultralow power (ULP). These modes can reflect the ON or ULP states of the five differential lines if the CSI2_COMPLEXIO_CFG[24] PWR_AUTO bit is set to 1. If the PWR_AUTO bit is at reset value (0), the complex I/O power state is controlled by the CSI2_COMPLEXIO_CFG[28:27] PWR_CMD bit field, which directly defines the power state. Figure 11-361 shows the complex I/O power finite state-machine (FSM).

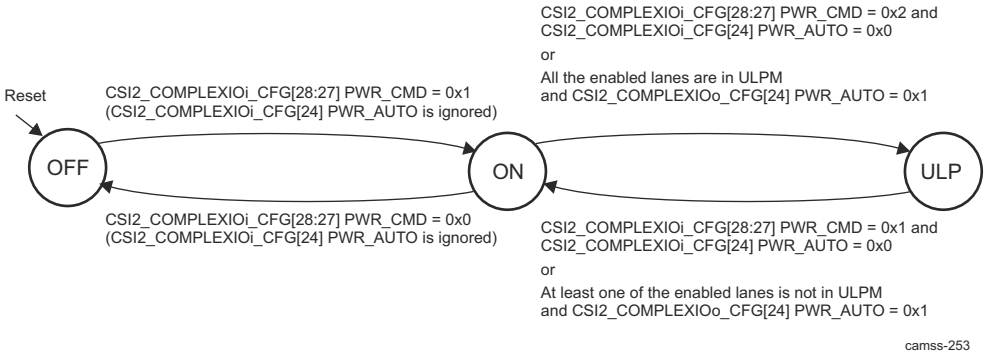

Figure 11-361. CSI2 Complex I/O Power FSM

Another register, , is used to control the power state of the complex I/O modules with regard to the differential line state. This register controls the mode of the two complex I/Os (RxMode and NoRxMode) and the delay between the differential lanes in STOP state and the complex I/O on NoRxMode. The CSI2_TIMING[15] FORCE_RX_MODE_IO1 bit sets the complex I/O in RxMode or NoRxMode (stopped mode). The FORCE_RX_MODE_IO bit is automatically reset to 0 by hardware when the counter ends and the FSM returns to NoRxMode. Three bits (CSI2_TIMING[14] STOP_STATE_X16_IO1, CSI2_TIMING[13] STOP_STATE_X4_IO1, and the CSI2_TIMING[12:0] STOP_STATE_COUNTER_IO1 bit field) configure the

Copyright © 2025 Texas Instruments Incorporated

delay between line stop mode and complex I/O stop mode. The delay represents the number of functional clock cycles and can be calculated as follows:

Total delay in clock cycle = CSI2_TIMING.STOP_STATE_COUNTER_IO x (1+CSI2_TIMING.STOP_STATE_X16_IO x 15) x (1+CSI2_TIMING.STOP_STATE_X4_IO x 3).

Table 11-1418 lists the possible values of the delay, in terms of the clock cycles, depending on the values of the STOP_STATE_X16_IO and STOP_STATE_X4_IO bits.

Table 11-1418. CSI2 Possible Time-Out Value for RxMode Counter

STOP_STATE_X16_IO	STOP_STATE_X4_IO	Possible Delay Value (in Functional Clock Cycles)
0x0	0x0	8191 (with step of 1)
0x0	0x1	32764 (with step of 4)
0x1	0x0	131056 (with step of 16)
0x1	0x1	524224 (with step of 64)

The FORCERXMODE signal is used at initialization time (complex I/O). Figure 11-362 describes the ForceRxMode and StopState FSM to assert and deassert the FORCERXMODE signal and to monitor STOPSTATE from the complex I/O.

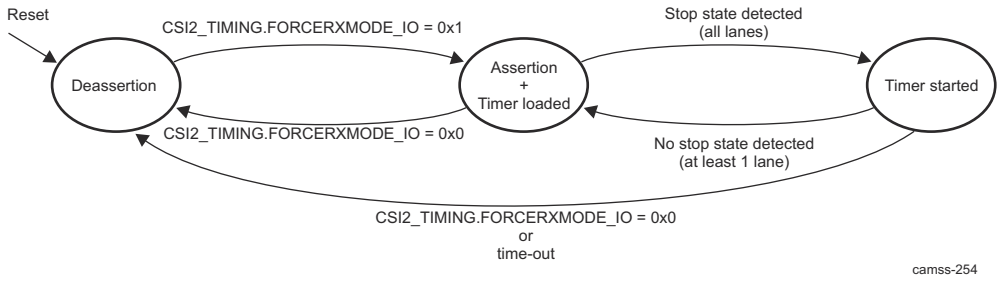

Figure 11-362. CSI2 RxMode and StopState FSM

11.6.1.1.2.2.2 CSI2 PHY and Link Initialization Sequence

The MIPI D-PHY initialization sequence is not implemented within CSIRX. The CSI2 receiver is expected to coordinate the PHY initialization. The controller must ensure that the PHY is held in RESET/WAIT for RX mode until the D-PHY transmitter is powered up and the link comes to the defined state. The controller can use the STOPSTATE and FORCERXMODE signals of CSIRX for this purpose. STOPSTATE indicates the line states, while FORCERXMODE forces the receiver state-machine into "wait for stop state." One possible initialization sequence is:

To fully initialize the CSIPHY, perform the following steps:

1. Configure all CSI2 receiver registers to be ready to receive signals/data from the CSIPHY:
   a. Configure all needed CSI2 registers:
      i. Set [18:16] DATA4_POSITION.
      ii. Set [14:12] DATA3_POSITION.
      iii. Set [10:8] DATA2_POSITION.
      iv. Set [6:4] DATA1_POSITION.
      v. Set [2:0] CLOCK_POSITION.
      vi.

> **CAUTION**
>
> This must be done before the CSIPHY is active.

2. CSIPHY and link initialization sequence:
   a. Deassert the CSIPHY reset.

Copyright © 2025 Texas Instruments Incorporated

i. Set [30] RESET_CTRL to 0x1.

CAUTION

For the [29] RESET_DONE bit to be set to 0x1 (reset completed), the external sensor must to be active and sending the MIPI HS BYTECLK.

The following registers can be set only after deasserting the CSIPHY reset and before asserting the FORCERXMODE signal:

•
•
•

b. Assert the FORCERXMODE signal:
   i. Set [15] FORCE_RX_MODE_IO1 to 0x1.

c. Connect pulldown on link (DP/DN) by asserting the respective PIPD* signals (PIPD* = 0):

   For CSI2-A/B CSIRX pulldown on signals using the RCSS_CTRL: RCSS_CSI2A/B_LANE_CFG registers for each lane:

   •
   •

d. Power up the CSIPHY:
   i. Set [28:27] PWR_CMD to 0x1.

e. Check whether the state status reaches the ON state:
   • [26:25] PWR_STATUS = 0x1

f. Wait for STOPSTATE = 1 (for all enabled lane modules):
   i. The timer is set through the [14:0] bit field. The reset value can be kept.
   ii. Wait until [15] FORCE_RX_MODE_IO1 = 0x0. It is automatically put at 0 when all enabled lanes are in STOPSTATE and the timer is finished.

g. Release PIPD* (= 1).

   For CSI2-A/B CSIRX pullup on signals using the RCSS_CTRL: RCSS_CSI2A/B_LANE_CFG registers for each lane:

   •

3. The CSIPHY is initialized and ready/active in CSI2 mode.

11.6.1.1.2.2.3 CSI PHY Error Signals

In D-PHY mode, the CSIPHY supports the following error detection and signaling to the associated receiver:

- ERRSOTHS: Flags 1-bit errors in the HS start of transmission synchronization pattern. In this error scenario, the CSIPHY continues to receive the data and pass it to the receiver, but confidence in the data may be low, because of the 1-bit error seen in sync. This signal, if asserted, is high for one cycle of RXBYTECLKHS.
- ERRSOTSYNCHS: Flags multiple bit errors in the HS start of transmission synchronization pattern. In this case, the CSIPHY cannot achieve proper synchronization and does not pass the received data to the receiver. This signal, if asserted, is high for one cycle of RXBYTECLKHS.
- ERRCONTROL: Flags the control sequence error; that is, when the LP sequence observed on line is not recognized as a valid control sequence. This signal, if asserted, is high until the next change in the state of the LP line.
- ERRESC: Flags the escape entry error; that is, when the escape entry sequence is unrecognized. This signal, if asserted, is high until the next change in the state of the LP line.

Copyright © 2025 Texas Instruments Incorporated

11.6.1.1.3 CSI2

11.6.1.1.3.1 CSI2 Environment

11.6.1.1.3.1.1 CSI2 Protocol and Data Format

The CSI2 supports MIPI CSI2 multiple data type formats. This section describes MIPI CSI2 protocol and data formats. The CSI2 is compatible with the *MIPI CSI2 Specification v1.0-01-00 r0.03*. Table 11-1419 lists the MIPI CSI2 supported by CSI2 formats in addition to JPEG8. Shading in the primary and secondary MIPI CSI2-defined formats indicates special format extensions of the CSI2 receiver.

Table 11-1419 summarizes the pixel formats supported by the CSI2 receiver interface.

Table 11-1419. CSI2 Pixel Format Modes

CSI2_CTX_CTRL2_i[9:0] Format	CSI2 Data Format	Bits per Pixel (BPP)	Data Size Increases in Memory	2D Mode Availability	Comments
0x18	YUV4:2:0 8 bit	12	0%	Yes	
0x19	YUV4:2:0 10 bit	12	0%	Yes	
0x1E	YUV4:2:2 8 bit	16	0%	Yes	
0x1F	YUV4:2:2 10 bit	16	0%	Yes	
0x22	RGB565	16	0%	Yes	
0x24	RGB888	24	0%	Yes	
0x29	RAW7	7	0%	Yes	
0x2A	RAW8	8	8%	Yes	
0x2B	RAW10	10	0%	Yes	
0x2C	RAW12	12	0%	Yes	
0x2D	RAW14	14	0%	Yes	
0xA3	RGB666 + EXP32	32	77%	Yes	
0x68	RAW6 + EXP8	8	33%	Yes	
0x69	RAW7 + EXP8	8	14%	Yes	
0xA0	RGB444 + EXP16	16	33%	Yes	
0xA1	RGB555 + EXP16	16	6%	Yes	
0xAB	RAW10 + EXP16	16	60%	Yes	
0xAC	RAW12 + EXP16	16	33%	Yes	
0xAD	RAW14 + EXP16	16	14%	Yes	
0xE3	RGB666 + EXP32	32	77%	Yes	
0xE4	RGB888 + EXP32	32	33%	Yes	
0x2A8	RAW6 + DPCM10 + EXP16	16	166%	Yes	DPCM decompression
0x229	RAW7 + DPCM10 + EXP16	16	128%	Yes	DPCM decompression
0x2AA	RAW8 + DPCM10 + EXP16	16	100%	Yes	DPCM decompression
0x369	RAW7 + DPCM12 + EXP16	16	128%	Yes	DPCM decompression
0x36A	RAW8 + DPCM12 + EXP16	16	100%	Yes	DPCM decompression
0x3A8	RAW6 + DPCM12 + EXP16	16	166%	Yes	DPCM decompression
0x12	JPEG8	8	0%		

For more information about how the data formats are transmitted and how the data are stored in memory, see Section 11.6.1.1.3.1.1.4, *CSI2 Operating Modes*.

Copyright © 2025 Texas Instruments Incorporated

11.6.1.1.3.1.1.1 CSI2 Physical Layer

The CSI2-A/CSI2-B receivers are tightly connected to a PHY layer (for more information about the PHY, see Section 11.6.1.1.2, *CSI2 PHY*). Table 11-1420 lists the CSI2-A receiver I/O , and Table 11-1421 lists the CSI2-B receiver I/O. The CSI2_RECEIVER provides access to the complex I/O configuration from the CSI2_COMPLEXIO_CFG register.

Table 11-1420. CSI2-A I/O Description

Signal Name		I/O(1)	Description
csi2a_dx0	lane 0 (position 1)	I	Serial data/clock input
csi2a_dy0			
csi2a_dx1	lane 1 (position 2)	I	Serial data/clock input
csi2a_dy1			
csi2a_dx2	lane 2 (position 3)	I	Serial data/clock input
csi2a_dy2			
csi2a_dx3	lane 3 (position 4)	I	Serial data/clock input
csi2a_dy3			
csi2a_dx4	lane 4 (position 5)	I	Serial data input only
csi2a_dy4			

(1) I = Input

Table 11-1421. CSI2-B I/O Description

Signal Name		I/O(1)	Description
csi2b_dx0	lane 0 (position 1)	I	Serial data/clock input
csi2b_dy0			
csi2b_dx1	lane 1 (position 2)	I	Serial data/clock input
csi2b_dy1			
csi2b_dx2	lane 2 (position 3)	I	Serial data/clock input
csi2b_dy2			
csi2b_dx3	lane 3 (position 4)	I	Serial data/clock input
csi2b_dy3			
csi2b_dx4	lane 4 (position 5)	I	Serial data input only
csi2b_dy4			

Note

The serial lane can be used as clock lane or data lane (excluding lane 4 on the CSI2-A I/O). The MIPI CSI2 protocol requires one clock lane (others are data lane or unused lane).

Lanes support the two operating modes:

- HS mode: High-speed transmit mode
- Off mode: Lane is off.

Copyright © 2025 Texas Instruments Incorporated

11.6.1.1.3.1.1.2 CSI2 Lane Merger

The layer consists of lane merger logic to merge the incoming serial stream into a byte stream. The lane merger can merge up to four lanes (CSI2-A) into a single byte stream. The bits are sent with the LSB first. The order of the lanes at the CSI2-A, CSI2-B receiver core depends on the lane configuration. The merger is not used for a single lane.

The number of lanes and their configuration can be changed only in ULPM or when all data lanes are in off mode.

Figure 11-363 to Figure 11-366 show the byte position into each serial link for one to four data lane configurations. The byte stream always starts from lane 1. It finishes on one of the lanes, depending on the number of bytes to receive and the number of lanes.

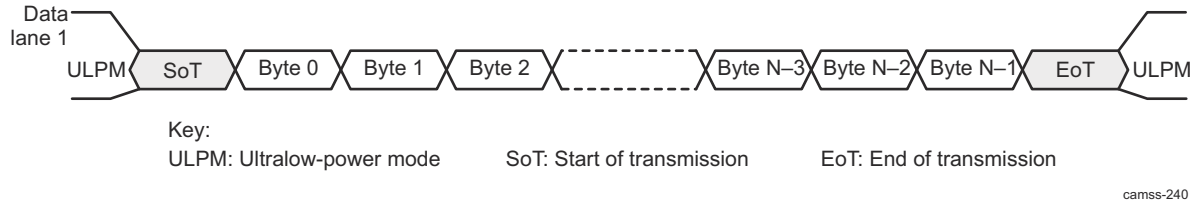

Figure 11-363. CSI2 One Data-Lane Configuration

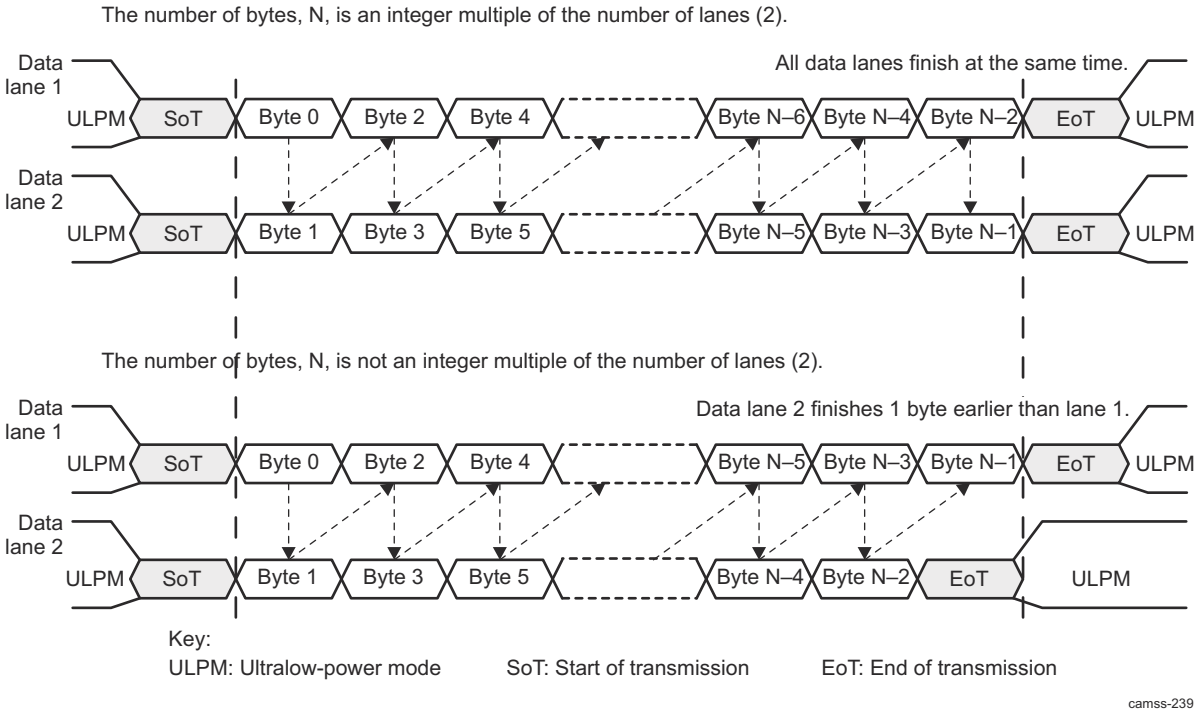

Figure 11-364. CSI2 Two Data-Lane Merger Configuration

Copyright © 2025 Texas Instruments Incorporated

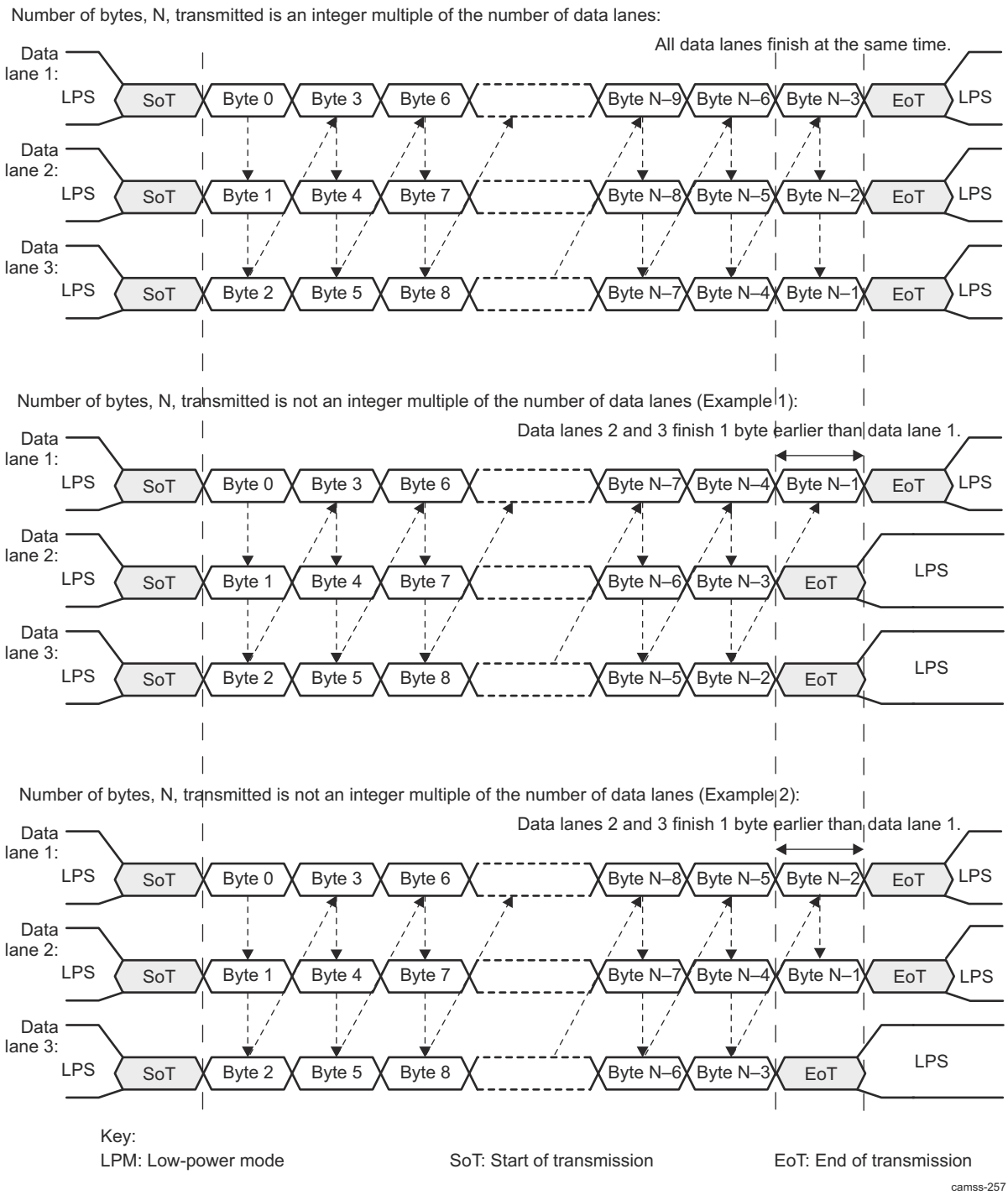

Figure 11-365. CSI2 Three Data-Lane Merger Configuration

Copyright © 2025 Texas Instruments Incorporated

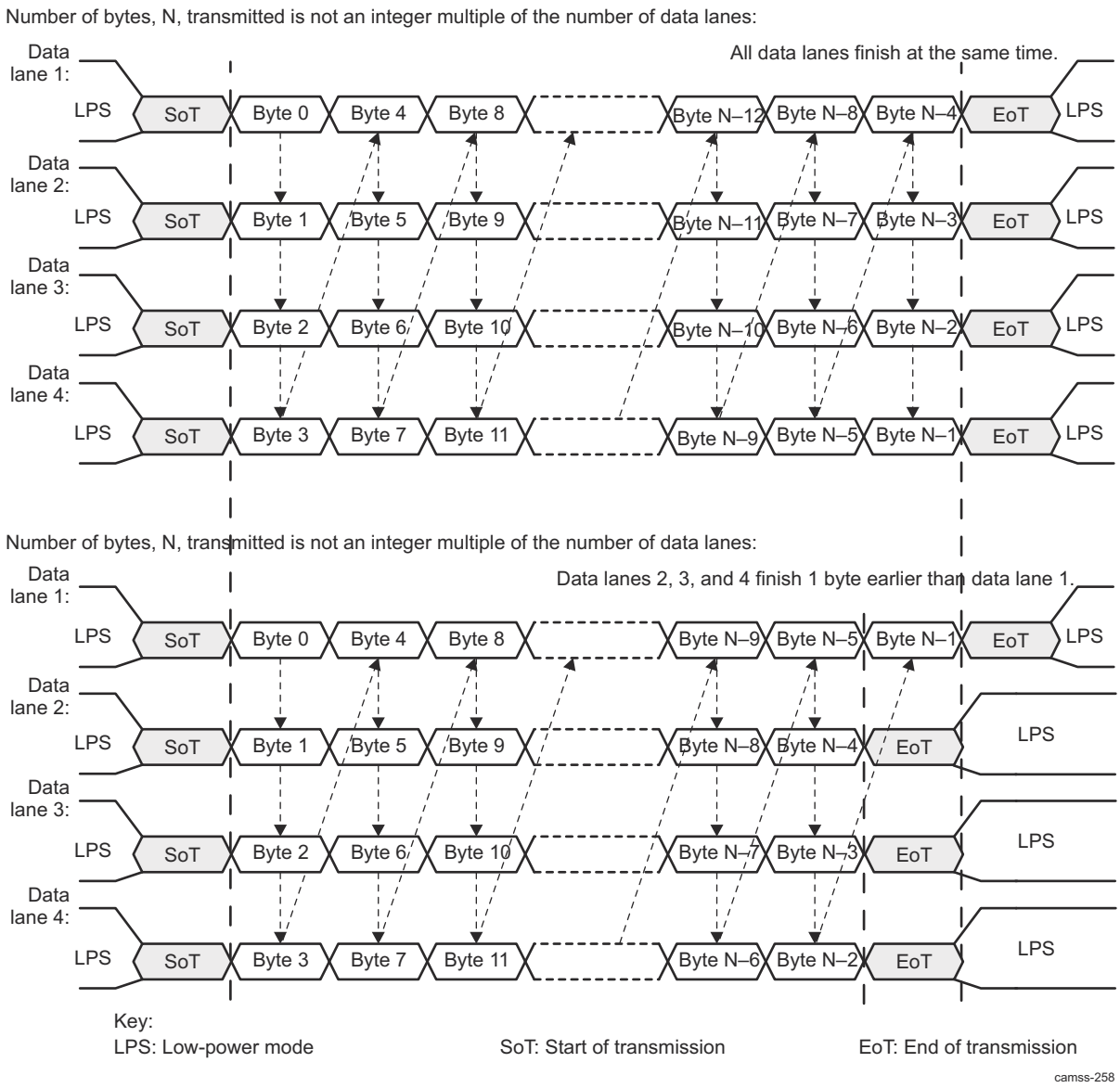

Figure 11-366. CSI2 Four Data-Lane Merger Configuration

11.6.1.1.3.1.1.3 CSI2 Protocol Layer

The low-level protocol (LLP) is a byte-oriented protocol from the lane merger layer. It supports short and long packet formats.

The CSI2 protocol layer defines how image-sensor data is transported onto the physical layer.

The feature set of the protocol layer implemented by the CSI2 receiver is:

- Transport of arbitrary data (payload-independent)
- 8-bit word size
- Support for up to four interleaved virtual channels on the same link
- Special packets for frame-start, frame-end, line-start, and line-end information
- Descriptor for the type, pixel depth, and format of application-specific payload data
- Error-correction code (ECC) for 1-bit error correction or 2-bit error detection in the header
- 16-bit checksum code for payload error detection

Figure 11-367 shows the CSI2 protocol layer with short and long packets.

Copyright © 2025 Texas Instruments Incorporated

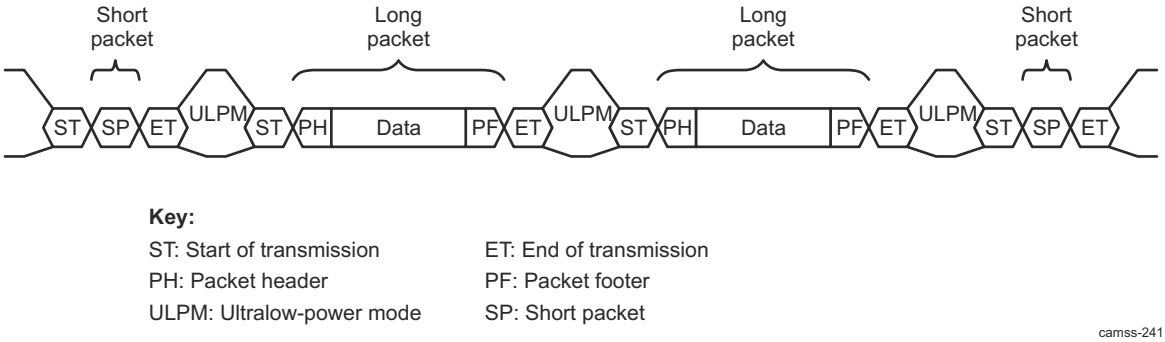

Figure 11-367. CSI2 Protocol Layer With Short and Long Packets

Two packets are always separated from each other with a sequence of ET, ULPM, and ST.

11.6.1.1.3.1.1.3.1 CSI2 Short Packet

A short packet is identified by data types 0x00 to 0x0F. A short packet can be used for frame or line synchronization or for generic data. Figure 11-368 shows the structure of a short packet.

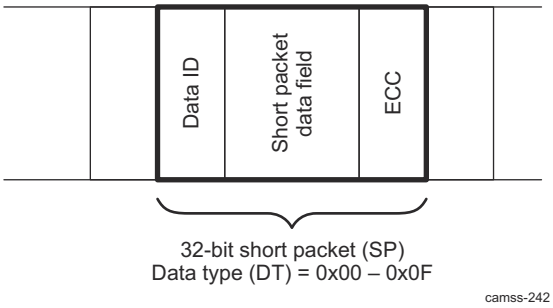

Figure 11-368. CSI2 Short Packet Structure

For frame-synchronization data types, the short packet data field is the frame number. For line-synchronization data types, the short packet data field is the line number. For generic short packet data types, the content of the short packet data field is user-defined.

The 16-bit frame number, when used, is always nonzero to distinguish it from the use case where the frame number is inoperative and remains set to 0. The behavior of the 16-bit frame number is one of the following:

- The frame number is always 0 and is inoperative.
- The frame number increments by 1 for every FS packet within the same virtual channel and is periodically reset to 1 (1, 2, 1, 2, 1, 2, 1, 2 or 1, 2, 3, 4, 1, 2, 3, 4).

For LSC and LEC synchronization packets, the short packet data field contains a 16-bit line number. This line number is the same for the LS and LE packets corresponding to a given line. Line numbers are logical line numbers and do not necessarily equal physical line numbers. The 16-bit line number, when used, is always nonzero to distinguish it from the use case where the line number is inoperative and remains set to 0.

The behavior of the 16-bit line number is one of the following:

- The line number is always 0 and is inoperative.
- The line number increments by 1 for every LS packet within the same virtual channel and the same data type. The line number is periodically reset to 1 for the first LS packet after an FS packet. The intended use is for progressive scan (noninterlaced) video data streams. The line number must be a nonzero value.
- The line number increments by the same arbitrary step value greater than 1 for every LS packet within the same virtual channel and the same data type. The line number is periodically reset to a nonzero arbitrary start value for the first LS packet after an FS packet. The arbitrary start value can be different between successive frames. The intended use is for interlaced video data streams.

Copyright © 2025 Texas Instruments Incorporated

The ECC byte allows single-bit errors to be corrected and 2-bit errors to be detected in the short packet.

Short packets apply to all contexts using the same virtual channel ID (up to eight contexts support eight dedicated configurations of virtual channel ID and data types). The data type associated with the context is not used to distinguish which context is used when receiving short packets.

11.6.1.1.3.1.1.3.2 CSI2 Long Packet

A long packet is identified by data types 0x10 to 0x37. A long packet consists of three elements:

- A 32-bit packet header (PH)
- An application-specific data payload with a variable number of 8-bit data words
- A 16-bit packet footer (PF)

The packet header is composed of three elements:

- An 8-bit data identifier
- A 16-bit word count field
- An 8-bit ECC

The packet footer has one element, a 16-bit checksum.

Figure 11-369 and Table 11-1422 show the structure of a long packet.

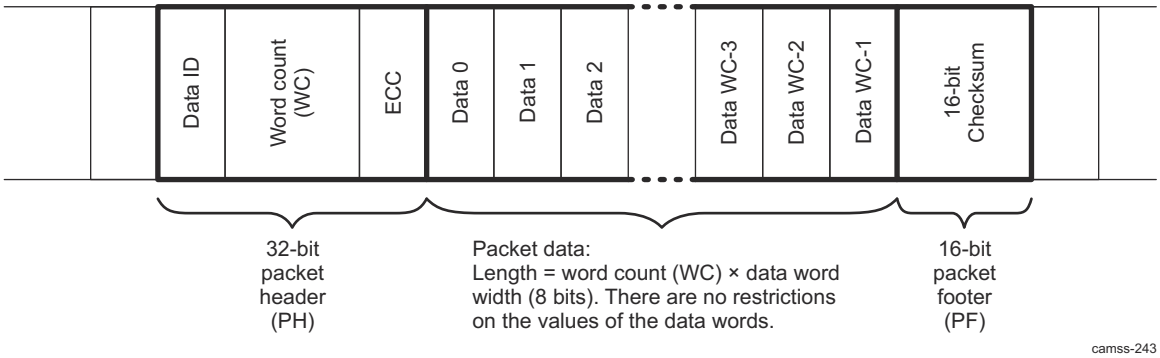

Figure 11-369. CSI2 Long Packet Structure

Table 11-1422. CSI2 Long Packet Structure Description

Packet Part	Field Name	Size (Bits)	Description
Header	Data ID	8	Contains the virtual channel identifier and the data-type information
	Word count	16	Number of data words in the packet data. A word is 8 bits.
	ECC	8	ECC for data ID and WC field. Allows 1-bit error recovery and 2-bit error detection.
Data	Data	WC-8	Application-specific payload (WC words of 8 bits)
Footer	Checksum	16	16-bit CRC for packet data

There are no restrictions on the size of the packet data, but each data format can impose additional restrictions on the length of the payload data (for example, a multiple of 4 bytes).

11.6.1.1.3.1.1.3.3 CSI2 Data Identifier

The data identifier byte contains the virtual channel (VC) value and the data-type (DT) value, as shown in Figure 11-370. The VC value is in the 2 MSBs of the data identifier byte. The DT value is in the 6 LSBs of the data identifier byte.

Figure 11-370 shows the data identifier structure.

Copyright © 2025 Texas Instruments Incorporated

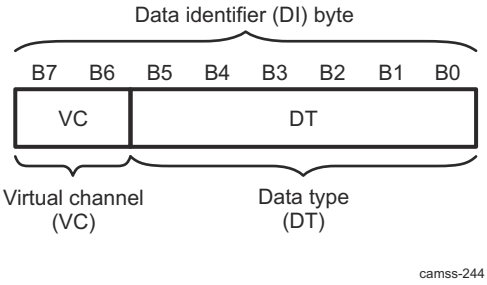

Figure 11-370. CSI2 Data Identifier Structure

Virtual Channel

The CSI2 protocol layer transports virtual channels. Virtual channels are built of frames. A frame can comprise embedded data and image-sensor data. Two contexts are used to send the two types of data separately. Each frame is identified by unique mandatory synchronization codes: frame start and frame end. Line start and line end synchronization codes are optional for the transmitter. A set of registers is associated with each context defined by the virtual channel ID and the data type. Figure 11-371 shows a virtual channel.

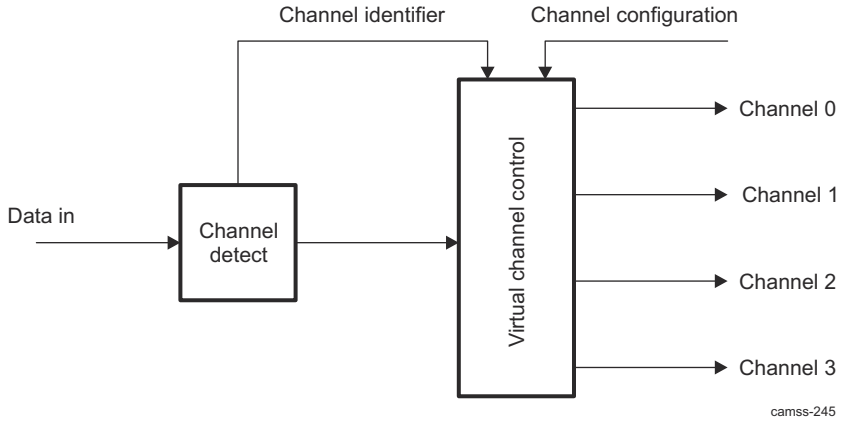

Figure 11-371. CSI2 Virtual Channel

Pixel Formats

11.6.1.1.3.1.1.3.4 CSI2 Synchronization Codes

Data reception from the image-sensor module uses four synchronization codes embedded in the serial bitstream:

- FSC: Identifies the start of a new frame
- LSC: Identifies the start of a new line; received for every line
- LEC: Identifies the end of a line; received for every line
- FEC: Identifies the end of the last line and the end of the current frame

Table 11-1423 summarizes the synchronization code values.

Table 11-1423. CSI2 Synchronization Codes

Synchronization Code	Value	Comments
FSC	0x0	Mandatory
FEC	0x1	Mandatory
LSC	0x2	Optional
LEC	0x3	Optional
Reserved	0x4 to 0x7	Not used

Copyright © 2025 Texas Instruments Incorporated

11.6.1.1.3.1.1.3.5 CSI2 Generic Short Packet Codes

When the synchronization code value is from 0x8 to 0xF, the short packet is called a generic short packet. Short packets are not processed by the camera interface hardware. A generic short packet is stored in a register without the ECC and an interrupt can be generated. Therefore, generic short packets must be handled by software.

11.6.1.1.3.1.1.3.6 CSI2 Generic Long Packet Codes

The code value 0x10 indicates null packets, which can be received at any time. They are discarded by the protocol engine.

The code value 0x11 indicates blanking packets, which can be received at any time. They are discarded by the protocol engine.

The code value 0x12 indicates embedded 8-bit nonimage data typically used for JPEG.

Code values from 0x13 to 0x17 are reserved.

11.6.1.1.3.1.1.3.7 CSI2 Frame Structure

Each frame consists of short packets to indicate SOF and EOF. Optional short packets for start of line and end of line can be sent by the image sensor.

Some information before and after the picture data can be sent as SOF and EOF information by the image sensor to the memory through the L3 port.

For each frame, the pixel data (arbitrary data or user-defined byte data) are valid only after an SOF short packet. If the data are invalid, they are discarded by the protocol engine.

A frame contains embedded data and image-sensor data. Figure 11-372 shows where the embedded data and image-sensor data are in the frame. The frame is scanned in raster order starting from the top-left corner, as shown in Figure 11-372 and Figure 11-373. The following definitions for a frame apply:

- Zero or more SOF status lines (SOF lines) can be embedded at the beginning of a CSI2 frame.
- The image embedded data is carried using separate data types and virtual channels (see Section 11.6.1.1.3.3.2.4, *CSI2 Virtual Channel and Context*).
- Zero or more EOF status lines (EOF lines) can be embedded at the end of a CSI2 frame.
- The SOF lines, pixel data, and EOF lines do not overlap.

The CSI2 receiver does not use the information in the status lines. However, it extracts it and stores it in memory for use by software.

Because the data types are different, the data is carried using separate data types called virtual channels. Those must be mapped to the adequate context. The CSI2 receiver uses a different context for embedded data and image-sensor data. See Section 11.6.1.1.3.3.2.4, *CSI2 Virtual Channel and Context*.

Embedded data is supported as a context by the CSI2 receiver; therefore, there is no specific hardware support for embedded data.

Copyright © 2025 Texas Instruments Incorporated

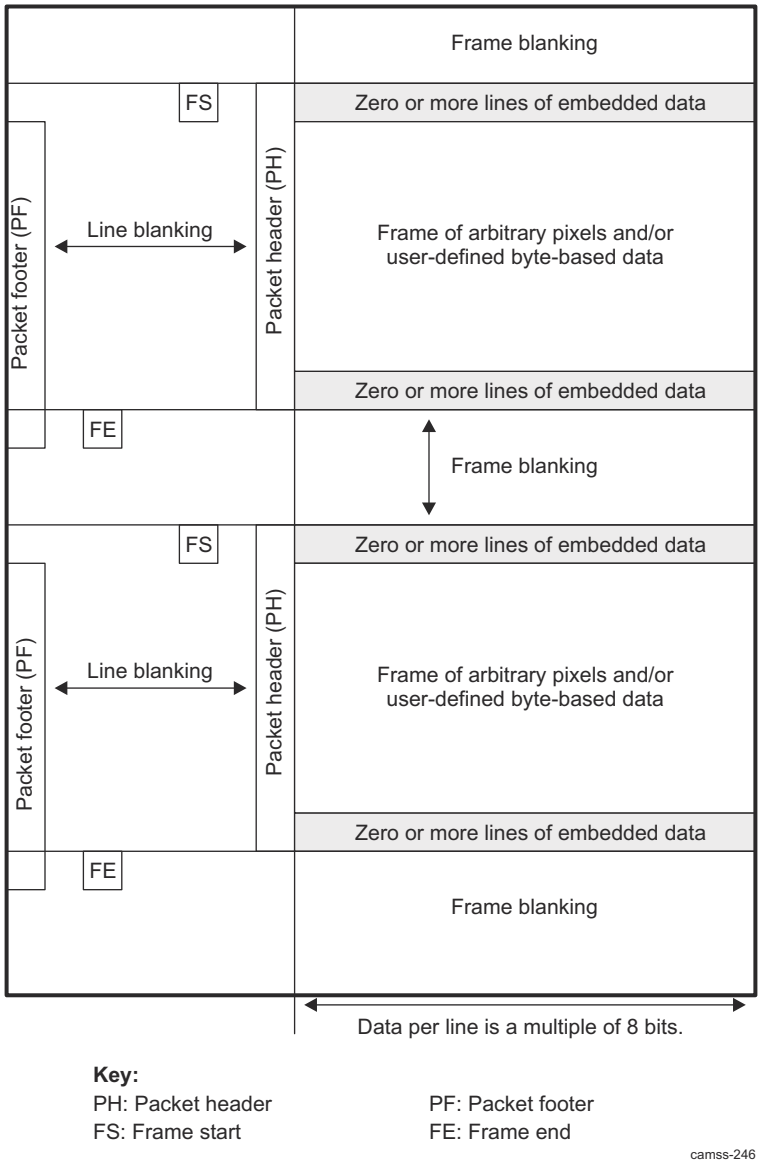

Figure 11-372. CSI2 General Frame Structure (Informative)

Figure 11-373 shows the frame structure of a YUV4:2:2 interlaced video frame without embedded data.

Copyright © 2025 Texas Instruments Incorporated

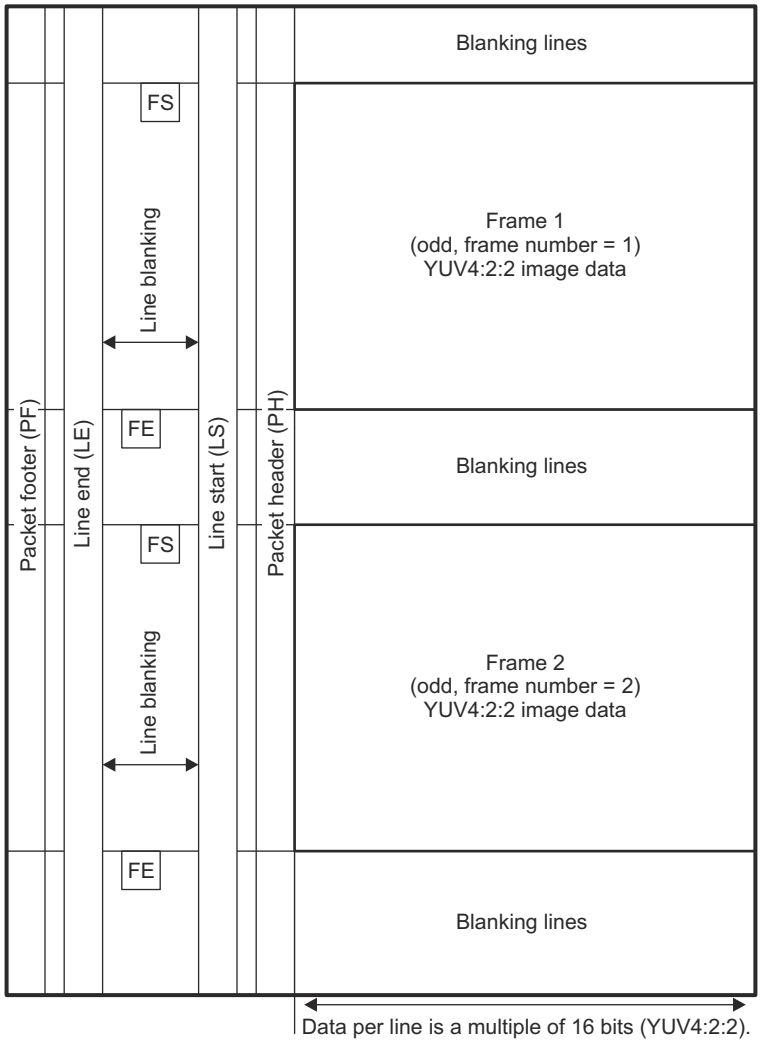

Figure 11-373. CSI2 Digital Interlaced Video Frame (Informative)

The period between the LEC and the new LSC is the line blanking period. The time between the FEC and the new FSC is the frame blanking period. The receiver works with the line blanking period set to 0. The image data is stored in memory by selecting one of the various operating modes. Section 11.6.1.1.3.1.1.4, *CSI2 Operating Modes*, explains storing image data frames into memory.

11.6.1.1.3.1.1.4 CSI2 Operating Modes

11.6.1.1.3.1.1.4.1 CSI2 YUV Operating Modes

11.6.1.1.3.1.1.4.1.1 CSI2 YUV4:2:0 8-Bit

YUV4:2:0 8-bit data can be stored to memory in little-endian and big-endian format. To set the endianness for YUV4:2:0 use the CSI2_CTRL[4] ENDIANNESS bit. The line length sent through the CSI2 physical protocol is a multiple of 16 bits for odd lines and 32 bits for even lines.

For correct pixel reconstruction, the line length must be a multiple of 32 bits and the number of lines must be even. Figure 11-374 shows the storage format for YUV4:2:0 8-bit data. It is shown as little endian. If the data format is big endian, the figure changes accordingly. Set the CSI2_CTX_CTRL2_i[9:0] FORMAT bit field to 0x18

Copyright © 2025 Texas Instruments Incorporated

to select YUV4:2:0 8-bit mode. Even and odd lines do not have the same length. Offset must be set accordingly with the CSI2_CTX_DAT_OFST_i[16:5] OFST bit field; for example, if the offset is 0, the data is written in a contiguous way (bit-to-bit of odd and even lines). If the data has an offset, set the destination offset between the first pixel of the previous line and the first pixel of the current line being written to memory.

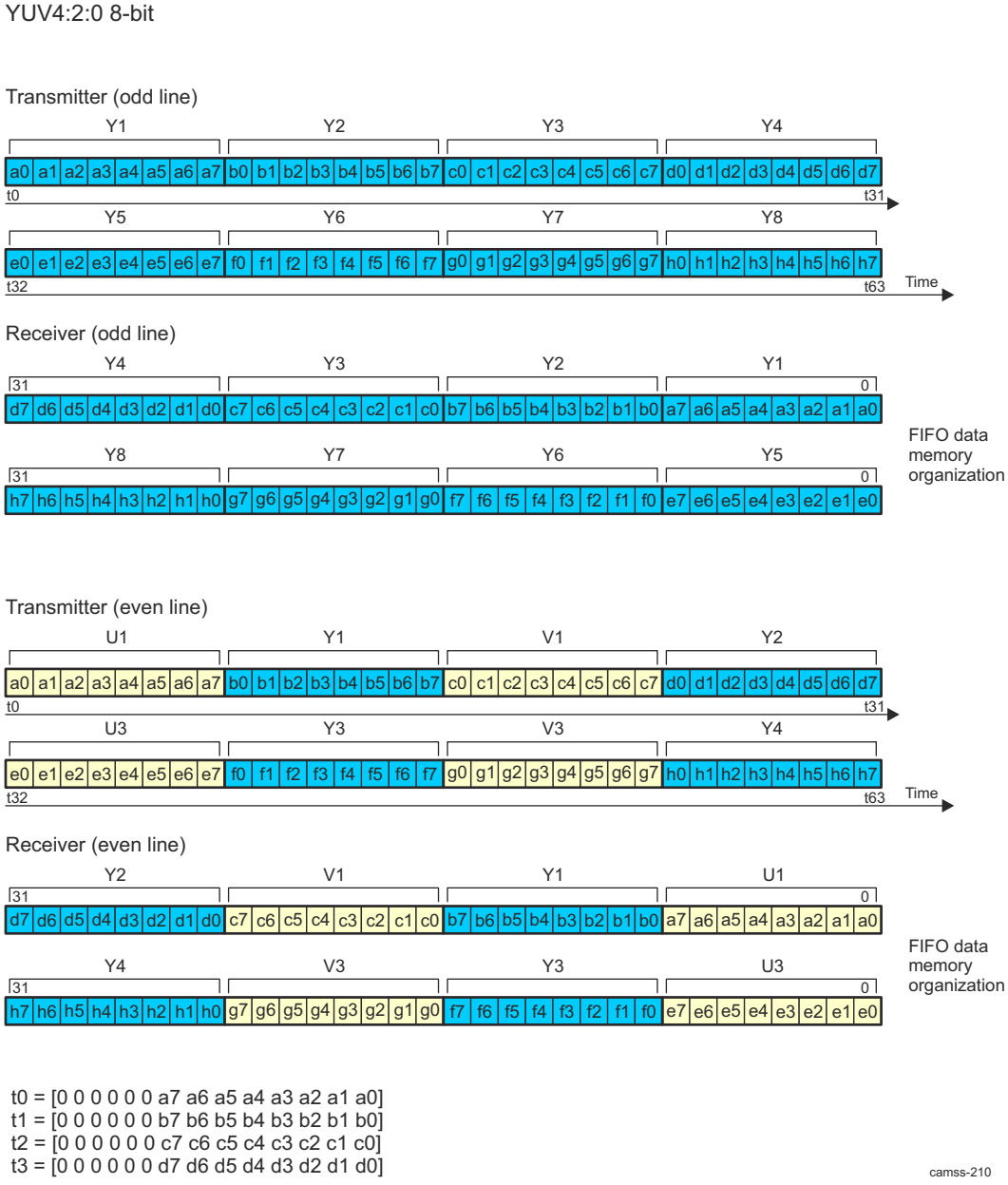

Figure 11-374. CSI2 YUV4:2:0 8-Bit

11.6.1.1.3.1.1.4.1.2 CSI2 YUV4:2:0 10-Bit

YUV4:2:0 10-bit data can be stored to memory in little-endian and big-endian format. The line length sent through the CSI2 physical protocol is a multiple of 40 bits for odd lines and 80 bits for even lines. Figure 11-375 shows the storage format for YUV4:2:0 10-bit data. Set the CSI2_CTX_CTRL2_i[9:0] FORMAT bit field to 0x19 to select YUV4:2:0 10-bit mode. Even and odd lines do not have the same length. Offset must be set accordingly with the CSI2_CTX_DAT_OFST_i[16:5] OFST bit field.

Copyright © 2025 Texas Instruments Incorporated

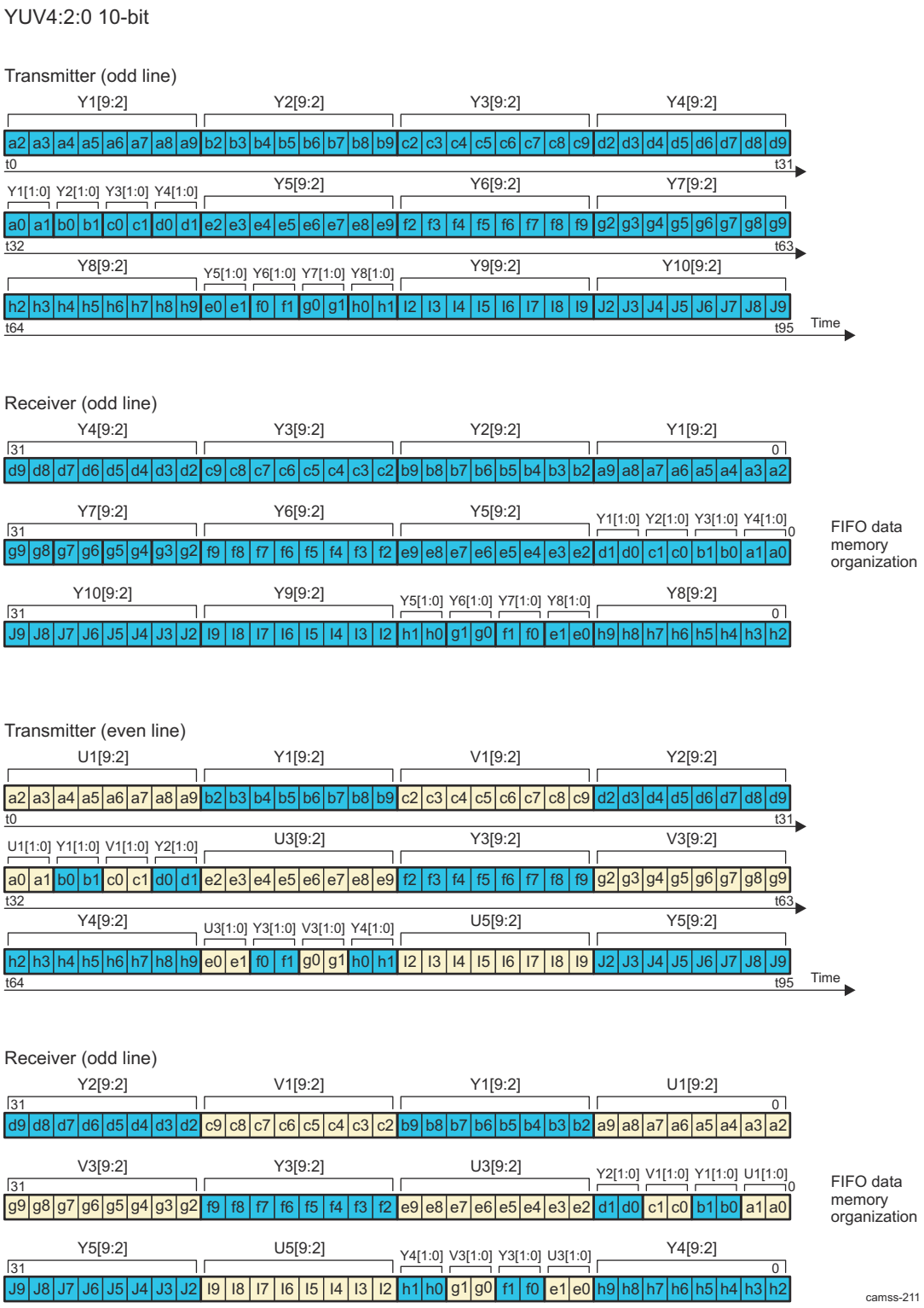

Figure 11-375. CSI2 YUV4:2:0 10-Bit

11.6.1.1.3.1.1.4.1.3 CSI2 YUV4:2:0 8-Bit Legacy

YUV4:2:0 8-bit legacy data can be stored to memory in little-endian and big-endian format. The line length sent through the CSI2 physical protocol is a multiple of 4 bytes. Figure 11-376 shows the storage format for YUV4:2:0

Copyright © 2025 Texas Instruments Incorporated

8-bit legacy data. Set the CSI2_CTX_CTRL2_i[9:0] FORMAT bit field to 0x1A to select YUV4:2:0 8-bit legacy mode.

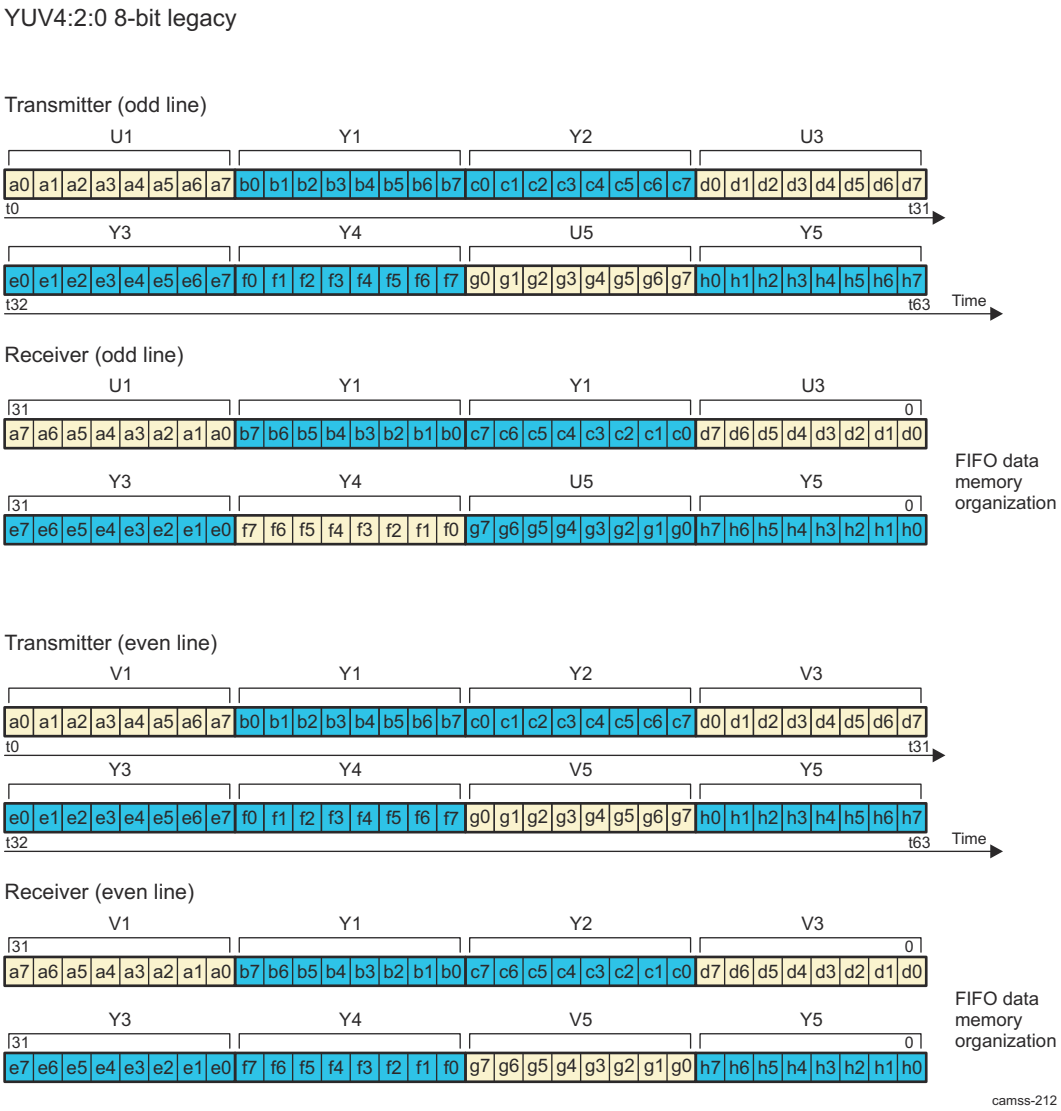

Figure 11-376. CSI2 YUV4:2:0 8-Bit Legacy

11.6.1.1.3.1.1.4.1.4 CSI2 YUV4:2:0 8-Bit + CSPS

YUV4:2:0 8-bit CSPS data can be stored to memory in little-endian and big-endian format. The line length sent through the CSI2 physical protocol is a multiple of 16 bits for odd lines and 32 bits for even lines.

For correct pixel reconstruction, the line length must be a multiple of 3 32 bits and the number of lines must be even. Figure 11-377 shows the storage format for YUV4:2:0 8-bit + CSPS data. Set the CSI2_CTX_CTRL2_i[9:0] FORMAT bit field to 0x1C to select YUV4:2:0 8-bit + CSPS mode.

Copyright © 2025 Texas Instruments Incorporated

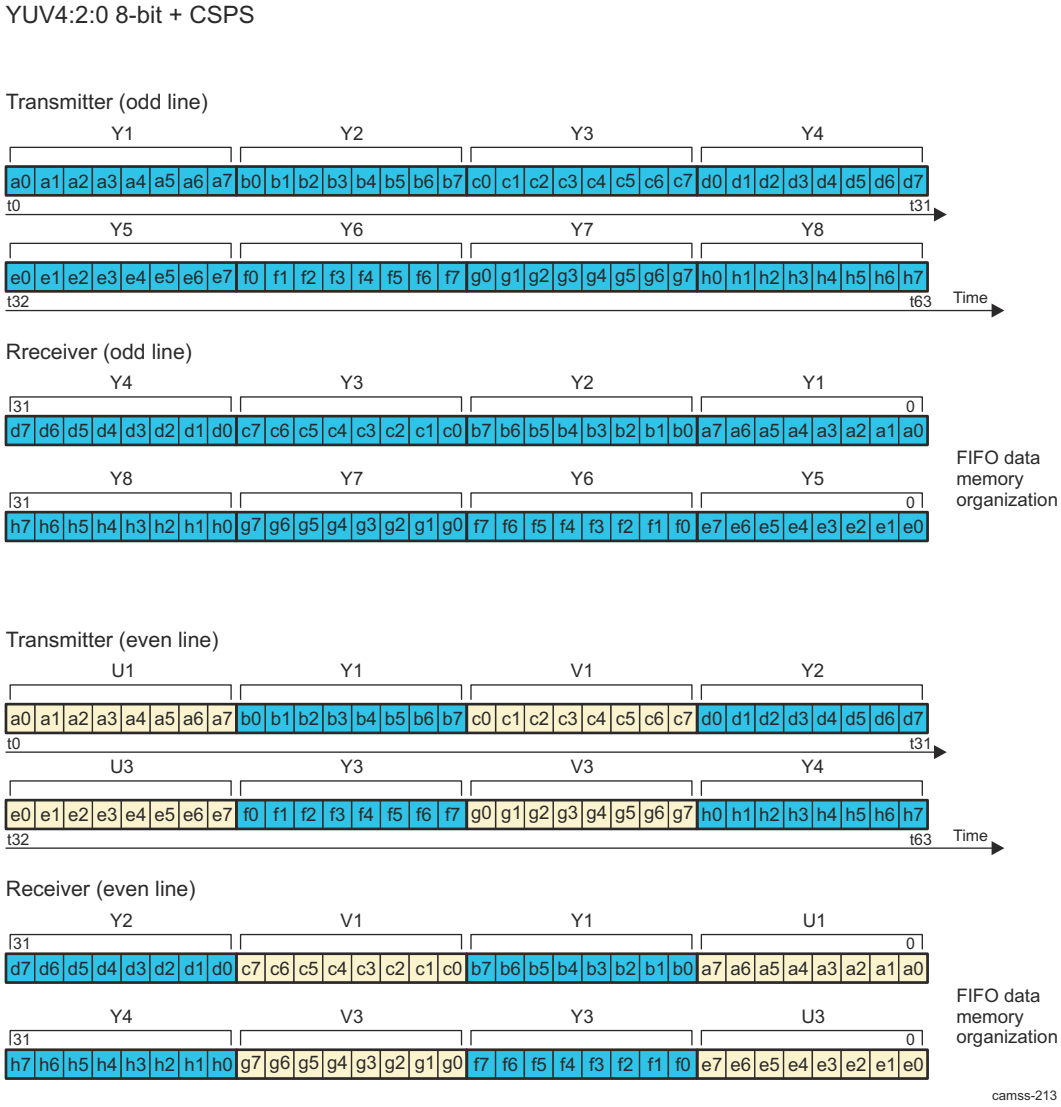

Figure 11-377. CSI2 YUV4:2:0 8-Bit + CSPS

11.6.1.1.3.1.1.4.1.5 CSI2 Byte Swap

The CSI2 receiver incorporates a byte-swapping function. Software can optionally enable byte-swapping of the payload data by setting the CSI2_CTx_CTRL1[31] BYTESWAP bit. This feature must be used only when the amount of payload data per packet is a multiple of 16 bits. The byte-swapping is performed before pixel reconstruction.

Copyright © 2025 Texas Instruments Incorporated

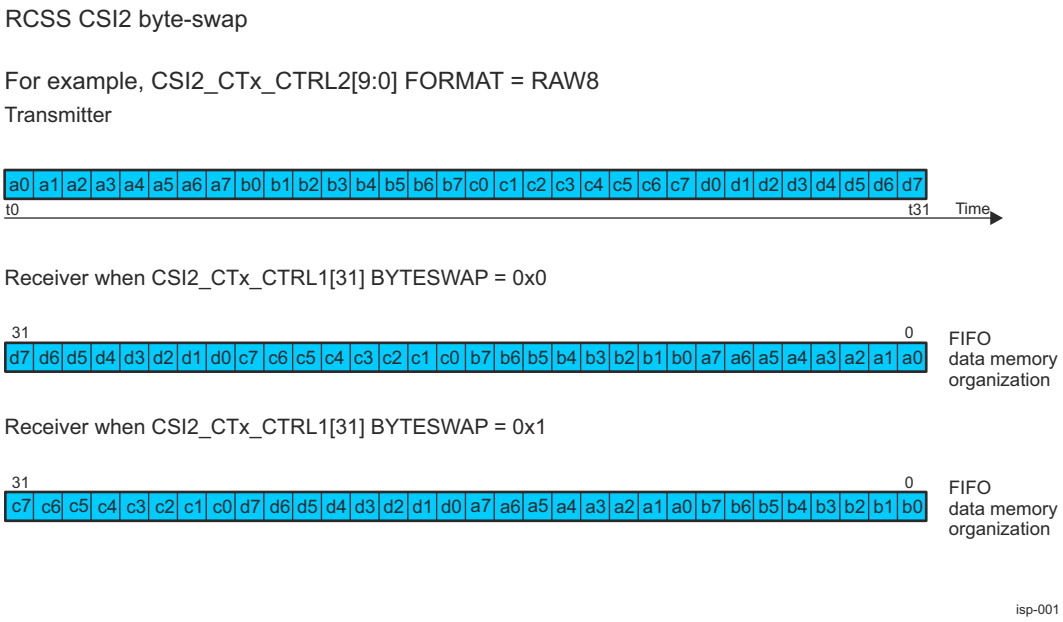

Figure 11-378. CSI2 Byte Swap

11.6.1.1.3.1.1.4.1.6 CSI2 YUV4:2:0 10-Bit + CSPS

YUV4:2:0 10-bit CSPS data can be stored to memory in little-endian and big-endian format. The line length sent through the CSI2 physical protocol is a multiple of 40 bits for odd lines and 80 bits for even lines.

For correct pixel reconstruction, the line length must be a multiple of 3 32 bits and the number of lines must be even. Figure 11-379 shows the storage format for YUV4:2:0 10-bit + CSPS data. Set the CSI2_CTX_CTRL2_i[9:0] FORMAT bit field to 0x1D to select YUV4:2:0 10-bit + CSPS mode.

Copyright © 2025 Texas Instruments Incorporated

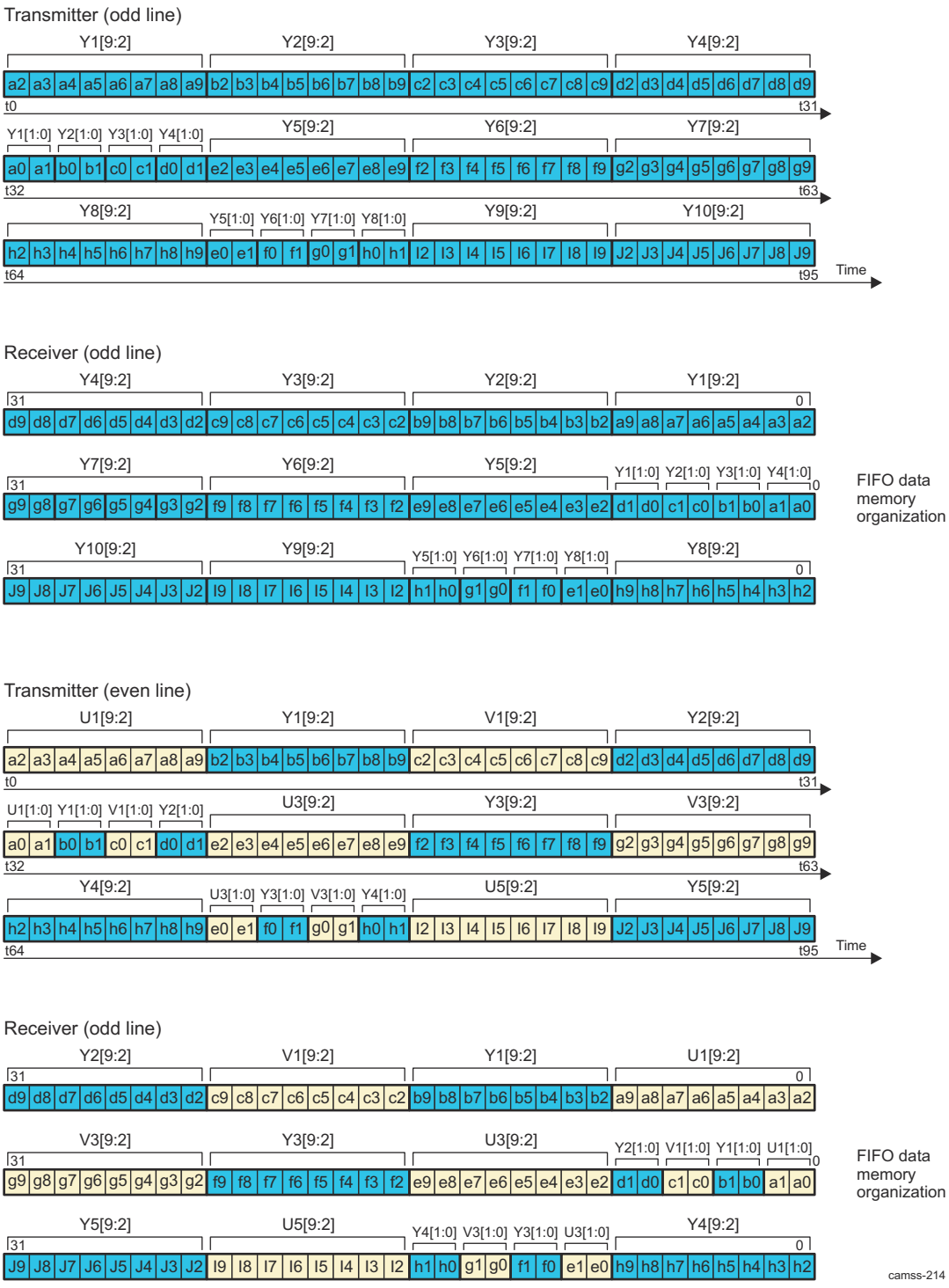

Figure 11-379. CSI2 YUV4:2:0 10-Bit + CSPS

11.6.1.1.3.1.1.4.1.7 CSI2 YUV4:2:2 8-Bit

YUV4:2:2 data can be stored to memory in little-endian and big-endian format. To set the endianness for YUV4:2:2 use the CSI2_CTRL[4] ENDIANNESS bit. The line length sent through the CSI2 physical

Copyright © 2025 Texas Instruments Incorporated

protocol is a multiple of 32 bits. Figure 11-380 shows the storage format for YUV4:2:2 8-bit data. Set the CSI2_CTX_CTRL2_i[9:0] FORMAT bit field to 0x1E to select YUV4:2:2 8-bit mode.

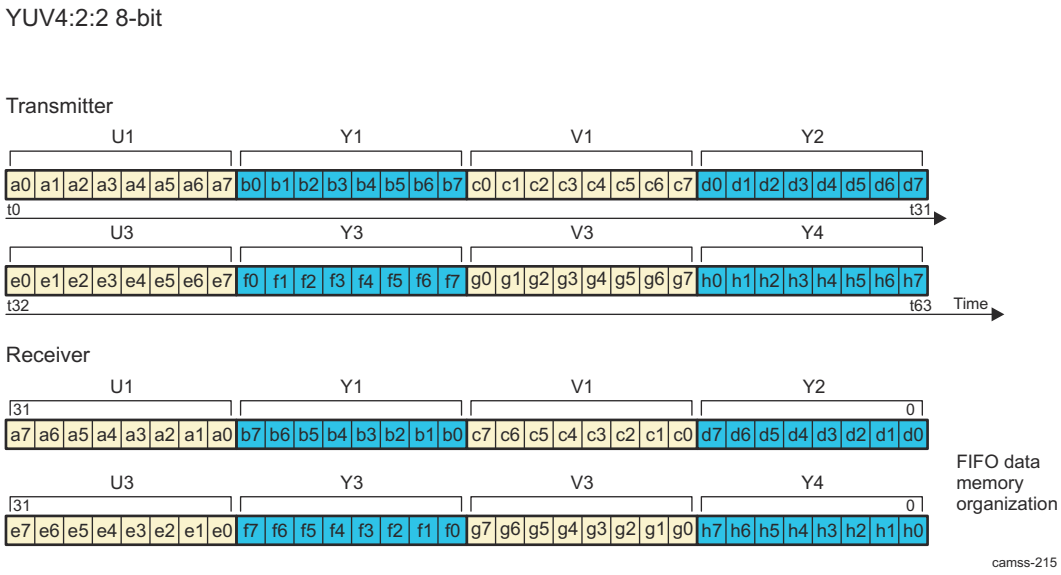

Figure 11-380. CSI2 YUV4:2:2 8-Bit

11.6.1.1.3.1.1.4.1.8 CSI2 YUV4:2:2 10-Bit

YUV4:2:2 data can be stored to memory in little-endian and big-endian format. The line length sent through the CSI2 physical protocol is a multiple of 40 bits. Figure 11-381 shows the storage format for YUV4:2:2 10-bit data. Set the CSI2_CTX_CTRL2_i[9:0] FORMAT bit field to 0x1F to select YUV4:2:2 10-bit mode.

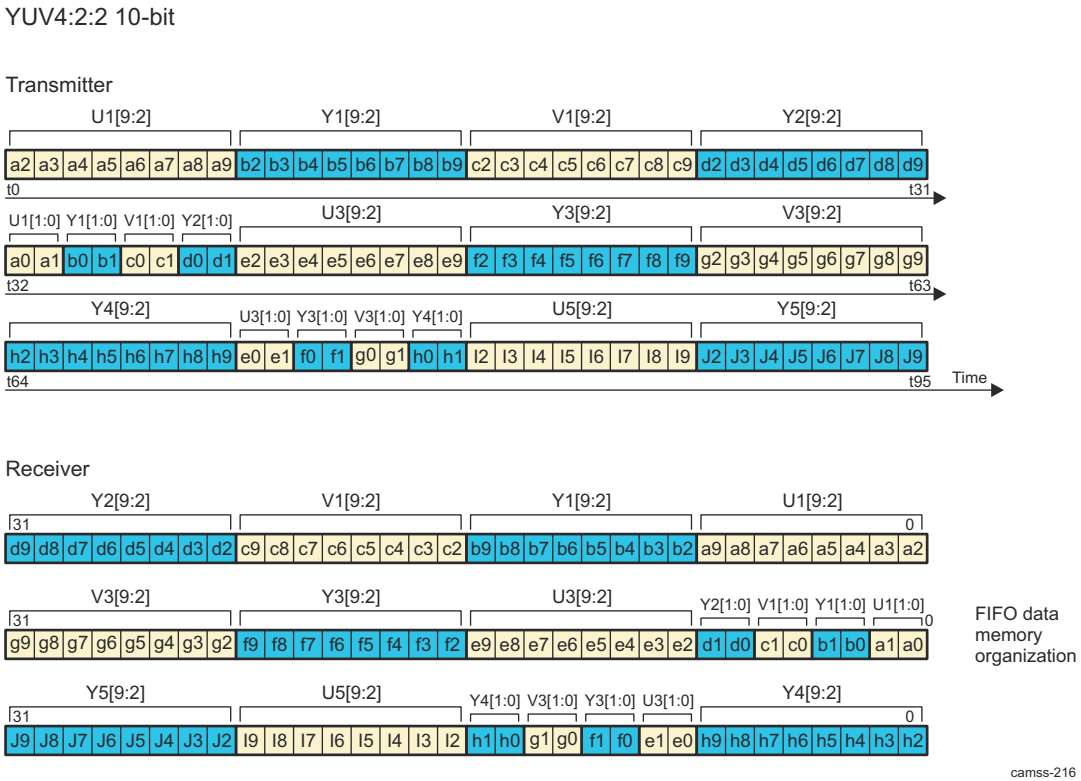

Figure 11-381. CSI2 YUV4:2:2 10-Bit

Copyright © 2025 Texas Instruments Incorporated

11.6.1.1.3.1.1.4.2 CSI2 RGB Operating Modes

11.6.1.1.3.1.1.4.2.1 CSI2 RGB565

RGB565 data is output to memory without data expansion. The line length sent through the CSI2 physical layer is always a multiple of 16 bits. Figure 11-382 shows the storage format for RGB565 data. Set the CSI2_CTX_CTRL2_i[9:0] FORMAT bit field to 0x22 to select RGB565 mode.

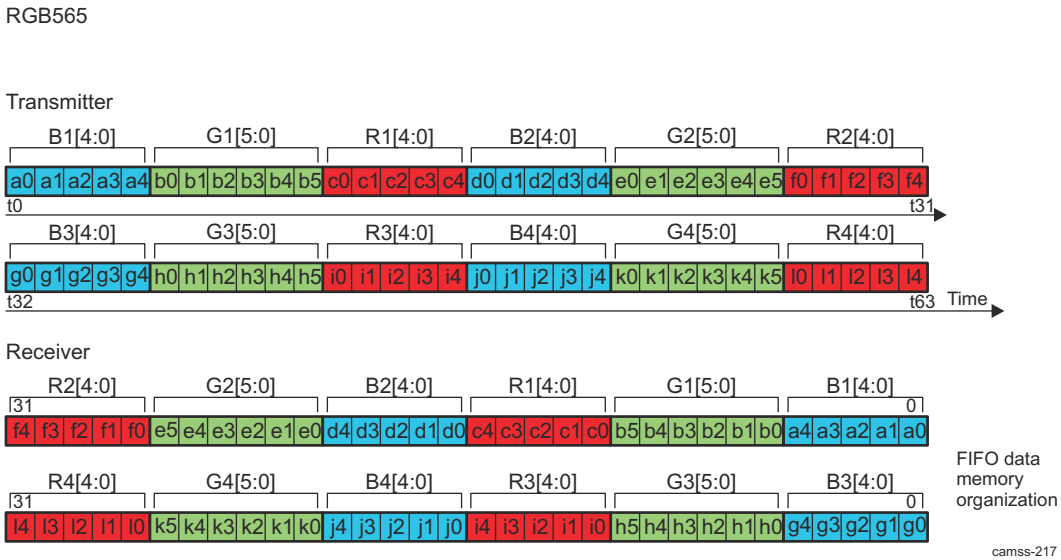

Figure 11-382. CSI2 RGB565

11.6.1.1.3.1.1.4.2.2 CSI2 RGB888

RGB888 data can be output to memory in two formats: with or without data expansion. If data expansion is used, the value of the 8 upper bits is programmable and can be set with an alpha value for computer graphics applications (the CSI2_CTX_CTRL3_i[29:16] ALPHA bit field). Figure 11-383 shows the storage format for RGB888 data. Set the CSI2_CTX_CTRL2_i[9:0] FORMAT bit field to 0x24 to select RGB888 mode.

Copyright © 2025 Texas Instruments Incorporated

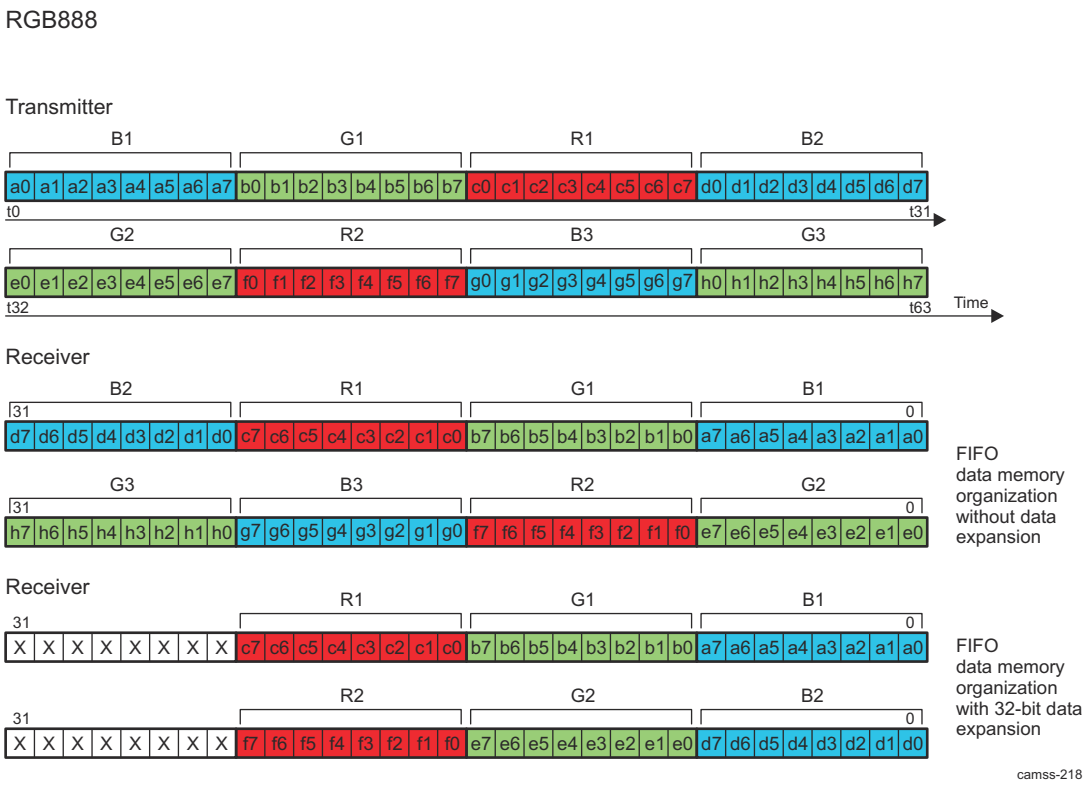

Figure 11-383. CSI2 RGB888

11.6.1.1.3.1.1.4.2.3 CSI2 RGB666

RGB666 data is always output to memory with data expansion. The value of the 14 upper bits is programmable and can be set with an alpha value for computer graphics applications (the CSI2_CTX_CTRL3_i[29:16] ALPHA bit field). The line length sent through the CSI2 physical protocol is a multiple of 8 bits. Furthermore, the line length is a multiple of 9 × 8 bits to finish the pixel reconstruction correctly. Figure 11-384 shows the storage format for RGB666 data. Set the CSI2_CTX_CTRL2_i[9:0] FORMAT bit field to 0x33 to select RGB666 mode.

Copyright © 2025 Texas Instruments Incorporated

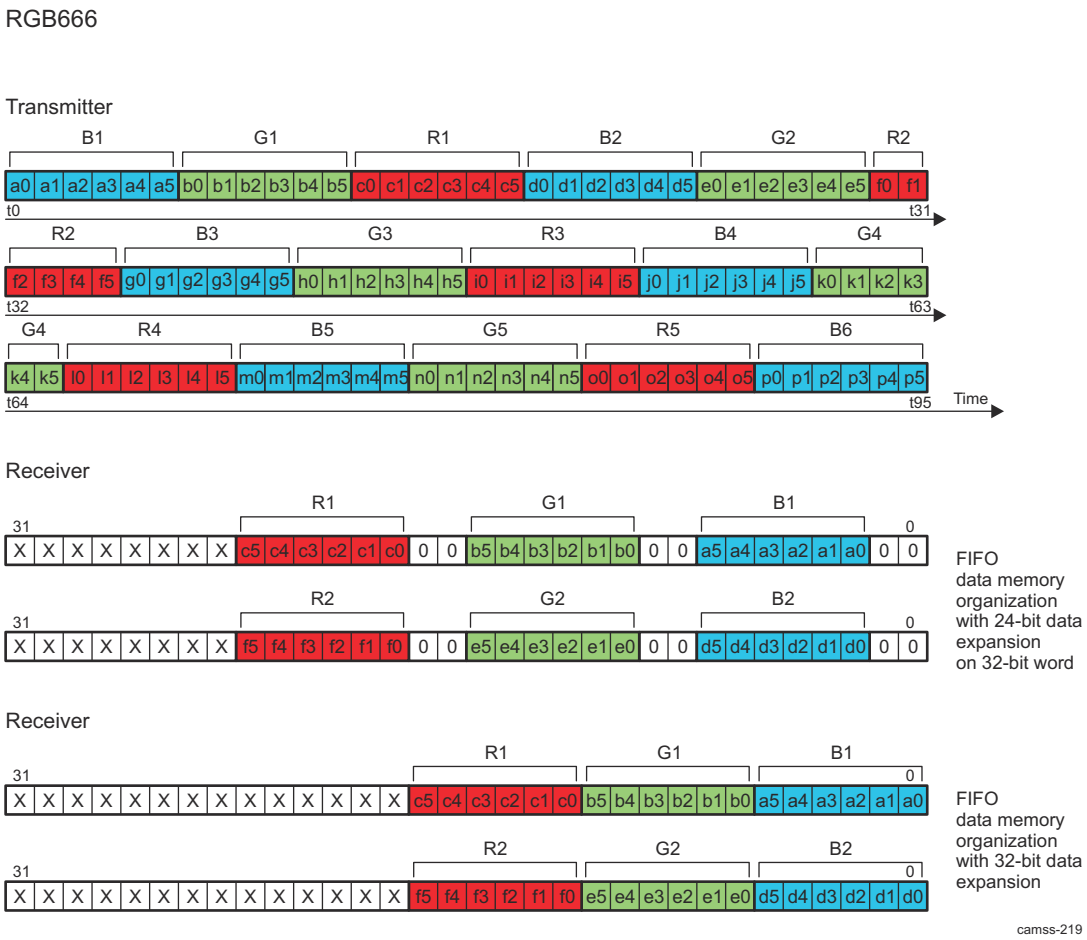

Figure 11-384. CSI2 RGB666

11.6.1.1.3.1.1.4.2.4 CSI2 RGB444

RGB444 data is output to memory with data expansion. When data expansion is used, the value of the 4 upper bits is programmable and can be set with an alpha value for computer graphics applications (the CSI2_CTX_CTRL3_i[29:16] ALPHA bit field). Figure 11-385 shows the storage format for RGB444 data. Set the CSI2_CTX_CTRL2_i[9:0] FORMAT bit field to 0xA0 to select RGB444 mode.

Copyright © 2025 Texas Instruments Incorporated

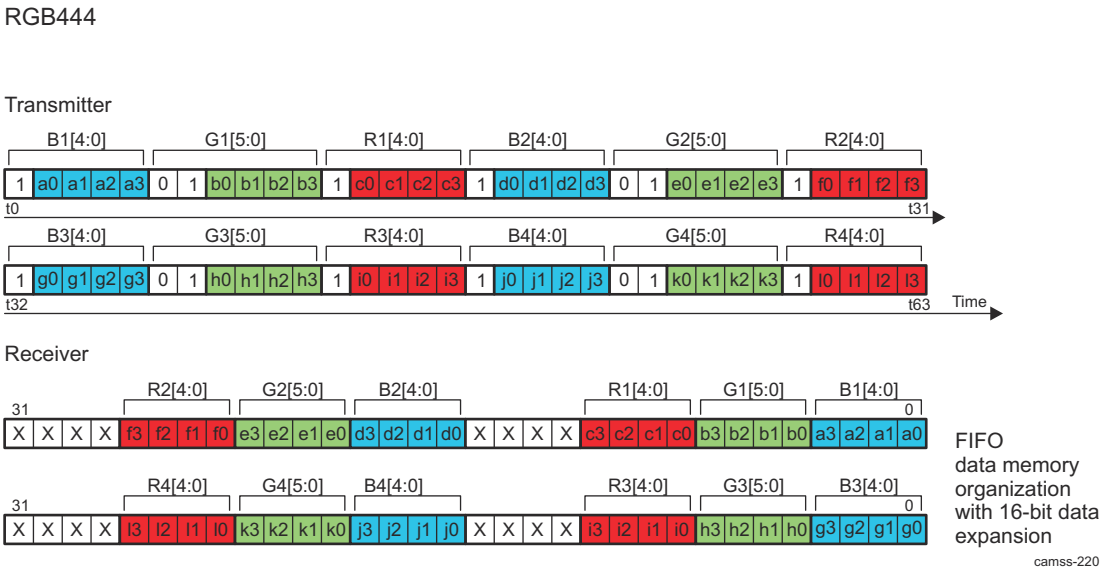

Figure 11-385. CSI2 RGB444

11.6.1.1.3.1.1.4.2.5 CSI2 RGB555

RGB555 data is output to memory with data expansion. Figure 11-386 shows the storage format for RGB555 data. Set the CSI2_CTX_CTRL2_i[9:0] FORMAT bit field to 0xA1 to select RGB555 mode.

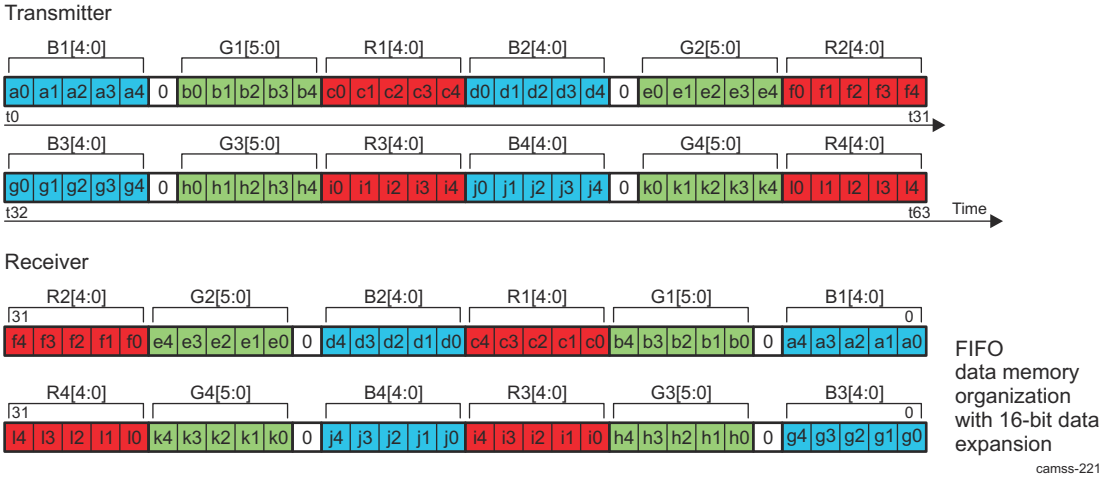

Figure 11-386. CSI2 RGB555

11.6.1.1.3.1.1.4.3 CSI2 RAW Bayer RGB Operating Modes

11.6.1.1.3.1.1.4.3.1 CSI2 RAW6

RAW6 data can be output to memory with or without data expansion. The line length sent through the CSI2 physical layer is a multiple of 8 bits (6-bit image data + 2-bit expansion). Furthermore, the line length is a multiple of 3 × 8 bits to complete the pixel reconstruction correctly (the lowest common multiple of 8 and 6 is 24, so 3 × 8 bits). Figure 11-387 shows the storage format for RAW6 data. Set the CSI2_CTX_CTRL2_i[9:0] FORMAT bit field as follows:

- To 0x28 to select RAW6 mode
- To 0x68 for RAW6 + 8-bit expansion

Copyright © 2025 Texas Instruments Incorporated

- To 0x2A8 for RAW6 + DPCM decompression to 10-bit expanded to 16-bit
- To 0x3A8 for RAW6 + DPCM decompression to 12-bit expanded to 16-bit

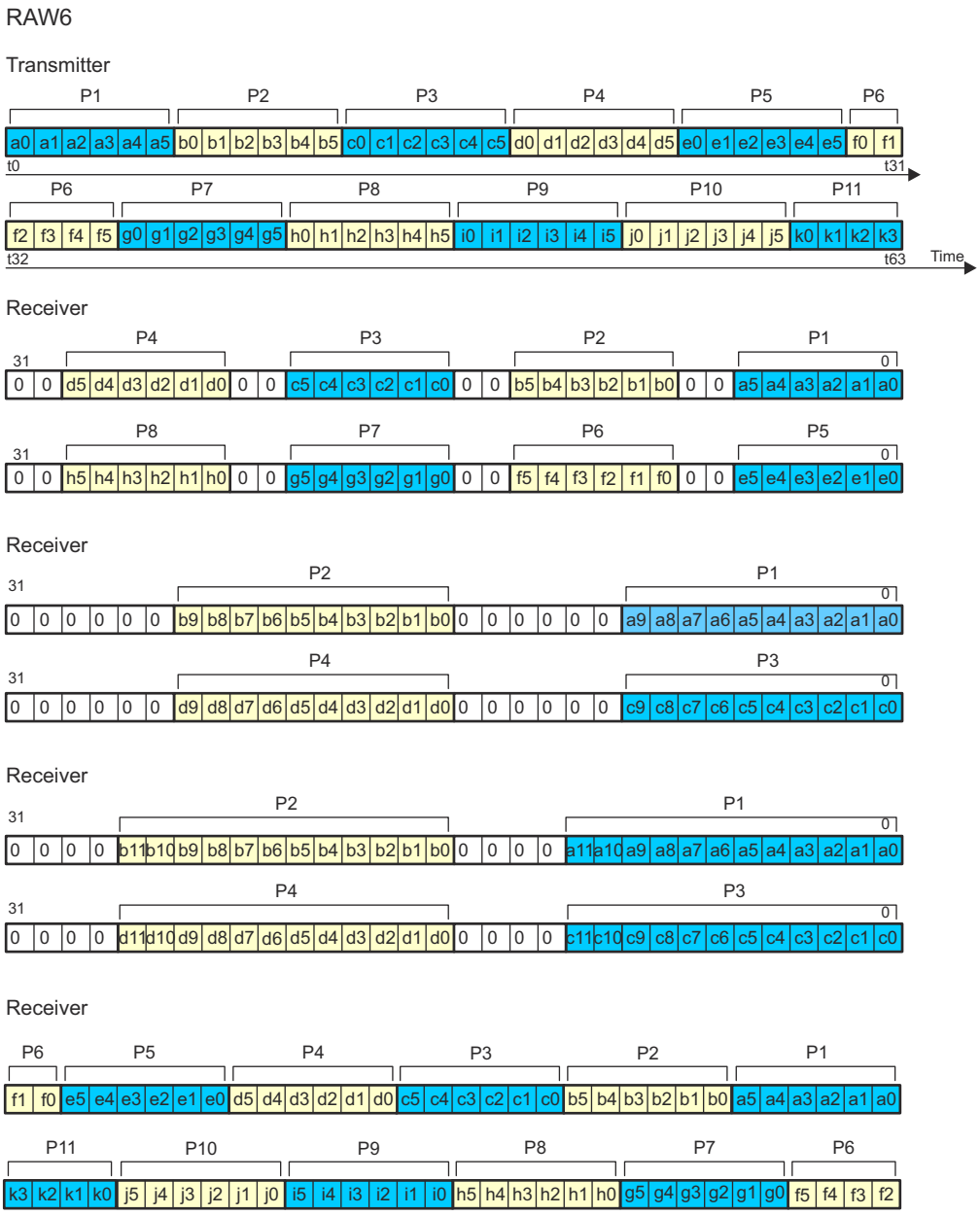

Figure 11-387. CSI2 RAW6

11.6.1.1.3.1.1.4.3.2 CSI2 RAW7

RAW7 data can be output to memory with or without data expansion. The line length sent through the CSI2 physical layer is a multiple of 8 bits. Furthermore, the line length is a multiple of 7 × 8 bits to complete the pixel reconstruction correctly (the lowest common multiple of 8 and 7 is 56, so 7 × 8 bits). Figure 11-388 shows the storage format for RAW7 data. Set the CSI2_CTX_CTRL2_i[9:0] FORMAT bit field as follows:

- To 0x29 to select RAW7 mode
- To 0x69 for RAW7 + 8-bit expansion
- To 0x229 for RAW7 + DPCM decompression to 10-bit expanded to 16-bit
- To 0x369 for RAW7 + DPCM decompression to 12-bit expanded to 16-bit

Copyright © 2025 Texas Instruments Incorporated

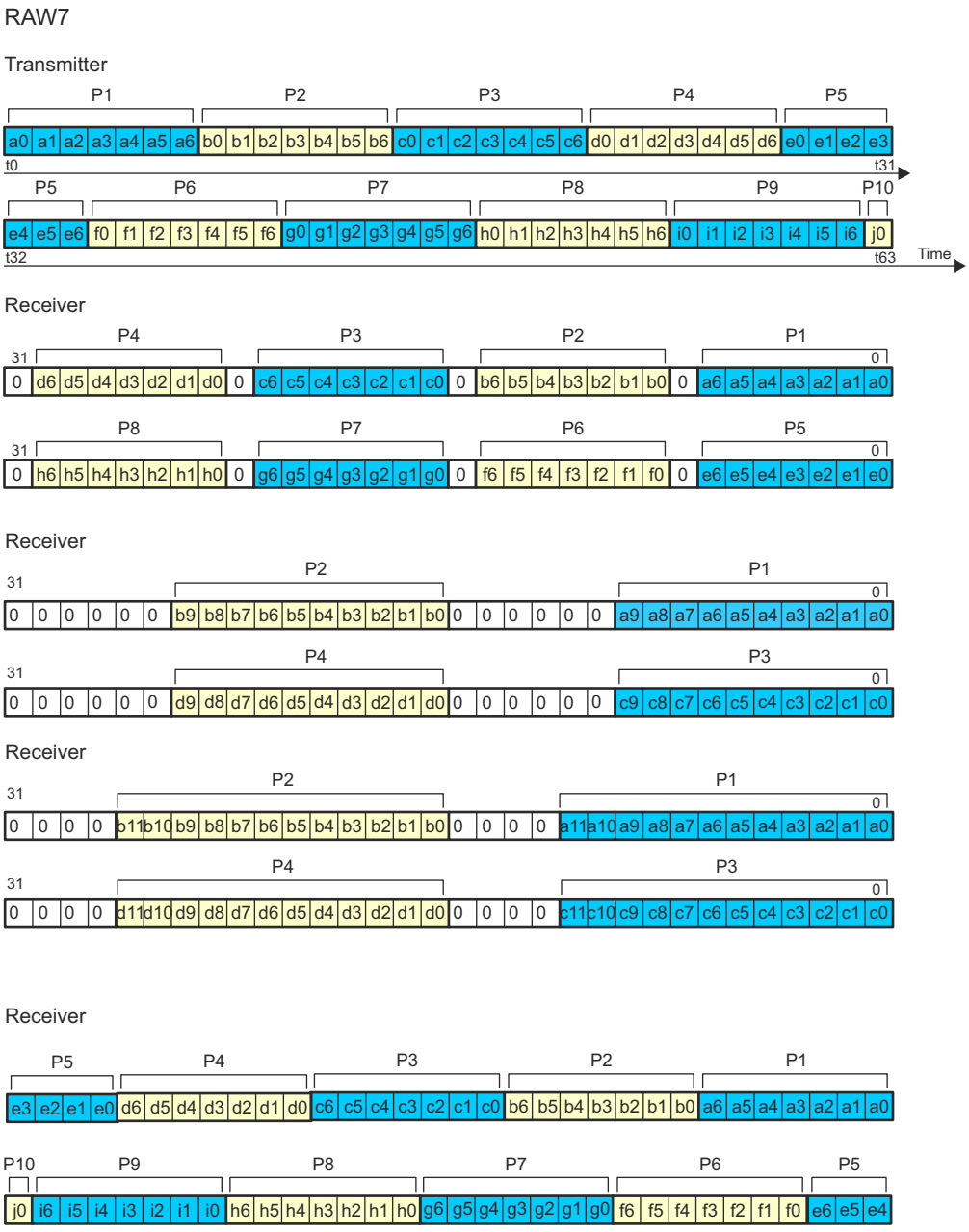

Figure 11-388. CSI2 RAW7

11.6.1.1.3.1.1.4.3.3 CSI2 RAW8

RAW8 data can be output to memory with or without data expansion. The line length sent through the CSI2 physical layer is always a multiple of 8 bits. Figure 11-389 shows the storage format for RAW8 data. Set the CSI2_CTX_CTRL2_i[9:0] FORMAT bit field as follows:

- To 0x2A to select RAW8 mode
- To 0x2AA for RAW8 + DPCM decompression to 10-bit expanded to 16-bit
- To 0x36A for RAW8 + DPCM decompression to 12-bit expanded to 16-bit

Copyright © 2025 Texas Instruments Incorporated

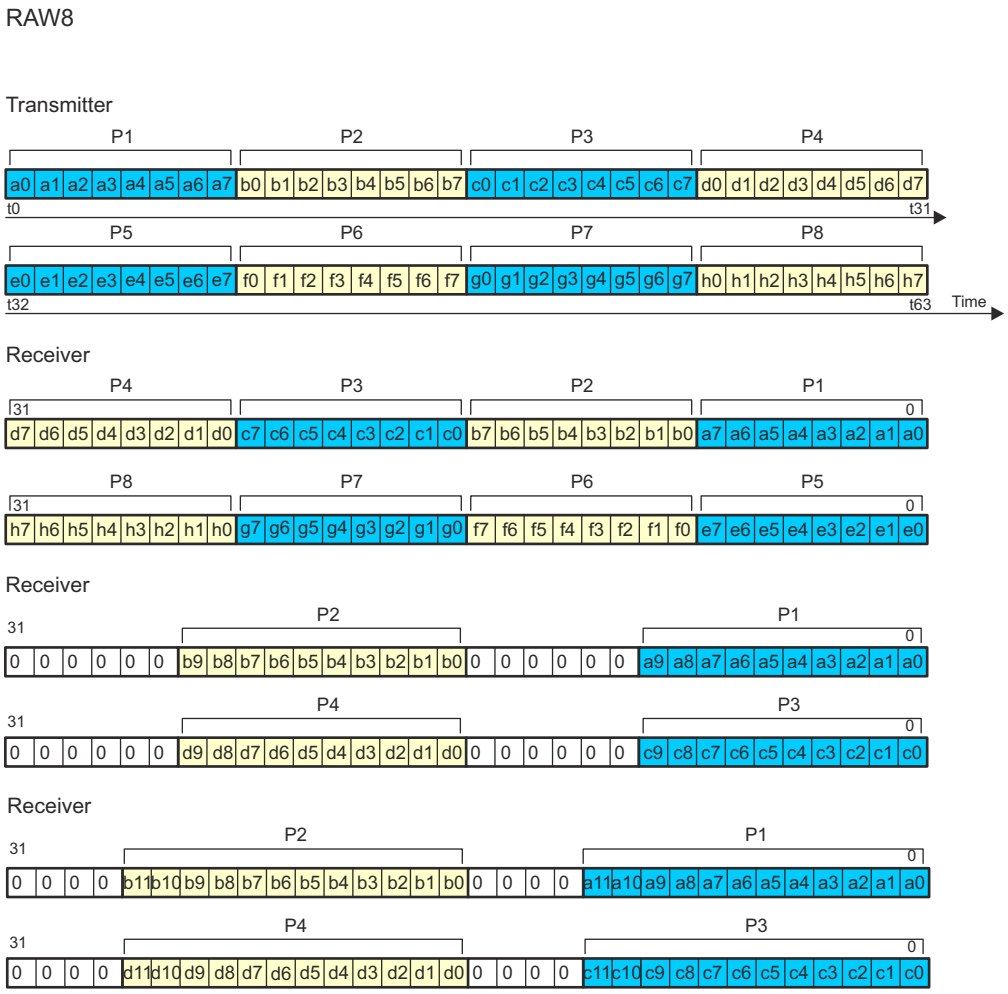

Figure 11-389. CSI2 RAW8

11.6.1.1.3.1.1.4.3.4 CSI2 RAW10

RAW10 data can be output memory in two formats: with or without data expansion. If data expansion is used, the 10-bit data are padded with 0s on a 16-bit word. The line length sent through the CSI2 physical layer is a multiple of 8 bits. Furthermore, the line length is a multiple of 5 × 8 bits to complete the pixel reconstruction correctly (the lowest common multiple of 8 and 10 is 40, so 5 × 8 bits). Figure 11-390 shows the storage format for RAW10 data. Set the CSI2_CTX_CTRL2_i[9:0] FORMAT bit field as follows:

- To 0x2B to select RAW10 mode
- To 0xAB for RAW10 + 16-bit expansion

Copyright © 2025 Texas Instruments Incorporated

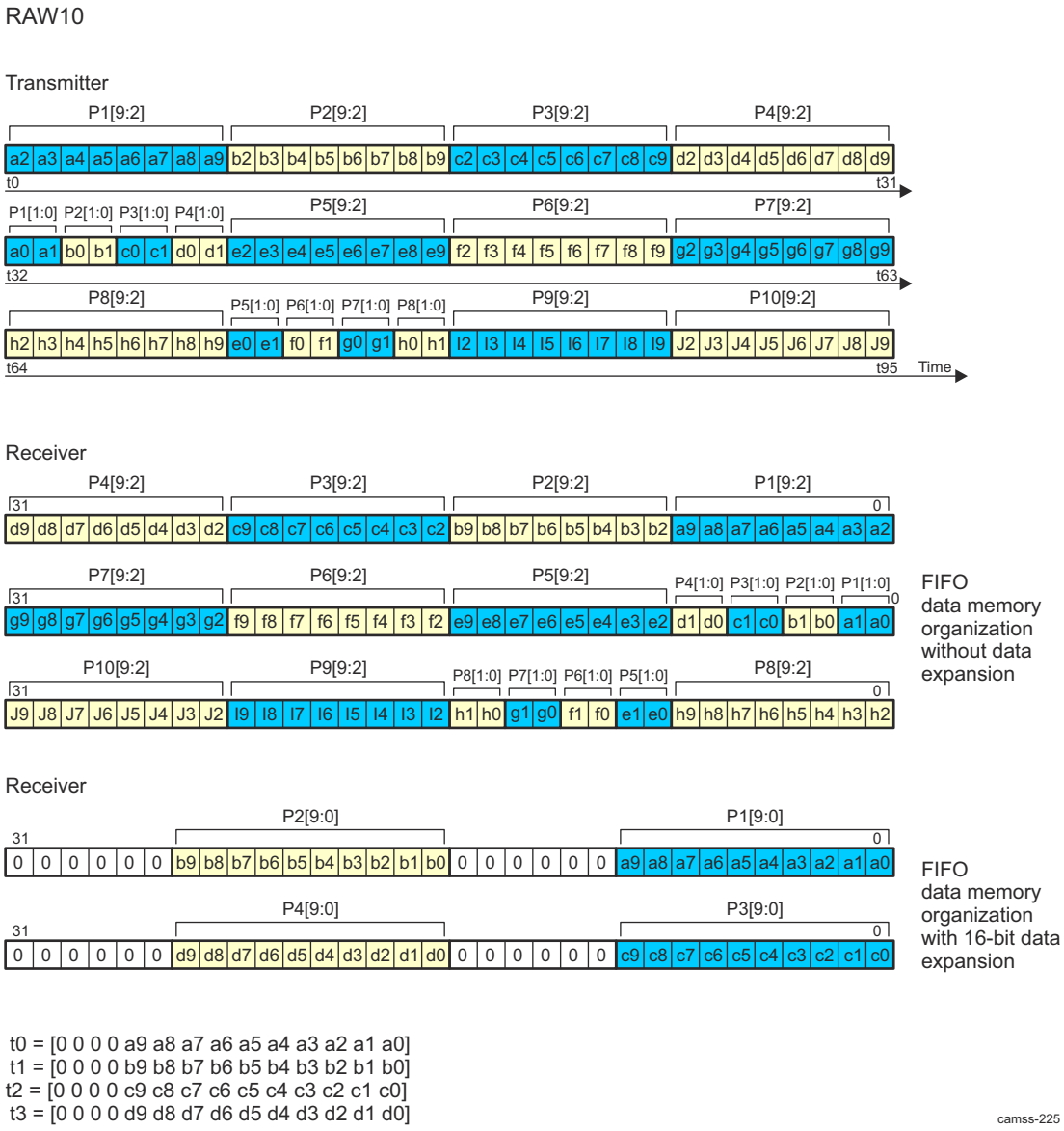

Figure 11-390. CSI2 RAW10

11.6.1.1.3.1.1.4.3.5 CSI2 RAW12

RAW12 data can be output to memory in two formats: with or without data expansion. If data expansion is used, the 12-bit data are padded with 0s on a 16-bit word. The line length sent through the CSI2 physical layer is a multiple of 8 bits. Furthermore, the line length is a multiple of 3 × 8 bits to complete the pixel reconstruction correctly (the lowest common multiple of 8 and 12 is 24, so 3 × 8 bits). Figure 11-391 shows the storage format for RAW12 data. Set the CSI2_CTX_CTRL2_i[9:0] FORMAT bit field as follows:

- To 0x2C to select RAW12 mode
- To 0xAC for RAW12 + 16-bit expansion

Copyright © 2025 Texas Instruments Incorporated

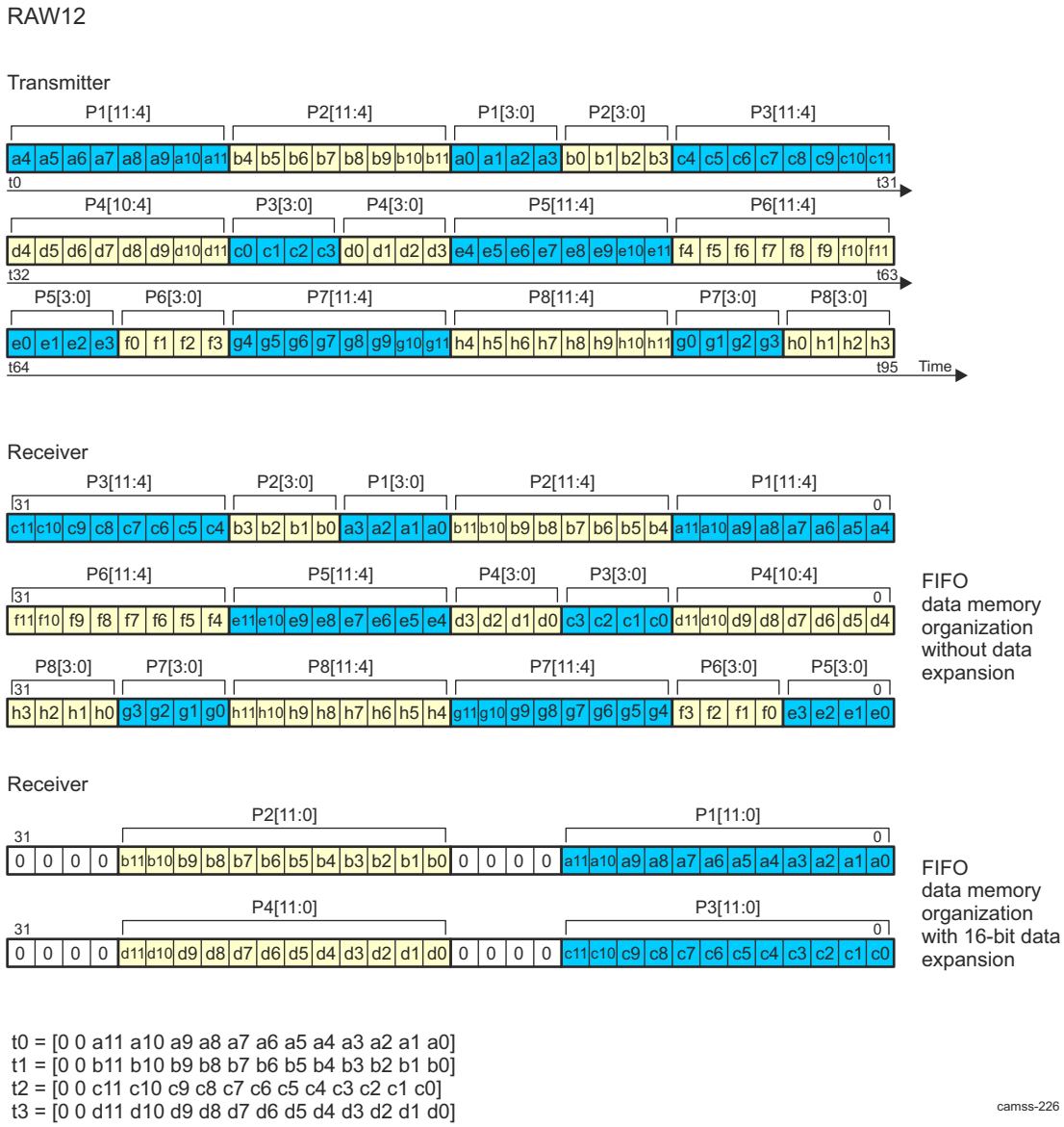

Figure 11-391. CSI2 RAW12

11.6.1.1.3.1.1.4.3.6 CSI2 RAW14

RAW14 data can be output to memory in two formats: with or without data expansion. If data expansion is used, the 14-bit data are padded with 0s on a 16-bit word. The line length sent through the CSI2 physical layer is a multiple of 8 bits. Furthermore, the line length is a multiple of 7 × 8 bits to complete the pixel reconstruction correctly (the lowest common multiple of 8 and 14 is 56, so 7 × 8 bits). Figure 11-392 shows the storage format for RAW14 data. Set the CSI2_CTX_CTRL2_i[9:0] FORMAT bit field as follows:

- To 0x2D to select RAW14 mode
- To 0xAD for RAW14 + 16-bit expansion

Copyright © 2025 Texas Instruments Incorporated

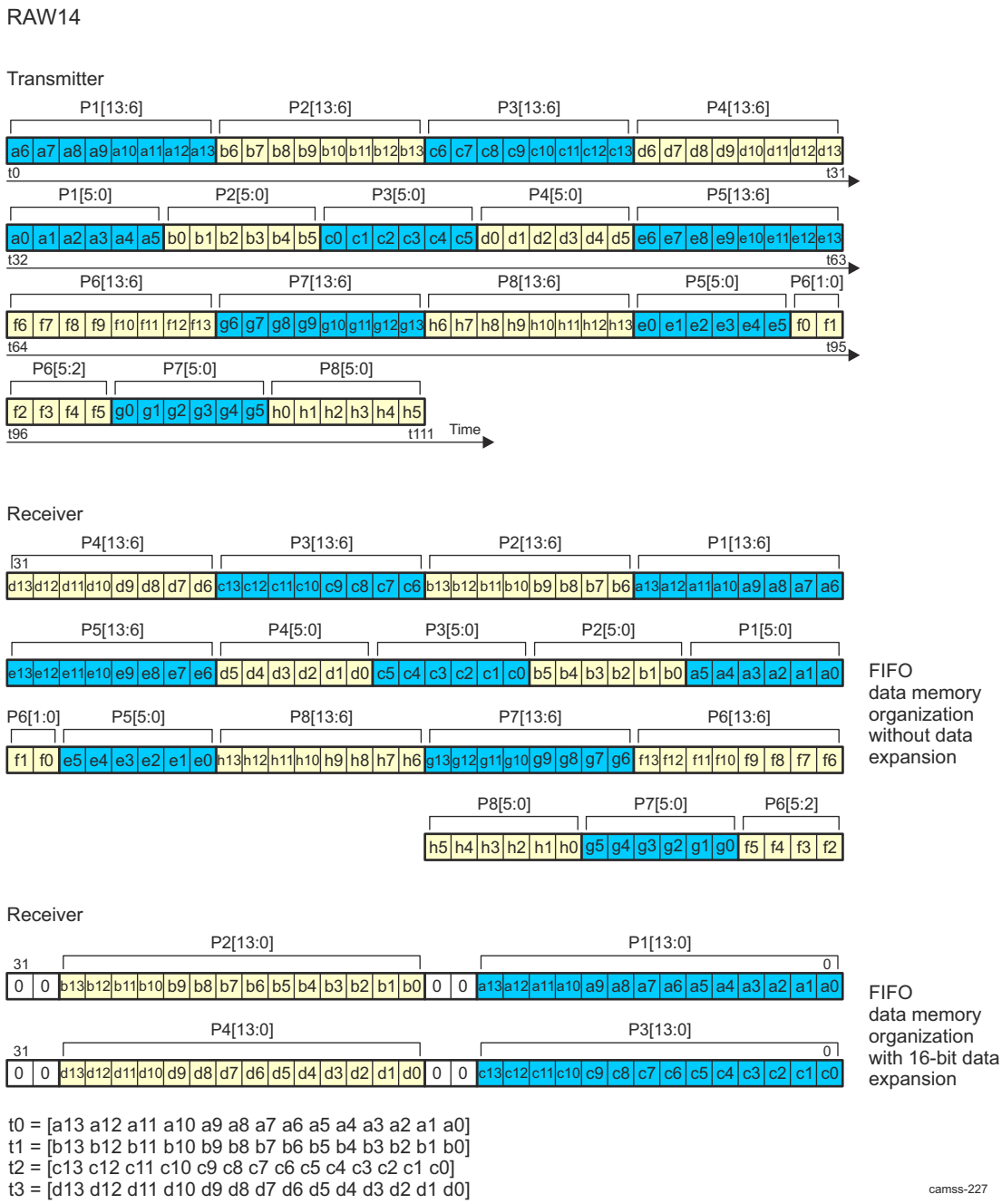

Figure 11-392. CSI2 RAW14

11.6.1.1.3.1.1.4.4 CSI2 JPEG8 Operating Modes

The size of a compressed stream can be known in advance. Figure 11-393 shows the format for storing JPEG8 data.

Copyright © 2025 Texas Instruments Incorporated

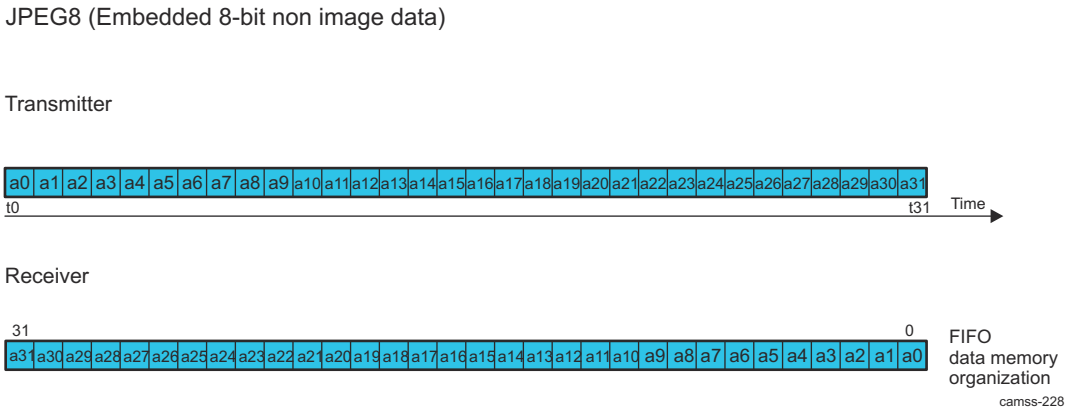

Figure 11-393. CSI2 JPEG8

11.6.1.1.3.1.1.4.5 CSI2 Generic Format

The CSI2 receiver supports a generic format to send data to memory. The generic mode is entered by setting the CSI2_CTX_CTRL1_i[30] GENERIC bit. The CSI2_CTX_CTRL2_i[9:0] FORMAT bit field defines how the data stream is decoded. When generic mode is enabled (GENERIC = 1), the MIPI data type code is ignored and data is decoded using the FORMAT bit. Whatever the MIPI data type code, it is ignored (the data stream is processed even if the FORMAT bit does not match the MIPI data type code.) When generic mode is not used (GENERIC = 0), the data stream is processed only when the MIPI data type code matches the FORMAT setting of the enabled context. If not matched, the data stream is not processed by the CSI2 engine. Only the virtual channel information is used to map a received data stream to a context. Software must ensure that a MIPI virtual channel used in generic mode is mapped only to a single context.

Figure 11-394 shows the CSI2 generic format.

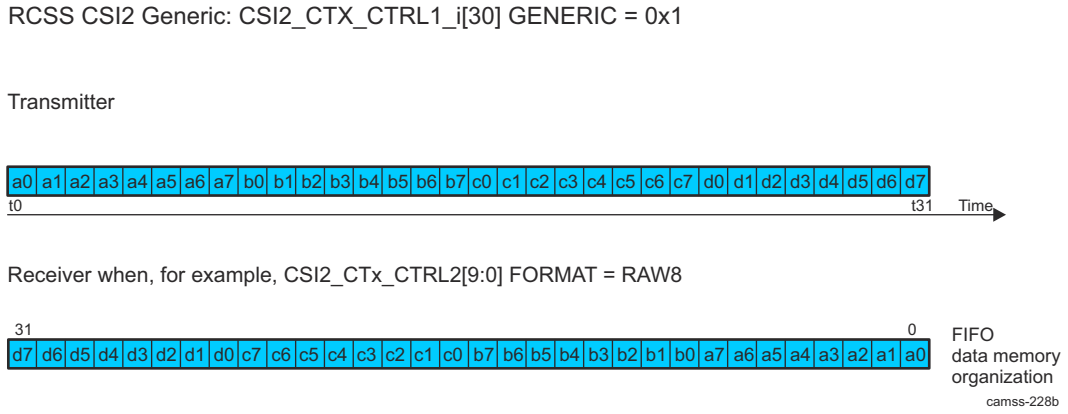

Figure 11-394. CSI2 Generic Format

11.6.1.1.3.1.1.4.6 CSI2 MIPI Format Supported Summary

Table 11-1424 summarizes the CSI2 MIPI-supported formats and their output category. By setting the CSI2_CTX_CTRL2_i register format, the CSI2 outputs certain types of pixel packet data.

Table 11-1424. CSI2 MIPI Format Supported by the Protocol Engine

MIPI			CSI2 Protocol Engine Support
Category	**Abbreviation**	**Register Setting Format Description**	**Configuration Value for CSI2_CTX_CTRL2_i[9:0] FORMAT**
Sync short packet data types(1)	Short packet sync code	Mandatory FSC	0x000
	Short packet sync code	Mandatory FEC	0x001

Copyright © 2025 Texas Instruments Incorporated

Table 11-1424. CSI2 MIPI Format Supported by the Protocol Engine (continued)

MIPI			CSI2 Protocol Engine Support
Category	**Abbreviation**	**Register Setting Format Description**	**Configuration Value for CSI2_CTX_CTRL2_i[9:0] FORMAT**
	Short packet sync code	Optional LSC	0x002
	Short packet sync code	Optional LEC	0x003
			0x004
			0x005
			0x006
			0x007
Generic short packet data types(1)	Short packet	32-bit without ECC is stored in a register with code value 0x008.	0x008
	Short packet	32-bit without ECC is stored in a register with code value 0x009.	0x009
	Short packet	32-bit without ECC is stored in a register with code value 0x00A.	0x00A
	Short packet	32-bit without ECC is stored in a register with code value 0x00B.	0x00B
	Short packet	32-bit without ECC is stored in a register with code value 0x00C.	0x00C
	Short packet	32-bit without ECC is stored in a register with code value 0x00D.	0x00D
	Short packet	32-bit without ECC is stored in a register with code value 0x00E.	0x00E
	Short packet	32-bit without ECC is stored in a register with code value 0x00.	0x00F
Generic Long packet data types(2)	Null	Discarded	0x010
	Blanking data	Discarded	0x011
	Embedded 8-bit nonimage data (for example, JPEG)	0x12: Embedded 8-bit nonimage data (for example, JPEG)	0x012
		Send to memory when FORMAT = 0	0x013
		Send to memory when FORMAT = 0	0x014
		Send to memory when FORMAT = 0	0x015
		Send to memory when FORMAT = 0	0x016
		Send to memory when FORMAT = 0	0x017
YUV data	YUV4:2:0 8-bit	YUV4:2:0 8-bit	0x018
	YUV4:2:0 10-bit	YUV4:2:0 10-bit	0x019
	YUV4:2:0 8-bit legacy	YUV4:2:0 8-bit legacy	0x01A
	Reserved	Send to memory when FORMAT = 0	0x01B
	YUV4:2:0 8-bit + CSPS	YUV4:2:0 8 bit + CSPS	0x01C
	YUV4:2:0 10-bit + CSPS	YUV4:2:0 10 bit + CSPS	0x01D
	YUV4:2:2 8-bit	YUV4:2:2 8-bit	0x01E
	YUV4:2:2 10-bit	YUV4:2:2 10-bit	0x01F
RGB data	RGB444	RGB444 + EXP16	0x0A0
	RGB555	RGB555 + EXP16	0x0A1

Copyright © 2025 Texas Instruments Incorporated

Table 11-1424. CSI2 MIPI Format Supported by the Protocol Engine (continued)

MIPI			CSI2 Protocol Engine Support
Category	**Abbreviation**	**Register Setting Format Description**	**Configuration Value for CSI2_CTX_CTRL2_i[9:0] FORMAT**
	RGB565	RGB565	0x022
	RGB666	RGB666 + EXP32	0x0E3
		RGB666 + EXP32_24	0x033
	RGB888	RGB888	0x024
		RGB888 + EXP32	0x0E4
	Reserved	Send to memory when FORMAT = 0	0x025
	Reserved	Send to memory when FORMAT = 0	0x026
	Reserved	Send to memory when FORMAT = 0	0x027
RAW data	RAW6	RAW6	0x028
		RAW6 + EXP8	0x068
		RAW6 + DPCM10 + EXP16	0x2A8
		RAW6 + DPCM12 + EXP16	0x3A8
	RAW7	RAW7	0x029
		RAW7 + EXP8	0x069
		RAW7 + DPCM10 + EXP16	0x229
		RAW7 + DPCM10 + VP	0x329
		RAW7 + DPCM12 + EXP16	0x369
	RAW8	RAW8	0x02A
		RAW8 + DPCM10 + EXP16	0x2AA
		RAW8 + DPCM10 + VP	0x32A
		RAW8 + DPCM12 + EXP16	0x36A
		RAW8 + DPCM12 + VP	0x3AA
	RAW10	RAW10	0x02B
		RAW10 + EXP16	0x0AB
	RAW12	RAW12	0x02C
		RAW12 + EXP16	0x0AC
	RAW14	RAW14	0x02D
		RAW14 + EXP16	0x0AD
	Reserved	Send to memory when FORMAT = 0	0x02E
	Reserved	Send to memory when FORMAT = 0	0x02F
User-defined byte-based data		USER_DEFINED_BYTE_DATA	0x040
		USER_DEFINED_BYTE_DATA + EXP8	0x080
		USER_DEFINED_BYTE_DATA + DPCM10 + EXP16	0x2C0
		USER_DEFINED_BYTE_DATA + DPCM12 + EXP16	0x1C0
		USER_DEFINED_BYTE_DATA	0x041
		USER_DEFINED_BYTE_DATA + EXP8	0x081
		USER_DEFINED_BYTE_DATA + DPCM10 + EXP16	0x2C1
		USER_DEFINED_BYTE_DATA + DPCM12 + EXP16	0x1C1
		USER_DEFINED_BYTE_DATA	0x042
		USER_DEFINED_BYTE_DATA + EXP8	0x082

Copyright © 2025 Texas Instruments Incorporated

Table 11-1424. CSI2 MIPI Format Supported by the Protocol Engine (continued)

MIPI			CSI2 Protocol Engine Support
Category	**Abbreviation**	**Register Setting Format Description**	**Configuration Value for CSI2_CTX_CTRL2_i[9:0] FORMAT**
		USER_DEFINED_BYTE_DATA + DPCM10 + EXP16	0x2C2
		USER_DEFINED_BYTE_DATA + DPCM12 + EXP16	0x1C2
		USER_DEFINED_BYTE_DATA	0x043
		USER_DEFINED_BYTE_DATA + EXP8	0x083
		USER_DEFINED_BYTE_DATA + DPCM10 + EXP16	0x2C3
		USER_DEFINED_BYTE_DATA + DPCM12 + EXP16	0x1C3
		USER_DEFINED_BYTE_DATA	0x044
		USER_DEFINED_BYTE_DATA + EXP8	0x084
		USER_DEFINED_BYTE_DATA + DPCM10 + EXP16	0x2C4
		USER_DEFINED_BYTE_DATA + DPCM12 + EXP16	0x1C4
		USER_DEFINED_BYTE_DATA + DPCM12 + VP	0x144
		USER_DEFINED_BYTE_DATA	0x045
		USER_DEFINED_BYTE_DATA + EXP8	0x085
		USER_DEFINED_BYTE_DATA + DPCM10 + EXP16	0x2C5
		USER_DEFINED_BYTE_DATA + DPCM12 + EXP16	0x1C5
		USER_DEFINED_BYTE_DATA	0x046
		USER_DEFINED_BYTE_DATA + EXP8	0x086
		USER_DEFINED_BYTE_DATA + DPCM10 + EXP16	0x2C6
		USER_DEFINED_BYTE_DATA + DPCM12 + EXP16	0x1C6
		USER_DEFINED_BYTE_DATA	0x047
		USER_DEFINED_BYTE_DATA + EXP8	0x087
		USER_DEFINED_BYTE_DATA + DPCM10 + EXP16	0x2C7
		USER_DEFINED_BYTE_DATA + DPCM12 + EXP16	0x1C7
Reserved		Send to memory when FORMAT = 0	0x038
		Send to memory when FORMAT = 0	0x039
		Send to memory when FORMAT = 0	0x03A
		Send to memory when FORMAT = 0	0x03B
		Send to memory when FORMAT = 0	0x03C
		Send to memory when FORMAT = 0	0x03D
		Send to memory when FORMAT = 0	0x03E
		Send to memory when FORMAT = 0	0x03F

(1) To understand synchronization codes and short packets, see Section 11.6.1.1.3.3.2.3, *CSI2 Short Packet*.
(2) To understand synchronization codes and long packets, see Section 6.1.1.3.1.1.3.2, *CSI2 Long Packet*.

Copyright © 2025 Texas Instruments Incorporated

11.6.1.1.3.2 CSI2 Integration

Figure 11-395 is an overview of the integration of the CSI2-A/CSI2-B interface in the device. The figure is the top-level block diagram of the CSI2-A/CSI2-B receiver. The CSI2-A/CSI2-B receiver receives the serial data coming from a CSI2 compatible image sensor, converts it to parallel data, extracts the logical channels, detects and extracts the synchronization codes, reformats the data, and outputs it through the RCSS interconnect interface.

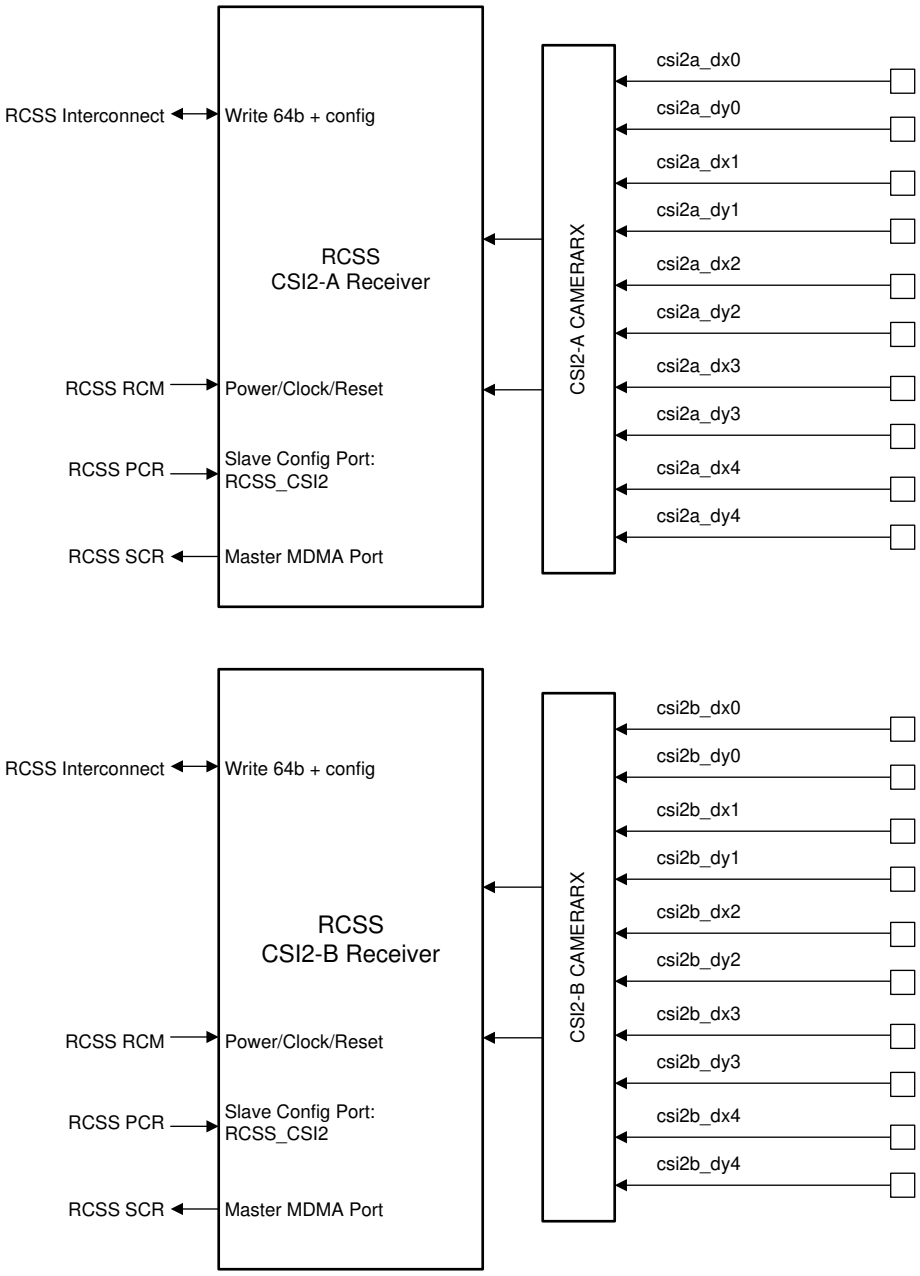

Figure 11-395. CSI2-A /CSI2-B Integration

The CSI2-A/CSI2-B receiver can send data directly to system memory using the master port.

For power domain, clocks, reset, and hardware requests, see Section 6.4.

Copyright © 2025 Texas Instruments Incorporated

11.6.1.1.3.3 CSI2 Functional Description

11.6.1.1.3.3.1 CSI2 Overview

Figure 11-396 is the CSI2-A/B receiver block diagram (it assumes there are four CSI2 image sensor data lines). The CSI2 receiver receives the byte data coming from a CSI2 D-PHY receiver (up to four data pairs), converts it to byte stream, detects and corrects errors, extracts the virtual channel ID, detects and extracts the synchronization codes, reformats the data, and outputs it through the RCSS interconnect interface.

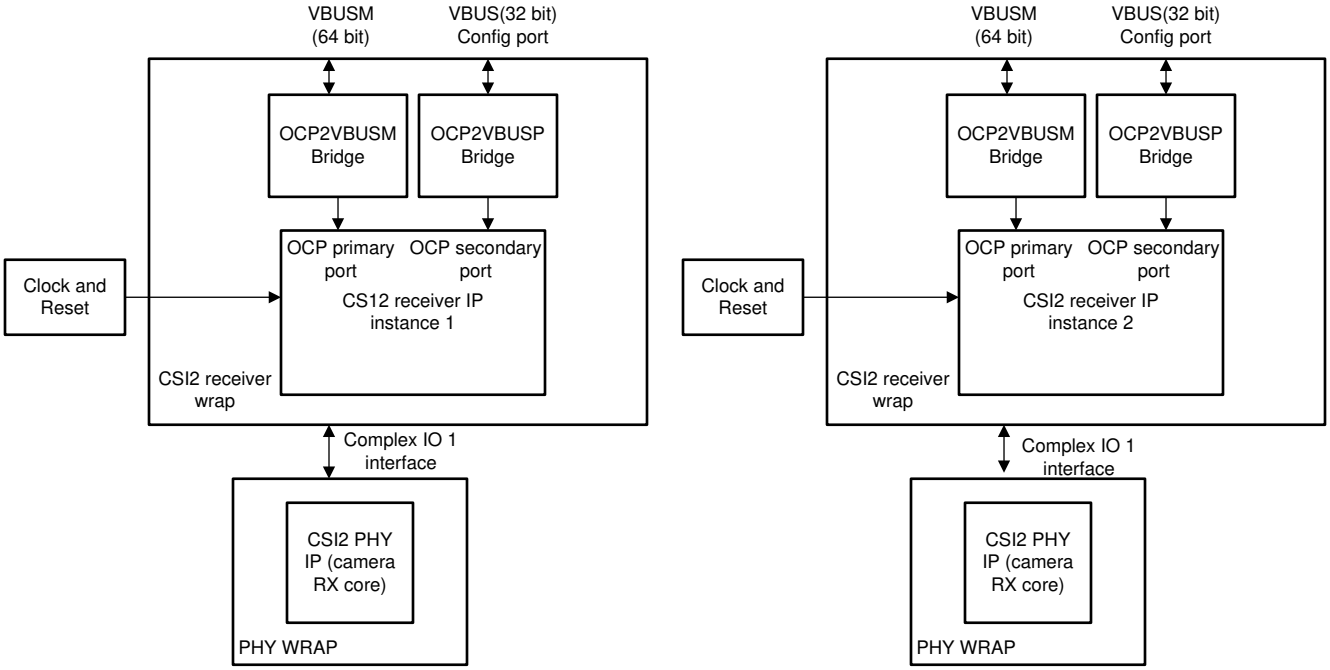

Figure 11-396. CSI2-A Receiver Block Diagram

11.6.1.1.3.3.2 CSI2 Functional Description

11.6.1.1.3.3.2.1 CSI2 Physical Layer Lane Configuration

The CSI2 serial interface is a unidirectional differential serial interface with data/clock for the physical layer.

The maximum CSI2 receiver data transfer capacity is 900 Mbps per data lane.

Data-clock signaling consists of two to five differential signal pairs: from one to four data lanes and one clock lane:

- The data signal carries the bit-serial data. The CSI2 transmitter in the image sensor sends the data in-quadrature with the dual-data rate (DDR) clock in HS mode; otherwise, the clock is extracted from the received data in LS mode. Data is transmitted byte-wise, LSB first. The CSI2 complex I/O receives the data and sends the byte stream to the CSI2 receiver.
- The clock signal carries the DDR clock signal.

Each physical lane can be a data or clock lane with a restriction to the fourth line, which can only be data (see Section 11.6.1.1.2.1, *CSI2 PHY Overview*). The clock/data lane must be configured before transmission to indicate the byte order, while merging the received bytes into a byte stream shows the reachable speed per data lane function of data lane numbers.

Lanes are configured through the CSI2_COMPLEXIO_CFG registers for CSI2-A and CSI2-B PHY, respectively. The [2:0] CLOCK_POSITION bit field and the [3] CLOCK_POL bit configure which lane transmits the clock and define its polarity. DATAl_POSITION and DATAl_POL configure the data lanes and their polarity, where l is the number of the data lane (l = 1 to 4). When the DATAl_POSITION field is set to 0, data lane l is not used.

Copyright © 2025 Texas Instruments Incorporated

CAUTION

Lane 4 (position 5) supports only data. The CLOCK_POSITION must not be set at position 5.

11.6.1.1.3.3.2.2 CSI2 ECC and Checksum Generation

The CSI2 receiver includes an ECC in the packet header and a checksum in the packet footer for long-packet transmission. These two fields can be used to detect and/or correct errors in the received packet.

11.6.1.1.3.3.2.2.1 CSI2 ECC

To detect and correct transmission errors of the header of short and long packets, an 8-bit ECC is included in the header of packets (short and long packet).

The ECC concerns all the fields for a short packet (data ID and short-packet data field) and the packet header for a long packet (data ID and word count). The ECC can only correct one error. Additional errors cannot be repaired, but they are flagged.

The CSI2 receiver ECC is compared against the CSI2 transmitter ECC embedded in the bitstream. If the ECC does not match, an interrupt is triggered to the host central processing unit (CPU).

For long and short packets, the correction is always done if there is only one error per packet header.

An ECC error with or without correction can be reported at two levels, depending on the type of packet. Table 11-1425 describes the field in which events are logged. Logging cannot be disabled, but users can set the corresponding bit in the and registers to prevent event generation at a higher level.

Table 11-1425. CSI2 ECC Event Logging

	Short Packet	Long Packet
With correction	Global CSI2_IRQSTATUS[12] ECC_CORRECTION_IRQ	Context CSI2_CTX_IRQENABLE_i[8] ECC_CORRECTION_IRQ
Without correction	Global CSI2_IRQSTATUS[11] ECC_NO_CORRECTION_IRQ	Global CSI2_IRQSTATUS[11] ECC_NO_CORRECTION_IRQ

The ECC check can be disabled (short and long packet) by setting the [2] ECC_EN bit to 0. Setting the bit to 1 enables the ECC check.

11.6.1.1.3.3.2.2.2 CSI2 Checksum

To detect errors in transmission of the payload of long packets, a 16-bit CRC checksum is computed on the payload of the long packets in the transmitter. This CRC is stored in the packet footer. A CRC is also computed in the CSI2 receiver. If the checksums do not match, an interrupt is triggered to the host CPU.

CRC errors are logged in the CS_IRQ field of the corresponding context register, . Logging cannot be disabled, but users can set the corresponding bit in the register to prevent event generation at a higher level.

The CRC can be disabled for a specific context by setting the [5] CS_EN bit to 0. Seeting the bit to 1 enables the CRC.

11.6.1.1.3.3.2.3 CSI2 Short Packet

There are two types of short packets in the CSI2 receiver:

- Synchronization short packet: Used by the protocol engine to synchronize frame and line (data ID from 0x0 to 0x7)
- Generic short packet: User-dependent; not treated by the protocol engine (data ID from 0x8 to 0xF)

When a generic short packet is received by the CSI2 receiver, the ECC check is performed if it is enabled. Then, the short packet is written in the [23:0] SHORT_PACKET bit field. The ECC field is deleted from the short packet. Figure 11-397 shows the SHORT_PACKET bit field format.

Copyright © 2025 Texas Instruments Incorporated



Figure 11-397. CSI2 SHORT_PACKET Bit Field Format

When a short packet is stored, an event is logged in the [13] SHORT_PACKET_IRQ bit. Logging cannot be disabled, but users can set the corresponding bit in the register to prevent event generation at a higher level.

The application reads the register before the next short packet with a code from 0x8 to 0xF. There is a single register for capturing the generic short packet, because no data type in it is associated with context.

11.6.1.1.3.3.2.4 CSI2 Virtual Channel and Context

The CSI2 protocol layer transports virtual channels. The virtual channels separate different data flows interleaved in the same data stream. Each virtual channel is identified by a unique channel identification number in the packet header. This channel identification number is encoded in the 2-bit code.

The CSI2 receiver monitors the channel identifier number and demultiplexes the interleaved data streams. The CSI2 receiver supports up to four concurrent virtual channels.

The CSI2 receiver supports eight contexts with their events to control the four possible virtual channels and the different data transmitted through them. A context is linked to a specific data type transported by a given virtual channel. The following bit fields permit configuration of a context:

- [12:11] VIRTUAL_ID: Configures the virtual ID linked to the current context
- [9:0] FORMAT: Configures the data format linked to the current context

Figure 11-398 shows the relationships between virtual channels and contexts.

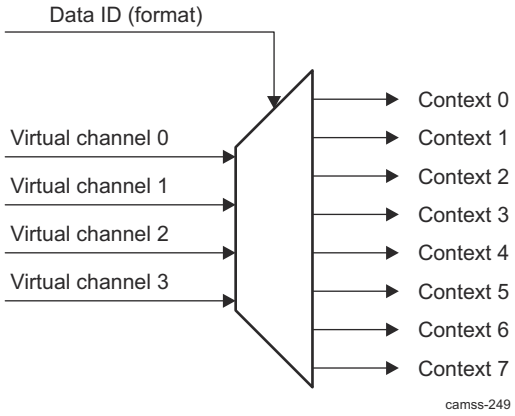

Figure 11-398. CSI2 Virtual Channel to Context

Each context consists of eight registers: six registers to control the corresponding context and two to log and enable events from the context. All registers in a context can be modified at any time; however, modifications apply only from the start of the following frame.

A context can be enabled independently by setting the [0] CTX_EN bit to 1; setting this bit to 0 disables the corresponding context.

When acquiring frames on a context, users can write the number of frames to capture in the [15:8] COUNT bit field. Acceptable values are 0 to 255; 0 stands for infinite capture (no count). After each frame is acquired, the count value is decremented by 1. When the count value reaches 0, the [6] FRAME_NUMBER_IRQ event is set and the CTX_EN bit is set to 0. To write a value in the COUNT bit field, the [4] COUNT_UNLOCK bit must be set to 1. If the value of the COUNT_UNLOCK bit is 0, a write in the COUNT bit field has no effect.

The CSI2_CTX_CTRL3_i[15:0] LINE_NUMBER bit field configures the generation of the [7] LINE_NUMBER_IRQ event. The [1] LINE_MODULO bit configures how the LINE_NUMBER event is generated:

Copyright © 2025 Texas Instruments Incorporated

- 0: The event is generated one time by frame.
- 1: The event is generated modulo LINE_NUMBER (the event can be generated more than once in a frame).

During a frame capture, the [31:16] FRAME_NUMBER bit field shows the number that identifies the frame received.

11.6.1.1.3.3.2.5 CSI2 DMA Engine

The CSI2 receiver integrates its own DMA engine with dedicated FIFO.

Global DMA configuration is common to the eight channels and is defined in the register. Configuration of the ping-pong address and the offset between lines is specific for a given context; therefore, each context has its own DMA configuration registers.

The DMA engine supports:

- 1D addressing mode (no address line offset, CSI2_CTX_DAT_OFST_i = 0)
- 2D addressing mode (address line offset different than 0, CSI2_CTX_DAT_OFST_i != 0)

The burst size is defined in the [6:5] BURST_SIZE bit field and the [16] BURST_SIZE_EXPAND bit. The DMA uses the burst size or smaller sizes down to single open-core protocol (OCP) writes depending on the alignment at the end of lines. The DMA engine can handle burst requests. When the burst requests can be used, as soon as one burst of data is present in the FIFO, the DMA engine initiates a burst write.

Note

Unless there are specific requirements, CSI2 (also applies to all other initiators) must be configured to use only a burst size of 128 bytes and nonposted writes.

When single requests must be used, as soon as one element (the size depends on the data type and the post-processing: DPCM, EXT, etc.) is present in the FIFO, the DMA engine initiates a single write.

Interleave mode is dedicated by the CSI2 receiver only when the line numbers are received (short packets). The line number is used to calculate the start address of the line.

The DMA starts to write in memory using the [31:5] ADDR bit field for the first frame to be transferred, and then uses the [31:5] ADDR bit field and the ping address alternately. Thus, the first frame uses the ping address, the second frame uses the pong address, the third frame uses the ping address, and so on.

The [3] PING_PONG status bit indicates whether the ping address () or the pong address () was used to store the pixel data of the last frame. After reset or after a 0-to-1 edge transition in the [0] IF_EN bit, the pixel data is written in the ping buffer and the [3] PING_PONG bit = PONG. When the number of FECs received equals the value programmed in the [23:16] FEC_NUMBER bit field, the pixel data are written in the pong buffer and [3] PING_PONG = PING. [3] PING_PONG toggles after the [23:16] FEC_NUMBER FEC sync code with the virtual channel ID defined is received in the [12:11] VIRTUAL_ID bit field.

The [23:16] FEC_NUMBER bit field must be set as follows:

- In progressive mode, set to 1.
- In interlaced mode, set to the number of interlaced frames to recreate a progressive image in the PING_PONG buffer.

11.6.1.1.3.3.2.5.1 CSI2 Progressive Frame to Progressive Storage

After each line, a new start line address is computed, depending on the value of the [31:5] OFST bit field:

- If OFST = 0, the new line starts immediately after the last pixel (data are written contiguously in memory).
- Otherwise, the value of OFST sets the offset between the first pixel of the previous line and the first pixel of the current line in memory.

Copyright © 2025 Texas Instruments Incorporated

For the ping frame:

```
@Line0 = CSI2_CTX_DAT_PING_ADDR_i@Line1 = @Line0 + CSI2_CTX_DAT_OFST_i@Line2 = @Line1 +
CSI2_CTX_DAT_OFST_i
```

For the pong frame:

```
@Line0 = CSI2_CTX_DAT_PONG_ADDR_i@Line1 = @Line0 + CSI2_CTX_DAT_OFST_i@Line2 = @Line1 +
CSI2_CTX_DAT_OFST_i
```

11.6.1.1.3.3.2.5.2 CSI2 Interlaced Frame to Progressive Storage

The mode is functional only when the line numbers are transmitted. It is automatically enabled without setting.

For the ping frame:

```
@LineX = CSI2_CTX_DAT_PING_ADDR_i + CSI2_CTX_DAT_OFST_i * Line_Number
```

For the pong frame:

```
@LineX = CSI2_CTX_DAT_PONG_ADDR_i + CSI2_CTX_DAT_OFST_i * Line_Number
```

Figure 11-399 shows how data are stored in memory regarding the DMA configuration.

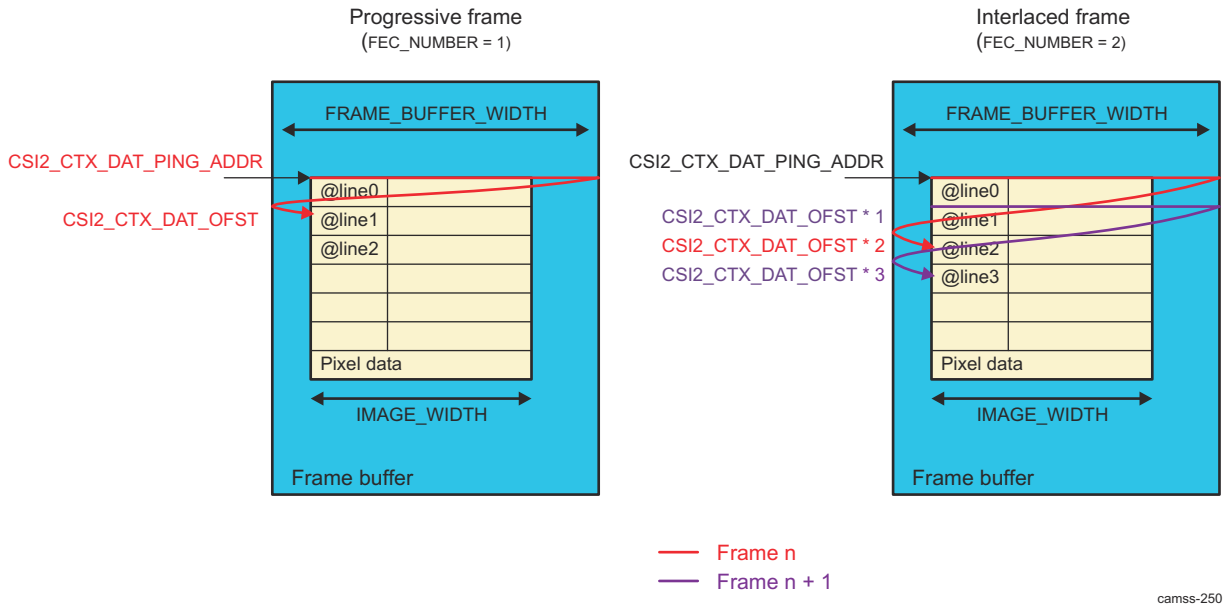

Figure 11-399. CSI2 Data Destination Setting in Progressive and Interlaced Mode

The burst size is defined in the CSI2_CTRL[6:5] BURST_SIZE bit field for bursts up to 16 × 64 bits or the CSI2_CTRL[16] BURST_SIZE_EXPAND bit for 16 × 128-bit bursts. It can be changed only while the CSI2_CTRL[0] IF_EN bit is reset to 0. The recommended value is the CSI2_CTRL[16] BURST_SIZE_EXPAND bit set to 1, which defines a burst of 16 × 64 bits (the maximum value); otherwise, by default it is set to 8 × 64 bits. When the BURST_SIZE_EXPAND bit is set, the BURST_SIZE setting has no effect. The DMA uses nonposted writes by default. The CSI2_CTRL[13] NON_POSTED_WRITE bit must be set to 1 to match DMA default configuration. It can be changed only while the CSI2_CTRL[0] IF_EN bit is reset to 0.

11.6.1.1.3.3.2.6 CSI2 MFLAG Mechanism and Arbitration

The MFLAG mechanism allows a dynamic increase of the priority of CSI2 real-time traffic, when required, based on the fullness of the CSI2 DMA read and write buffers. Programmable buffer thresholds indicate when the

Copyright © 2025 Texas Instruments Incorporated

local MFLAG signal is generated. The MFLAG signal is then provided to the L3 interconnect for granting or prioritizing OCP requests. The out band CSI2 MFLAG signal is asynchronous to any on-going OCP transaction. The threshold corresponds to the fullness of DMA buffer, and is defined by the following threshold parameters:

- High threshold – When the corresponding pipeline buffer reaches the programmed value, the associated local MFLAG signal goes high (asserted). The value is set in the [22:20] MFLAG_LEVH register.
- Low threshold – When the corresponding pipeline buffer reaches the programmed value, the associated local MFLAG signal goes low (deasserted). The value is set in the [19:17] MFLAG_LEVL register.

11.6.1.1.3.3.2.7 CSI2 Transcoding

Image transcoding is used mainly to reduce memory footprint and bandwidth when:

- The sensor does not support DPCM compression. In fact, A-Law and DPCM compressed pixels occupy only 6, 7, or 8 BPP of storage.
- Digital zoom is used
  - Data that is not going to be used by further processing does not need to the stored in system memory.
  - Pixels cannot be accessed from random locations in a DPCM-compressed frame. Transcoding avoids memory-to-memory processing of unused pixels.

Figure 11-400 shows the logical representation of the image transcoding operation.

- Data is extracted from the CSI2 stream by the protocol engine.
- It is DPCM decompressed if necessary. That is the case when the received stream is DPCM-compressed and transcoding has been enabled using the [27:24] TRANSCODE bit field.
- Internal data are aligned on MSB when they enter the cropping stage. For example:
  - 4 LSBs are 0s when RAW10 data are handled.
  - 2 LSBs are 0s when RAW12 data are handled.

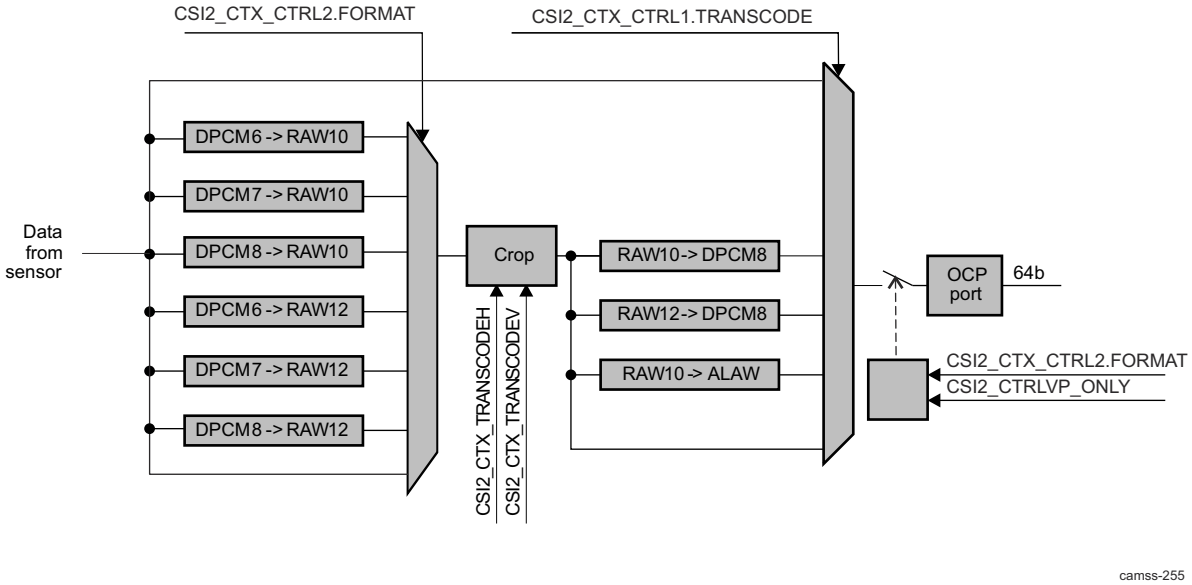

Figure 11-400. CSI2 Frame Processing

Table 11-1426 shows the input format provided to the cropping engine for a given pixel format provided by the sensor. Formats not listed in the table are not supported for transcoding. The FORMAT and Corresponding Setting Value column corresponds to the value set in the [9:0] FORMAT register.

Copyright © 2025 Texas Instruments Incorporated

Table 11-1426. CSI2 Supported Transcoding Input Formats

CSI2_CTX_CTRL2_i[9:0] FORMAT and Corresponding Setting Value		Cropping Engine Input Format	DPCM Decomposition Enabled	Video Port Enabled
0x028	RAW6	RAW6		
0x068	RAW6 + EXP8			
0x029	RAW7	RAW7		
0x069	RAW7 + EXP8			
0x02A	RAW8	RAW8		
0x02B	RAW10	RAW10		
0x0AB	RAW10 + EXP16			
0x229	RAW7 + DPCM10 + EXP16		Yes	
0x2A8	RAW6 + DPCM10 + EXP16		Yes	
0x2AA	RAW8 + DPCM10 + EXP16		Yes	
0x2Cn	USER_DEFINED_BYTE_DATA + DPCM10 + EXP16		Yes	
0x02C	RAW12	RAW12		
0x0AC	RAW12 + EXP16			
0x35A	RAW8 DPCM12 + EXP16		Yes	
0x1Cn	USER_DEFINED_BYTE_DATA + DPCM12 + EXP16		Yes	
0x3A8	RAW6 + DPCM12 + EXP16		Yes	
0x369	RAW7 + DPCM12 + EXP16		Yes	
0x02D	RAW14	RAW14		
0x0AD	RAW14 + EXP16			

Image cropping parameters are controlled by software. Figure 11-401 shows the cropping operation.

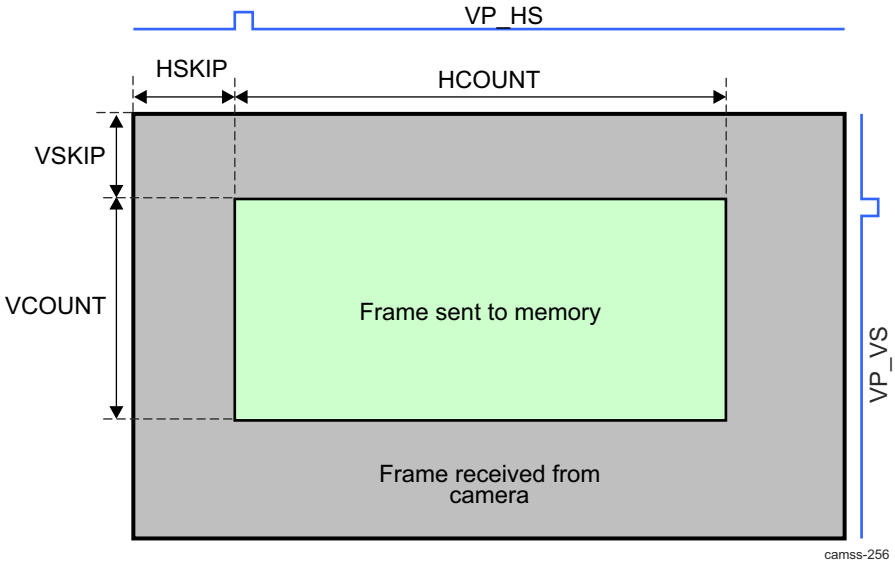

Figure 11-401. CSI2 Frame Cropping

Copyright © 2025 Texas Instruments Incorporated

CAUTION

Hardware does not check for validity of the settings. The following rules must be respected:

- [12:0] HSKIP + CSI2_CTX_TRANSCODEH_i[28:16] HCOUNT <= image width
- [12:0] VSKIP + CSI2_CTX_TRANSCODEV_i[28:16] VCOUNT <= image height

Furthermore, the [28:16] HCOUNT bit field must comply with the following alignment constraints; otherwise, undefined behavior occurs. Table 11-1427 shows the transcode alignment constraints

Table 11-1427. CSI2 Transcode Alignment Constraints

CSI2_CTX_CTRLi[27:24] TRANSCODE Value	Transcode	HCOUNT Must Be Multiple of
0x0	Disabled	1
0x1	DPCM10 RAW8	1
0x2	DPCM12 RAW8	1
0x3	ALAW10 RAW8	1
0x4	RAW8	1
0x5	RAW10 + EXP16	1
0x6	RAW10	4
0x7	RAW12 + EXP16	1
0x8	RAW12	2
0x9	RAW10 + EXP16	4

The CSI2_CTX_CTRL1_i[28] HSCALE configuration register enables horizontal downscaling of RAW data. It reduces the horizontal size and pixel clock by a factor of 2. The scaler uses a 2-tap horizontal filter operating on samples of the same color plane. The coefficients are: [1/2 ; 0 ; 1/2]

Figure 11-402 shows the scaler operation.

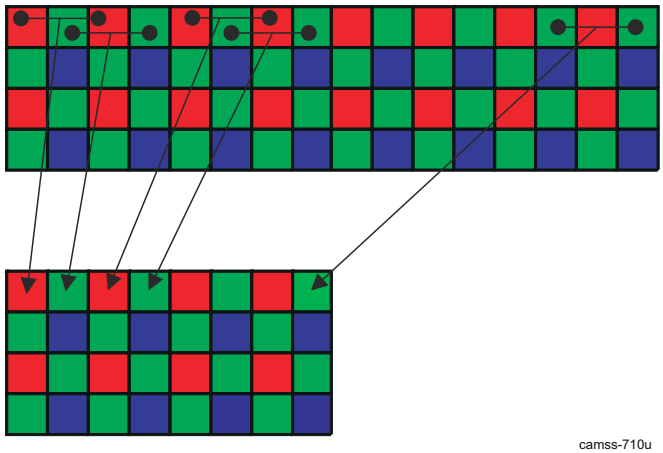

Figure 11-402. CSI2 Horizontal Scaler

When data goes to the interface port, HCOUNT/2 must comply with the constraints from Table 11-1427 (for example, for RAW10, HCOUNT must be a multiple of 8).

Table 11-1428 lists possible combinations of input and output formats supported by the transcoding engine. The Transcode column corresponds to the CSI2_CTX_CTRL1_i[27:24] TRANSCODE bit field of a context.

Copyright © 2025 Texas Instruments Incorporated

Table 11-1428. CSI2-Supported Transcoding Output Formats

Cropping Engine Output	Transcode		Supported	Cropping Engine Output	Transcode		Supported
RAW6	0	Disabled	Yes	RAW10	0	Disabled	Yes
	1	DPCM10 RAW8			1	DPCM10 RAW8	Yes
	2	DPCM12 RAW8			2	DPCM12 RAW8	
	3	ALAW10 RAW8			3	ALAW10 RAW8	Yes
	4	RAW8			4	RAW8	
	5	RAW10 + EXP16			5	RAW10 + EXP16	Yes
	6	RAW10			6	RAW10	Yes
	7	RAW12 + EXP16			7	RAW12 + EXP16	
	8	RAW12			8	RAW12	
	9	RAW14			9	RAW14	
RAW7	0	Disabled	Yes	RAW12	0	Disabled	Yes
	1	DPCM10 RAW8			1	DPCM10 RAW8	
	2	DPCM12 RAW8			2	DPCM12 RAW8	Yes
	3	ALAW10 RAW8			3	ALAW10 RAW8	
	4	RAW8			4	RAW8	
	5	RAW10 + EXP16			5	RAW10 + EXP16	
	6	RAW10			6	RAW10	
	7	RAW12 + EXP16			7	RAW12 + EXP16	Yes
	8	RAW12			8	RAW12	Yes
	9	RAW14			9	RAW14	
RAW8	0	Disabled	Yes	RAW14	0	Disabled	Yes
	1	DPCM10 RAW8			1	DPCM10 RAW8	
	2	DPCM12 RAW8			2	DPCM12 RAW8	
	3	ALAW10 RAW8			3	ALAW10 RAW8	
	4	RAW8	Yes		4	RAW8	
	5	RAW10 + EXP16			5	RAW10 + EXP16	
	6	RAW10			6	RAW10	
	7	RAW12 + EXP16			7	RAW12 + EXP16	
	8	RAW12			8	RAW12	
	9	RAW14			9	RAW14	Yes

RAW pixels are packed into 64-bit words sent to the OCP master port, as defined in:

- Section 1.1.3.1.1.4.3.3, *CSI2 RAW8*
- Section 1.1.3.1.1.4.3.4, *CSI2 RAW10*
- Section 1.1.3.1.1.4.3.5, *CSI2 RAW12*
- Section 1.1.3.1.1.4.3.6, *CSI2 RAW14*

For RAW10 and RAW12, software can choose among packed and nonpacked storage. A-Law and DPCM-compressed pixels are stored as RAW8 data: each RAW8 container holds a compressed data point.

Enabling of the OCP is controlled by the [9:0] FORMAT bit field and the [11] VP_ONLY_EN and CSI2_CTX_CTRL1_i[2] VP_FORCE bits.

To enable transcoding, software configures the context normally and also configures the framing using the and registers. Software defines the after transcoding with the CSI2_CTX_CTRL1_i[27:24] TRANSCODE bit field.

Copyright © 2025 Texas Instruments Incorporated

11.6.1.1.3.3.2.8 CSI2 EndOfFrame and EndOfLine (EOF and EOL) Pulses

The CSI2 receiver generates two signals to qualify the last pixel of a frame and the last pixel of a line to the TCTRL. It is active during or after the adequate interface bridge transaction and becomes inactive before the first transaction of the next line. Software can enable/disable generation of those signals for each context using the [7] EOF_EN and [6] EOL_EN bits.

11.6.1.1.3.3.2.9 CSI2 Data Decompression

The data compression technique used is DPCM and PCM.

To select the DPCM decompression predictor for the CSI2 Interface, set the [10] DPCM_PRED bit to 1 for simple predictor or to 0 for advanced predictor.

11.6.1.1.3.4 CSI2 Programming Model

11.6.1.1.3.4.1 CSI2 Programming Reset Management

The CSI2 receiver accepts a general software reset, propagated throughout the hierarchy. This reset can be done to initialize the CSI2 receiver and the complex I/O (A or B) and has the same effect as a hardware reset. Figure 11-403 shows how to reset CSI2 globally.

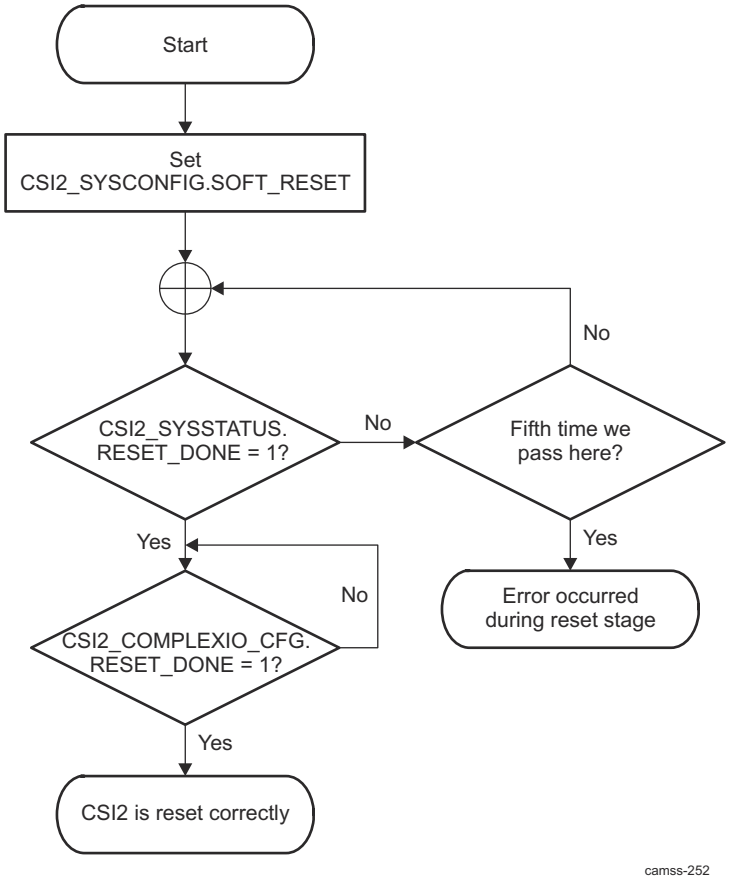

Figure 11-403. CSI2 Receiver Global Reset Flow Chart

Note

Before setting the software reset bit to 1 in the CSI2_SYSCONFIG register, the user must have access to a CSI2 receiver register.

Copyright © 2025 Texas Instruments Incorporated

Note

The CSI2_COMPLEXIO_CFG[29] RESET_DONE bit is set to 1 only after the initialization of the CSI2 receiver, CSI2 complex I/O, and external camera completes.

11.6.1.1.3.4.2 CSI2 Programming Enable Video/Picture Acquisition

Before using the receiver, a CSIPHY initialization in CSI2 mode must be made for CSI2-A CSIRX, which is associated with the CSI2 receiver. See Section 11.6.1.1.2.2.2, *CSI2 PHY and Link Initialization Sequence*. To start a video/picture acquisition, perform the steps listed in Table 11-1429.

Table 11-1429. CSI2 Global Initialization

Step	Register/Bit Field/Programming Model	Value
Reset the CSI2 receiver.	See Section 11.6.1.1.3.4.1, *Reset Management.*	
Configure the module power management. The module tries to enter smart-standby mode during the vertical blanking period. The CSI2_SYSCONFIG[0] AUTO_IDLE bit keeps its reset value; by default, an automatic port clock gating strategy is applied based on port interface activity.	CSI2_SYSCONFIG[13:12] MSTANDBY_MODE	0x2
Configure the interrupt generation as required. To enable context and/or complex I/O event reporting, enable the corresponding bit field in the CSI2_IRQENABLE register. If the enable bit is at 0, logging is still effective if an event occurs, but is not reported to a higher level.	CSI2_IRQENABLE and CSI2_IRQENABLE	
Configure the complex I/O interrupt generation as required. If the enable bit is at 0, logging is still effective if an event occurs, but is not reported to a higher level.	CSI2_COMPLEXIO_IRQSTATUS and CSI2_COMPLEXIO_IRQENABLE)	
Start complex I/O: Set the CSI2_COMPLEXIO_CFG[28:27] PWR_CMD bit field to 0x1 to pass the complex I/O to the ON state, and then check that the state status reaches the ON state (CSI2_COMPLEXIO_CFG[26:25] PWR_STATUS = 0x1) (for complex I/O A).	CSI2_COMPLEXIO_CFG[28:27] PWR_CMD	0x1
Configure the complex I/O: • The complex I/O is fully functional with CSI2_COMPLEX_CFG set at its reset value. • CSI2_COMPLEX_CFG must be changed according to the data rate being used.	CSI2_COMPLEXIO_CFG	
Set RXMODE and STOPSTATE FSM to RXMODE state. Users can also configure the delay for the FSM to return from RXMODE to NORXMODE when all lines reach STOPSTATE.	CSI2_TIMING[15] FORCE_RX_MODE_IO1	0x1
Activate ECC correction and error detection on short packets and packet headers. The ECC check corrects the packet if there is one error and generates an error if there is more than one error (unrecoverable error).	CSI2_CTRL[2] ECC_EN	0x1
Start the CSI2 receiver.	CSI2_CTRL[0] IF_EN	0x1
Configure the different contexts to be used.		
Link the context to a virtual channel and a data type.	See Section 11.6.1.1.3.4.6, *Linking a Context to a Virtual Channel and a Data Type.*	
Set the FEC_NUMBER bit field to 0x1 for a progressive video and to 0x2 for an interlaced video. For more information, see Section 11.6.1.1.3.3.2.5, *DMA Engine.*	CSI2_CTX_CTRL1_i[26:23] FEC_NUMBER	0x1 or 0x2
Capture an infinite number of frames (until the interface or the context is disabled).	CSI2_CTX_CTRL1_i[15:8] COUNT and CSI2_CTX_CTRL1_i[4] COUNT_UNLOCK	0x0

Copyright © 2025 Texas Instruments Incorporated

Table 11-1429. CSI2 Global Initialization (continued)

Step	Register/Bit Field/Programming Model	Value
Enable the CRC checksum on long packet payload. This allows detection of errors, but cannot correct errors like the ECC for header and short packet. On error detection, an event is triggered (the CSI2_CTX_IRQSTATUS_i[5] CS_IRQ bit).	CSI2_CTX_CTRL1_i[5] CS_EN	
Configure the DMA engine for the current channel: Configure the ping and pong addresses.	CSI2_CTX_DAT_PING_ADDR_i[31:5] ADDR and CSI2_CTX_DAT_PING_ADDR_i[31:5] ADDR	
Set the CSI2_CTx_DAT_OFST_i[15:5] OFST bit field to 0x0 so consecutive lines are stored consecutively in memory (image width and frame-buffer width are equal).	CSI2_CTX_DAT_OFST_i[15:5] OFST	
Keep the ALPHA setting at its reset value (0x0) for RGB padding.	CSI2_CTX_CTRL3_i[29:16] ALPHA	
Enable the contexts.	CSI2_CTX_CTRL1_i[0] CTX_EN	0x1

11.6.1.1.3.4.3 CSI2 Programming Disable Video/Picture Acquisition

There are two ways to end picture acquisition:

- Disable the corresponding context by setting the [0] CTX_EN bit to 0. This stops the acquisition for the current context. Other enabled contexts are still capturing frames and writing them in memory.
- Disable the CSI2 receiver interface by setting the [0] IF_EN bit to 0. This can have an immediate effect if the [3] FRAME bit is set to 0, or it can be effective after all the enabled contexts receive the FEC if the [3] FRAME bit is set to 1.

11.6.1.1.3.4.4 CSI2 Programming Capture a Finite Number of Frames

The CSI2 receiver can be configured to capture a finite number of frames. To configure the CSI2 receiver in this mode, perform the steps listed in Table 11-1430.

Table 11-1430. CSI2 Capture a Finite Number of Frames

Step	Bit Field	Value
Enable a write to the COUNT bit field.	CSI2_CTX_CTRL1_i[4] COUNT_UNLOCK	0x1
Set the bit field to the number of frames the CSI2 receiver must capture.	CSI2_CTX_CTRL1_i[15:8] COUNT	Valid values are 0 to 255; 0 is infinite capture and 1 to 255 defines the number of frames to capture.
Disable a write to the COUNT bit field.	CSI2_CTX_CTRL1_i[4] COUNT_UNLOCK	0x0

During frame capture, the COUNT bit field is decremented by 1 at each frame capture. Software reads the COUNT bit field to know how many frames must still be captured.

The COUNT bit can be updated during capture if the COUNT_UNLOCK bit is set to 1.

11.6.1.1.3.4.5 CSI2 Programming a Periodic Event During Frame Acquisition

The CSI2 receiver can generate a periodic event. This line number is defined in the [15:0] LINE_NUMBER bit field. The event can be generated once or multiple times per frame, depending on the value of the [1] LINE_MODULO bit:

- If the LINE_MODULO bit = 0, the event is generated when the line number corresponding to the LINE_NUMBER bit field is received.
- If the LINE_MODULO bit = 1, the event is generated when the line number received corresponds to a multiple of the LINE_NUMBER value (LINE_NUMBER is used as a modulo).

Copyright © 2025 Texas Instruments Incorporated

11.6.1.1.3.4.6 CSI2 Programming a Context to a Virtual Channel and a Data Type

The CSI2 receiver supports eight contexts and the CSI2 protocol defines four virtual channels. Therefore, a CSI2 receiver context can be associated with a virtual channel and a data type. Virtual channels are defined by a 2-bit field. Valid data types for the CSI2 receiver with their associated values are described in the [9:0] FORMAT bit field.

For each context, a register defines with which channel and data type the context is associated:

- The VIRTUAL_ID bit field defines the associated virtual ID transported by the CSI2 protocol from the camera sensor.
- The FORMAT bit field defines the associated data type. The data type is a combination of the data type transported by the CSI2 protocol and the type of storage in memory. A given data type (RGB888) can be stored in memory in different ways (RGB888 or RGB888 + EXP32). Therefore, the FORMAT bit field also defines how DMA stores data in memory.
- **CSI2_CTXn_DAT_PING_ADDR** and **CSI2_CTX0_DAT_PONG_ADDR** need to be set in order to store the received data (ping or pong manner) from CSI2RX. Same set of registers would be used during HIL mode to write data to device's internal memory.

For example, for the current context to capture a frame from virtual channel 2 and data type RAW12 with data expansion (RAW12 + EXP16), write the value 0x10AC (0x2 11 + 0xAC) in the 16 LSBs of the register.

11.6.1.1.3.4.7 CSI2 Programming Progressive and Interleaved Frame Configuration

The CSI2 receiver can treat progressive and interlaced frames. There is no progressive or interleaved mode, but the [23:16] FEC_NUMBER bit field controls the number of FECs before swapping to the other (ping or pong) buffer. Therefore, two modes are possible:

- FEC_NUMBER = 1: This is equivalent to progressive mode. After a FEC on the context, the current buffer is switched (ping to pong or pong to ping). The image in the memory buffer consists of one transmitted frame.
- FEC_NUMBER = 2: The current buffer is switched (ping to pong or pong to ping) after the FEC_NUMBER FEC is received for the context. The image in the memory buffer consists of the FEC_NUMBER transmitted frame.

For more information about how data is stored in memory through the DMA, see Section 11.6.1.1.3.3.2.5, *DMA Engine*.

Note

If FEC_NUMBER 1, the camera sensor must send the line number information with the current line. Otherwise, the CSI2 receiver cannot calculate each line address.

11.6.1.1.3.4.8 CSI2 Programming Debug Mode

Table 11-1431 lists the procedure to enable debug mode.

Table 11-1431. CSI2 Enable Debug Mode

Step	Bit	Value
Enable debug mode.	CSI2_CTRL[7] DBG_EN	0x1

- During debug mode the input does not come from the CSI2 receiver interface but from the CSI2_DBG_H and CSI2_DBG_P registers. The full CSI2 receiver function can be debugged in debug mode. Full 32-bit values must always be written to the CSI2_DBG_H register. The CSI2_CTRL[0] IF_EN bit has no affect during debug mode. To reset the FIFO in case of overflow, the CSI2_CTRL[7] DBG_EN bit must be reset to 0, and the interface must be enabled by setting the CSI2_CTRL[0] IF_EN bit to 0x1.
- The CSI2_DBG_H register is used to provide short packet and long packet headers.
- The CSI2_DBG_P register is used to provide long packet payload.

The following examples apply to the CSI2_DBG_H register:

Copyright © 2025 Texas Instruments Incorporated

- The sync codes for virtual channel 0 are written as CSI2_DBG_H = 0xFF00 0000 or 0xFF00 0001, or 0xFF00 0002 or 0xFF00 0003. To send the RAW12 pixels 0x673, 0x452, 0x01d, 0xefc, 0xab0, 0x891, 0x326, 0x547, write CSI2_DBG_H = 0x0123 4567, followed by CSI2_DBG_H = 0x89abcdef, and CSI2_DBG_H = 0x7654 3210.

11.6.1.1.3.5 CSI2 Register Manual

11.6.1.1.3.5.1 CSI2 Instance Summary

Table 11-1432 summarizes the CSI2 instance.

Table 11-1432. CSI2 Instance Summary

Module Name	Base Address	Size
RCSS_CSI2A	0x05080000	392 bytes
RCSS_CSI2B	0x050A0000	392 bytes

Copyright © 2025 Texas Instruments Incorporated

11.6.1.1.3.5.2 RCSS_CSI2 Registers

Table 11-1433 lists the memory-mapped registers for the RCSS_CSI2 registers. All register offset addresses not listed in Table 11-1433 should be considered as reserved locations and the register contents should not be modified.

Table 11-1433. RCSS_CSI2 Registers

Offset	Acronym	Register Name	Section
0h	CSI2_REVISION	CSI2_REVISION	Go
10h	CSI2_SYSCONFIG	CSI2_SYSCONFIG	Go
14h	CSI2_SYSSTATUS	CSI2_SYSSTATUS	Go
18h	CSI2_IRQSTATUS	CSI2_IRQSTATUS	Go
1Ch	CSI2_IRQENABLE	CSI2_IRQENABLE	Go
40h	CSI2_CTRL	CSI2_CTRL	Go
44h	CSI2_DBG_H	CSI2_DBG_H	Go
48h	CSI2_GNQ	CSI2_GNQ	Go
4Ch	CSI2_COMPLEXIO_CFG2	CSI2_COMPLEXIO_CFG2	Go
50h	CSI2_COMPLEXIO_CFG1	CSI2_COMPLEXIO_CFG1	Go
54h	CSI2_COMPLEXIO1_IRQSTATUS	CSI2_COMPLEXIO1_IRQSTATUS	Go
58h	CSI2_COMPLEXIO2_IRQSTATUS	CSI2_COMPLEXIO2_IRQSTATUS	Go
5Ch	CSI2_SHORT_PACKET	CSI2_SHORT_PACKET	Go
60h	CSI2_COMPLEXIO1_IRQENABLE	CSI2_COMPLEXIO1_IRQENABLE	Go
64h	CSI2_COMPLEXIO2_IRQENABLE	CSI2_COMPLEXIO2_IRQENABLE	Go
68h	CSI2_DBG_P	CSI2_DBG_P	Go
6Ch	CSI2_TIMING	CSI2_TIMING	Go
70h	CSI2_CTX0_CTRL1	CSI2_CTX0_CTRL1	Go
74h	CSI2_CTX0_CTRL2	CSI2_CTX0_CTRL2	Go
78h	CSI2_CTX0_DAT_OFST	CSI2_CTX0_DAT_OFST	Go
7Ch	CSI2_CTX0_DAT_PING_ADDR	CSI2_CTX0_DAT_PING_ADDR	Go
80h	CSI2_CTX0_DAT_PONG_ADDR	CSI2_CTX0_DAT_PONG_ADDR	Go
84h	CSI2_CTX0_IRQENABLE	CSI2_CTX0_IRQENABLE	Go
88h	CSI2_CTX0_IRQSTATUS	CSI2_CTX0_IRQSTATUS	Go
8Ch	CSI2_CTX0_CTRL3	CSI2_CTX0_CTRL3	Go
90h	CSI2_CTX1_CTRL1	CSI2_CTX1_CTRL1	Go
94h	CSI2_CTX1_CTRL2	CSI2_CTX1_CTRL2	Go
98h	CSI2_CTX1_DAT_OFST	CSI2_CTX1_DAT_OFST	Go
9Ch	CSI2_CTX1_DAT_PING_ADDR	CSI2_CTX1_DAT_PING_ADDR	Go
A0h	CSI2_CTX1_DAT_PONG_ADDR	CSI2_CTX1_DAT_PONG_ADDR	Go
A4h	CSI2_CTX1_IRQENABLE	CSI2_CTX1_IRQENABLE	Go
A8h	CSI2_CTX1_IRQSTATUS	CSI2_CTX1_IRQSTATUS	Go
ACh	CSI2_CTX1_CTRL3	CSI2_CTX1_CTRL3	Go
B0h	CSI2_CTX2_CTRL1	CSI2_CTX2_CTRL1	Go
B4h	CSI2_CTX2_CTRL2	CSI2_CTX2_CTRL2	Go
B8h	CSI2_CTX2_DAT_OFST	CSI2_CTX2_DAT_OFST	Go
BCh	CSI2_CTX2_DAT_PING_ADDR	CSI2_CTX2_DAT_PING_ADDR	Go
C0h	CSI2_CTX2_DAT_PONG_ADDR	CSI2_CTX2_DAT_PONG_ADDR	Go
C4h	CSI2_CTX2_IRQENABLE	CSI2_CTX2_IRQENABLE	Go
C8h	CSI2_CTX2_IRQSTATUS	CSI2_CTX2_IRQSTATUS	Go
CCh	CSI2_CTX2_CTRL3	CSI2_CTX2_CTRL3	Go

Copyright © 2025 Texas Instruments Incorporated

Table 11-1433. RCSS_CSI2 Registers (continued)

Offset	Acronym	Register Name	Section
D0h	CSI2_CTX3_CTRL1	CSI2_CTX3_CTRL1	Go
D4h	CSI2_CTX3_CTRL2	CSI2_CTX3_CTRL2	Go
D8h	CSI2_CTX3_DAT_OFST	CSI2_CTX3_DAT_OFST	Go
DCh	CSI2_CTX3_DAT_PING_ADDR	CSI2_CTX3_DAT_PING_ADDR	Go
E0h	CSI2_CTX3_DAT_PONG_ADDR	CSI2_CTX3_DAT_PONG_ADDR	Go
E4h	CSI2_CTX3_IRQENABLE	CSI2_CTX3_IRQENABLE	Go
E8h	CSI2_CTX3_IRQSTATUS	CSI2_CTX3_IRQSTATUS	Go
ECh	CSI2_CTX3_CTRL3	CSI2_CTX3_CTRL3	Go
F0h	CSI2_CTX4_CTRL1	CSI2_CTX4_CTRL1	Go
F4h	CSI2_CTX4_CTRL2	CSI2_CTX4_CTRL2	Go
F8h	CSI2_CTX4_DAT_OFST	CSI2_CTX4_DAT_OFST	Go
FCh	CSI2_CTX4_DAT_PING_ADDR	CSI2_CTX4_DAT_PING_ADDR	Go
100h	CSI2_CTX4_DAT_PONG_ADDR	CSI2_CTX4_DAT_PONG_ADDR	Go
104h	CSI2_CTX4_IRQENABLE	CSI2_CTX4_IRQENABLE	Go
108h	CSI2_CTX4_IRQSTATUS	CSI2_CTX4_IRQSTATUS	Go
10Ch	CSI2_CTX4_CTRL3	CSI2_CTX4_CTRL3	Go
110h	CSI2_CTX5_CTRL1	CSI2_CTX5_CTRL1	Go
114h	CSI2_CTX5_CTRL2	CSI2_CTX5_CTRL2	Go
118h	CSI2_CTX5_DAT_OFST	CSI2_CTX5_DAT_OFST	Go
11Ch	CSI2_CTX5_DAT_PING_ADDR	CSI2_CTX5_DAT_PING_ADDR	Go
120h	CSI2_CTX5_DAT_PONG_ADDR	CSI2_CTX5_DAT_PONG_ADDR	Go
124h	CSI2_CTX5_IRQENABLE	CSI2_CTX5_IRQENABLE	Go
128h	CSI2_CTX5_IRQSTATUS	CSI2_CTX5_IRQSTATUS	Go
12Ch	CSI2_CTX5_CTRL3	CSI2_CTX5_CTRL3	Go
130h	CSI2_CTX6_CTRL1	CSI2_CTX6_CTRL1	Go
134h	CSI2_CTX6_CTRL2	CSI2_CTX6_CTRL2	Go
138h	CSI2_CTX6_DAT_OFST	CSI2_CTX6_DAT_OFST	Go
13Ch	CSI2_CTX6_DAT_PING_ADDR	CSI2_CTX6_DAT_PING_ADDR	Go
140h	CSI2_CTX6_DAT_PONG_ADDR	CSI2_CTX6_DAT_PONG_ADDR	Go
144h	CSI2_CTX6_IRQENABLE	CSI2_CTX6_IRQENABLE	Go
148h	CSI2_CTX6_IRQSTATUS	CSI2_CTX6_IRQSTATUS	Go
14Ch	CSI2_CTX6_CTRL3	CSI2_CTX6_CTRL3	Go
150h	CSI2_CTX7_CTRL1	CSI2_CTX7_CTRL1	Go
154h	CSI2_CTX7_CTRL2	CSI2_CTX7_CTRL2	Go
158h	CSI2_CTX7_DAT_OFST	CSI2_CTX7_DAT_OFST	Go
15Ch	CSI2_CTX7_DAT_PING_ADDR	CSI2_CTX7_DAT_PING_ADDR	Go
160h	CSI2_CTX7_DAT_PONG_ADDR	CSI2_CTX7_DAT_PONG_ADDR	Go
164h	CSI2_CTX7_IRQENABLE	CSI2_CTX7_IRQENABLE	Go
168h	CSI2_CTX7_IRQSTATUS	CSI2_CTX7_IRQSTATUS	Go
16Ch	CSI2_CTX7_CTRL3	CSI2_CTX7_CTRL3	Go
170h	CSI2_PHY_CFG_REG0	CSI2_PHY_CFG_REG0	Go
174h	CSI2_PHY_CFG_REG1	CSI2_PHY_CFG_REG1	Go
178h	CSI2_PHY_CFG_REG2	CSI2_PHY_CFG_REG2	Go
17Ch	CSI2_PHY_CFG_REG3	CSI2_PHY_CFG_REG3	Go
180h	CSI2_PHY_CFG_REG4	CSI2_PHY_CFG_REG4	Go

Copyright © 2025 Texas Instruments Incorporated

Table 11-1433. RCSS_CSI2 Registers (continued)

Offset	Acronym	Register Name	Section
184h	CSI2_PHY_CFG_REG5	CSI2_PHY_CFG_REG5	Go
188h	CSI2_PHY_CFG_REG6	CSI2_PHY_CFG_REG6	Go
1C0h	CSI2_CTX0_TRANSCODEH	CSI2_CTX0_TRANSCODEH	Go
1C4h	CSI2_CTX0_TRANSCODEV	CSI2_CTX0_TRANSCODEV	Go
1C8h	CSI2_CTX1_TRANSCODEH	CSI2_CTX1_TRANSCODEH	Go
1CCh	CSI2_CTX1_TRANSCODEV	CSI2_CTX1_TRANSCODEV	Go
1D0h	CSI2_CTX2_TRANSCODEH	CSI2_CTX2_TRANSCODEH	Go
1D4h	CSI2_CTX2_TRANSCODEV	CSI2_CTX2_TRANSCODEV	Go
1D8h	CSI2_CTX3_TRANSCODEH	CSI2_CTX3_TRANSCODEH	Go
1DCh	CSI2_CTX3_TRANSCODEV	CSI2_CTX3_TRANSCODEV	Go
1E0h	CSI2_CTX4_TRANSCODEH	CSI2_CTX4_TRANSCODEH	Go
1E4h	CSI2_CTX4_TRANSCODEV	CSI2_CTX4_TRANSCODEV	Go
1E8h	CSI2_CTX5_TRANSCODEH	CSI2_CTX5_TRANSCODEH	Go
1ECh	CSI2_CTX5_TRANSCODEV	CSI2_CTX5_TRANSCODEV	Go
1F0h	CSI2_CTX6_TRANSCODEH	CSI2_CTX6_TRANSCODEH	Go
1F4h	CSI2_CTX6_TRANSCODEV	CSI2_CTX6_TRANSCODEV	Go
1F8h	CSI2_CTX7_TRANSCODEH	CSI2_CTX7_TRANSCODEH	Go
1FCh	CSI2_CTX7_TRANSCODEV	CSI2_CTX7_TRANSCODEV	Go

Complex bit access types are encoded to fit into small table cells. Table 11-1434 shows the codes that are used for access types in this section.

Table 11-1434. RCSS_CSI2 Access Type Codes

Access Type	Code	Description
Read Type		
R	R	Read
Write Type		
W	W	Write
Reset or Default Value		
-n		Value after reset or the default value

Copyright © 2025 Texas Instruments Incorporated

11.6.1.1.3.5.2.1 CSI2_REVISION Register (Offset = 0h) [Reset = 00000030h]

CSI2_REVISION is shown in Table 11-1435.

Return to the Summary Table.

MODULE REVISION This register contains the IP revision code in binary coded digital. For example we have: 0x01 = revision 0.1 and 0x21 = revision 2.1

Table 11-1435. CSI2_REVISION Register Field Descriptions

Bit	Field	Type	Reset	Description
31-8	RES1	R	0h	RESERVE FIELD
7-0	REV	R	30h	IP revision [7:4] Major revision [3:0] Minor revision

Copyright © 2025 Texas Instruments Incorporated

11.6.1.1.3.5.2.2 CSI2_SYSCONFIG Register (Offset = 10h) [Reset = 00000001h]

CSI2_SYSCONFIG is shown in Table 11-1436.

Return to the Summary Table.

SYSTEM CONFIGURATION REGISTER This register is the OCP-socket system configuration register.

Table 11-1436. CSI2_SYSCONFIG Register Field Descriptions

Bit	Field	Type	Reset	Description
31-14	RES2	R	0h	RESERVE FIELD
13-12	MSTANDBY_MODE	R/W	0h	RESERVE FIELD
11-2	RES3	R	0h	RESERVE FIELD
1	SOFT_RESET	R/W	0h	Software reset. Set the bit to 1 to trigger a module reset. The bit is automatically reset by the hw. During reads return 0. 0: Normal mode. 1: The module is reset
0	AUTO_IDLE	R/W	1h	Internal OCP gating strategy 0: OCP clock is free-running. 1: Automatic OCP clock gating strategy is applied based on the OCP interface activity.

Copyright © 2025 Texas Instruments Incorporated

11.6.1.1.3.5.2.3 CSI2_SYSSTATUS Register (Offset = 14h) [Reset = 00000001h]

CSI2_SYSSTATUS is shown in Table 11-1437.

Return to the Summary Table.

SYSTEM STATUS REGISTER This register provides status information about the module excluding the interrupt status register.

Table 11-1437. CSI2_SYSSTATUS Register Field Descriptions

Bit	Field	Type	Reset	Description
31-1	RES4	R	0h	RESERVE FIELD
0	RESET_DONE	R	1h	Internal reset monitoring Read 0x1: Reset completed. Read 0x0: Internal module reset is on going.

Copyright © 2025 Texas Instruments Incorporated

11.6.1.1.3.5.2.4 CSI2_IRQSTATUS Register (Offset = 18h) [Reset = 00000000h]

CSI2_IRQSTATUS is shown in Table 11-1438.

Return to the Summary Table.

INTERRUPT STATUS REGISTER - All contexts This register associates one bit for each context in order to determine which context has generated the interrupt. The context shall be enabled for events to be generated on that context. If the

Table 11-1438. CSI2_IRQSTATUS Register Field Descriptions

Bit	Field	Type	Reset	Description
31-15	RES5	R	0h	RESERVE FIELD
14	OCP_ERR_IRQ	R/W	0h	OCP Error Interrupt 0: READS: Event is false. WRITES: Status bit unchanged. 1: READS: Event is true (pending). WRITES: Status bit is reset. (RW W1toClr)
13	SHORT_PACKET_IRQ	R/W	0h	Short packet reception status (other than synch events: Line Start, Line End, Frame Start, and Frame End: data type between 0x8 and x0F only shall be considered). 0: READS: Event is false. WRITES: Status bit unchanged. 1: READS: Event is true (pending). WRITES: Status bit is reset. (RW W1toClr)
12	ECC_CORRECTION_IRQ	R/W	0h	ECC has been used to do the correction of the only 1-bit error status (short packet only). 0: READS: Event is false. WRITES: Status bit unchanged. 1: READS: Event is true (pending). WRITES: Status bit is reset. - (RW W1toClr)
11	ECC_NO_CORRECTION_IRQ	R/W	0h	ECC error status (short and long packets). No correction of the header because of more than 1-bit error. 0: READS: Event is false. WRITES: Status bit unchanged. 1: READS: Event is true (pending). WRITES: Status bit is reset. - (RW W1toClr)
10	COMPLEXIO2_ERR_IRQ	R	0h	RESERVE FIELD
9	COMPLEXIO1_ERR_IRQ	R	0h	Error signaling from Complex IO #1: status of the PHY errors received from the complex IO #1 (events are defined in CSI2_COMPLEXIO1_IRQSTATUS for the 1st complex IO). Read 0: READS: Event is false. Read 1: READS: Event is true (pending).
8	FIFO_OVF_IRQ	R/W	0h	FIFO overflow error status. 0: READS: Event is false. WRITES: Status bit unchanged. 1: READS: Event is true (pending). WRITES: Status bit is reset. - (RW W1toClr)
7	CONTEXT7	R	0h	Context 7 Read 0: READS: Event is false. Read 1: READS: Event is true (pending).
6	CONTEXT6	R	0h	Context 6 Read 0: READS: Event is false. Read 1: READS: Event is true (pending).
5	CONTEXT5	R	0h	Context 5 Read 0: READS: Event is false. Read 1: READS: Event is true (pending).

Copyright © 2025 Texas Instruments Incorporated

Table 11-1438. CSI2_IRQSTATUS Register Field Descriptions (continued)

Bit	Field	Type	Reset	Description
4	CONTEXT4	R	0h	Context 4 Read 0: READS: Event is false. Read 1: READS: Event is true (pending).
3	CONTEXT3	R	0h	Context 3 Read 0: READS: Event is false. Read 1: READS: Event is true (pending).
2	CONTEXT2	R	0h	Context 2 Read 0: READS: Event is false. Read 1: READS: Event is true (pending).
1	CONTEXT1	R	0h	Context 1 Read 0: READS: Event is false. Read 1: READS: Event is true (pending).
0	CONTEXT0	R	0h	Context 0 Read 0: READS: Event is false. Read 1: READS: Event is true (pending).

Copyright © 2025 Texas Instruments Incorporated

11.6.1.1.3.5.2.5 CSI2_IRQENABLE Register (Offset = 1Ch) [Reset = 00000000h]

CSI2_IRQENABLE is shown in Table 11-1439.

Return to the Summary Table.

INTERRUPT ENABLE REGISTER - All contexts This register associates one bit for each context in order to enable/disable each context individually.

Table 11-1439. CSI2_IRQENABLE Register Field Descriptions

Bit	Field	Type	Reset	Description
31-15	RES6	R	0h	RESERVE FIELD
14	OCP_ERR_IRQ	R/W	0h	OCP Error Interrupt 0: Event is masked 1: Event generates an interrupt when it occurs
13	SHORT_PACKET_IRQ	R/W	0h	Short packet reception (other than synch events: Line Start, Line End, Frame Start, and Frame End: data type between 0x8 and x0F only shall be considered). 0: Event is masked 1: Event generates an interrupt when it occurs
12	ECC_CORRECTION_IRQ	R/W	0h	ECC has been used to correct the only 1-bit error (short packet only). 0: Event is masked 1: Event generates an interrupt when it occurs
11	ECC_NO_CORRECTION_IRQ	R/W	0h	ECC error (short and long packets). No correction of the header because of more than 1-bit error. 0: Event is masked 1: Event generates an interrupt when it occurs
10	COMPLEXIO2_ERR_IRQ	R/W	0h	RESERVED
9	COMPLEXIO1_ERR_IRQ	R/W	0h	Error signaling from Complex IO # 1: the interrupt is triggered when any error is received from the complex IO #1 (events are defined in CSI2_COMPLEXIO1_IRQSTATUS for the 1st complex IO). 0: Event is masked 1: Event generates an interrupt when it occurs
8	FIFO_OVF_IRQ	R/W	0h	FIFO overflow enable 0: Event is masked 1: Event generates an interrupt when it occurs
7	CONTEXT7	R/W	0h	Context 7 0: Event is masked 1: Event generates an interrupt when it occurs
6	CONTEXT6	R/W	0h	Context 6 0: Event is masked 1: Event generates an interrupt when it occurs
5	CONTEXT5	R/W	0h	Context 5 0: Event is masked 1: Event generates an interrupt when it occurs
4	CONTEXT4	R/W	0h	Context 4 0: Event is masked 1: Event generates an interrupt when it occurs
3	CONTEXT3	R/W	0h	Context 3 0: Event is masked 1: Event generates an interrupt when it occurs
2	CONTEXT2	R/W	0h	Context 2 0: Event is masked 1: Event generates an interrupt when it occurs
1	CONTEXT1	R/W	0h	Context 1 0: Event is masked 1: Event generates an interrupt when it occurs

Copyright © 2025 Texas Instruments Incorporated

Table 11-1439. CSI2_IRQENABLE Register Field Descriptions (continued)

Bit	Field	Type	Reset	Description
0	CONTEXT0	R/W	0h	Context 0 0: Event is masked 1: Event generates an interrupt when it occurs

Copyright © 2025 Texas Instruments Incorporated

11.6.1.1.3.5.2.6 CSI2_CTRL Register (Offset = 40h) [Reset = 00000000h]

CSI2_CTRL is shown in Table 11-1440.

Return to the Summary Table.

GLOBAL CONTROL REGISTER This register controls the CSI2 RECEIVER module. This register shall not be modified dynamically (except IF_EN bit field).

Table 11-1440. CSI2_CTRL Register Field Descriptions

Bit	Field	Type	Reset	Description
31-23	RES7	R	0h	RESERVE FIELD
22-20	MFLAG_LEVH	R/W	0h	RESERVE FIELD
19-17	MFLAG_LEVL	R/W	0h	RESERVE FIELD
16	BURST_SIZE_EXPAND	R/W	0h	Sets the DMA burst size on the L3 interconnect. 0: Use the burst size defined in the BURST_SIZE register 1: Allow generation of 16x 64-bit bursts
15	VP_CLK_EN	R/W	0h	RESERVE FIELD
14	STREAMING	R/W	0h	Streaming mode 0: Disable 1: Enable
13	NON_POSTED_WRITE	R/W	0h	Not Posted Writes 0: Disable 1: Enable
12	RES8	R	0h	RESERVE FIELD
11	VP_ONLY_EN	R/W	0h	RESERVE FIELD
10	STREAMING_32_BIT	R/W	0h	Indicates if 64-bit or 32-bit streaming burst is used. Valid only if CSI2_CTRL.STREAMING=1 0: 64-bit streaming burst is used byte enable pattern is 0xFF 1: 32-bit streaming burst is used byte enable pattern is 0x0F
9-8	VP_OUT_CTRL	R/W	0h	RESERVE FIELD
7	DBG_EN	R/W	0h	Enables the debug mode. 0: Disable 1: Enable
6-5	BURST_SIZE	R/W	0h	Sets the DMA burst size on the L3 interconnect. 0x 0: 1x64 OCP writes 0x 1: 2x64 OCP writes 0x 2: 4x64 OCP writes 0x 3: 8x64 OCP writes
4	ENDIANNESS	R/W	0h	Select endianness for YUV422 8 bit and YUV420 legacy formats. 0: Use native MIPI CSI2 endianness: Little endian for all formats except for YUV422 8b and YUV420 Legacy which a big endian. 1: Store all pixel formats little endian.
3	FRAME	R/W	0h	Set the modality in which IF_EN works. 0: If IF_EN = 0 the interface is disabled immediately. 1: If IF_EN = 1 the interface is disabled after all FEC sync code have been received for the active contexts.
2	ECC_EN	R/W	0h	Enables the Error Correction Code check for the received header (short and long packets for all virtual channel ids). 0: Disabled 1: Enabled
1	SECURE	R/W	0h	RESERVE FIELD

Copyright © 2025 Texas Instruments Incorporated

Table 11-1440. CSI2_CTRL Register Field Descriptions (continued)

Bit	Field	Type	Reset	Description
0	IF_EN	R/W	0h	Enables the physical interface to the module. 0: The interface is disabled. If FRAME = 0, it is disabled immediately. If FRAME = 1, it is disabled when each context has received the FEC sync code. 1: The interface is enabled immediately, the data acquisition starts on the next FSC sync code. Writing '1' to this register when the current value is '0' has the effect to clear the output FIFO. The pixel data of the following frame will be written in the PING buffer, i.e., the CSI2_CTX_CTRL.PING_PONG bits are reset to '0' as well.

Copyright © 2025 Texas Instruments Incorporated

11.6.1.1.3.5.2.7 CSI2_DBG_H Register (Offset = 44h) [Reset = 00000000h]

CSI2_DBG_H is shown in Table 11-1441.

Return to the Summary Table.

DEBUG REGISTER (Header) This register provides a way to debug the CSI2 RECEIVER module with no image sensor connected to the module. The debug mode is enabled by CSI2_CTRL.DBG_EN. Only full 32-bit values shall be written. The register is

Table 11-1441. CSI2_DBG_H Register Field Descriptions

Bit	Field	Type	Reset	Description
31-0	DBG	W	0h	32-bit input value.

Copyright © 2025 Texas Instruments Incorporated

11.6.1.1.3.5.2.8 CSI2_GNQ Register (Offset = 48h) [Reset = 0000001Bh]

CSI2_GNQ is shown in Table 11-1442.

Return to the Summary Table.

GENERIC PARAMETER REGISTER This register provide a way to read the generic parameters used in the design.

Table 11-1442. CSI2_GNQ Register Field Descriptions

Bit	Field	Type	Reset	Description
31-6	RES9	R	0h	RESERVE FIELD
5-2	FIFODEPTH	R	6h	Output FIFO size in multiple of 68 bits. Read 0x2: 8x 68 bits Read 0x3: 16x 68 bits Read 0x4: 32x 68 bits Read 0x5: 64x 68 bits Read 0x6: 128 x 68 bits Read 0x7: 256 x 68 bits
1-0	NBCONTEXTS	R	3h	Number of contexts supported by the module. Read 0x0: 1 Context Read 0x1: 2 Contexts Read 0x2: 4 Contexts Read 0x3: 8 Contexts

Copyright © 2025 Texas Instruments Incorporated

11.6.1.1.3.5.2.9 CSI2_COMPLEXIO_CFG2 Register (Offset = 4Ch) [Reset = 00000000h]

CSI2_COMPLEXIO_CFG2 is shown in Table 11-1443.

Return to the Summary Table.

COMPLEX IO CONFIGURATION REGISTER for the complex IO #2 This register contains the lane configuration for the order and position of the lanes (clock and data) and the polarity order for the control of the PHY differential signals in addit

Table 11-1443. CSI2_COMPLEXIO_CFG2 Register Field Descriptions

Bit	Field	Type	Reset	Description
31	RES10	R	0h	RESERVE FIELD
30	RESET_CTRL	R/W	0h	RESERVE FIELD
29	RESET_DONE	R	0h	RESERVE FIELD
28-27	PWR_CMD	R/W	0h	RESERVE FIELD
26-25	PWR_STATUS	R	0h	RESERVE FIELD
24	PWR_AUTO	R/W	0h	RESERVE FIELD
23-20	RES11	R	0h	RESERVE FIELD
19	DATA4_POL	R/W	0h	RESERVE FIELD
18-16	DATA4_POSITION	R/W	0h	RESERVE FIELD
15	DATA3_POL	R/W	0h	RESERVE FIELD
14-12	DATA3_POSITION	R/W	0h	RESERVE FIELD
11	DATA2_POL	R/W	0h	RESERVE FIELD
10-8	DATA2_POSITION	R/W	0h	RESERVE FIELD
7	DATA1_POL	R/W	0h	RESERVE FIELD
6-4	DATA1_POSITION	R/W	0h	RESERVE FIELD
3	CLOCK_POL	R/W	0h	RESERVE FIELD
2-0	CLOCK_POSITION	R/W	0h	RESERVE FIELD

Copyright © 2025 Texas Instruments Incorporated

11.6.1.1.3.5.2.10 CSI2_COMPLEXIO_CFG1 Register (Offset = 50h) [Reset = 00000000h]

CSI2_COMPLEXIO_CFG1 is shown in Table 11-1444.

Return to the Summary Table.

COMPLEXIO CONFIGURATION REGISTER for the complex IO #1 This register contains the lane configuration for the order and position of the lanes (clock and data) and the polarity order for the control of the PHY differential signals in additi

Table 11-1444. CSI2_COMPLEXIO_CFG1 Register Field Descriptions

Bit	Field	Type	Reset	Description
31	RES12	R	0h	RESERVE FIELD
30	RESET_CTRL	R/W	0h	Controls the reset of the complex IO 0: Complex IO reset active. 1: Complex IO reset de-asserted.
29	RESET_DONE	R	0h	Internal reset monitoring of the power domain using the PPI byte clock from the complex io Read 0: Internal module reset is on going. Read 1: Reset completed.
28-27	PWR_CMD	R/W	0h	Command for power control of the complex io 0x 0: Command to change to OFF state 0x 1: Command to change to ON state 0x 2: Command to change to Ultra Low Power state
26-25	PWR_STATUS	R	0h	Status of the power control of the complex io Read 0x0: Complex IO in OFF state Read 0x1: Complex IO in ON state Read 0x2: Complex IO in Ultra Low Power state
24	PWR_AUTO	R/W	0h	Automatic switch between ULP and ON states based on ULPM signals from complex iO 0: Disable 1: Enable
23-20	RES13	R	0h	RESERVE FIELD
19	DATA4_POL	R/W	0h	+/- differential pin order of DATA lane 4. 0: +/- pin order 1: -/+ pin order
18-16	DATA4_POSITION	R/W	0h	Position and order of the DATA lane 4. The values 6 and 7 are reserved. 0x 0: Not used/connected 0x 1: Data lane 4 is at the position 1. 0x 2: Data lane 4 is at the position 2. 0x 3: Data lane 4 is at the position 3. 0x 4: Data lane 4 is at the position 4. 0x 5: Data lane 4 is at the position 5.
15	DATA3_POL	R/W	0h	+/- differential pin order of DATA lane 3. 0: +/- pin order 1: -/+ pin order

Copyright © 2025 Texas Instruments Incorporated

Table 11-1444. CSI2_COMPLEXIO_CFG1 Register Field Descriptions (continued)

Bit	Field	Type	Reset	Description
14-12	DATA3_POSITION	R/W	0h	Position and order of the DATA lane 3. The values 6 and 7 are reserved. 0x 0: Not used/connected 0x 1: Data lane 3 is at the position 1. 0x 2: Data lane 3 is at the position 2. 0x 3: Data lane 3 is at the position 3. 0x 4: Data lane 3 is at the position 4. 0x 5: Data lane 3 is at the position 5.
11	DATA2_POL	R/W	0h	+/- differential pin order of DATA lane 2. 0: +/- pin order 1: -/+ pin order
10-8	DATA2_POSITION	R/W	0h	Position and order of the DATA lane 2. The values 6 and 7 are reserved. 0x 0: Not used/connected 0x 1: Data lane 2 is at the position 1. 0x 2: Data lane 2 is at the position 2. 0x 3: Data lane 2 is at the position 3. 0x 4: Data lane 2 is at the position 4. 0x 5: Data lane 2 is at the position 5.
7	DATA1_POL	R/W	0h	+/- differential pin order of DATA lane 1. 0: +/- pin order 1: -/+ pin order
6-4	DATA1_POSITION	R/W	0h	Position and order of the DATA lane 1. 0, 6 and 7 are reserved. The data lane 1 is always present. 0x 1: Data lane 1 is at the position 1. 0x 2: Data lane 1 is at the position 2. 0x 3: Data lane 1 is at the position 3. 0x 4: Data lane 1 is at the position 4. 0x 5: Data lane 1 is at the position 5.
3	CLOCK_POL	R/W	0h	+/- differential pin order of CLOCK lane. 0: +/- pin order 1: -/+ pin order
2-0	CLOCK_POSITION	R/W	0h	Position and order of the CLOCK lane. 0, 6 and 7 are reserved. The clock lane is always present. 0x 1: Clock lane is at the position 1. 0x 2: Clock lane is at the position 2. 0x 3: Clock lane is at the position 3. 0x 4: Clock lane is at the position 4. 0x 5: Clock lane is at the position 5.

Copyright © 2025 Texas Instruments Incorporated

11.6.1.1.3.5.2.11 CSI2_COMPLEXIO1_IRQSTATUS Register (Offset = 54h) [Reset = 00000000h]

CSI2_COMPLEXIO1_IRQSTATUS is shown in Table 11-1445.

Return to the Summary Table.

INTERRUPT STATUS REGISTER - All errors from complex IO #1

Table 11-1445. CSI2_COMPLEXIO1_IRQSTATUS Register Field Descriptions

Bit	Field	Type	Reset	Description
31-27	RES14	R	0h	RESERVE FIELD
26	STATEALLULPMEXIT	R/W	0h	At least one of the active lanes has exit the ULPM 0: READS: Event is false. WRITES: Status bit unchanged. 1: READS: Event is true (pending). WRITES: Status bit is reset. - (RW W1toClr)
25	STATEALLULPMENTER	R/W	0h	All active lanes are entering in ULPM. 0: READS: Event is false. WRITES: Status bit unchanged. 1: READS: Event is true (pending). WRITES: Status bit is reset. - (RW W1toClr)
24	STATEULPM5	R/W	0h	Lane #5 in Ultra Low Power Mode 0: READS: Event is false. WRITES: Status bit unchanged. 1: READS: Event is true (pending). WRITES: Status bit is reset. - (RW W1toClr)
23	STATEULPM4	R/W	0h	Lane #4 in Ultra Low Power Mode 0: READS: Event is false. WRITES: Status bit unchanged. 1: READS: Event is true (pending). WRITES: Status bit is reset. - (RW W1toClr)
22	STATEULPM3	R/W	0h	Lane #3 in Ultra Low Power Mode 0: READS: Event is false. WRITES: Status bit unchanged. 1: READS: Event is true (pending). WRITES: Status bit is reset. - (RW W1toClr)
21	STATEULPM2	R/W	0h	Lane #2 in Ultra Low Power Mode 0: READS: Event is false. WRITES: Status bit unchanged. 1: READS: Event is true (pending). WRITES: Status bit is reset. - (RW W1toClr)
20	STATEULPM1	R/W	0h	Lane #1 in Ultra Low Power Mode 0: READS: Event is false. WRITES: Status bit unchanged. 1: READS: Event is true (pending). WRITES: Status bit is reset. - (RW W1toClr)
19	ERRCONTROL5	R/W	0h	Control error for lane #5 0: READS: Event is false. WRITES: Status bit unchanged. 1: READS: Event is true (pending). WRITES: Status bit is reset. - (RW W1toClr)

Copyright © 2025 Texas Instruments Incorporated

Table 11-1445. CSI2_COMPLEXIO1_IRQSTATUS Register Field Descriptions (continued)

Bit	Field	Type	Reset	Description
18	ERRCONTROL4	R/W	0h	Control error for lane #4 0: READS: Event is false. WRITES: Status bit unchanged. 1: READS: Event is true (pending). WRITES: Status bit is reset. - (RW W1toClr)
17	ERRCONTROL3	R/W	0h	Control error for lane #3 0: READS: Event is false. WRITES: Status bit unchanged. 1: READS: Event is true (pending). WRITES: Status bit is reset. - (RW W1toClr)
16	ERRCONTROL2	R/W	0h	Control error for lane #2 0: READS: Event is false. WRITES: Status bit unchanged. 1: READS: Event is true (pending). WRITES: Status bit is reset. - (RW W1toClr)
15	ERRCONTROL1	R/W	0h	Control error for lane #1 0: READS: Event is false. WRITES: Status bit unchanged. 1: READS: Event is true (pending). WRITES: Status bit is reset. - (RW W1toClr)
14	ERRESC5	R/W	0h	Escape entry error for lane #5 0: READS: Event is false. WRITES: Status bit unchanged. 1: READS: Event is true (pending). WRITES: Status bit is reset. - (RW W1toClr)
13	ERRESC4	R/W	0h	Escape entry error for lane #4 0: READS: Event is false. WRITES: Status bit unchanged. 1: READS: Event is true (pending). WRITES: Status bit is reset. - (RW W1toClr)
12	ERRESC3	R/W	0h	Escape entry error for lane #3 0: READS: Event is false. WRITES: Status bit unchanged. 1: READS: Event is true (pending). WRITES: Status bit is reset. - (RW W1toClr)
11	ERRESC2	R/W	0h	Escape entry error for lane #2 0: READS: Event is false. WRITES: Status bit unchanged. 1: READS: Event is true (pending). WRITES: Status bit is reset. - (RW W1toClr)
10	ERRESC1	R/W	0h	Escape entry error for lane #1 0: READS: Event is false. WRITES: Status bit unchanged. 1: READS: Event is true (pending). WRITES: Status bit is reset. - (RW W1toClr)
9	ERRSOTSYNCHS5	R/W	0h	Start of transmission sync error for lane #5 0: READS: Event is false. WRITES: Status bit unchanged. 1: READS: Event is true (pending). WRITES: Status bit is reset. - (RW W1toClr)

Copyright © 2025 Texas Instruments Incorporated

Table 11-1445. CSI2_COMPLEXIO1_IRQSTATUS Register Field Descriptions (continued)

Bit	Field	Type	Reset	Description
8	ERRSOTSYNCHS4	R/W	0h	Start of transmission sync error for lane #4 0: READS: Event is false. WRITES: Status bit unchanged. 1: READS: Event is true (pending). WRITES: Status bit is reset. - (RW W1toClr)
7	ERRSOTSYNCHS3	R/W	0h	Start of transmission sync error for lane #3 0: READS: Event is false. WRITES: Status bit unchanged. 1: READS: Event is true (pending). WRITES: Status bit is reset. - (RW W1toClr)
6	ERRSOTSYNCHS2	R/W	0h	Start of transmission sync error for lane #2 0: READS: Event is false. WRITES: Status bit unchanged. 1: READS: Event is true (pending). WRITES: Status bit is reset. - (RW W1toClr)
5	ERRSOTSYNCHS1	R/W	0h	Start of transmission sync error for lane #1 0: READS: Event is false. WRITES: Status bit unchanged. 1: READS: Event is true (pending). WRITES: Status bit is reset. - (RW W1toClr)
4	ERRSOTHS5	R/W	0h	Start of transmission error for lane #5 0: READS: Event is false. WRITES: Status bit unchanged. 1: READS: Event is true (pending). WRITES: Status bit is reset. - (RW W1toClr)
3	ERRSOTHS4	R/W	0h	Start of transmission error for lane #4 0: READS: Event is false. WRITES: Status bit unchanged. 1: READS: Event is true (pending). WRITES: Status bit is reset. - (RW W1toClr)
2	ERRSOTHS3	R/W	0h	Start of transmission error for lane #3 0: READS: Event is false. WRITES: Status bit unchanged. 1: READS: Event is true (pending). WRITES: Status bit is reset. - (RW W1toClr)
1	ERRSOTHS2	R/W	0h	Start of transmission error for lane #2 0: READS: Event is false. WRITES: Status bit unchanged. 1: READS: Event is true (pending). WRITES: Status bit is reset. - (RW W1toClr)
0	ERRSOTHS1	R/W	0h	Start of transmission error for lane #1 0: READS: Event is false. WRITES: Status bit unchanged. 1: READS: Event is true (pending). WRITES: Status bit is reset. - (RW W1toClr)

Copyright © 2025 Texas Instruments Incorporated

11.6.1.1.3.5.2.12 CSI2_COMPLEXIO2_IRQSTATUS Register (Offset = 58h) [Reset = 00000000h]

CSI2_COMPLEXIO2_IRQSTATUS is shown in Table 11-1446.

Return to the Summary Table.

INTERRUPT STATUS REGISTER - All errors from complex IO #2

Table 11-1446. CSI2_COMPLEXIO2_IRQSTATUS Register Field Descriptions

Bit	Field	Type	Reset	Description
31-27	RES15	R	0h	RESERVE FIELD
26	STATEALLULPMEXIT	R/W	0h	RESERVE FIELD
25	STATEALLULPMENTER	R/W	0h	RESERVE FIELD
24	STATEULPM5	R/W	0h	RESERVE FIELD
23	STATEULPM4	R/W	0h	RESERVE FIELD
22	STATEULPM3	R/W	0h	RESERVE FIELD
21	STATEULPM2	R/W	0h	RESERVE FIELD
20	STATEULPM1	R/W	0h	RESERVE FIELD
19	ERRCONTROL5	R/W	0h	RESERVE FIELD
18	ERRCONTROL4	R/W	0h	RESERVE FIELD
17	ERRCONTROL3	R/W	0h	RESERVE FIELD
16	ERRCONTROL2	R/W	0h	RESERVE FIELD
15	ERRCONTROL1	R/W	0h	RESERVE FIELD
14	ERRESC5	R/W	0h	RESERVE FIELD
13	ERRESC4	R/W	0h	RESERVE FIELD
12	ERRESC3	R/W	0h	RESERVE FIELD
11	ERRESC2	R/W	0h	RESERVE FIELD
10	ERRESC1	R/W	0h	RESERVE FIELD
9	ERRSOTSYNCHS5	R/W	0h	RESERVE FIELD
8	ERRSOTSYNCHS4	R/W	0h	RESERVE FIELD
7	ERRSOTSYNCHS3	R/W	0h	RESERVE FIELD
6	ERRSOTSYNCHS2	R/W	0h	RESERVE FIELD
5	ERRSOTSYNCHS1	R/W	0h	RESERVE FIELD
4	ERRSOTHS5	R/W	0h	RESERVE FIELD
3	ERRSOTHS4	R/W	0h	RESERVE FIELD
2	ERRSOTHS3	R/W	0h	RESERVE FIELD
1	ERRSOTHS2	R/W	0h	RESERVE FIELD
0	ERRSOTHS1	R/W	0h	RESERVE FIELD

Copyright © 2025 Texas Instruments Incorporated

11.6.1.1.3.5.2.13 CSI2_SHORT_PACKET Register (Offset = 5Ch) [Reset = 00000000h]

CSI2_SHORT_PACKET is shown in Table 11-1447.

Return to the Summary Table.

SHORT PACKET INFORMATION - This register sets the 24-bit DATA_ID + Short Packet Data Field when the data type is between 0x8 and x0F

Table 11-1447. CSI2_SHORT_PACKET Register Field Descriptions

Bit	Field	Type	Reset	Description
31-24	RES16	R	0h	RESERVE FIELD
23-0	SHORT_PACKET	R	0h	Short Packet information: DATA ID + DATA FIELD

Copyright © 2025 Texas Instruments Incorporated

11.6.1.1.3.5.2.14 CSI2_COMPLEXIO1_IRQENABLE Register (Offset = 60h) [Reset = 00000000h]

CSI2_COMPLEXIO1_IRQENABLE is shown in Table 11-1448.

Return to the Summary Table.

INTERRUPT ENABLE REGISTER - All errors from complex IO #1

Table 11-1448. CSI2_COMPLEXIO1_IRQENABLE Register Field Descriptions

Bit	Field	Type	Reset	Description
31-27	RES17	R	0h	RESERVE FIELD
26	STATEALLULPMEXIT	R/W	0h	At least one of the active lanes has exit the ULPM 0: Event is masked 1: Event generates an interrupt when it occurs
25	STATEALLULPMENTER	R/W	0h	All active lanes are entering in ULPM. 0: Event is masked 1: Event generates an interrupt when it occurs
24	STATEULPM5	R/W	0h	Lane #5 in Ultra Low Power Mode 0: Event is masked 1: Event generates an interrupt when it occurs
23	STATEULPM4	R/W	0h	Lane #4 in Ultra Low Power Mode 0: Event is masked 1: Event generates an interrupt when it occurs
22	STATEULPM3	R/W	0h	Lane #3 in Ultra Low Power Mode 0: Event is masked 1: Event generates an interrupt when it occurs
21	STATEULPM2	R/W	0h	Lane #2 in Ultra Low Power Mode 0: Event is masked 1: Event generates an interrupt when it occurs
20	STATEULPM1	R/W	0h	Lane #1 in Ultra Low Power Mode 0: Event is masked 1: Event generates an interrupt when it occurs
19	ERRCONTROL5	R/W	0h	Control error for lane #5 0: Event is masked 1: Event generates an interrupt when it occurs
18	ERRCONTROL4	R/W	0h	Control error for lane #4 0: Event is masked 1: Event generates an interrupt when it occurs
17	ERRCONTROL3	R/W	0h	Control error for lane #3 0: Event is masked 1: Event generates an interrupt when it occurs
16	ERRCONTROL2	R/W	0h	Control error for lane #2 0: Event is masked 1: Event generates an interrupt when it occurs
15	ERRCONTROL1	R/W	0h	Control error for lane #1 0: Event is masked 1: Event generates an interrupt when it occurs
14	ERRESC5	R/W	0h	Escape entry error for lane #5 0: Event is masked 1: Event generates an interrupt when it occurs
13	ERRESC4	R/W	0h	Escape entry error for lane #4 0: Event is masked 1: Event generates an interrupt when it occurs
12	ERRESC3	R/W	0h	Escape entry error for lane #3 0: Event is masked 1: Event generates an interrupt when it occurs
11	ERRESC2	R/W	0h	Escape entry error for lane #2 0: Event is masked 1: Event generates an interrupt when it occurs

Copyright © 2025 Texas Instruments Incorporated

Table 11-1448. CSI2_COMPLEXIO1_IRQENABLE Register Field Descriptions (continued)

Bit	Field	Type	Reset	Description
10	ERRESC1	R/W	0h	Escape entry error for lane #1 0: Event is masked 1: Event generates an interrupt when it occurs
9	ERRSOTSYNCHS5	R/W	0h	Start of transmission sync error for lane #5 0: Event is masked 1: Event generates an interrupt when it occurs
8	ERRSOTSYNCHS4	R/W	0h	Start of transmission sync error for lane #4 0: Event is masked 1: Event generates an interrupt when it occurs
7	ERRSOTSYNCHS3	R/W	0h	Start of transmission sync error for lane #3 0: Event is masked 1: Event generates an interrupt when it occurs
6	ERRSOTSYNCHS2	R/W	0h	Start of transmission sync error for lane #2 0: Event is masked 1: Event generates an interrupt when it occurs
5	ERRSOTSYNCHS1	R/W	0h	Start of transmission sync error for lane #1 0: Event is masked 1: Event generates an interrupt when it occurs
4	ERRSOTHS5	R/W	0h	Start of transmission error for lane #5 0: Event is masked 1: Event generates an interrupt when it occurs
3	ERRSOTHS4	R/W	0h	Start of transmission error for lane #4 0: Event is masked 1: Event generates an interrupt when it occurs
2	ERRSOTHS3	R/W	0h	Start of transmission error for lane #3 0: Event is masked 1: Event generates an interrupt when it occurs
1	ERRSOTHS2	R/W	0h	Start of transmission error for lane #2 0: Event is masked 1: Event generates an interrupt when it occurs
0	ERRSOTHS1	R/W	0h	Start of transmission error for lane #1 0: Event is masked 1: Event generates an interrupt when it occurs

Copyright © 2025 Texas Instruments Incorporated

11.6.1.1.3.5.2.15 CSI2_COMPLEXIO2_IRQENABLE Register (Offset = 64h) [Reset = 00000000h]

CSI2_COMPLEXIO2_IRQENABLE is shown in Table 11-1449.

Return to the Summary Table.

INTERRUPT ENABLE REGISTER - All errors from complex IO #2

Table 11-1449. CSI2_COMPLEXIO2_IRQENABLE Register Field Descriptions

Bit	Field	Type	Reset	Description
31-27	RES18	R	0h	RESERVE FIELD
26	STATEALLULPMEXIT	R/W	0h	RESERVE FIELD
25	STATEALLULPMENTER	R/W	0h	RESERVE FIELD
24	STATEULPM5	R/W	0h	RESERVE FIELD
23	STATEULPM4	R/W	0h	RESERVE FIELD
22	STATEULPM3	R/W	0h	RESERVE FIELD
21	STATEULPM2	R/W	0h	RESERVE FIELD
20	STATEULPM1	R/W	0h	RESERVE FIELD
19	ERRCONTROL5	R/W	0h	RESERVE FIELD
18	ERRCONTROL4	R/W	0h	RESERVE FIELD
17	ERRCONTROL3	R/W	0h	RESERVE FIELD
16	ERRCONTROL2	R/W	0h	RESERVE FIELD
15	ERRCONTROL1	R/W	0h	RESERVE FIELD
14	ERRESC5	R/W	0h	RESERVE FIELD
13	ERRESC4	R/W	0h	RESERVE FIELD
12	ERRESC3	R/W	0h	RESERVE FIELD
11	ERRESC2	R/W	0h	RESERVE FIELD
10	ERRESC1	R/W	0h	RESERVE FIELD
9	ERRSOTSYNCHS5	R/W	0h	RESERVE FIELD
8	ERRSOTSYNCHS4	R/W	0h	RESERVE FIELD
7	ERRSOTSYNCHS3	R/W	0h	RESERVE FIELD
6	ERRSOTSYNCHS2	R/W	0h	RESERVE FIELD
5	ERRSOTSYNCHS1	R/W	0h	RESERVE FIELD
4	ERRSOTHS5	R/W	0h	RESERVE FIELD
3	ERRSOTHS4	R/W	0h	RESERVE FIELD
2	ERRSOTHS3	R/W	0h	RESERVE FIELD
1	ERRSOTHS2	R/W	0h	RESERVE FIELD
0	ERRSOTHS1	R/W	0h	RESERVE FIELD

Copyright © 2025 Texas Instruments Incorporated

11.6.1.1.3.5.2.16 CSI2_DBG_P Register (Offset = 68h) [Reset = 00000000h]

CSI2_DBG_P is shown in Table 11-1450.

Return to the Summary Table.

DEBUG REGISTER (Payload) This register provides a way to debug the CSI2 RECEIVER module with no image sensor connected to the module. The debug mode is enabled by CSI2_CTRL.DBG_EN. Only full 32-bit values shall be written. The register is

Table 11-1450. CSI2_DBG_P Register Field Descriptions

Bit	Field	Type	Reset	Description
31-0	DBG	W	0h	32-bit input value.

Copyright © 2025 Texas Instruments Incorporated

11.6.1.1.3.5.2.17 CSI2_TIMING Register (Offset = 6Ch) [Reset = 7FFF7FFFh]

CSI2_TIMING is shown in Table 11-1451.

Return to the Summary Table.

TIMING REGISTER This register controls the CSI2 RECEIVER module. This register shall not be modified while CSI2_CTRL.IF_EN is set to '1'. It is used to indicate the number of L3 cycles for the Stop State monitoring.

Table 11-1451. CSI2_TIMING Register Field Descriptions

Bit	Field	Type	Reset	Description
31	FORCE_RX_MODE_IO2	R/W	0h	RESERVE FIELD
30	STOP_STATE_X16_IO2	R/W	1h	RESERVE FIELD
29	STOP_STATE_X4_IO2	R/W	1h	RESERVE FIELD
28-16	STOP_STATE_COUNTER_IO2	R/W	1FFFh	RESERVE FIELD
15	FORCE_RX_MODE_IO1	R/W	0h	Control of ForceRxMode signal 0: De-assertion of ForceRxMode. The HW reset the bit at the end of the Force RX Mode assertion. The SW can reset the bit in order to stop the assertion of the ForceRXMode signal prior to the completion of the period. 1: Assertion of ForceRxMode
14	STOP_STATE_X16_IO1	R/W	1h	Multiplication factor for the number of L3 cycles defined in STOP_STATE_COUNTER bit-field 0: The number of L3 cycles defined in STOP_STATE _COUNTER is multiplied by 1x 1: The number of L3 cycles defined in STOP_STATE _COUNTER is multiplied by 16x
13	STOP_STATE_X4_IO1	R/W	1h	Multiplication factor for the number of L3 cycles defined in STOP_STATE_COUNTER bit-field 0: The number of L3 cycles defined in STOP_STATE _COUNTER is multiplied by 1x 1: The number of L3 cycles defined in STOP_STATE _COUNTER is multiplied by 4x
12-0	STOP_STATE_COUNTER_IO1	R/W	1FFFh	Stop State counter for monitoring. It indicates the number of L3 to monitor for Stop State before de-asserting ForceRxMode (Complex IO #1). The value is from 0 to 8191.

Copyright © 2025 Texas Instruments Incorporated

11.6.1.1.3.5.2.18 CSI2_CTX0_CTRL1 Register (Offset = 70h) [Reset = 00010008h]

CSI2_CTX0_CTRL1 is shown in Table 11-1452.

Return to the Summary Table.

CONTROL REGISTER - Context This register controls the Context. This register is shadowed: modifications are taken into account after the next FSC sync code.

Table 11-1452. CSI2_CTX0_CTRL1 Register Field Descriptions

Bit	Field	Type	Reset	Description
31	BYTESWAP	R/W	0h	Allows swapping bytes two by two in the payload data. It doesn't affect - short packets - long packet header or footers - CRC calculation The purpose is to by swap data send to the OCP port and/or video port 0: Disabled 1: Enabled
30	GENERIC	R/W	0h	Enables the generic mode. 0: Disabled. Data is received according to CSI2_CTX_CTRL1.FORMAT and the long packet code transmitted in the MIPI stream is used. 1: Enabled. Data is received according to CSI2_CTX_CTRL1.FORMAT and the long packet code transmitted in the MIPI stream is ignored.
29	RES19	R	0h	RESERVE FIELD
28	HSCALE	R/W	0h	Enable horizontal downscaling by a factor of two. Applies to RAW data when transcoding is enabled. Must be disabled when transcoding is disabled. 0: Disable 1: Enable
27-24	TRANSCODE	R/W	0h	Enables image transcoding. When this features is enabled: - the data format from the camera is defined by the FORMAT register - the format after transcode is defined by the TRANSCODE register. The memory storage / video port formats is defined by the TRANSCODE register 0x 0: Feature disabled. 0x 1: Outputs DPCM compressed RAW10 data. After compression, pixels are coded on 8 bits. Data in memory is organized as regular RAW8 data 0x 2: Outputs DPCM compressed RAW12 data. After compression, pixels are coded on 8 bits. Data in memory is organized as regular RAW8 data 0x 3: Outputs ALAW compressed RAW10 data. After compression, pixels are coded on 8 bits. Data in memory is organized as regular RAW8 data. 0x 4: Outputs uncompressed RAW8 data. Data in memory is organized as regular RAW8 data 0x 5: Outputs uncompressed RAW10 data. Data in memory is organized as regular RAW10+EXP16 data 0x 6: Outputs uncompressed RAW10 data. Data in memory is organized as regular packed RAW10 data 0x 7: Outputs uncompressed RAW12 data. Data in memory is organized as regular RAW12+EXP16 data 0x 8: Outputs uncompressed RAW12 data. Data in memory is organized as regular packed RAW12 data 0x 9: Outputs uncompressed RAW14 data.
23-16	FEC_NUMBER	R/W	1h	Number of FEC to receive between using swap of CSI2_CTX_DAT_PING_ADDR and CSI2_CTX_DAT_PONG_ADDR for the calculation of the address in memory. (shall be used only in interlace mode, otherwise set to '1')

Copyright © 2025 Texas Instruments Incorporated

Table 11-1452. CSI2_CTX0_CTRL1 Register Field Descriptions (continued)

Bit	Field	Type	Reset	Description
15-8	COUNT	R/W	0h	Sets the number of frame to acquire. Once the frame acquisition starts, the COUNT value is decremented after every frame. When COUNT reaches 0, the FRAME_NUMBER_IRQ interrupt is triggered and CTX_EN is set to '0'. Writes to this bit field are controlled by the COUNT_UNLOCK bit. During the same OCP write access , the bit-field COUNT_UNLOCK shall be written in addition to COUNT bit-field in order to change the COUNT value. COUNT can be overwritten dynamically with a new count value." 0: Infinite number of frames (no count). 1: 1 frame to acquire ... 255: 255 frames to acquire.
7	EOF_EN	R/W	0h	Indicates if the end of frame signal shall be asserted at the end of the frame Read 0: The end of frame signal is not asserted at the end of each frame. Read 1: The end of frame signal is asserted at the end of each frame.
6	EOL_EN	R/W	0h	Indicates if the end of line signal shall be asserted at the end of the line. Read 0: The end of line signal is not asserted at the end of each frame. Read 1: The end of line signal is asserted at the end of each frame.
5	CS_EN	R/W	0h	Enables the checksum check for the received payload (long packet only). 0: Disabled 1: Enabled
4	COUNT_UNLOCK	W	0h	Unlock writes to the COUNT bit field. Write 0: COUNT bit field is locked. Writes have no effect Write 1: COUNT bit field is unlocked. Writes are possible.
3	PING_PONG	R	1h	Indicates whether the PING or PONG destination address (CSI2_CTX_DAT_PING_ADDR or CSI2_CTX_DAT_PONG_ADDR) was used to write the last frame. This bit field toggles after every FEC_NUMBER FEC sync code received for the current context. Read 0: PING buffer Read 1: PONG buffer
2	VP_FORCE	R/W	0h	RESERVE FIELD
1	LINE_MODULO	R/W	0h	Line modulo configuration 0: CSI2_CTX_CTRL3.LINE_NUMBER is used once per frame for the generation of the LINE_NUMBER_IRQ. 1: CSI2_CTX_CTRL3.LINE_NUMBER is used as a modulo number for the generation of the LINE_NUMBER_IRQ (multiple times the interrupt can be generated for each frame)
0	CTX_EN	R/W	0h	Enables the Context 0: Disabled 1: Enabled

Copyright © 2025 Texas Instruments Incorporated

11.6.1.1.3.5.2.19 CSI2_CTX0_CTRL2 Register (Offset = 74h) [Reset = 00000000h]

CSI2_CTX0_CTRL2 is shown in Table 11-1453.

Return to the Summary Table.

CONTROL REGISTER - Context This register controls the Context. This register is shadowed: modifications are taken into account after the next FSC sync code (except for VIRTUAL_ID and FORMAT fields). The change of VIRTUIAL_ID and FORMAT ha

Table 11-1453. CSI2_CTX0_CTRL2 Register Field Descriptions

Bit	Field	Type	Reset	Description
31-16	FRAME	R	0h	Frame number. The CSI-2 protocol engine extracts the frame number from the SOF short packet sent by the camera.
15	RES20	R	0h	RESERVE FIELD
14-13	USER_DEF_MAPPING	R/W	0h	Selects the pixel format of USER_DEFINED in FORMAT 0x 0: RAW6 0x 1: RAW7 0x 2: RAW8 (not valid if FORMAT is USER_DEFINED_8_BIT_DATA_TYPE_x_EXP8 with x from 1 to 8)
12-11	VIRTUAL_ID	R/W	0h	Virtual channel ID 0x 0: Virtual Channel ID 0 0x 1: Virtual Channel ID 1 0x 2: Virtual Channel ID 2 0x 3: Virtual Channel ID 3
10	DPCM_PRED	R/W	0h	Selects the DPCM predictor. 0: The advanced predictor is used. Not supported for 10 – 8 – 10 algorithm. Performance limited to 1 pixel/cycle. 1: The simple predictor is used.

Copyright © 2025 Texas Instruments Incorporated

Table 11-1453. CSI2_CTX0_CTRL2 Register Field Descriptions (continued)

Bit	Field	Type	Reset	Description
9-0	FORMAT	R/W	0h	Data format selection. 0x 000: OTHERS (except NULL and BLANKING packets) 0x 012: Embedded 8-bit non-image data (e.g. JPEG) 0x 018: YUV420 8bit 0x 019: YUV420 10bit 0x01A: YUV420 8bit legacy 0x01C: YUV420 8bit + CSPS 0x01D: YUV420 10bit + CSPS 0x01E: YUV422 8bit 0x01F: YUV422 10bit 0x 022: RGB565 0x 024: RGB888 0x 028: RAW6 0x 029: RAW7 0x02A: RAW8 0x02B: RAW10 0x02C: RAW12 0x02D: RAW14 0x 033: RGB666 + EXP32_24 0x 040: USER_DEFINED_8_BIT_DATA_TYPE_1 0x 041: USER_DEFINED_8_BIT_DATA_TYPE_2 0x 042: USER_DEFINED_8_BIT_DATA_TYPE_3 0x 043: USER_DEFINED_8_BIT_DATA_TYPE_4 0x 044: USER_DEFINED_8_BIT_DATA_TYPE_5 0x 045: USER_DEFINED_8_BIT_DATA_TYPE_6 0x 046: USER_DEFINED_8_BIT_DATA_TYPE_7 0x 047: USER_DEFINED_8_BIT_DATA_TYPE_8 0x 068: RAW6 + EXP8 0x 069: RAW7 + EXP8 0x 080: USER_DEFINED_8_BIT_DATA_TYPE_1 + EXP8 0x 081: USER_DEFINED_8_BIT_DATA_TYPE_2 + EXP8 0x 082: USER_DEFINED_8_BIT_DATA_TYPE_3 + EXP8 0x 083: USER_DEFINED_8_BIT_DATA_TYPE_4 + EXP8 0x 084: USER_DEFINED_8_BIT_DATA_TYPE_5 + EXP8 0x 085: USER_DEFINED_8_BIT_DATA_TYPE_6 + EXP8 0x 086: USER_DEFINED_8_BIT_DATA_TYPE_7 + EXP8 0x 087: USER_DEFINED_8_BIT_DATA_TYPE_8 + EXP8 0x09E: YUV422 8bit + VP 0x0A 0: RGB444 + EXP16 0x0A 1: RGB555 + EXP16 0x0AB: RAW10 + EXP16 0x0AC: RAW12 + EXP16 0x0AD: RAW14 + EXP16 0x0DE: Same as YUV422 8bit + VP but data is send as 16-bit wide words to video port. Could be used together with the GENERIC and BYTESWAP features 0x0E 3: RGB666 + EXP32 0x0E 4: RGB888 + EXP32 0x0E 8: RAW6 + DPCM10 + VP 0x12A: RAW8 + VP 0x12C: RAW12 + VP 0x12D: RAW14 + VP 0x12F: RAW10 + VP 0x 140: USER_DEFINED_8_BIT_DATA_TYPE_1_DPCM12_VP 0x 141: USER_DEFINED_8_BIT_DATA_TYPE_2_DPCM12_VP 0x 142: USER_DEFINED_8_BIT_DATA_TYPE_3_DPCM12_VP 0x 143: USER_DEFINED_8_BIT_DATA_TYPE_4_DPCM12_VP 0x 144: USER_DEFINED_8_BIT_DATA_TYPE_5_DPCM12_VP 0x 145: USER_DEFINED_8_BIT_DATA_TYPE_6_DPCM12_VP 0x 146: USER_DEFINED_8_BIT_DATA_TYPE_7_DPCM12_VP 0x 147: USER_DEFINED_8_BIT_DATA_TYPE_8_DPCM12_VP 0x1C 0: USER_DEFINED_8_BIT_DATA_TYPE_1_DPCM12_EXP16 0x1C 1: USER_DEFINED_8_BIT_DATA_TYPE_2_DPCM12_EXP16 0x1C 2: USER_DEFINED_8_BIT_DATA_TYPE_3_DPCM12_EXP16 0x1C 3: USER_DEFINED_8_BIT_DATA_TYPE_4_DPCM12_EXP16 0x1C 4: USER_DEFINED_8_BIT_DATA_TYPE_5_DPCM12_EXP16 0x1C 5: USER_DEFINED_8_BIT_DATA_TYPE_6_DPCM12_EXP16 0x1C 6: USER_DEFINED_8_BIT_DATA_TYPE_7_DPCM12_EXP16 0x1C 7: USER_DEFINED_8_BIT_DATA_TYPE_8_DPCM12_EXP16 0x 229: RAW7 + DPCM10 + EXP16 0x2A 8: RAW6 + DPCM10 + EXP16 0x2AA: RAW8 + DPCM10 + EXP16 0x2C

Copyright © 2025 Texas Instruments Incorporated

Table 11-1453. CSI2_CTX0_CTRL2 Register Field Descriptions (continued)

Bit	Field	Type	Reset	Description
				0: USER_DEFINED_8_BIT_DATA_TYPE_1 + DPCM10 + EXP16 0x2C 1: USER_DEFINED_8_BIT_DATA_TYPE_2 + DPCM10 + EXP16 0x2C 2: USER_DEFINED_8_BIT_DATA_TYPE_3 + DPCM10 + EXP16 0x2C 3: USER_DEFINED_8_BIT_DATA_TYPE_4 + DPCM10 + EXP16 0x2C 4: USER_DEFINED_8_BIT_DATA_TYPE_5 + DPCM10 + EXP16 0x2C 5: USER_DEFINED_8_BIT_DATA_TYPE_6 + DPCM10 + EXP16 0x2C 6: USER_DEFINED_8_BIT_DATA_TYPE_7 + DPCM10 + EXP16 0x2C 7: USER_DEFINED_8_BIT_DATA_TYPE_8 + DPCM10 + EXP16 0x 329: RAW7 + DPCM10 + VP 0x32A: RAW8 + DPCM10 + VP 0x 340: USER_DEFINED_8_BIT_DATA_TYPE_1 + DPCM10 + VP 0x 341: USER_DEFINED_8_BIT_DATA_TYPE_2 + DPCM10 + VP 0x 342: USER_DEFINED_8_BIT_DATA_TYPE_3 + DPCM10 + VP 0x 343: USER_DEFINED_8_BIT_DATA_TYPE_4 + DPCM10 + VP 0x 344: USER_DEFINED_8_BIT_DATA_TYPE_5 + DPCM10 + VP 0x 345: USER_DEFINED_8_BIT_DATA_TYPE_6 + DPCM10 + VP 0x 346: USER_DEFINED_8_BIT_DATA_TYPE_7 + DPCM10 + VP 0x 347: USER_DEFINED_8_BIT_DATA_TYPE_8 + DPCM10 + VP 0x 368: RAW6 DPCM12 + VP 0x 369: RAW7 DPCM12 + EXP16 0x36A: RAW8 DPCM12 + EXP16 0x3A 8: RAW6 DPCM12 + EXP16 0x3A 9: RAW7 DPCM12 + VP 0x3AA: RAW8 DPCM12 + VP

Copyright © 2025 Texas Instruments Incorporated

11.6.1.1.3.5.2.20 CSI2_CTX0_DAT_OFST Register (Offset = 78h) [Reset = 00000000h]

CSI2_CTX0_DAT_OFST is shown in Table 11-1454.

Return to the Summary Table.

DATA MEM ADDRESS OFFSET REGISTER - Context This register sets the offset which is applied on the destination address after each line is written to memory. This register applies for both CSI2_CTX_DAT_PING_ADDR and CSI2_CTX_DAT_PONG_ADDR.

Table 11-1454. CSI2_CTX0_DAT_OFST Register Field Descriptions

Bit	Field	Type	Reset	Description
31-17	RES21	R	0h	RESERVE FIELD
16-5	OFST	R/W	0h	Line offset programmed in bytes (signed value 2's complement). If OFST = 0, the data is written contiguously in memory. Otherwise, OFST sets the destination offset between the first pixel of the previous line and the first pixel of the current line. Valid range: -2^{17} ~ (2^{17}-1)
4-0	RES	R	0h	RESERVE FIELD

Copyright © 2025 Texas Instruments Incorporated

11.6.1.1.3.5.2.21 CSI2_CTX0_DAT_PING_ADDR Register (Offset = 7Ch) [Reset = 00000000h]

CSI2_CTX0_DAT_PING_ADDR is shown in Table 11-1455.

Return to the Summary Table.

DATA MEM PING ADDRESS REGISTER - Context This register sets the 32-bit memory address where the pixel data are stored. The destination is double buffered: this register sets the PING address. Double buffering is enabled when the addresses

Table 11-1455. CSI2_CTX0_DAT_PING_ADDR Register Field Descriptions

Bit	Field	Type	Reset	Description
31-5	ADDR	R/W	0h	27 most significant bits of the 32-bit address.
4-0	RES	R	0h	RESERVE FIELD

Copyright © 2025 Texas Instruments Incorporated

11.6.1.1.3.5.2.22 CSI2_CTX0_DAT_PONG_ADDR Register (Offset = 80h) [Reset = 00000000h]

CSI2_CTX0_DAT_PONG_ADDR is shown in Table 11-1456.

Return to the Summary Table.

DATA MEM PONG ADDRESS REGISTER - Context This register sets the 32-bit memory address where the pixel data are stored. The destination is double buffered: this register sets the PONG address. Double buffering is enabled when the addresses

Table 11-1456. CSI2_CTX0_DAT_PONG_ADDR Register Field Descriptions

Bit	Field	Type	Reset	Description
31-5	ADDR	R/W	0h	27 most significant bits of the 32-bit address.
4-0	RES	R	0h	RESERVE FIELD

Copyright © 2025 Texas Instruments Incorporated

11.6.1.1.3.5.2.23 CSI2_CTX0_IRQENABLE Register (Offset = 84h) [Reset = 00000000h]

CSI2_CTX0_IRQENABLE is shown in Table 11-1457.

Return to the Summary Table.

INTERRUPT ENABLE REGISTER - Context This register regroups all the events related to Context.

Table 11-1457. CSI2_CTX0_IRQENABLE Register Field Descriptions

Bit	Field	Type	Reset	Description
31-9	RES22	R	0h	RESERVE FIELD
8	ECC_CORRECTION_IRQ	R/W	0h	Context - ECC has been used to correct the only 1-bit error (long packet only). 0: Event is masked 1: Event generates an interrupt when it occurs
7	LINE_NUMBER_IRQ	R/W	0h	Context - Line number is reached. 0: Event is masked 1: Event generates an interrupt when it occurs
6	FRAME_NUMBER_IRQ	R/W	0h	Context - Frame counter reached. 0: Event is masked 1: Event generates an interrupt when it occurs
5	CS_IRQ	R/W	0h	Context - Check-Sum of the payload mismatch detection 0: Event is masked 1: Event generates an interrupt when it occurs
4	RES23	R	0h	RESERVE FIELD
3	LE_IRQ	R/W	0h	Context - Line end sync code detection. 0: Event is masked 1: Event generates an interrupt when it occurs
2	LS_IRQ	R/W	0h	Context - Line start sync code detection. 0: Event is masked 1: Event generates an interrupt when it occurs
1	FE_IRQ	R/W	0h	Context - Frame end sync code detection. 0: Event is masked 1: Event generates an interrupt when it occurs
0	FS_IRQ	R/W	0h	Context - Frame start sync code detection. 0: Event is masked 1: Event generates an interrupt when it occurs

Copyright © 2025 Texas Instruments Incorporated

11.6.1.1.3.5.2.24 CSI2_CTX0_IRQSTATUS Register (Offset = 88h) [Reset = 00000000h]

CSI2_CTX0_IRQSTATUS is shown in Table 11-1458.

Return to the Summary Table.

INTERRUPT STATUS REGISTER - Context This register regroups all the events related to Context.

Table 11-1458. CSI2_CTX0_IRQSTATUS Register Field Descriptions

Bit	Field	Type	Reset	Description
31-9	RES24	R	0h	RESERVE FIELD
8	ECC_CORRECTION_IRQ	R/W	0h	Context - ECC has been used to do the correction of the only 1-bit error status (long packet only). 0: READS: Event is false. WRITES: Status bit unchanged. 1: READS: Event is true (pending). WRITES: Status bit is reset. . - (RW W1toClr)
7	LINE_NUMBER_IRQ	R/W	0h	Contexc - Line number reached status. 0: READS: Event is false. WRITES: Status bit unchanged. 1: READS: Event is true (pending). WRITES: Status bit is reset. - (RW W1toClr)
6	FRAME_NUMBER_IRQ	R/W	0h	Context - Frame counter reached status 0: READS: Event is false. WRITES: Status bit unchanged. 1: READS: Event is true (pending). WRITES: Status bit is reset. - (RW W1toClr)
5	CS_IRQ	R/W	0h	Context - Check-Sum mismatch status. 0: READS: Event is false. WRITES: Status bit unchanged. 1: READS: Event is true (pending). WRITES: Status bit is reset. - (RW W1toClr)
4	RES25	R	0h	RESERVE FIELD
3	LE_IRQ	R/W	0h	Context - Line end sync code detection status. 0: READS: Event is false. WRITES: Status bit unchanged. 1: READS: Event is true (pending). WRITES: Status bit is reset. . - (RW W1toClr)
2	LS_IRQ	R/W	0h	Context - Line start sync code detection status. 0: READS: Event is false. WRITES: Status bit unchanged. 1: READS: Event is true (pending). WRITES: Status bit is reset. - (RW W1toClr)
1	FE_IRQ	R/W	0h	Context - Frame end sync code detection status. 0: READS: Event is false. WRITES: Status bit unchanged. 1: READS: Event is true (pending). WRITES: Status bit is reset. - (RW W1toClr)
0	FS_IRQ	R/W	0h	Context - Frame start sync code detection status. 0: READS: Event is false. WRITES: Status bit unchanged. 1: READS: Event is true (pending). WRITES: Status bit is reset. - (RW W1toClr)

Copyright © 2025 Texas Instruments Incorporated

11.6.1.1.3.5.2.25 CSI2_CTX0_CTRL3 Register (Offset = 8Ch) [Reset = 00000000h]

CSI2_CTX0_CTRL3 is shown in Table 11-1459.

Return to the Summary Table.

CONTROL REGISTER - Context This register controls the Context. This register is shadowed: modifications are taken into account after the next FSC sync code.

Table 11-1459. CSI2_CTX0_CTRL3 Register Field Descriptions

Bit	Field	Type	Reset	Description
31-30	RESERVED	R	0h	Reserved
29-16	ALPHA	R/W	0h	When TRANSCODE=0 Alpha value for RGB888, RGB666 and RBG444. When TRANSCODE=1 and BYS=1 Image width, in pixels, acquired from the BYS port.
15-0	LINE_NUMBER	R/W	0h	Line number for the interrupt generation

Copyright © 2025 Texas Instruments Incorporated

11.6.1.1.3.5.2.26 CSI2_CTX1_CTRL1 Register (Offset = 90h) [Reset = 00010008h]

CSI2_CTX1_CTRL1 is shown in Table 11-1460.

Return to the Summary Table.

CONTROL REGISTER - Context This register controls the Context. This register is shadowed: modifications are taken into account after the next FSC sync code.

Table 11-1460. CSI2_CTX1_CTRL1 Register Field Descriptions

Bit	Field	Type	Reset	Description
31	BYTESWAP	R/W	0h	Allows swapping bytes two by two in the payload data. It doesn't affect - short packets - long packet header or footers - CRC calculation The purpose is to by swap data send to the OCP port and/or video port 0: Disabled 1: Enabled
30	GENERIC	R/W	0h	Enables the generic mode. 0: Disabled. Data is received according to CSI2_CTX_CTRL1.FORMAT and the long packet code transmitted in the MIPI stream is used. 1: Enabled. Data is received according to CSI2_CTX_CTRL1.FORMAT and the long packet code transmitted in the MIPI stream is ignored.
29	RES19	R	0h	RESERVE FIELD
28	HSCALE	R/W	0h	Enable horizontal downscaling by a factor of two. Applies to RAW data when transcoding is enabled. Must be disabled when transcoding is disabled. 0: Disable 1: Enable
27-24	TRANSCODE	R/W	0h	Enables image transcoding. When this features is enabled: - the data format from the camera is defined by the FORMAT register - the format after transcode is defined by the TRANSCODE register. The memory storage / video port formats is defined by the TRANSCODE register 0x 0: Feature disabled. 0x 1: Outputs DPCM compressed RAW10 data. After compression, pixels are coded on 8 bits. Data in memory is organized as regular RAW8 data 0x 2: Outputs DPCM compressed RAW12 data. After compression, pixels are coded on 8 bits. Data in memory is organized as regular RAW8 data 0x 3: Outputs ALAW compressed RAW10 data. After compression, pixels are coded on 8 bits. Data in memory is organized as regular RAW8 data. 0x 4: Outputs uncompressed RAW8 data. Data in memory is organized as regular RAW8 data 0x 5: Outputs uncompressed RAW10 data. Data in memory is organized as regular RAW10+EXP16 data 0x 6: Outputs uncompressed RAW10 data. Data in memory is organized as regular packed RAW10 data 0x 7: Outputs uncompressed RAW12 data. Data in memory is organized as regular RAW12+EXP16 data 0x 8: Outputs uncompressed RAW12 data. Data in memory is organized as regular packed RAW12 data 0x 9: Outputs uncompressed RAW14 data.
23-16	FEC_NUMBER	R/W	1h	Number of FEC to receive between using swap of CSI2_CTX_DAT_PING_ADDR and CSI2_CTX_DAT_PONG_ADDR for the calculation of the address in memory. (shall be used only in interlace mode, otherwise set to '1')

Copyright © 2025 Texas Instruments Incorporated

Table 11-1460. CSI2_CTX1_CTRL1 Register Field Descriptions (continued)

Bit	Field	Type	Reset	Description
15-8	COUNT	R/W	0h	Sets the number of frame to acquire. Once the frame acquisition starts, the COUNT value is decremented after every frame. When COUNT reaches 0, the FRAME_NUMBER_IRQ interrupt is triggered and CTX_EN is set to '0'. Writes to this bit field are controlled by the COUNT_UNLOCK bit. During the same OCP write access , the bit-field COUNT_UNLOCK shall be written in addition to COUNT bit-field in order to change the COUNT value. COUNT can be overwritten dynamically with a new count value." 0: Infinite number of frames (no count). 1: 1 frame to acquire ... 255: 255 frames to acquire.
7	EOF_EN	R/W	0h	Indicates if the end of frame signal shall be asserted at the end of the frame Read 0: The end of frame signal is not asserted at the end of each frame. Read 1: The end of frame signal is asserted at the end of each frame.
6	EOL_EN	R/W	0h	Indicates if the end of line signal shall be asserted at the end of the line. Read 0: The end of line signal is not asserted at the end of each frame. Read 1: The end of line signal is asserted at the end of each frame.
5	CS_EN	R/W	0h	Enables the checksum check for the received payload (long packet only). 0: Disabled 1: Enabled
4	COUNT_UNLOCK	W	0h	Unlock writes to the COUNT bit field. Write 0: COUNT bit field is locked. Writes have no effect Write 1: COUNT bit field is unlocked. Writes are possible.
3	PING_PONG	R	1h	Indicates whether the PING or PONG destination address (CSI2_CTX_DAT_PING_ADDR or CSI2_CTX_DAT_PONG_ADDR) was used to write the last frame. This bit field toggles after every FEC_NUMBER FEC sync code received for the current context. Read 0: PING buffer Read 1: PONG buffer
2	VP_FORCE	R/W	0h	RESERVE FIELD
1	LINE_MODULO	R/W	0h	Line modulo configuration 0: CSI2_CTX_CTRL3.LINE_NUMBER is used once per frame for the generation of the LINE_NUMBER_IRQ. 1: CSI2_CTX_CTRL3.LINE_NUMBER is used as a modulo number for the generation of the LINE_NUMBER_IRQ (multiple times the interrupt can be generated for each frame)
0	CTX_EN	R/W	0h	Enables the Context 0: Disabled 1: Enabled

Copyright © 2025 Texas Instruments Incorporated

11.6.1.1.3.5.2.27 CSI2_CTX1_CTRL2 Register (Offset = 94h) [Reset = 00000000h]

CSI2_CTX1_CTRL2 is shown in Table 11-1461.

Return to the Summary Table.

CONTROL REGISTER - Context This register controls the Context. This register is shadowed: modifications are taken into account after the next FSC sync code (except for VIRTUAL_ID and FORMAT fields). The change of VIRTUIAL_ID and FORMAT ha

Table 11-1461. CSI2_CTX1_CTRL2 Register Field Descriptions

Bit	Field	Type	Reset	Description
31-16	FRAME	R	0h	Frame number. The CSI-2 protocol engine extracts the frame number from the SOF short packet sent by the camera.
15	RES20	R	0h	RESERVE FIELD
14-13	USER_DEF_MAPPING	R/W	0h	Selects the pixel format of USER_DEFINED in FORMAT 0x 0: RAW6 0x 1: RAW7 0x 2: RAW8 (not valid if FORMAT is USER_DEFINED_8_BIT_DATA_TYPE_x_EXP8 with x from 1 to 8)
12-11	VIRTUAL_ID	R/W	0h	Virtual channel ID 0x 0: Virtual Channel ID 0 0x 1: Virtual Channel ID 1 0x 2: Virtual Channel ID 2 0x 3: Virtual Channel ID 3
10	DPCM_PRED	R/W	0h	Selects the DPCM predictor. 0: The advanced predictor is used. Not supported for 10 – 8 – 10 algorithm. Performance limited to 1 pixel/cycle. 1: The simple predictor is used.

Copyright © 2025 Texas Instruments Incorporated

Table 11-1461. CSI2_CTX1_CTRL2 Register Field Descriptions (continued)

Bit	Field	Type	Reset	Description
9-0	FORMAT	R/W	0h	Data format selection. 0x 000: OTHERS (except NULL and BLANKING packets) 0x 012: Embedded 8-bit non-image data (e.g. JPEG) 0x 018: YUV420 8bit 0x 019: YUV420 10bit 0x01A: YUV420 8bit legacy 0x01C: YUV420 8bit + CSPS 0x01D: YUV420 10bit + CSPS 0x01E: YUV422 8bit 0x01F: YUV422 10bit 0x 022: RGB565 0x 024: RGB888 0x 028: RAW6 0x 029: RAW7 0x02A: RAW8 0x02B: RAW10 0x02C: RAW12 0x02D: RAW14 0x 033: RGB666 + EXP32_24 0x 040: USER_DEFINED_8_BIT_DATA_TYPE_1 0x 041: USER_DEFINED_8_BIT_DATA_TYPE_2 0x 042: USER_DEFINED_8_BIT_DATA_TYPE_3 0x 043: USER_DEFINED_8_BIT_DATA_TYPE_4 0x 044: USER_DEFINED_8_BIT_DATA_TYPE_5 0x 045: USER_DEFINED_8_BIT_DATA_TYPE_6 0x 046: USER_DEFINED_8_BIT_DATA_TYPE_7 0x 047: USER_DEFINED_8_BIT_DATA_TYPE_8 0x 068: RAW6 + EXP8 0x 069: RAW7 + EXP8 0x 080: USER_DEFINED_8_BIT_DATA_TYPE_1 + EXP8 0x 081: USER_DEFINED_8_BIT_DATA_TYPE_2 + EXP8 0x 082: USER_DEFINED_8_BIT_DATA_TYPE_3 + EXP8 0x 083: USER_DEFINED_8_BIT_DATA_TYPE_4 + EXP8 0x 084: USER_DEFINED_8_BIT_DATA_TYPE_5 + EXP8 0x 085: USER_DEFINED_8_BIT_DATA_TYPE_6 + EXP8 0x 086: USER_DEFINED_8_BIT_DATA_TYPE_7 + EXP8 0x 087: USER_DEFINED_8_BIT_DATA_TYPE_8 + EXP8 0x09E: YUV422 8bit + VP 0x0A 0: RGB444 + EXP16 0x0A 1: RGB555 + EXP16 0x0AB: RAW10 + EXP16 0x0AC: RAW12 + EXP16 0x0AD: RAW14 + EXP16 0x0DE: Same as YUV422 8bit + VP but data is send as 16-bit wide words to video port. Could be used together with the GENERIC and BYTESWAP features 0x0E 3: RGB666 + EXP32 0x0E 4: RGB888 + EXP32 0x0E 8: RAW6 + DPCM10 + VP 0x12A: RAW8 + VP 0x12C: RAW12 + VP 0x12D: RAW14 + VP 0x12F: RAW10 + VP 0x 140: USER_DEFINED_8_BIT_DATA_TYPE_1_DPCM12_VP 0x 141: USER_DEFINED_8_BIT_DATA_TYPE_2_DPCM12_VP 0x 142: USER_DEFINED_8_BIT_DATA_TYPE_3_DPCM12_VP 0x 143: USER_DEFINED_8_BIT_DATA_TYPE_4_DPCM12_VP 0x 144: USER_DEFINED_8_BIT_DATA_TYPE_5_DPCM12_VP 0x 145: USER_DEFINED_8_BIT_DATA_TYPE_6_DPCM12_VP 0x 146: USER_DEFINED_8_BIT_DATA_TYPE_7_DPCM12_VP 0x 147: USER_DEFINED_8_BIT_DATA_TYPE_8_DPCM12_VP 0x1C 0: USER_DEFINED_8_BIT_DATA_TYPE_1_DPCM12_EXP16 0x1C 1: USER_DEFINED_8_BIT_DATA_TYPE_2_DPCM12_EXP16 0x1C 2: USER_DEFINED_8_BIT_DATA_TYPE_3_DPCM12_EXP16 0x1C 3: USER_DEFINED_8_BIT_DATA_TYPE_4_DPCM12_EXP16 0x1C 4: USER_DEFINED_8_BIT_DATA_TYPE_5_DPCM12_EXP16 0x1C 5: USER_DEFINED_8_BIT_DATA_TYPE_6_DPCM12_EXP16 0x1C 6: USER_DEFINED_8_BIT_DATA_TYPE_7_DPCM12_EXP16 0x1C 7: USER_DEFINED_8_BIT_DATA_TYPE_8_DPCM12_EXP16 0x 229: RAW7 + DPCM10 + EXP16 0x2A 8: RAW6 + DPCM10 + EXP16 0x2AA: RAW8 + DPCM10 + EXP16 0x2C

Copyright © 2025 Texas Instruments Incorporated

Table 11-1461. CSI2_CTX1_CTRL2 Register Field Descriptions (continued)

Bit	Field	Type	Reset	Description
				0: USER_DEFINED_8_BIT_DATA_TYPE_1 + DPCM10 + EXP16 0x2C 1: USER_DEFINED_8_BIT_DATA_TYPE_2 + DPCM10 + EXP16 0x2C 2: USER_DEFINED_8_BIT_DATA_TYPE_3 + DPCM10 + EXP16 0x2C 3: USER_DEFINED_8_BIT_DATA_TYPE_4 + DPCM10 + EXP16 0x2C 4: USER_DEFINED_8_BIT_DATA_TYPE_5 + DPCM10 + EXP16 0x2C 5: USER_DEFINED_8_BIT_DATA_TYPE_6 + DPCM10 + EXP16 0x2C 6: USER_DEFINED_8_BIT_DATA_TYPE_7 + DPCM10 + EXP16 0x2C 7: USER_DEFINED_8_BIT_DATA_TYPE_8 + DPCM10 + EXP16 0x 329: RAW7 + DPCM10 + VP 0x32A: RAW8 + DPCM10 + VP 0x 340: USER_DEFINED_8_BIT_DATA_TYPE_1 + DPCM10 + VP 0x 341: USER_DEFINED_8_BIT_DATA_TYPE_2 + DPCM10 + VP 0x 342: USER_DEFINED_8_BIT_DATA_TYPE_3 + DPCM10 + VP 0x 343: USER_DEFINED_8_BIT_DATA_TYPE_4 + DPCM10 + VP 0x 344: USER_DEFINED_8_BIT_DATA_TYPE_5 + DPCM10 + VP 0x 345: USER_DEFINED_8_BIT_DATA_TYPE_6 + DPCM10 + VP 0x 346: USER_DEFINED_8_BIT_DATA_TYPE_7 + DPCM10 + VP 0x 347: USER_DEFINED_8_BIT_DATA_TYPE_8 + DPCM10 + VP 0x 368: RAW6 DPCM12 + VP 0x 369: RAW7 DPCM12 + EXP16 0x36A: RAW8 DPCM12 + EXP16 0x3A 8: RAW6 DPCM12 + EXP16 0x3A 9: RAW7 DPCM12 + VP 0x3AA: RAW8 DPCM12 + VP

Copyright © 2025 Texas Instruments Incorporated

11.6.1.1.3.5.2.28 CSI2_CTX1_DAT_OFST Register (Offset = 98h) [Reset = 00000000h]

CSI2_CTX1_DAT_OFST is shown in Table 11-1462.

Return to the Summary Table.

DATA MEM ADDRESS OFFSET REGISTER - Context This register sets the offset which is applied on the destination address after each line is written to memory. This register applies for both CSI2_CTX_DAT_PING_ADDR and CSI2_CTX_DAT_PONG_ADDR.

Table 11-1462. CSI2_CTX1_DAT_OFST Register Field Descriptions

Bit	Field	Type	Reset	Description
31-17	RES21	R	0h	RESERVE FIELD
16-5	OFST	R/W	0h	Line offset programmed in bytes (signed value 2's complement). If OFST = 0, the data is written contiguously in memory. Otherwise, OFST sets the destination offset between the first pixel of the previous line and the first pixel of the current line. Valid range: -2^{17} ~ (2^{17}-1)
4-0	RESERVED	R	0h	

Copyright © 2025 Texas Instruments Incorporated

11.6.1.1.3.5.2.29 CSI2_CTX1_DAT_PING_ADDR Register (Offset = 9Ch) [Reset = 00000000h]

CSI2_CTX1_DAT_PING_ADDR is shown in Table 11-1463.

Return to the Summary Table.

DATA MEM PING ADDRESS REGISTER - Context This register sets the 32-bit memory address where the pixel data are stored. The destination is double buffered: this register sets the PING address. Double buffering is enabled when the addresses

Table 11-1463. CSI2_CTX1_DAT_PING_ADDR Register Field Descriptions

Bit	Field	Type	Reset	Description
31-5	ADDR	R/W	0h	27 most significant bits of the 32-bit address.
4-0	RES	R	0h	RESERVE FIELD

Copyright © 2025 Texas Instruments Incorporated

11.6.1.1.3.5.2.30 CSI2_CTX1_DAT_PONG_ADDR Register (Offset = A0h) [Reset = 00000000h]

CSI2_CTX1_DAT_PONG_ADDR is shown in Table 11-1464.

Return to the Summary Table.

DATA MEM PONG ADDRESS REGISTER - Context This register sets the 32-bit memory address where the pixel data are stored. The destination is double buffered: this register sets the PONG address. Double buffering is enabled when the addresses

Table 11-1464. CSI2_CTX1_DAT_PONG_ADDR Register Field Descriptions

Bit	Field	Type	Reset	Description
31-5	ADDR	R/W	0h	27 most significant bits of the 32-bit address.
4-0	RES	R	0h	RESERVE FIELD

Copyright © 2025 Texas Instruments Incorporated

11.6.1.1.3.5.2.31 CSI2_CTX1_IRQENABLE Register (Offset = A4h) [Reset = 00000000h]

CSI2_CTX1_IRQENABLE is shown in Table 11-1465.

Return to the Summary Table.

INTERRUPT ENABLE REGISTER - Context This register regroups all the events related to Context.

Table 11-1465. CSI2_CTX1_IRQENABLE Register Field Descriptions

Bit	Field	Type	Reset	Description
31-9	RES22	R	0h	RESERVE FIELD
8	ECC_CORRECTION_IRQ	R/W	0h	Context - ECC has been used to correct the only 1-bit error (long packet only). 0: Event is masked 1: Event generates an interrupt when it occurs
7	LINE_NUMBER_IRQ	R/W	0h	Context - Line number is reached. 0: Event is masked 1: Event generates an interrupt when it occurs
6	FRAME_NUMBER_IRQ	R/W	0h	Context - Frame counter reached. 0: Event is masked 1: Event generates an interrupt when it occurs
5	CS_IRQ	R/W	0h	Context - Check-Sum of the payload mismatch detection 0: Event is masked 1: Event generates an interrupt when it occurs
4	RES23	R	0h	RESERVE FIELD
3	LE_IRQ	R/W	0h	Context - Line end sync code detection. 0: Event is masked 1: Event generates an interrupt when it occurs
2	LS_IRQ	R/W	0h	Context - Line start sync code detection. 0: Event is masked 1: Event generates an interrupt when it occurs
1	FE_IRQ	R/W	0h	Context - Frame end sync code detection. 0: Event is masked 1: Event generates an interrupt when it occurs
0	FS_IRQ	R/W	0h	Context - Frame start sync code detection. 0: Event is masked 1: Event generates an interrupt when it occurs

Copyright © 2025 Texas Instruments Incorporated

11.6.1.1.3.5.2.32 CSI2_CTX1_IRQSTATUS Register (Offset = A8h) [Reset = 00000000h]

CSI2_CTX1_IRQSTATUS is shown in Table 11-1466.

Return to the Summary Table.

INTERRUPT STATUS REGISTER - Context This register regroups all the events related to Context.

Table 11-1466. CSI2_CTX1_IRQSTATUS Register Field Descriptions

Bit	Field	Type	Reset	Description
31-9	RES24	R	0h	RESERVE FIELD
8	ECC_CORRECTION_IRQ	R/W	0h	Context - ECC has been used to do the correction of the only 1-bit error status (long packet only). 0: READS: Event is false. WRITES: Status bit unchanged. 1: READS: Event is true (pending). WRITES: Status bit is reset. . - (RW W1toClr)
7	LINE_NUMBER_IRQ	R/W	0h	Contexc - Line number reached status. 0: READS: Event is false. WRITES: Status bit unchanged. 1: READS: Event is true (pending). WRITES: Status bit is reset. - (RW W1toClr)
6	FRAME_NUMBER_IRQ	R/W	0h	Context - Frame counter reached status 0: READS: Event is false. WRITES: Status bit unchanged. 1: READS: Event is true (pending). WRITES: Status bit is reset. - (RW W1toClr)
5	CS_IRQ	R/W	0h	Context - Check-Sum mismatch status. 0: READS: Event is false. WRITES: Status bit unchanged. 1: READS: Event is true (pending). WRITES: Status bit is reset. - (RW W1toClr)
4	RES25	R	0h	RESERVE FIELD
3	LE_IRQ	R/W	0h	Context - Line end sync code detection status. 0: READS: Event is false. WRITES: Status bit unchanged. 1: READS: Event is true (pending). WRITES: Status bit is reset. . - (RW W1toClr)
2	LS_IRQ	R/W	0h	Context - Line start sync code detection status. 0: READS: Event is false. WRITES: Status bit unchanged. 1: READS: Event is true (pending). WRITES: Status bit is reset. - (RW W1toClr)
1	FE_IRQ	R/W	0h	Context - Frame end sync code detection status. 0: READS: Event is false. WRITES: Status bit unchanged. 1: READS: Event is true (pending). WRITES: Status bit is reset. - (RW W1toClr)
0	FS_IRQ	R/W	0h	Context - Frame start sync code detection status. 0: READS: Event is false. WRITES: Status bit unchanged. 1: READS: Event is true (pending). WRITES: Status bit is reset. - (RW W1toClr)

Copyright © 2025 Texas Instruments Incorporated

11.6.1.1.3.5.2.33 CSI2_CTX1_CTRL3 Register (Offset = ACh) [Reset = 00000000h]

CSI2_CTX1_CTRL3 is shown in Table 11-1467.

Return to the Summary Table.

CONTROL REGISTER - Context This register controls the Context. This register is shadowed: modifications are taken into account after the next FSC sync code.

Table 11-1467. CSI2_CTX1_CTRL3 Register Field Descriptions

Bit	Field	Type	Reset	Description
31-30	RESERVED	R	0h	Reserved
29-16	ALPHA	R/W	0h	When TRANSCODE=0 Alpha value for RGB888, RGB666 and RBG444. When TRANSCODE=1 and BYS=1 Image width, in pixels, acquired from the BYS port.
15-0	LINE_NUMBER	R/W	0h	Line number for the interrupt generation

Copyright © 2025 Texas Instruments Incorporated

11.6.1.1.3.5.2.34 CSI2_CTX2_CTRL1 Register (Offset = B0h) [Reset = 00010008h]

CSI2_CTX2_CTRL1 is shown in Table 11-1468.

Return to the Summary Table.

CONTROL REGISTER - Context This register controls the Context. This register is shadowed: modifications are taken into account after the next FSC sync code.

Table 11-1468. CSI2_CTX2_CTRL1 Register Field Descriptions

Bit	Field	Type	Reset	Description
31	BYTESWAP	R/W	0h	Allows swapping bytes two by two in the payload data. It doesn't affect - short packets - long packet header or footers - CRC calculation The purpose is to by swap data send to the OCP port and/or video port 0: Disabled 1: Enabled
30	GENERIC	R/W	0h	Enables the generic mode. 0: Disabled. Data is received according to CSI2_CTX_CTRL1.FORMAT and the long packet code transmitted in the MIPI stream is used. 1: Enabled. Data is received according to CSI2_CTX_CTRL1.FORMAT and the long packet code transmitted in the MIPI stream is ignored.
29	RES19	R	0h	RESERVE FIELD
28	HSCALE	R/W	0h	Enable horizontal downscaling by a factor of two. Applies to RAW data when transcoding is enabled. Must be disabled when transcoding is disabled. 0: Disable 1: Enable
27-24	TRANSCODE	R/W	0h	Enables image transcoding. When this features is enabled: - the data format from the camera is defined by the FORMAT register - the format after transcode is defined by the TRANSCODE register. The memory storage / video port formats is defined by the TRANSCODE register 0x 0: Feature disabled. 0x 1: Outputs DPCM compressed RAW10 data. After compression, pixels are coded on 8 bits. Data in memory is organized as regular RAW8 data 0x 2: Outputs DPCM compressed RAW12 data. After compression, pixels are coded on 8 bits. Data in memory is organized as regular RAW8 data 0x 3: Outputs ALAW compressed RAW10 data. After compression, pixels are coded on 8 bits. Data in memory is organized as regular RAW8 data. 0x 4: Outputs uncompressed RAW8 data. Data in memory is organized as regular RAW8 data 0x 5: Outputs uncompressed RAW10 data. Data in memory is organized as regular RAW10+EXP16 data 0x 6: Outputs uncompressed RAW10 data. Data in memory is organized as regular packed RAW10 data 0x 7: Outputs uncompressed RAW12 data. Data in memory is organized as regular RAW12+EXP16 data 0x 8: Outputs uncompressed RAW12 data. Data in memory is organized as regular packed RAW12 data 0x 9: Outputs uncompressed RAW14 data.
23-16	FEC_NUMBER	R/W	1h	Number of FEC to receive between using swap of CSI2_CTX_DAT_PING_ADDR and CSI2_CTX_DAT_PONG_ADDR for the calculation of the address in memory. (shall be used only in interlace mode, otherwise set to '1')

Copyright © 2025 Texas Instruments Incorporated

Table 11-1468. CSI2_CTX2_CTRL1 Register Field Descriptions (continued)

Bit	Field	Type	Reset	Description
15-8	COUNT	R/W	0h	Sets the number of frame to acquire. Once the frame acquisition starts, the COUNT value is decremented after every frame. When COUNT reaches 0, the FRAME_NUMBER_IRQ interrupt is triggered and CTX_EN is set to '0'. Writes to this bit field are controlled by the COUNT_UNLOCK bit. During the same OCP write access , the bit-field COUNT_UNLOCK shall be written in addition to COUNT bit-field in order to change the COUNT value. COUNT can be overwritten dynamically with a new count value." 0: Infinite number of frames (no count). 1: 1 frame to acquire ... 255: 255 frames to acquire.
7	EOF_EN	R/W	0h	Indicates if the end of frame signal shall be asserted at the end of the frame Read 0: The end of frame signal is not asserted at the end of each frame. Read 1: The end of frame signal is asserted at the end of each frame.
6	EOL_EN	R/W	0h	Indicates if the end of line signal shall be asserted at the end of the line. Read 0: The end of line signal is not asserted at the end of each frame. Read 1: The end of line signal is asserted at the end of each frame.
5	CS_EN	R/W	0h	Enables the checksum check for the received payload (long packet only). 0: Disabled 1: Enabled
4	COUNT_UNLOCK	W	0h	Unlock writes to the COUNT bit field. Write 0: COUNT bit field is locked. Writes have no effect Write 1: COUNT bit field is unlocked. Writes are possible.
3	PING_PONG	R	1h	Indicates whether the PING or PONG destination address (CSI2_CTX_DAT_PING_ADDR or CSI2_CTX_DAT_PONG_ADDR) was used to write the last frame. This bit field toggles after every FEC_NUMBER FEC sync code received for the current context. Read 0: PING buffer Read 1: PONG buffer
2	VP_FORCE	R/W	0h	RESERVE FIELD
1	LINE_MODULO	R/W	0h	Line modulo configuration 0: CSI2_CTX_CTRL3.LINE_NUMBER is used once per frame for the generation of the LINE_NUMBER_IRQ. 1: CSI2_CTX_CTRL3.LINE_NUMBER is used as a modulo number for the generation of the LINE_NUMBER_IRQ (multiple times the interrupt can be generated for each frame)
0	CTX_EN	R/W	0h	Enables the Context 0: Disabled 1: Enabled

Copyright © 2025 Texas Instruments Incorporated

11.6.1.1.3.5.2.35 CSI2_CTX2_CTRL2 Register (Offset = B4h) [Reset = 00000000h]

CSI2_CTX2_CTRL2 is shown in Table 11-1469.

Return to the Summary Table.

CONTROL REGISTER - Context This register controls the Context. This register is shadowed: modifications are taken into account after the next FSC sync code (except for VIRTUAL_ID and FORMAT fields). The change of VIRTUIAL_ID and FORMAT ha

Table 11-1469. CSI2_CTX2_CTRL2 Register Field Descriptions

Bit	Field	Type	Reset	Description
31-16	FRAME	R	0h	Frame number. The CSI-2 protocol engine extracts the frame number from the SOF short packet sent by the camera.
15	RES20	R	0h	RESERVE FIELD
14-13	USER_DEF_MAPPING	R/W	0h	Selects the pixel format of USER_DEFINED in FORMAT 0x 0: RAW6 0x 1: RAW7 0x 2: RAW8 (not valid if FORMAT is USER_DEFINED_8_BIT_DATA_TYPE_x_EXP8 with x from 1 to 8)
12-11	VIRTUAL_ID	R/W	0h	Virtual channel ID 0x 0: Virtual Channel ID 0 0x 1: Virtual Channel ID 1 0x 2: Virtual Channel ID 2 0x 3: Virtual Channel ID 3
10	DPCM_PRED	R/W	0h	Selects the DPCM predictor. 0: The advanced predictor is used. Not supported for 10 – 8 – 10 algorithm. Performance limited to 1 pixel/cycle. 1: The simple predictor is used.

Copyright © 2025 Texas Instruments Incorporated

Table 11-1469. CSI2_CTX2_CTRL2 Register Field Descriptions (continued)

Bit	Field	Type	Reset	Description
9-0	FORMAT	R/W	0h	Data format selection. 0x 000: OTHERS (except NULL and BLANKING packets) 0x 012: Embedded 8-bit non-image data (e.g. JPEG) 0x 018: YUV420 8bit 0x 019: YUV420 10bit 0x01A: YUV420 8bit legacy 0x01C: YUV420 8bit + CSPS 0x01D: YUV420 10bit + CSPS 0x01E: YUV422 8bit 0x01F: YUV422 10bit 0x 022: RGB565 0x 024: RGB888 0x 028: RAW6 0x 029: RAW7 0x02A: RAW8 0x02B: RAW10 0x02C: RAW12 0x02D: RAW14 0x 033: RGB666 + EXP32_24 0x 040: USER_DEFINED_8_BIT_DATA_TYPE_1 0x 041: USER_DEFINED_8_BIT_DATA_TYPE_2 0x 042: USER_DEFINED_8_BIT_DATA_TYPE_3 0x 043: USER_DEFINED_8_BIT_DATA_TYPE_4 0x 044: USER_DEFINED_8_BIT_DATA_TYPE_5 0x 045: USER_DEFINED_8_BIT_DATA_TYPE_6 0x 046: USER_DEFINED_8_BIT_DATA_TYPE_7 0x 047: USER_DEFINED_8_BIT_DATA_TYPE_8 0x 068: RAW6 + EXP8 0x 069: RAW7 + EXP8 0x 080: USER_DEFINED_8_BIT_DATA_TYPE_1 + EXP8 0x 081: USER_DEFINED_8_BIT_DATA_TYPE_2 + EXP8 0x 082: USER_DEFINED_8_BIT_DATA_TYPE_3 + EXP8 0x 083: USER_DEFINED_8_BIT_DATA_TYPE_4 + EXP8 0x 084: USER_DEFINED_8_BIT_DATA_TYPE_5 + EXP8 0x 085: USER_DEFINED_8_BIT_DATA_TYPE_6 + EXP8 0x 086: USER_DEFINED_8_BIT_DATA_TYPE_7 + EXP8 0x 087: USER_DEFINED_8_BIT_DATA_TYPE_8 + EXP8 0x09E: YUV422 8bit + VP 0x0A 0: RGB444 + EXP16 0x0A 1: RGB555 + EXP16 0x0AB: RAW10 + EXP16 0x0AC: RAW12 + EXP16 0x0AD: RAW14 + EXP16 0x0DE: Same as YUV422 8bit + VP but data is send as 16-bit wide words to video port. Could be used together with the GENERIC and BYTESWAP features 0x0E 3: RGB666 + EXP32 0x0E 4: RGB888 + EXP32 0x0E 8: RAW6 + DPCM10 + VP 0x12A: RAW8 + VP 0x12C: RAW12 + VP 0x12D: RAW14 + VP 0x12F: RAW10 + VP 0x 140: USER_DEFINED_8_BIT_DATA_TYPE_1_DPCM12_VP 0x 141: USER_DEFINED_8_BIT_DATA_TYPE_2_DPCM12_VP 0x 142: USER_DEFINED_8_BIT_DATA_TYPE_3_DPCM12_VP 0x 143: USER_DEFINED_8_BIT_DATA_TYPE_4_DPCM12_VP 0x 144: USER_DEFINED_8_BIT_DATA_TYPE_5_DPCM12_VP 0x 145: USER_DEFINED_8_BIT_DATA_TYPE_6_DPCM12_VP 0x 146: USER_DEFINED_8_BIT_DATA_TYPE_7_DPCM12_VP 0x 147: USER_DEFINED_8_BIT_DATA_TYPE_8_DPCM12_VP 0x1C 0: USER_DEFINED_8_BIT_DATA_TYPE_1_DPCM12_EXP16 0x1C 1: USER_DEFINED_8_BIT_DATA_TYPE_2_DPCM12_EXP16 0x1C 2: USER_DEFINED_8_BIT_DATA_TYPE_3_DPCM12_EXP16 0x1C 3: USER_DEFINED_8_BIT_DATA_TYPE_4_DPCM12_EXP16 0x1C 4: USER_DEFINED_8_BIT_DATA_TYPE_5_DPCM12_EXP16 0x1C 5: USER_DEFINED_8_BIT_DATA_TYPE_6_DPCM12_EXP16 0x1C 6: USER_DEFINED_8_BIT_DATA_TYPE_7_DPCM12_EXP16 0x1C 7: USER_DEFINED_8_BIT_DATA_TYPE_8_DPCM12_EXP16 0x 229: RAW7 + DPCM10 + EXP16 0x2A 8: RAW6 + DPCM10 + EXP16 0x2AA: RAW8 + DPCM10 + EXP16 0x2C

Copyright © 2025 Texas Instruments Incorporated

Table 11-1469. CSI2_CTX2_CTRL2 Register Field Descriptions (continued)

Bit	Field	Type	Reset	Description
				0: USER_DEFINED_8_BIT_DATA_TYPE_1 + DPCM10 + EXP16 0x2C 1: USER_DEFINED_8_BIT_DATA_TYPE_2 + DPCM10 + EXP16 0x2C 2: USER_DEFINED_8_BIT_DATA_TYPE_3 + DPCM10 + EXP16 0x2C 3: USER_DEFINED_8_BIT_DATA_TYPE_4 + DPCM10 + EXP16 0x2C 4: USER_DEFINED_8_BIT_DATA_TYPE_5 + DPCM10 + EXP16 0x2C 5: USER_DEFINED_8_BIT_DATA_TYPE_6 + DPCM10 + EXP16 0x2C 6: USER_DEFINED_8_BIT_DATA_TYPE_7 + DPCM10 + EXP16 0x2C 7: USER_DEFINED_8_BIT_DATA_TYPE_8 + DPCM10 + EXP16 0x 329: RAW7 + DPCM10 + VP 0x32A: RAW8 + DPCM10 + VP 0x 340: USER_DEFINED_8_BIT_DATA_TYPE_1 + DPCM10 + VP 0x 341: USER_DEFINED_8_BIT_DATA_TYPE_2 + DPCM10 + VP 0x 342: USER_DEFINED_8_BIT_DATA_TYPE_3 + DPCM10 + VP 0x 343: USER_DEFINED_8_BIT_DATA_TYPE_4 + DPCM10 + VP 0x 344: USER_DEFINED_8_BIT_DATA_TYPE_5 + DPCM10 + VP 0x 345: USER_DEFINED_8_BIT_DATA_TYPE_6 + DPCM10 + VP 0x 346: USER_DEFINED_8_BIT_DATA_TYPE_7 + DPCM10 + VP 0x 347: USER_DEFINED_8_BIT_DATA_TYPE_8 + DPCM10 + VP 0x 368: RAW6 DPCM12 + VP 0x 369: RAW7 DPCM12 + EXP16 0x36A: RAW8 DPCM12 + EXP16 0x3A 8: RAW6 DPCM12 + EXP16 0x3A 9: RAW7 DPCM12 + VP 0x3AA: RAW8 DPCM12 + VP

Copyright © 2025 Texas Instruments Incorporated

11.6.1.1.3.5.2.36 CSI2_CTX2_DAT_OFST Register (Offset = B8h) [Reset = 00000000h]

CSI2_CTX2_DAT_OFST is shown in Table 11-1470.

Return to the Summary Table.

DATA MEM ADDRESS OFFSET REGISTER - Context This register sets the offset which is applied on the destination address after each line is written to memory. This register applies for both CSI2_CTX_DAT_PING_ADDR and CSI2_CTX_DAT_PONG_ADDR.

Table 11-1470. CSI2_CTX2_DAT_OFST Register Field Descriptions

Bit	Field	Type	Reset	Description
31-17	RES21	R	0h	RESERVE FIELD
16-5	OFST	R/W	0h	Line offset programmed in bytes (signed value 2's complement). If OFST = 0, the data is written contiguously in memory. Otherwise, OFST sets the destination offset between the first pixel of the previous line and the first pixel of the current line. Valid range: -2^{17} ~ (2^{17}-1)
4-0	RESERVED	R	0h	

Copyright © 2025 Texas Instruments Incorporated

11.6.1.1.3.5.2.37 CSI2_CTX2_DAT_PING_ADDR Register (Offset = BCh) [Reset = 00000000h]

CSI2_CTX2_DAT_PING_ADDR is shown in Table 11-1471.

Return to the Summary Table.

DATA MEM PING ADDRESS REGISTER - Context This register sets the 32-bit memory address where the pixel data are stored. The destination is double buffered: this register sets the PING address. Double buffering is enabled when the addresses

Table 11-1471. CSI2_CTX2_DAT_PING_ADDR Register Field Descriptions

Bit	Field	Type	Reset	Description
31-5	ADDR	R/W	0h	27 most significant bits of the 32-bit address.
4-0	RES	R	0h	RESERVE FIELD

Copyright © 2025 Texas Instruments Incorporated

11.6.1.1.3.5.2.38 CSI2_CTX2_DAT_PONG_ADDR Register (Offset = C0h) [Reset = 00000000h]

CSI2_CTX2_DAT_PONG_ADDR is shown in Table 11-1472.

Return to the Summary Table.

DATA MEM PONG ADDRESS REGISTER - Context This register sets the 32-bit memory address where the pixel data are stored. The destination is double buffered: this register sets the PONG address. Double buffering is enabled when the addresses

Table 11-1472. CSI2_CTX2_DAT_PONG_ADDR Register Field Descriptions

Bit	Field	Type	Reset	Description
31-5	ADDR	R/W	0h	27 most significant bits of the 32-bit address.
4-0	RES	R	0h	RESERVE FIELD

Copyright © 2025 Texas Instruments Incorporated

11.6.1.1.3.5.2.39 CSI2_CTX2_IRQENABLE Register (Offset = C4h) [Reset = 00000000h]

CSI2_CTX2_IRQENABLE is shown in Table 11-1473.

Return to the Summary Table.

INTERRUPT ENABLE REGISTER - Context This register regroups all the events related to Context.

Table 11-1473. CSI2_CTX2_IRQENABLE Register Field Descriptions

Bit	Field	Type	Reset	Description
31-9	RES22	R	0h	RESERVE FIELD
8	ECC_CORRECTION_IRQ	R/W	0h	Context - ECC has been used to correct the only 1-bit error (long packet only). 0: Event is masked 1: Event generates an interrupt when it occurs
7	LINE_NUMBER_IRQ	R/W	0h	Context - Line number is reached. 0: Event is masked 1: Event generates an interrupt when it occurs
6	FRAME_NUMBER_IRQ	R/W	0h	Context - Frame counter reached. 0: Event is masked 1: Event generates an interrupt when it occurs
5	CS_IRQ	R/W	0h	Context - Check-Sum of the payload mismatch detection 0: Event is masked 1: Event generates an interrupt when it occurs
4	RES23	R	0h	RESERVE FIELD
3	LE_IRQ	R/W	0h	Context - Line end sync code detection. 0: Event is masked 1: Event generates an interrupt when it occurs
2	LS_IRQ	R/W	0h	Context - Line start sync code detection. 0: Event is masked 1: Event generates an interrupt when it occurs
1	FE_IRQ	R/W	0h	Context - Frame end sync code detection. 0: Event is masked 1: Event generates an interrupt when it occurs
0	FS_IRQ	R/W	0h	Context - Frame start sync code detection. 0: Event is masked 1: Event generates an interrupt when it occurs

Copyright © 2025 Texas Instruments Incorporated

11.6.1.1.3.5.2.40 CSI2_CTX2_IRQSTATUS Register (Offset = C8h) [Reset = 00000000h]

CSI2_CTX2_IRQSTATUS is shown in Table 11-1474.

Return to the Summary Table.

INTERRUPT STATUS REGISTER - Context This register regroups all the events related to Context.

Table 11-1474. CSI2_CTX2_IRQSTATUS Register Field Descriptions

Bit	Field	Type	Reset	Description
31-9	RES24	R	0h	RESERVE FIELD
8	ECC_CORRECTION_IRQ	R/W	0h	Context - ECC has been used to do the correction of the only 1-bit error status (long packet only). 0: READS: Event is false. WRITES: Status bit unchanged. 1: READS: Event is true (pending). WRITES: Status bit is reset. . - (RW W1toClr)
7	LINE_NUMBER_IRQ	R/W	0h	Contexc - Line number reached status. 0: READS: Event is false. WRITES: Status bit unchanged. 1: READS: Event is true (pending). WRITES: Status bit is reset. - (RW W1toClr)
6	FRAME_NUMBER_IRQ	R/W	0h	Context - Frame counter reached status 0: READS: Event is false. WRITES: Status bit unchanged. 1: READS: Event is true (pending). WRITES: Status bit is reset. - (RW W1toClr)
5	CS_IRQ	R/W	0h	Context - Check-Sum mismatch status. 0: READS: Event is false. WRITES: Status bit unchanged. 1: READS: Event is true (pending). WRITES: Status bit is reset. - (RW W1toClr)
4	RES25	R	0h	RESERVE FIELD
3	LE_IRQ	R/W	0h	Context - Line end sync code detection status. 0: READS: Event is false. WRITES: Status bit unchanged. 1: READS: Event is true (pending). WRITES: Status bit is reset. . - (RW W1toClr)
2	LS_IRQ	R/W	0h	Context - Line start sync code detection status. 0: READS: Event is false. WRITES: Status bit unchanged. 1: READS: Event is true (pending). WRITES: Status bit is reset. - (RW W1toClr)
1	FE_IRQ	R/W	0h	Context - Frame end sync code detection status. 0: READS: Event is false. WRITES: Status bit unchanged. 1: READS: Event is true (pending). WRITES: Status bit is reset. - (RW W1toClr)
0	FS_IRQ	R/W	0h	Context - Frame start sync code detection status. 0: READS: Event is false. WRITES: Status bit unchanged. 1: READS: Event is true (pending). WRITES: Status bit is reset. - (RW W1toClr)

Copyright © 2025 Texas Instruments Incorporated

11.6.1.1.3.5.2.41 CSI2_CTX2_CTRL3 Register (Offset = CCh) [Reset = 00000000h]

CSI2_CTX2_CTRL3 is shown in Table 11-1475.

Return to the Summary Table.

CONTROL REGISTER - Context This register controls the Context. This register is shadowed: modifications are taken into account after the next FSC sync code.

Table 11-1475. CSI2_CTX2_CTRL3 Register Field Descriptions

Bit	Field	Type	Reset	Description
31-30	RESERVED	R	0h	Reserved
29-16	ALPHA	R/W	0h	When TRANSCODE=0 Alpha value for RGB888, RGB666 and RBG444. When TRANSCODE=1 and BYS=1 Image width, in pixels, acquired from the BYS port.
15-0	LINE_NUMBER	R/W	0h	Line number for the interrupt generation

Copyright © 2025 Texas Instruments Incorporated

11.6.1.1.3.5.2.42 CSI2_CTX3_CTRL1 Register (Offset = D0h) [Reset = 00010008h]

CSI2_CTX3_CTRL1 is shown in Table 11-1476.

Return to the Summary Table.

CONTROL REGISTER - Context This register controls the Context. This register is shadowed: modifications are taken into account after the next FSC sync code.

Table 11-1476. CSI2_CTX3_CTRL1 Register Field Descriptions

Bit	Field	Type	Reset	Description
31	BYTESWAP	R/W	0h	Allows swapping bytes two by two in the payload data. It doesn't affect - short packets - long packet header or footers - CRC calculation The purpose is to by swap data send to the OCP port and/or video port 0: Disabled 1: Enabled
30	GENERIC	R/W	0h	Enables the generic mode. 0: Disabled. Data is received according to CSI2_CTX_CTRL1.FORMAT and the long packet code transmitted in the MIPI stream is used. 1: Enabled. Data is received according to CSI2_CTX_CTRL1.FORMAT and the long packet code transmitted in the MIPI stream is ignored.
29	RES19	R	0h	RESERVE FIELD
28	HSCALE	R/W	0h	Enable horizontal downscaling by a factor of two. Applies to RAW data when transcoding is enabled. Must be disabled when transcoding is disabled. 0: Disable 1: Enable
27-24	TRANSCODE	R/W	0h	Enables image transcoding. When this features is enabled: - the data format from the camera is defined by the FORMAT register - the format after transcode is defined by the TRANSCODE register. The memory storage / video port formats is defined by the TRANSCODE register 0x 0: Feature disabled. 0x 1: Outputs DPCM compressed RAW10 data. After compression, pixels are coded on 8 bits. Data in memory is organized as regular RAW8 data 0x 2: Outputs DPCM compressed RAW12 data. After compression, pixels are coded on 8 bits. Data in memory is organized as regular RAW8 data 0x 3: Outputs ALAW compressed RAW10 data. After compression, pixels are coded on 8 bits. Data in memory is organized as regular RAW8 data. 0x 4: Outputs uncompressed RAW8 data. Data in memory is organized as regular RAW8 data 0x 5: Outputs uncompressed RAW10 data. Data in memory is organized as regular RAW10+EXP16 data 0x 6: Outputs uncompressed RAW10 data. Data in memory is organized as regular packed RAW10 data 0x 7: Outputs uncompressed RAW12 data. Data in memory is organized as regular RAW12+EXP16 data 0x 8: Outputs uncompressed RAW12 data. Data in memory is organized as regular packed RAW12 data 0x 9: Outputs uncompressed RAW14 data.
23-16	FEC_NUMBER	R/W	1h	Number of FEC to receive between using swap of CSI2_CTX_DAT_PING_ADDR and CSI2_CTX_DAT_PONG_ADDR for the calculation of the address in memory. (shall be used only in interlace mode, otherwise set to '1')

Copyright © 2025 Texas Instruments Incorporated

Table 11-1476. CSI2_CTX3_CTRL1 Register Field Descriptions (continued)

Bit	Field	Type	Reset	Description
15-8	COUNT	R/W	0h	Sets the number of frame to acquire. Once the frame acquisition starts, the COUNT value is decremented after every frame. When COUNT reaches 0, the FRAME_NUMBER_IRQ interrupt is triggered and CTX_EN is set to '0'. Writes to this bit field are controlled by the COUNT_UNLOCK bit. During the same OCP write access , the bit-field COUNT_UNLOCK shall be written in addition to COUNT bit-field in order to change the COUNT value. COUNT can be overwritten dynamically with a new count value." 0: Infinite number of frames (no count). 1: 1 frame to acquire ... 255: 255 frames to acquire.
7	EOF_EN	R/W	0h	Indicates if the end of frame signal shall be asserted at the end of the frame Read 0: The end of frame signal is not asserted at the end of each frame. Read 1: The end of frame signal is asserted at the end of each frame.
6	EOL_EN	R/W	0h	Indicates if the end of line signal shall be asserted at the end of the line. Read 0: The end of line signal is not asserted at the end of each frame. Read 1: The end of line signal is asserted at the end of each frame.
5	CS_EN	R/W	0h	Enables the checksum check for the received payload (long packet only). 0: Disabled 1: Enabled
4	COUNT_UNLOCK	W	0h	Unlock writes to the COUNT bit field. Write 0: COUNT bit field is locked. Writes have no effect Write 1: COUNT bit field is unlocked. Writes are possible.
3	PING_PONG	R	1h	Indicates whether the PING or PONG destination address (CSI2_CTX_DAT_PING_ADDR or CSI2_CTX_DAT_PONG_ADDR) was used to write the last frame. This bit field toggles after every FEC_NUMBER FEC sync code received for the current context. Read 0: PING buffer Read 1: PONG buffer
2	VP_FORCE	R/W	0h	RESERVE FIELD
1	LINE_MODULO	R/W	0h	Line modulo configuration 0: CSI2_CTX_CTRL3.LINE_NUMBER is used once per frame for the generation of the LINE_NUMBER_IRQ. 1: CSI2_CTX_CTRL3.LINE_NUMBER is used as a modulo number for the generation of the LINE_NUMBER_IRQ (multiple times the interrupt can be generated for each frame)
0	CTX_EN	R/W	0h	Enables the Context 0: Disabled 1: Enabled

Copyright © 2025 Texas Instruments Incorporated

11.6.1.1.3.5.2.43 CSI2_CTX3_CTRL2 Register (Offset = D4h) [Reset = 00000000h]

CSI2_CTX3_CTRL2 is shown in Table 11-1477.

Return to the Summary Table.

CONTROL REGISTER - Context This register controls the Context. This register is shadowed: modifications are taken into account after the next FSC sync code (except for VIRTUAL_ID and FORMAT fields). The change of VIRTUIAL_ID and FORMAT ha

Table 11-1477. CSI2_CTX3_CTRL2 Register Field Descriptions

Bit	Field	Type	Reset	Description
31-16	FRAME	R	0h	Frame number. The CSI-2 protocol engine extracts the frame number from the SOF short packet sent by the camera.
15	RES20	R	0h	RESERVE FIELD
14-13	USER_DEF_MAPPING	R/W	0h	Selects the pixel format of USER_DEFINED in FORMAT 0x 0: RAW6 0x 1: RAW7 0x 2: RAW8 (not valid if FORMAT is USER_DEFINED_8_BIT_DATA_TYPE_x_EXP8 with x from 1 to 8)
12-11	VIRTUAL_ID	R/W	0h	Virtual channel ID 0x 0: Virtual Channel ID 0 0x 1: Virtual Channel ID 1 0x 2: Virtual Channel ID 2 0x 3: Virtual Channel ID 3
10	DPCM_PRED	R/W	0h	Selects the DPCM predictor. 0: The advanced predictor is used. Not supported for 10 – 8 – 10 algorithm. Performance limited to 1 pixel/cycle. 1: The simple predictor is used.

Copyright © 2025 Texas Instruments Incorporated

Table 11-1477. CSI2_CTX3_CTRL2 Register Field Descriptions (continued)

Bit	Field	Type	Reset	Description
9-0	FORMAT	R/W	0h	Data format selection. 0x 000: OTHERS (except NULL and BLANKING packets) 0x 012: Embedded 8-bit non-image data (e.g. JPEG) 0x 018: YUV420 8bit 0x 019: YUV420 10bit 0x01A: YUV420 8bit legacy 0x01C: YUV420 8bit + CSPS 0x01D: YUV420 10bit + CSPS 0x01E: YUV422 8bit 0x01F: YUV422 10bit 0x 022: RGB565 0x 024: RGB888 0x 028: RAW6 0x 029: RAW7 0x02A: RAW8 0x02B: RAW10 0x02C: RAW12 0x02D: RAW14 0x 033: RGB666 + EXP32_24 0x 040: USER_DEFINED_8_BIT_DATA_TYPE_1 0x 041: USER_DEFINED_8_BIT_DATA_TYPE_2 0x 042: USER_DEFINED_8_BIT_DATA_TYPE_3 0x 043: USER_DEFINED_8_BIT_DATA_TYPE_4 0x 044: USER_DEFINED_8_BIT_DATA_TYPE_5 0x 045: USER_DEFINED_8_BIT_DATA_TYPE_6 0x 046: USER_DEFINED_8_BIT_DATA_TYPE_7 0x 047: USER_DEFINED_8_BIT_DATA_TYPE_8 0x 068: RAW6 + EXP8 0x 069: RAW7 + EXP8 0x 080: USER_DEFINED_8_BIT_DATA_TYPE_1 + EXP8 0x 081: USER_DEFINED_8_BIT_DATA_TYPE_2 + EXP8 0x 082: USER_DEFINED_8_BIT_DATA_TYPE_3 + EXP8 0x 083: USER_DEFINED_8_BIT_DATA_TYPE_4 + EXP8 0x 084: USER_DEFINED_8_BIT_DATA_TYPE_5 + EXP8 0x 085: USER_DEFINED_8_BIT_DATA_TYPE_6 + EXP8 0x 086: USER_DEFINED_8_BIT_DATA_TYPE_7 + EXP8 0x 087: USER_DEFINED_8_BIT_DATA_TYPE_8 + EXP8 0x09E: YUV422 8bit + VP 0x0A 0: RGB444 + EXP16 0x0A 1: RGB555 + EXP16 0x0AB: RAW10 + EXP16 0x0AC: RAW12 + EXP16 0x0AD: RAW14 + EXP16 0x0DE: Same as YUV422 8bit + VP but data is send as 16-bit wide words to video port. Could be used together with the GENERIC and BYTESWAP features 0x0E 3: RGB666 + EXP32 0x0E 4: RGB888 + EXP32 0x0E 8: RAW6 + DPCM10 + VP 0x12A: RAW8 + VP 0x12C: RAW12 + VP 0x12D: RAW14 + VP 0x12F: RAW10 + VP 0x 140: USER_DEFINED_8_BIT_DATA_TYPE_1_DPCM12_VP 0x 141: USER_DEFINED_8_BIT_DATA_TYPE_2_DPCM12_VP 0x 142: USER_DEFINED_8_BIT_DATA_TYPE_3_DPCM12_VP 0x 143: USER_DEFINED_8_BIT_DATA_TYPE_4_DPCM12_VP 0x 144: USER_DEFINED_8_BIT_DATA_TYPE_5_DPCM12_VP 0x 145: USER_DEFINED_8_BIT_DATA_TYPE_6_DPCM12_VP 0x 146: USER_DEFINED_8_BIT_DATA_TYPE_7_DPCM12_VP 0x 147: USER_DEFINED_8_BIT_DATA_TYPE_8_DPCM12_VP 0x1C 0: USER_DEFINED_8_BIT_DATA_TYPE_1_DPCM12_EXP16 0x1C 1: USER_DEFINED_8_BIT_DATA_TYPE_2_DPCM12_EXP16 0x1C 2: USER_DEFINED_8_BIT_DATA_TYPE_3_DPCM12_EXP16 0x1C 3: USER_DEFINED_8_BIT_DATA_TYPE_4_DPCM12_EXP16 0x1C 4: USER_DEFINED_8_BIT_DATA_TYPE_5_DPCM12_EXP16 0x1C 5: USER_DEFINED_8_BIT_DATA_TYPE_6_DPCM12_EXP16 0x1C 6: USER_DEFINED_8_BIT_DATA_TYPE_7_DPCM12_EXP16 0x1C 7: USER_DEFINED_8_BIT_DATA_TYPE_8_DPCM12_EXP16 0x 229: RAW7 + DPCM10 + EXP16 0x2A 8: RAW6 + DPCM10 + EXP16 0x2AA: RAW8 + DPCM10 + EXP16 0x2C

Copyright © 2025 Texas Instruments Incorporated

Table 11-1477. CSI2_CTX3_CTRL2 Register Field Descriptions (continued)

Bit	Field	Type	Reset	Description
				0: USER_DEFINED_8_BIT_DATA_TYPE_1 + DPCM10 + EXP16 0x2C 1: USER_DEFINED_8_BIT_DATA_TYPE_2 + DPCM10 + EXP16 0x2C 2: USER_DEFINED_8_BIT_DATA_TYPE_3 + DPCM10 + EXP16 0x2C 3: USER_DEFINED_8_BIT_DATA_TYPE_4 + DPCM10 + EXP16 0x2C 4: USER_DEFINED_8_BIT_DATA_TYPE_5 + DPCM10 + EXP16 0x2C 5: USER_DEFINED_8_BIT_DATA_TYPE_6 + DPCM10 + EXP16 0x2C 6: USER_DEFINED_8_BIT_DATA_TYPE_7 + DPCM10 + EXP16 0x2C 7: USER_DEFINED_8_BIT_DATA_TYPE_8 + DPCM10 + EXP16 0x 329: RAW7 + DPCM10 + VP 0x32A: RAW8 + DPCM10 + VP 0x 340: USER_DEFINED_8_BIT_DATA_TYPE_1 + DPCM10 + VP 0x 341: USER_DEFINED_8_BIT_DATA_TYPE_2 + DPCM10 + VP 0x 342: USER_DEFINED_8_BIT_DATA_TYPE_3 + DPCM10 + VP 0x 343: USER_DEFINED_8_BIT_DATA_TYPE_4 + DPCM10 + VP 0x 344: USER_DEFINED_8_BIT_DATA_TYPE_5 + DPCM10 + VP 0x 345: USER_DEFINED_8_BIT_DATA_TYPE_6 + DPCM10 + VP 0x 346: USER_DEFINED_8_BIT_DATA_TYPE_7 + DPCM10 + VP 0x 347: USER_DEFINED_8_BIT_DATA_TYPE_8 + DPCM10 + VP 0x 368: RAW6 DPCM12 + VP 0x 369: RAW7 DPCM12 + EXP16 0x36A: RAW8 DPCM12 + EXP16 0x3A 8: RAW6 DPCM12 + EXP16 0x3A 9: RAW7 DPCM12 + VP 0x3AA: RAW8 DPCM12 + VP

Copyright © 2025 Texas Instruments Incorporated

11.6.1.1.3.5.2.44 CSI2_CTX3_DAT_OFST Register (Offset = D8h) [Reset = 00000000h]

CSI2_CTX3_DAT_OFST is shown in Table 11-1478.

Return to the Summary Table.

DATA MEM ADDRESS OFFSET REGISTER - Context This register sets the offset which is applied on the destination address after each line is written to memory. This register applies for both CSI2_CTX_DAT_PING_ADDR and CSI2_CTX_DAT_PONG_ADDR.

Table 11-1478. CSI2_CTX3_DAT_OFST Register Field Descriptions

Bit	Field	Type	Reset	Description
31-17	RES21	R	0h	RESERVE FIELD
16-5	OFST	R/W	0h	Line offset programmed in bytes (signed value 2's complement). If OFST = 0, the data is written contiguously in memory. Otherwise, OFST sets the destination offset between the first pixel of the previous line and the first pixel of the current line. Valid range: -2^{17} ~ (2^{17}-1)
4-0	RESERVED	R	0h	

Copyright © 2025 Texas Instruments Incorporated

11.6.1.1.3.5.2.45 CSI2_CTX3_DAT_PING_ADDR Register (Offset = DCh) [Reset = 00000000h]

CSI2_CTX3_DAT_PING_ADDR is shown in Table 11-1479.

Return to the Summary Table.

DATA MEM PING ADDRESS REGISTER - Context This register sets the 32-bit memory address where the pixel data are stored. The destination is double buffered: this register sets the PING address. Double buffering is enabled when the addresses

Table 11-1479. CSI2_CTX3_DAT_PING_ADDR Register Field Descriptions

Bit	Field	Type	Reset	Description
31-5	ADDR	R/W	0h	27 most significant bits of the 32-bit address.
4-0	RES	R	0h	RESERVE FIELD

Copyright © 2025 Texas Instruments Incorporated

11.6.1.1.3.5.2.46 CSI2_CTX3_DAT_PONG_ADDR Register (Offset = E0h) [Reset = 00000000h]

CSI2_CTX3_DAT_PONG_ADDR is shown in Table 11-1480.

Return to the Summary Table.

DATA MEM PONG ADDRESS REGISTER - Context This register sets the 32-bit memory address where the pixel data are stored. The destination is double buffered: this register sets the PONG address. Double buffering is enabled when the addresses

Table 11-1480. CSI2_CTX3_DAT_PONG_ADDR Register Field Descriptions

Bit	Field	Type	Reset	Description
31-5	ADDR	R/W	0h	27 most significant bits of the 32-bit address.
4-0	RES	R	0h	RESERVE FIELD

Copyright © 2025 Texas Instruments Incorporated

11.6.1.1.3.5.2.47 CSI2_CTX3_IRQENABLE Register (Offset = E4h) [Reset = 00000000h]

CSI2_CTX3_IRQENABLE is shown in Table 11-1481.

Return to the Summary Table.

INTERRUPT ENABLE REGISTER - Context This register regroups all the events related to Context.

Table 11-1481. CSI2_CTX3_IRQENABLE Register Field Descriptions

Bit	Field	Type	Reset	Description
31-9	RES22	R	0h	RESERVE FIELD
8	ECC_CORRECTION_IRQ	R/W	0h	Context - ECC has been used to correct the only 1-bit error (long packet only). 0: Event is masked 1: Event generates an interrupt when it occurs
7	LINE_NUMBER_IRQ	R/W	0h	Context - Line number is reached. 0: Event is masked 1: Event generates an interrupt when it occurs
6	FRAME_NUMBER_IRQ	R/W	0h	Context - Frame counter reached. 0: Event is masked 1: Event generates an interrupt when it occurs
5	CS_IRQ	R/W	0h	Context - Check-Sum of the payload mismatch detection 0: Event is masked 1: Event generates an interrupt when it occurs
4	RES23	R	0h	RESERVE FIELD
3	LE_IRQ	R/W	0h	Context - Line end sync code detection. 0: Event is masked 1: Event generates an interrupt when it occurs
2	LS_IRQ	R/W	0h	Context - Line start sync code detection. 0: Event is masked 1: Event generates an interrupt when it occurs
1	FE_IRQ	R/W	0h	Context - Frame end sync code detection. 0: Event is masked 1: Event generates an interrupt when it occurs
0	FS_IRQ	R/W	0h	Context - Frame start sync code detection. 0: Event is masked 1: Event generates an interrupt when it occurs

Copyright © 2025 Texas Instruments Incorporated

11.6.1.1.3.5.2.48 CSI2_CTX3_IRQSTATUS Register (Offset = E8h) [Reset = 00000000h]

CSI2_CTX3_IRQSTATUS is shown in Table 11-1482.

Return to the Summary Table.

INTERRUPT STATUS REGISTER - Context This register regroups all the events related to Context.

Table 11-1482. CSI2_CTX3_IRQSTATUS Register Field Descriptions

Bit	Field	Type	Reset	Description
31-9	RES24	R	0h	RESERVE FIELD
8	ECC_CORRECTION_IRQ	R/W	0h	Context - ECC has been used to do the correction of the only 1-bit error status (long packet only). 0: READS: Event is false. WRITES: Status bit unchanged. 1: READS: Event is true (pending). WRITES: Status bit is reset. . - (RW W1toClr)
7	LINE_NUMBER_IRQ	R/W	0h	Contexc - Line number reached status. 0: READS: Event is false. WRITES: Status bit unchanged. 1: READS: Event is true (pending). WRITES: Status bit is reset. - (RW W1toClr)
6	FRAME_NUMBER_IRQ	R/W	0h	Context - Frame counter reached status 0: READS: Event is false. WRITES: Status bit unchanged. 1: READS: Event is true (pending). WRITES: Status bit is reset. - (RW W1toClr)
5	CS_IRQ	R/W	0h	Context - Check-Sum mismatch status. 0: READS: Event is false. WRITES: Status bit unchanged. 1: READS: Event is true (pending). WRITES: Status bit is reset. - (RW W1toClr)
4	RES25	R	0h	RESERVE FIELD
3	LE_IRQ	R/W	0h	Context - Line end sync code detection status. 0: READS: Event is false. WRITES: Status bit unchanged. 1: READS: Event is true (pending). WRITES: Status bit is reset. . - (RW W1toClr)
2	LS_IRQ	R/W	0h	Context - Line start sync code detection status. 0: READS: Event is false. WRITES: Status bit unchanged. 1: READS: Event is true (pending). WRITES: Status bit is reset. - (RW W1toClr)
1	FE_IRQ	R/W	0h	Context - Frame end sync code detection status. 0: READS: Event is false. WRITES: Status bit unchanged. 1: READS: Event is true (pending). WRITES: Status bit is reset. - (RW W1toClr)
0	FS_IRQ	R/W	0h	Context - Frame start sync code detection status. 0: READS: Event is false. WRITES: Status bit unchanged. 1: READS: Event is true (pending). WRITES: Status bit is reset. - (RW W1toClr)

Copyright © 2025 Texas Instruments Incorporated

11.6.1.1.3.5.2.49 CSI2_CTX3_CTRL3 Register (Offset = ECh) [Reset = 00000000h]

CSI2_CTX3_CTRL3 is shown in Table 11-1483.

Return to the Summary Table.

CONTROL REGISTER - Context This register controls the Context. This register is shadowed: modifications are taken into account after the next FSC sync code.

Table 11-1483. CSI2_CTX3_CTRL3 Register Field Descriptions

Bit	Field	Type	Reset	Description
31-30	RESERVED	R	0h	Reserved
29-16	ALPHA	R/W	0h	When TRANSCODE=0 Alpha value for RGB888, RGB666 and RBG444. When TRANSCODE=1 and BYS=1 Image width, in pixels, acquired from the BYS port.
15-0	LINE_NUMBER	R/W	0h	Line number for the interrupt generation

Copyright © 2025 Texas Instruments Incorporated

11.6.1.1.3.5.2.50 CSI2_CTX4_CTRL1 Register (Offset = F0h) [Reset = 00010008h]

CSI2_CTX4_CTRL1 is shown in Table 11-1484.

Return to the Summary Table.

CONTROL REGISTER - Context This register controls the Context. This register is shadowed: modifications are taken into account after the next FSC sync code.

Table 11-1484. CSI2_CTX4_CTRL1 Register Field Descriptions

Bit	Field	Type	Reset	Description
31	BYTESWAP	R/W	0h	Allows swapping bytes two by two in the payload data. It doesn't affect - short packets - long packet header or footers - CRC calculation The purpose is to by swap data send to the OCP port and/or video port 0: Disabled 1: Enabled
30	GENERIC	R/W	0h	Enables the generic mode. 0: Disabled. Data is received according to CSI2_CTX_CTRL1.FORMAT and the long packet code transmitted in the MIPI stream is used. 1: Enabled. Data is received according to CSI2_CTX_CTRL1.FORMAT and the long packet code transmitted in the MIPI stream is ignored.
29	RES19	R	0h	RESERVE FIELD
28	HSCALE	R/W	0h	Enable horizontal downscaling by a factor of two. Applies to RAW data when transcoding is enabled. Must be disabled when transcoding is disabled. 0: Disable 1: Enable
27-24	TRANSCODE	R/W	0h	Enables image transcoding. When this features is enabled: - the data format from the camera is defined by the FORMAT register - the format after transcode is defined by the TRANSCODE register. The memory storage / video port formats is defined by the TRANSCODE register 0x 0: Feature disabled. 0x 1: Outputs DPCM compressed RAW10 data. After compression, pixels are coded on 8 bits. Data in memory is organized as regular RAW8 data 0x 2: Outputs DPCM compressed RAW12 data. After compression, pixels are coded on 8 bits. Data in memory is organized as regular RAW8 data 0x 3: Outputs ALAW compressed RAW10 data. After compression, pixels are coded on 8 bits. Data in memory is organized as regular RAW8 data. 0x 4: Outputs uncompressed RAW8 data. Data in memory is organized as regular RAW8 data 0x 5: Outputs uncompressed RAW10 data. Data in memory is organized as regular RAW10+EXP16 data 0x 6: Outputs uncompressed RAW10 data. Data in memory is organized as regular packed RAW10 data 0x 7: Outputs uncompressed RAW12 data. Data in memory is organized as regular RAW12+EXP16 data 0x 8: Outputs uncompressed RAW12 data. Data in memory is organized as regular packed RAW12 data 0x 9: Outputs uncompressed RAW14 data.
23-16	FEC_NUMBER	R/W	1h	Number of FEC to receive between using swap of CSI2_CTX_DAT_PING_ADDR and CSI2_CTX_DAT_PONG_ADDR for the calculation of the address in memory. (shall be used only in interlace mode, otherwise set to '1')

Copyright © 2025 Texas Instruments Incorporated

Table 11-1484. CSI2_CTX4_CTRL1 Register Field Descriptions (continued)

Bit	Field	Type	Reset	Description
15-8	COUNT	R/W	0h	Sets the number of frame to acquire. Once the frame acquisition starts, the COUNT value is decremented after every frame. When COUNT reaches 0, the FRAME_NUMBER_IRQ interrupt is triggered and CTX_EN is set to '0'. Writes to this bit field are controlled by the COUNT_UNLOCK bit. During the same OCP write access , the bit-field COUNT_UNLOCK shall be written in addition to COUNT bit-field in order to change the COUNT value. COUNT can be overwritten dynamically with a new count value." 0: Infinite number of frames (no count). 1: 1 frame to acquire ... 255: 255 frames to acquire.
7	EOF_EN	R/W	0h	Indicates if the end of frame signal shall be asserted at the end of the frame Read 0: The end of frame signal is not asserted at the end of each frame. Read 1: The end of frame signal is asserted at the end of each frame.
6	EOL_EN	R/W	0h	Indicates if the end of line signal shall be asserted at the end of the line. Read 0: The end of line signal is not asserted at the end of each frame. Read 1: The end of line signal is asserted at the end of each frame.
5	CS_EN	R/W	0h	Enables the checksum check for the received payload (long packet only). 0: Disabled 1: Enabled
4	COUNT_UNLOCK	W	0h	Unlock writes to the COUNT bit field. Write 0: COUNT bit field is locked. Writes have no effect Write 1: COUNT bit field is unlocked. Writes are possible.
3	PING_PONG	R	1h	Indicates whether the PING or PONG destination address (CSI2_CTX_DAT_PING_ADDR or CSI2_CTX_DAT_PONG_ADDR) was used to write the last frame. This bit field toggles after every FEC_NUMBER FEC sync code received for the current context. Read 0: PING buffer Read 1: PONG buffer
2	VP_FORCE	R/W	0h	RESERVE FIELD
1	LINE_MODULO	R/W	0h	Line modulo configuration 0: CSI2_CTX_CTRL3.LINE_NUMBER is used once per frame for the generation of the LINE_NUMBER_IRQ. 1: CSI2_CTX_CTRL3.LINE_NUMBER is used as a modulo number for the generation of the LINE_NUMBER_IRQ (multiple times the interrupt can be generated for each frame)
0	CTX_EN	R/W	0h	Enables the Context 0: Disabled 1: Enabled

Copyright © 2025 Texas Instruments Incorporated

11.6.1.1.3.5.2.51 CSI2_CTX4_CTRL2 Register (Offset = F4h) [Reset = 00000000h]

CSI2_CTX4_CTRL2 is shown in Table 11-1485.

Return to the Summary Table.

CONTROL REGISTER - Context This register controls the Context. This register is shadowed: modifications are taken into account after the next FSC sync code (except for VIRTUAL_ID and FORMAT fields). The change of VIRTUIAL_ID and FORMAT ha

Table 11-1485. CSI2_CTX4_CTRL2 Register Field Descriptions

Bit	Field	Type	Reset	Description
31-16	FRAME	R	0h	Frame number. The CSI-2 protocol engine extracts the frame number from the SOF short packet sent by the camera.
15	RES20	R	0h	RESERVE FIELD
14-13	USER_DEF_MAPPING	R/W	0h	Selects the pixel format of USER_DEFINED in FORMAT 0x 0: RAW6 0x 1: RAW7 0x 2: RAW8 (not valid if FORMAT is USER_DEFINED_8_BIT_DATA_TYPE_x_EXP8 with x from 1 to 8)
12-11	VIRTUAL_ID	R/W	0h	Virtual channel ID 0x 0: Virtual Channel ID 0 0x 1: Virtual Channel ID 1 0x 2: Virtual Channel ID 2 0x 3: Virtual Channel ID 3
10	DPCM_PRED	R/W	0h	Selects the DPCM predictor. 0: The advanced predictor is used. Not supported for 10 – 8 – 10 algorithm. Performance limited to 1 pixel/cycle. 1: The simple predictor is used.

Copyright © 2025 Texas Instruments Incorporated

Table 11-1485. CSI2_CTX4_CTRL2 Register Field Descriptions (continued)

Bit	Field	Type	Reset	Description
9-0	FORMAT	R/W	0h	Data format selection. 0x 000: OTHERS (except NULL and BLANKING packets) 0x 012: Embedded 8-bit non-image data (e.g. JPEG) 0x 018: YUV420 8bit 0x 019: YUV420 10bit 0x01A: YUV420 8bit legacy 0x01C: YUV420 8bit + CSPS 0x01D: YUV420 10bit + CSPS 0x01E: YUV422 8bit 0x01F: YUV422 10bit 0x 022: RGB565 0x 024: RGB888 0x 028: RAW6 0x 029: RAW7 0x02A: RAW8 0x02B: RAW10 0x02C: RAW12 0x02D: RAW14 0x 033: RGB666 + EXP32_24 0x 040: USER_DEFINED_8_BIT_DATA_TYPE_1 0x 041: USER_DEFINED_8_BIT_DATA_TYPE_2 0x 042: USER_DEFINED_8_BIT_DATA_TYPE_3 0x 043: USER_DEFINED_8_BIT_DATA_TYPE_4 0x 044: USER_DEFINED_8_BIT_DATA_TYPE_5 0x 045: USER_DEFINED_8_BIT_DATA_TYPE_6 0x 046: USER_DEFINED_8_BIT_DATA_TYPE_7 0x 047: USER_DEFINED_8_BIT_DATA_TYPE_8 0x 068: RAW6 + EXP8 0x 069: RAW7 + EXP8 0x 080: USER_DEFINED_8_BIT_DATA_TYPE_1 + EXP8 0x 081: USER_DEFINED_8_BIT_DATA_TYPE_2 + EXP8 0x 082: USER_DEFINED_8_BIT_DATA_TYPE_3 + EXP8 0x 083: USER_DEFINED_8_BIT_DATA_TYPE_4 + EXP8 0x 084: USER_DEFINED_8_BIT_DATA_TYPE_5 + EXP8 0x 085: USER_DEFINED_8_BIT_DATA_TYPE_6 + EXP8 0x 086: USER_DEFINED_8_BIT_DATA_TYPE_7 + EXP8 0x 087: USER_DEFINED_8_BIT_DATA_TYPE_8 + EXP8 0x09E: YUV422 8bit + VP 0x0A 0: RGB444 + EXP16 0x0A 1: RGB555 + EXP16 0x0AB: RAW10 + EXP16 0x0AC: RAW12 + EXP16 0x0AD: RAW14 + EXP16 0x0DE: Same as YUV422 8bit + VP but data is send as 16-bit wide words to video port. Could be used together with the GENERIC and BYTESWAP features 0x0E 3: RGB666 + EXP32 0x0E 4: RGB888 + EXP32 0x0E 8: RAW6 + DPCM10 + VP 0x12A: RAW8 + VP 0x12C: RAW12 + VP 0x12D: RAW14 + VP 0x12F: RAW10 + VP 0x 140: USER_DEFINED_8_BIT_DATA_TYPE_1_DPCM12_VP 0x 141: USER_DEFINED_8_BIT_DATA_TYPE_2_DPCM12_VP 0x 142: USER_DEFINED_8_BIT_DATA_TYPE_3_DPCM12_VP 0x 143: USER_DEFINED_8_BIT_DATA_TYPE_4_DPCM12_VP 0x 144: USER_DEFINED_8_BIT_DATA_TYPE_5_DPCM12_VP 0x 145: USER_DEFINED_8_BIT_DATA_TYPE_6_DPCM12_VP 0x 146: USER_DEFINED_8_BIT_DATA_TYPE_7_DPCM12_VP 0x 147: USER_DEFINED_8_BIT_DATA_TYPE_8_DPCM12_VP 0x1C 0: USER_DEFINED_8_BIT_DATA_TYPE_1_DPCM12_EXP16 0x1C 1: USER_DEFINED_8_BIT_DATA_TYPE_2_DPCM12_EXP16 0x1C 2: USER_DEFINED_8_BIT_DATA_TYPE_3_DPCM12_EXP16 0x1C 3: USER_DEFINED_8_BIT_DATA_TYPE_4_DPCM12_EXP16 0x1C 4: USER_DEFINED_8_BIT_DATA_TYPE_5_DPCM12_EXP16 0x1C 5: USER_DEFINED_8_BIT_DATA_TYPE_6_DPCM12_EXP16 0x1C 6: USER_DEFINED_8_BIT_DATA_TYPE_7_DPCM12_EXP16 0x1C 7: USER_DEFINED_8_BIT_DATA_TYPE_8_DPCM12_EXP16 0x 229: RAW7 + DPCM10 + EXP16 0x2A 8: RAW6 + DPCM10 + EXP16 0x2AA: RAW8 + DPCM10 + EXP16 0x2C

Copyright © 2025 Texas Instruments Incorporated

Table 11-1485. CSI2_CTX4_CTRL2 Register Field Descriptions (continued)

Bit	Field	Type	Reset	Description
				0: USER_DEFINED_8_BIT_DATA_TYPE_1 + DPCM10 + EXP16 0x2C 1: USER_DEFINED_8_BIT_DATA_TYPE_2 + DPCM10 + EXP16 0x2C 2: USER_DEFINED_8_BIT_DATA_TYPE_3 + DPCM10 + EXP16 0x2C 3: USER_DEFINED_8_BIT_DATA_TYPE_4 + DPCM10 + EXP16 0x2C 4: USER_DEFINED_8_BIT_DATA_TYPE_5 + DPCM10 + EXP16 0x2C 5: USER_DEFINED_8_BIT_DATA_TYPE_6 + DPCM10 + EXP16 0x2C 6: USER_DEFINED_8_BIT_DATA_TYPE_7 + DPCM10 + EXP16 0x2C 7: USER_DEFINED_8_BIT_DATA_TYPE_8 + DPCM10 + EXP16 0x 329: RAW7 + DPCM10 + VP 0x32A: RAW8 + DPCM10 + VP 0x 340: USER_DEFINED_8_BIT_DATA_TYPE_1 + DPCM10 + VP 0x 341: USER_DEFINED_8_BIT_DATA_TYPE_2 + DPCM10 + VP 0x 342: USER_DEFINED_8_BIT_DATA_TYPE_3 + DPCM10 + VP 0x 343: USER_DEFINED_8_BIT_DATA_TYPE_4 + DPCM10 + VP 0x 344: USER_DEFINED_8_BIT_DATA_TYPE_5 + DPCM10 + VP 0x 345: USER_DEFINED_8_BIT_DATA_TYPE_6 + DPCM10 + VP 0x 346: USER_DEFINED_8_BIT_DATA_TYPE_7 + DPCM10 + VP 0x 347: USER_DEFINED_8_BIT_DATA_TYPE_8 + DPCM10 + VP 0x 368: RAW6 DPCM12 + VP 0x 369: RAW7 DPCM12 + EXP16 0x36A: RAW8 DPCM12 + EXP16 0x3A 8: RAW6 DPCM12 + EXP16 0x3A 9: RAW7 DPCM12 + VP 0x3AA: RAW8 DPCM12 + VP

Copyright © 2025 Texas Instruments Incorporated

11.6.1.1.3.5.2.52 CSI2_CTX4_DAT_OFST Register (Offset = F8h) [Reset = 00000000h]

CSI2_CTX4_DAT_OFST is shown in Table 11-1486.

Return to the Summary Table.

DATA MEM ADDRESS OFFSET REGISTER - Context This register sets the offset which is applied on the destination address after each line is written to memory. This register applies for both CSI2_CTX_DAT_PING_ADDR and CSI2_CTX_DAT_PONG_ADDR.

Table 11-1486. CSI2_CTX4_DAT_OFST Register Field Descriptions

Bit	Field	Type	Reset	Description
31-17	RES21	R	0h	RESERVE FIELD
16-5	OFST	R/W	0h	Line offset programmed in bytes (signed value 2's complement). If OFST = 0, the data is written contiguously in memory. Otherwise, OFST sets the destination offset between the first pixel of the previous line and the first pixel of the current line. Valid range: -2^{17} ~ (2^{17}-1)
4-0	RESERVED	R	0h	

Copyright © 2025 Texas Instruments Incorporated

11.6.1.1.3.5.2.53 CSI2_CTX4_DAT_PING_ADDR Register (Offset = FCh) [Reset = 00000000h]

CSI2_CTX4_DAT_PING_ADDR is shown in Table 11-1487.

Return to the Summary Table.

DATA MEM PING ADDRESS REGISTER - Context This register sets the 32-bit memory address where the pixel data are stored. The destination is double buffered: this register sets the PING address. Double buffering is enabled when the addresses

Table 11-1487. CSI2_CTX4_DAT_PING_ADDR Register Field Descriptions

Bit	Field	Type	Reset	Description
31-5	ADDR	R/W	0h	27 most significant bits of the 32-bit address.
4-0	RES	R	0h	RESERVE FIELD

Copyright © 2025 Texas Instruments Incorporated

11.6.1.1.3.5.2.54 CSI2_CTX4_DAT_PONG_ADDR Register (Offset = 100h) [Reset = 00000000h]

CSI2_CTX4_DAT_PONG_ADDR is shown in Table 11-1488.

Return to the Summary Table.

DATA MEM PONG ADDRESS REGISTER - Context This register sets the 32-bit memory address where the pixel data are stored. The destination is double buffered: this register sets the PONG address. Double buffering is enabled when the addresses

Table 11-1488. CSI2_CTX4_DAT_PONG_ADDR Register Field Descriptions

Bit	Field	Type	Reset	Description
31-5	ADDR	R/W	0h	27 most significant bits of the 32-bit address.
4-0	RES	R	0h	RESERVE FIELD

Copyright © 2025 Texas Instruments Incorporated

11.6.1.1.3.5.2.55 CSI2_CTX4_IRQENABLE Register (Offset = 104h) [Reset = 00000000h]

CSI2_CTX4_IRQENABLE is shown in Table 11-1489.

Return to the Summary Table.

INTERRUPT ENABLE REGISTER - Context This register regroups all the events related to Context.

Table 11-1489. CSI2_CTX4_IRQENABLE Register Field Descriptions

Bit	Field	Type	Reset	Description
31-9	RES22	R	0h	RESERVE FIELD
8	ECC_CORRECTION_IRQ	R/W	0h	Context - ECC has been used to correct the only 1-bit error (long packet only). 0: Event is masked 1: Event generates an interrupt when it occurs
7	LINE_NUMBER_IRQ	R/W	0h	Context - Line number is reached. 0: Event is masked 1: Event generates an interrupt when it occurs
6	FRAME_NUMBER_IRQ	R/W	0h	Context - Frame counter reached. 0: Event is masked 1: Event generates an interrupt when it occurs
5	CS_IRQ	R/W	0h	Context - Check-Sum of the payload mismatch detection 0: Event is masked 1: Event generates an interrupt when it occurs
4	RES23	R	0h	RESERVE FIELD
3	LE_IRQ	R/W	0h	Context - Line end sync code detection. 0: Event is masked 1: Event generates an interrupt when it occurs
2	LS_IRQ	R/W	0h	Context - Line start sync code detection. 0: Event is masked 1: Event generates an interrupt when it occurs
1	FE_IRQ	R/W	0h	Context - Frame end sync code detection. 0: Event is masked 1: Event generates an interrupt when it occurs
0	FS_IRQ	R/W	0h	Context - Frame start sync code detection. 0: Event is masked 1: Event generates an interrupt when it occurs

Copyright © 2025 Texas Instruments Incorporated

11.6.1.1.3.5.2.56 CSI2_CTX4_IRQSTATUS Register (Offset = 108h) [Reset = 00000000h]

CSI2_CTX4_IRQSTATUS is shown in Table 11-1490.

Return to the Summary Table.

INTERRUPT STATUS REGISTER - Context This register regroups all the events related to Context.

Table 11-1490. CSI2_CTX4_IRQSTATUS Register Field Descriptions

Bit	Field	Type	Reset	Description
31-9	RES24	R	0h	RESERVE FIELD
8	ECC_CORRECTION_IRQ	R/W	0h	Context - ECC has been used to do the correction of the only 1-bit error status (long packet only). 0: READS: Event is false. WRITES: Status bit unchanged. 1: READS: Event is true (pending). WRITES: Status bit is reset. . - (RW W1toClr)
7	LINE_NUMBER_IRQ	R/W	0h	Contexc - Line number reached status. 0: READS: Event is false. WRITES: Status bit unchanged. 1: READS: Event is true (pending). WRITES: Status bit is reset. - (RW W1toClr)
6	FRAME_NUMBER_IRQ	R/W	0h	Context - Frame counter reached status 0: READS: Event is false. WRITES: Status bit unchanged. 1: READS: Event is true (pending). WRITES: Status bit is reset. - (RW W1toClr)
5	CS_IRQ	R/W	0h	Context - Check-Sum mismatch status. 0: READS: Event is false. WRITES: Status bit unchanged. 1: READS: Event is true (pending). WRITES: Status bit is reset. - (RW W1toClr)
4	RES25	R	0h	RESERVE FIELD
3	LE_IRQ	R/W	0h	Context - Line end sync code detection status. 0: READS: Event is false. WRITES: Status bit unchanged. 1: READS: Event is true (pending). WRITES: Status bit is reset. . - (RW W1toClr)
2	LS_IRQ	R/W	0h	Context - Line start sync code detection status. 0: READS: Event is false. WRITES: Status bit unchanged. 1: READS: Event is true (pending). WRITES: Status bit is reset. - (RW W1toClr)
1	FE_IRQ	R/W	0h	Context - Frame end sync code detection status. 0: READS: Event is false. WRITES: Status bit unchanged. 1: READS: Event is true (pending). WRITES: Status bit is reset. - (RW W1toClr)
0	FS_IRQ	R/W	0h	Context - Frame start sync code detection status. 0: READS: Event is false. WRITES: Status bit unchanged. 1: READS: Event is true (pending). WRITES: Status bit is reset. - (RW W1toClr)

Copyright © 2025 Texas Instruments Incorporated

11.6.1.1.3.5.2.57 CSI2_CTX4_CTRL3 Register (Offset = 10Ch) [Reset = 00000000h]

CSI2_CTX4_CTRL3 is shown in Table 11-1491.

Return to the Summary Table.

CONTROL REGISTER - Context This register controls the Context. This register is shadowed: modifications are taken into account after the next FSC sync code.

Table 11-1491. CSI2_CTX4_CTRL3 Register Field Descriptions

Bit	Field	Type	Reset	Description
31-30	RESERVED	R	0h	Reserved
29-16	ALPHA	R/W	0h	When TRANSCODE=0 Alpha value for RGB888, RGB666 and RBG444. When TRANSCODE=1 and BYS=1 Image width, in pixels, acquired from the BYS port.
15-0	LINE_NUMBER	R/W	0h	Line number for the interrupt generation

Copyright © 2025 Texas Instruments Incorporated

11.6.1.1.3.5.2.58 CSI2_CTX5_CTRL1 Register (Offset = 110h) [Reset = 00010008h]

CSI2_CTX5_CTRL1 is shown in Table 11-1492.

Return to the Summary Table.

CONTROL REGISTER - Context This register controls the Context. This register is shadowed: modifications are taken into account after the next FSC sync code.

Table 11-1492. CSI2_CTX5_CTRL1 Register Field Descriptions

Bit	Field	Type	Reset	Description
31	BYTESWAP	R/W	0h	Allows swapping bytes two by two in the payload data. It doesn't affect - short packets - long packet header or footers - CRC calculation The purpose is to by swap data send to the OCP port and/or video port 0: Disabled 1: Enabled
30	GENERIC	R/W	0h	Enables the generic mode. 0: Disabled. Data is received according to CSI2_CTX_CTRL1.FORMAT and the long packet code transmitted in the MIPI stream is used. 1: Enabled. Data is received according to CSI2_CTX_CTRL1.FORMAT and the long packet code transmitted in the MIPI stream is ignored.
29	RES19	R	0h	RESERVE FIELD
28	HSCALE	R/W	0h	Enable horizontal downscaling by a factor of two. Applies to RAW data when transcoding is enabled. Must be disabled when transcoding is disabled. 0: Disable 1: Enable
27-24	TRANSCODE	R/W	0h	Enables image transcoding. When this features is enabled: - the data format from the camera is defined by the FORMAT register - the format after transcode is defined by the TRANSCODE register. The memory storage / video port formats is defined by the TRANSCODE register 0x 0: Feature disabled. 0x 1: Outputs DPCM compressed RAW10 data. After compression, pixels are coded on 8 bits. Data in memory is organized as regular RAW8 data 0x 2: Outputs DPCM compressed RAW12 data. After compression, pixels are coded on 8 bits. Data in memory is organized as regular RAW8 data 0x 3: Outputs ALAW compressed RAW10 data. After compression, pixels are coded on 8 bits. Data in memory is organized as regular RAW8 data. 0x 4: Outputs uncompressed RAW8 data. Data in memory is organized as regular RAW8 data 0x 5: Outputs uncompressed RAW10 data. Data in memory is organized as regular RAW10+EXP16 data 0x 6: Outputs uncompressed RAW10 data. Data in memory is organized as regular packed RAW10 data 0x 7: Outputs uncompressed RAW12 data. Data in memory is organized as regular RAW12+EXP16 data 0x 8: Outputs uncompressed RAW12 data. Data in memory is organized as regular packed RAW12 data 0x 9: Outputs uncompressed RAW14 data.
23-16	FEC_NUMBER	R/W	1h	Number of FEC to receive between using swap of CSI2_CTX_DAT_PING_ADDR and CSI2_CTX_DAT_PONG_ADDR for the calculation of the address in memory. (shall be used only in interlace mode, otherwise set to '1')

Copyright © 2025 Texas Instruments Incorporated

Table 11-1492. CSI2_CTX5_CTRL1 Register Field Descriptions (continued)

Bit	Field	Type	Reset	Description
15-8	COUNT	R/W	0h	Sets the number of frame to acquire. Once the frame acquisition starts, the COUNT value is decremented after every frame. When COUNT reaches 0, the FRAME_NUMBER_IRQ interrupt is triggered and CTX_EN is set to '0'. Writes to this bit field are controlled by the COUNT_UNLOCK bit. During the same OCP write access , the bit-field COUNT_UNLOCK shall be written in addition to COUNT bit-field in order to change the COUNT value. COUNT can be overwritten dynamically with a new count value." 0: Infinite number of frames (no count). 1: 1 frame to acquire ... 255: 255 frames to acquire.
7	EOF_EN	R/W	0h	Indicates if the end of frame signal shall be asserted at the end of the frame Read 0: The end of frame signal is not asserted at the end of each frame. Read 1: The end of frame signal is asserted at the end of each frame.
6	EOL_EN	R/W	0h	Indicates if the end of line signal shall be asserted at the end of the line. Read 0: The end of line signal is not asserted at the end of each frame. Read 1: The end of line signal is asserted at the end of each frame.
5	CS_EN	R/W	0h	Enables the checksum check for the received payload (long packet only). 0: Disabled 1: Enabled
4	COUNT_UNLOCK	W	0h	Unlock writes to the COUNT bit field. Write 0: COUNT bit field is locked. Writes have no effect Write 1: COUNT bit field is unlocked. Writes are possible.
3	PING_PONG	R	1h	Indicates whether the PING or PONG destination address (CSI2_CTX_DAT_PING_ADDR or CSI2_CTX_DAT_PONG_ADDR) was used to write the last frame. This bit field toggles after every FEC_NUMBER FEC sync code received for the current context. Read 0: PING buffer Read 1: PONG buffer
2	VP_FORCE	R/W	0h	RESERVE FIELD
1	LINE_MODULO	R/W	0h	Line modulo configuration 0: CSI2_CTX_CTRL3.LINE_NUMBER is used once per frame for the generation of the LINE_NUMBER_IRQ. 1: CSI2_CTX_CTRL3.LINE_NUMBER is used as a modulo number for the generation of the LINE_NUMBER_IRQ (multiple times the interrupt can be generated for each frame)
0	CTX_EN	R/W	0h	Enables the Context 0: Disabled 1: Enabled

Copyright © 2025 Texas Instruments Incorporated

11.6.1.1.3.5.2.59 CSI2_CTX5_CTRL2 Register (Offset = 114h) [Reset = 00000000h]

CSI2_CTX5_CTRL2 is shown in Table 11-1493.

Return to the Summary Table.

CONTROL REGISTER - Context This register controls the Context. This register is shadowed: modifications are taken into account after the next FSC sync code (except for VIRTUAL_ID and FORMAT fields). The change of VIRTUIAL_ID and FORMAT ha

Table 11-1493. CSI2_CTX5_CTRL2 Register Field Descriptions

Bit	Field	Type	Reset	Description
31-16	FRAME	R	0h	Frame number. The CSI-2 protocol engine extracts the frame number from the SOF short packet sent by the camera.
15	RES20	R	0h	RESERVE FIELD
14-13	USER_DEF_MAPPING	R/W	0h	Selects the pixel format of USER_DEFINED in FORMAT 0x 0: RAW6 0x 1: RAW7 0x 2: RAW8 (not valid if FORMAT is USER_DEFINED_8_BIT_DATA_TYPE_x_EXP8 with x from 1 to 8)
12-11	VIRTUAL_ID	R/W	0h	Virtual channel ID 0x 0: Virtual Channel ID 0 0x 1: Virtual Channel ID 1 0x 2: Virtual Channel ID 2 0x 3: Virtual Channel ID 3
10	DPCM_PRED	R/W	0h	Selects the DPCM predictor. 0: The advanced predictor is used. Not supported for 10 – 8 – 10 algorithm. Performance limited to 1 pixel/cycle. 1: The simple predictor is used.

Copyright © 2025 Texas Instruments Incorporated

Table 11-1493. CSI2_CTX5_CTRL2 Register Field Descriptions (continued)

Bit	Field	Type	Reset	Description
9-0	FORMAT	R/W	0h	Data format selection. 0x 000: OTHERS (except NULL and BLANKING packets) 0x 012: Embedded 8-bit non-image data (e.g. JPEG) 0x 018: YUV420 8bit 0x 019: YUV420 10bit 0x01A: YUV420 8bit legacy 0x01C: YUV420 8bit + CSPS 0x01D: YUV420 10bit + CSPS 0x01E: YUV422 8bit 0x01F: YUV422 10bit 0x 022: RGB565 0x 024: RGB888 0x 028: RAW6 0x 029: RAW7 0x02A: RAW8 0x02B: RAW10 0x02C: RAW12 0x02D: RAW14 0x 033: RGB666 + EXP32_24 0x 040: USER_DEFINED_8_BIT_DATA_TYPE_1 0x 041: USER_DEFINED_8_BIT_DATA_TYPE_2 0x 042: USER_DEFINED_8_BIT_DATA_TYPE_3 0x 043: USER_DEFINED_8_BIT_DATA_TYPE_4 0x 044: USER_DEFINED_8_BIT_DATA_TYPE_5 0x 045: USER_DEFINED_8_BIT_DATA_TYPE_6 0x 046: USER_DEFINED_8_BIT_DATA_TYPE_7 0x 047: USER_DEFINED_8_BIT_DATA_TYPE_8 0x 068: RAW6 + EXP8 0x 069: RAW7 + EXP8 0x 080: USER_DEFINED_8_BIT_DATA_TYPE_1 + EXP8 0x 081: USER_DEFINED_8_BIT_DATA_TYPE_2 + EXP8 0x 082: USER_DEFINED_8_BIT_DATA_TYPE_3 + EXP8 0x 083: USER_DEFINED_8_BIT_DATA_TYPE_4 + EXP8 0x 084: USER_DEFINED_8_BIT_DATA_TYPE_5 + EXP8 0x 085: USER_DEFINED_8_BIT_DATA_TYPE_6 + EXP8 0x 086: USER_DEFINED_8_BIT_DATA_TYPE_7 + EXP8 0x 087: USER_DEFINED_8_BIT_DATA_TYPE_8 + EXP8 0x09E: YUV422 8bit + VP 0x0A 0: RGB444 + EXP16 0x0A 1: RGB555 + EXP16 0x0AB: RAW10 + EXP16 0x0AC: RAW12 + EXP16 0x0AD: RAW14 + EXP16 0x0DE: Same as YUV422 8bit + VP but data is send as 16-bit wide words to video port. Could be used together with the GENERIC and BYTESWAP features 0x0E 3: RGB666 + EXP32 0x0E 4: RGB888 + EXP32 0x0E 8: RAW6 + DPCM10 + VP 0x12A: RAW8 + VP 0x12C: RAW12 + VP 0x12D: RAW14 + VP 0x12F: RAW10 + VP 0x 140: USER_DEFINED_8_BIT_DATA_TYPE_1_DPCM12_VP 0x 141: USER_DEFINED_8_BIT_DATA_TYPE_2_DPCM12_VP 0x 142: USER_DEFINED_8_BIT_DATA_TYPE_3_DPCM12_VP 0x 143: USER_DEFINED_8_BIT_DATA_TYPE_4_DPCM12_VP 0x 144: USER_DEFINED_8_BIT_DATA_TYPE_5_DPCM12_VP 0x 145: USER_DEFINED_8_BIT_DATA_TYPE_6_DPCM12_VP 0x 146: USER_DEFINED_8_BIT_DATA_TYPE_7_DPCM12_VP 0x 147: USER_DEFINED_8_BIT_DATA_TYPE_8_DPCM12_VP 0x1C 0: USER_DEFINED_8_BIT_DATA_TYPE_1_DPCM12_EXP16 0x1C 1: USER_DEFINED_8_BIT_DATA_TYPE_2_DPCM12_EXP16 0x1C 2: USER_DEFINED_8_BIT_DATA_TYPE_3_DPCM12_EXP16 0x1C 3: USER_DEFINED_8_BIT_DATA_TYPE_4_DPCM12_EXP16 0x1C 4: USER_DEFINED_8_BIT_DATA_TYPE_5_DPCM12_EXP16 0x1C 5: USER_DEFINED_8_BIT_DATA_TYPE_6_DPCM12_EXP16 0x1C 6: USER_DEFINED_8_BIT_DATA_TYPE_7_DPCM12_EXP16 0x1C 7: USER_DEFINED_8_BIT_DATA_TYPE_8_DPCM12_EXP16 0x 229: RAW7 + DPCM10 + EXP16 0x2A 8: RAW6 + DPCM10 + EXP16 0x2AA: RAW8 + DPCM10 + EXP16 0x2C

Copyright © 2025 Texas Instruments Incorporated

Table 11-1493. CSI2_CTX5_CTRL2 Register Field Descriptions (continued)

Bit	Field	Type	Reset	Description
				0: USER_DEFINED_8_BIT_DATA_TYPE_1 + DPCM10 + EXP16 0x2C 1: USER_DEFINED_8_BIT_DATA_TYPE_2 + DPCM10 + EXP16 0x2C 2: USER_DEFINED_8_BIT_DATA_TYPE_3 + DPCM10 + EXP16 0x2C 3: USER_DEFINED_8_BIT_DATA_TYPE_4 + DPCM10 + EXP16 0x2C 4: USER_DEFINED_8_BIT_DATA_TYPE_5 + DPCM10 + EXP16 0x2C 5: USER_DEFINED_8_BIT_DATA_TYPE_6 + DPCM10 + EXP16 0x2C 6: USER_DEFINED_8_BIT_DATA_TYPE_7 + DPCM10 + EXP16 0x2C 7: USER_DEFINED_8_BIT_DATA_TYPE_8 + DPCM10 + EXP16 0x 329: RAW7 + DPCM10 + VP 0x32A: RAW8 + DPCM10 + VP 0x 340: USER_DEFINED_8_BIT_DATA_TYPE_1 + DPCM10 + VP 0x 341: USER_DEFINED_8_BIT_DATA_TYPE_2 + DPCM10 + VP 0x 342: USER_DEFINED_8_BIT_DATA_TYPE_3 + DPCM10 + VP 0x 343: USER_DEFINED_8_BIT_DATA_TYPE_4 + DPCM10 + VP 0x 344: USER_DEFINED_8_BIT_DATA_TYPE_5 + DPCM10 + VP 0x 345: USER_DEFINED_8_BIT_DATA_TYPE_6 + DPCM10 + VP 0x 346: USER_DEFINED_8_BIT_DATA_TYPE_7 + DPCM10 + VP 0x 347: USER_DEFINED_8_BIT_DATA_TYPE_8 + DPCM10 + VP 0x 368: RAW6 DPCM12 + VP 0x 369: RAW7 DPCM12 + EXP16 0x36A: RAW8 DPCM12 + EXP16 0x3A 8: RAW6 DPCM12 + EXP16 0x3A 9: RAW7 DPCM12 + VP 0x3AA: RAW8 DPCM12 + VP

Copyright © 2025 Texas Instruments Incorporated

11.6.1.1.3.5.2.60 CSI2_CTX5_DAT_OFST Register (Offset = 118h) [Reset = 00000000h]

CSI2_CTX5_DAT_OFST is shown in Table 11-1494.

Return to the Summary Table.

DATA MEM ADDRESS OFFSET REGISTER - Context This register sets the offset which is applied on the destination address after each line is written to memory. This register applies for both CSI2_CTX_DAT_PING_ADDR and CSI2_CTX_DAT_PONG_ADDR.

Table 11-1494. CSI2_CTX5_DAT_OFST Register Field Descriptions

Bit	Field	Type	Reset	Description
31-17	RES21	R	0h	RESERVE FIELD
16-5	OFST	R/W	0h	Line offset programmed in bytes (signed value 2's complement). If OFST = 0, the data is written contiguously in memory. Otherwise, OFST sets the destination offset between the first pixel of the previous line and the first pixel of the current line. Valid range: -2^{17} ~ (2^{17}-1)
4-0	RESERVED	R	0h	

Copyright © 2025 Texas Instruments Incorporated

11.6.1.1.3.5.2.61 CSI2_CTX5_DAT_PING_ADDR Register (Offset = 11Ch) [Reset = 00000000h]

CSI2_CTX5_DAT_PING_ADDR is shown in Table 11-1495.

Return to the Summary Table.

DATA MEM PING ADDRESS REGISTER - Context This register sets the 32-bit memory address where the pixel data are stored. The destination is double buffered: this register sets the PING address. Double buffering is enabled when the addresses

Table 11-1495. CSI2_CTX5_DAT_PING_ADDR Register Field Descriptions

Bit	Field	Type	Reset	Description
31-5	ADDR	R/W	0h	27 most significant bits of the 32-bit address.
4-0	RES	R	0h	RESERVE FIELD

Copyright © 2025 Texas Instruments Incorporated

11.6.1.1.3.5.2.62 CSI2_CTX5_DAT_PONG_ADDR Register (Offset = 120h) [Reset = 00000000h]

CSI2_CTX5_DAT_PONG_ADDR is shown in Table 11-1496.

Return to the Summary Table.

DATA MEM PONG ADDRESS REGISTER - Context This register sets the 32-bit memory address where the pixel data are stored. The destination is double buffered: this register sets the PONG address. Double buffering is enabled when the addresses

Table 11-1496. CSI2_CTX5_DAT_PONG_ADDR Register Field Descriptions

Bit	Field	Type	Reset	Description
31-5	ADDR	R/W	0h	27 most significant bits of the 32-bit address.
4-0	RES	R	0h	RESERVE FIELD

Copyright © 2025 Texas Instruments Incorporated

11.6.1.1.3.5.2.63 CSI2_CTX5_IRQENABLE Register (Offset = 124h) [Reset = 00000000h]

CSI2_CTX5_IRQENABLE is shown in Table 11-1497.

Return to the Summary Table.

INTERRUPT ENABLE REGISTER - Context This register regroups all the events related to Context.

Table 11-1497. CSI2_CTX5_IRQENABLE Register Field Descriptions

Bit	Field	Type	Reset	Description
31-9	RES22	R	0h	RESERVE FIELD
8	ECC_CORRECTION_IRQ	R/W	0h	Context - ECC has been used to correct the only 1-bit error (long packet only). 0: Event is masked 1: Event generates an interrupt when it occurs
7	LINE_NUMBER_IRQ	R/W	0h	Context - Line number is reached. 0: Event is masked 1: Event generates an interrupt when it occurs
6	FRAME_NUMBER_IRQ	R/W	0h	Context - Frame counter reached. 0: Event is masked 1: Event generates an interrupt when it occurs
5	CS_IRQ	R/W	0h	Context - Check-Sum of the payload mismatch detection 0: Event is masked 1: Event generates an interrupt when it occurs
4	RES23	R	0h	RESERVE FIELD
3	LE_IRQ	R/W	0h	Context - Line end sync code detection. 0: Event is masked 1: Event generates an interrupt when it occurs
2	LS_IRQ	R/W	0h	Context - Line start sync code detection. 0: Event is masked 1: Event generates an interrupt when it occurs
1	FE_IRQ	R/W	0h	Context - Frame end sync code detection. 0: Event is masked 1: Event generates an interrupt when it occurs
0	FS_IRQ	R/W	0h	Context - Frame start sync code detection. 0: Event is masked 1: Event generates an interrupt when it occurs

Copyright © 2025 Texas Instruments Incorporated

11.6.1.1.3.5.2.64 CSI2_CTX5_IRQSTATUS Register (Offset = 128h) [Reset = 00000000h]

CSI2_CTX5_IRQSTATUS is shown in Table 11-1498.

Return to the Summary Table.

INTERRUPT STATUS REGISTER - Context This register regroups all the events related to Context.

Table 11-1498. CSI2_CTX5_IRQSTATUS Register Field Descriptions

Bit	Field	Type	Reset	Description
31-9	RES24	R	0h	RESERVE FIELD
8	ECC_CORRECTION_IRQ	R/W	0h	Context - ECC has been used to do the correction of the only 1-bit error status (long packet only). 0: READS: Event is false. WRITES: Status bit unchanged. 1: READS: Event is true (pending). WRITES: Status bit is reset. . - (RW W1toClr)
7	LINE_NUMBER_IRQ	R/W	0h	Contexc - Line number reached status. 0: READS: Event is false. WRITES: Status bit unchanged. 1: READS: Event is true (pending). WRITES: Status bit is reset. - (RW W1toClr)
6	FRAME_NUMBER_IRQ	R/W	0h	Context - Frame counter reached status 0: READS: Event is false. WRITES: Status bit unchanged. 1: READS: Event is true (pending). WRITES: Status bit is reset. - (RW W1toClr)
5	CS_IRQ	R/W	0h	Context - Check-Sum mismatch status. 0: READS: Event is false. WRITES: Status bit unchanged. 1: READS: Event is true (pending). WRITES: Status bit is reset. - (RW W1toClr)
4	RES25	R	0h	RESERVE FIELD
3	LE_IRQ	R/W	0h	Context - Line end sync code detection status. 0: READS: Event is false. WRITES: Status bit unchanged. 1: READS: Event is true (pending). WRITES: Status bit is reset. . - (RW W1toClr)
2	LS_IRQ	R/W	0h	Context - Line start sync code detection status. 0: READS: Event is false. WRITES: Status bit unchanged. 1: READS: Event is true (pending). WRITES: Status bit is reset. - (RW W1toClr)
1	FE_IRQ	R/W	0h	Context - Frame end sync code detection status. 0: READS: Event is false. WRITES: Status bit unchanged. 1: READS: Event is true (pending). WRITES: Status bit is reset. - (RW W1toClr)
0	FS_IRQ	R/W	0h	Context - Frame start sync code detection status. 0: READS: Event is false. WRITES: Status bit unchanged. 1: READS: Event is true (pending). WRITES: Status bit is reset. - (RW W1toClr)

Copyright © 2025 Texas Instruments Incorporated

11.6.1.1.3.5.2.65 CSI2_CTX5_CTRL3 Register (Offset = 12Ch) [Reset = 00000000h]

CSI2_CTX5_CTRL3 is shown in Table 11-1499.

Return to the Summary Table.

CONTROL REGISTER - Context This register controls the Context. This register is shadowed: modifications are taken into account after the next FSC sync code.

Table 11-1499. CSI2_CTX5_CTRL3 Register Field Descriptions

Bit	Field	Type	Reset	Description
31-30	RESERVED	R	0h	Reserved
29-16	ALPHA	R/W	0h	When TRANSCODE=0 Alpha value for RGB888, RGB666 and RBG444. When TRANSCODE=1 and BYS=1 Image width, in pixels, acquired from the BYS port.
15-0	LINE_NUMBER	R/W	0h	Line number for the interrupt generation

Copyright © 2025 Texas Instruments Incorporated

11.6.1.1.3.5.2.66 CSI2_CTX6_CTRL1 Register (Offset = 130h) [Reset = 00010008h]

CSI2_CTX6_CTRL1 is shown in Table 11-1500.

Return to the Summary Table.

CONTROL REGISTER - Context This register controls the Context. This register is shadowed: modifications are taken into account after the next FSC sync code.

Table 11-1500. CSI2_CTX6_CTRL1 Register Field Descriptions

Bit	Field	Type	Reset	Description
31	BYTESWAP	R/W	0h	Allows swapping bytes two by two in the payload data. It doesn't affect - short packets - long packet header or footers - CRC calculation The purpose is to by swap data send to the OCP port and/or video port 0: Disabled 1: Enabled
30	GENERIC	R/W	0h	Enables the generic mode. 0: Disabled. Data is received according to CSI2_CTX_CTRL1.FORMAT and the long packet code transmitted in the MIPI stream is used. 1: Enabled. Data is received according to CSI2_CTX_CTRL1.FORMAT and the long packet code transmitted in the MIPI stream is ignored.
29	RES19	R	0h	RESERVE FIELD
28	HSCALE	R/W	0h	Enable horizontal downscaling by a factor of two. Applies to RAW data when transcoding is enabled. Must be disabled when transcoding is disabled. 0: Disable 1: Enable
27-24	TRANSCODE	R/W	0h	Enables image transcoding. When this features is enabled: - the data format from the camera is defined by the FORMAT register - the format after transcode is defined by the TRANSCODE register. The memory storage / video port formats is defined by the TRANSCODE register 0x 0: Feature disabled. 0x 1: Outputs DPCM compressed RAW10 data. After compression, pixels are coded on 8 bits. Data in memory is organized as regular RAW8 data 0x 2: Outputs DPCM compressed RAW12 data. After compression, pixels are coded on 8 bits. Data in memory is organized as regular RAW8 data 0x 3: Outputs ALAW compressed RAW10 data. After compression, pixels are coded on 8 bits. Data in memory is organized as regular RAW8 data. 0x 4: Outputs uncompressed RAW8 data. Data in memory is organized as regular RAW8 data 0x 5: Outputs uncompressed RAW10 data. Data in memory is organized as regular RAW10+EXP16 data 0x 6: Outputs uncompressed RAW10 data. Data in memory is organized as regular packed RAW10 data 0x 7: Outputs uncompressed RAW12 data. Data in memory is organized as regular RAW12+EXP16 data 0x 8: Outputs uncompressed RAW12 data. Data in memory is organized as regular packed RAW12 data 0x 9: Outputs uncompressed RAW14 data.
23-16	FEC_NUMBER	R/W	1h	Number of FEC to receive between using swap of CSI2_CTX_DAT_PING_ADDR and CSI2_CTX_DAT_PONG_ADDR for the calculation of the address in memory. (shall be used only in interlace mode, otherwise set to '1')

Copyright © 2025 Texas Instruments Incorporated

Table 11-1500. CSI2_CTX6_CTRL1 Register Field Descriptions (continued)

Bit	Field	Type	Reset	Description
15-8	COUNT	R/W	0h	Sets the number of frame to acquire. Once the frame acquisition starts, the COUNT value is decremented after every frame. When COUNT reaches 0, the FRAME_NUMBER_IRQ interrupt is triggered and CTX_EN is set to '0'. Writes to this bit field are controlled by the COUNT_UNLOCK bit. During the same OCP write access , the bit-field COUNT_UNLOCK shall be written in addition to COUNT bit-field in order to change the COUNT value. COUNT can be overwritten dynamically with a new count value." 0: Infinite number of frames (no count). 1: 1 frame to acquire ... 255: 255 frames to acquire.
7	EOF_EN	R/W	0h	Indicates if the end of frame signal shall be asserted at the end of the frame Read 0: The end of frame signal is not asserted at the end of each frame. Read 1: The end of frame signal is asserted at the end of each frame.
6	EOL_EN	R/W	0h	Indicates if the end of line signal shall be asserted at the end of the line. Read 0: The end of line signal is not asserted at the end of each frame. Read 1: The end of line signal is asserted at the end of each frame.
5	CS_EN	R/W	0h	Enables the checksum check for the received payload (long packet only). 0: Disabled 1: Enabled
4	COUNT_UNLOCK	W	0h	Unlock writes to the COUNT bit field. Write 0: COUNT bit field is locked. Writes have no effect Write 1: COUNT bit field is unlocked. Writes are possible.
3	PING_PONG	R	1h	Indicates whether the PING or PONG destination address (CSI2_CTX_DAT_PING_ADDR or CSI2_CTX_DAT_PONG_ADDR) was used to write the last frame. This bit field toggles after every FEC_NUMBER FEC sync code received for the current context. Read 0: PING buffer Read 1: PONG buffer
2	VP_FORCE	R/W	0h	RESERVE FIELD
1	LINE_MODULO	R/W	0h	Line modulo configuration 0: CSI2_CTX_CTRL3.LINE_NUMBER is used once per frame for the generation of the LINE_NUMBER_IRQ. 1: CSI2_CTX_CTRL3.LINE_NUMBER is used as a modulo number for the generation of the LINE_NUMBER_IRQ (multiple times the interrupt can be generated for each frame)
0	CTX_EN	R/W	0h	Enables the Context 0: Disabled 1: Enabled

Copyright © 2025 Texas Instruments Incorporated

11.6.1.1.3.5.2.67 CSI2_CTX6_CTRL2 Register (Offset = 134h) [Reset = 00000000h]

CSI2_CTX6_CTRL2 is shown in Table 11-1501.

Return to the Summary Table.

CONTROL REGISTER - Context This register controls the Context. This register is shadowed: modifications are taken into account after the next FSC sync code (except for VIRTUAL_ID and FORMAT fields). The change of VIRTUIAL_ID and FORMAT ha

Table 11-1501. CSI2_CTX6_CTRL2 Register Field Descriptions

Bit	Field	Type	Reset	Description
31-16	FRAME	R	0h	Frame number. The CSI-2 protocol engine extracts the frame number from the SOF short packet sent by the camera.
15	RES20	R	0h	RESERVE FIELD
14-13	USER_DEF_MAPPING	R/W	0h	Selects the pixel format of USER_DEFINED in FORMAT 0x 0: RAW6 0x 1: RAW7 0x 2: RAW8 (not valid if FORMAT is USER_DEFINED_8_BIT_DATA_TYPE_x_EXP8 with x from 1 to 8)
12-11	VIRTUAL_ID	R/W	0h	Virtual channel ID 0x 0: Virtual Channel ID 0 0x 1: Virtual Channel ID 1 0x 2: Virtual Channel ID 2 0x 3: Virtual Channel ID 3
10	DPCM_PRED	R/W	0h	Selects the DPCM predictor. 0: The advanced predictor is used. Not supported for 10 – 8 – 10 algorithm. Performance limited to 1 pixel/cycle. 1: The simple predictor is used.

Copyright © 2025 Texas Instruments Incorporated

Table 11-1501. CSI2_CTX6_CTRL2 Register Field Descriptions (continued)

Bit	Field	Type	Reset	Description
9-0	FORMAT	R/W	0h	Data format selection. 0x 000: OTHERS (except NULL and BLANKING packets) 0x 012: Embedded 8-bit non-image data (e.g. JPEG) 0x 018: YUV420 8bit 0x 019: YUV420 10bit 0x01A: YUV420 8bit legacy 0x01C: YUV420 8bit + CSPS 0x01D: YUV420 10bit + CSPS 0x01E: YUV422 8bit 0x01F: YUV422 10bit 0x 022: RGB565 0x 024: RGB888 0x 028: RAW6 0x 029: RAW7 0x02A: RAW8 0x02B: RAW10 0x02C: RAW12 0x02D: RAW14 0x 033: RGB666 + EXP32_24 0x 040: USER_DEFINED_8_BIT_DATA_TYPE_1 0x 041: USER_DEFINED_8_BIT_DATA_TYPE_2 0x 042: USER_DEFINED_8_BIT_DATA_TYPE_3 0x 043: USER_DEFINED_8_BIT_DATA_TYPE_4 0x 044: USER_DEFINED_8_BIT_DATA_TYPE_5 0x 045: USER_DEFINED_8_BIT_DATA_TYPE_6 0x 046: USER_DEFINED_8_BIT_DATA_TYPE_7 0x 047: USER_DEFINED_8_BIT_DATA_TYPE_8 0x 068: RAW6 + EXP8 0x 069: RAW7 + EXP8 0x 080: USER_DEFINED_8_BIT_DATA_TYPE_1 + EXP8 0x 081: USER_DEFINED_8_BIT_DATA_TYPE_2 + EXP8 0x 082: USER_DEFINED_8_BIT_DATA_TYPE_3 + EXP8 0x 083: USER_DEFINED_8_BIT_DATA_TYPE_4 + EXP8 0x 084: USER_DEFINED_8_BIT_DATA_TYPE_5 + EXP8 0x 085: USER_DEFINED_8_BIT_DATA_TYPE_6 + EXP8 0x 086: USER_DEFINED_8_BIT_DATA_TYPE_7 + EXP8 0x 087: USER_DEFINED_8_BIT_DATA_TYPE_8 + EXP8 0x09E: YUV422 8bit + VP 0x0A 0: RGB444 + EXP16 0x0A 1: RGB555 + EXP16 0x0AB: RAW10 + EXP16 0x0AC: RAW12 + EXP16 0x0AD: RAW14 + EXP16 0x0DE: Same as YUV422 8bit + VP but data is send as 16-bit wide words to video port. Could be used together with the GENERIC and BYTESWAP features 0x0E 3: RGB666 + EXP32 0x0E 4: RGB888 + EXP32 0x0E 8: RAW6 + DPCM10 + VP 0x12A: RAW8 + VP 0x12C: RAW12 + VP 0x12D: RAW14 + VP 0x12F: RAW10 + VP 0x 140: USER_DEFINED_8_BIT_DATA_TYPE_1_DPCM12_VP 0x 141: USER_DEFINED_8_BIT_DATA_TYPE_2_DPCM12_VP 0x 142: USER_DEFINED_8_BIT_DATA_TYPE_3_DPCM12_VP 0x 143: USER_DEFINED_8_BIT_DATA_TYPE_4_DPCM12_VP 0x 144: USER_DEFINED_8_BIT_DATA_TYPE_5_DPCM12_VP 0x 145: USER_DEFINED_8_BIT_DATA_TYPE_6_DPCM12_VP 0x 146: USER_DEFINED_8_BIT_DATA_TYPE_7_DPCM12_VP 0x 147: USER_DEFINED_8_BIT_DATA_TYPE_8_DPCM12_VP 0x1C 0: USER_DEFINED_8_BIT_DATA_TYPE_1_DPCM12_EXP16 0x1C 1: USER_DEFINED_8_BIT_DATA_TYPE_2_DPCM12_EXP16 0x1C 2: USER_DEFINED_8_BIT_DATA_TYPE_3_DPCM12_EXP16 0x1C 3: USER_DEFINED_8_BIT_DATA_TYPE_4_DPCM12_EXP16 0x1C 4: USER_DEFINED_8_BIT_DATA_TYPE_5_DPCM12_EXP16 0x1C 5: USER_DEFINED_8_BIT_DATA_TYPE_6_DPCM12_EXP16 0x1C 6: USER_DEFINED_8_BIT_DATA_TYPE_7_DPCM12_EXP16 0x1C 7: USER_DEFINED_8_BIT_DATA_TYPE_8_DPCM12_EXP16 0x 229: RAW7 + DPCM10 + EXP16 0x2A 8: RAW6 + DPCM10 + EXP16 0x2AA: RAW8 + DPCM10 + EXP16 0x2C

Copyright © 2025 Texas Instruments Incorporated

Table 11-1501. CSI2_CTX6_CTRL2 Register Field Descriptions (continued)

Bit	Field	Type	Reset	Description
				0: USER_DEFINED_8_BIT_DATA_TYPE_1 + DPCM10 + EXP16 0x2C 1: USER_DEFINED_8_BIT_DATA_TYPE_2 + DPCM10 + EXP16 0x2C 2: USER_DEFINED_8_BIT_DATA_TYPE_3 + DPCM10 + EXP16 0x2C 3: USER_DEFINED_8_BIT_DATA_TYPE_4 + DPCM10 + EXP16 0x2C 4: USER_DEFINED_8_BIT_DATA_TYPE_5 + DPCM10 + EXP16 0x2C 5: USER_DEFINED_8_BIT_DATA_TYPE_6 + DPCM10 + EXP16 0x2C 6: USER_DEFINED_8_BIT_DATA_TYPE_7 + DPCM10 + EXP16 0x2C 7: USER_DEFINED_8_BIT_DATA_TYPE_8 + DPCM10 + EXP16 0x 329: RAW7 + DPCM10 + VP 0x32A: RAW8 + DPCM10 + VP 0x 340: USER_DEFINED_8_BIT_DATA_TYPE_1 + DPCM10 + VP 0x 341: USER_DEFINED_8_BIT_DATA_TYPE_2 + DPCM10 + VP 0x 342: USER_DEFINED_8_BIT_DATA_TYPE_3 + DPCM10 + VP 0x 343: USER_DEFINED_8_BIT_DATA_TYPE_4 + DPCM10 + VP 0x 344: USER_DEFINED_8_BIT_DATA_TYPE_5 + DPCM10 + VP 0x 345: USER_DEFINED_8_BIT_DATA_TYPE_6 + DPCM10 + VP 0x 346: USER_DEFINED_8_BIT_DATA_TYPE_7 + DPCM10 + VP 0x 347: USER_DEFINED_8_BIT_DATA_TYPE_8 + DPCM10 + VP 0x 368: RAW6 DPCM12 + VP 0x 369: RAW7 DPCM12 + EXP16 0x36A: RAW8 DPCM12 + EXP16 0x3A 8: RAW6 DPCM12 + EXP16 0x3A 9: RAW7 DPCM12 + VP 0x3AA: RAW8 DPCM12 + VP

Copyright © 2025 Texas Instruments Incorporated

11.6.1.1.3.5.2.68 CSI2_CTX6_DAT_OFST Register (Offset = 138h) [Reset = 00000000h]

CSI2_CTX6_DAT_OFST is shown in Table 11-1502.

Return to the Summary Table.

DATA MEM ADDRESS OFFSET REGISTER - Context This register sets the offset which is applied on the destination address after each line is written to memory. This register applies for both CSI2_CTX_DAT_PING_ADDR and CSI2_CTX_DAT_PONG_ADDR.

Table 11-1502. CSI2_CTX6_DAT_OFST Register Field Descriptions

Bit	Field	Type	Reset	Description
31-17	RES21	R	0h	RESERVE FIELD
16-5	OFST	R/W	0h	Line offset programmed in bytes (signed value 2's complement). If OFST = 0, the data is written contiguously in memory. Otherwise, OFST sets the destination offset between the first pixel of the previous line and the first pixel of the current line. Valid range: -2^{17} ~ (2^{17}-1)
4-0	RESERVED	R	0h	

Copyright © 2025 Texas Instruments Incorporated

11.6.1.1.3.5.2.69 CSI2_CTX6_DAT_PING_ADDR Register (Offset = 13Ch) [Reset = 00000000h]

CSI2_CTX6_DAT_PING_ADDR is shown in Table 11-1503.

Return to the Summary Table.

DATA MEM PING ADDRESS REGISTER - Context This register sets the 32-bit memory address where the pixel data are stored. The destination is double buffered: this register sets the PING address. Double buffering is enabled when the addresses

Table 11-1503. CSI2_CTX6_DAT_PING_ADDR Register Field Descriptions

Bit	Field	Type	Reset	Description
31-5	ADDR	R/W	0h	27 most significant bits of the 32-bit address.
4-0	RES	R	0h	RESERVE FIELD

Copyright © 2025 Texas Instruments Incorporated

11.6.1.1.3.5.2.70 CSI2_CTX6_DAT_PONG_ADDR Register (Offset = 140h) [Reset = 00000000h]

CSI2_CTX6_DAT_PONG_ADDR is shown in Table 11-1504.

Return to the Summary Table.

DATA MEM PONG ADDRESS REGISTER - Context This register sets the 32-bit memory address where the pixel data are stored. The destination is double buffered: this register sets the PONG address. Double buffering is enabled when the addresses

Table 11-1504. CSI2_CTX6_DAT_PONG_ADDR Register Field Descriptions

Bit	Field	Type	Reset	Description
31-5	ADDR	R/W	0h	27 most significant bits of the 32-bit address.
4-0	RES	R	0h	RESERVE FIELD

Copyright © 2025 Texas Instruments Incorporated

11.6.1.1.3.5.2.71 CSI2_CTX6_IRQENABLE Register (Offset = 144h) [Reset = 00000000h]

CSI2_CTX6_IRQENABLE is shown in Table 11-1505.

Return to the Summary Table.

INTERRUPT ENABLE REGISTER - Context This register regroups all the events related to Context.

Table 11-1505. CSI2_CTX6_IRQENABLE Register Field Descriptions

Bit	Field	Type	Reset	Description
31-9	RES22	R	0h	RESERVE FIELD
8	ECC_CORRECTION_IRQ	R/W	0h	Context - ECC has been used to correct the only 1-bit error (long packet only). 0: Event is masked 1: Event generates an interrupt when it occurs
7	LINE_NUMBER_IRQ	R/W	0h	Context - Line number is reached. 0: Event is masked 1: Event generates an interrupt when it occurs
6	FRAME_NUMBER_IRQ	R/W	0h	Context - Frame counter reached. 0: Event is masked 1: Event generates an interrupt when it occurs
5	CS_IRQ	R/W	0h	Context - Check-Sum of the payload mismatch detection 0: Event is masked 1: Event generates an interrupt when it occurs
4	RES23	R	0h	RESERVE FIELD
3	LE_IRQ	R/W	0h	Context - Line end sync code detection. 0: Event is masked 1: Event generates an interrupt when it occurs
2	LS_IRQ	R/W	0h	Context - Line start sync code detection. 0: Event is masked 1: Event generates an interrupt when it occurs
1	FE_IRQ	R/W	0h	Context - Frame end sync code detection. 0: Event is masked 1: Event generates an interrupt when it occurs
0	FS_IRQ	R/W	0h	Context - Frame start sync code detection. 0: Event is masked 1: Event generates an interrupt when it occurs

Copyright © 2025 Texas Instruments Incorporated

11.6.1.1.3.5.2.72 CSI2_CTX6_IRQSTATUS Register (Offset = 148h) [Reset = 00000000h]

CSI2_CTX6_IRQSTATUS is shown in Table 11-1506.

Return to the Summary Table.

INTERRUPT STATUS REGISTER - Context This register regroups all the events related to Context.

Table 11-1506. CSI2_CTX6_IRQSTATUS Register Field Descriptions

Bit	Field	Type	Reset	Description
31-9	RES24	R	0h	RESERVE FIELD
8	ECC_CORRECTION_IRQ	R/W	0h	Context - ECC has been used to do the correction of the only 1-bit error status (long packet only). 0: READS: Event is false. WRITES: Status bit unchanged. 1: READS: Event is true (pending). WRITES: Status bit is reset. . - (RW W1toClr)
7	LINE_NUMBER_IRQ	R/W	0h	Contexc - Line number reached status. 0: READS: Event is false. WRITES: Status bit unchanged. 1: READS: Event is true (pending). WRITES: Status bit is reset. - (RW W1toClr)
6	FRAME_NUMBER_IRQ	R/W	0h	Context - Frame counter reached status 0: READS: Event is false. WRITES: Status bit unchanged. 1: READS: Event is true (pending). WRITES: Status bit is reset. - (RW W1toClr)
5	CS_IRQ	R/W	0h	Context - Check-Sum mismatch status. 0: READS: Event is false. WRITES: Status bit unchanged. 1: READS: Event is true (pending). WRITES: Status bit is reset. - (RW W1toClr)
4	RES25	R	0h	RESERVE FIELD
3	LE_IRQ	R/W	0h	Context - Line end sync code detection status. 0: READS: Event is false. WRITES: Status bit unchanged. 1: READS: Event is true (pending). WRITES: Status bit is reset. . - (RW W1toClr)
2	LS_IRQ	R/W	0h	Context - Line start sync code detection status. 0: READS: Event is false. WRITES: Status bit unchanged. 1: READS: Event is true (pending). WRITES: Status bit is reset. - (RW W1toClr)
1	FE_IRQ	R/W	0h	Context - Frame end sync code detection status. 0: READS: Event is false. WRITES: Status bit unchanged. 1: READS: Event is true (pending). WRITES: Status bit is reset. - (RW W1toClr)
0	FS_IRQ	R/W	0h	Context - Frame start sync code detection status. 0: READS: Event is false. WRITES: Status bit unchanged. 1: READS: Event is true (pending). WRITES: Status bit is reset. - (RW W1toClr)

Copyright © 2025 Texas Instruments Incorporated

11.6.1.1.3.5.2.73 CSI2_CTX6_CTRL3 Register (Offset = 14Ch) [Reset = 00000000h]

CSI2_CTX6_CTRL3 is shown in Table 11-1507.

Return to the Summary Table.

CONTROL REGISTER - Context This register controls the Context. This register is shadowed: modifications are taken into account after the next FSC sync code.

Table 11-1507. CSI2_CTX6_CTRL3 Register Field Descriptions

Bit	Field	Type	Reset	Description
31-30	RESERVED	R	0h	Reserved
29-16	ALPHA	R/W	0h	When TRANSCODE=0 Alpha value for RGB888, RGB666 and RBG444. When TRANSCODE=1 and BYS=1 Image width, in pixels, acquired from the BYS port.
15-0	LINE_NUMBER	R/W	0h	Line number for the interrupt generation

Copyright © 2025 Texas Instruments Incorporated

11.6.1.1.3.5.2.74 CSI2_CTX7_CTRL1 Register (Offset = 150h) [Reset = 00010008h]

CSI2_CTX7_CTRL1 is shown in Table 11-1508.

Return to the Summary Table.

CONTROL REGISTER - Context This register controls the Context. This register is shadowed: modifications are taken into account after the next FSC sync code.

Table 11-1508. CSI2_CTX7_CTRL1 Register Field Descriptions

Bit	Field	Type	Reset	Description
31	BYTESWAP	R/W	0h	Allows swapping bytes two by two in the payload data. It doesn't affect - short packets - long packet header or footers - CRC calculation The purpose is to by swap data send to the OCP port and/or video port 0: Disabled 1: Enabled
30	GENERIC	R/W	0h	Enables the generic mode. 0: Disabled. Data is received according to CSI2_CTX_CTRL1.FORMAT and the long packet code transmitted in the MIPI stream is used. 1: Enabled. Data is received according to CSI2_CTX_CTRL1.FORMAT and the long packet code transmitted in the MIPI stream is ignored.
29	RES19	R	0h	RESERVE FIELD
28	HSCALE	R/W	0h	Enable horizontal downscaling by a factor of two. Applies to RAW data when transcoding is enabled. Must be disabled when transcoding is disabled. 0: Disable 1: Enable
27-24	TRANSCODE	R/W	0h	Enables image transcoding. When this features is enabled: - the data format from the camera is defined by the FORMAT register - the format after transcode is defined by the TRANSCODE register. The memory storage / video port formats is defined by the TRANSCODE register 0x 0: Feature disabled. 0x 1: Outputs DPCM compressed RAW10 data. After compression, pixels are coded on 8 bits. Data in memory is organized as regular RAW8 data 0x 2: Outputs DPCM compressed RAW12 data. After compression, pixels are coded on 8 bits. Data in memory is organized as regular RAW8 data 0x 3: Outputs ALAW compressed RAW10 data. After compression, pixels are coded on 8 bits. Data in memory is organized as regular RAW8 data. 0x 4: Outputs uncompressed RAW8 data. Data in memory is organized as regular RAW8 data 0x 5: Outputs uncompressed RAW10 data. Data in memory is organized as regular RAW10+EXP16 data 0x 6: Outputs uncompressed RAW10 data. Data in memory is organized as regular packed RAW10 data 0x 7: Outputs uncompressed RAW12 data. Data in memory is organized as regular RAW12+EXP16 data 0x 8: Outputs uncompressed RAW12 data. Data in memory is organized as regular packed RAW12 data 0x 9: Outputs uncompressed RAW14 data.
23-16	FEC_NUMBER	R/W	1h	Number of FEC to receive between using swap of CSI2_CTX_DAT_PING_ADDR and CSI2_CTX_DAT_PONG_ADDR for the calculation of the address in memory. (shall be used only in interlace mode, otherwise set to '1')

Copyright © 2025 Texas Instruments Incorporated

Table 11-1508. CSI2_CTX7_CTRL1 Register Field Descriptions (continued)

Bit	Field	Type	Reset	Description
15-8	COUNT	R/W	0h	Sets the number of frame to acquire. Once the frame acquisition starts, the COUNT value is decremented after every frame. When COUNT reaches 0, the FRAME_NUMBER_IRQ interrupt is triggered and CTX_EN is set to '0'. Writes to this bit field are controlled by the COUNT_UNLOCK bit. During the same OCP write access , the bit-field COUNT_UNLOCK shall be written in addition to COUNT bit-field in order to change the COUNT value. COUNT can be overwritten dynamically with a new count value." 0: Infinite number of frames (no count). 1: 1 frame to acquire ... 255: 255 frames to acquire.
7	EOF_EN	R/W	0h	Indicates if the end of frame signal shall be asserted at the end of the frame Read 0: The end of frame signal is not asserted at the end of each frame. Read 1: The end of frame signal is asserted at the end of each frame.
6	EOL_EN	R/W	0h	Indicates if the end of line signal shall be asserted at the end of the line. Read 0: The end of line signal is not asserted at the end of each frame. Read 1: The end of line signal is asserted at the end of each frame.
5	CS_EN	R/W	0h	Enables the checksum check for the received payload (long packet only). 0: Disabled 1: Enabled
4	COUNT_UNLOCK	W	0h	Unlock writes to the COUNT bit field. Write 0: COUNT bit field is locked. Writes have no effect Write 1: COUNT bit field is unlocked. Writes are possible.
3	PING_PONG	R	1h	Indicates whether the PING or PONG destination address (CSI2_CTX_DAT_PING_ADDR or CSI2_CTX_DAT_PONG_ADDR) was used to write the last frame. This bit field toggles after every FEC_NUMBER FEC sync code received for the current context. Read 0: PING buffer Read 1: PONG buffer
2	VP_FORCE	R/W	0h	RESERVE FIELD
1	LINE_MODULO	R/W	0h	Line modulo configuration 0: CSI2_CTX_CTRL3.LINE_NUMBER is used once per frame for the generation of the LINE_NUMBER_IRQ. 1: CSI2_CTX_CTRL3.LINE_NUMBER is used as a modulo number for the generation of the LINE_NUMBER_IRQ (multiple times the interrupt can be generated for each frame)
0	CTX_EN	R/W	0h	Enables the Context 0: Disabled 1: Enabled

Copyright © 2025 Texas Instruments Incorporated

11.6.1.1.3.5.2.75 CSI2_CTX7_CTRL2 Register (Offset = 154h) [Reset = 00000000h]

CSI2_CTX7_CTRL2 is shown in Table 11-1509.

Return to the Summary Table.

CONTROL REGISTER - Context This register controls the Context. This register is shadowed: modifications are taken into account after the next FSC sync code (except for VIRTUAL_ID and FORMAT fields). The change of VIRTUIAL_ID and FORMAT ha

Table 11-1509. CSI2_CTX7_CTRL2 Register Field Descriptions

Bit	Field	Type	Reset	Description
31-16	FRAME	R	0h	Frame number. The CSI-2 protocol engine extracts the frame number from the SOF short packet sent by the camera.
15	RES20	R	0h	RESERVE FIELD
14-13	USER_DEF_MAPPING	R/W	0h	Selects the pixel format of USER_DEFINED in FORMAT 0x 0: RAW6 0x 1: RAW7 0x 2: RAW8 (not valid if FORMAT is USER_DEFINED_8_BIT_DATA_TYPE_x_EXP8 with x from 1 to 8)
12-11	VIRTUAL_ID	R/W	0h	Virtual channel ID 0x 0: Virtual Channel ID 0 0x 1: Virtual Channel ID 1 0x 2: Virtual Channel ID 2 0x 3: Virtual Channel ID 3
10	DPCM_PRED	R/W	0h	Selects the DPCM predictor. 0: The advanced predictor is used. Not supported for 10 – 8 – 10 algorithm. Performance limited to 1 pixel/cycle. 1: The simple predictor is used.

Copyright © 2025 Texas Instruments Incorporated

Table 11-1509. CSI2_CTX7_CTRL2 Register Field Descriptions (continued)

Bit	Field	Type	Reset	Description
9-0	FORMAT	R/W	0h	Data format selection. 0x 000: OTHERS (except NULL and BLANKING packets) 0x 012: Embedded 8-bit non-image data (e.g. JPEG) 0x 018: YUV420 8bit 0x 019: YUV420 10bit 0x01A: YUV420 8bit legacy 0x01C: YUV420 8bit + CSPS 0x01D: YUV420 10bit + CSPS 0x01E: YUV422 8bit 0x01F: YUV422 10bit 0x 022: RGB565 0x 024: RGB888 0x 028: RAW6 0x 029: RAW7 0x02A: RAW8 0x02B: RAW10 0x02C: RAW12 0x02D: RAW14 0x 033: RGB666 + EXP32_24 0x 040: USER_DEFINED_8_BIT_DATA_TYPE_1 0x 041: USER_DEFINED_8_BIT_DATA_TYPE_2 0x 042: USER_DEFINED_8_BIT_DATA_TYPE_3 0x 043: USER_DEFINED_8_BIT_DATA_TYPE_4 0x 044: USER_DEFINED_8_BIT_DATA_TYPE_5 0x 045: USER_DEFINED_8_BIT_DATA_TYPE_6 0x 046: USER_DEFINED_8_BIT_DATA_TYPE_7 0x 047: USER_DEFINED_8_BIT_DATA_TYPE_8 0x 068: RAW6 + EXP8 0x 069: RAW7 + EXP8 0x 080: USER_DEFINED_8_BIT_DATA_TYPE_1 + EXP8 0x 081: USER_DEFINED_8_BIT_DATA_TYPE_2 + EXP8 0x 082: USER_DEFINED_8_BIT_DATA_TYPE_3 + EXP8 0x 083: USER_DEFINED_8_BIT_DATA_TYPE_4 + EXP8 0x 084: USER_DEFINED_8_BIT_DATA_TYPE_5 + EXP8 0x 085: USER_DEFINED_8_BIT_DATA_TYPE_6 + EXP8 0x 086: USER_DEFINED_8_BIT_DATA_TYPE_7 + EXP8 0x 087: USER_DEFINED_8_BIT_DATA_TYPE_8 + EXP8 0x09E: YUV422 8bit + VP 0x0A 0: RGB444 + EXP16 0x0A 1: RGB555 + EXP16 0x0AB: RAW10 + EXP16 0x0AC: RAW12 + EXP16 0x0AD: RAW14 + EXP16 0x0DE: Same as YUV422 8bit + VP but data is send as 16-bit wide words to video port. Could be used together with the GENERIC and BYTESWAP features 0x0E 3: RGB666 + EXP32 0x0E 4: RGB888 + EXP32 0x0E 8: RAW6 + DPCM10 + VP 0x12A: RAW8 + VP 0x12C: RAW12 + VP 0x12D: RAW14 + VP 0x12F: RAW10 + VP 0x 140: USER_DEFINED_8_BIT_DATA_TYPE_1_DPCM12_VP 0x 141: USER_DEFINED_8_BIT_DATA_TYPE_2_DPCM12_VP 0x 142: USER_DEFINED_8_BIT_DATA_TYPE_3_DPCM12_VP 0x 143: USER_DEFINED_8_BIT_DATA_TYPE_4_DPCM12_VP 0x 144: USER_DEFINED_8_BIT_DATA_TYPE_5_DPCM12_VP 0x 145: USER_DEFINED_8_BIT_DATA_TYPE_6_DPCM12_VP 0x 146: USER_DEFINED_8_BIT_DATA_TYPE_7_DPCM12_VP 0x 147: USER_DEFINED_8_BIT_DATA_TYPE_8_DPCM12_VP 0x1C 0: USER_DEFINED_8_BIT_DATA_TYPE_1_DPCM12_EXP16 0x1C 1: USER_DEFINED_8_BIT_DATA_TYPE_2_DPCM12_EXP16 0x1C 2: USER_DEFINED_8_BIT_DATA_TYPE_3_DPCM12_EXP16 0x1C 3: USER_DEFINED_8_BIT_DATA_TYPE_4_DPCM12_EXP16 0x1C 4: USER_DEFINED_8_BIT_DATA_TYPE_5_DPCM12_EXP16 0x1C 5: USER_DEFINED_8_BIT_DATA_TYPE_6_DPCM12_EXP16 0x1C 6: USER_DEFINED_8_BIT_DATA_TYPE_7_DPCM12_EXP16 0x1C 7: USER_DEFINED_8_BIT_DATA_TYPE_8_DPCM12_EXP16 0x 229: RAW7 + DPCM10 + EXP16 0x2A 8: RAW6 + DPCM10 + EXP16 0x2AA: RAW8 + DPCM10 + EXP16 0x2C

Copyright © 2025 Texas Instruments Incorporated

Table 11-1509. CSI2_CTX7_CTRL2 Register Field Descriptions (continued)

Bit	Field	Type	Reset	Description
				0: USER_DEFINED_8_BIT_DATA_TYPE_1 + DPCM10 + EXP16 0x2C 1: USER_DEFINED_8_BIT_DATA_TYPE_2 + DPCM10 + EXP16 0x2C 2: USER_DEFINED_8_BIT_DATA_TYPE_3 + DPCM10 + EXP16 0x2C 3: USER_DEFINED_8_BIT_DATA_TYPE_4 + DPCM10 + EXP16 0x2C 4: USER_DEFINED_8_BIT_DATA_TYPE_5 + DPCM10 + EXP16 0x2C 5: USER_DEFINED_8_BIT_DATA_TYPE_6 + DPCM10 + EXP16 0x2C 6: USER_DEFINED_8_BIT_DATA_TYPE_7 + DPCM10 + EXP16 0x2C 7: USER_DEFINED_8_BIT_DATA_TYPE_8 + DPCM10 + EXP16 0x 329: RAW7 + DPCM10 + VP 0x32A: RAW8 + DPCM10 + VP 0x 340: USER_DEFINED_8_BIT_DATA_TYPE_1 + DPCM10 + VP 0x 341: USER_DEFINED_8_BIT_DATA_TYPE_2 + DPCM10 + VP 0x 342: USER_DEFINED_8_BIT_DATA_TYPE_3 + DPCM10 + VP 0x 343: USER_DEFINED_8_BIT_DATA_TYPE_4 + DPCM10 + VP 0x 344: USER_DEFINED_8_BIT_DATA_TYPE_5 + DPCM10 + VP 0x 345: USER_DEFINED_8_BIT_DATA_TYPE_6 + DPCM10 + VP 0x 346: USER_DEFINED_8_BIT_DATA_TYPE_7 + DPCM10 + VP 0x 347: USER_DEFINED_8_BIT_DATA_TYPE_8 + DPCM10 + VP 0x 368: RAW6 DPCM12 + VP 0x 369: RAW7 DPCM12 + EXP16 0x36A: RAW8 DPCM12 + EXP16 0x3A 8: RAW6 DPCM12 + EXP16 0x3A 9: RAW7 DPCM12 + VP 0x3AA: RAW8 DPCM12 + VP

Copyright © 2025 Texas Instruments Incorporated

11.6.1.1.3.5.2.76 CSI2_CTX7_DAT_OFST Register (Offset = 158h) [Reset = 00000000h]

CSI2_CTX7_DAT_OFST is shown in Table 11-1510.

Return to the Summary Table.

DATA MEM ADDRESS OFFSET REGISTER - Context This register sets the offset which is applied on the destination address after each line is written to memory. This register applies for both CSI2_CTX_DAT_PING_ADDR and CSI2_CTX_DAT_PONG_ADDR.

Table 11-1510. CSI2_CTX7_DAT_OFST Register Field Descriptions

Bit	Field	Type	Reset	Description
31-17	RES21	R	0h	RESERVE FIELD
16-5	OFST	R/W	0h	Line offset programmed in bytes (signed value 2's complement). If OFST = 0, the data is written contiguously in memory. Otherwise, OFST sets the destination offset between the first pixel of the previous line and the first pixel of the current line. Valid range: -2^{17} ~ (2^{17}-1)
4-0	RESERVED	R	0h	

Copyright © 2025 Texas Instruments Incorporated

11.6.1.1.3.5.2.77 CSI2_CTX7_DAT_PING_ADDR Register (Offset = 15Ch) [Reset = 00000000h]

CSI2_CTX7_DAT_PING_ADDR is shown in Table 11-1511.

Return to the Summary Table.

DATA MEM PING ADDRESS REGISTER - Context This register sets the 32-bit memory address where the pixel data are stored. The destination is double buffered: this register sets the PING address. Double buffering is enabled when the addresses

Table 11-1511. CSI2_CTX7_DAT_PING_ADDR Register Field Descriptions

Bit	Field	Type	Reset	Description
31-5	ADDR	R/W	0h	27 most significant bits of the 32-bit address.
4-0	RES	R	0h	RESERVE FIELD

Copyright © 2025 Texas Instruments Incorporated

11.6.1.1.3.5.2.78 CSI2_CTX7_DAT_PONG_ADDR Register (Offset = 160h) [Reset = 00000000h]

CSI2_CTX7_DAT_PONG_ADDR is shown in Table 11-1512.

Return to the Summary Table.

DATA MEM PONG ADDRESS REGISTER - Context This register sets the 32-bit memory address where the pixel data are stored. The destination is double buffered: this register sets the PONG address. Double buffering is enabled when the addresses

Table 11-1512. CSI2_CTX7_DAT_PONG_ADDR Register Field Descriptions

Bit	Field	Type	Reset	Description
31-5	ADDR	R/W	0h	27 most significant bits of the 32-bit address.
4-0	RES	R	0h	RESERVE FIELD

Copyright © 2025 Texas Instruments Incorporated

11.6.1.1.3.5.2.79 CSI2_CTX7_IRQENABLE Register (Offset = 164h) [Reset = 00000000h]

CSI2_CTX7_IRQENABLE is shown in Table 11-1513.

Return to the Summary Table.

INTERRUPT ENABLE REGISTER - Context This register regroups all the events related to Context.

Table 11-1513. CSI2_CTX7_IRQENABLE Register Field Descriptions

Bit	Field	Type	Reset	Description
31-9	RES22	R	0h	RESERVE FIELD
8	ECC_CORRECTION_IRQ	R/W	0h	Context - ECC has been used to correct the only 1-bit error (long packet only). 0: Event is masked 1: Event generates an interrupt when it occurs
7	LINE_NUMBER_IRQ	R/W	0h	Context - Line number is reached. 0: Event is masked 1: Event generates an interrupt when it occurs
6	FRAME_NUMBER_IRQ	R/W	0h	Context - Frame counter reached. 0: Event is masked 1: Event generates an interrupt when it occurs
5	CS_IRQ	R/W	0h	Context - Check-Sum of the payload mismatch detection 0: Event is masked 1: Event generates an interrupt when it occurs
4	RES23	R	0h	RESERVE FIELD
3	LE_IRQ	R/W	0h	Context - Line end sync code detection. 0: Event is masked 1: Event generates an interrupt when it occurs
2	LS_IRQ	R/W	0h	Context - Line start sync code detection. 0: Event is masked 1: Event generates an interrupt when it occurs
1	FE_IRQ	R/W	0h	Context - Frame end sync code detection. 0: Event is masked 1: Event generates an interrupt when it occurs
0	FS_IRQ	R/W	0h	Context - Frame start sync code detection. 0: Event is masked 1: Event generates an interrupt when it occurs

Copyright © 2025 Texas Instruments Incorporated

11.6.1.1.3.5.2.80 CSI2_CTX7_IRQSTATUS Register (Offset = 168h) [Reset = 00000000h]

CSI2_CTX7_IRQSTATUS is shown in Table 11-1514.

Return to the Summary Table.

INTERRUPT STATUS REGISTER - Context This register regroups all the events related to Context.

Table 11-1514. CSI2_CTX7_IRQSTATUS Register Field Descriptions

Bit	Field	Type	Reset	Description
31-9	RES24	R	0h	RESERVE FIELD
8	ECC_CORRECTION_IRQ	R/W	0h	Context - ECC has been used to do the correction of the only 1-bit error status (long packet only). 0: READS: Event is false. WRITES: Status bit unchanged. 1: READS: Event is true (pending). WRITES: Status bit is reset. . - (RW W1toClr)
7	LINE_NUMBER_IRQ	R/W	0h	Contexc - Line number reached status. 0: READS: Event is false. WRITES: Status bit unchanged. 1: READS: Event is true (pending). WRITES: Status bit is reset. - (RW W1toClr)
6	FRAME_NUMBER_IRQ	R/W	0h	Context - Frame counter reached status 0: READS: Event is false. WRITES: Status bit unchanged. 1: READS: Event is true (pending). WRITES: Status bit is reset. - (RW W1toClr)
5	CS_IRQ	R/W	0h	Context - Check-Sum mismatch status. 0: READS: Event is false. WRITES: Status bit unchanged. 1: READS: Event is true (pending). WRITES: Status bit is reset. - (RW W1toClr)
4	RES25	R	0h	RESERVE FIELD
3	LE_IRQ	R/W	0h	Context - Line end sync code detection status. 0: READS: Event is false. WRITES: Status bit unchanged. 1: READS: Event is true (pending). WRITES: Status bit is reset. . - (RW W1toClr)
2	LS_IRQ	R/W	0h	Context - Line start sync code detection status. 0: READS: Event is false. WRITES: Status bit unchanged. 1: READS: Event is true (pending). WRITES: Status bit is reset. - (RW W1toClr)
1	FE_IRQ	R/W	0h	Context - Frame end sync code detection status. 0: READS: Event is false. WRITES: Status bit unchanged. 1: READS: Event is true (pending). WRITES: Status bit is reset. - (RW W1toClr)
0	FS_IRQ	R/W	0h	Context - Frame start sync code detection status. 0: READS: Event is false. WRITES: Status bit unchanged. 1: READS: Event is true (pending). WRITES: Status bit is reset. - (RW W1toClr)

Copyright © 2025 Texas Instruments Incorporated

11.6.1.1.3.5.2.81 CSI2_CTX7_CTRL3 Register (Offset = 16Ch) [Reset = 00000000h]

CSI2_CTX7_CTRL3 is shown in Table 11-1515.

Return to the Summary Table.

CONTROL REGISTER - Context This register controls the Context. This register is shadowed: modifications are taken into account after the next FSC sync code.

Table 11-1515. CSI2_CTX7_CTRL3 Register Field Descriptions

Bit	Field	Type	Reset	Description
31-30	RESERVED	R	0h	Reserved
29-16	ALPHA	R/W	0h	When TRANSCODE=0 Alpha value for RGB888, RGB666 and RBG444. When TRANSCODE=1 and BYS=1 Image width, in pixels, acquired from the BYS port.
15-0	LINE_NUMBER	R/W	0h	Line number for the interrupt generation

Copyright © 2025 Texas Instruments Incorporated

11.6.1.1.3.5.2.82 CSI2_PHY_CFG_REG0 Register (Offset = 170h) [Reset = 00000427h]

CSI2_PHY_CFG_REG0 is shown in Table 11-1516.

Return to the Summary Table.

Table 11-1516. CSI2_PHY_CFG_REG0 Register Field Descriptions

Bit	Field	Type	Reset	Description
31-24	HS_CLK_CONFIG	R/W	0h	Disable clock missing detector
23-16	RESERVED	R	0h	RESERVED
15-8	THS_TERM	R/W	4h	Ths-term timing parameter in multiples of DDR clock. Effective time for enabling of termination= synchronizer delay + timer delay + LPRX delay + combinational routing delay ~ (1-2)* DDRCLK + THS-TERM + ~ (1-15) ns Programmed value = ceil(12.5 / DDR clock period) –1
7-0	THS_SETTLE	R/W	27h	THS-SETTLE timing parameter in multiples on DDR clock frequency. Effective Ths-settle seen on line (starting to look for sync pattern) = synchronizer delay + timer delay + LPRX delay + combinational routing delay – pipeline delay in HS data path. ~ (1-2)* DDRCLK + THS-SETTLE + ~ (1-15) ns -1*DDRCLK Programmed value = ceil(90 ns / DDR clock period) + 3

Copyright © 2025 Texas Instruments Incorporated

11.6.1.1.3.5.2.83 CSI2_PHY_CFG_REG1 Register (Offset = 174h) [Reset = 0002E10Eh]

CSI2_PHY_CFG_REG1 is shown in Table 11-1517.

Return to the Summary Table.

Table 11-1517. CSI2_PHY_CFG_REG1 Register Field Descriptions

Bit	Field	Type	Reset	Description
31-30	RSVD2	R/W	0h	Reserved
29	RESETDONECTRLCLK	R	0h	RESETDONECTRLCLK
28	RESETDONERXBYTECLK	R	0h	RESETDONERXBYTECLK
27-26	RSVD1	R/W	0h	Reserved
25	CLK_MISS_DET	R	0h	1: Error in clock missing detector 0: Clock missing detector successful.
24-18	TCLK_TERM	R/W	0h	TCLK_TERM timing parameter in multiples of CTRLCLK Effective time for enabling of termination = synchronizer delay + timer delay + LPRX delay + combinational routing delay ~ (1–2)* CTRLCLK + TCLK_TERM + ~ (1–15) ns Programmed value = ceil(9.5 / CTRLCLK period) – 1
17-10	D_PHY_HS_SYNC_PAT	R/W	B8h	DPHY mode HS sync pattern in byte order (reverse of RW 0xB8 received order) D-PHY mode sync pattern. Default : “10111000”
9-8	CTRLCLK_DIV_FACT	R/W	1h	Divide factor for CTRLCLK for CLKMISS detector
7-0	TCLK_SETTLE	R/W	Eh	TCLK_SETTLE timing parameter in multiples of CTRLCLK Clock Effective TCLK_SETTLE = synchronizer delay + timer delay + LPRX delay + combinational routing delay ~(1–2)* CTRLCLK + Tclk-settle + ~ (1 –15) ns Programmed value = max[3, ceil(155 ns/CTRLCLK period) –1]

Copyright © 2025 Texas Instruments Incorporated

11.6.1.1.3.5.2.84 CSI2_PHY_CFG_REG2 Register (Offset = 178h) [Reset = 000000FFh]

CSI2_PHY_CFG_REG2 is shown in Table 11-1518.

Return to the Summary Table.

Table 11-1518. CSI2_PHY_CFG_REG2 Register Field Descriptions

Bit	Field	Type	Reset	Description
31-30	RXTRIGGERESC0	R/W	0h	Mapping of Trigger escape entry command to PPI output RXTRIGGERESC0
29-28	RXTRIGGERESC1	R/W	0h	Mapping of Trigger escape entry command to PPI output RXTRIGGERESC1
27-26	RXTRIGGERESC2	R/W	0h	Mapping of Trigger escape entry command to PPI output RXTRIGGERESC2.
25-24	RXTRIGGERESC3	R/W	0h	Mapping of Trigger escape entry command to PPI output RXTRIGGERESC3
23-0	CCP2_SYNC_PAT	R/W	FFh	CCP2 mode sync pattern in byte order (reverse of received order)

Copyright © 2025 Texas Instruments Incorporated

11.6.1.1.3.5.2.85 CSI2_PHY_CFG_REG3 Register (Offset = 17Ch) [Reset = 00000000h]

CSI2_PHY_CFG_REG3 is shown in Table 11-1519.

Return to the Summary Table.

Table 11-1519. CSI2_PHY_CFG_REG3 Register Field Descriptions

Bit	Field	Type	Reset	Description
31	OVR_ENHSRX	R/W	0h	RESERVE FIELD
30-26	ENHSRX	R/W	0h	RESERVE FIELD
25	OVR_ENRXTERM	R/W	0h	RESERVE FIELD
24-20	ENRXTERM	R/W	0h	RESERVE FIELD
19	OVR_ENLPRX	R/W	0h	RESERVE FIELD
18-14	ENLPRX	R/W	0h	RESERVE FIELD
13-9	ENULPRX	R/W	0h	RESERVE FIELD
8	OVR_ENLDO	R/W	0h	RESERVE FIELD
7	ENLDO	R/W	0h	RESERVE FIELD
6	OVR_ENBIAS	R/W	0h	RESERVE FIELD
5	ENBIAS	R/W	0h	RESERVE FIELD
4	OVR_ENCCP_TO_ANAT	R/W	0h	RESERVE FIELD
3	OVR_ENCCP_TO_HSRX	R/W	0h	RESERVE FIELD
2	RSVD1	R/W	0h	RESERVE FIELD
1	RECAL_HS_RX	R/W	0h	RESERVE FIELD
0	RECAL_BIAS	R/W	0h	RESERVE FIELD

Copyright © 2025 Texas Instruments Incorporated

11.6.1.1.3.5.2.86 CSI2_PHY_CFG_REG4 Register (Offset = 180h) [Reset = 00000000h]

CSI2_PHY_CFG_REG4 is shown in Table 11-1520.

Return to the Summary Table.

Table 11-1520. CSI2_PHY_CFG_REG4 Register Field Descriptions

Bit	Field	Type	Reset	Description
31-27	TRIM_BIAS_GEN	R/W	0h	RESERVE FIELD
26-22	TRIM_TERM_LANE4	R/W	0h	RESERVE FIELD
21-17	TRIM_TERM_LANE3	R/W	0h	RESERVE FIELD
16-12	TRIM_TERM_LANE2	R/W	0h	RESERVE FIELD
11-7	TRIM_TERM_LANE1	R/W	0h	RESERVE FIELD
6-2	TRIM_TERM_LANE0	R/W	0h	RESERVE FIELD
1	BYPASS_EFUSE	R/W	0h	RESERVE FIELD
0	RSVD1	R/W	0h	RESERVE FIELD

Copyright © 2025 Texas Instruments Incorporated

11.6.1.1.3.5.2.87 CSI2_PHY_CFG_REG5 Register (Offset = 184h) [Reset = 00000000h]

CSI2_PHY_CFG_REG5 is shown in Table 11-1521.

Return to the Summary Table.

Table 11-1521. CSI2_PHY_CFG_REG5 Register Field Descriptions

Bit	Field	Type	Reset	Description
31-26	TRIM_OFFSET_LANE4_HS_RX	R/W	0h	RESERVE FIELD
25-20	TRIM_OFFSET_LANE3_HS_RX	R/W	0h	RESERVE FIELD
19-14	TRIM_OFFSET_LANE2_HS_RX	R/W	0h	RESERVE FIELD
13-8	TRIM_OFFSET_LANE1_HS_RX	R/W	0h	RESERVE FIELD
7-2	TRIM_OFFSET_LANE0_HS_RX	R/W	0h	RESERVE FIELD
1	BYPASS_CALIB_OFFSET	R/W	0h	RESERVE FIELD
0	RSVD1	R/W	0h	RESERVE FIELD

Copyright © 2025 Texas Instruments Incorporated

11.6.1.1.3.5.2.88 CSI2_PHY_CFG_REG6 Register (Offset = 188h) [Reset = 00000000h]

CSI2_PHY_CFG_REG6 is shown in Table 11-1522.

Return to the Summary Table.

Table 11-1522. CSI2_PHY_CFG_REG6 Register Field Descriptions

Bit	Field	Type	Reset	Description
31-21	RSVD2	R/W	0h	RESERVE FIELD
20	OVR_AFE_LANE_ADR_POL	R/W	0h	RESERVE FIELD
19-12	AFE_LANE_SEL	R/W	0h	RESERVE FIELD
11	AFE_LANE_POL	R/W	0h	RESERVE FIELD
10	HSCOMOOUT	R/W	0h	RESERVE FIELD
9	BYPASS_LDO_REG	R/W	0h	RESERVE FIELD
8	OBSV_LDO_VOLT_DYA	R/W	0h	RESERVE FIELD
7	OBSV_BIAS_CURR_DXA	R/W	0h	RESERVE FIELD
6	RSVD1	R/W	0h	RESERVE FIELD
5	BIASGEN_CAL_OVR	R/W	0h	RESERVE FIELD
4-0	BIASGEN_CAL_OVR_VAL	R/W	0h	RESERVE FIELD

Copyright © 2025 Texas Instruments Incorporated

11.6.1.1.3.5.2.89 CSI2_CTX0_TRANSCODEH Register (Offset = 1C0h) [Reset = 00000000h]

CSI2_CTX0_TRANSCODEH is shown in Table 11-1523.

Return to the Summary Table.

Transcode configuration register: defines horizontal frame cropping

Table 11-1523. CSI2_CTX0_TRANSCODEH Register Field Descriptions

Bit	Field	Type	Reset	Description
31-29	RSVD2	R	0h	Reserved
28-16	HCOUNT	R/W	0h	Pixels to output per line when the values is between 1 and 8191. Pixels HSKIP-WIDTH pixels are output when HCOUNT=0. WIDTH corresponds to the image width provided by the sensor.
15-13	RSVD1	R	0h	Reserved
12-0	HSKIP	R/W	0h	Pixel to skip horizontally. Valid values: 0-8191

Copyright © 2025 Texas Instruments Incorporated

11.6.1.1.3.5.2.90 CSI2_CTX0_TRANSCODEV Register (Offset = 1C4h) [Reset = 00000000h]

CSI2_CTX0_TRANSCODEV is shown in Table 11-1524.

Return to the Summary Table.

Transcode configuration register: defines vertical frame cropping

Table 11-1524. CSI2_CTX0_TRANSCODEV Register Field Descriptions

Bit	Field	Type	Reset	Description
31-29	RSVD2	R	0h	Reserved
28-16	VCOUNT	R/W	0h	Lines to output per frame when the values is between 1 and 8191. Pixels VSKIP-HEIGHT pixels are output when VCOUNT=0. HEIGHT corresponds to the image height provided by the sensor.
15-13	RSVD1	R	0h	Reserved
12-0	VSKIP	R/W	0h	Pixel to skip vertically Valid values: 0-8191

Copyright © 2025 Texas Instruments Incorporated

11.6.1.1.3.5.2.91 CSI2_CTX1_TRANSCODEH Register (Offset = 1C8h) [Reset = 00000000h]

CSI2_CTX1_TRANSCODEH is shown in Table 11-1525.

Return to the Summary Table.

Transcode configuration register: defines horizontal frame cropping

Table 11-1525. CSI2_CTX1_TRANSCODEH Register Field Descriptions

Bit	Field	Type	Reset	Description
31-29	RSVD2	R	0h	Reserved
28-16	HCOUNT	R/W	0h	Pixels to output per line when the values is between 1 and 8191. Pixels HSKIP-WIDTH pixels are output when HCOUNT=0. WIDTH corresponds to the image width provided by the sensor.
15-13	RSVD1	R	0h	Reserved
12-0	HSKIP	R/W	0h	Pixel to skip horizontally. Valid values: 0-8191

Copyright © 2025 Texas Instruments Incorporated

11.6.1.1.3.5.2.92 CSI2_CTX1_TRANSCODEV Register (Offset = 1CCh) [Reset = 00000000h]

CSI2_CTX1_TRANSCODEV is shown in Table 11-1526.

Return to the Summary Table.

Transcode configuration register: defines vertical frame cropping

Table 11-1526. CSI2_CTX1_TRANSCODEV Register Field Descriptions

Bit	Field	Type	Reset	Description
31-29	RSVD2	R	0h	Reserved
28-16	VCOUNT	R/W	0h	Lines to output per frame when the values is between 1 and 8191. Pixels VSKIP-HEIGHT pixels are output when VCOUNT=0. HEIGHT corresponds to the image height provided by the sensor.
15-13	RSVD1	R	0h	Reserved
12-0	VSKIP	R/W	0h	Pixel to skip vertically Valid values: 0-8191

Copyright © 2025 Texas Instruments Incorporated

11.6.1.1.3.5.2.93 CSI2_CTX2_TRANSCODEH Register (Offset = 1D0h) [Reset = 00000000h]

CSI2_CTX2_TRANSCODEH is shown in Table 11-1527.

Return to the Summary Table.

Transcode configuration register: defines horizontal frame cropping

Table 11-1527. CSI2_CTX2_TRANSCODEH Register Field Descriptions

Bit	Field	Type	Reset	Description
31-29	RSVD2	R	0h	Reserved
28-16	HCOUNT	R/W	0h	Pixels to output per line when the values is between 1 and 8191. Pixels HSKIP-WIDTH pixels are output when HCOUNT=0. WIDTH corresponds to the image width provided by the sensor.
15-13	RSVD1	R	0h	Reserved
12-0	HSKIP	R/W	0h	Pixel to skip horizontally. Valid values: 0-8191

Copyright © 2025 Texas Instruments Incorporated

11.6.1.1.3.5.2.94 CSI2_CTX2_TRANSCODEV Register (Offset = 1D4h) [Reset = 00000000h]

CSI2_CTX2_TRANSCODEV is shown in Table 11-1528.

Return to the Summary Table.

Transcode configuration register: defines vertical frame cropping

Table 11-1528. CSI2_CTX2_TRANSCODEV Register Field Descriptions

Bit	Field	Type	Reset	Description
31-29	RSVD2	R	0h	Reserved
28-16	VCOUNT	R/W	0h	Lines to output per frame when the values is between 1 and 8191. Pixels VSKIP-HEIGHT pixels are output when VCOUNT=0. HEIGHT corresponds to the image height provided by the sensor.
15-13	RSVD1	R	0h	Reserved
12-0	VSKIP	R/W	0h	Pixel to skip vertically Valid values: 0-8191

Copyright © 2025 Texas Instruments Incorporated

11.6.1.1.3.5.2.95 CSI2_CTX3_TRANSCODEH Register (Offset = 1D8h) [Reset = 00000000h]

CSI2_CTX3_TRANSCODEH is shown in Table 11-1529.

Return to the Summary Table.

Transcode configuration register: defines horizontal frame cropping

Table 11-1529. CSI2_CTX3_TRANSCODEH Register Field Descriptions

Bit	Field	Type	Reset	Description
31-29	RSVD2	R	0h	Reserved
28-16	HCOUNT	R/W	0h	Pixels to output per line when the values is between 1 and 8191. Pixels HSKIP-WIDTH pixels are output when HCOUNT=0. WIDTH corresponds to the image width provided by the sensor.
15-13	RSVD1	R	0h	Reserved
12-0	HSKIP	R/W	0h	Pixel to skip horizontally. Valid values: 0-8191

Copyright © 2025 Texas Instruments Incorporated

11.6.1.1.3.5.2.96 CSI2_CTX3_TRANSCODEV Register (Offset = 1DCh) [Reset = 00000000h]

CSI2_CTX3_TRANSCODEV is shown in Table 11-1530.

Return to the Summary Table.

Transcode configuration register: defines vertical frame cropping

Table 11-1530. CSI2_CTX3_TRANSCODEV Register Field Descriptions

Bit	Field	Type	Reset	Description
31-29	RSVD2	R	0h	Reserved
28-16	VCOUNT	R/W	0h	Lines to output per frame when the values is between 1 and 8191. Pixels VSKIP-HEIGHT pixels are output when VCOUNT=0. HEIGHT corresponds to the image height provided by the sensor.
15-13	RSVD1	R	0h	Reserved
12-0	VSKIP	R/W	0h	Pixel to skip vertically Valid values: 0-8191

Copyright © 2025 Texas Instruments Incorporated

11.6.1.1.3.5.2.97 CSI2_CTX4_TRANSCODEH Register (Offset = 1E0h) [Reset = 00000000h]

CSI2_CTX4_TRANSCODEH is shown in Table 11-1531.

Return to the Summary Table.

Transcode configuration register: defines horizontal frame cropping

Table 11-1531. CSI2_CTX4_TRANSCODEH Register Field Descriptions

Bit	Field	Type	Reset	Description
31-29	RSVD2	R	0h	Reserved
28-16	HCOUNT	R/W	0h	Pixels to output per line when the values is between 1 and 8191. Pixels HSKIP-WIDTH pixels are output when HCOUNT=0. WIDTH corresponds to the image width provided by the sensor.
15-13	RSVD1	R	0h	Reserved
12-0	HSKIP	R/W	0h	Pixel to skip horizontally. Valid values: 0-8191

Copyright © 2025 Texas Instruments Incorporated

11.6.1.1.3.5.2.98 CSI2_CTX4_TRANSCODEV Register (Offset = 1E4h) [Reset = 00000000h]

CSI2_CTX4_TRANSCODEV is shown in Table 11-1532.

Return to the Summary Table.

Transcode configuration register: defines vertical frame cropping

Table 11-1532. CSI2_CTX4_TRANSCODEV Register Field Descriptions

Bit	Field	Type	Reset	Description
31-29	RSVD2	R	0h	Reserved
28-16	VCOUNT	R/W	0h	Lines to output per frame when the values is between 1 and 8191. Pixels VSKIP-HEIGHT pixels are output when VCOUNT=0. HEIGHT corresponds to the image height provided by the sensor.
15-13	RSVD1	R	0h	Reserved
12-0	VSKIP	R/W	0h	Pixel to skip vertically Valid values: 0-8191

Copyright © 2025 Texas Instruments Incorporated

11.6.1.1.3.5.2.99 CSI2_CTX5_TRANSCODEH Register (Offset = 1E8h) [Reset = 00000000h]

CSI2_CTX5_TRANSCODEH is shown in Table 11-1533.

Return to the Summary Table.

Transcode configuration register: defines horizontal frame cropping

Table 11-1533. CSI2_CTX5_TRANSCODEH Register Field Descriptions

Bit	Field	Type	Reset	Description
31-29	RSVD2	R	0h	Reserved
28-16	HCOUNT	R/W	0h	Pixels to output per line when the values is between 1 and 8191. Pixels HSKIP-WIDTH pixels are output when HCOUNT=0. WIDTH corresponds to the image width provided by the sensor.
15-13	RSVD1	R	0h	Reserved
12-0	HSKIP	R/W	0h	Pixel to skip horizontally. Valid values: 0-8191

Copyright © 2025 Texas Instruments Incorporated

11.6.1.1.3.5.2.100 CSI2_CTX5_TRANSCODEV Register (Offset = 1ECh) [Reset = 00000000h]

CSI2_CTX5_TRANSCODEV is shown in Table 11-1534.

Return to the Summary Table.

Transcode configuration register: defines vertical frame cropping

Table 11-1534. CSI2_CTX5_TRANSCODEV Register Field Descriptions

Bit	Field	Type	Reset	Description
31-29	RSVD2	R	0h	Reserved
28-16	VCOUNT	R/W	0h	Lines to output per frame when the values is between 1 and 8191. Pixels VSKIP-HEIGHT pixels are output when VCOUNT=0. HEIGHT corresponds to the image height provided by the sensor.
15-13	RSVD1	R	0h	Reserved
12-0	VSKIP	R/W	0h	Pixel to skip vertically Valid values: 0-8191

Copyright © 2025 Texas Instruments Incorporated

11.6.1.1.3.5.2.101 CSI2_CTX6_TRANSCODEH Register (Offset = 1F0h) [Reset = 00000000h]

CSI2_CTX6_TRANSCODEH is shown in Table 11-1535.

Return to the Summary Table.

Transcode configuration register: defines horizontal frame cropping

Table 11-1535. CSI2_CTX6_TRANSCODEH Register Field Descriptions

Bit	Field	Type	Reset	Description
31-29	RSVD2	R	0h	Reserved
28-16	HCOUNT	R/W	0h	Pixels to output per line when the values is between 1 and 8191. Pixels HSKIP-WIDTH pixels are output when HCOUNT=0. WIDTH corresponds to the image width provided by the sensor.
15-13	RSVD1	R	0h	Reserved
12-0	HSKIP	R/W	0h	Pixel to skip horizontally. Valid values: 0-8191

Copyright © 2025 Texas Instruments Incorporated

11.6.1.1.3.5.2.102 CSI2_CTX6_TRANSCODEV Register (Offset = 1F4h) [Reset = 00000000h]

CSI2_CTX6_TRANSCODEV is shown in Table 11-1536.

Return to the Summary Table.

Transcode configuration register: defines vertical frame cropping

Table 11-1536. CSI2_CTX6_TRANSCODEV Register Field Descriptions

Bit	Field	Type	Reset	Description
31-29	RSVD2	R	0h	Reserved
28-16	VCOUNT	R/W	0h	Lines to output per frame when the values is between 1 and 8191. Pixels VSKIP-HEIGHT pixels are output when VCOUNT=0. HEIGHT corresponds to the image height provided by the sensor.
15-13	RSVD1	R	0h	Reserved
12-0	VSKIP	R/W	0h	Pixel to skip vertically Valid values: 0-8191

Copyright © 2025 Texas Instruments Incorporated

11.6.1.1.3.5.2.103 CSI2_CTX7_TRANSCODEH Register (Offset = 1F8h) [Reset = 00000000h]

CSI2_CTX7_TRANSCODEH is shown in Table 11-1537.

Return to the Summary Table.

Transcode configuration register: defines horizontal frame cropping

Table 11-1537. CSI2_CTX7_TRANSCODEH Register Field Descriptions

Bit	Field	Type	Reset	Description
31-29	RSVD2	R	0h	Reserved
28-16	HCOUNT	R/W	0h	Pixels to output per line when the values is between 1 and 8191. Pixels HSKIP-WIDTH pixels are output when HCOUNT=0. WIDTH corresponds to the image width provided by the sensor.
15-13	RSVD1	R	0h	Reserved
12-0	HSKIP	R/W	0h	Pixel to skip horizontally. Valid values: 0-8191

Copyright © 2025 Texas Instruments Incorporated

11.6.1.1.3.5.2.104 CSI2_CTX7_TRANSCODEV Register (Offset = 1FCh) [Reset = 00000000h]

CSI2_CTX7_TRANSCODEV is shown in Table 11-1538.

Return to the Summary Table.

Transcode configuration register: defines vertical frame cropping

Table 11-1538. CSI2_CTX7_TRANSCODEV Register Field Descriptions

Bit	Field	Type	Reset	Description
31-29	RSVD2	R	0h	Reserved
28-16	VCOUNT	R/W	0h	Lines to output per frame when the values is between 1 and 8191. Pixels VSKIP-HEIGHT pixels are output when VCOUNT=0. HEIGHT corresponds to the image height provided by the sensor.
15-13	RSVD1	R	0h	Reserved
12-0	VSKIP	R/W	0h	Pixel to skip vertically Valid values: 0-8191

11.7 Timer Modules

11.7.1 Real-Time Interrupt (RTI) and Watchdog Module

This chapter describes the functionality of the real-time interrupt (RTI) module. The RTI is designed as an operating system timer to support a real time operating system (RTOS).

Note

This chapter describes a superset implementation of the RTI module that includes features and functionality related to DMA and Timebase control. These features are dependent on the device-specific feature content. Consult your device-specific datasheet to determine the applicability of these features to your device being used.

11.7.1.1 Overview

The real-time interrupt (RTI) module provides timer functionality for operating systems and for benchmarking code. The RTI module can incorporate several counters that define the time bases needed for scheduling in the operating system.

The timers also allow you to benchmark certain areas of code by reading the values of the counters at the beginning and the end of the desired code range and calculating the difference between the values.

11.7.1.1.1 Features

The RTI module has the following features:

- Two independent 64 bit counter blocks
- Windowed Watchdog Timer (WWDT) Feature
- Four configurable compares for generating operating system ticks or DMA requests. Each event can be driven by either counter block 0 or counter block 1.
- Fast enabling/disabling of events
- Two time stamp (capture) functions for system or peripheral interrupts, one for each counter block
- Digital windowed watchdog

The RTI does not support the following features:

- External clock supervising circuit to switch to internal prescale counter 0, if external clock source fails to increment in a predefined window.
- Capture events to capture timestamps through recording of timer status.
- Two time-stamp (capture) functions for system or peripheral interrupts, one for each counter block.
- Analog Watchdog via external RC Network to prevent for runaway code.

Copyright © 2025 Texas Instruments Incorporated

11.7.1.1.2 Industry Standard Compliance Statement

This module is specifically designed to fulfill the requirements for OSEK (**O**ffene **S**ysteme und deren **S**chnittstellen für die **E**lektronik im **K**raftfahrzeug, or Open Systems and the Corresponding Interfaces for Automotive Electronics) as well as OSEK/time-compliant operating systems, but is not limited to it.

Copyright © 2025 Texas Instruments Incorporated

11.7.1.2 Module Operation

Figure 11-404 illustrates the high level block diagram of the RTI module.

The RTI module has two independent counter blocks for generating different timebases: counter block 0 and counter block 1. The two counter blocks provide the same basic functionality.

A compare unit compares the counters with programmable values and generates four independent interrupt or DMA requests on compare matches. Each of the compare registers can be programmed to be compared to either counter block 0 or counter block 1.

The following sections describe the individual functions in more detail.

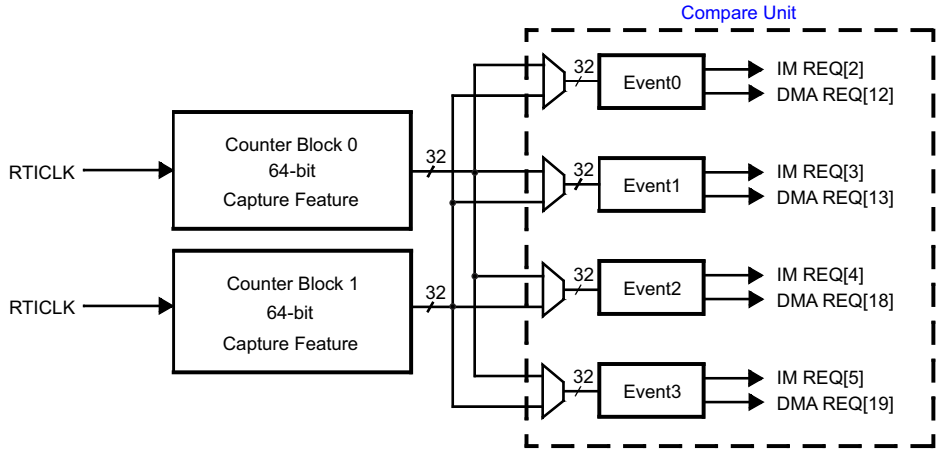

Figure 11-404. RTI Block Diagram

Note

During deep sleep entry, there is a need to disable the WDT warm reset propagation.

The WDT does **not** provide coverage in deep sleep mode. Thus, proper care must be taken by the application to ensure the WDT is not enabled when entering this mode. TOP_PRCM:RST_WDT_RESET_EN[0] must be set to 0.

11.7.1.2.1 Counter Operation

Each counter block consists of the following (see Figure 11-405):

- One 32-bit prescale counter , also called Up Counter (RTIUC0 or RTIUC1)
- One 32-bit free running counter (RTIFRC0 or RTIFRC1)

The RTIUC0/1 is driven by the RTICLK and counts up until the compare value in the compare up counter register (RTICPUC0 or RTICPUC1) is reached. When the compare matches, RTIFRC0/1 is incremented and RTIUC0/1 is reset to 0. If RTIFRC0/1 overflows, an interrupt is generated to the interrupt manager (NVIC/IM). The overflow interrupt is not intended to generate the timebase for the operating system. See Section 11.7.1.2.2 for the timebase generation. The up counter together with the compare up counter value prescale the RTI clock. The resulting formula for the frequency of the free running counter (RTIFRC0/1) is:

$$f_{RTIFRCx} = \begin{cases} \dfrac{f_{RTICLK}}{RTICPUCx + 1} & \text{when RTICPUCx} \neq 0 \\ \dfrac{f_{RTICLK}}{2^{32}+1} & \text{when RTICPUCx} = 0 \end{cases} \quad (9)$$

Copyright © 2025 Texas Instruments Incorporated

Note

Setting RTICPUCx equal to zero is not recommended. Doing so will hold the Up Counter at zero for two RTICLK cycles after it overflows from 0xFFFFFFFF to zero.

The counter values can be determined by reading the respective counter registers or by generating a hardware event which captures the counter value into the respective capture register. Both functions are described in the following sections.

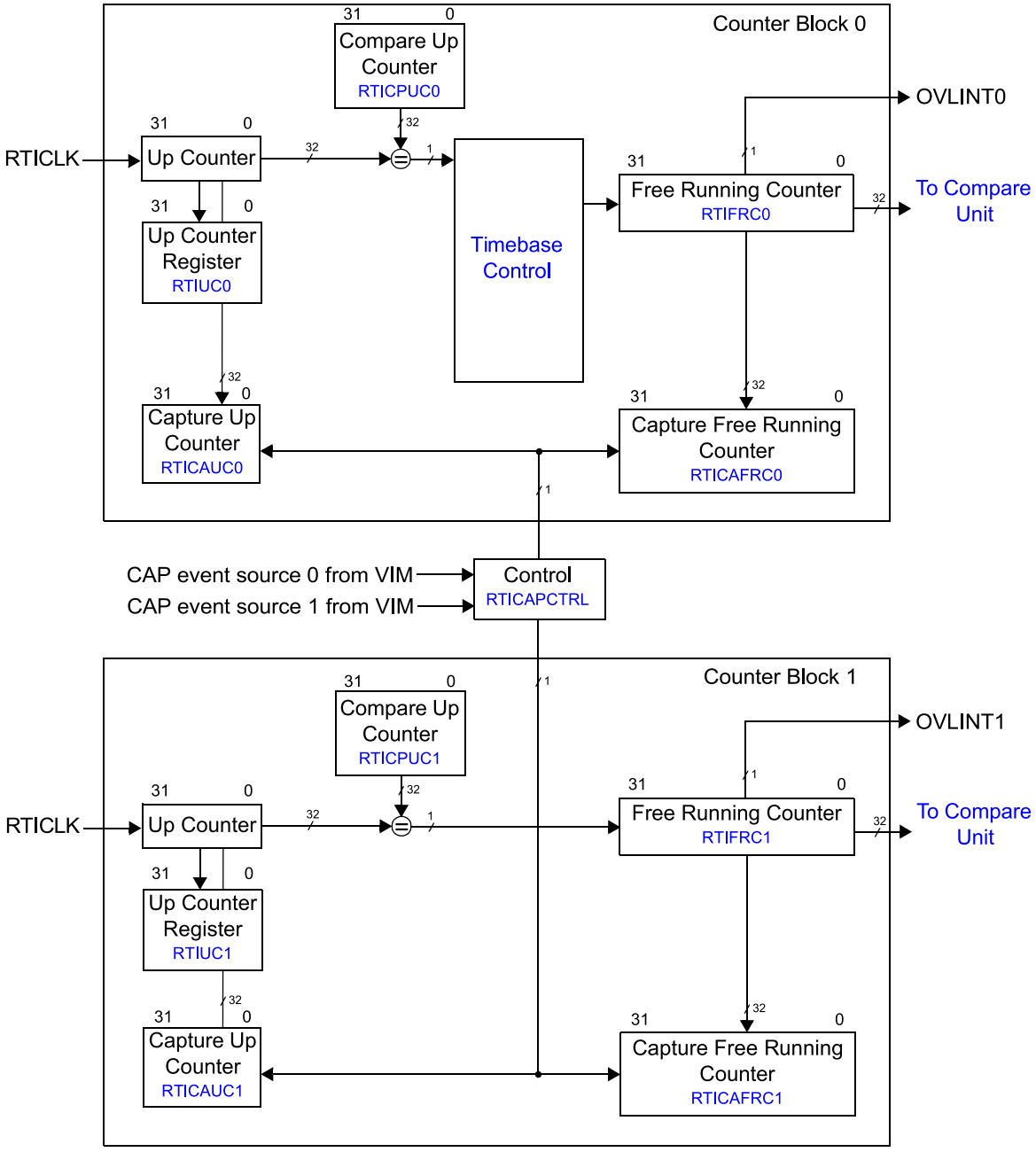

Figure 11-405. Counter Block Diagram

Copyright © 2025 Texas Instruments Incorporated

11.7.1.2.1.1 Counter and Capture Read Consistency

Portions of the device internal databus are 32-bits wide. If the application wants to read the 64-bit counters or the 64-bit capture values, a certain order of 32-bit read operations needs to be followed. This is to prevent one counter incrementing in between the two separate read operations to both counters.

Reading the Counters

The free running counter (RTIFRCx) must be read first. This priority will ensure that in the cycle when the CPU reads RTIFRCx, the up counter value is stored in its counter register (RTIUCx). The second read has to access the up counter register (RTIUCx), which then holds the value which corresponds to the number of RTICLK cycles that have elapsed at the time reading the free running counter register (RTIFRCx).

Note

The up counters are implemented as shadow registers. Reading RTIUCx without having read RTIFRCx first will return always the same value. RTIUCx will only be updated when RTIFRCx is read.

Reading the Capture Values

The free running counter capture register (RTICAFRCx) must be read first. This priority will ensure that in the cycle when the CPU reads RTICAFRCx, the up counter value is stored in its counter register (RTICAUCx). The second read has to access the up counter register (RTICAUCx), which then holds the value captured at the time when reading the capture free running counter register (RTICAFRCx).

Note

The capture up counter registers are implemented as shadow registers. Reading RTICAUCx without having read RTICAFRCx first will return always the same value. RTICAUCx will only be updated when RTICAFRCx is read.

11.7.1.2.1.2 Capture Feature

Both counter blocks also provide a capture feature on external events. Two capture sources can trigger the capture event. The source triggering the block is configurable (RTICAPCTRL). The sources originate from the Interrupt Manager (NVIC/IM) and allow the generation of capture events when a peripheral modules has generated an interrupt. Any of the peripheral interrupts can be selected as the capture event in the NVIC/IM.

When an event is detected, RTIUCx and RTIFRCx are stored in the capture up counter (RTICAUCx) and capture free running counter (RTICAFRCx) registers. The read order of the captured values must be the same as the read order of the actual counters (see Section 11.7.1.2.1.1).

11.7.1.2.2 Interrupt/DMA Requests

There are four compare registers (RTICOMPy) to generate interrupt requests to the NVIC/IM or DMA requests to the DMA controller. The interrupts can be used to generate different timebases for the operating system. Each of the compare registers can be configured to be compared to either RTIFRC0 or RTIFRC1. When the counter value matches the compare value, an interrupt is generated. To allow periodic interrupts, a certain value can be added to the compare value in RTICOMPy automatically. This value is stored in the update compare register (RTIUDCPy) and will be added after a compare is matched. The period of the generated interrupt/DMA request can be calculated with:

Copyright © 2025 Texas Instruments Incorporated

$$t_{COMPx} = t_{RTICLK} \times (RTICPUCy + 1) \times RTIUDCPy$$

if RTICPUCy ≠ 0,

$$t_{COMPx} = t_{RTICLK} \times (2^{32}+1) \times RTIUDCPy$$

if RTIUDCPy = 0,

$$t_{COMPx} = t_{RTICLK} \times (RTICPUCy + 1) \times 2^{32} \quad (10)$$

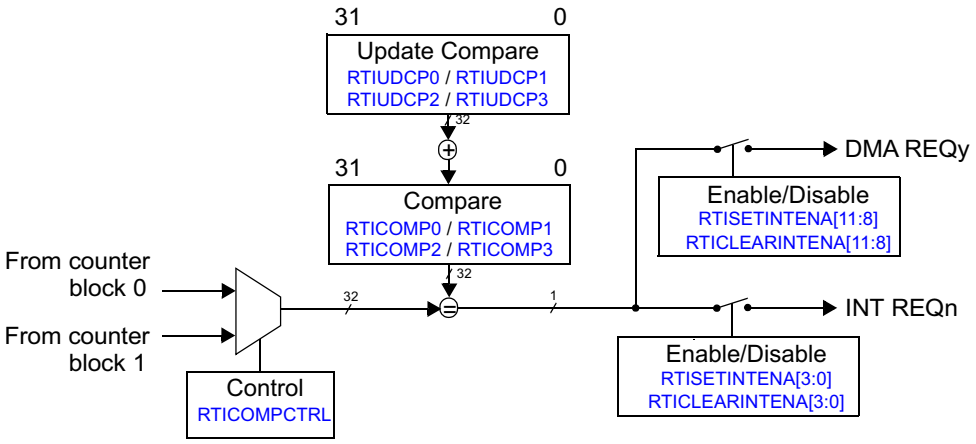

Figure 11-406. Compare Unit Block Diagram (shows only 1 of 4 blocks for simplification)

Another interrupt that can be generated is the overflow interrupt (OVLINTx) in case the RTIFRCx counter overflows.

The interrupts/DMA requests can be enabled in the RTISETINTENA register and disabled in the RTICLEARINTENA register. The RTIINTFLAG register shows the pending interrupts.

11.7.1.2.3 RTI Clocking

The counter blocks are clocked with RTICLK.

A clock supervision for the NTUx clocking scheme is implemented to avoid missing operating system ticks.

11.7.1.2.4 Digital Watchdog (DWD)

The digital watchdog (DWD) is an optional safety diagnostic which can detect a runaway CPU and generate either a reset or NMI (non-maskable interrupt) response. It generates resets or NMIs after a programmable period, and generates a reset if no correct key sequence was written to the RTIWDKEY register. Figure 11-407 illustrates the DWD.

Copyright © 2025 Texas Instruments Incorporated

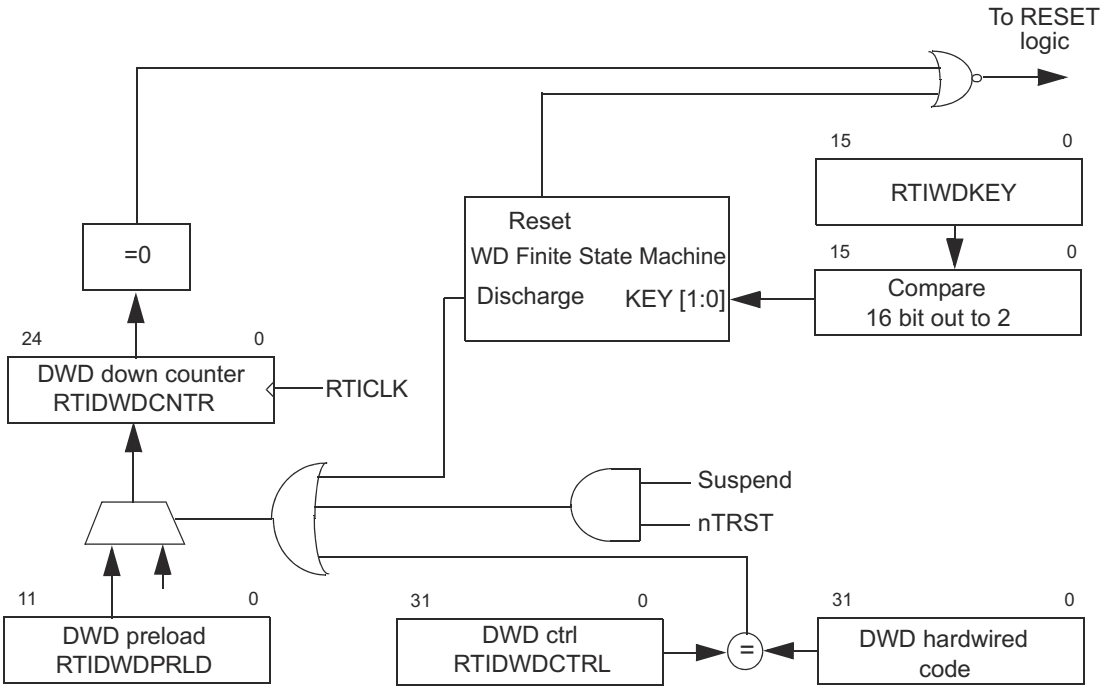

Figure 11-407. Digital Watchdog

Copyright © 2025 Texas Instruments Incorporated

11.7.1.2.4.1 Digital Watchdog (DWD)

The DWD is disabled by default. If it should be used, it must be enabled by writing a 32-bit value to the RTIDWDCTRL register.

Note

Once the DWD is enabled, it cannot be disabled except by system reset or power on reset.

If the correct key sequence is written to the RTIWDKEY register (0xE51A followed by 0xA35C), the 25-bit DWD down counter is reloaded with the left justified 12-bit preload value stored in RTIDWDPRLD. If an incorrect value is written, a watchdog reset will occur immediately. Also a reset or NMI will be generated when the DWD down counter is decremented to 0.

While the device is in suspend mode (halting debug mode), the DWD down counter keeps the value it had when entering suspend mode.

The DWD down counter will be decremented with the RTICLK frequency.

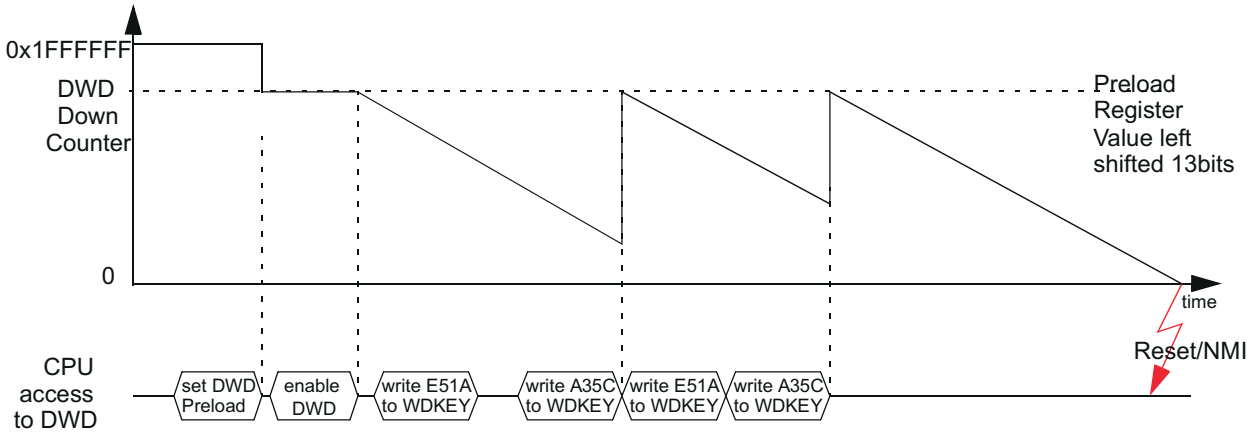

Figure 11-408. DWD Operation

The expiration time of the DWD down counter can be determined with the following equation:

$texp = (DWDPRLD + 1) \times 2^{13}/RTICLK$

where

DWDPRLD = 0...4095

Note

Care should be taken to ensure that the CPU write to the watchdog register is made allowing time for the write to propagate to the RTI.

11.7.1.2.4.2 Digital Windowed Watchdog (DWWD)

In addition to the time-out boundary configurable via the digital watchdog discussed in Section 11.7.1.2.4.1, for enhanced safety metrics it is desirable to check for a watchdog "pet" within a time window rather than using a single time threshold. This is enabled by the digital windowed watchdog (DWWD) feature.

- Functional Behavior

The DWWD opens a configurable time window in which the watchdog must be serviced. Any attempt to service the watchdog outside this time window, or a failure to service the watchdog in this time window, will cause

Copyright © 2025 Texas Instruments Incorporated

the watchdog to generate either a reset to the CPU. This is controlled by configuring the RTIWWDRXNCTRL register. As with the DWD, the DWWD is disabled after power on reset. When the DWWD is configured to generate a non-maskable interrupt on a window violation, the watchdog counter continues to count down. The NMI handler needs to clear the watchdog violation status flag(s) and then service the watchdog by writing the correct sequence in the watchdog key register. This service will cause the watchdog counter to get reloaded from the preload value and start counting down. If the NMI handler does not service the watchdog in time, it could count down all the way to zero and wrap around. If the NMI Handler does not service the watchdog in time, the NMI gets generated continuously, each time the counter counts to '0'.

The DWWD uses the Digital Watchdog (DWD) preload register (RTIDWDPRLD) setting to define the end-time of the window. The start-time of the window is defined by a window size configuration register(RTIWWDSIZECTRL).

The default window size is set to 100%, which corresponds to the DWD functionality of a time-out-only watchdog. The window size can be selected (through register RTIWWDSIZECTRL) from among 100%, 50%, 25%, 12.5%, 6.25% and 3.125% as shown in Figure 11-409. The window with the respective size will be opened before the end of the DWD expiration. The user has to serve the watchdog in the window. Otherwise, a reset or NMI will generate. Figure 11-410 shows an DWWD operation example (25% window).

- Configuration of DWWD

The DWWD preload value (same as DWD preload) can only be configured when the DWWD counter is disabled. The window size and watchdog reaction to a violation can be configured even after the watchdog has been enabled. Any changes to the window size and watchdog reaction configurations will only take effect after the next servicing of the DWWD. This feature can be utilized to dynamically set windows of different sizes based on task execution time, adding a program sequence element to the diagnostic which can improve fault coverage.

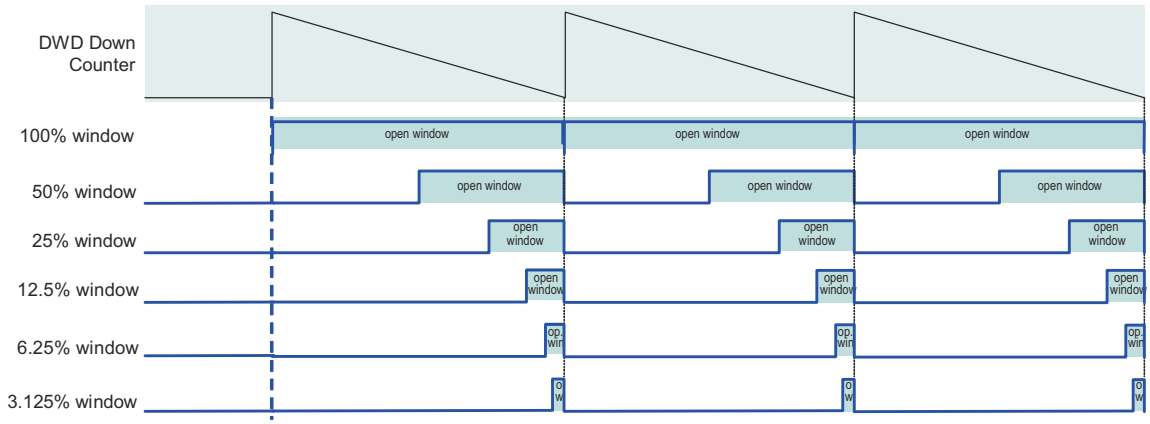

Figure 11-409. Digital Windowed Watchdog Timing Example

Copyright © 2025 Texas Instruments Incorporated

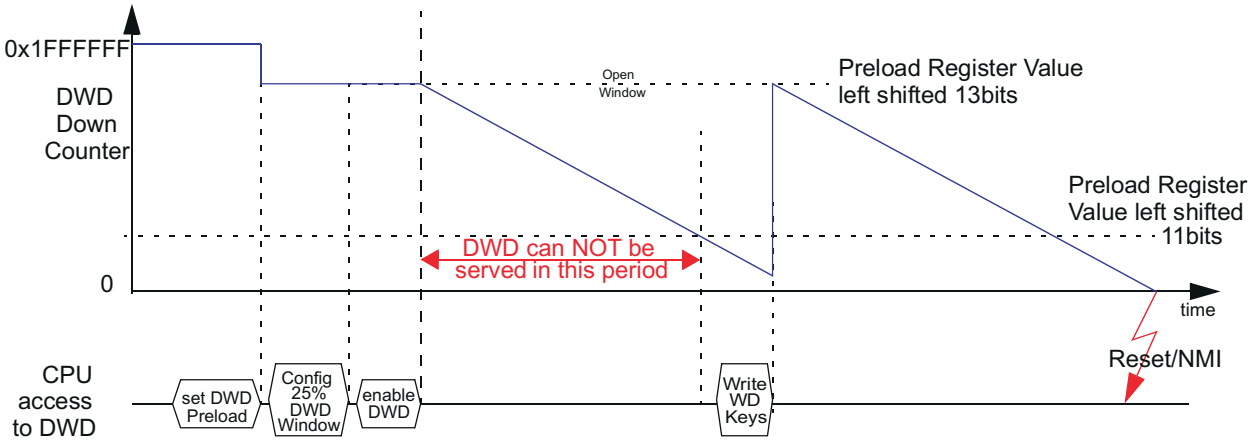

Figure 11-410. Digital Windowed Watchdog Operation Example (25% Window)

11.7.1.2.5 Halting Debug Mode Behaviour

Once the system enters halting debug mode, the behavior of the RTI depends on the COS (continue on suspend) bit. If the bit is cleared and halting debug mode is active, all counters will stop operation. If the bit is set to one, all counters will be clocked normally and the RTI will work like in normal mode. However, if the external timebase (NTU) is used and the system is in halting debug mode, the timebase control circuit will switch to internal timebase once it detects the missing NTU signal of the suspended communication controller. This will be signaled with an TBINT interrupt so that software can resynchronize after the device exits halting debug mode.

Copyright © 2025 Texas Instruments Incorporated

11.7.1.3 MSS_RTI Registers

Table 11-1539 lists the memory-mapped registers for the MSS_RTI registers. All register offset addresses not listed in Table 11-1539 should be considered as reserved locations and the register contents should not be modified.

Table 11-1539. MSS_RTI Registers

Offset	Acronym	Register Name	Section
0h	RTIGCTRL	RTIGCTRL	Go
4h	RTITBCTRL	RTITBCTRL	Go
8h	RTICAPCTRL	RTICAPCTRL	Go
Ch	RTICOMPCTRL	RTICOMPCTRL	Go
10h	RTIFRC0	RTIFRC0	Go
14h	RTIUC0	RTIUC0	Go
18h	RTICPUC0	RTICPUC0	Go
20h	RTICAFRC0	RTICAFRC0	Go
24h	RTICAUC0	RTICAUC0	Go
30h	RTIFRC1	RTIFRC1	Go
34h	RTIUC1	RTIUC1	Go
38h	RTICPUC1	RTICPUC1	Go
40h	RTICAFRC1	RTICAFRC1	Go
44h	RTICAUC1	RTICAUC1	Go
50h	RTICOMP0	RTICOMP0	Go
54h	RTIUDCP0	RTIUDCP0	Go
58h	RTICOMP1	RTICOMP1	Go
5Ch	RTIUDCP1	RTIUDCP1	Go
60h	RTICOMP2	RTICOMP2	Go
64h	RTIUDCP2	RTIUDCP2	Go
68h	RTICOMP3	RTICOMP3	Go
6Ch	RTIUDCP3	RTIUDCP3	Go
70h	RTITBLCOMP	RTITBLCOMP	Go
74h	RTITBHCOMP	RTITBHCOMP	Go
80h	RTISETINT	RTISETINT	Go
84h	RTICLEARINT	RTICLEARINT	Go
88h	RTIINTFLAG	RTIINTFLAG	Go
90h	RTIDWDCTRL	RTIDWDCTRL	Go
94h	RTIDWDPRLD	RTIDWDPRLD	Go
98h	RTIWDSTATUS	RTIWDSTATUS	Go
9Ch	RTIWDKEY	RTIWDKEY	Go
A0h	RTIDWDCNTR	RTIDWDCNTR	Go
A4h	RTIWWDRXNCTRL	RTIWWDRXNCTRL	Go
A8h	RTIWWDSIZECTRL	RTIWWDSIZECTRL	Go
ACh	RTIINTCLRENABLE	RTIINTCLRENABLE	Go
B0h	RTICOMP0CLR	RTICOMP0CLR	Go
B4h	RTICOMP1CLR	RTICOMP1CLR	Go
B8h	RTICOMP2CLR	RTICOMP2CLR	Go
BCh	RTICOMP3CLR	RTICOMP3CLR	Go

Copyright © 2025 Texas Instruments Incorporated

Complex bit access types are encoded to fit into small table cells. Table 11-1540 shows the codes that are used for access types in this section.

Table 11-1540. MSS_RTI Access Type Codes

Access Type	Code	Description
Read Type		
R	R	Read
Write Type		
W	W	Write
Reset or Default Value		
-n		Value after reset or the default value

Copyright © 2025 Texas Instruments Incorporated

11.7.1.3.1 RTIGCTRL Register (Offset = 0h) [Reset = 00000000h]

RTIGCTRL is shown in Table 11-1541.

Return to the Summary Table.

Global Control Register starts / stops the counters

Table 11-1541. RTIGCTRL Register Field Descriptions

Bit	Field	Type	Reset	Description
31-20	RESERVED	R/W	0h	Reserved. Reads return 0 and writes have no effect
19-16	NTUSEL	R/W	0h	NTUSEL: Select NTU signal. These bits determine which NTU input signal is used as external timebase. There are up to four inputs supported with four valid selection combinations. Any invalid selection value written to the NTUSEL bit-field will result in a TIED LOW being used as the NTU signal. The NTU signal will also be TIED LOW in case of a single-bit flip as it will result in an invalid combination of NTUSEL. User and privilege mode (read): 0000 = NTU0 0101 = NTU1 1010 = NTU2 1111 = NTU3 other = tied to ‘0’ Privilege mode (write): 0000 = NTU0 0101 = NTU1 1010 = NTU2 1111 = NTU3 other = tied to ‘0’
15	COS	R/W	0h	COS: Continue On Suspend. This bit determines if both counters are stopped when the device goes into debug mode or if they continue counting. User and privilege mode (read): 0 = counters are stopped while in debug mode 1 = counters are running while in debug mode Privilege mode (write): 0 = stop counters in debug mode 1 = continue counting in debug mode
14-2	RESERVED	R/W	0h	Reserved. Reads return 0 and writes have no effect
1	CNT1EN	R/W	0h	CNT1EN: Counter 1 Enable. The CNT1EN bit starts and stops the operation of counter block 1 (UC1 and FRC1). User and privilege mode (read): 0 = counters are stopped 1 = counters are running Privilege mode (write): 0 = stop counters 1 = start counters Gives the absolute 32 bit destination address (physical).
0	CNT0EN	R/W	0h	CNT0EN: Counter 0 Enable.The CNT0EN bit starts and stops the operation of counter block 0 (UC0 and FRC0). User and privilege mode (read): 0 = counters are stopped 1 = counters are running Privilege mode (write): 0 = stop counters 1 = start counters Gives the absolute 32 bits source address (physical).

Copyright © 2025 Texas Instruments Incorporated

11.7.1.3.2 RTITBCTRL Register (Offset = 4h) [Reset = 00000000h]

RTITBCTRL is shown in Table 11-1542.

Return to the Summary Table.

Timebase Control selection which source triggers free running counter 0

Table 11-1542. RTITBCTRL Register Field Descriptions

Bit	Field	Type	Reset	Description
31-2	RESERVED	R/W	0h	Reserved
1	INC	R/W	0h	INC: Increment Free Running Counter 0. This bit determines wether the Free Running Counter 0 is automatically incremented if a failing clock on the NTUx signal is detected. User and privilege mode (read): 0 = FRC0 will not be incremented 1 = FRC0 will be incremented Privilege mode (write): 0 = Do not increment FRC0 on failing external clock 1 = Increment FRC0 on failing external clock
0	TBEXT	R/W	0h	TBEXT: Timebase External. The Timebase External bit selects whether the Free Running Counter 0 is clocked by the internal Up Counter 0 or from the external signal NTUx. Since setting the TBEXT bit to 1 resets Up Counter 0, Free Running Counter 0 will not be incremented in this occurence. The only source which is able to increment Free Running Counter 0 is NTUx. When the Timebase Supervisor circuit detects a missing clockedge, then the TBEXT bit is reset. The selection if the external signal should be used, can only be done by software. User and privilege mode (read): 0 = UC0 clocks FRC0 1 = NTUx clocks FRC0 Privilege mode (write): 0 = MUX is switched to internal UC0 clocking scheme 1 = MUX is switched to external NTUx clocking scheme

Copyright © 2025 Texas Instruments Incorporated

11.7.1.3.3 RTICAPCTRL Register (Offset = 8h) [Reset = 00000000h]

RTICAPCTRL is shown in Table 11-1543.

Return to the Summary Table.

Capture Control controls the capture source for the counters

Table 11-1543. RTICAPCTRL Register Field Descriptions

Bit	Field	Type	Reset	Description
31-2	RESERVED	R/W	0h	Reserved. Reads return 0 and writes have no effect
1	CAPCNTR1	R/W	0h	CAPCNTR 1: Capture Counter 1. This bit determines, which external interrupt source triggers a capture event of both UC1 and FRC1. User and privilege mode (read): 0 = capture event is triggered by Capture Event Source 0 1 = capture event is triggered by Capture Event Source 1 Privilege mode (write): 0 = enable capture event triggered by Capture Event Source 0 1 = enable capture event triggered by Capture Event Source 1
0	CAPCNTR0	R/W	0h	CAPCNTR 0: Capture Counter 0. This bit determines, which external interrupt source triggers a capture event of both UC0 and FRC0. User and privilege mode (read): 0 = capture event is triggered by Capture Event Source 0 1 = capture event is triggered by Capture Event Source 1 Privilege mode (write): 0 = enable capture event triggered by Capture Event Source 0 1 = enable capture event triggered by Capture Event Source 1 11 indexed 10 reserved 01 post-increment 00 constant

Copyright © 2025 Texas Instruments Incorporated

11.7.1.3.4 RTICOMPCTRL Register (Offset = Ch) [Reset = 00000000h]

RTICOMPCTRL is shown in Table 11-1544.

Return to the Summary Table.

Compare Control controls the source for the compare registers

Table 11-1544. RTICOMPCTRL Register Field Descriptions

Bit	Field	Type	Reset	Description
31-13	RESERVED	R/W	0h	Reserved. Reads return 0 and writes have no effect
12	COMP3SEL	R/W	0h	COMPSEL 3: Compare Select 3. This bit determines the counter with which the compare value hold in compare register 3 is compared. User and privilege mode (read): 0 = value will be compared with FRC 0 1 = value will be compared with FRC 1 Privilege mode (write): 0 = enable compare with FRC 0 1 = enable compare with FRC 1
11-9	RESERVED	R/W	0h	Reserved. Reads return 0 and writes have no effect
8	COMP2SEL	R/W	0h	COMPSEL 2: Compare Select 2. This bit determines the counter with which the compare value hold in compare register 2 is compared. User and privilege mode (read): 0 = value will be compared with FRC 0 1 = value will be compared with FRC 1 Privilege mode (write): 0 = enable compare with FRC 0 1 = enable compare with FRC 1
7-5	RESERVED	R/W	0h	Reserved. Reads return 0 and writes have no effect
4	COMP1SEL	R/W	0h	COMPSEL 1: Compare Select 1. This bit determines the counter with which the compare value hold in compare register 1 is compared. User and privilege mode (read): 0 = value will be compared with FRC 0 1 = value will be compared with FRC 1 Privilege mode (write): 0 = enable compare with FRC 0 1 = enable compare with FRC 1
3-1	RESERVED	R/W	0h	Reserved. Reads return 0 and writes have no effect
0	COMP0SEL	R/W	0h	COMPSEL 0: Compare Select 0. This bit determines the counter with which the compare value hold in compare register 0 is compared. User and privilege mode (read): 0 = value will be compared with FRC 0 1 = value will be compared with FRC 1 Privilege mode (write): 0 = enable compare with FRC 0 1 = enable compare with FRC 1

Copyright © 2025 Texas Instruments Incorporated

11.7.1.3.5 RTIFRC0 Register (Offset = 10h) [Reset = 00000000h]

RTIFRC0 is shown in Table 11-1545.

Return to the Summary Table.

Free Running Counter 0 current value of free running counter 0

Table 11-1545. RTIFRC0 Register Field Descriptions

Bit	Field	Type	Reset	Description
31-0	FRC0	R/W	0h	FRC0: Free Running Counter 0. This registers holds the current value of the Free Running Counter 0 and will be updated continuously. User and privilege mode (read): current value of the counter Privilege mode (write): The counter can be preset by writing to this register. The counter increments then from this written value upwards. Note: Presetting counters If counters have to be preset, they have to be stopped from counting in the RTIGCTRL register in order to ensure consistency between RTIUC0 and RTIFRC0.

Copyright © 2025 Texas Instruments Incorporated

11.7.1.3.6 RTIUC0 Register (Offset = 14h) [Reset = 00000000h]

RTIUC0 is shown in Table 11-1546.

Return to the Summary Table.

Up Counter 0 current value of prescale counter 0

Table 11-1546. RTIUC0 Register Field Descriptions

Bit	Field	Type	Reset	Description
31-0	UC0	R/W	0h	UC0: Up Counter 0. This registers holds the current value of the Up Counter 0 and prescales the RTI clock. It will be only updated by a previous read of Free Running Counter 0. This gives effectively a 64 bit read of both counters, without having the problem of a counter being updated between two consecutive reads on Up Counter 0 and Free Running Counter 0. User and privilege mode (read): value of the counter when the Free Running Counter 0 was read Privilege mode (write): the counter can be preset by writing to this register. The counter increments then from this written value upwards. Note: Presetting counters If counters have to be preset, they have to be stopped from counting in the RTIGCTRL register in order to ensure consistency between RTIUC0 and RTIFRC0. Note: Preset value concern If the preset value is bigger than the compare value stored in register RTICPUC0 then it can take a long time until a compare matches, since RTIUC0 has to count up until it overflows.

Copyright © 2025 Texas Instruments Incorporated

11.7.1.3.7 RTICPUC0 Register (Offset = 18h) [Reset = 00000000h]

RTICPUC0 is shown in Table 11-1547.

Return to the Summary Table.

Compare Up Counter 0 compare value compared with prescale counter 0

Table 11-1547. RTICPUC0 Register Field Descriptions

Bit	Field	Type	Reset	Description
31-0	CPUC0	R/W	0h	This registers holds the compare value, which is compared with the Up Counter 0. When the compare matches, Free Running counter 0 is incremented. The Up Counter is set to zero when the counter value matches the CPUC0 value. The value set in this prescales the RTI clock. If CPUC 0 = 0: then, frequency = RTICLK/ (2^{32}) If CPUC0 ≠ 0: then , frequency = RTICLK/(CPUC0 + 1) User and privilege mode (read): current compare value Privilege mode (write when TBEXT = 0): the compare value is updated Privilege mode (write when TBEXT = 1): the compare value is not changed

Copyright © 2025 Texas Instruments Incorporated

11.7.1.3.8 RTICAFRC0 Register (Offset = 20h) [Reset = 00000000h]

RTICAFRC0 is shown in Table 11-1548.

Return to the Summary Table.

Capture Free Running Counter 0 current value of free running counter 0 on external event

Table 11-1548. RTICAFRC0 Register Field Descriptions

Bit	Field	Type	Reset	Description
31-0	CAFRC0	R/W	0h	CAFRC0: Capture Free Running Counter 0. This registers captures the current value of the Free Running Counter 0 when a event occurs, controlled by the external capture control block. User and privilege mode (read): value of Free Running Counter 0 on a capture event

Copyright © 2025 Texas Instruments Incorporated

11.7.1.3.9 RTICAUC0 Register (Offset = 24h) [Reset = 00000000h]

RTICAUC0 is shown in Table 11-1549.

Return to the Summary Table.

Capture Up Counter 0 current value of prescale counter 0 on external event

Table 11-1549. RTICAUC0 Register Field Descriptions

Bit	Field	Type	Reset	Description
31-0	CAUC0	R/W	0h	CAUC0: Capture Up Counter 0. This registers captures the current value of the Up Counter 0 when a event occurs, controlled by the external capture control block. The read sequence has to be the same as with Up Counter 0 and Free Running Counter 0. So the RTICAFRC0 register has to be read first, before the RTICAUC0 register is read. This sequence ensures that the value of the RTICAUC0 register is the corresponding value to the RTICAFRC0 register, even if another capture event happens in between the two reads. User and privilege mode (read): value of Up Counter 0 on a capture event

Copyright © 2025 Texas Instruments Incorporated

11.7.1.3.10 RTIFRC1 Register (Offset = 30h) [Reset = 00000000h]

RTIFRC1 is shown in Table 11-1550.

Return to the Summary Table.

Free Running Counter 1 current value of free running counter 1

Table 11-1550. RTIFRC1 Register Field Descriptions

Bit	Field	Type	Reset	Description
31-0	FRC1	R/W	0h	FRC1: Free Running Counter 1. This registers holds the current value of the Free Running Counter 1 and will be updated continuously. User and privilege mode (read): current value of the counter Privilege mode (write): The counter can be preset by writing to this register. The counter increments then from this written value upwards. Note: Presetting counters If counters have to be preset, they have to be stopped from counting in the RTIGCTRL register in order to ensure consistency between RTIUC1 and RTIFRC1.

Copyright © 2025 Texas Instruments Incorporated

11.7.1.3.11 RTIUC1 Register (Offset = 34h) [Reset = 00000000h]

RTIUC1 is shown in Table 11-1551.

Return to the Summary Table.

Up Counter 1 current value of prescale counter 1

Table 11-1551. RTIUC1 Register Field Descriptions

Bit	Field	Type	Reset	Description
31-0	UC1	R/W	0h	UC1: Up Counter 1. This registers holds the current value of the Up Counter 1 and prescales the RTI clock. It will be only updated by a previous read of Free Running Counter 1. This gives effectively a 64 bit read of both counters, without having the problem of a counter being updated between two consecutive reads on Up Counter 1 and Free Running Counter 1. User and privilege mode (read): value of the counter when the Free Running Counter 1 was read Privilege mode (write): the counter can be preset by writing to this register. The counter increments then from this written value upwards. Note: Presetting counters If counters have to be preset, they have to be stopped from counting in the RTIGCTRL register in order to ensure consistency between RTIUC1 and RTIFRC1. Note: Preset value concern If the preset value is bigger than the compare value stored in register RTICPUC1 then it can take a long time until a compare matches, since RTIUC1 has to count up until it overflows.

Copyright © 2025 Texas Instruments Incorporated

11.7.1.3.12 RTICPUC1 Register (Offset = 38h) [Reset = 00000000h]

RTICPUC1 is shown in Table 11-1552.

Return to the Summary Table.

Compare Up Counter 1 compare value compared with prescale counter 1

Table 11-1552. RTICPUC1 Register Field Descriptions

Bit	Field	Type	Reset	Description
31-0	CPUC1	R/W	0h	This registers holds the compare value, which is compared with the Up Counter 1. When the compare matches, Free Running Counter 1 is incremented. The Up Counter is set to zero when the counter value matches the CPUC1 value. The value set in this prescales the RTI clock. If CPUC 1 = 0: then, frequency = RTICLK/ (2^{32}) If CPUC1 ≠ 0: then , frequency = RTICLK/(CPUC1 + 1) User and privilege mode (read): current compare value Privilege mode (write when TBEXT = 0): the compare value is updated Privilege mode (write when TBEXT = 1): the compare value is not changed

Copyright © 2025 Texas Instruments Incorporated

11.7.1.3.13 RTICAFRC1 Register (Offset = 40h) [Reset = 00000000h]

RTICAFRC1 is shown in Table 11-1553.

Return to the Summary Table.

Capture Free Running Counter 1 current value of free running counter 1 on external event

Table 11-1553. RTICAFRC1 Register Field Descriptions

Bit	Field	Type	Reset	Description
31-0	CAFRC1	R/W	0h	CAFRC1: Capture Free Running Counter 1. This registers captures the current value of the Free Running Counter 1 when a event occurs, controlled by the external capture control block. User and privilege mode (read): value of Free Running Counter 1 on a capture event

Copyright © 2025 Texas Instruments Incorporated

11.7.1.3.14 RTICAUC1 Register (Offset = 44h) [Reset = 00000000h]

RTICAUC1 is shown in Table 11-1554.

Return to the Summary Table.

Capture Up Counter 1 current value of prescale counter 1 on external event

Table 11-1554. RTICAUC1 Register Field Descriptions

Bit	Field	Type	Reset	Description
31-0	CAUC1	R/W	0h	CAUC1: Capture Up Counter 1. This registers captures the current value of the Up Counter 1 when a event occurs, controlled by the external capture control block. The read sequence has to be the same as with Up Counter 1 and Free Running Counter 1. So the RTICAFRC1 register has to be read first, before the RTICAUC1 register is read. This sequence ensures that the value of the RTICAUC1 register is the corresponding value to the RTICAFRC1 register, even if another capture event happens in between the two reads. User and privilege mode (read): value of Up Counter 1 on a capture event

Copyright © 2025 Texas Instruments Incorporated

11.7.1.3.15 RTICOMP0 Register (Offset = 50h) [Reset = 00000000h]

RTICOMP0 is shown in Table 11-1555.

Return to the Summary Table.

Compare 0 compare value to be compared with the counters

Table 11-1555. RTICOMP0 Register Field Descriptions

Bit	Field	Type	Reset	Description
31-0	COMP0	R/W	0h	COMP0: Compare 0. This registers holds a compare value, which is compared with the counter selected in the compare control logic. If the Free Running Counter matches the compare value, an interrupt is flagged. With this register it is also possible to initiate a DMA request. User and privilege mode (read): current compare value Privilege mode (write): update of the compare register with a new compare value Note: Reset behavior A reset does not generate a compare match, since the compare logic will only be active, when the associated counter block is enabled.

Copyright © 2025 Texas Instruments Incorporated

11.7.1.3.16 RTIUDCP0 Register (Offset = 54h) [Reset = 00000000h]

RTIUDCP0 is shown in Table 11-1556.

Return to the Summary Table.

Update Compare 0 value to be added to the compare register 0 value on compare match

Table 11-1556. RTIUDCP0 Register Field Descriptions

Bit	Field	Type	Reset	Description
31-0	UDCP0	R/W	0h	UDCP0: Update Compare 0 Register. This registers holds a value, which is added to the value in the compare 0 register each time a compare matches. This gives the possibility to generate periodic interrupts without software intervention. User and privilege mode (read): value to be added to the compare 0 register on the next compare match Privilege mode (write): new update value

Copyright © 2025 Texas Instruments Incorporated

11.7.1.3.17 RTICOMP1 Register (Offset = 58h) [Reset = 00000000h]

RTICOMP1 is shown in Table 11-1557.

Return to the Summary Table.

Compare 1 compare value to be compared with the counters

Table 11-1557. RTICOMP1 Register Field Descriptions

Bit	Field	Type	Reset	Description
31-0	COMP1	R/W	0h	COMP1: compare1. This registers holds a compare value, which is compared with the counter selected in the compare control logic. If the Free Running Counter matches the compare value, an interrupt is flagged. With this register it is also possible to initiate a DMA request. User and privilege mode (read): current compare value Privilege mode (write): update of the compare register with a new compare value Note: Reset behavior A reset does not generate a compare match, since the compare logic will only be active, when the associated counter block is enabled.

Copyright © 2025 Texas Instruments Incorporated

11.7.1.3.18 RTIUDCP1 Register (Offset = 5Ch) [Reset = 00000000h]

RTIUDCP1 is shown in Table 11-1558.

Return to the Summary Table.

Update Compare 1 value to be added to the compare register 1 value on compare match

Table 11-1558. RTIUDCP1 Register Field Descriptions

Bit	Field	Type	Reset	Description
31-0	UDCP1	R/W	0h	UDCP1: Update compare1 Register. This registers holds a value, which is added to the value in the compare1 register each time a compare matches. This gives the possibility to generate periodic interrupts without software intervention. User and privilege mode (read): value to be added to the compare1 register on the next compare match Privilege mode (write): new update value

Copyright © 2025 Texas Instruments Incorporated

11.7.1.3.19 RTICOMP2 Register (Offset = 60h) [Reset = 00000000h]

RTICOMP2 is shown in Table 11-1559.

Return to the Summary Table.

Compare 2 compare value to be compared with the counters

Table 11-1559. RTICOMP2 Register Field Descriptions

Bit	Field	Type	Reset	Description
31-0	COMP2	R/W	0h	COMP2: compare 2. This registers holds a compare value, which is compared with the counter selected in the compare control logic. If the Free Running Counter matches the compare value, an interrupt is flagged. With this register it is also possible to initiate a DMA request. User and privilege mode (read): current compare value Privilege mode (write): update of the compare register with a new compare value Note: Reset behavior A reset does not generate a compare match, since the compare logic will only be active, when the associated counter block is enabled.

Copyright © 2025 Texas Instruments Incorporated

11.7.1.3.20 RTIUDCP2 Register (Offset = 64h) [Reset = 00000000h]

RTIUDCP2 is shown in Table 11-1560.

Return to the Summary Table.

Update Compare 2 value to be added to the compare register 2 value on compare match

Table 11-1560. RTIUDCP2 Register Field Descriptions

Bit	Field	Type	Reset	Description
31-0	UDCP2	R/W	0h	UDCP2: Update compare 2 Register. This registers holds a value, which is added to the value in the compare 2 register each time a compare matches. This gives the possibility to generate periodic interrupts without software intervention. User and privilege mode (read): value to be added to the compare 2 register on the next compare match Privilege mode (write): new update value

Copyright © 2025 Texas Instruments Incorporated

11.7.1.3.21 RTICOMP3 Register (Offset = 68h) [Reset = 00000000h]

RTICOMP3 is shown in Table 11-1561.

Return to the Summary Table.

Compare 3 compare value to be compared with the counters

Table 11-1561. RTICOMP3 Register Field Descriptions

Bit	Field	Type	Reset	Description
31-0	COMP3	R/W	0h	COMP3: compare 3. This registers holds a compare value, which is compared with the counter selected in the compare control logic. If the Free Running Counter matches the compare value, an interrupt is flagged. With this register it is also possible to initiate a DMA request. User and privilege mode (read): current compare value Privilege mode (write): update of the compare register with a new compare value Note: Reset behavior A reset does not generate a compare match, since the compare logic will only be active, when the associated counter block is enabled.

Copyright © 2025 Texas Instruments Incorporated

11.7.1.3.22 RTIUDCP3 Register (Offset = 6Ch) [Reset = 00000000h]

RTIUDCP3 is shown in Table 11-1562.

Return to the Summary Table.

Update Compare 3 value to be added to the compare register 3 value on compare match

Table 11-1562. RTIUDCP3 Register Field Descriptions

Bit	Field	Type	Reset	Description
31-0	UDCP3	R/W	0h	UDCP3: Update compare 3 Register. This registers holds a value, which is added to the value in the compare 3 register each time a compare matches. This gives the possibility to generate periodic interrupts without software intervention. User and privilege mode (read): value to be added to the compare 3 register on the next compare match Privilege mode (write): new update value

Copyright © 2025 Texas Instruments Incorporated

11.7.1.3.23 RTITBLCOMP Register (Offset = 70h) [Reset = 00000000h]

RTITBLCOMP is shown in Table 11-1563.

Return to the Summary Table.

Timebase Low Compare compare value to activate edge detection circuit

Table 11-1563. RTITBLCOMP Register Field Descriptions

Bit	Field	Type	Reset	Description
31-0	TBLCOMP	R/W	0h	TBLCOMP: Timebase Low Compare Value. This value determines when the edge detection circuit starts monitoring the NTUx signal. It will be compared with Up Counter 0. User and privilege mode (read): current compare value Privilege mode (write when TBEXT = 0): the compare value is updated Privilege mode (write when TBEXT = 1): the compare value is not changed Note: Reset behavior A reset does not generate a compare match.

Copyright © 2025 Texas Instruments Incorporated

11.7.1.3.24 RTITBHCOMP Register (Offset = 74h) [Reset = 00000000h]

RTITBHCOMP is shown in Table 11-1564.

Return to the Summary Table.

Timebase High Compare compare value to deactivate edge detection circuit

Table 11-1564. RTITBHCOMP Register Field Descriptions

Bit	Field	Type	Reset	Description
31-0	TBHCOMP	R/W	0h	TBHCOMP: Timebase High Compare Value. This value determines when the edge detection circuit will stop monitoring the NTUx signal. It will be compared with Up Counter 0. RTITBHCOMP has to be less than RTICPUC0, since RTIUC0 will be reset when RTICPUC0 is reached. Example: The NTUx edge detection circuit should be active +/- 10 RTICLK cycles around RTICPUC0. RTICPUC 0 = 0x00000050 RTITBLCOMP = 0x000046 RTITBHCOMP = 0x00000009 User and privilege mode (read): current compare value Privilege mode (write when TBEXT = 0): the compare value is updated Privilege mode (write when TBEXT = 1): the compare value is not changed Note: Reset behavior A reset does not generate a compare match.

Copyright © 2025 Texas Instruments Incorporated

11.7.1.3.25 RTISETINT Register (Offset = 80h) [Reset = 00000000h]

RTISETINT is shown in Table 11-1565.

Return to the Summary Table.

Set Interrupt Enable sets interrupt enable bits int RTIINTCTRL without having to do a read-modify-write operation

Table 11-1565. RTISETINT Register Field Descriptions

Bit	Field	Type	Reset	Description
31-19	RESERVED	R/W	0h	Reserved. Reads return 0 and writes have no effect
18	SETOVL1INT	R/W	0h	SETOVL1INT: Set Free Running Counter 1 Overflow Interrupt. User and privilege mode (read): 0 = interrupt is disabled 1 = interrupt is enabled Privilege mode (write): 0 = leaves the corresponding bit unchanged 1 = enable interrupt
17	SETOVL0INT	R/W	0h	SETOVL0INT: Set Free Running Counter 0 Overflow Interrupt. User and privilege mode (read): 0 = interrupt is disabled 1 = interrupt is enabled Privilege mode (write): 0 = leaves the corresponding bit unchanged 1 = enable interrupt
16	SETTBINT	R/W	0h	SETTBINT: Set Timebase Interrupt. User and privilege mode (read): 0 = interrupt is disabled 1 = interrupt is enabled Privilege mode (write): 0 = leaves the corresponding bit unchanged 1 = enable interrupt
15-12	RESERVED	R/W	0h	Reserved. Reads return 0 and writes have no effect
11	SETDMA3	R/W	0h	SETDMA 3: Set Compare DMA Request 3. User and privilege mode (read): 0 = DMA request is disabled 1 = DMA request is enabled Privilege mode (write): 0 = leaves the corresponding bit unchanged 1 = enable DMA request
10	SETDMA2	R/W	0h	SETDMA 2: Set Compare DMA Request 2. User and privilege mode (read): 0 = DMA request is disabled 1 = DMA request is enabled Privilege mode (write): 0 = leaves the corresponding bit unchanged 1 = enable DMA request
9	SETDMA1	R/W	0h	SETDMA 1: Set Compare DMA Request 1. User and privilege mode (read): 0 = DMA request is disabled 1 = DMA request is enabled Privilege mode (write): 0 = leaves the corresponding bit unchanged 1 = enable DMA request
8	SETDMA0	R/W	0h	SETDMA 0: Set Compare DMA Request 0. User and privilege mode (read): 0 = DMA request is disabled 1 = DMA request is enabled Privilege mode (write): 0 = leaves the corresponding bit unchanged 1 = enable DMA request
7-4	RESERVED	R/W	0h	Reserved. Reads return 0 and writes have no effect

Copyright © 2025 Texas Instruments Incorporated

Table 11-1565. RTISETINT Register Field Descriptions (continued)

Bit	Field	Type	Reset	Description
3	SETINT3	R/W	0h	SETINT 3: Set Compare Interrupt 3. User and privilege mode (read): 0 = interrupt is disabled 1 = interrupt is enabled Privilege mode (write): 0 = leaves the corresponding bit unchanged
2	SETINT2	R/W	0h	SETINT 2: Set Compare Interrupt 2. User and privilege mode (read): 0 = interrupt is disabled 1 = interrupt is enabled Privilege mode (write): 0 = leaves the corresponding bit unchanged 1 = enable interrupt
1	SETINT1	R/W	0h	SETINT 1: Set Compare Interrupt 1. User and privilege mode (read): 0 = interrupt is disabled 1 = interrupt is enabled Privilege mode (write): 0 = leaves the corresponding bit unchanged 1 = enable interrupt
0	SETINT0	R/W	0h	SETINT 0: Set Compare Interrupt 0. User and privilege mode (read): 0 = interrupt is disabled 1 = interrupt is enabled Privilege mode (write): 0 = leaves the corresponding bit unchanged 1 = enable interrupt

Copyright © 2025 Texas Instruments Incorporated

11.7.1.3.26 RTICLEARINT Register (Offset = 84h) [Reset = 00000000h]

RTICLEARINT is shown in Table 11-1566.

Return to the Summary Table.

Clear Interrupt Enable clears interrupt enable bits int RTIINTCTRL without having to do a read-modify-write operation

Table 11-1566. RTICLEARINT Register Field Descriptions

Bit	Field	Type	Reset	Description
31-19	RESERVED	R/W	0h	Reserved. Reads return 0 and writes have no effect
18	CLEAROVL1INT	R/W	0h	CLEAROVL1INT: CLEAR Free Running Counter 1 Overflow Interrupt. User and privilege mode (read): 0 = interrupt is disabled 1 = interrupt is enabled Privilege mode (write): 0 = leaves the corresponding bit unchanged 1 = disable interrupt
17	CLEAROVL0INT	R/W	0h	CLEAROVL0INT: CLEAR Free Running Counter 0 Overflow Interrupt. User and privilege mode (read): 0 = interrupt is disabled 1 = interrupt is enabled Privilege mode (write): 0 = leaves the corresponding bit unchanged 1 = disable interrupt
16	CLEARTBINT	R/W	0h	CLEARTBINT: CLEAR Timebase Interrupt. User and privilege mode (read): 0 = interrupt is disabled 1 = interrupt is enabled Privilege mode (write): 0 = leaves the corresponding bit unchanged 1 = disable interrupt
15-12	RESERVED	R/W	0h	Reserved. Reads return 0 and writes have no effect
11	CLEARDMA3	R/W	0h	CLEARDMA 3: CLEAR Compare DMA Request 3. User and privilege mode (read): 0 = DMA request is disabled 1 = DMA request is enabled Privilege mode (write): 0 = leaves the corresponding bit unchanged 1 = disable DMA request
10	CLEARDMA2	R/W	0h	CLEARDMA 2: CLEAR Compare DMA Request 2. User and privilege mode (read): 0 = DMA request is disabled 1 = DMA request is enabled Privilege mode (write): 0 = leaves the corresponding bit unchanged 1 = disable DMA request
9	CLEARDMA1	R/W	0h	CLEARDMA 1: CLEAR Compare DMA Request 1. User and privilege mode (read): 0 = DMA request is disabled 1 = DMA request is enabled Privilege mode (write): 0 = leaves the corresponding bit unchanged 1 = disable DMA request
8	CLEARDMA0	R/W	0h	CLEARDMA 0: CLEAR Compare DMA Request 0. User and privilege mode (read): 0 = DMA request is disabled 1 = DMA request is enabled Privilege mode (write): 0 = leaves the corresponding bit unchanged 1 = disable DMA request

Copyright © 2025 Texas Instruments Incorporated

Table 11-1566. RTICLEARINT Register Field Descriptions (continued)

Bit	Field	Type	Reset	Description
7-4	RESERVED	R/W	0h	Reserved. Reads return 0 and writes have no effect
3	CLEARINT3	R/W	0h	CLEARINT 3: CLEAR Compare Interrupt 3. User and privilege mode (read): 0 = interrupt is disabled 1 = interrupt is enabled Privilege mode (write): 0 = leaves the corresponding bit unchanged 1 = disable interrupt
2	CLEARINT2	R/W	0h	CLEARINT 2: CLEAR Compare Interrupt 2. User and privilege mode (read): 0 = interrupt is disabled 1 = interrupt is enabled Privilege mode (write): 0 = leaves the corresponding bit unchanged 1 = disable interrupt
1	CLEARINT1	R/W	0h	CLEARINT 1: CLEAR Compare Interrupt 1. User and privilege mode (read): 0 = interrupt is disabled 1 = interrupt is enabled Privilege mode (write): 0 = leaves the corresponding bit unchanged 1 = disable interrupt
0	CLEARINT0	R/W	0h	CLEARINT 0: CLEAR Compare Interrupt 0. User and privilege mode (read): 0 = interrupt is disabled 1 = interrupt is enabled Privilege mode (write): 0 = leaves the corresponding bit unchanged 1 = disable interrupt

Copyright © 2025 Texas Instruments Incorporated

11.7.1.3.27 RTIINTFLAG Register (Offset = 88h) [Reset = 00000000h]

RTIINTFLAG is shown in Table 11-1567.

Return to the Summary Table.

Interrupt Flags interrupt pending bits

Table 11-1567. RTIINTFLAG Register Field Descriptions

Bit	Field	Type	Reset	Description
31-19	RESERVED	R/W	0h	Reserved. Reads return 0 and writes have no effect
18	OVL1INT	R/W	0h	OVL1INT: Free Running Counter 1 Overflow Interrupt Flag. User and privilege mode (read): determines if an interrupt is pending 0 = no interrupt pending 1 = interrupt pending Privilege mode (write): 0 = leaves the bit unchanged 1 = set the bit to 0
17	OVL0INT	R/W	0h	OVL0INT: Free Running Counter 0 Overflow Interrupt Flag. User and privilege mode (read): determines if an interrupt is pending 0 = no interrupt pending 1 = interrupt pending Privilege mode (write): 0 = leaves the bit unchanged 1 = set the bit to 0
16	TBINT	R/W	0h	User and privilege mode (read): this flag is set when the TBEXT bit is cleared by detection of a missing external clockedge. It will not be set by clearing TBEXT by software. determines if an interrupt is pending 0 = no interrupt pending 1 = interrupt pending Privilege mode (write): 0 = leaves the bit unchanged 1 = set the bit to 0
15-4	RESERVED	R/W	0h	Reserved. Reads return 0 and writes have no effect
3	INT3	R/W	0h	INT 3: Interrupt Flag 3. User and privilege mode (read): determines if a interrupt is pending 0 = no interrupt pending 1 = interrupt pending Privilege mode (write): 0 = leaves the bit unchanged 1 = set the bit to 0
2	INT2	R/W	0h	INT 2: Interrupt Flag 2. User and privilege mode (read): determines if a interrupt is pending 0 = no interrupt pending 1 = interrupt pending Privilege mode (write): 0 = leaves the bit unchanged 1 = set the bit to 0
1	INT1	R/W	0h	INT 1: Interrupt Flag 1. User and privilege mode (read): determines if a interrupt is pending 0 = no interrupt pending 1 = interrupt pending Privilege mode (write): 0 = leaves the bit unchanged 1 = set the bit to 0
0	INT0	R/W	0h	INT 0: Interrupt Flag 0. User and privilege mode (read): determines if a interrupt is pending 0 = no interrupt pending 1 = interrupt pending Privilege mode (write): 0 = leaves the bit unchanged 1 = set the bit to 0

Copyright © 2025 Texas Instruments Incorporated

11.7.1.3.28 RTIDWDCTRL Register (Offset = 90h) [Reset = 00000000h]

RTIDWDCTRL is shown in Table 11-1568.

Return to the Summary Table.

Digital Watchdog Control Enables the Digital Watchdog

Table 11-1568. RTIDWDCTRL Register Field Descriptions

Bit	Field	Type	Reset	Description
31-0	DWDCTRL	R/W	0h	DWDCTRL: Digital Watchdog Control. User and priviledge mode (read): 0x5312ACED = DWD counter is disabled. This is the default value. 0xA98559DA = DWD counter is enabled Any other value = DWD counter state is unchanged (enabled or disabled) Priviledge mode (write): 0xA98559DA = DWD counter is enabled Any other value = State of DWD counter is unchanged (stays enabled or disabled) Note: One-Write Functionality of DWDCTRL Register The RTIDWDCTRL register implements a one-write functionality, such that the application cannot write to this registermore than once. Writing the default value will not enable the watchdog as described above. Writing the enable value will start the watchdog counters. A write to RTIDWDCTRL will only be enabled after a system reset again.

Copyright © 2025 Texas Instruments Incorporated

11.7.1.3.29 RTIDWDPRLD Register (Offset = 94h) [Reset = 00000000h]

RTIDWDPRLD is shown in Table 11-1569.

Return to the Summary Table.

Digital Watchdog Preload sets the experation time of the Digital Watchdog

Table 11-1569. RTIDWDPRLD Register Field Descriptions

Bit	Field	Type	Reset	Description
31-12	RESERVED	R/W	0h	Reserved. Reads return 0 and writes have no effect
11-0	DWDPRLD	R/W	0h	DWDPRLD: Digital Watchdog Preload Value. User and priviledge mode (read): A read from this register in any CPU mode returns the current preload value. Priviledge mode (write): If the DWD is always enabled after reset is released: The DWD starts counting down from the reset value of the counter, that is, 0x002DFFFF. The application can configure the DWD preload register any time before this down counter expires. When the application services the DWD, the preload register contents are copied left-justified into the DWD down counter and it starts counting down from that value. If the DWD is implemented such that the down counter is enabled by software: The DWD preload register can be configured only when the DWD is disabled. Therefore, the application can only configure the DWD preload register before it enables the DWD down counter. The expiration time of the DWD Down Counter can be determined with following equation: texp = (RTIDWDPRLD+1) x 2^{13} / RTICLK1 where: RTIDWDPRLD = 0...4095

Copyright © 2025 Texas Instruments Incorporated

11.7.1.3.30 RTIWDSTATUS Register (Offset = 98h) [Reset = 00000000h]

RTIWDSTATUS is shown in Table 11-1570.

Return to the Summary Table.

Watchdog Status reflects the status of Analog and Digital Watchdog

Table 11-1570. RTIWDSTATUS Register Field Descriptions

Bit	Field	Type	Reset	Description
31-6	RESERVED	R/W	0h	Reserved. Reads return 0 and writes have no effect
5	DWWD_ST	R/W	0h	DWWD ST: Windowed Watchdog Status. This bit denotes whether the time-window defined by the windowed watchdog configuration has been violated, or if a wrong key or key sequence was written to service the watchdog. User and priviledge mode (read): 0 = no time-window violation has occurred. 1 = a time-window violation has occurred. The watchdog will generate either a system reset or a non-maskable interrupt to the CPU in this case. Priviledge mode (write): 0 = leaves the current value unchanged. 1 = clears the bit to 0. This will also clear all other status flags in the RTIWDSTATUS register except for the AWD ST flag. Clearing of the status flags will deassert the non-maskable interrupt generated due to violation of the DWWD.
4	ENDTIMEVIOL	R/W	0h	END TIME VIOL: Windowed Watchdog End Time Violation Status. This bit denotes whether the end-time defined by the windowed watchdog configuration has been violated. This bit is effectively a copy of the DWD ST status flag. User and priviledge mode (read): 0 = no end-time window violation has occurred. 1 = the end-time defined by the windowed watchdog configuration has been violated. Priviledge mode (write): 0 = leaves the current value unchanged. 1 = clears the bit to 0.
3	STARTTIMEVIOL	R/W	0h	START TIME VIOL: Windowed Watchdog Start Time Violation Status. This bit denotes whether the start-time defined by the windowed watchdog configuration has been violated. This indicates that the WWD was serviced before the service window was opened. User and priviledge mode (read): 0 = no start-time window violation has occurred. 1 = the start-time defined by the windowed watchdog configuration has been violated. Priviledge mode (write): 0 = leaves the current value unchanged. 1 = clears the bit to 0.
2	KEYST	R/W	0h	KEYST: Watchdog KeyStatus. This bit denotes a reset generated by a wrong key or a wrong key-sequence written to the RTIWDKEY register. User and priviledge mode (read): 0 = no wrong key or key-sequence written 1 = wrong key or key-sequence written to RTIWDKEY register Priviledge mode (write): 0 = leaves the current value unchanged 1 = clears the bit to 0

Copyright © 2025 Texas Instruments Incorporated

Table 11-1570. RTIWDSTATUS Register Field Descriptions (continued)

Bit	Field	Type	Reset	Description
1	DWDST	R/W	0h	DWDST: Digital Watchdog Status. This bit is effectively a copy of the END TIME VIOL status flag and is maintained for compatibility reasons. User and priviledge mode (read): 0 = DWD timeout period not expired 1 = DWD timeout period has expired Priviledge mode (write): 0 = leaves the current value unchanged 1 = clears the bit to 0
0	AWDST	R/W	0h	AWDST: Analog Watchdog Status. User and priviledge mode (read): 0 = AWD pin 0 –> 1 threshold not exceeded 1 = AWD pin 0 –> 1 threshold exceeded Priviledge mode (write): 0 = leaves the current value unchanged 1 = clears the bit to 0

Copyright © 2025 Texas Instruments Incorporated

11.7.1.3.31 RTIWDKEY Register (Offset = 9Ch) [Reset = 00000000h]

RTIWDKEY is shown in Table 11-1571.

Return to the Summary Table.

Watchdog Key correct written key values discharge the external capacitor

Table 11-1571. RTIWDKEY Register Field Descriptions

Bit	Field	Type	Reset	Description
31-16	RESERVED	R/W	0h	Reserved. Reads return 0 and writes have no effect
15-0	WDKEY	R/W	0h	WDKEY: Watchdog Key. User and privilege mode reads are indeterminate. Privilege mode (write): A write of 0xE51A followed by 0xA35C in two separate write operations defines the Key Sequence and discharges the watchdog capacitor. This also causes the upper 12 bits of the DWD down counter to be reloaded with the contents of the DWD preload register and the lower 13 bits to become all 1's. Writing any other value causes a digital watchdog reset, as shown in Table 1-3. Note: Register write access time precaution The user has to take into account that the write to the register takes 3 VCLK cycle. This needs to be considered for the AWD/DWD expiration calculation.

Copyright © 2025 Texas Instruments Incorporated

11.7.1.3.32 RTIDWDCNTR Register (Offset = A0h) [Reset = 00000000h]

RTIDWDCNTR is shown in Table 11-1572.

Return to the Summary Table.

Digital Watchdog Down Counter current value of DWD down counter

Table 11-1572. RTIDWDCNTR Register Field Descriptions

Bit	Field	Type	Reset	Description
31-25	RESERVED	R/W	0h	Reserved. Reads return 0 and writes have no effect
24-0	DWDCNTR	R/W	0h	DWDCNTR: Digital Watchdog Down Counter. The value of the DWDCNTR after a system reset is 0x002D_FFFF. When the DWD is enabled and the DWD counter starts counting down from this value with an RTICLK1 time base of 3MHz, a watchdog reset will be generated in 1 second. User and privilege mode (read): Reads return the current counter value. Privilege mode (write): Writes don't have an effect.

Copyright © 2025 Texas Instruments Incorporated

11.7.1.3.33 RTIWWDRXNCTRL Register (Offset = A4h) [Reset = 00000000h]

RTIWWDRXNCTRL is shown in Table 11-1573.

Return to the Summary Table.

Windowed Watchdog Reaction Control configures the windowed watchdog to either generate a non-maskable interrupt to the CPU or to generate a system reset

Table 11-1573. RTIWWDRXNCTRL Register Field Descriptions

Bit	Field	Type	Reset	Description
31-4	RESERVED	R/W	0h	Reserved. Reads return 0 and writes have no effect
3-0	WWDRXN	R/W	0h	WWDRXN: Digital Windowed Watchdog Reaction. User and privilege mode (read), privileged mode (write): 0x 5 = This is the default value. The windowed watchdog will cause a reset if the watchdog is serviced outside the time window defined by the configuration, or if the watchdog is not serviced at all. 0xA = The windowed watchdog will generate a non-maskable interrupt to the CPU if the watchdog is serviced outside the time window defined by the configuration, or if the watchdog is not serviced at all. Writing any other value will cause a system reset if the watchdog is serviced outside the time window defined by the configuration, or if the watchdog is not serviced at all. Note: Configuration of DWWD Reaction The DWWD reaction can be selected by the application even when the DWWD counter is already enabled. If a change to the WWDRXN is made before the watchdog service window is opened, then the change in the configuration takes effect immediately. If a change to the WWDRXN is made when the watchdog service window is already open, then the change in configuration takes effect only after the watchdog is serviced.

Copyright © 2025 Texas Instruments Incorporated

11.7.1.3.34 RTIWWDSIZECTRL Register (Offset = A8h) [Reset = 00000000h]

RTIWWDSIZECTRL is shown in Table 11-1574.

Return to the Summary Table.

Windowed Watchdog Size Control configures the size of the window for the digital windowed watchdog

Table 11-1574. RTIWWDSIZECTRL Register Field Descriptions

Bit	Field	Type	Reset	Description
31-0	WWDSIZE	R/W	0h	WWDSIZE: Digital Windowed Watchdog Window Size. User and privilege mode (read), privileged mode (write): Value written to WWDSIZE Window Size 0x00000005 100% (Functionality same as the time-out digital watchdog.) 0x00000050 50% 0x00000500 25% 0x00005000 12.5% 0x00050000 6.25% 0x00500000 3.125% Any other value 3.125% Note: Incorrect value being written to watchdog window size control register If an incorerct value is written to the WWDSIZE field, or if a system disturbance causes the WWDSIZE field to have a value other than 0x5, 0x50, 0x500, 0x5000, 0x50000, or 0x500000, then the window size will be configured to be 3.125%. This increases the chances of getting a reset due to the windowed watchdog, which enables the system to handle the cause for the incorrect configuration. Note: Configuration of DWWD Window Size The DWWD window size can be selected by the application even when the DWWD counter is already enabled. If a change to the WWDSIZE is made before the watchdog service window is opened, then the change in the configuration takes effect immediately. If a change to the WWDSIZE is made when the watchdog service window is already open, then

Copyright © 2025 Texas Instruments Incorporated

11.7.1.3.35 RTIINTCLRENABLE Register (Offset = ACh) [Reset = 00000000h]

RTIINTCLRENABLE is shown in Table 11-1575.

Return to the Summary Table.

RTI Compare Interrupt Clear Enable enable the auto clear functionality for each of the compare interrupts

Table 11-1575. RTIINTCLRENABLE Register Field Descriptions

Bit	Field	Type	Reset	Description
31-28	RESERVED	R/W	0h	Reserved. Reads return 0 and writes have no effect
27-24	INTCLRENABLE3	R/W	0h	INTCLRENABLE3. Enables the auto-clear functionality on the compare 3 interrupt. User and Privileged mode (read): 0x 5 = Auto-clear for compare 3 interrupt is disabled. Any other value = Auto-clear for compare 3 interrupt is enabled. Privileged mode (write): 0x 5 = Disables the auto-clear functionality on the compare 3 interrupt. Any other value = Enables the auto-clear functionality on the compare 3 interrupt.
23-20	RESERVED	R/W	0h	Reserved. Reads return 0 and writes have no effect
19-16	INTCLRENABLE2	R/W	0h	INTCLRENABLE2. Enables the auto-clear functionality on the compare 2 interrupt. User and Privileged mode (read): 0x 5 = Auto-clear for compare 2 interrupt is disabled. Any other value = Auto-clear for compare 2 interrupt is enabled. Privileged mode (write): 0x 5 = Disables the auto-clear functionality on the compare 2 interrupt. Any other value = Enables the auto-clear functionality on the compare 2 interrupt.
15-12	RESERVED	R/W	0h	Reserved. Reads return 0 and writes have no effect
11-8	INTCLRENABLE1	R/W	0h	INTCLRENABLE1. Enables the auto-clear functionality on the compare 1 interrupt. User and Privileged mode (read): 0x 5 = Auto-clear for compare 1 interrupt is disabled. Any other value = Auto-clear for compare 1 interrupt is enabled. Privileged mode (write): 0x 5 = Disables the auto-clear functionality on the compare 1 interrupt. Any other value = Enables the auto-clear functionality on the compare 1 interrupt.
7-4	RESERVED	R/W	0h	Reserved. Reads return 0 and writes have no effect
3-0	INTCLRENABLE0	R/W	0h	INTCLRENABLE0. Enables the auto-clear functionality on the compare 0 interrupt. User and Privileged mode (read): 0x 5 = Auto-clear for compare 0 interrupt is disabled. Any other value = Auto-clear for compare 0 interrupt is enabled. Privileged mode (write): 0x 5 = Disables the auto-clear functionality on the compare 0 interrupt. Any other value = Enables the auto-clear functionality on the compare 0 interrupt.

Copyright © 2025 Texas Instruments Incorporated

11.7.1.3.36 RTICOMP0CLR Register (Offset = B0h) [Reset = 00000000h]

RTICOMP0CLR is shown in Table 11-1576.

Return to the Summary Table.

Compare 0 Clear compare value to be compared with the counter to clear the compare0 interrupt line

Table 11-1576. RTICOMP0CLR Register Field Descriptions

Bit	Field	Type	Reset	Description
31-0	COMP0CLR	R/W	0h	COMP0CLR: Compare 0 Clear. This registers holds a compare value, which is compared with the counter selected in the compare control logic. If the Free Running Counter matches the compare value, the compare 0 interrupt or DMA request line is cleared. User and privilege mode (read): current compare value Privilege mode (write): update of the compare register with a new compare value Note: Reset behavior A reset does not generate a compare match, since the compare logic will only be active, when the associated counter block is enabled.

Copyright © 2025 Texas Instruments Incorporated

11.7.1.3.37 RTICOMP1CLR Register (Offset = B4h) [Reset = 00000000h]

RTICOMP1CLR is shown in Table 11-1577.

Return to the Summary Table.

Compare 1 Clear compare value to be compared with the counter to clear the compare1 interrupt line

Table 11-1577. RTICOMP1CLR Register Field Descriptions

Bit	Field	Type	Reset	Description
31-0	COMP1CLR	R/W	0h	COMP1CLR: Compare 1 Clear. This registers holds a compare value, which is compared with the counter selected in the compare control logic. If the Free Running Counter matches the compare value, the Compare 1 interrupt or DMA request line is cleared. User and privilege mode (read): current compare value Privilege mode (write): update of the compare register with a new compare value Note: Reset behavior A reset does not generate a compare match, since the compare logic will only be active, when the associated counter block is enabled.

Copyright © 2025 Texas Instruments Incorporated

11.7.1.3.38 RTICOMP2CLR Register (Offset = B8h) [Reset = 00000000h]

RTICOMP2CLR is shown in Table 11-1578.

Return to the Summary Table.

Compare 2 Clear compare value to be compared with the counter to clear the compare2 interrupt line

Table 11-1578. RTICOMP2CLR Register Field Descriptions

Bit	Field	Type	Reset	Description
31-0	COMP2CLR	R/W	0h	COMP2CLR: Compare 2 Clear. This registers holds a compare value, which is compared with the counter selected in the compare control logic. If the Free Running Counter matches the compare value, the Compare 2 interrupt or DMA request line is cleared. User and privilege mode (read): current compare value Privilege mode (write): update of the compare register with a new compare value Note: Reset behavior A reset does not generate a compare match, since the compare logic will only be active, when the associated counter block is enabled.

Copyright © 2025 Texas Instruments Incorporated

11.7.1.3.39 RTICOMP3CLR Register (Offset = BCh) [Reset = 00000000h]

RTICOMP3CLR is shown in Table 11-1579.

Return to the Summary Table.

Compare 3 Clear compare value to be compared with the counter to clear the compare3 interrupt line

Table 11-1579. RTICOMP3CLR Register Field Descriptions

Bit	Field	Type	Reset	Description
31-0	COMP3CLR	R/W	0h	COMP3CLR: Compare 3 Clear. This registers holds a compare value, which is compared with the counter selected in the compare control logic. If the Free Running Counter matches the compare value, the Compare 3 interrupt or DMA request line is cleared. User and privilege mode (read): current compare value Privilege mode (write): update of the compare register with a new compare value Note: Reset behavior A reset does not generate a compare match, since the compare logic will only be active, when the associated counter block is enabled.

11.8 Internal Diagnostics Modules

11.8.1 Data Modification Module (DMM)

A Data Modification Module (DMM) gives the ability to write external data into the device memory.

This chapter describes the functionality of the Data Modification Module (DMM), which provides the capability to modify data in the entire 4 GB address space of the device from an external peripheral, with minimal interruption of the application. A DMM gives the ability to write external data into the device memory. For HIL (playback), DMM can be used in I/O Mode and CSI mode (trace only mode).

11.8.1.1 Overview....4025
11.8.1.2 Module Operation....4026
11.8.1.3 MSS_DMM Registers....4031

Copyright © 2025 Texas Instruments Incorporated

11.8.1.1 Overview

11.8.1.1.1 Features

The DMM module has the following features:

- Acts as a bus master, thus enabling direct writes to the 4GB address space without CPU intervention
- Writes to memory locations specified in the received packet (leverages packets defined by trace mode of the RAM trace port (RTP) module
- Writes received data to consecutive addresses, which are specified by the DMM module (leverages packets defined by direct data mode of RTP module)
- Configurable port width (1, 2, 4, 8, 16 pins)
- Up to 65 Mbit/s pin data rate
- Unused pins configurable as GIO pins

11.8.1.1.2 Block Diagram

Figure 11-411 shows the block diagram for the DMM.

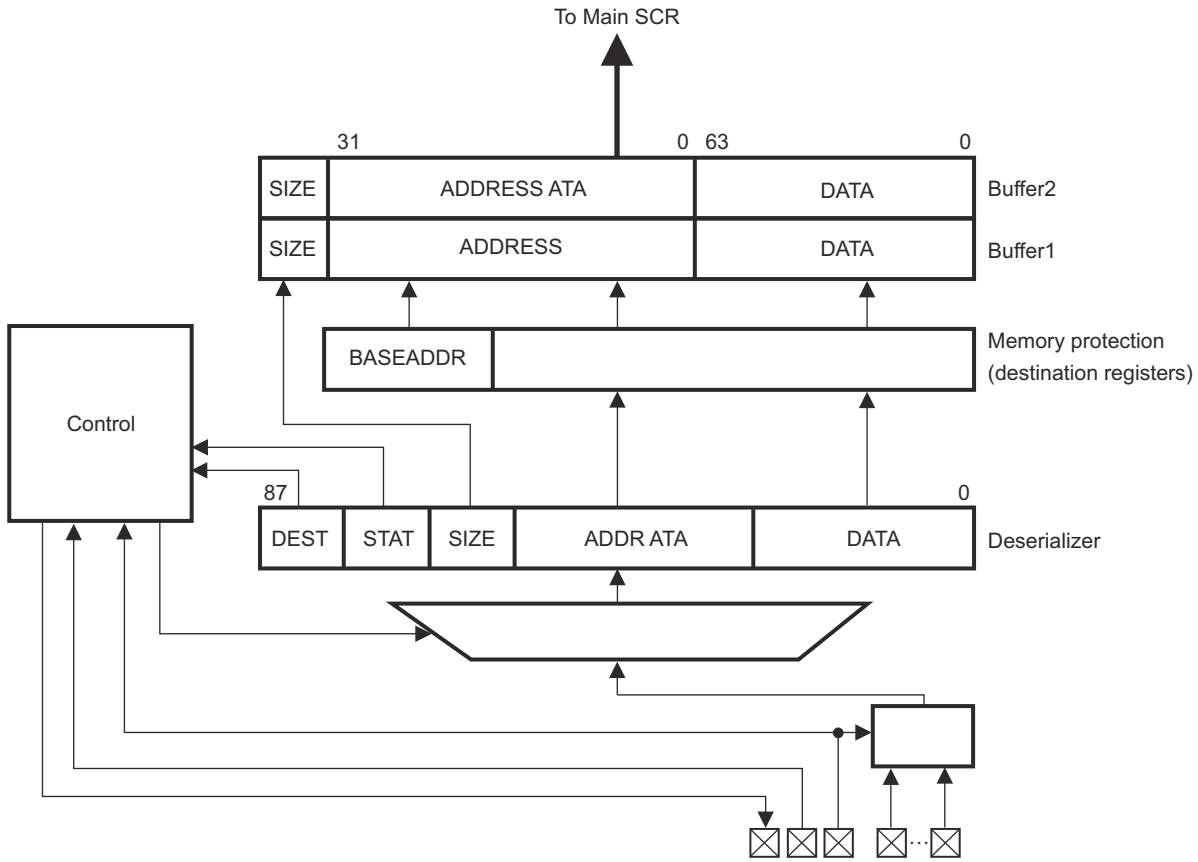

Figure 11-411. DMM Block Diagram

Copyright © 2025 Texas Instruments Incorporated

11.8.1.2 Module Operation

The DMM receives data over the DMM pins from external systems and writes the received data directly to the base address programmed in the module plus offset address given in the packet or into a buffer specified by start address and length. It leverages the protocol defined by the RAM Trace Port (RTP) module to have a common interface definition for external systems. It can also be used to connect an RTP and DMM module together for fast processor intercommunication.

The DMM module provides two modes of operation:

- **Trace Mode:** In this mode, the DMM writes the received data directly to an address that is calculated from the base address programmed into the destination register (DEST0REG1 Register (Offset = 2Ch) [Reset = 00000000h] ; DEST0REG2 Register (Offset = 34h) [Reset = 00000000h]) plus the offset address contained in the received packet. An interrupt can be generated when data is written the lowest address of a programmed region. This capability enables the sender to raise an interrupt at the receiver while sending specific information.
- **Direct Data Mode:** In this mode, the DMM writes the received data into an address range of the 4GB address space. The buffer start address (DDMDEST Register (Offset = 1Ch) [Reset = 00000000h]) and blocksize (DDMBL Register (Offset = 20h) [Reset = 00000000h]) is programmable in the DMM module. When the buffer reaches its end address, the buffer pointer wraps around and points to the beginning of the buffer again. The EO_BUFF flag (INTFLAG Register (Offset = 10h) [Reset = 00000000h]) will be set and if enabled, an interrupt will be generated to indicate a buffer-full condition. Another interrupt, can be configured to indicate different buffer fill levels. This can be accomplished by programming a certain fill level into the DMMINTPT register (INTPT Register (Offset = 28h) [Reset = 00000000h]). The PROG_BUFF flag (INTFLAG Register (Offset = 10h) [Reset = 00000000h]) indicates that this level has been reached.

Data will be captured by the input buffer and moved to the appropriate bit field in the deseralizer. When the deseralizer is completely full, the data will be moved to the output buffer register. A two-level buffer is implemented to avoid overflow conditions if the internal bus is occupied by other transactions. In addition the $\overline{\text{DMMENA}}$ signal can be used to signal the external hardware that an overflow might occur if more data is sent. The automatic generation of the $\overline{\text{DMMENA}}$ signal can be configured by setting the ENAFUNC bit (DMMPC0 Register (Offset = 6Ch) [Reset = 00000000h]). While the $\overline{\text{DMMENA}}$ signal is active, the DMM module will not receive any new data.

The DMM is a bus master and forwards the received data to the bus system. The write operation will be minimally intrusive to the program flow, because the CPU/DMA access will only be blocked if the CPU/DMA accesses the same resource as the DMM.

To prevent an external system from overwriting critical data in the memory while configured in Trace Mode, a memory protection mechanism is implemented via a programmable start address and block size of a region. A maximum of four destinations with two regions each are supported.

For proper operation, at least DMMCLK, DMMSYNC and DMMDATA[0] need to be programmed in functional mode (DMMPC0 Register (Offset = 6Ch) [Reset = 00000000h]). If a large amount of data should be transmitted in a short time, more data pins should be used in functional mode. The module supports 1, 2, 4, 8, or 16-pin configurations.

The module can be configured to handle a free running clock provided on DMMCLK (GLBCTRL Register (Offset = 0h) [Reset = 00000005h]). Clock pulses between two DMMSYNC pulses that exceed the number of valid clock pulses for a packet will be ignored.

11.8.1.2.1 Data Format

Below is a description of the packet and frame format.

11.8.1.2.1.1 Clocking Scheme

The DMM supports both continuous and noncontinuous clocking. The clock received on DMMCLK in the continuous clocking scheme is a free-running clock. In noncontinuous clocking scheme, the clock will stop after each packet and will start with the reception of a DMMSYNC signal.

Copyright © 2025 Texas Instruments Incorporated

11.8.1.2.1.2 Trace Mode Packet

Figure 11-412 illustrates the trace mode packet format. One packet consists of 2 bits (DEST) denoting the destination in which the data is stored, 2 status bits (STAT), the 2-bit SIZE of the data, the 18-bit address of where the data should be written to, and a variable data field.

The DEST bits (Table 11-1580) will be used to determine which destination register applies to the transmitted data and the received address determines if the packet falls into a valid region of the destination area. If the address is valid, the base address, programmed in one of the destination registers (DEST1REG1 Register (Offset = 3Ch) [Reset = 00000000h] ; DEST1REG2 Register (Offset = 44h) [Reset = 00000000h]) of this particular region will be applied to create the complete 32-bit address for the destination. The DMM module only takes action on a "11" setting of the STAT bits (Table 11-1581). This signals that an overflow in the transmitting hardware module has occurred. If this is the case the SRC_OVF flag (INTFLAG Register (Offset = 10h) [Reset = 00000000h]) will be set and the received data will be written to the address specified in the packet. The size information of the data transmitted in the packet is denoted in the SIZE bits (Table 11-1582) of the packet. Depending on the SIZE information, the module expects to receive only this amount of data.

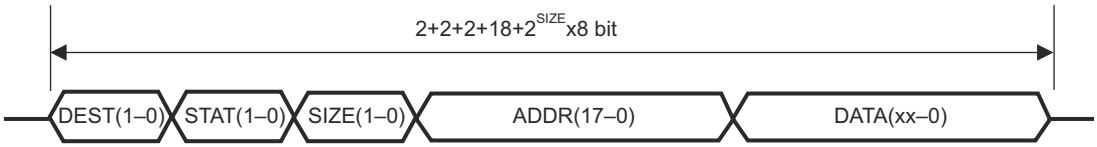

Figure 11-412. Trace Mode Packet Format

Table 11-1580 through Table 11-1582 illustrate the encoding of packet format in trace mode.

Table 11-1580. Encoding of Destination Bits in Trace Mode Packet Format

DEST[1:0]	Destination
00	Dest 0
01	Dest 1
10	Dest 2
11	Dest 3

Table 11-1581. Encoding of Status Bits in Trace Mode Packet Format

STAT[1:0]	Status
00	don't care
01	don't care
10	don't care
11	overflow

Table 11-1582. Encoding of Write Size in Packet Format

SIZE[1:0]	Write Size
00	8 bit
01	16 bit
10	32 bit
11	64 bit

11.8.1.2.1.3 Direct Data Mode Packet

Figure 11-413 illustrates the direct data mode packet format.

Copyright © 2025 Texas Instruments Incorporated

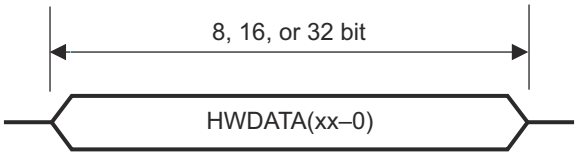

Figure 11-413. Direct Data Mode Packet Format

The packet consists only of data bits and no header information. It can be 8-, 16- or 32-bit wide. A variable packet width is not supported because the DMM module will check the number of incoming bits (DMMCLK cycles) for error detection. The DMM will write the received data to the destination once the programmed number of bits has been received.

If the programmed word width does not correspond to the received data, the following actions will be taken:

- If the received data is greater than the programmed width, only the configured number of bits are transferred into the RAM buffer, the additional bits are discarded.
- If the received number of bits is smaller than the programmed width, no data will be written to the buffer, because a new DMMSYNC signal has been received before the expected number of bits.

11.8.1.2.2 Data Port

The packet will be received in several subpackets, depending on the width of the external data bus (DMMDATA[y:0]) and the amount of data to be transmitted. Table 11-1583 illustrates the number of clock cycles required for a complete packet.

Table 11-1583. Number of Clock Cycles per Packet

Port Width/ Pins	Write Size in Bits			
	8	16	32	64
1	32	40	56	88
2	16	20	28	44
4	8	10	14	22
8	4	5	7	11
16	2	3	4	6

The user can program the port width in the DMMPC0 register (DMMPC0 Register (Offset = 6Ch) [Reset = 00000000h]). This feature allows pins that are not used for DMM functionality to be used as GIO pins. Only the pins shown in Table 11-1584 can be used for a desired port width.

Table 11-1584. Pins Used for Data Communication

Port Width	Pins Used
1	DMMDATA[0]
2	DMMDATA[1:0]
4	DMMDATA[3:0]
8	DMMDATA[7:0]
16	DMMDATA[15:0]

Note

If pins other than the ones specified in Table 11-1584 are programmed as functional pins for a desired port width, the received data will be corrupted and will not be transferred to the deserializer.

Note

If DMMCLK or DMMSYNC are programmed as nonfunctional pins, functional operation will not occur.

Copyright © 2025 Texas Instruments Incorporated

11.8.1.2.2.1 Signal Description

DMMSYNC	This signal has to be provided by external hardware. It signals the start of a new packet. It has to be active (high) for one full DMMCLK cycle, starting with the rising edge of DMMCLK. If the DMMSYNC pulse is longer than a single DMMCLK cycle and two falling edges of DMMCLK see a high pulse on DMMSYNC, the module will treat the second DMMSYNC pulse as the start of a packet and will flag a PACKET_ERR_INT (INTFLAG Register (Offset = 10h) [Reset = 00000000h]).
DMMCLK	The clock is externally generated and can be suspended between two packets. For this feature, CONTCLK must be set to 0 (GLBCTRL Register (Offset = 0h) [Reset = 00000005h]). If the clock is not stopped between two packets, CONTCLK must be set to 1. Data will be latched on the falling edge of the DMMCLK signal.
$\overline{\text{DMMENA}}$	This signal is pulled high if no new data should be received via the data pins, because of a potential overflow situation.
DMMDATA[15:0]	These pins receive the packet information transmitted by the external hardware. Data is latched on the falling edge of DMMCLK.

Figure 11-414 shows an example of multiple packets received during trace mode, in noncontinuous clock configuration.

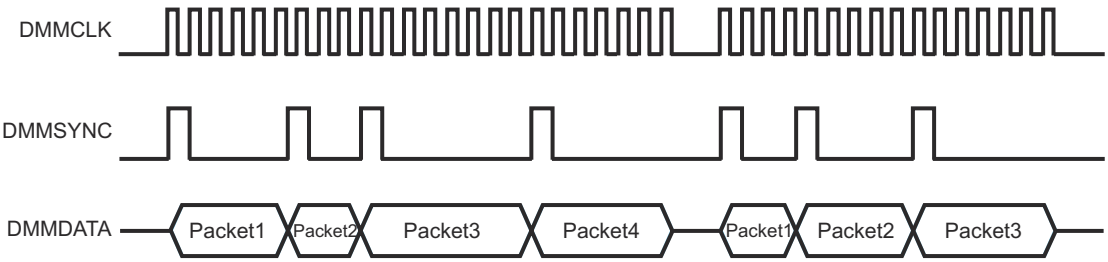

Figure 11-414. Packet Sync Signal Example

Figure 11-415 shows an example of a 4-bit data port with 8-bit receive data (A5h) to be written into DEST1 (address 0001 2345h) on a trace mode packet.

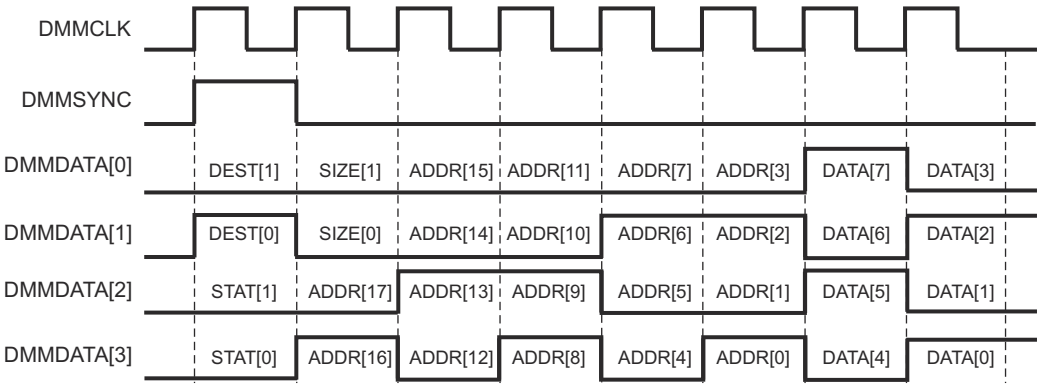

Figure 11-415. Example Single Packet Transmission

11.8.1.2.3 Error Handling

The module will generate two different kind of errors. Once an error condition is recognized, an interrupt will be generated if enabled.

11.8.1.2.3.1 Overflow Error

This error is signaled when the module has received new data before the previous data was written to the destination address. If the internal buffers are full, the $\overline{\text{DMMENA}}$ signal will go high. If the sending module does not evaluate the $\overline{\text{DMMENA}}$ signal and keeps on sending new frames, the data that was previously received

Copyright © 2025 Texas Instruments Incorporated

might be overwritten, thus resulting in setting the BUFF_OVF flag (INTFLAG Register (Offset = 10h) [Reset = 00000000h]).

11.8.1.2.3.2 Packet Error

Noncontinuous Clock Mode

The size of the incoming packet is defined by the SIZE information of a trace mode packet or the programmed size of a direct data mode packet. If too many or less than the number of bits are received before the next sync signal, the PACKET_ERR_INT flag will be set (INTFLAG Register (Offset = 10h) [Reset = 00000000h]). In case of receiving a DMMCLK signal without a corresponding DMMSYNC signal, a packet error will also be generated.

Continuous Clock Mode

If less than the expected number of bits are received, the PACKET_ERR_INT flag will be set (INTFLAG Register (Offset = 10h) [Reset = 00000000h]) when the next DMMSYNC signal is received. Packets with more than the expected number of bits cannot be detected.

The check for packet error is done only after the detection of the first DMMSYNC signal after the DMM is turned on or comes out of suspend mode (with COS = 0; GLBCTRL Register Field Descriptions), that is, before the reception of first DMMSYNC, the toggling of DMMCLK would be ignored.

11.8.1.2.3.3 Bus Error

If an error occurs on the microcontroller internal bus system while transferring the data from the DMM to the destination, the BUSERROR flag will be set.

11.8.1.2.4 Interrupts

The module provides different interrupts. These can be programmed to different interrupt levels independently using DMMINTLVL (INTLVL Register (Offset = Ch) [Reset = 00000000h]).

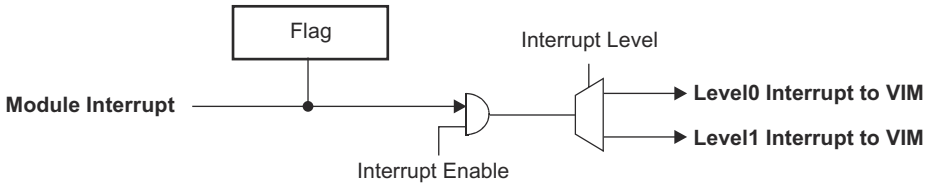

Figure 11-416. Interrupt Structure

Interrupts can be divided into error interrupts and functional interrupts. The error handling is described in Section 11.8.1.2.3. Functional interrupts depend on the mode (Trace Mode, Direct Data Mode) the DMM module is used in.

Trace Mode: An interrupt can be enabled whenever an access to the lowest address of a defined region is performed. This address is the starting address programmed in the DMMDESTxREGy register. An interrupt for each of the region can be generated by setting the individual interrupt enable bits.

Direct Data Mode: There are two interrupts that can be individually controlled. One is generated when the buffer pointer reaches the end of the defined buffer and wraps around (EO_BUFF; INTSET Register (Offset = 4h) [Reset = 00000000h]). The other one is generated when the buffer pointer matches the programmed interrupt threshold (PROG_BUFF; INTSET Register (Offset = 4h) [Reset = 00000000h]). The buffer pointer points to the next address to be written, therefor there are (interrupt threshold - 1) values stored in the buffer. The interrupt threshold can be programmed in the DMMINTPT register (INTPT Register (Offset = 28h) [Reset = 00000000h]).

Copyright © 2025 Texas Instruments Incorporated

11.8.1.3 MSS_DMM Registers

Table 11-1585 lists the memory-mapped registers for the MSS_DMM registers. All register offset addresses not listed in Table 11-1585 should be considered as reserved locations and the register contents should not be modified.

Table 11-1585. MSS_DMM Registers

Offset	Acronym	Register Name	Section
0h	GLBCTRL	DMM Global Control Register	Go
4h	INTSET	DMM Interrupt Set Register	Go
8h	INTCLR	DMM Interrupt Clear Register	Go
Ch	INTLVL	DMM Interrupt Level Register	Go
10h	INTFLAG	DMM Interrupt Flag Register	Go
14h	OFF1	DMM Interrupt Offset 1 Register	Go
18h	OFF2	DMM Interrupt Offset 2 Register	Go
1Ch	DDMDEST	DMM DDM Destination Register	Go
20h	DDMBL	DMM DDM Blocksize Register	Go
24h	DDMPT	DMM DDM Pointer Register	Go
28h	INTPT	DMM DDM Interrupt Pointer Register	Go
2Ch	DEST0REG1	DMM DEST0 Region1	Go
30h	DEST0BL1	DMM DEST0 Region1 Blocksize Register	Go
34h	DEST0REG2	DMM DEST0 Region2	Go
38h	DEST0BL2	DMM DEST0 Region2 Blocksize Register	Go
3Ch	DEST1REG1	DMM DEST1 Region1	Go
40h	DEST1BL1	DMM DEST1 Region1 Blocksize Register	Go
44h	DEST1REG2	DMM DEST1 Region2	Go
48h	DEST1BL2	DMM DEST1 Region2 Blocksize Register	Go
4Ch	DEST2REG1	DMM DEST2 Region1	Go
50h	DEST2BL1	DMM DEST2 Region1 Blocksize Register	Go
54h	DEST2REG2	DMM DEST2 Region2	Go
58h	DEST2BL2	DMM DEST2 Region2 Blocksize Register	Go
5Ch	DEST3REG1	DMM DEST3 Region1	Go
60h	DEST3BL1	DMM DEST3 Region1 Blocksize Register	Go
64h	DEST3REG2	DMM DEST3 Region2	Go
68h	DEST3BL2	DMM DEST3 Region2 Blocksize Register	Go
6Ch	DMMPC0	DMM Pin Control 0	Go
70h	DMMPC1	DMM Pin Control 1	Go
74h	DMMPC2	DMM Pin Control 2	Go
78h	DMMPC3	DMM Pin Control 3	Go
7Ch	DMMPC4	DMM Pin Control 4	Go
80h	DMMPC5	DMM Pin Control 5	Go
84h	DMMPC6	DMM Pin Control 6	Go
88h	DMMPC7	DMM Pin Control 7	Go
8Ch	DMMPC8	DMM Pin Control 8	Go

Complex bit access types are encoded to fit into small table cells. Table 11-1586 shows the codes that are used for access types in this section.

Copyright © 2025 Texas Instruments Incorporated

Table 11-1586. MSS_DMM Access Type Codes

Access Type	Code	Description
Read Type		
R	R	Read
Write Type		
W	W	Write
Reset or Default Value		
-n		Value after reset or the default value

Copyright © 2025 Texas Instruments Incorporated

11.8.1.3.1 GLBCTRL Register (Offset = 0h) [Reset = 00000005h]

GLBCTRL is shown in Table 11-1587.

Return to the Summary Table.

Sets the global configuration of the module

Table 11-1587. GLBCTRL Register Field Descriptions

Bit	Field	Type	Reset	Description
31-25	RESERVED	R	0h	Reserved
24	BUSY	R/W	0h	BUSY User and privilege mode (read): 0 = the DMM does not currently receive data and has no data in its internal buffers, which need to be transfered. 1 = the module is currently receiving data, or has data in its internal buffers Privilege mode (write): Writes have no effect
23-19	RESERVED	R	0h	Reserved
18	CONTCLK	R/W	0h	CONTCLK. Continous RTPCLK output User and privilege mode (read): 0 = RTPCLK will be suspended between two packets 1 = free running RTPCLK Privilege mode (write): 0 = suspend RTPCLK between packets 1 = enable free running clock between packets
17	COS	R/W	0h	COS. Continue On Suspend Influences behaviour of module while in suspend mode. In all cases the corresponding interrupt will be set. User and privilege mode (read): 0 = before entering suspend mode, the ongoing reception (if started 1 HCLK cycle before SUSPEND goes high) of a packet will be finished and the value will be written to the destination. 2 HCLK cycles after SUSPEND goes low, the reception of packets is enabled again. 1 = continue receiving packets and update destination, while in suspend mode Privilege mode (write): 0 = disable data reception while in suspend mode 1 = enable data reception while in suspend mode
16	RESET	R/W	0h	RESET This bit resets the statemachine and the registers to its reset value, except the RESET bit itself. It has to be cleared by writing to it. User and privilege mode (read): 0 = no reset of DMM module 1 = reset of DMM module Privilege mode (write): 0 = no reset of DMM module 1 = reset DMM module to its reset state
15-11	RESERVED	R	0h	Reserved
10-9	DDM_WIDTH	R/W	0h	DDM_WIDTH: Packet Width in Direct Data Mode User and privilege mode read and write operation: Bit Encoding Transfer Size 00 8 bit 01 16 bit 10 32 bit 11 Reserved
8	TM_DMM	R/W	0h	TM_DMM: Packet Format If this bit is set, the DMM module assumes to receive packets by the Direct Data Mode. User and privilege mode (read): 0 = the DMM module assumes packets in Trace Mode definition 1 = the DMM module assumes packets in Direct Data Mode definition Privilege mode (write): 0 = enable Trace Mode 1 = enable Direct Data Mode
7-4	RESERVED	R	0h	Reserved

Copyright © 2025 Texas Instruments Incorporated

Table 11-1587. GLBCTRL Register Field Descriptions (continued)

Bit	Field	Type	Reset	Description
3-0	ONOFF	R/W	5h	ON/OFF User and privilege mode (read): 1010 = the DMM module receives data and writes it to the buffer all other = the DMM module does not receive data Privilege mode (write): 1010 = enable receive/write operations. Packets will be received 1 HCLK cycle after enabling the module all other = disable receive/write operations. Packets in reception will be finished. NOTE: It is recommended to write 0101 to avoid having a soft error inadvertently enabling the module. NOTE: Registers which affect the operation of the module, should be only programmed when the BUSY bit is 0 and the ON/OFF bits are not 1010. NOTE: If the module was turned off (ON/OFF != 1010) and then turned on (ON/OFF = 1010) again, it is recommended to perform a reset (RESET = 1) of the module before switching it on. This avoids that the state machine is held in an unrecoverable state.

Copyright © 2025 Texas Instruments Incorporated

11.8.1.3.2 INTSET Register (Offset = 4h) [Reset = 00000000h]

INTSET is shown in Table 11-1588.

Return to the Summary Table.

Enables interrupts

Table 11-1588. INTSET Register Field Descriptions

Bit	Field	Type	Reset	Description
31-18	RESERVED	R/W	0h	Reserved
17	PROG_BUFF	R/W	0h	PROG_BUFF: Programmable Buffer Interrupt Set This enables the interrupt generation in case the buffer pointer equals the programmed value in the DMMINTPT register. User and privilege mode (read): 0 = no interrupt will be generated 1 = an interrupt will be generated Privilege mode (write): 0 = no influence on bit 1 = enable interrupt (sets corresponding bit in DMMINTCLR)
16	EO_BUFF	R/W	0h	EO_BUFF: End of Buffer Interrupt Set This enables the interrupt generation in case data was written to the last entry in the buffer and the pointer wrapped around. User and privilege mode (read): 0 = no interrupt will be generated 1 = an interrupt will be generated Privilege mode (write): 0 = no influence on bit 1 = enable interrupt (sets corresponding bit in DMMINTCLR)
15	DEST3REG2	R/W	0h	DEST3REG 2: Destination 3 Region 2 Interrupt Set This enables the interrupt generation in case data was accessed at the startaddress of Destination 3 Region 2. User and privilege mode (read): 0 = no interrupt will be generated 1 = an interrupt will be generated Privilege mode (write): 0 = no influence on bit 1 = enable interrupt (sets corresponding bit in DMMINTCLR)
14	DEST3REG1	R/W	0h	DEST3REG 1: Destination 3 Region 1 Interrupt Set This enables the interrupt generation in case data was accessed at the startaddress of Destination 3 Region 1. User and privilege mode (read): 0 = no interrupt will be generated 1 = an interrupt will be generated Privilege mode (write): 0 = no influence on bit 1 = enable interrupt (sets corresponding bit in DMMINTCLR)
13	DEST2REG2	R/W	0h	DEST2REG 2: Destination 2 Region 2 Interrupt Set This enables the interrupt generation in case data was accessed at the startaddress of Destination 2 Region 2. User and privilege mode (read): 0 = no interrupt will be generated 1 = an interrupt will be generated Privilege mode (write): 0 = no influence on bit 1 = enable interrupt (sets corresponding bit in DMMINTCLR)
12	DEST2REG1	R/W	0h	DEST2REG 1: Destination 2 Region 1 Interrupt Set This enables the interrupt generation in case data was accessed at the startaddress of Destination 2 Region 1. User and privilege mode (read): 0 = no interrupt will be generated 1 = an interrupt will be generated Privilege mode (write): 0 = no influence on bit 1 = enable interrupt (sets corresponding bit in DMMINTCLR)

Copyright © 2025 Texas Instruments Incorporated

Table 11-1588. INTSET Register Field Descriptions (continued)

Bit	Field	Type	Reset	Description
11	DEST1REG2	R/W	0h	DEST1REG 2: Destination 1 Region 2 Interrupt Set This enables the interrupt generation in case data was accessed at the startaddress of Destination 1 Region 2. User and privilege mode (read): 0 = no interrupt will be generated 1 = an interrupt will be generated Privilege mode (write): 0 = no influence on bit 1 = enable interrupt (sets corresponding bit in DMMINTCLR)
10	DEST1REG1	R/W	0h	DEST1REG 1: Destination 1 Region 1 Interrupt Set This enables the interrupt generation in case data was accessed at the startaddress of Destination 1 Region 1. User and privilege mode (read): 0 = no interrupt will be generated 1 = an interrupt will be generated Privilege mode (write): 0 = no influence on bit 1 = enable interrupt (sets corresponding bit in DMMINTCLR)
9	DEST0REG2	R/W	0h	DEST0REG 2: Destination 0 Region 2 Interrupt Set This enables the interrupt generation in case data was accessed at the startaddress of Destination 0 Region 2. User and privilege mode (read): 0 = no interrupt will be generated 1 = an interrupt will be generated Privilege mode (write): 0 = no influence on bit 1 = enable interrupt (sets corresponding bit in DMMINTCLR)
8	DEST0REG1	R/W	0h	DEST0REG 1: Destination 0 Region 1 Interrupt Set This enables the interrupt generation in case data was accessed at the startaddress of Destination 0 Region 1. User and privilege mode (read): 0 = no interrupt will be generated 1 = an interrupt will be generated Privilege mode (write): 0 = no influence on bit 1 = enable interrupt (sets corresponding bit in DMMINTCLR)
7	BUSERROR	R/W	0h	BUSERROR: BMM Bus Error Response User and privilege mode (read): 0 = no interrupt will be generated 1 = an interrupt will be generated on BMM HRESP = Error Privilege mode (write): 0 = no influence on bit 1 = enable interrupt when BMM HRESP = Error
6	BUFF_OVF	R/W	0h	BUFF_OVF: Write Buffer Overflow Interrupt Set This enables the interrupt generation in case new data is received, while the previous data is still in the deserializer. User and privilege mode (read): 0 = no interrupt will be generated 1 = an interrupt will be generated Privilege mode (write): 0 = no influence on bit 1 = enable interrupt (sets corresponding bit in DMMINTCLR)
5	SRC_OVF	R/W	0h	SRC_OVF: Source Overflow Interrupt Set This enables the interrupt generation in case a overflow was denoted in the STAT bits of the received packet. User and privilege mode (read): 0 = no interrupt will be generated 1 = an interrupt will be generated Privilege mode (write): 0 = no influence on bit 1 = enable interrupt (sets corresponding bit in DMMINTCLR)

Copyright © 2025 Texas Instruments Incorporated

Table 11-1588. INTSET Register Field Descriptions (continued)

Bit	Field	Type	Reset	Description
4	DEST3_ERRENA	R/W	0h	DEST3_ERRENA: Destination 3 Error Interrupt Set This enables the interrupt generation in case data should be written into a address not specified by DMMDEST3REG1/DMMDEST3BL1 or DMMDEST3REG2/DMMDEST3BL2. If both blocksizes are programmed to 0 or a reserved value, the interrupt will also be generated. The write in this case will not take place. User and privilege mode (read): 0 = no interrupt will be generated 1 = an interrupt will be generated Privilege mode (write): 0 = no influence on bit 1 = enable interrupt
3	DEST2_ERRENA	R/W	0h	DEST2_ERRENA: Destination 2 Error Interrupt Set This enables the interrupt generation in case data should be written into a address not specified by DMMDEST2REG1/DMMDEST2BL1 or DMMDEST2REG2/DMMDEST2BL2. If both blocksizes are programmed to 0 or a reserved value, the interrupt will also be generated. The write in this case will not take place. User and privilege mode (read): 0 = no interrupt will be generated 1 = an interrupt will be generated Privilege mode (write): 0 = no influence on bit 1 = enable interrupt (sets corresponding bit in DMMINTCLR)
2	DEST1_ERRENA	R/W	0h	DEST1_ERRENA: Destination 1 Error Interrupt Set This enables the interrupt generation in case data should be written into a address not specified by DMMDEST1REG1/DMMDEST1BL1 or DMMDEST1REG2/DMMDEST1BL2. If both blocksizes are programmed to 0 or a reserved value, the interrupt will also be generated. The write in this case will not take place. User and privilege mode (read): 0 = no interrupt will be generated 1 = an interrupt will be generated Privilege mode (write): 0 = no influence on bit 1 = enable interrupt (sets corresponding bit in DMMINTCLR)
1	DEST0_ERRENA	R/W	0h	DEST0_ERRENA: Destination 0 Error Interrupt Set This enables the interrupt generation in case data should be written into a address not specified by DMMDEST0REG1/DMMDEST0BL1 or DMMDEST0REG2/DMMDEST0BL2. If both blocksizes are programmed to 0 or a reserved value, the interrupt will also be generated. The write in this case will not take place. User and privilege mode (read): 0 = no interrupt will be generated 1 = an interrupt will be generated Privilege mode (write): 0 = no influence on bit 1 = enable interrupt (sets corresponding bit in DMMINTCLR)
0	PACKET_ERR_INT	R/W	0h	PACKET_ERR_INT: Packet Error Interrupt Set This enables the interrupt generation in case of an error condition. Either the number of bits received on a Trace Mode packet doesn't correspond to the size specified in the SIZE field or the number of bits received on a Direct Data Mode packet doesn't equal the number of programmed bits in DMMGLBCTRL [10:9]. User and privilege mode (read): 0 = no interrupt will be generated 1 = an interrupt will be generated in case of an overflow or packet error. Privilege mode (write): 0 = no influence on bit 1 = enable interrupt (sets corresponding bit in DMMINTCLR)

Copyright © 2025 Texas Instruments Incorporated

11.8.1.3.3 INTCLR Register (Offset = 8h) [Reset = 00000000h]

INTCLR is shown in Table 11-1589.

Return to the Summary Table.

Disables interrupts

Table 11-1589. INTCLR Register Field Descriptions

Bit	Field	Type	Reset	Description
31-18	RESERVED	R	0h	Reserved
17	PROG_BUFF	R/W	0h	PROG_BUFF: Programmable Buffer Interrupt Clear This disables the interrupt generation in case the buffer pointer equals the programmed value in the DMMINTPT register. User and privilege mode (read): 0 = no interrupt will be generated 1 = an interrupt will be generated Privilege mode (write): 0 = no influence on bit 1 = disable interrupt (clears corresponding bit in DMMINTSET)
16	EO_BUFF	R/W	0h	EO_BUFF: End of Buffer Interrupt Clear This disables the interrupt generation in case data was written to the last entry in the buffer and the pointer wrapped around. User and privilege mode (read): 0 = no interrupt will be generated 1 = an interrupt will be generated Privilege mode (write): 0 = no influence on bit 1 = disable interrupt (clears corresponding bit in DMMINTSET)
15	DEST3REG2	R/W	0h	DEST3REG 2: Destination 3 Region 2 Interrupt Clear This disables the interrupt generation in case data was accessed at the startaddress of Destination 3 Region 2. User and privilege mode (read): 0 = no interrupt will be generated 1 = an interrupt will be generated Privilege mode (write): 0 = no influence on bit 1 = disable interrupt (clears corresponding bit in DMMINTSET)
14	DEST3REG1	R/W	0h	DEST3REG 1: Destination 3 Region 1 Interrupt Clear This disables the interrupt generation in case data was accessed at the startaddress of Destination 3 Region 1. User and privilege mode (read): 0 = no interrupt will be generated 1 = an interrupt will be generated Privilege mode (write): 0 = no influence on bit 1 = disable interrupt (clears corresponding bit in DMMINTSET)
13	DEST2REG2	R/W	0h	DEST2REG 2: Destination 2 Region 2 Interrupt Clear This disables the interrupt generation in case data was accessed at the startaddress of Destination 2 Region 2. User and privilege mode (read): 0 = no interrupt will be generated 1 = an interrupt will be generated Privilege mode (write): 0 = no influence on bit 1 = disable interrupt (clears corresponding bit in DMMINTSET)
12	DEST2REG1	R/W	0h	DEST2REG 1: Destination 2 Region 1 Interrupt Clear This disables the interrupt generation in case data was accessed at the startaddress of Destination 2 Region 1. User and privilege mode (read): 0 = no interrupt will be generated 1 = an interrupt will be generated Privilege mode (write): 0 = no influence on bit 1 = disable interrupt (clears corresponding bit in DMMINTSET)

Copyright © 2025 Texas Instruments Incorporated

Table 11-1589. INTCLR Register Field Descriptions (continued)

Bit	Field	Type	Reset	Description
11	DEST1REG2	R/W	0h	DEST1REG 2: Destination 1 Region 2 Interrupt Clear This disables the interrupt generation in case data was accessed at the startaddress of Destination 1 Region 2. User and privilege mode (read): 0 = no interrupt will be generated 1 = an interrupt will be generated Privilege mode (write): 0 = no influence on bit 1 = disable interrupt (clears corresponding bit in DMMINTSET)
10	DEST1REG1	R/W	0h	DEST1REG 1: Destination 1 Region 1 Interrupt Clear This disables the interrupt generation in case data was accessed at the startaddress of Destination 1 Region 1. User and privilege mode (read): 0 = no interrupt will be generated 1 = an interrupt will be generated Privilege mode (write): 0 = no influence on bit 1 = disable interrupt (clears corresponding bit in DMMINTSET)
9	DEST0REG2	R/W	0h	DEST0REG 2: Destination 0 Region 2 Interrupt Clear This disables the interrupt generation in case data was accessed at the startaddress of Destination 0 Region 2. User and privilege mode (read): 0 = no interrupt will be generated 1 = an interrupt will be generated Privilege mode (write): 0 = no influence on bit 1 = disable interrupt (clears corresponding bit in DMMINTSET)
8	DEST0REG1	R/W	0h	DEST0REG 1: Destination 0 Region 1 Interrupt Clear This disables the interrupt generation in case data was accessed at the startaddress of Destination 0 Region 1. User and privilege mode (read): 0 = no interrupt will be generated 1 = an interrupt will be generated Privilege mode (write): 0 = no influence on bit 1 = disable interrupt (clears corresponding bit in DMMINTSET)
7	BUSERROR	R/W	0h	BUSERROR: BMM Bus Error Response User and privilege mode (read): 0 = no interrupt will be generated 1 = an interrupt will be generated on BMM HRESP = Error Privilege mode (write): 0 = no influence on bit 1 = disable interrupt on BMM HRESP = Error
6	BUFF_OVF	R/W	0h	BUFF_OVF: Write Buffer Overflow Interrupt Clear This disables the interrupt generation in case new data is received, while the previous data is still in the deserializer.. User and privilege mode (read): 0 = no interrupt will be generated 1 = an interrupt will be generated Privilege mode (write): 0 = no influence on bit 1 = disable interrupt (clears corresponding bit in DMMINTSET)
5	SRC_OVF	R/W	0h	SRC_OVF: Source Overflow Interrupt Clear This disables the interrupt generation in case a overflow was denoted in the STAT bits of the received packet. User and privilege mode (read): 0 = no interrupt will be generated 1 = an interrupt will be generated Privilege mode (write): 0 = no influence on bit 1 = disable interrupt (clears corresponding bit in DMMINTSET)

Copyright © 2025 Texas Instruments Incorporated

Table 11-1589. INTCLR Register Field Descriptions (continued)

Bit	Field	Type	Reset	Description
4	DEST3_ERRENA	R/W	0h	DEST3_ERRENA: Destination 3 Error Interrupt Clear This disables the interrupt generation in case data should be written into a address not specified by DMMDEST3REG1/DMMDEST3BL1 or DMMDEST3REG2/DMMDEST3BL2. If both blocksizes are programmed to 0 or a reserved value, the interrupt will also be generated. The write in this case will not take place. User and privilege mode (read): 0 = no interrupt will be generated 1 = an interrupt will be generated Privilege mode (write): 0 = no influence on bit 1 = disable interrupt (clears corresponding bit in DMMINTSET)
3	DEST2_ERRENA	R/W	0h	DEST2_ERRENA: Destination 2 Error Interrupt Clear This disables the interrupt generation in case data should be written into a address not specified by DMMDEST2REG1/DMMDEST2BL1 or DMMDEST2REG2/DMMDEST2BL2. If both blocksizes are programmed to 0 or a reserved value, the interrupt will also be generated. The write in this case will not take place. User and privilege mode (read): 0 = no interrupt will be generated 1 = an interrupt will be generated Privilege mode (write): 0 = no influence on bit 1 = disable interrupt (clears corresponding bit in DMMINTSET)
2	DEST1_ERRENA	R/W	0h	DEST1_ERRENA: Destination 1 Error Interrupt Clear This disables the interrupt generation in case data should be written into a address not specified by DMMDEST1REG1/DMMDEST1BL1 or DMMDEST1REG2/DMMDEST1BL2. If both blocksizes are programmed to 0 or a reserved value, the interrupt will also be generated. The write in this case will not take place. User and privilege mode (read): 0 = no interrupt will be generated 1 = an interrupt will be generated Privilege mode (write): 0 = no influence on bit 1 = disable interrupt (clears corresponding bit in DMMINTSET)
1	DEST0_ERRENA	R/W	0h	DEST0_ERRENA: Destination 0 Error Interrupt Clear This disables the interrupt generation in case data should be written into a address not specified by DMMDEST0REG1/DMMDEST0BL1 or DMMDEST0REG2/DMMDEST0BL2. If both blocksizes are programmed to 0 or a reserved value, the interrupt will also be generated. The write in this case will not take place. User and privilege mode (read): 0 = no interrupt will be generated 1 = an interrupt will be generated Privilege mode (write): 0 = no influence on bit 1 = disable interrupt (clears corresponding bit in DMMINTSET)
0	PACKET_ERR_INT	R/W	0h	PACKET_ERR_INT: Packet Error Interrupt Clear This disables the interrupt generation in case of an error condition. Either the number of bits received on a Trace Mode packet doesn't correspond to the size specified in the SIZE field or the number of bits received on a Direct Data Mode packet doesn't equal the number of programmed bits in DMMGLBCTRL [10:9]. User and privilege mode (read): 0 = no interrupt will be generated 1 = an interrupt will be generated in case of an overflow or packet error. Privilege mode (write): 0 = no influence on bit 1 = disable interrupt (clears corresponding bit in DMMINTSET)

Copyright © 2025 Texas Instruments Incorporated

11.8.1.3.4 INTLVL Register (Offset = Ch) [Reset = 00000000h]

INTLVL is shown in Table 11-1590.

Return to the Summary Table.

Selects high or low priority interrupt level

Table 11-1590. INTLVL Register Field Descriptions

Bit	Field	Type	Reset	Description
31-18	RESERVED	R	0h	Reserved
17	PROG_BUFF	R/W	0h	PROG_BUFF: Programmable Buffer Interrupt Level User and privilege mode (read): 0 = interrupt mapped to level 0 1 = interrupt mapped to level 1 Privilege mode (write): 0 = interrupt will be mapped to level 0 1 = interrupt will be mapped to level 1
16	EO_BUFF	R/W	0h	EO_BUFF: End of Buffer Interrupt Level User and privilege mode (read): 0 = interrupt mapped to level 0 1 = interrupt mapped to level 1 Privilege mode (write): 0 = interrupt will be mapped to level 0 1 = interrupt will be mapped to level 1
15	DEST3REG2	R/W	0h	DEST3REG 2: Destination 3 Region 2 Interrupt Level User and privilege mode (read): 0 = interrupt mapped to level 0 1 = interrupt mapped to level 1 Privilege mode (write): 0 = interrupt will be mapped to level 0 1 = interrupt will be mapped to level 1
14	DEST3REG1	R/W	0h	DEST3REG 1: Destination 3 Region 1 Interrupt Level User and privilege mode (read): 0 = interrupt mapped to level 0 1 = interrupt mapped to level 1 Privilege mode (write): 0 = interrupt will be mapped to level 0 1 = interrupt will be mapped to level 1
13	DEST2REG2	R/W	0h	DEST2REG 2: Destination 2 Region 2 Interrupt Level User and privilege mode (read): 0 = interrupt mapped to level 0 1 = interrupt mapped to level 1 Privilege mode (write): 0 = interrupt will be mapped to level 0 1 = interrupt will be mapped to level 1
12	DEST2REG1	R/W	0h	DEST2REG 1: Destination 2 Region 1 Interrupt Level User and privilege mode (read): 0 = interrupt mapped to level 0 1 = interrupt mapped to level 1 Privilege mode (write): 0 = interrupt will be mapped to level 0 1 = interrupt will be mapped to level 1
11	DEST1REG2	R/W	0h	DEST1REG 2: Destination 1 Region 2 Interrupt Level User and privilege mode (read): 0 = interrupt mapped to level 0 1 = interrupt mapped to level 1 Privilege mode (write): 0 = interrupt will be mapped to level 0 1 = interrupt will be mapped to level 1

Copyright © 2025 Texas Instruments Incorporated

Table 11-1590. INTLVL Register Field Descriptions (continued)

Bit	Field	Type	Reset	Description
10	DEST1REG1	R/W	0h	DEST1REG 1: Destination 1 Region 1 Interrupt Level User and privilege mode (read): 0 = interrupt mapped to level 0 1 = interrupt mapped to level 1 Privilege mode (write): 0 = interrupt will be mapped to level 0 1 = interrupt will be mapped to level 1
9	DEST0REG2	R/W	0h	DEST0REG 2: Destination 0 Region 2 Interrupt Level User and privilege mode (read): 0 = interrupt mapped to level 0 1 = interrupt mapped to level 1 Privilege mode (write): 0 = interrupt will be mapped to level 0 1 = interrupt will be mapped to level 1
8	DEST0REG1	R/W	0h	DEST0REG 1: Destination 0 Region 1 Interrupt Level User and privilege mode (read): 0 = interrupt mapped to level 0 1 = interrupt mapped to level 1 Privilege mode (write): 0 = interrupt will be mapped to level 0 1 = interrupt will be mapped to level 1
7	BUSERROR	R/W	0h	BUSERROR: BMM Bus Error Response User and privilege mode (read): 0 = interrupt mapped to level 0 1 = interrupt mapped to level 1 Privilege mode (write): 0 = interrupt will be mapped to level 0 1 = interrupt will be mapped to level 1
6	BUFF_OVF	R/W	0h	BUFF_OVF: Write Buffer Overflow Interrupt Level User and privilege mode (read): 0 = interrupt mapped to level 0 1 = interrupt mapped to level 1 Privilege mode (write): 0 = interrupt will be mapped to level 0 1 = interrupt will be mapped to level 1
5	SRC_OVF	R/W	0h	SRC_OVF: Source Overflow Interrupt Level User and privilege mode (read): 0 = interrupt mapped to level 0 1 = interrupt mapped to level 1 Privilege mode (write): 0 = interrupt will be mapped to level 0 1 = interrupt will be mapped to level 1
4	DEST3_ERRENA	R/W	0h	DEST3_ERRENA: Destination 3 Error Interrupt Level User and privilege mode (read): 0 = interrupt mapped to level 0 1 = interrupt mapped to level 1 Privilege mode (write): 0 = interrupt will be mapped to level 0 1 = interrupt will be mapped to level 1
3	DEST2_ERRENA	R/W	0h	DEST2_ERRENA: Destination 2 Error Interrupt Level User and privilege mode (read): 0 = interrupt mapped to level 0 1 = interrupt mapped to level 1 Privilege mode (write): 0 = interrupt will be mapped to level 0 1 = interrupt will be mapped to level 1
2	DEST1_ERRENA	R/W	0h	DEST1_ERRENA: Destination 1 Error Interrupt Level User and privilege mode (read): 0 = interrupt mapped to level 0 1 = interrupt mapped to level 1 Privilege mode (write): 0 = interrupt will be mapped to level 0 1 = interrupt will be mapped to level 1

Copyright © 2025 Texas Instruments Incorporated

Table 11-1590. INTLVL Register Field Descriptions (continued)

Bit	Field	Type	Reset	Description
1	DEST0_ERRENA	R/W	0h	DEST0_ERRENA: Destination 0 Error Interrupt Level User and privilege mode (read): 0 = interrupt mapped to level 0 1 = interrupt mapped to level 1 Privilege mode (write): 0 = interrupt will be mapped to level 0 1 = interrupt will be mapped to level 1
0	PACKET_ERR_INT	R/W	0h	PACKET_ERR_INT: Packet Error Interrupt Level User and privilege mode (read): 0 = interrupt mapped to level 0 1 = interrupt mapped to level 1 Privilege mode (write): 0 = interrupt will be mapped to level 0 1 = interrupt will be mapped to level 1

Copyright © 2025 Texas Instruments Incorporated

11.8.1.3.5 INTFLAG Register (Offset = 10h) [Reset = 00000000h]

INTFLAG is shown in Table 11-1591.

Return to the Summary Table.

Interrupt Flags

Table 11-1591. INTFLAG Register Field Descriptions

Bit	Field	Type	Reset	Description
31-18	RESERVED	R	0h	Reserved
17	PROG_BUFF	R/W	0h	PROG_BUFF: Programmable Buffer Interrupt Flag User and privilege mode (read): 0 = no interrupt occured 1 = interrupt occured Privilege mode (write): 0 = no influence on bit 1 = bit will be cleared
16	EO_BUFF	R/W	0h	EO_BUFF: End of Buffer Interrupt Flag User and privilege mode (read): 0 = no interrupt occured 1 = interrupt occured Privilege mode (write): 0 = no influence on bit 1 = bit will be cleared
15	DEST3REG2	R/W	0h	DEST3REG 2: Destination 3 Region 2 Interrupt Flag User and privilege mode (read): 0 = no interrupt occured 1 = interrupt occured Privilege mode (write): 0 = no influence on bit 1 = bit will be cleared
14	DEST3REG1	R/W	0h	DEST3REG 1: Destination 3 Region 1 Interrupt Flag User and privilege mode (read): 0 = no interrupt occured 1 = interrupt occured Privilege mode (write): 0 = no influence on bit 1 = bit will be cleared
13	DEST2REG2	R/W	0h	DEST2REG 2: Destination 2 Region 2 Interrupt Flag User and privilege mode (read): 0 = no interrupt occured 1 = interrupt occured Privilege mode (write): 0 = no influence on bit 1 = bit will be cleared
12	DEST2REG1	R/W	0h	DEST2REG 1: Destination 2 Region 1 Interrupt Flag User and privilege mode (read): 0 = no interrupt occured 1 = interrupt occured Privilege mode (write): 0 = no influence on bit 1 = bit will be cleared
11	DEST1REG2	R/W	0h	DEST1REG 2: Destination 1 Region 2 Interrupt Flag User and privilege mode (read): 0 = no interrupt occured 1 = interrupt occured Privilege mode (write): 0 = no influence on bit 1 = bit will be cleared

Copyright © 2025 Texas Instruments Incorporated

Table 11-1591. INTFLAG Register Field Descriptions (continued)

Bit	Field	Type	Reset	Description
10	DEST1REG1	R/W	0h	DEST1REG 1: Destination 1 Region 1 Interrupt Flag User and privilege mode (read): 0 = no interrupt occured 1 = interrupt occured Privilege mode (write): 0 = no influence on bit 1 = bit will be cleared
9	DEST0REG2	R/W	0h	DEST0REG 2: Destination 0 Region 2 Interrupt Flag User and privilege mode (read): 0 = no interrupt occured 1 = interrupt occured Privilege mode (write): 0 = no influence on bit 1 = bit will be cleared
8	DEST0REG1	R/W	0h	DEST0REG 1: Destination 0 Region 1 Interrupt Flag User and privilege mode (read): 0 = no interrupt occurred 1 = interrupt occured Privilege mode (write): 0 = no influence on bit 1 = bit will be cleared
7	BUSERROR	R/W	0h	BUSERROR: BMM Bus Error Response This bit is set when the BMM HRESP = Error. User and privilege mode (read): 0 = no interrupt occured 1 = interrupt occured Privilege mode (write): 0 = no influence on bit 1 = bit will be cleared
6	BUFF_OVF	R/W	0h	BUFF_OVF: Write Buffer Overflow Interrupt Flag User and privilege mode (read): 0 = no interrupt occured 1 = interrupt occured Privilege mode (write): 0 = no influence on bit 1 = bit will be cleared
5	SRC_OVF	R/W	0h	SRC_OVF: Source Overflow Interrupt Flag User and privilege mode (read): 0 = no interrupt occured 1 = interrupt occured Privilege mode (write): 0 = no influence on bit 1 = bit will be cleared
4	DEST3_ERRENA	R/W	0h	DEST3_ERRENA: Destination 3 Error Interrupt Flag User and privilege mode (read): 0 = no interrupt occured 1 = interrupt occured Privilege mode (write): 0 = no influence on bit 1 = bit will be cleared
3	DEST2_ERRENA	R/W	0h	DEST2_ERRENA: Destination 2 Error Interrupt Flag User and privilege mode (read): 0 = no interrupt occured 1 = interrupt occured Privilege mode (write): 0 = no influence on bit 1 = bit will be cleared
2	DEST1_ERRENA	R/W	0h	DEST1_ERRENA: Destination 1 Error Interrupt Flag User and privilege mode (read): 0 = no interrupt occured 1 = interrupt occured Privilege mode (write): 0 = no influence on bit 1 = bit will be cleared

Copyright © 2025 Texas Instruments Incorporated

Table 11-1591. INTFLAG Register Field Descriptions (continued)

Bit	Field	Type	Reset	Description
1	DEST0_ERRENA	R/W	0h	DEST0_ERRENA: Destination 0 Error Interrupt Flag User and privilege mode (read): 0 = no interrupt occured 1 = interrupt occured Privilege mode (write): 0 = no influence on bit 1 = bit will be cleared
0	PACKET_ERR_INT	R/W	0h	PACKET_ERR_INT: Packet Error Interrupt Flag User and privilege mode (read): 0 = no interrupt occured 1 = interrupt occured Privilege mode (write): 0 = no influence on bit 1 = bit will be cleared

Copyright © 2025 Texas Instruments Incorporated

11.8.1.3.6 OFF1 Register (Offset = 14h) [Reset = 00000000h]

OFF1 is shown in Table 11-1592.

Return to the Summary Table.

Interrupt offset for high priority level

Table 11-1592. OFF1 Register Field Descriptions

Bit	Field	Type	Reset	Description
31-5	RESERVED	R	0h	Reserved
4-0	OFFSET	R	0h	OFFSET User and privilege mode (read): Bit Encoding Interrupt 00000 Phantom 00001 Packet Error 00010 Destination 0 Error 00011 Destination 1 Error 00100 Destination 2 Error 00101 Destination 3 Error 00110 Source Overflow 00111 Buffer Overflow 01000 Bus Error 01001 Destination 0 Region 1 01010 Destination 0 Region 2 01011 Destination 1 Region 1 01100 Destination 1 Region 2 01101 Destination 2 Region 1 01110 Destination 2 Region 2 01111 Destination 3 Region 1 10000 Destination 3 Region 2 10001 End of Buffer 10010 Programmable Buffer 10011 - 11111 Reserved Reading the offset will clear the corresponding flag in DMMINTFLAG. Privilege and user mode (write): writes have no effect

Copyright © 2025 Texas Instruments Incorporated

11.8.1.3.7 OFF2 Register (Offset = 18h) [Reset = 00000000h]

OFF2 is shown in Table 11-1593.

Return to the Summary Table.

Interrupt offset for low priority level

Table 11-1593. OFF2 Register Field Descriptions

Bit	Field	Type	Reset	Description
31-5	RESERVED	R	0h	Reserved
4-0	OFFSET	R	0h	OFFSET User and privilege mode (read): Bit Encoding Interrupt 00000 Phantom 00001 Packet Error 00010 Destination 0 Error 00011 Destination 1 Error 00100 Destination 2 Error 00101 Destination 3 Error 00110 Source Overflow 00111 Buffer Overflow 01000 Bus Error 01001 Destination 0 Region 1 01010 Destination 0 Region 2 01011 Destination 1 Region 1 01100 Destination 1 Region 2 01101 Destination 2 Region 1 01110 Destination 2 Region 2 01111 Destination 3 Region 1 10000 Destination 3 Region 2 10001 End of Buffer 10010 Programmable Buffer 10011 - 11111 Reserved Reading the offset will clear the corresponding flag in DMMINTFLAG. Privilege and user mode (write): writes have no effect

Copyright © 2025 Texas Instruments Incorporated

11.8.1.3.8 DDMDEST Register (Offset = 1Ch) [Reset = 00000000h]

DDMDEST is shown in Table 11-1594.

Return to the Summary Table.

Configuration of Buffer for Direct Data Mode

Table 11-1594. DDMDEST Register Field Descriptions

Bit	Field	Type	Reset	Description
31-0	STARTADDR	R/W	0h	STARTADDR[31:0] These bits define the starting address of the buffer. The starting address has to be a multiple of the blocksize chosen in DMMDDMBL. User and privilege mode (read): current start address Privilege mode (write): sets start address to value written

Copyright © 2025 Texas Instruments Incorporated

11.8.1.3.9 DDMBL Register (Offset = 20h) [Reset = 00000000h]

DDMBL is shown in Table 11-1595.

Return to the Summary Table.

Defines the blocksize for the buffer in Direct Data Mode

Table 11-1595. DDMBL Register Field Descriptions

Bit	Field	Type	Reset	Description
31-4	RESERVED	R	0h	Reserved
3-0	BLOCKSIZE	R/W	0h	BLOCKSIZE These bits define the length of the buffer region. If all bits are 0, the region is disabled and no data will be stored. User and privilege mode (read): current start address Privilege mode (write): BLOCKSIZE [3:0] Region Size (in byte) 0000 0 0001 32 0010 64 0011 128 0100 256 0101 512 0110 1k 0111 2k 1000 4k 1001 8k 1010 16k 1011 32k 1100 Reserved 1101 Reserved 1110 Reserved 1111 Reserved

Copyright © 2025 Texas Instruments Incorporated

11.8.1.3.10 DDMPT Register (Offset = 24h) [Reset = 00000000h]

DDMPT is shown in Table 11-1596.

Return to the Summary Table.

Pointer to the last written entry in the buffer

Table 11-1596. DDMPT Register Field Descriptions

Bit	Field	Type	Reset	Description
31-15	RESERVED	R	0h	Reserved
14-0	POINTER	R	0h	POINTER These bits hold the pointer to the next entry to be written in the buffer. The pointer points to the byte aligned address. If in 16-bit DDM mode, bit 0 will be discarded. If in 32-bit DDM mode, bit 0 and 1 will be discarded. User and privilege mode (read): next pointer entry Privilege mode (write): writes have no effect

Copyright © 2025 Texas Instruments Incorporated

11.8.1.3.11 INTPT Register (Offset = 28h) [Reset = 00000000h]

INTPT is shown in Table 11-1597.

Return to the Summary Table.

Programmable Interrupt Pointer

Table 11-1597. INTPT Register Field Descriptions

Bit	Field	Type	Reset	Description
31-15	RESERVED	R	0h	Reserved
14-0	INTPT	R/W	0h	INTPT: Interrupt Pointer When the buffer pointer (DMMDDMPT) matches the programmed value in DMMINTPT and the PROG_BUF interrupt is set, a interrupt is generated. User and privilege mode (read): current interrupt pointer Privilege mode (write): new interrupt pointer

Copyright © 2025 Texas Instruments Incorporated

11.8.1.3.12 DEST0REG1 Register (Offset = 2Ch) [Reset = 00000000h]

DEST0REG1 is shown in Table 11-1598.

Return to the Summary Table.

Defines Region 1 for Destination 0

Table 11-1598. DEST0REG1 Register Field Descriptions

Bit	Field	Type	Reset	Description
31-18	BASEADDR	R/W	0h	BASEADDR [31:18] These bits define the base address of the 256kB region where the buffer is located. User and privilege mode (read): current start address Privilege mode (write): sets base address to value written
17-0	BLOCKADDR	R/W	0h	BLOCKADDR [17:0] These bits define the starting address of the buffer in the 256kB page. The starting address has to be a multiple of the blocksize chosen in DMMDEST0BL1. User and privilege mode (read): current start address Privilege mode (write): sets start address to value written

Copyright © 2025 Texas Instruments Incorporated

11.8.1.3.13 DEST0BL1 Register (Offset = 30h) [Reset = 00000000h]

DEST0BL1 is shown in Table 11-1599.

Return to the Summary Table.

Defines the blocksize for the buffer for Destination 0 Region 1

Table 11-1599. DEST0BL1 Register Field Descriptions

Bit	Field	Type	Reset	Description
31-4	RESERVED	R	0h	Reserved
3-0	BLOCKSIZE	R/W	0h	BLOCKSIZE These bits define the length of the buffer region. If all bits are 0, the region is disabled and no data will be stored. User and privilege mode (read): current block size Privilege mode (write): BLOCKSIZE [3:0] Region Size (in byte) 0000 0k 0001 1k 0010 2k 0011 4k 0100 8k 0101 16k 0110 32k 0111 64k 1000 128k 1001 256k 1010 Reserved 1011 Reserved 1100 Reserved 1101 Reserved 1110 Reserved 1111 Reserved

Copyright © 2025 Texas Instruments Incorporated

11.8.1.3.14 DEST0REG2 Register (Offset = 34h) [Reset = 00000000h]

DEST0REG2 is shown in Table 11-1600.

Return to the Summary Table.

Defines Region 2 for Destination 0

Table 11-1600. DEST0REG2 Register Field Descriptions

Bit	Field	Type	Reset	Description
31-18	BASEADDR	R/W	0h	BASEADDR [31:18] These bits define the base address of the 256kB region where the buffer is located. User and privilege mode (read): current start address Privilege mode (write): sets base address to value written
17-0	BLOCKADDR	R/W	0h	BLOCKADDR [17:0] These bits define the starting address of the buffer in the 256kB page. The starting address has to be a multiple of the blocksize chosen in DMMDEST0BL2. User and privilege mode (read): current start address Privilege mode (write): sets start address to value written

Copyright © 2025 Texas Instruments Incorporated

11.8.1.3.15 DEST0BL2 Register (Offset = 38h) [Reset = 00000000h]

DEST0BL2 is shown in Table 11-1601.

Return to the Summary Table.

Defines the blocksize for the buffer for Destination 0 Region 2

Table 11-1601. DEST0BL2 Register Field Descriptions

Bit	Field	Type	Reset	Description
31-4	RESERVED	R	0h	Reserved
3-0	BLOCKSIZE	R/W	0h	BLOCKSIZE These bits define the length of the buffer region. If all bits are 0, the region is disabled and no data will be stored. User and privilege mode (read): current block size Privilege mode (write): BLOCKSIZE [3:0] Region Size (in byte) 0000 0k 0001 1k 0010 2k 0011 4k 0100 8k 0101 16k 0110 32k 0111 64k 1000 128k 1001 256k 1010 Reserved 1011 Reserved 1100 Reserved 1101 Reserved 1110 Reserved 1111 Reserved

Copyright © 2025 Texas Instruments Incorporated

11.8.1.3.16 DEST1REG1 Register (Offset = 3Ch) [Reset = 00000000h]

DEST1REG1 is shown in Table 11-1602.

Return to the Summary Table.

Defines Region 1 for Destination1

Table 11-1602. DEST1REG1 Register Field Descriptions

Bit	Field	Type	Reset	Description
31-18	BASEADDR	R/W	0h	BASEADDR [31:18] These bits define the base address of the 256kB region where the buffer is located. User and privilege mode (read): current start address Privilege mode (write): sets base address to value written
17-0	BLOCKADDR	R/W	0h	BLOCKADDR [17:0] These bits define the starting address of the buffer in the 256kB page. The starting address has to be a multiple of the blocksize chosen in DMMDEST1BL1. User and privilege mode (read): current start address Privilege mode (write): sets start address to value written

Copyright © 2025 Texas Instruments Incorporated

11.8.1.3.17 DEST1BL1 Register (Offset = 40h) [Reset = 00000000h]

DEST1BL1 is shown in Table 11-1603.

Return to the Summary Table.

Defines the blocksize for the buffer for Destination 1 Region 1

Table 11-1603. DEST1BL1 Register Field Descriptions

Bit	Field	Type	Reset	Description
31-4	RESERVED	R	0h	Reserved
3-0	BLOCKSIZE	R/W	0h	BLOCKSIZE These bits define the length of the buffer region. If all bits are 0, the region is disabled and no data will be stored. User and privilege mode (read): current block size Privilege mode (write): BLOCKSIZE [3:0] Region Size (in byte) 0000 0k 0001 1k 0010 2k 0011 4k 0100 8k 0101 16k 0110 32k 0111 64k 1000 128k 1001 256k 1010 Reserved 1011 Reserved 1100 Reserved 1101 Reserved 1110 Reserved 1111 Reserved

Copyright © 2025 Texas Instruments Incorporated

11.8.1.3.18 DEST1REG2 Register (Offset = 44h) [Reset = 00000000h]

DEST1REG2 is shown in Table 11-1604.

Return to the Summary Table.

Defines Region 2 for Destination 1

Table 11-1604. DEST1REG2 Register Field Descriptions

Bit	Field	Type	Reset	Description
31-18	BASEADDR	R/W	0h	BASEADDR [31:18] These bits define the base address of the 256kB region where the buffer is located. User and privilege mode (read): current start address Privilege mode (write): sets base address to value written
17-0	BLOCKADDR	R/W	0h	BLOCKADDR [17:0] These bits define the starting address of the buffer in the 256kB page. The starting address has to be a multiple of the blocksize chosen in DMMDEST1BL2. User and privilege mode (read): current start address Privilege mode (write): sets start address to value written

Copyright © 2025 Texas Instruments Incorporated

11.8.1.3.19 DEST1BL2 Register (Offset = 48h) [Reset = 00000000h]

DEST1BL2 is shown in Table 11-1605.

Return to the Summary Table.

Defines the blocksize for the buffer for Destination 1 Region 2

Table 11-1605. DEST1BL2 Register Field Descriptions

Bit	Field	Type	Reset	Description
31-4	RESERVED	R	0h	Reserved
3-0	BLOCKSIZE	R/W	0h	BLOCKSIZE These bits define the length of the buffer region. If all bits are 0, the region is disabled and no data will be stored. User and privilege mode (read): current block size Privilege mode (write): BLOCKSIZE [3:0] Region Size (in byte) 0000 0k 0001 1k 0010 2k 0011 4k 0100 8k 0101 16k 0110 32k 0111 64k 1000 128k 1001 256k 1010 Reserved 1011 Reserved 1100 Reserved 1101 Reserved 1110 Reserved 1111 Reserved

Copyright © 2025 Texas Instruments Incorporated

11.8.1.3.20 DEST2REG1 Register (Offset = 4Ch) [Reset = 00000000h]

DEST2REG1 is shown in Table 11-1606.

Return to the Summary Table.

Defines Region 1 for Destination 2

Table 11-1606. DEST2REG1 Register Field Descriptions

Bit	Field	Type	Reset	Description
31-18	BASEADDR	R/W	0h	BASEADDR [31:18] These bits define the base address of the 256kB region where the buffer is located. User and privilege mode (read): current start address Privilege mode (write): sets base address to value written
17-0	BLOCKADDR	R/W	0h	BLOCKADDR [17:0] These bits define the starting address of the buffer in the 256kB page. The starting address has to be a multiple of the blocksize chosen in DMMDEST2BL1. User and privilege mode (read): current start address Privilege mode (write): sets start address to value written

Copyright © 2025 Texas Instruments Incorporated

11.8.1.3.21 DEST2BL1 Register (Offset = 50h) [Reset = 00000000h]

DEST2BL1 is shown in Table 11-1607.

Return to the Summary Table.

Defines the blocksize for the buffer for Destination 2 Region 1

Table 11-1607. DEST2BL1 Register Field Descriptions

Bit	Field	Type	Reset	Description
31-4	RESERVED	R	0h	Reserved
3-0	BLOCKSIZE	R/W	0h	BLOCKSIZE These bits define the length of the buffer region. If all bits are 0, the region is disabled and no data will be stored. User and privilege mode (read): current block size Privilege mode (write): BLOCKSIZE [3:0] Region Size (in byte) 0000 0k 0001 1k 0010 2k 0011 4k 0100 8k 0101 16k 0110 32k 0111 64k 1000 128k 1001 256k 1010 Reserved 1011 Reserved 1100 Reserved 1101 Reserved 1110 Reserved 1111 Reserved

Copyright © 2025 Texas Instruments Incorporated

11.8.1.3.22 DEST2REG2 Register (Offset = 54h) [Reset = 00000000h]

DEST2REG2 is shown in Table 11-1608.

Return to the Summary Table.

Defines Region 2 for Destination 2

Table 11-1608. DEST2REG2 Register Field Descriptions

Bit	Field	Type	Reset	Description
31-18	BASEADDR	R/W	0h	BASEADDR [31:18] These bits define the base address of the 256kB region where the buffer is located. User and privilege mode (read): current start address Privilege mode (write): sets base address to value written
17-0	BLOCKADDR	R/W	0h	BLOCKADDR [17:0] These bits define the starting address of the buffer in the 256kB page. The starting address has to be a multiple of the blocksize chosen in DMMDEST2BL2. User and privilege mode (read): current start address Privilege mode (write): sets start address to value written

Copyright © 2025 Texas Instruments Incorporated

11.8.1.3.23 DEST2BL2 Register (Offset = 58h) [Reset = 00000000h]

DEST2BL2 is shown in Table 11-1609.

Return to the Summary Table.

Defines the blocksize for the buffer for Destination 2 Region 2

Table 11-1609. DEST2BL2 Register Field Descriptions

Bit	Field	Type	Reset	Description
31-4	RESERVED	R	0h	Reserved
3-0	BLOCKSIZE	R/W	0h	BLOCKSIZE These bits define the length of the buffer region. If all bits are 0, the region is disabled and no data will be stored. User and privilege mode (read): current block size Privilege mode (write): BLOCKSIZE [3:0] Region Size (in byte) 0000 0k 0001 1k 0010 2k 0011 4k 0100 8k 0101 16k 0110 32k 0111 64k 1000 128k 1001 256k 1010 Reserved 1011 Reserved 1100 Reserved 1101 Reserved 1110 Reserved 1111 Reserved

Copyright © 2025 Texas Instruments Incorporated

11.8.1.3.24 DEST3REG1 Register (Offset = 5Ch) [Reset = 00000000h]

DEST3REG1 is shown in Table 11-1610.

Return to the Summary Table.

Defines Region 1 for Destination 3

Table 11-1610. DEST3REG1 Register Field Descriptions

Bit	Field	Type	Reset	Description
31-18	BASEADDR	R/W	0h	BASEADDR [31:18] These bits define the base address of the 256kB region where the buffer is located. User and privilege mode (read): current start address Privilege mode (write): sets base address to value written
17-0	BLOCKADDR	R/W	0h	BLOCKADDR [17:0] These bits define the starting address of the buffer in the 256kB page. The starting address has to be a multiple of the blocksize chosen in DMMDEST3BL1. User and privilege mode (read): current start address Privilege mode (write): sets start address to value written

Copyright © 2025 Texas Instruments Incorporated

11.8.1.3.25 DEST3BL1 Register (Offset = 60h) [Reset = 00000000h]

DEST3BL1 is shown in Table 11-1611.

Return to the Summary Table.

Defines the blocksize for the buffer for Destination 3 Region 1

Table 11-1611. DEST3BL1 Register Field Descriptions

Bit	Field	Type	Reset	Description
31-4	RESERVED	R	0h	Reserved
3-0	BLOCKSIZE	R/W	0h	BLOCKSIZE These bits define the length of the buffer region. If all bits are 0, the region is disabled and no data will be stored. User and privilege mode (read): current block size Privilege mode (write): BLOCKSIZE [3:0] Region Size (in byte) 0000 0k 0001 1k 0010 2k 0011 4k 0100 8k 0101 16k 0110 32k 0111 64k 1000 128k 1001 256k 1010 Reserved 1011 Reserved 1100 Reserved 1101 Reserved 1110 Reserved 1111 Reserved

Copyright © 2025 Texas Instruments Incorporated

11.8.1.3.26 DEST3REG2 Register (Offset = 64h) [Reset = 00000000h]

DEST3REG2 is shown in Table 11-1612.

Return to the Summary Table.

Defines Region 2 for Destination 3

Table 11-1612. DEST3REG2 Register Field Descriptions

Bit	Field	Type	Reset	Description
31-18	BASEADDR	R/W	0h	BASEADDR [31:18] These bits define the base address of the 256kB region where the buffer is located. User and privilege mode (read): current start address Privilege mode (write): sets base address to value written
17-0	BLOCKADDR	R/W	0h	BLOCKADDR [17:0] These bits define the starting address of the buffer in the 256kB page. The starting address has to be a multiple of the blocksize chosen in DMMDEST3BL2. User and privilege mode (read): current start address Privilege mode (write): sets start address to value written

Copyright © 2025 Texas Instruments Incorporated

11.8.1.3.27 DEST3BL2 Register (Offset = 68h) [Reset = 00000000h]

DEST3BL2 is shown in Table 11-1613.

Return to the Summary Table.

Defines the blocksize for the buffer for Destination 3 Region 2

Table 11-1613. DEST3BL2 Register Field Descriptions

Bit	Field	Type	Reset	Description
31-4	RESERVED	R	0h	Reserved
3-0	BLOCKSIZE	R/W	0h	BLOCKSIZE These bits define the length of the buffer region. If all bits are 0, the region is disabled and no data will be stored. User and privilege mode (read): current block size Privilege mode (write): BLOCKSIZE [3:0] Region Size (in byte) 0000 0k 0001 1k 0010 2k 0011 4k 0100 8k 0101 16k 0110 32k 0111 64k 1000 128k 1001 256k 1010 Reserved 1011 Reserved 1100 Reserved 1101 Reserved 1110 Reserved 1111 Reserved

Copyright © 2025 Texas Instruments Incorporated

11.8.1.3.28 DMMPC0 Register (Offset = 6Ch) [Reset = 00000000h]

DMMPC0 is shown in Table 11-1614.

Return to the Summary Table.

Defines functional or GIO mode of pins

Table 11-1614. DMMPC0 Register Field Descriptions

Bit	Field	Type	Reset	Description
31-19	RESERVED	R	0h	Reserved
18	ENAFUNC	R/W	0h	ENAFUNC: Functional mode of DMMENA pin This bit defines whether the pin is used in functional mode or in GIO mode User and privilege mode (read): 0 = Pin is used in GIO mode 1 = Pin is used in Functional mode Privilege mode (write): 0 = Pin is used in GIO mode 1 = Pin is used in Functional mode
17-2	DATAxFUNC	R/W	0h	DATAxFUNC: Functional mode of DMMDATA[x] pin This bit defines whether the pin is used in functional mode or in GIO mode User and privilege mode (read): 0 = Pin is used in GIO mode 1 = Pin is used in FunctionaPrivilege mode (write): 0 = Pin is used in GIO mode 1 = Pin is used in Functional model mode
1	CLKFUNC	R/W	0h	CLKFUNC: Functional mode of DMMCLK pin This bit defines whether the pin is used in functional mode or in GIO mode User and privilege mode (read): 0 = Pin is used in GIO mode 1 = Pin is used in Functional mode Privilege mode (write): 0 = Pin is used in GIO mode 1 = Pin is used in Functional mode
0	SYNCFUNC	R/W	0h	SYNCFUNC: Functional mode of DMMSYNC pin This bit defines whether the pin is used in functional mode or in GIO mode User and privilege mode (read): 0 = Pin is used in GIO mode 1 = Pin is used in Functional mode Privilege mode (write): 0 = Pin is used in GIO mode 1 = Pin is used in Functional mode

Copyright © 2025 Texas Instruments Incorporated

11.8.1.3.29 DMMPC1 Register (Offset = 70h) [Reset = 00000000h]

DMMPC1 is shown in Table 11-1615.

Return to the Summary Table.

Defines direction of pins

Table 11-1615. DMMPC1 Register Field Descriptions

Bit	Field	Type	Reset	Description
31-19	RESERVED	R	0h	Reserved
18	ENADIR	R/W	0h	ENADIR: Direction of DMMENA pin This bit defines whether the pin is used as input or output in GIO mode User and privilege mode (read): 0 = Pin is used as input 1 = Pin is used as output Privilege mode (write): 0 = Pin is set to input 1 = Pin is set to output
17-2	DATAxDIR	R/W	0h	DATAxDIR: Direction of DMMDATA[x] pin This bit defines whether the pin is used as input or output in GIO mode User and privilege mode (read): 0 = Pin is used as input 1 = Pin is used as output Privilege mode (write): 0 = Pin is set to input 1 = Pin is set to output
1	CLKDIR	R/W	0h	CLKDIR: Direction of DMMCLK pin This bit defines whether the pin is used as input or output in GIO mode User and privilege mode (read): 0 = Pin is used as input 1 = Pin is used as output Privilege mode (write): 0 = Pin is set to input 1 = Pin is set to output
0	SYNCDIR	R/W	0h	SYNCDIR: Direction of DMMSYNC pin This bit defines whether the pin is used as input or output in GIO mode User and privilege mode (read): 0 = Pin is used as input 1 = Pin is used as output Privilege mode (write): 0 = Pin is set to input 1 = Pin is set to output

Copyright © 2025 Texas Instruments Incorporated

11.8.1.3.30 DMMPC2 Register (Offset = 74h) [Reset = 00000000h]

DMMPC2 is shown in Table 11-1616.

Return to the Summary Table.

Input level of pins

Table 11-1616. DMMPC2 Register Field Descriptions

Bit	Field	Type	Reset	Description
31-19	RESERVED	R	0h	Reserved
18	ENAIN	R/W	0h	ENAIN: DMMENA input This bit reflects the state of the pin in all modes User and privilege mode (read): 0 = Logic low (input voltage is VIL or lower) 1 = Logic high (input voltage is VIH or higher) Privilege mode (write): Writes to this bit have no effect.
17-2	DATAxIN	R/W	0h	DATAxIN: DMMDATA[x] input This bit reflects the state of the pin in all modes User and privilege mode (read): 0 = Logic low (input voltage is VIL or lower) 1 = Logic high (input voltage is VIH or higher) Privilege mode (write): Writes to this bit have no effect
1	CLKIN	R/W	0h	CLKIN: DMMCLK input This bit reflects the state of the pin in all modes User and privilege mode (read): 0 = Logic low (input voltage is VIL or lower) 1 = Logic high (input voltage is VIH or higher) Privilege mode (write): Writes to this bit have no effect
0	SYNCIN	R/W	0h	SYNCIN: DMMSYNC input This bit reflects the state of the pin in all modes User and privilege mode (read): 0 = Logic low (input voltage is VIL or lower) 1 = Logic high (input voltage is VIH or higher) Privilege mode (write): Writes to this bit have no effect.

Copyright © 2025 Texas Instruments Incorporated

11.8.1.3.31 DMMPC3 Register (Offset = 78h) [Reset = 00000000h]

DMMPC3 is shown in Table 11-1617.

Return to the Summary Table.

Sets pins to high or low

Table 11-1617. DMMPC3 Register Field Descriptions

Bit	Field	Type	Reset	Description
31-19	RESERVED	R	0h	Reserved
18	ENAOUT	R/W	0h	ENAOUT: Output state of DMMENA pin This bit sets the pin to logic low or high level User and privilege mode (read): 0 = Logic low (output voltage is VOL or lower) 1 = Logic high (output voltage is VOH or higher) Privilege mode (write): 0 = Logic low (output voltage is set to VOL or lower) 1 = Logic high (output voltage is set to VOH or higher)
17-2	DATAxOUT	R/W	0h	DATAxOUT: Output state of DMMDATA[x] pin This bit sets the pin to logic low or high level User and privilege mode (read): 0 = Logic low (output voltage is VOL or lower) 1 = Logic high (output voltage is VOH or higher) Privilege mode (write): 0 = Logic low (output voltage is set to VOL or lower) 1 = Logic high (output voltage is set to VOH or higher)
1	CLKOUT	R/W	0h	CLKOUT: Output state of DMMCLK pin This bit sets the pin to logic low or high level User and privilege mode (read): 0 = Logic low (output voltage is VOL or lower) 1 = Logic high (output voltage is VOH or higher) Privilege mode (write): 0 = Logic low (output voltage is set to VOL or lower) 1 = Logic high (output voltage is set to VOH or higher)
0	SYNCOUT	R/W	0h	SYNCOUT: Output state of DMMSYNC pin This bit sets the pin to logic low or high level User and privilege mode (read): 0 = Logic low (output voltage is VOL or lower) 1 = Logic high (output voltage is VOH or higher) Privilege mode (write): 0 = Logic low (output voltage is set to VOL or lower) 1 = Logic high (output voltage is set to VOH or higher)

Copyright © 2025 Texas Instruments Incorporated

11.8.1.3.32 DMMPC4 Register (Offset = 7Ch) [Reset = 00000000h]

DMMPC4 is shown in Table 11-1618.

Return to the Summary Table.

Sets pins to high

Table 11-1618. DMMPC4 Register Field Descriptions

Bit	Field	Type	Reset	Description
31-19	RESERVED	R	0h	Reserved
18	ENASET	R/W	0h	ENASET: Sets output state of DMMENA pin to logic high Value in the ENASET bit sets the data output control register bit to 1 regardless of the current value in the ENAOUT bit User and privilege mode (read): 0 = Logic low (output voltage is VOL or lower) 1 = Logic high (output voltage is VOH or higher) Privilege mode (write): 0 = leaves the pin unchanged 1 = Sets the pin to Logic high (output voltage is set to VOH or higher)
17-2	DATAxSET	R/W	0h	DATAxSET: Sets output state of DMMDATA[x] pin to logic high Value in the DATAxSET bit sets the data output control register bit to 1 regardless of the current value in the DATAxOUT bit User and privilege mode (read): 0 = Logic low (output voltage is VOL or lower) 1 = Logic high (output voltage is VOH or higher) Privilege mode (write): 0 = leaves the pin unchanged 1 = Sets the pin to Logic high (output voltage is set to VOH or higher)
1	CLKSET	R/W	0h	CLKSET: Sets output state of DMMCLK pin to logic high Value in the CLKSET bit sets the data output control register bit to 1 regardless of the current value in the CLKOUT bit User and privilege mode (read): 0 = Logic low (output voltage is VOL or lower) 1 = Logic high (output voltage is VOH or higher) Privilege mode (write): 0 = leaves the pin unchanged 1 = Sets the pin to Logic high (output voltage is set to VOH or higher)
0	SYNCSET	R/W	0h	SYNCSET: Sets output state of DMMSYNC pin logic high Value in the SYNCSET bit sets the data output control register bit to 1 regardless of the current value in the SYNCOUT bit User and privilege mode (read): 0 = Logic low (output voltage is VOL or lower) 1 = Logic high (output voltage is VOH or higher) Privilege mode (write): 0 = leaves the pin unchanged 1 = Sets the pin to Logic high (output voltage is set to VOH or higher)

Copyright © 2025 Texas Instruments Incorporated

11.8.1.3.33 DMMPC5 Register (Offset = 80h) [Reset = 00000000h]

DMMPC5 is shown in Table 11-1619.

Return to the Summary Table.

Sets pins to low

Table 11-1619. DMMPC5 Register Field Descriptions

Bit	Field	Type	Reset	Description
31-19	RESERVED	R	0h	Reserved
18	ENACLR	R/W	0h	ENACLR: Sets output state of DMMENA pin to logic low Value in the ENACLR bit clears the data output control register bit to 0 regardless of the current value in the ENAOUT bit User and privilege mode (read): 0 = Logic low (output voltage is VOL or lower) 1 = Logic high (output voltage is VOH or higher) Privilege mode (write): 0 = leaves the pin unchanged 1 = clears the pin to logic low (output voltage is set to VOL or lower)
17-2	DATAxCLR	R/W	0h	DATAxCLR: Sets output state of DMMDATA[x] pin to logic low Value in the DATAxCLR bit clears the data output control register bit to 0 regardless of the current value in the DATAxOUT bit User and privilege mode (read): 0 = Logic low (output voltage is VOL or lower) 1 = Logic high (output voltage is VOH or higher) Privilege mode (write): 0 = leaves the pin unchanged 1 = clears the pin to logic low (output voltage is set to VOL or lower)
1	CLKCLR	R/W	0h	CLKCLR: Sets output state of DMMCLK pin to logic low Value in the CLKCLR bit clears the data output control register bit to 0 regardless of the current value in the DATAxOUT bit User and privilege mode (read): 0 = Logic low (output voltage is VOL or lower) 1 = Logic high (output voltage is VOH or higher) Privilege mode (write): 0 = leaves the pin unchanged 1 = clears the pin to logic low (output voltage is set to VOL or lower)
0	SYNCCLR	R/W	0h	SYNCCLR: Sets output state of DMMSYNC pin to logic low Value in the SYNCCLR bit clears the data output control register bit to 0 regardless of the current value in the DATAxOUT bit User and privilege mode (read): 0 = Logic low (output voltage is VOL or lower) 1 = Logic high (output voltage is VOH or higher) Privilege mode (write): 0 = leaves the pin unchanged 1 = clears the pin to logic low (output voltage is set to VOL or lower)

Copyright © 2025 Texas Instruments Incorporated

11.8.1.3.34 DMMPC6 Register (Offset = 84h) [Reset = 00000000h]

DMMPC6 is shown in Table 11-1620.

Return to the Summary Table.

Configures open drain functionality of pin

Table 11-1620. DMMPC6 Register Field Descriptions

Bit	Field	Type	Reset	Description
31-19	RESERVED	R	0h	Reserved
18	ENAPDR	R/W	0h	ENAPDR: Open Drain enable Enables open drain functionality on pin if pin is configured as GIO output (DMMPC0.x=0 DMMPC1.x=1). If pin is configured as functional pin (DMMPC0.x=1), the open drain functionality is disabled. User and privilege mode (read): 0 = pin behaves as normal push/pull pin 1 = pin operates in open drain mode Privilege mode (write): 0 = configures pin as push/pull 1 = configures pin as open drain
17-2	DATAxPDR	R/W	0h	DATAxPDR: Open Drain enable Enables open drain functionality on pin if pin is configured as GIO output (DMMPC0.x=0 DMMPC1.x=1). If pin is configured as functional pin (DMMPC0.x=1), the open drain functionality is disabled. User and privilege mode (read): 0 = pin behaves as normal push/pull pin 1 = pin operates in open drain mode Privilege mode (write): 0 = configures pin as push/pull 1 = configures pin as open drain
1	CLKPDR	R/W	0h	CLKPDR: Open Drain enable Enables open drain functionality on pin if pin is configured as GIO output (DMMPC0.x=0 DMMPC1.x=1). If pin is configured as functional pin (DMMPC0.x=1), the open drain functionality is disabled. User and privilege mode (read): 0 = pin behaves as normal push/pull pin 1 = pin operates in open drain mode Privilege mode (write): 0 = configures pin as push/pull 1 = configures pin as open drain
0	SYNCPDR	R/W	0h	SYNCPDR: Open Drain enable Enables open drain functionality on pin if pin is configured as GIO output (DMMPC0.x=0 DMMPC1.x=1). If pin is configured as functional pin (DMMPC0.x=1), the open drain functionality is disabled. User and privilege mode (read): 0 = pin behaves as normal push/pull pin 1 = pin operates in open drain mode Privilege mode (write): 0 = configures pin as push/pull 1 = configures pin as open drain

Copyright © 2025 Texas Instruments Incorporated

11.8.1.3.35 DMMPC7 Register (Offset = 88h) [Reset = 00000000h]

DMMPC7 is shown in Table 11-1621.

Return to the Summary Table.

Enables/Disables pullup/pulldown structure of pin

Table 11-1621. DMMPC7 Register Field Descriptions

Bit	Field	Type	Reset	Description
31-19	RESERVED	R	0h	Reserved
18	ENAPDIS	R/W	0h	ENAPDIS: Pull disable Removes internal pullup/pulldown functionality from pin when configured as input pin (DMMPC1.x=0). User and privilege mode (read): 0 = pullup/pulldown functionality enabled 1 = pullup/pulldown functionality disabled Privilege mode (write): 0 = enables pullup/pulldown functionality 1 = disables pullup/pulldown functionality
17-2	DATAxPDIS	R/W	0h	DATAxPDIS: Pull disable Removes internal pullup/pulldown functionality from pin when configured as input pin (DMMPC1.x=0). User and privilege mode (read): 0 = pullup/pulldown functionality enabled 1 = pullup/pulldown functionality disabled Privilege mode (write): 0 = enables pullup/pulldown functionality 1 = disables pullup/pulldown functionality
1	CLKPDIS	R/W	0h	CLKPDIS: Pull disable Removes internal pullup/pulldown functionality from pin when configured as input pin (DMMPC1.x=0). User and privilege mode (read): 0 = pullup/pulldown functionality enabled 1 = pullup/pulldown functionality disabled Privilege mode (write): 0 = enables pullup/pulldown functionality 1 = disables pullup/pulldown functionality
0	SYNCPDIS	R/W	0h	SYNCPDIS: Pull disable Removes internal pullup/pulldown functionality from pin when configured as input pin (DMMPC1.x=0). User and privilege mode (read): 0 = pullup/pulldown functionality enabled 1 = pullup/pulldown functionality disabled Privilege mode (write): 0 = enables pullup/pulldown functionality 1 = disables pullup/pulldown functionality

Copyright © 2025 Texas Instruments Incorporated

11.8.1.3.36 DMMPC8 Register (Offset = 8Ch) [Reset = 0007FFFFh]

DMMPC8 is shown in Table 11-1622.

Return to the Summary Table.

Enables pullup or pulldown structure of pin

Table 11-1622. DMMPC8 Register Field Descriptions

Bit	Field	Type	Reset	Description
31-19	RESERVED	R	0h	Reserved
18	ENAPSEL	R/W	1h	ENAPSEL: Pull select Configures pullup or pulldown functionality if DMMPC7.x=0. User and privilege mode (read): 0 = pulldown functionality enabled 1 = pullup functionality enabled Privilege mode (write): 0 = enables pulldown functionality 1 = enables pullup functionality
17-2	DATAxPSEL	R/W	FFFFh	DATAxPSEL: Pull select Configures pullup or pulldown functionality if DMMPC7.x=0. User and privilege mode (read): 0 = pulldown functionality enabled 1 = pullup functionality enabled Privilege mode (write): 0 = enables pulldown functionality 1 = enables pullup functionality
1	CLKPDSEL	R/W	1h	CLKPDSEL: Pull select Configures pullup or pulldown functionality if DMMPC7.x=0. User and privilege mode (read): 0 = pulldown functionality enabled 1 = pullup functionality enabled Privilege mode (write): 0 = enables pulldown functionality 1 = enables pullup functionality
0	SYNCPSEL	R/W	1h	SYNCPSEL: Pull select Configures pullup or pulldown functionality if DMMPC7.x=0. User and privilege mode (read): 0 = pulldown functionality enabled 1 = pullup functionality enabled Privilege mode (write): 0 = enables pulldown functionality 1 = enables pullup functionality

11.8.2 Core Clock Comparator (CCC)

11.8.2.1 Description

Core Clock Comparator (CCC) supports single-shot and continuous mode of operation, such as DCC. In continuous mode, the programmed values are reloaded after every successful comparison.

The module accepts 7 clock inputs for clock 0 and clock 1. One of these input clocks is selected to counter 0 and counter 1. Counter 0 is a down counter and is preloaded with a value before enabling the module. Counter 1 is an up counter which operates on Clock 1.

At the expiry of counter 0, value in the counter 1 is compared against the programmed expected value of the counter. After a successful comparison, a Done signal is asserted in single-shot mode, whereas in continuous mode, counter 0 is reloaded for the next comparison. Margin value programmed provides the tolerance for the comparison. An error signal is asserted when the counter 1 value differs from the expected value beyond the tolerance range.

When an error occurs, the module stops comparison in both single-shot and continuous mode.

There is a timeout counter functioning on Clock 1. A timeout value must be loaded into the timeout counter before enabling the module. If the timeout counter expires before the expiry of counter 0, an error condition is

Copyright © 2025 Texas Instruments Incorporated

indicated. In continuous mode, after the successful comparison, the timeout value is also reloaded along with Counter 0.

11.8.2.2 Block Diagram

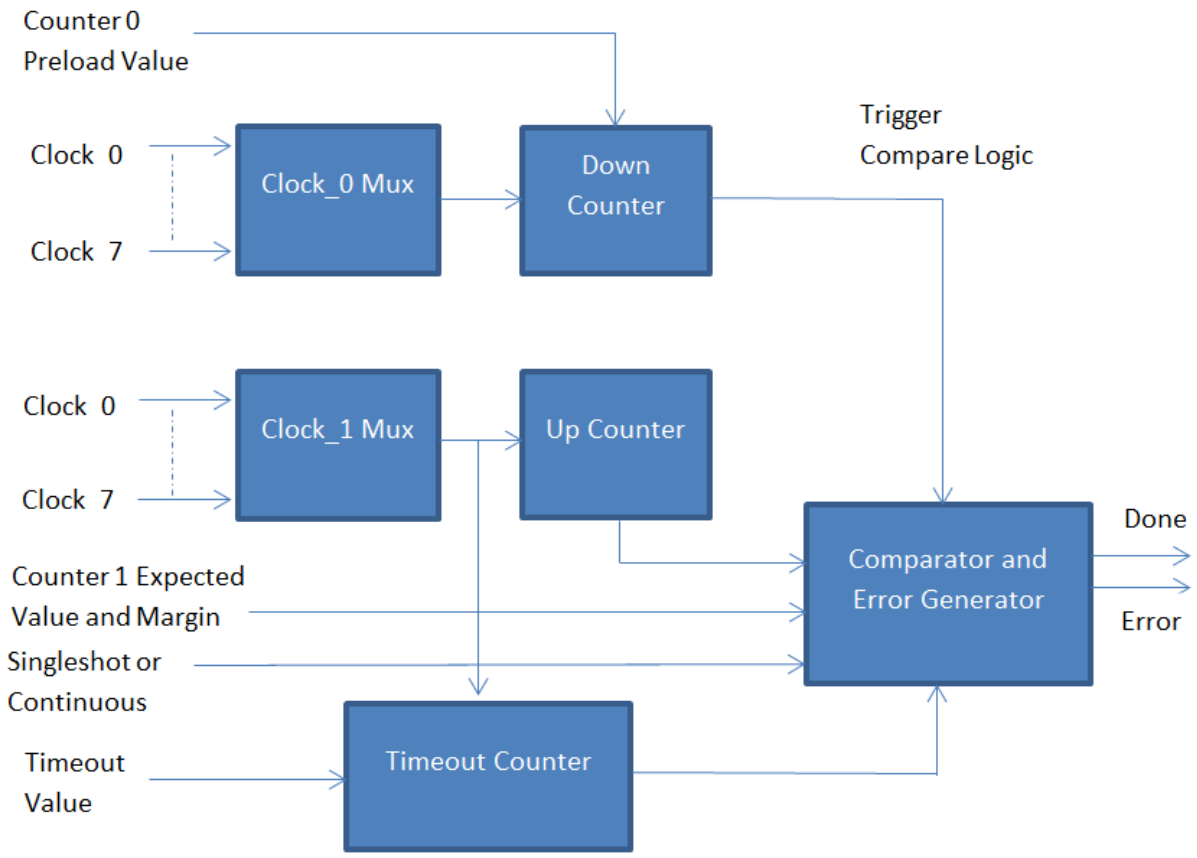

Figure 11-417. CCC Block Diagram

11.8.2.3 Perform Clock Comparison

The following are the steps to perform clock comparison.

1. Select Clock 0.
2. Select Clock 1.
3. Load value for down counting in counter 0.
4. Load expected value of counter 1.
5. Load Margin value for tolerance.
6. Set singleshot or continuous mode.
7. Load timeout value.
8. Enable Module.
9. Wait for Done or Error indication.

11.8.2.4 I/O Table

Table 11-1623. I/O Table

Signal	Input/Output	Description
async_rst_n	Input	Module Reset
vbusp_clk	Input	Clock

Copyright © 2025 Texas Instruments Incorporated

Table 11-1623. I/O Table (continued)

Signal	Input/Output	Description
clock0_src	Input	Input clocks for Counter 0
clock1_src	Input	Input clocks for Counter 1
clock0_sel	Input	Clock Selector for Counter 0
clock1_sel	Input	Clock Selector for Counter 1
count0_expiry_val	Input	Preload Value for Counter 0
count1_expected_val	Input	Expected value of Counter 1
disable_clk_output	Input	Cutoff clocks for the module
enable_module	Input	Enable for Clock comparator
margin_count	Input	Tolerance value for Comparator
singleshot_mode	Input	0->Continuous mode, 1-> Singleshot mode
count1_val_out	Output	Counter 1 value
counter_error	Output	Error Indicator
counter_done	Output	Successful comparison Indicator
mod_status	Output	Internal Status Indicator
async_error_indicator	Output	Error indicator without the synchronizer
timeout_err_count	Input	Preload value for Timeout Counter
atpg_reset_bypass	Input	DFT reset
atpg_clk	Input	DFT clock
icg_te	Input	Control for ICG
atpg_clk_bypass	Input	Control for ATPG clock

11.8.2.5 Recommended Programmation

- Clock source 1 must be faster than Clock source 0 for successful comparison of clocks.
- The timeout value must always be loaded for successful comparison. The timeout value must be greater than the duration of the comparison operation.

11.8.3 Dual Clock Comparator (DCC)

This section describes the dual-clock comparator (DCC) module.

11.8.3.1 Introduction

The primary purpose of a DCC module is to measure the frequency of a clock signal using a second known clock signal as a reference. Specifically, DCC is designed to detect drifts from the expected clock frequency. This capability can be used to ensure the correct frequency range for several different device clock sources, thereby enhancing the system safety metrics.

11.8.3.1.1 Main Features

The main features of each of the DCC modules are:

- Allows application to ensure that a fixed ratio is maintained between frequencies of two clock signals
- Supports the definition of a programmable tolerance window in terms of number of reference clock cycles
- Supports continuous monitoring without requiring application intervention
- Also supports a single-sequence mode for spot measurements
- Allows selection of clock source for each of the counters resulting in several specific use cases

11.8.3.1.2 Block Diagram

Figure 11-418 illustrates the main concept of the DCC module.

Copyright © 2025 Texas Instruments Incorporated

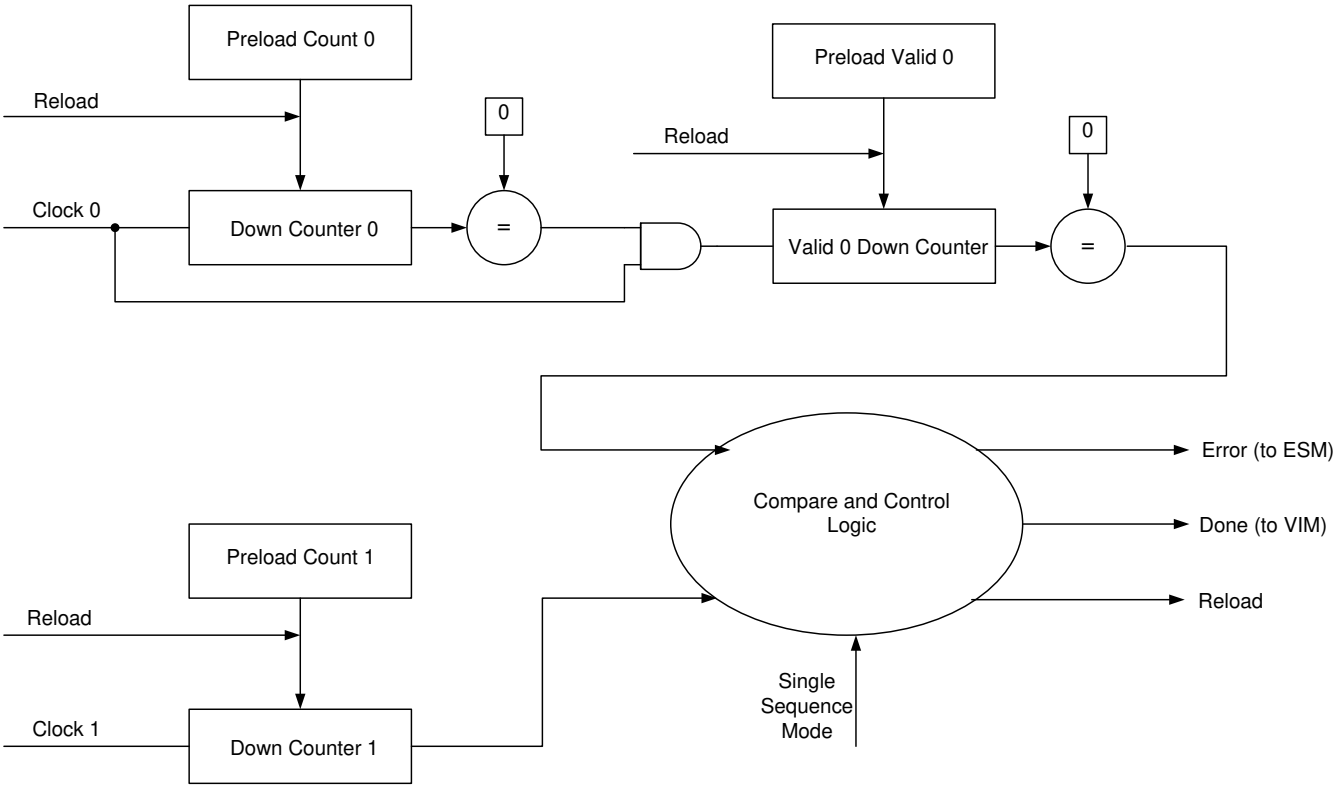

Figure 11-418. Block Diagram

Copyright © 2025 Texas Instruments Incorporated

11.8.3.2 Module Operation

As shown in Figure 11-418, the DCC contains two counters – counter0 and counter1, which are driven by two signals – clock0 and clock1. The application programs the seed values for both these counters. The application also configures the tolerance window time by configuring the valid counter for clock0.

Counter0 and counter1 both start counting simultaneously once the DCC is enabled. When counter0 counts down to zero, this automatically triggers the count down of the tolerance window counter (valid0).

The DCC module can be used in two different operating modes:

11.8.3.2.1 Continuous Monitoring Mode

In this mode, the DCC is used by the application to ensure that two clock signals maintain the correct frequency ratio. Suppose the application wants to ensure that the PLL output signal (clock source # 1) always maintains a fixed frequency relationship with the main oscillator (clock source # 0).

- In this case, the application can use the main oscillator as the clock0 signal (for counter0 and valid0) and the PLL output as the clock1 (for counter1).
- The seed values of counter0, valid0 and counter1 are selected such that if the actual frequencies of clock0 and clock1 are equal to their expected frequencies, then the counter1 will reach zero either at the same time as counter0 or during the count down of the valid0 counter.
- If the counter1 reaches zero during the count down of the valid0 counter, then all the counters (counter0, valid0, counter1) are reloaded with their initial seed values once valid0 has also counted down to zero.
- This sequence of counting down and checking then continues as long as there is no error, or until the DCC module is disabled.
- The counters also all get reloaded if the application resets and restarts the DCC module.

Error Conditions:

An error condition is generated by any one of the following:

1. Counter1 counts down to 0 before Counter0 reaches 0. This means that clock1 is faster than expected, or clock0 is slower than expected. It includes the case when clock0 is stuck at 1 or 0.
2. Counter1 does not reach 0 even when Counter0 and Valid0 have both reached 0. This means that clock1 is slower than expected. It includes the case when clock1 is stuck at 1 or 0.

Any error freezes the counters from counting. An application may then read out the counter values to help determine what caused the error.

11.8.3.2.1.1 Error Conditions

While operating in continuous mode, the counters get reloaded with the seed values and continue counting down under the following conditions:

- The module is reset or restarted by the application, OR
- Counter0, Valid 0 and Counter1 all reach 0 without any error

Copyright © 2025 Texas Instruments Incorporated

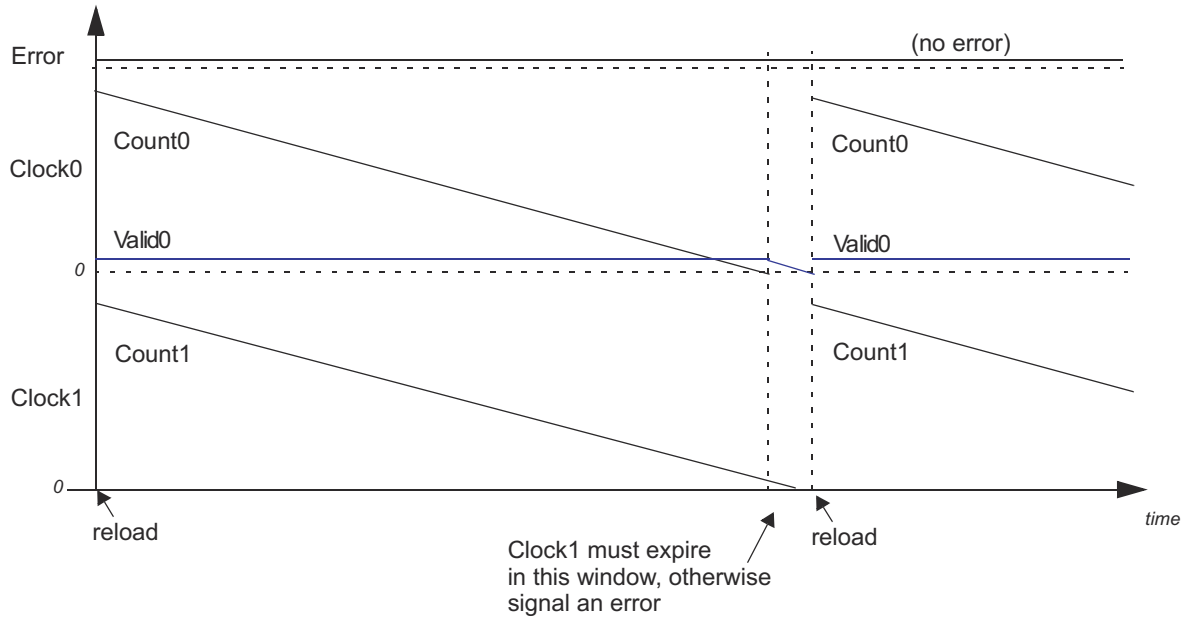

Figure 11-419. Counter Relationship

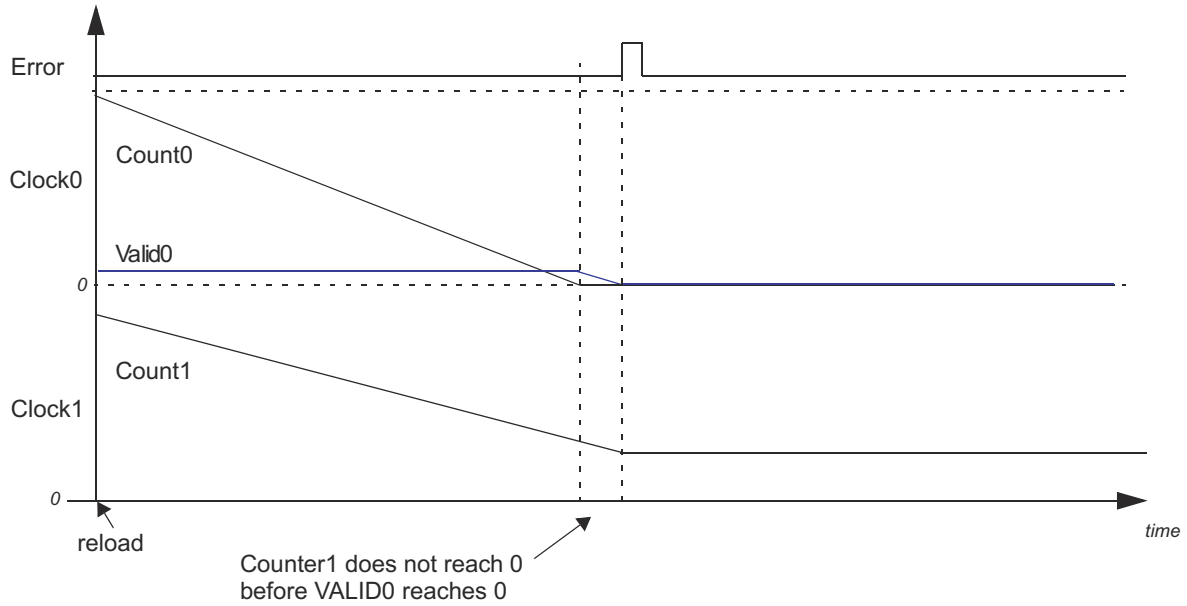

Figure 11-420. Clock1 Slower Than Clock0 - Results in an Error and Stops Counting

Copyright © 2025 Texas Instruments Incorporated

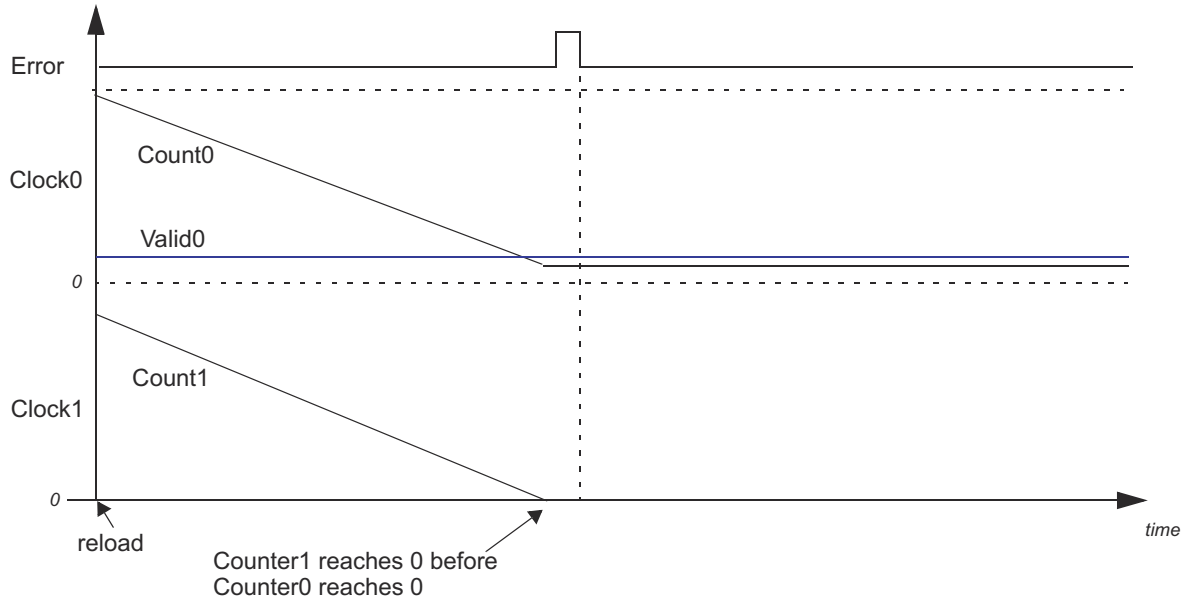

Figure 11-421. Clock1 Faster Than Clock0 - Results in an Error and Stops Counting

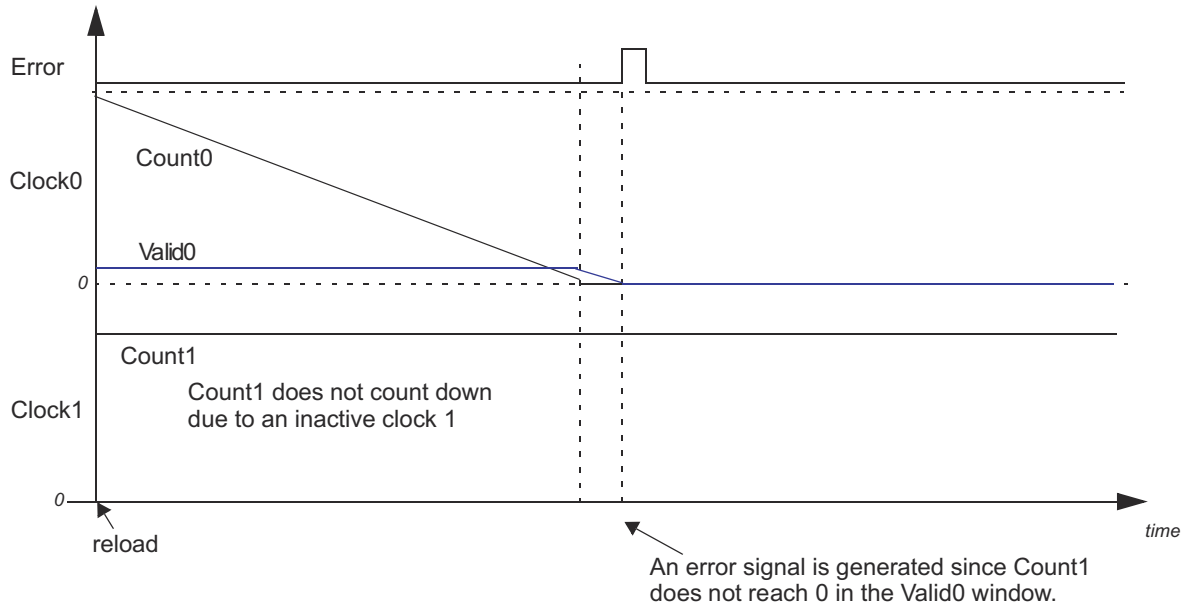

Figure 11-422. Clock1 Not Present - Results in an Error and Stops Counting

Copyright © 2025 Texas Instruments Incorporated

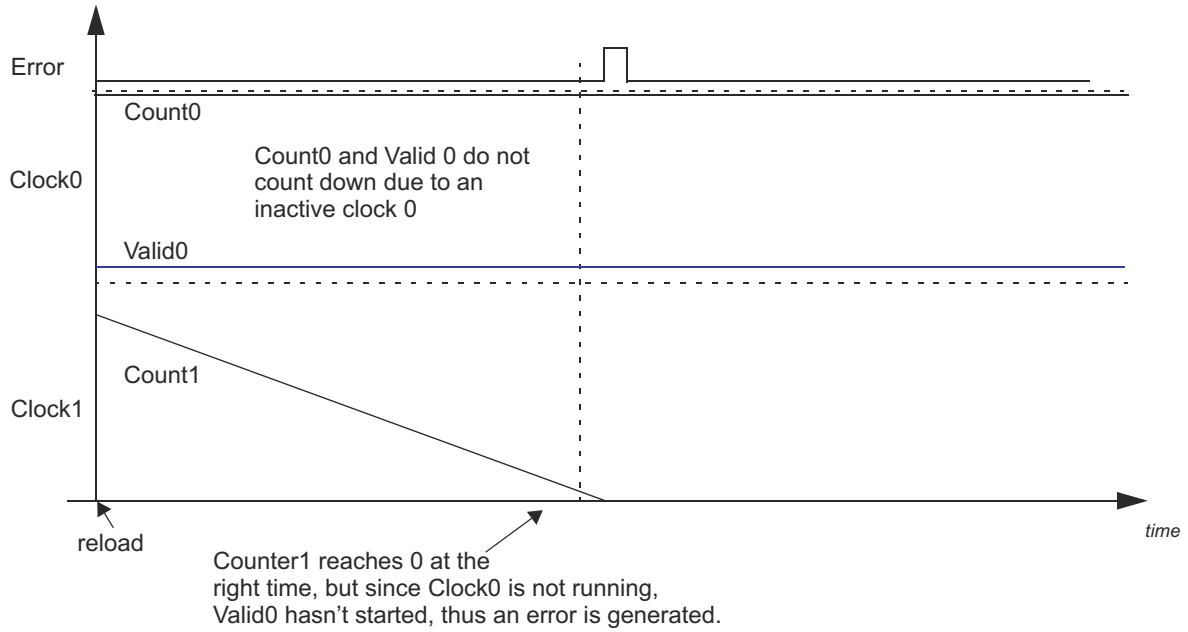

Figure 11-423. Clock0 Not Present - Results in an Error and Stops Counting

11.8.3.2.2 Single-Shot Measurement Mode

The DCC module can be programmed to count down one time by enabling the single-shot mode. In this mode, the DCC stops operating when the down counter0 and the valid counter0 reach 0. Alternatively, the DCC can be programmed to stop counting when the down counter1 reaches 0.

At the end of one sequence of counting down in this single-shot mode, the DCC gets disabled automatically, which prevents further counting. This mode is typically used for spot measurements of the frequency of a signal. This frequency could be an unknown for the application before the measurement.

Example Usage of Single-Shot Measurement Mode: Trimming the High-Frequency Low-Power Oscillator

A practical example of the usage of the spot measurement mode is in trimming the HF LPO (clock source # 5) using the main oscillator as a reference. This measurement sequence would proceed as follows:

- The application sets up the seed values for counter0 and valid0 for the duration of the measurement. Suppose the main oscillator frequency is 10 MHz and the intended duration of the measurement is 500 µs. The application needs to configure a seed value of 5000.
- These 5000 counts need to be divided between the counter0 and the valid0 counters. The minimum value for the valid0 seed is 4, so the application can configure counter0 seed value as 4996 and the valid0 seed value as 4.
- Suppose the HF LPO frequency is truly unknown. In this case the application can choose the maximum allowed seed value for counter1. This increases the probability of counter0 and valid0 counting down while the counter1 has still not fully counted down to zero. The maximum allowed seed value for counter1 is 1048575.
- Once the DCC is enabled, the counters counter0 and counter1 both start counting down from their seed values.
- When counter0 reaches zero, it automatically triggers the valid0 counter.
- When valid0 reaches zero, if counter1 is not zero as well, an ERROR status flag is set and a "DCC error" is sent to the ESM. Counter1 is also frozen so that it stops counting down any further. The application can enable an interrupt to be generated from the ESM whenever this DCC error is indicated. Refer the device datasheet to identify the ESM group and channel where the DCC error is connected.
- The DCC error interrupt service routine can then check the value of counter1 when the error was generated. Suppose that the counter1 now reads 1044575. This means that counter1 has counted 1048575 - 1044575,

Copyright © 2025 Texas Instruments Incorporated

or 4000 cycles within the 500-µs measurement period. This means that the average frequency of the HF LPO over this 500-µs period was 4000 cycles / 500 µs, or 8 MHz.
- The application then needs to clear the ERROR status flag and restart the DCC module so that it is ready for the next spot measurement.

If there is no error generated at the end of the sequence, then the DONE status flag is set and a DONE interrupt is generated. The application must clear the DONE flag before restarting the DCC.

The conditions that cause a DCC error are identical between the continuous monitoring mode and the single-shot measurement mode.

Error Conditions:

An error condition is generated by any one of the following:
1. Counter1 counts down to 0 before Counter0 reaches 0. This means that clock1 is faster than expected, or clock0 is slower than expected. It includes the case when clock0 is stuck at 1 or 0.
2. Counter1 does not reach 0 even when Counter0 and Valid0 have both reached 0. This means that clock1 is slower than expected. It includes the case when clock1 is stuck at 1 or 0.

Any error freezes the counters from counting. An application may then read out the counter values to help determine what caused the error.

Freezing Counters when Counter1 Reaches Zero:

The DCC module also allows the counters to be frozen when the counter1 reaches zero. This allows one of the clock sources for counter1 to be used as a reference for measuring one of the clock sources for counter0. The error conditions are the same as those where (counter0=0 and valid0=0) define the condition when the DCC counters are frozen. That is, an error is indicated if coutner0 and valid0 become zero while counter1 is still non-zero. In this case, however, the application would typically set up the seed values such that the counter1 will become zero before counter0. Essentially the measurement period is defined by the seed value of the counter1. Note that this is also an error condition, and the interrupt service routine can use the measurement period and the actual cycles counted by counter1 to determine the frequency of the clock0 signal.

11.8.3.3 MSS DCC Integration

4-DCC modules have been instantiated in the SOC as part of MSS. Clocks to the module are mentioned in the following sections.

11.8.3.3.1 Input Clock sources

Table 11-1624. MSS_DCCA Clocking

Clock Signal	Description	Source	REG Value for Selection
DCC_INPUT00_CLK	Primary Oscillator Clock	XTALCLK	0x0
DCC_INPUT01_CLK	Primary Oscillator Clock	RCCLK10	0x1
DCC_CLKSRC0_CLK	Counter 1 Clock Source	PLL_CORE_HSDIV0_CLKOUT2	0x0
DCC_CLKSRC1_CLK	Counter 1 Clock Source	MSS_CR5F_CLK	0x1
DCC_CLKSRC2_CLK	Counter 1 Clock Source	SYS_CLK	0x2
DCC_CLKSRC3_CLK	Counter 1 Clock Source	MSS_QSPI_CLK	0x3
DCC_CLKSRC4_CLK	Counter 1 Clock Source	MSS_RTIA_CLK	0x4
DCC_CLKSRC5_CLK	Counter 1 Clock Source	MSS_SPIA_CLK	0x5
DCC_CLKSRC6_CLK	Counter 1 Clock Source	MSS_MCANA_CLK	0x6
DCC_CLKSRC7_CLK	Counter 1 Clock Source	MSS_SCIA_CLK	0x7

Table 11-1625. MSS_DCCB Clocking

Clock Signal	Description	Source	REG Value for Selection
DCC_INPUT00_CLK	Primary Oscillator Clock	XTALCLK	0x0
DCC_INPUT01_CLK	Primary Oscillator Clock	RCCLK10	0x1

Copyright © 2025 Texas Instruments Incorporated

Table 11-1625. MSS_DCCB Clocking (continued)

Clock Signal	Description	Source	REG Value for Selection
DCC_INPUT02_CLK	Primary Oscillator Clock	SYS_CLK	0x2
DCC_CLKSRC0_CLK	Counter 1 Clock Source	PLL_CORE_HSDIV0_CLKOUT1	0x0
DCC_CLKSRC1_CLK	Counter 1 Clock Source	MSS_CR5F_CLK	0x1
DCC_CLKSRC2_CLK	Counter 1 Clock Source	XTALCLK	0x2
DCC_CLKSRC3_CLK	Counter 1 Clock Source	MSS_CPTS_CLK	0x3
DCC_CLKSRC4_CLK	Counter 1 Clock Source	MSS_RTIB_CLK	0x4
DCC_CLKSRC5_CLK	Counter 1 Clock Source	MSS_SPIB_CLK	0x5

Table 11-1626. MSS_DCCC Clocking

Clock Signal	Description	Source	REG Value for Selection
DCC_INPUT00_CLK	Primary Oscillator Clock	XTALCLK	0x0
DCC_INPUT01_CLK	Primary Oscillator Clock	RCCLK10	0x1
DCC_INPUT02_CLK	Primary Oscillator Clock	SYS_CLK	0x2
DCC_CLKSRC0_CLK	Counter 1 Clock Source	PLL_DSS_HSDIV0_CLKOUT2	0x0
DCC_CLKSRC3_CLK	Counter 1 Clock Source	GPIO[0]	0x3
DCC_CLKSRC4_CLK	Counter 1 Clock Source	GPIO[1]	0x4
DCC_CLKSRC5_CLK	Counter 1 Clock Source	GPIO[2]	0x5
DCC_CLKSRC6_CLK	Counter 1 Clock Source	MSS_WDT_CLK	0x6
DCC_CLKSRC7_CLK	Counter 1 Clock Source	XTALCLK	0x7

Table 11-1627. MSS_DCCD Clocking

Clock Signal	Description	Source	REG Value for Selection
DCC_INPUT00_CLK	Primary Oscillator Clock	XTALCLK	0x0
DCC_INPUT01_CLK	Primary Oscillator Clock	RCCLK10	0x1
DCC_INPUT02_CLK	Primary Oscillator Clock	SYS_CLK	0x2
DCC_CLKSRC0_CLK	Counter 1 Clock Source	PLL_PER_HSDIV1_CLKOUT1	0x0
DCC_CLKSRC1_CLK	Counter 1 Clock Source	MSS_WDT_CLK	0x1
DCC_CLKSRC2_CLK	Counter 1 Clock Source	MSS_MCANA_CLK	0x2
DCC_CLKSRC3_CLK	Counter 1 Clock Source	GPIO[8]	0x3
DCC_CLKSRC4_CLK	Counter 1 Clock Source	GPIO[9]	0x4
DCC_CLKSRC5_CLK	Counter 1 Clock Source	GPIO[10]	0x5
DCC_CLKSRC6_CLK	Counter 1 Clock Source	GPIO[0]	0x6
DCC_CLKSRC7_CLK	Counter 1 Clock Source	GPIO[1]	0x7

11.8.3.4 DSS DCC Integration

2-DCC modules have been instantiated in the SOC as part of DSS. Clocks to the module are mentioned in the following sections.

11.8.3.4.1 Input Source Clocks

Table 11-1628. DSS_DCCA Clocking

Clock Signal	Description	Source	REG Value for Selection
DCC_INPUT00_CLK	Primary Oscillator Clock	XTALCLK	0x0
DCC_INPUT01_CLK	Primary Oscillator Clock	RCCLK	0x1
DCC_INPUT02_CLK	Primary Oscillator Clock	SYS_CLK	0x1
DCC_CLKSRC0_CLK	Counter 1 Clock Source	DSS_SCIA_CLK	0x0
DCC_CLKSRC1_CLK	Counter 1 Clock Source	DSS_SYS_CLK	0x1
DCC_CLKSRC2_CLK	Counter 1 Clock Source	DSS_HWA_CLK	0x2

Copyright © 2025 Texas Instruments Incorporated

Table 11-1628. DSS_DCCA Clocking (continued)

Clock Signal	Description	Source	REG Value for Selection
DCC_CLKSRC3_CLK	Counter 1 Clock Source	DSS_RTIA_CLK	0x3
DCC_CLKSRC4_CLK	Counter 1 Clock Source	DSS_WDT_CLK	0x4
DCC_CLKSRC5_CLK	Counter 1 Clock Source	DSS_SYS_CLK	0x5
DCC_CLKSRC6_CLK	Counter 1 Clock Source	DSS_DSP_CLK	0x6
DCC_CLKSRC7_CLK	Counter 1 Clock Source	PLL_DSP_HSDIV0_CLKOUT1	0x7

Table 11-1629. DSS_DCCB Clocking

Clock Signal	Description	Source	REG Value for Selection
DCC_INPUT00_CLK	Primary Oscillator Clock	XTALCLK	0x0
DCC_INPUT01_CLK	Primary Oscillator Clock	RCCLK	0x1
DCC_INPUT02_CLK	Primary Oscillator Clock	RSS_CLK	0x2
DCC_CLKSRC2_CLK	Counter 1 Clock Source	DSS_HWA_CLK	0x2
DCC_CLKSRC3_CLK	Counter 1 Clock Source	CSI2_RX_CLK	0x3
DCC_CLKSRC4_CLK	Counter 1 Clock Source	DSS_WDT_CLK	0x4
DCC_CLKSRC5_CLK	Counter 1 Clock Source	RSS_CLK	0x5
DSS_CLKSRC7_CLK	Counter 1 Clock Source	PLL_PER_HSDIV0_CLKOUT1	0x7

Refer to the interrupt and DMA tables for mapping of the IPs interrupts and DMA requests.

11.8.3.5 Clock Source Selection for Counter0 and Counter1

Refer the device datasheet to identify the available options for selecting the clock sources for both counters of the DCC module. Some microcontrollers may include multiple instances of the DCC module. This will also be identified in the device datasheet.

The selection of the clock sources for counter0 and coutner1 is done by a combination of the KEY, CNT0 CLKSRC and CNT1 CLKSRC control fields of the CNT0CLKSRC and CNT1CLKSRC registers.

Copyright © 2025 Texas Instruments Incorporated

11.8.3.6 DCC Registers

Table 11-1630 lists the DCC memory-mapped registers. All register offset addresses not listed in Table 11-1630 should be considered as reserved locations and the register contents should not be modified.

Table 11-1630. DCC Registers

Offset	Acronym	Register Name	Section
0h	DCCGCTRL	DCCGCTRL	Section 12.8.3.6.1
4h	DCCREV	DCCREV	Section 12.8.3.6.2
8h	DCCCNTSEED0	DCCCNTSEED0	Section 12.8.3.6.3
Ch	DCCVALIDSEED0	DCCVALIDSEED0	Section 12.8.3.6.4
10h	DCCCNTSEED1	DCCCNTSEED1	Section 12.8.3.6.5
14h	DCCSTAT	DCCSTAT	Section 12.8.3.6.6
18h	DCCCNT0	DCCCNT0	Section 12.8.3.6.7
1Ch	DCCVALID0	DCCVALID0	Section 12.8.3.6.8
20h	DCCCNT1	DCCCNT1	Section 12.8.3.6.9
24h	DCCCLKSSRC1	DCCCLKSSRC1	Section 12.8.3.6.10
28h	DCCCLKSSRC0	DCCCLKSSRC0	Section 12.8.3.6.11

Complex bit access types are encoded to fit into small table cells. Table 11-1631 shows the codes that are used for access types in this section.

Table 11-1631. DCC Access Type Codes

Access Type	Code	Description
Read Type		
R	R	Read
Write Type		
W	W	Write
Reset or Default Value		
-n		Value after reset or the default value
Register Array Variables		
i,j,k,l,m,n		When these variables are used in a register name, an offset, or an address, they refer to the value of a register array where the register is part of a group of repeating registers. The register groups form a hierarchical structure and the array is represented with a formula.
y		When this variable is used in a register name, an offset, or an address it refers to the value of a register array.

Copyright © 2025 Texas Instruments Incorporated

11.8.3.6.1 DCCGCTRL Register (Offset = 0h) [reset = 5555h]

DCCGCTRL is shown in Figure 11-424 and described in Table 11-1632.

Return to Summary Table.

Starts / stops the counters clears the error signal

Figure 11-424. DCCGCTRL Register

31	30	29	28	27	26	25	24	23	22	21	20	19	18	17	16
NU															
R-0h															
15	14	13	12	11	10	9	8	7	6	5	4	3	2	1	0
DONENA				SINGLESHOT				ERRENA				DCCENA			
R/W-5h				R/W-5h				R/W-5h				R/W-5h			

Table 11-1632. DCCGCTRL Register Field Descriptions

Bit	Field	Type	Reset	Description
31-16	NU	R	0h	Reserved
15-12	DONENA	R/W	5h	The DONEENA bit enables/disables the done signal. 0101 = disabled & 1010 = enabled
11-8	SINGLESHOT	R/W	5h	Single/Continuous checking mode. 0101 = Continuous & 1010 = Single
7-4	ERRENA	R/W	5h	The ERRENA bit enables/disables the error signal. 0101 = disabled & 1010 = enabled
3-0	DCCENA	R/W	5h	The DCCENA bit starts and stops the operation of the dcc 0101 = disabled & 1010 = enabled

Copyright © 2025 Texas Instruments Incorporated

11.8.3.6.2 DCCREV Register (Offset = 4h) [reset = 40000204h]

DCCREV is shown in Figure 11-425 and described in Table 11-1633.

Return to Summary Table.

Module version

Figure 11-425. DCCREV Register

31	30	29	28	27	26	25	24
NU2		SCHEME		NU1		FUNC	
R-0h		R-4h		R-0h		R-0h	
23	22	21	20	19	18	17	16
FUNC							
R-0h							
15	14	13	12	11	10	9	8
FUNC			RTL				MAJOR
R-0h			R-1h				R-0h
7	6	5	4	3	2	1	0
MAJOR		CUSTOM	MINOR				
R-0h		R-0h	R-4h				

Table 11-1633. DCCREV Register Field Descriptions

Bit	Field	Type	Reset	Description
31	NU2	R	0h	Reserved
30-28	SCHEME	R	4h	SCHEME. - (RO)
27-26	NU1	R	0h	Reserved
25-14	FUNC	R	0h	Functional release number - (RO)
13-9	RTL	R	1h	Design Release Number - (RO)
8-6	MAJOR	R	0h	Major Revision Number - (RO)
5	CUSTOM	R	0h	Indicates a special version of the module. May not be supported by standard software - (RO)
4-0	MINOR	R	4h	Minor revision number. - (RO)

Copyright © 2025 Texas Instruments Incorporated

11.8.3.6.3 DCCCNTSEED0 Register (Offset = 8h) [reset = 0h]

DCCCNTSEED0 is shown in Figure 11-426 and described in Table 11-1634.

Return to Summary Table.

Seed value for the counter attached to clock source 0

Figure 11-426. DCCCNTSEED0 Register

31	30	29	28	27	26	25	24	23	22	21	20	19	18	17	16	15	14	13	12	11	10	9	8	7	6	5	4	3	2	1	0
NU3												COUNTSEED0																			
R-0h												R/W-0h																			

Table 11-1634. DCCCNTSEED0 Register Field Descriptions

Bit	Field	Type	Reset	Description
31-20	NU3	R	0h	Reserved
19-0	COUNTSEED0	R/W	0h	The seed value for Counter 0. The seed value that gets loaded into counter 0 (clock source 0)

Copyright © 2025 Texas Instruments Incorporated

11.8.3.6.4 DCCVALIDSEED0 Register (Offset = Ch) [reset = 0h]

DCCVALIDSEED0 is shown in Figure 11-427 and described in Table 11-1635.

Return to Summary Table.

Seed value for the timeout counter attached to clock source 0

Figure 11-427. DCCVALIDSEED0 Register

31	30	29	28	27	26	25	24	23	22	21	20	19	18	17	16	15	14	13	12	11	10	9	8	7	6	5	4	3	2	1	0
NU4																VALIDSEED0															
R-0h																R/W-0h															

Table 11-1635. DCCVALIDSEED0 Register Field Descriptions

Bit	Field	Type	Reset	Description
31-16	NU4	R	0h	Reserved
15-0	VALIDSEED0	R/W	0h	The seed value for Valid Duration Counter 0.The seed value that gets loaded into the valid duration counter for clock source 0

Copyright © 2025 Texas Instruments Incorporated

11.8.3.6.5 DCCCNTSEED1 Register (Offset = 10h) [reset = 0h]

DCCCNTSEED1 is shown in Figure 11-428 and described in Table 11-1636.

Return to Summary Table.

Seed value for the counter attached to clock source 1

Figure 11-428. DCCCNTSEED1 Register

31	30	29	28	27	26	25	24	23	22	21	20	19	18	17	16	15	14	13	12	11	10	9	8	7	6	5	4	3	2	1	0
NU5												COUNTSEED1																			
R-0h												R/W-0h																			

Table 11-1636. DCCCNTSEED1 Register Field Descriptions

Bit	Field	Type	Reset	Description
31-20	NU5	R	0h	Reserved
19-0	COUNTSEED1	R/W	0h	The seed value for Counter 1. The seed value that gets loaded into counter 1 (clock source 1

Copyright © 2025 Texas Instruments Incorporated

11.8.3.6.6 DCCSTAT Register (Offset = 14h) [reset = 0h]

DCCSTAT is shown in Figure 11-429 and described in Table 11-1637.

Return to Summary Table.

Contains the error & done flag bit

Figure 11-429. DCCSTAT Register

31	30	29	28	27	26	25	24
NU6							
R-0h							
23	22	21	20	19	18	17	16
NU6							
R-0h							
15	14	13	12	11	10	9	8
NU6							
R-0h							
7	6	5	4	3	2	1	0
NU6						DONE	ERR
R-0h						R/W-0h	R/W-0h

Table 11-1637. DCCSTAT Register Field Descriptions

Bit	Field	Type	Reset	Description
31-2	NU6	R	0h	Reserved
1	DONE	R/W	0h	Indicates whether or not an done has occured. Writing a 1 to this bit clears the flag.
0	ERR	R/W	0h	Indicates whether or not an error has occured. Writing a 1 to this bit clears the flag.

Copyright © 2025 Texas Instruments Incorporated

11.8.3.6.7 DCCCNT0 Register (Offset = 18h) [reset = 0h]

DCCCNT0 is shown in Figure 11-430 and described in Table 11-1638.

Return to Summary Table.

Value of the counter attached to clock source 0

Figure 11-430. DCCCNT0 Register

31	30	29	28	27	26	25	24	23	22	21	20	19	18	17	16	15	14	13	12	11	10	9	8	7	6	5	4	3	2	1	0
NU7												COUNT0																			
R-0h												R-0h																			

Table 11-1638. DCCCNT0 Register Field Descriptions

Bit	Field	Type	Reset	Description
31-20	NU7	R	0h	Reserved
19-0	COUNT0	R	0h	This field contains the current value of counter 0. - (RO)

Copyright © 2025 Texas Instruments Incorporated

11.8.3.6.8 DCCVALID0 Register (Offset = 1Ch) [reset = 0h]

DCCVALID0 is shown in Figure 11-431 and described in Table 11-1639.

Return to Summary Table.

Value of the valid counter attached to clock source 0

Figure 11-431. DCCVALID0 Register

31	30	29	28	27	26	25	24	23	22	21	20	19	18	17	16	15	14	13	12	11	10	9	8	7	6	5	4	3	2	1	0
NU8																VALID0															
R-0h																R-0h															

Table 11-1639. DCCVALID0 Register Field Descriptions

Bit	Field	Type	Reset	Description
31-16	NU8	R	0h	Reserved
15-0	VALID0	R	0h	This field contains the current value of valid counter 0. - (RO)

Copyright © 2025 Texas Instruments Incorporated

11.8.3.6.9 DCCCNT1 Register (Offset = 20h) [reset = 0h]

DCCCNT1 is shown in Figure 11-432 and described in Table 11-1640.

Return to Summary Table.

Value of the counter attached to clock source 1

Figure 11-432. DCCCNT1 Register

31	30	29	28	27	26	25	24	23	22	21	20	19	18	17	16	15	14	13	12	11	10	9	8	7	6	5	4	3	2	1	0
NU9												COUNT1																			
R-0h												R-0h																			

Table 11-1640. DCCCNT1 Register Field Descriptions

Bit	Field	Type	Reset	Description
31-20	NU9	R	0h	Reserved
19-0	COUNT1	R	0h	This field contains the current value of counter 1. - (RO)

Copyright © 2025 Texas Instruments Incorporated

11.8.3.6.10 DCCCLKSSRC1 Register (Offset = 24h) [reset = 5000h]

DCCCLKSSRC1 is shown in Figure 11-433 and described in Table 11-1641.

Return to Summary Table.

Clock source1 selection control

Figure 11-433. DCCCLKSSRC1 Register

31	30	29	28	27	26	25	24	23	22	21	20	19	18	17	16
NU11															
R-0h															
15	14	13	12	11	10	9	8	7	6	5	4	3	2	1	0
KEY_B4				NU10								CLK_SRC1			
R/W-5h				R-0h								R/W-0h			

Table 11-1641. DCCCLKSSRC1 Register Field Descriptions

Bit	Field	Type	Reset	Description
31-16	NU11	R	0h	Reserved
15-12	KEY_B4	R/W	5h	Key Programing (1010 is the KEY Value)
11-4	NU10	R	0h	Reserved
3-0	CLK_SRC1	R/W	0h	Clock source selection for Source 0 DCC-A Clock source-0 selection Program value and its respective clock selected 0x0 - REF_CLK 0x1 - CPU_CLK 0x2 - RC_CLK 0x3 - RC_CLK 0x4 - RC_CLK 0x5 - RC_CLK 0x6 - RC_CLK 0x7 - RC_CLK DCC-B Clock source-0 selection Program value and its respective clock selected 0x0 - VCLK 0x1 - DSS_CLK 0x2 - BSS_CLK 0x3 - QSPI_CLK 0x4 - FDCAN_CLK 0x5 - RED_CLK 0x6 - CPU_CLK 0x7 - RC_CLK

Copyright © 2025 Texas Instruments Incorporated

11.8.3.6.11 DCCCLKSSRC0 Register (Offset = 28h) [reset = 5h]

DCCCLKSSRC0 is shown in Figure 11-434 and described in Table 11-1642.

Return to Summary Table.

Clock source0 selection control

Figure 11-434. DCCCLKSSRC0 Register

31	30	29	28	27	26	25	24	23	22	21	20	19	18	17	16
NU12															
R-0h															
15	14	13	12	11	10	9	8	7	6	5	4	3	2	1	0
NU12												CLK_SRC0			
R-0h												R/W-5h			

Table 11-1642. DCCCLKSSRC0 Register Field Descriptions

Bit	Field	Type	Reset	Description
31-4	NU12	R	0h	Reserved
3-0	CLK_SRC0	R/W	5h	Clock source selection for Source 0 DCC-A Clock source-0 selection Program value and its respective clock selected 0 - REF_CLK A - PLL_600 5 - PLL_240 DCC-B Clock source-0 selection Program value and its respective clock selected 0 - PLL_600 A - VCLK 5 - CPU_CLK

11.8.4 ECC_AGGREGATOR

This section describes the common ECC aggregator functionality.

11.8.4.1 ECC Aggregator Overview

To increase functional safety and system reliability the memories (for example, FIFOs, queues, SRAMs and others) in many device modules and subsystems are protected by error correcting code (ECC). This is accomplished through an ECC aggregator and ECC wrapper. The ECC aggregator is connected to these memories (hereinafter ECC RAMs) and involved in the ECC process. Each memory is surrounded by an ECC wrapper which performs the ECC detection and correction. The wrapper communicates via serial interface with the aggregator which has memory mapped configuration interface

11.8.4.2 Integration Details

In TPR1x design, there are five ECC aggregators.

- MSS_ECC_AGG_R5A
- MSS_ECC_AGG_R5B
- MSS_ECC_AGG_MSS
- DSS_ECC_AGG
- HSM_ECC_AGGR (details will be available in HSM document)

This aggregator is used to fault inject all memory ecc_controllers and aggregate the errors to generate a single error to ESM.

11.8.4.3 ECC Aggregator Features

The ECC aggregator has the following features:

- Reduces memory software errors via single error correction (SEC) and double error detection (DED)
- Provides a mechanism to control and monitor the ECC protected memories in a module or subsystem
- SEC and DED over the system interconnect data bus and parity and redundancy for the system interconnect command and address buses
- Generates an interrupt for correctable error

Copyright © 2025 Texas Instruments Incorporated

- Generates an interrupt for non-correctable error
- Supports inject only mode for diagnostic purposes
- Supports software readable status for single and double-bit ECC errors and associated information such as row address where error has occurred and data bits that have been flipped
- An ECC endpoint can be ECC RAM component.
- Detects single bit error via parity checking on:
  1. Memory mapped configuration interface FIFO
  2. Serial interface FIFO
- Single bit error detection via parity checking results in a non-correctable error interrupt
- Supports timeout mechanism on transactions over the ECC serial interface. Timeout occurrence results in a non-correctable error interrupt.
- Certain control bits have redundancy and if a bit flips an interrupt is generated

11.8.4.4 ECC Aggregator Integration

This section describes ECC aggregator integration in the device, including information about clocks, resets, and hardware requests.

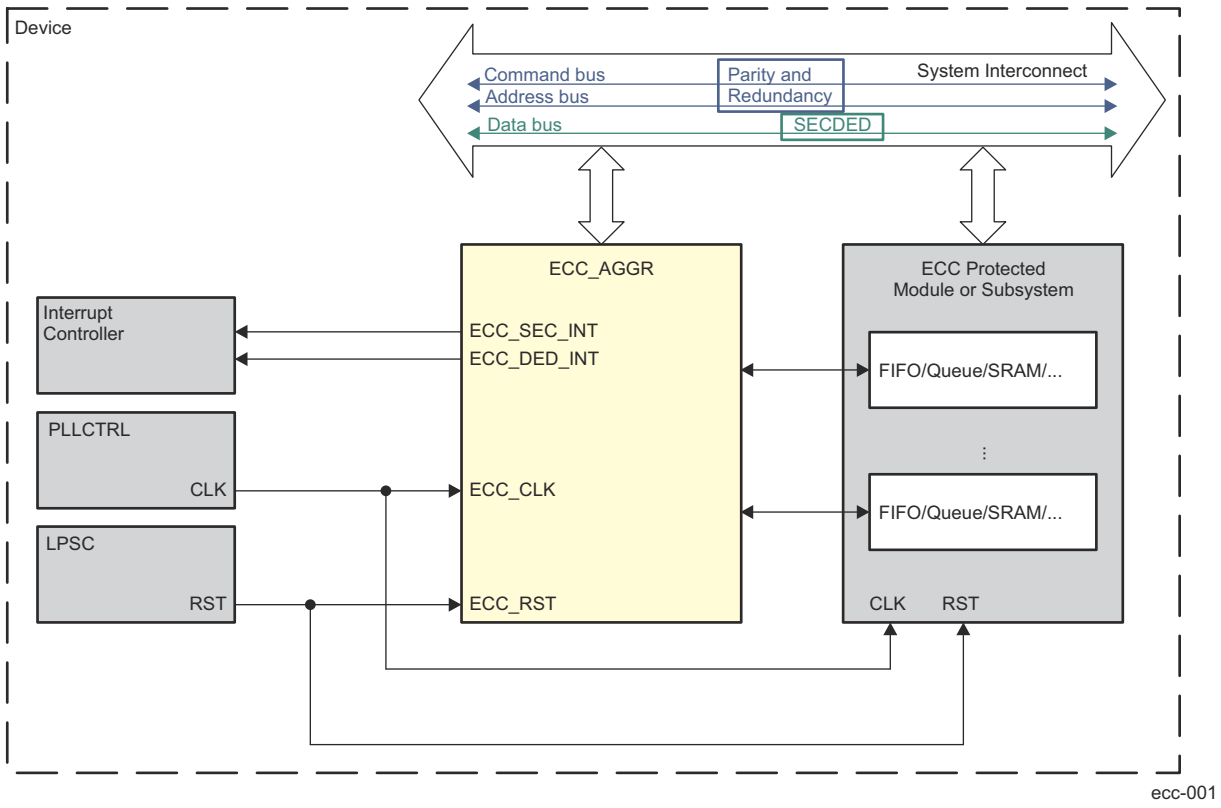

Figure 11-435. ECC Aggregator Integration

Table 11-1643. ECC Aggregator Clocks and Resets

Clock				
Module Instance	Module Clock Input	Source Clock Signal	Source	Description
ECC_AGGR	ECC_CLK	Same as corresponding module or subsystem	Same as corresponding module or subsystem	ECC aggregator clock
Resets				
Module Instance	Module Reset Input	Source Reset Signal	Source	Description
ECC_AGGR	ECC_RST	Same as corresponding module or subsystem	Same as corresponding module or subsystem	ECC aggregator reset

Copyright © 2025 Texas Instruments Incorporated

Table 11-1644. ECC Aggregator Hardware Requests

Interrupt Requests					
Module Instance	Module Interrupt Signal	Destination Interrupt Input	Description	Description	Type
ECC_AGGR	ECC_SEC_INT	See	See	Interrupt for correctable error(SEC)	Leve
	ECC_DED_INT	See	See	Interrupt for non-correctable error (DED, parity, redundancy, timeout)	LEVEL
DMA Events					
Module Instance	Module DMA Input	Destination DMA Event Input	Destination	Description	Type
ECC_AGGR	-	-	-	-	-

Note

For more information on the interrupts, see Section 11.8.4.9.

For more information on the interconnects, see .

For more information on the power, reset and clock management, see the corresponding sections in .

For more information on the device interrupt controllers, see *Interrupt Controllers*.

11.8.4.5 ECC Aggregator Function Description

This section describes the architecture and functional details of the ECC aggregator.

11.8.4.5.1 ECC Aggregator Block Diagram

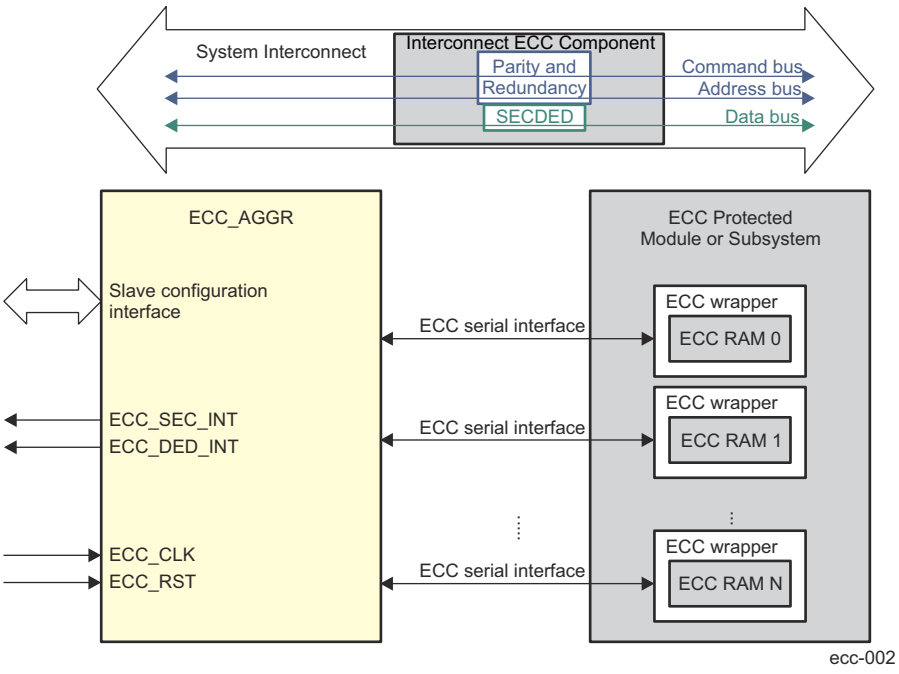

Figure 11-436. ECC Aggregator Block Diagram

The ECC aggregator is connected to one or more ECC endpoints each of which has assigned a unique ID used when the endpoint is accessed for status information or configuration. The ECC aggregator provides software

Copyright © 2025 Texas Instruments Incorporated

access to all ECC related registers through its memory mapped slave configuration interface while the serial interface is used to communicate with the ECC endpoints. Upon detection of single or double-bit error the corresponding interrupt line is asserted.

11.8.4.6 ECC Aggregator Register Groups

The ECC aggregator has ECC control, status and interrupt registers for each ECC endpoint in a module or subsystem. These registers are memory mapped and occupy 1 KB address space although part of it may contain reserved locations. The registers are split in the following types:

- **Global registers**. They are common to all ECC endpoints associated with the ECC aggregator and include the ECC_VECTOR and ECC_REV registers. Each ECC endpoint has assigned a unique ID.

  When this ID is written to the ECC_VECTOR[10-0] ECC_VECTOR field the corresponding endpoint is selected either for control or for status reading.
- **ECC control and status registers**. These registers are specific to each ECC endpoint and reside in the range from address offset 0x10 to 0x28, if the endpoint is ECC RAM or from 0x10 to 0x24, if the endpoint is interconnect ECC component. They are memory mapped but are accessed through the ECC serial interface. They are also selected by the ECC endpoint ID written to the ECC_VECTOR[10-0] ECC_VECTOR field. Because of latency on the serial interface the ECC control and status registers are read by performing special sequence as described in Section 12.9.4.3.3. These registers have also different functionality for both types of endpoints - ECC RAM and interconnect ECC component.
- **Interrupt registers**. They include interrupt status, interrupt enable, interrupt disable, and EOI registers.

11.8.4.7 Read Access to the ECC Control and Status Registers

Read accesses to the ECC control and status registers for each ECC endpoint represent read operations over the ECC serial interface and are triggered by performing the following sequence:

1. Software writes the following in the ECC_VECTOR register:
   - The ECC endpoint ID in the ECC_VECTOR[10-0] ECC_VECTOR field to select particular ECC endpoint.
   - The register read address in the ECC_VECTOR[23-16] RD_SVBUS_ADDRESS field to select which register has to be read through the ECC serial interface.
   - A value of 0x1 in the ECC_VECTOR[15] RD_SVBUS bit to trigger read operation through the ECC serial interface.
2. Software polls the ECC_VECTOR[24] RD_SVBUS_DONE bit to check if it is 0x1. This indicates that the read operation on the ECC serial interface has completed.
3. Software reads the data from the register previously selected by the ECC_VECTOR[23-16]RD_SVBUS_ADDRESS field.

11.8.4.8 Serial Write Operation

Write operations over the ECC serial interface are performed as follows:

1. Software specifies the ECC endpoint ID in the ECC_VECTOR[10-0] ECC_VECTOR field. The ECC_VECTOR[23-16] RD_SVBUS_ADDRESS field is a don't care but the ECC_VECTOR[15] RD_SVBUS bit must be set to 0x0.
2. Software performs regular write operation to the desired address. If the ECC endpoint ID has already been specified, step 1 can be skipped. Unlike serial read operations it is not necessary to always specify the endpoint ID before performing serial write operation.

The following is an example for serial write operation:

1. Write 0x0000 0008 to the ECC_VECTOR register.
2. Write 0x0000 000F to the ECC_CTRL register. This sends write request with data 0x0000 000F to the ECC_CTRL register associated with ECC RAM with ID = 8.

11.8.4.9 Interrupts

The ECC aggregator generates the following interrupts:

Copyright © 2025 Texas Instruments Incorporated

- Correctable interrupt (ECC_SEC_INT) where hardware can correct the error but notifies the system in case of SEC.
- Non-correctable interrupt (ECC_DED_INT) where hardware cannot correct the error in cases of DED, parity check, redundancy check or timeout occurrence.

The following is the sequence for servicing interrupts:

- Software enables the interrupts for an ECC endpoint by writing 0x1 to the corresponding bit of the following interrupt enable registers:
  - ECC_SEC_ENABLE_SET_REG0 for the correctable interrupt
  - ECC_DED_ENABLE_SET_REG0 for the noncorrectable interrupt
- On receiving an interrupt, software checks which ECC endpoint has caused the error by reading the following interrupt status registers:
  - ECC_SEC_STATUS_REG0 for the correctable interrupt ECC_DED_STATUS_REG0 for the non-correctable interrupt
- Software performs serial read operations as described in Section 12.9.4.3.3 to read the following status registers that contain details about the error:
  - If the endpoint is ECC RAM:
    - ECC_ERR_STAT1
    - ECC_ERR_STAT2
    - ECC_ERR_STAT3
- If the endpoint is interconnect ECC component:
  - ECC_CBASS_ERR_STAT1
  - ECC_CBASS_ERR_STAT2
- After the interrupt has been serviced, depending on the error type, software should clear the corresponding status bits in the ECC_ERR_STAT1 and ECC_ERR_STAT3 registers or in the ECC_CBASS_ERR_STAT1 register. Software has to poll these registers to guarantee that status bits are cleared as there is no other indication for write completion over the ECC serial interface.

The value of the *_PEND_CLR fields in the ECC_CBASS_ERR_STAT1 register must be read and then written back to decrement the count of each field back to 0x0. A further error capture into the ECC_CBASS_ERR_STAT1 register does not occur unless all its fields are 0x0. The decrement value should not be larger than the read value. If a field in the ECC_CBASS_ERR_STAT1 register should not be modified, write a value of 0x0 to that field.

- Software writes 0x1 to the corresponding end of interrupt register to clear the interrupt:
  - ECC_SEC_EOI_REG for the correctable interrupt
  - ECC_DED_EOI_REG for the non-correctable interrupt

11.8.4.10 Inject Only Mode

There are modules that already perform the ECC generation and checking as part of their data path. In this case, the ECC wrapper may be configured in inject only mode, if needed. In this mode the ECC wrapper does not perform ECC detection and correction. The inject only mode allows users to inject single or double-bit errors so that the module logic can be tested for diagnostic purposes.

Note

There is no software control to enable inject only mode. It is configured via tie-off value. Inject only and ECC modes are mutually exclusive.

The interconnect ECC component also supports error injection mode. There is error injection logic for testing of the error checking logic (checkers). The injection logic can be configured to inject either single or double bit error and what data pattern to be used for injection (ECC_CBASS_CTRL[11-8] ECC_PATTERN). The ECC_CBASS_ERR_CTRL1 and ECC_CBASS_ERR_CTRL2 registers should be written first to setup the injection. Then, either the ECC_CBASS_CTRL[3] FORCE_SE or the ECC_CBASS_CTRL[4] FORCE_DE bit must be set to 0x1 to start the injection. Both bits must not be set at the same time. If the injection should

Copyright © 2025 Texas Instruments Incorporated

continue in incrementing mode, then the ECC_CBASS_CTRL[5] FORCE_N_BIT bit should be set to 0x1. Once the FORCE_N_BIT is set, then each successive injection can simply write the ECC_CBASS_CTRL register to set the FORCE_SE or FORCE_DE again. Reading 0x0 from either the FORCE_SE or the FORCE_DE bit indicates that the injection has completed, as these bits automatically clear when the checker indicates that it has performed the injection. The time for an injection to complete is not guaranteed, so some delay is needed between successive injections.

11.8.4.11 Errors

Each aggregator generates two errors which drive the ESM.

- <modulename>_SERR module names are mentioned in the below section
- <modulename>_SERR module names are mentioned in the below section

Group1 and Group2 mappings are found the ESM interrupt sections.

11.8.4.12 Aggregator Mapping to Memory Instances

Table 11-1645. MSS_ECC_AGG_R5A Instance

RAM ID	Module Name	Protected RAM
RAM_0	MSS_CR5A_CACHE	MSS_CR5A_ITAG_BANK0
RAM_1		MSS_CR5A_ITAG_BANK1
RAM_2		MSS_CR5A_ITAG_BANK2
RAM_3		MSS_CR5A_ITAG_BANK3
RAM_4		MSS_CR5A_IDATA_BANK0
RAM_5		MSS_CR5A_IDATA_BANK1
RAM_6		MSS_CR5A_IDATA_BANK2
RAM_7		MSS_CR5A_IDATA_BANK3
RAM_8		MSS_CR5A_DTAG_BANK0
RAM_9		MSS_CR5A_DTAG_BANK1
RAM_10		MSS_CR5A_DTAG_BANK2
RAM_11		MSS_CR5A_DTAG_BANK3
RAM_12		MSS_CR5A_DDIRTY
RAM_13		MSS_CR5A_DDATA_BANK0
RAM_14		MSS_CR5A_DDATA_BANK1
RAM_15		MSS_CR5A_DDATA_BANK2
RAM_16		MSS_CR5A_DDATA_BANK3
RAM_17		MSS_CR5A_DDATA_BANK4
RAM_18		MSS_CR5A_DDATA_BANK5
RAM_19		MSS_CR5A_DDATA_BANK6
RAM_20		MSS_CR5A_DDATA_BANK7
RAM_21	MSS_CR5A_TCM	MSS_CR5A_ATCM_BANK0
RAM_22		MSS_CR5A_ATCM_BANK1
RAM_23		MSS_CR5A_B0TCM_BANK0
RAM_24		MSS_CR5A_B0TCM_BANK1
RAM_25		MSS_CR5A_B1TCM_BANK0
RAM_26		MSS_CR5A_B1TCM_BANK1
RAM_27	MSS_CR5A_VIM	MSS_CR5A_VIM

Table 11-1646. MSS_ECC_AGG_R5B Intance

RAM ID	Module Name	Protected RAM

Copyright © 2025 Texas Instruments Incorporated

Table 11-1646. MSS_ECC_AGG_R5B Intance (continued)

RAM_0	MSS_CR5B_CACHE	MSS_CR5B_ITAG_BANK0
RAM_1		MSS_CR5B_ITAG_BANK1
RAM_2		MSS_CR5B_ITAG_BANK2
RAM_3		MSS_CR5B_ITAG_BANK3
RAM_4		MSS_CR5B_IDATA_BANK0
RAM_5		MSS_CR5B_IDATA_BANK1
RAM_6		MSS_CR5B_IDATA_BANK2
RAM_7		MSS_CR5B_IDATA_BANK3
RAM_8		MSS_CR5B_DTAG_BANK0
RAM_9		MSS_CR5B_DTAG_BANK1
RAM_10		MSS_CR5B_DTAG_BANK2
RAM_11		MSS_CR5B_DTAG_BANK3
RAM_12		MSS_CR5B_DDIRTY
RAM_13		MSS_CR5B_IDATA_BANK0
RAM_14		MSS_CR5B_IDATA_BANK1
RAM_15		MSS_CR5B_IDATA_BANK2
RAM_16		MSS_CR5B_IDATA_BANK3
RAM_17		MSS_CR5B_IDATA_BANK4
RAM_18		MSS_CR5B_IDATA_BANK5
RAM_19		MSS_CR5B_IDATA_BANK6
RAM_20		MSS_CR5B_IDATA_BANK7
RAM_21	MSS_CR5B_TCM	MSS_CR5B_ATCM_BANK0
RAM_22		MSS_CR5B_ATCM_BANK1
RAM_23		MSS_CR5B_B0TCM_BANK0
RAM_24		MSS_CR5B_B0TCM_BANK1
RAM_25		MSS_CR5B_B1TCM_BANK0
RAM_26		MSS_CR5B_B1TCM_BANK1
RAM_27	MSS_CR5B_VIM	MSS_CR5B_VIM

Table 11-1647. MSS_ECC_AGG_MSS Instance

RAM ID	Module Name	Protected RAM
RAM_0	MSS_L2	MSS_L2RAM A
RAM_1		MSS_L2RAM B
RAM_2	MSS_MBOX	MSS_MBOX
RAM_3	MSS_RETRAM	MSS_RETRAM
RAM_4	MSS_GPADC	MSS_GPADC_DATA_RAM
RAM_5	MSS_TPTC_A0	MSS_TPTC_A0
RAM_6	MSS_TPTC_A1	MSS_TPTC_A1
RAM_7	MSS_TPTC_B0	MSS_TPTC_B0

Table 11-1648. DSS_ECC_AGG Instance

RAM ID	Module Name	Protected RAM
RAM_0	DSS_L3	DSS_L3RAM A
RAM_1		DSS_L3RAM B
RAM_2		DSS_L3RAM C
RAM_3		DSS_L3RAM D
RAM_4	DSS_MAILBOX	DSS MAILBOX

Copyright © 2025 Texas Instruments Incorporated

Table 11-1648. DSS_ECC_AGG Instance (continued)

RAM_5	DSS_CM4_RAM	DSS CM4 RAM B0
RAM_6		DSS CM4 RAM B1
RAM_7		DSS CM4 RAM B2
RAM_8	DSS_CM4_MBOX	DSS CM4 MAILBOX
RAM_9	DSS_TPTC_A0	DSS TPTC A0 FIFO
RAM_10	DSS_TPTC_A1	DSS TPTC A1 FIFO
RAM_11	DSS_TPTC_B0	DSS TPTC B0 FIFO
RAM_12	DSS_TPTC_B1	DSS TPTC B1 FIFO
RAM_13	DSS_TPTC_C0	DSS TPTC C0 FIFO
RAM_14	DSS_TPTC_C1	DSS TPTC C1 FIFO
RAM_15	DSS_TPTC_C2	DSS TPTC C2 FIFO
RAM_16	DSS_TPTC_C3	DSS TPTC C3 FIFO
RAM_17	DSS_TPTC_C4	DSS TPTC C4 FIFO
RAM_18	DSS_TPTC_C5	DSS TPTC C5 FIFO
RAM_19	RCSS_TPTC_A0	RCSS TPTC A0 FIFO
RAM_20	RCSS_TPTC_A1	RCSS TPTC A1 FIFO
RAM_21	RESERVED	RESERVED
RAM_22	DSS_HWA	DSS HWA PARAM RAM

11.8.5 ECC Registers

Copyright © 2025 Texas Instruments Incorporated

11.8.5.1 DSS_ECC_AGG Registers

Table 11-1649 lists the DSS_ECC_AGG registers. All register offset addresses not listed in Table 11-1649 should be considered as reserved locations and the register contents should not be modified.

Table 11-1649. DSS_ECC_AGG Registers

Offset	Acronym	Register Name	Section
0h	rev	Aggregator Revision Register	Section 12.8.5.1.1
8h	vector	ECC Vector Register	Section 12.8.5.1.2
Ch	stat	Misc Status	Section 12.8.5.1.3
10h	wrap_rev	ECC Wrapper Revision Register	Section 12.8.5.1.4
14h	ctrl	ECC Control	Section 12.8.5.1.5
18h	err_ctrl1	ECC Error Control1 Register	Section 12.8.5.1.6
1Ch	err_ctrl2	ECC Error Control2 Register	Section 12.8.5.1.7
20h	err_stat1	ECC Error Status1 Register	Section 12.8.5.1.8
24h	err_stat2	ECC Error Status2 Register	Section 12.8.5.1.9
28h	err_stat3	ECC Error Status3 Register	Section 12.8.5.1.10
3Ch	sec_eoi_reg	EOI Register	Section 12.8.5.1.11
40h	sec_status_reg0	Interrupt Status Register 0	Section 12.8.5.1.12
80h	sec_enable_set_reg0	Interrupt Enable Set Register 0	Section 12.8.5.1.13
C0h	sec_enable_clr_reg0	Interrupt Enable Clear Register 0	Section 12.8.5.1.14
13Ch	ded_eoi_reg	EOI Register	Section 12.8.5.1.15
140h	ded_status_reg0	Interrupt Status Register 0	Section 12.8.5.1.16
180h	ded_enable_set_reg0	Interrupt Enable Set Register 0	Section 12.8.5.1.17
1C0h	ded_enable_clr_reg0	Interrupt Enable Clear Register 0	Section 12.8.5.1.18
200h	aggr_enable_set	AGGR interrupt enable set Register	Section 12.8.5.1.19
204h	aggr_enable_clr	AGGR interrupt enable clear Register	Section 12.8.5.1.20
208h	aggr_status_set	AGGR interrupt status set Register	Section 12.8.5.1.21
20Ch	aggr_status_clr	AGGR interrupt status clear Register	Section 12.8.5.1.22

Copyright © 2025 Texas Instruments Incorporated

11.8.5.1.1 rev Register (Offset = 0h) [reset = 66A0C200h]

rev is shown in Figure 11-437 and described in Table 11-1650.

Return to the Table 11-1649.

Revision parameters

Figure 11-437. rev Register

31	30	29	28	27	26	25	24	23	22	21	20	19	18	17	16
scheme		bu		module_id											
R-1h		R-2h		R-6A0h											
15	14	13	12	11	10	9	8	7	6	5	4	3	2	1	0
revrtl					revmaj			custom		revmin					
R-18h					R-2h			R-0h		R-0h					

Table 11-1650. rev Register Field Descriptions

Bit	Field	Type	Reset	Description
31-30	scheme	R	1h	Scheme
29-28	bu	R	2h	bu
27-16	module_id	R	6A0h	Module ID
15-11	revrtl	R	18h	RTL version
10-8	revmaj	R	2h	Major version
7-6	custom	R	0h	Custom version
5-0	revmin	R	0h	Minor version

Copyright © 2025 Texas Instruments Incorporated

11.8.5.1.2 vector Register (Offset = 8h) [reset = X]

vector is shown in Figure 11-438 and described in Table 11-1651.

Return to the Table 11-1649.

ECC Vector Register

Figure 11-438. vector Register

31	30	29	28	27	26	25	24
RESERVED							rd_svbus_done
R/W-X							R-0h
23	22	21	20	19	18	17	16
rd_svbus_address							
R/W-0h							
15	14	13	12	11	10	9	8
rd_svbus	RESERVED				ecc_vector		
R/W1S-0h	R/W-X				R/W-0h		
7	6	5	4	3	2	1	0
ecc_vector							
R/W-0h							

Table 11-1651. vector Register Field Descriptions

Bit	Field	Type	Reset	Description
31-25	RESERVED	R/W	X	
24	rd_svbus_done	R	0h	Status to indicate if read on serial VBUS is complete
23-16	rd_svbus_address	R/W	0h	Read address
15	rd_svbus	R/W1S	0h	Write 1 to trigger a read on the serial VBUS
14-11	RESERVED	R/W	X	
10-0	ecc_vector	R/W	0h	Value written to select the corresponding ECC RAM for control or status

Copyright © 2025 Texas Instruments Incorporated

11.8.5.1.3 stat Register (Offset = Ch) [reset = X]

stat is shown in Figure 11-439 and described in Table 11-1652.

Return to the Table 11-1649.

Misc Status

Figure 11-439. stat Register

31	30	29	28	27	26	25	24	23	22	21	20	19	18	17	16	15	14	13	12	11	10	9	8	7	6	5	4	3	2	1	0
RESERVED																					num_rams										
R-X																					R-17h										

Table 11-1652. stat Register Field Descriptions

Bit	Field	Type	Reset	Description
31-11	RESERVED	R	X	
10-0	num_rams	R	17h	Indicates the number of RAMS serviced by the ECC aggregator

Copyright © 2025 Texas Instruments Incorporated

11.8.5.1.4 wrap_rev Register (Offset = 10h) [reset = 66A40202h]

wrap_rev is shown in Figure 11-440 and described in Table 11-1653.

Return to the Table 11-1649.

Revision parameters

Figure 11-440. wrap_rev Register

31	30	29	28	27	26	25	24	23	22	21	20	19	18	17	16
scheme		bu		module_id											
R-1h		R-2h		R-6A4h											
15	14	13	12	11	10	9	8	7	6	5	4	3	2	1	0
revrtl					revmaj			custom		revmin					
R-0h					R-2h			R-0h		R-2h					

Table 11-1653. wrap_rev Register Field Descriptions

Bit	Field	Type	Reset	Description
31-30	scheme	R	1h	Scheme
29-28	bu	R	2h	bu
27-16	module_id	R	6A4h	Module ID
15-11	revrtl	R	0h	RTL version
10-8	revmaj	R	2h	Major version
7-6	custom	R	0h	Custom version
5-0	revmin	R	2h	Minor version

Copyright © 2025 Texas Instruments Incorporated

11.8.5.1.5 ctrl Register (Offset = 14h) [reset = X]

ctrl is shown in Figure 11-441 and described in Table 11-1654.

Return to the Table 11-1649.

ECC Control Register

Figure 11-441. ctrl Register

31	30	29	28	27	26	25	24
RESERVED							
R/W-X							
23	22	21	20	19	18	17	16
RESERVED							
R/W-X							
15	14	13	12	11	10	9	8
RESERVED							check_svbus_timeout
R/W-X							R/W-1h
7	6	5	4	3	2	1	0
check_parity	error_once	force_n_row	force_ded	force_sec	enable_rmw	ecc_check	ecc_enable
R/W-1h	R/W-0h	R/W-0h	R/W-0h	R/W-0h	R/W-1h	R/W-1h	R/W-1h

Table 11-1654. ctrl Register Field Descriptions

Bit	Field	Type	Reset	Description
31-9	RESERVED	R/W	X	
8	check_svbus_timeout	R/W	1h	check for svbus timeout errors
7	check_parity	R/W	1h	check for parity errors
6	error_once	R/W	0h	Force Error only once
5	force_n_row	R/W	0h	Force Error on any RAM read
4	force_ded	R/W	0h	Force Double Bit Error
3	force_sec	R/W	0h	Force Single Bit Error
2	enable_rmw	R/W	1h	Enable rmw
1	ecc_check	R/W	1h	Enable ECC check
0	ecc_enable	R/W	1h	Enable ECC

Copyright © 2025 Texas Instruments Incorporated

11.8.5.1.6 err_ctrl1 Register (Offset = 18h) [reset = 0h]

err_ctrl1 is shown in Figure 11-442 and described in Table 11-1655.

Return to the Table 11-1649.

ECC Error Control1 Register

Figure 11-442. err_ctrl1 Register

31	30	29	28	27	26	25	24	23	22	21	20	19	18	17	16	15	14	13	12	11	10	9	8	7	6	5	4	3	2	1	0
ecc_row																															
R/W-0h																															

Table 11-1655. err_ctrl1 Register Field Descriptions

Bit	Field	Type	Reset	Description
31-0	ecc_row	R/W	0h	Row address where single or double-bit error needs to be applied. This is ignored if force_n_row is set

Copyright © 2025 Texas Instruments Incorporated

11.8.5.1.7 err_ctrl2 Register (Offset = 1Ch) [reset = 0h]

err_ctrl2 is shown in Figure 11-443 and described in Table 11-1656.

Return to the Table 11-1649.

ECC Error Control2 Register

Figure 11-443. err_ctrl2 Register

31	30	29	28	27	26	25	24	23	22	21	20	19	18	17	16	15	14	13	12	11	10	9	8	7	6	5	4	3	2	1	0
ecc_bit2																ecc_bit1															
R/W-0h																R/W-0h															

Table 11-1656. err_ctrl2 Register Field Descriptions

Bit	Field	Type	Reset	Description
31-16	ecc_bit2	R/W	0h	Data bit that needs to be flipped if double bit error needs to be forced
15-0	ecc_bit1	R/W	0h	Data bit that needs to be flipped when force_sec is set

Copyright © 2025 Texas Instruments Incorporated

11.8.5.1.8 err_stat1 Register (Offset = 20h) [reset = 0h]

err_stat1 is shown in Figure 11-444 and described in Table 11-1657.

Return to the Table 11-1649.

ECC Error Status1 Register

Figure 11-444. err_stat1 Register

31	30	29	28	27	26	25	24
ecc_bit1							
R-0h							
23	22	21	20	19	18	17	16
ecc_bit1							
R-0h							
15	14	13	12	11	10	9	8
clr_ctrl_reg_err	clr_parity_err		clr_ecc_other	clr_ecc_ded		clr_ecc_sec	
R/W1C-0h	R/Wdecr-0h		R/W1C-0h	R/Wdecr-0h		R/Wdecr-0h	
7	6	5	4	3	2	1	0
ctr_reg_err	parity_err		ecc_other	ecc_ded		ecc_sec	
R/W1S-0h	R/W1S-0h		R/W1S-0h	R/Wincr-0h		R/Wincr-0h	

Table 11-1657. err_stat1 Register Field Descriptions

Bit	Field	Type	Reset	Description
31-16	ecc_bit1	R	0h	Data bit that corresponds to the single-bit error
15	clr_ctrl_reg_err	R/W1C	0h	Clear control reg error Error Status, you must also re write the contorl ergister itself to clear this
14-13	clr_parity_err	R/Wdecr	0h	Clear parity Error Status
12	clr_ecc_other	R/W1C	0h	Clear other Error Status
11-10	clr_ecc_ded	R/Wdecr	0h	Clear Double Bit Error Status
9-8	clr_ecc_sec	R/Wdecr	0h	Clear Single Bit Error Status
7	ctr_reg_err	R/W1S	0h	control register error pending, Level interrupt
6-5	parity_err	R/W1S	0h	Level parity error Error Status
4	ecc_other	R/W1S	0h	successive single-bit errors have occurred while a writeback is still pending, Level interrupt
3-2	ecc_ded	R/Wincr	0h	Level Double Bit Error Status
1-0	ecc_sec	R/Wincr	0h	Level Single Bit Error Status

Copyright © 2025 Texas Instruments Incorporated

11.8.5.1.9 err_stat2 Register (Offset = 24h) [reset = 0h]

err_stat2 is shown in Figure 11-445 and described in Table 11-1658.

Return to the Table 11-1649.

ECC Error Status2 Register

Figure 11-445. err_stat2 Register

31	30	29	28	27	26	25	24	23	22	21	20	19	18	17	16	15	14	13	12	11	10	9	8	7	6	5	4	3	2	1	0
ecc_row																															
R-0h																															

Table 11-1658. err_stat2 Register Field Descriptions

Bit	Field	Type	Reset	Description
31-0	ecc_row	R	0h	Row address where the single or double-bit error has occurred

Copyright © 2025 Texas Instruments Incorporated

11.8.5.1.10 err_stat3 Register (Offset = 28h) [reset = X]

err_stat3 is shown in Figure 11-446 and described in Table 11-1659.

Return to the Table 11-1649.

ECC Error Status3 Register

Figure 11-446. err_stat3 Register

31	30	29	28	27	26	25	24
RESERVED							
R/W-X							
23	22	21	20	19	18	17	16
RESERVED							
R/W-X							
15	14	13	12	11	10	9	8
RESERVED						clr_svbus_timeout_err	RESERVED
R/W-X						R/W1C-0h	R/W-X
7	6	5	4	3	2	1	0
RESERVED						svbus_timeout_err	wb_pend
R/W-X						R/W1S-0h	R-0h

Table 11-1659. err_stat3 Register Field Descriptions

Bit	Field	Type	Reset	Description
31-10	RESERVED	R/W	X	
9	clr_svbus_timeout_err	R/W1C	0h	Clear svbus timeout Error Status
8-2	RESERVED	R/W	X	
1	svbus_timeout_err	R/W1S	0h	Level svbus timeout error Error Status
0	wb_pend	R	0h	delayed write back pending Status

Copyright © 2025 Texas Instruments Incorporated

11.8.5.1.11 sec_eoi_reg Register (Offset = 3Ch) [reset = X]

sec_eoi_reg is shown in Figure 11-447 and described in Table 11-1660.

Return to the Table 11-1649.

EOI Register

Figure 11-447. sec_eoi_reg Register

31	30	29	28	27	26	25	24
RESERVED							
R/W-X							
23	22	21	20	19	18	17	16
RESERVED							
R/W-X							
15	14	13	12	11	10	9	8
RESERVED							
R/W-X							
7	6	5	4	3	2	1	0
RESERVED							eoi_wr
R/W-X							R/W1S-0h

Table 11-1660. sec_eoi_reg Register Field Descriptions

Bit	Field	Type	Reset	Description
31-1	RESERVED	R/W	X	
0	eoi_wr	R/W1S	0h	EOI Register

Copyright © 2025 Texas Instruments Incorporated

11.8.5.1.12 sec_status_reg0 Register (Offset = 40h) [reset = X]

sec_status_reg0 is shown in Figure 11-448 and described in Table 11-1661.

Return to the Table 11-1649.

Interrupt Status Register 0

Figure 11-448. sec_status_reg0 Register

31	30	29	28	27	26	25	24
RESERVED							
R/W-X							
23	22	21	20	19	18	17	16
RESERVED	rcss_tptc_b1_pend	rcss_tptc_b0_pend	rcss_tptc_a1_pend	rcss_tptc_a0_pend	dss_tptc_c5_pend	dss_tptc_c4_pend	dss_tptc_c3_pend
R/W-X	R/W1S-0h	R/W1S-0h	R/W1S-0h	R/W1S-0h	R/W1S-0h	R/W1S-0h	R/W1S-0h
15	14	13	12	11	10	9	8
dss_tptc_c2_pend	dss_tptc_c1_pend	dss_tptc_c0_pend	dss_tptc_b1_pend	dss_tptc_b0_pend	dss_tptc_a1_pend	dss_tptc_a0_pend	hwacm4_mailbox_pend
R/W1S-0h	R/W1S-0h	R/W1S-0h	R/W1S-0h	R/W1S-0h	R/W1S-0h	R/W1S-0h	R/W1S-0h
7	6	5	4	3	2	1	0
hwacm4_ram_b2_pend	hwacm4_ram_b1_pend	hwacm4_ram_b0_pend	dss_mailbox_pend	dss_l3ram3_pend	dss_l3ram2_pend	dss_l3ram1_pend	dss_l3ram0_pend
R/W1S-0h	R/W1S-0h	R/W1S-0h	R/W1S-0h	R/W1S-0h	R/W1S-0h	R/W1S-0h	R/W1S-0h

Table 11-1661. sec_status_reg0 Register Field Descriptions

Bit	Field	Type	Reset	Description
31-23	RESERVED	R/W	X	
22	rcss_tptc_b1_pend	R/W1S	0h	Interrupt Pending Status for rcss_tptc_b1_pend
21	rcss_tptc_b0_pend	R/W1S	0h	Interrupt Pending Status for rcss_tptc_b0_pend
20	rcss_tptc_a1_pend	R/W1S	0h	Interrupt Pending Status for rcss_tptc_a1_pend
19	rcss_tptc_a0_pend	R/W1S	0h	Interrupt Pending Status for rcss_tptc_a0_pend
18	dss_tptc_c5_pend	R/W1S	0h	Interrupt Pending Status for dss_tptc_c5_pend
17	dss_tptc_c4_pend	R/W1S	0h	Interrupt Pending Status for dss_tptc_c4_pend
16	dss_tptc_c3_pend	R/W1S	0h	Interrupt Pending Status for dss_tptc_c3_pend
15	dss_tptc_c2_pend	R/W1S	0h	Interrupt Pending Status for dss_tptc_c2_pend
14	dss_tptc_c1_pend	R/W1S	0h	Interrupt Pending Status for dss_tptc_c1_pend
13	dss_tptc_c0_pend	R/W1S	0h	Interrupt Pending Status for dss_tptc_c0_pend
12	dss_tptc_b1_pend	R/W1S	0h	Interrupt Pending Status for dss_tptc_b1_pend
11	dss_tptc_b0_pend	R/W1S	0h	Interrupt Pending Status for dss_tptc_b0_pend
10	dss_tptc_a1_pend	R/W1S	0h	Interrupt Pending Status for dss_tptc_a1_pend
9	dss_tptc_a0_pend	R/W1S	0h	Interrupt Pending Status for dss_tptc_a0_pend
8	hwacm4_mailbox_pend	R/W1S	0h	Interrupt Pending Status for hwacm4_mailbox_pend
7	hwacm4_ram_b2_pend	R/W1S	0h	Interrupt Pending Status for hwacm4_ram_b2_pend
6	hwacm4_ram_b1_pend	R/W1S	0h	Interrupt Pending Status for hwacm4_ram_b1_pend
5	hwacm4_ram_b0_pend	R/W1S	0h	Interrupt Pending Status for hwacm4_ram_b0_pend
4	dss_mailbox_pend	R/W1S	0h	Interrupt Pending Status for dss_mailbox_pend

Copyright © 2025 Texas Instruments Incorporated

Table 11-1661. sec_status_reg0 Register Field Descriptions (continued)

Bit	Field	Type	Reset	Description
3	dss_l3ram3_pend	R/W1S	0h	Interrupt Pending Status for dss_l3ram3_pend
2	dss_l3ram2_pend	R/W1S	0h	Interrupt Pending Status for dss_l3ram2_pend
1	dss_l3ram1_pend	R/W1S	0h	Interrupt Pending Status for dss_l3ram1_pend
0	dss_l3ram0_pend	R/W1S	0h	Interrupt Pending Status for dss_l3ram0_pend

Copyright © 2025 Texas Instruments Incorporated

11.8.5.1.13 sec_enable_set_reg0 Register (Offset = 80h) [reset = X]

sec_enable_set_reg0 is shown in Figure 11-449 and described in Table 11-1662.

Return to the Table 11-1649.

Interrupt Enable Set Register 0

Figure 11-449. sec_enable_set_reg0 Register

31	30	29	28	27	26	25	24
RESERVED							
R/W-X							
23	22	21	20	19	18	17	16
RESERVED	rcss_tptc_b1_enable_set	rcss_tptc_b0_enable_set	rcss_tptc_a1_enable_set	rcss_tptc_a0_enable_set	dss_tptc_c5_enable_set	dss_tptc_c4_enable_set	dss_tptc_c3_enable_set
R/W-X	R/W1S-0h	R/W1S-0h	R/W1S-0h	R/W1S-0h	R/W1S-0h	R/W1S-0h	R/W1S-0h
15	14	13	12	11	10	9	8
dss_tptc_c2_enable_set	dss_tptc_c1_enable_set	dss_tptc_c0_enable_set	dss_tptc_b1_enable_set	dss_tptc_b0_enable_set	dss_tptc_a1_enable_set	dss_tptc_a0_enable_set	hwacm4_mailbox_enable_set
R/W1S-0h	R/W1S-0h	R/W1S-0h	R/W1S-0h	R/W1S-0h	R/W1S-0h	R/W1S-0h	R/W1S-0h
7	6	5	4	3	2	1	0
hwacm4_ram_b2_enable_set	hwacm4_ram_b1_enable_set	hwacm4_ram_b0_enable_set	dss_mailbox_enable_set	dss_l3ram3_enable_set	dss_l3ram2_enable_set	dss_l3ram1_enable_set	dss_l3ram0_enable_set
R/W1S-0h	R/W1S-0h	R/W1S-0h	R/W1S-0h	R/W1S-0h	R/W1S-0h	R/W1S-0h	R/W1S-0h

Table 11-1662. sec_enable_set_reg0 Register Field Descriptions

Bit	Field	Type	Reset	Description
31-23	RESERVED	R/W	X	
22	rcss_tptc_b1_enable_set	R/W1S	0h	Interrupt Enable Set Register for rcss_tptc_b1_pend
21	rcss_tptc_b0_enable_set	R/W1S	0h	Interrupt Enable Set Register for rcss_tptc_b0_pend
20	rcss_tptc_a1_enable_set	R/W1S	0h	Interrupt Enable Set Register for rcss_tptc_a1_pend
19	rcss_tptc_a0_enable_set	R/W1S	0h	Interrupt Enable Set Register for rcss_tptc_a0_pend
18	dss_tptc_c5_enable_set	R/W1S	0h	Interrupt Enable Set Register for dss_tptc_c5_pend
17	dss_tptc_c4_enable_set	R/W1S	0h	Interrupt Enable Set Register for dss_tptc_c4_pend
16	dss_tptc_c3_enable_set	R/W1S	0h	Interrupt Enable Set Register for dss_tptc_c3_pend
15	dss_tptc_c2_enable_set	R/W1S	0h	Interrupt Enable Set Register for dss_tptc_c2_pend
14	dss_tptc_c1_enable_set	R/W1S	0h	Interrupt Enable Set Register for dss_tptc_c1_pend
13	dss_tptc_c0_enable_set	R/W1S	0h	Interrupt Enable Set Register for dss_tptc_c0_pend
12	dss_tptc_b1_enable_set	R/W1S	0h	Interrupt Enable Set Register for dss_tptc_b1_pend
11	dss_tptc_b0_enable_set	R/W1S	0h	Interrupt Enable Set Register for dss_tptc_b0_pend
10	dss_tptc_a1_enable_set	R/W1S	0h	Interrupt Enable Set Register for dss_tptc_a1_pend
9	dss_tptc_a0_enable_set	R/W1S	0h	Interrupt Enable Set Register for dss_tptc_a0_pend
8	hwacm4_mailbox_enable_set	R/W1S	0h	Interrupt Enable Set Register for hwacm4_mailbox_pend
7	hwacm4_ram_b2_enable_set	R/W1S	0h	Interrupt Enable Set Register for hwacm4_ram_b2_pend
6	hwacm4_ram_b1_enable_set	R/W1S	0h	Interrupt Enable Set Register for hwacm4_ram_b1_pend

Copyright © 2025 Texas Instruments Incorporated

Table 11-1662. sec_enable_set_reg0 Register Field Descriptions (continued)

Bit	Field	Type	Reset	Description
5	hwacm4_ram_b0_enable_set	R/W1S	0h	Interrupt Enable Set Register for hwacm4_ram_b0_pend
4	dss_mailbox_enable_set	R/W1S	0h	Interrupt Enable Set Register for dss_mailbox_pend
3	dss_l3ram3_enable_set	R/W1S	0h	Interrupt Enable Set Register for dss_l3ram3_pend
2	dss_l3ram2_enable_set	R/W1S	0h	Interrupt Enable Set Register for dss_l3ram2_pend
1	dss_l3ram1_enable_set	R/W1S	0h	Interrupt Enable Set Register for dss_l3ram1_pend
0	dss_l3ram0_enable_set	R/W1S	0h	Interrupt Enable Set Register for dss_l3ram0_pend

Copyright © 2025 Texas Instruments Incorporated

11.8.5.1.14 sec_enable_clr_reg0 Register (Offset = C0h) [reset = X]

sec_enable_clr_reg0 is shown in Figure 11-450 and described in Table 11-1663.

Return to the Table 11-1649.

Interrupt Enable Clear Register 0

Figure 11-450. sec_enable_clr_reg0 Register

31	30	29	28	27	26	25	24
RESERVED							
R/W-X							
23	22	21	20	19	18	17	16
RESERVED	rcss_tptc_b1_enable_clr	rcss_tptc_b0_enable_clr	rcss_tptc_a1_enable_clr	rcss_tptc_a0_enable_clr	dss_tptc_c5_enable_clr	dss_tptc_c4_enable_clr	dss_tptc_c3_enable_clr
R/W-X	R/W1C-0h	R/W1C-0h	R/W1C-0h	R/W1C-0h	R/W1C-0h	R/W1C-0h	R/W1C-0h
15	14	13	12	11	10	9	8
dss_tptc_c2_enable_clr	dss_tptc_c1_enable_clr	dss_tptc_c0_enable_clr	dss_tptc_b1_enable_clr	dss_tptc_b0_enable_clr	dss_tptc_a1_enable_clr	dss_tptc_a0_enable_clr	hwacm4_mailbox_enable_clr
R/W1C-0h	R/W1C-0h	R/W1C-0h	R/W1C-0h	R/W1C-0h	R/W1C-0h	R/W1C-0h	R/W1C-0h
7	6	5	4	3	2	1	0
hwacm4_ram_b2_enable_clr	hwacm4_ram_b1_enable_clr	hwacm4_ram_b0_enable_clr	dss_mailbox_enable_clr	dss_l3ram3_enable_clr	dss_l3ram2_enable_clr	dss_l3ram1_enable_clr	dss_l3ram0_enable_clr
R/W1C-0h	R/W1C-0h	R/W1C-0h	R/W1C-0h	R/W1C-0h	R/W1C-0h	R/W1C-0h	R/W1C-0h

Table 11-1663. sec_enable_clr_reg0 Register Field Descriptions

Bit	Field	Type	Reset	Description
31-23	RESERVED	R/W	X	
22	rcss_tptc_b1_enable_clr	R/W1C	0h	Interrupt Enable Clear Register for rcss_tptc_b1_pend
21	rcss_tptc_b0_enable_clr	R/W1C	0h	Interrupt Enable Clear Register for rcss_tptc_b0_pend
20	rcss_tptc_a1_enable_clr	R/W1C	0h	Interrupt Enable Clear Register for rcss_tptc_a1_pend
19	rcss_tptc_a0_enable_clr	R/W1C	0h	Interrupt Enable Clear Register for rcss_tptc_a0_pend
18	dss_tptc_c5_enable_clr	R/W1C	0h	Interrupt Enable Clear Register for dss_tptc_c5_pend
17	dss_tptc_c4_enable_clr	R/W1C	0h	Interrupt Enable Clear Register for dss_tptc_c4_pend
16	dss_tptc_c3_enable_clr	R/W1C	0h	Interrupt Enable Clear Register for dss_tptc_c3_pend
15	dss_tptc_c2_enable_clr	R/W1C	0h	Interrupt Enable Clear Register for dss_tptc_c2_pend
14	dss_tptc_c1_enable_clr	R/W1C	0h	Interrupt Enable Clear Register for dss_tptc_c1_pend
13	dss_tptc_c0_enable_clr	R/W1C	0h	Interrupt Enable Clear Register for dss_tptc_c0_pend
12	dss_tptc_b1_enable_clr	R/W1C	0h	Interrupt Enable Clear Register for dss_tptc_b1_pend
11	dss_tptc_b0_enable_clr	R/W1C	0h	Interrupt Enable Clear Register for dss_tptc_b0_pend
10	dss_tptc_a1_enable_clr	R/W1C	0h	Interrupt Enable Clear Register for dss_tptc_a1_pend
9	dss_tptc_a0_enable_clr	R/W1C	0h	Interrupt Enable Clear Register for dss_tptc_a0_pend
8	hwacm4_mailbox_enable_clr	R/W1C	0h	Interrupt Enable Clear Register for hwacm4_mailbox_pend
7	hwacm4_ram_b2_enable_clr	R/W1C	0h	Interrupt Enable Clear Register for hwacm4_ram_b2_pend
6	hwacm4_ram_b1_enable_clr	R/W1C	0h	Interrupt Enable Clear Register for hwacm4_ram_b1_pend

Copyright © 2025 Texas Instruments Incorporated

Table 11-1663. sec_enable_clr_reg0 Register Field Descriptions (continued)

Bit	Field	Type	Reset	Description
5	hwacm4_ram_b0_enable_clr	R/W1C	0h	Interrupt Enable Clear Register for hwacm4_ram_b0_pend
4	dss_mailbox_enable_clr	R/W1C	0h	Interrupt Enable Clear Register for dss_mailbox_pend
3	dss_l3ram3_enable_clr	R/W1C	0h	Interrupt Enable Clear Register for dss_l3ram3_pend
2	dss_l3ram2_enable_clr	R/W1C	0h	Interrupt Enable Clear Register for dss_l3ram2_pend
1	dss_l3ram1_enable_clr	R/W1C	0h	Interrupt Enable Clear Register for dss_l3ram1_pend
0	dss_l3ram0_enable_clr	R/W1C	0h	Interrupt Enable Clear Register for dss_l3ram0_pend

Copyright © 2025 Texas Instruments Incorporated

11.8.5.1.15 ded_eoi_reg Register (Offset = 13Ch) [reset = X]

ded_eoi_reg is shown in Figure 11-451 and described in Table 11-1664.

Return to the Table 11-1649.

EOI Register

Figure 11-451. ded_eoi_reg Register

31	30	29	28	27	26	25	24
RESERVED							
R/W-X							
23	22	21	20	19	18	17	16
RESERVED							
R/W-X							
15	14	13	12	11	10	9	8
RESERVED							
R/W-X							
7	6	5	4	3	2	1	0
RESERVED							eoi_wr
R/W-X							R/W1S-0h

Table 11-1664. ded_eoi_reg Register Field Descriptions

Bit	Field	Type	Reset	Description
31-1	RESERVED	R/W	X	
0	eoi_wr	R/W1S	0h	EOI Register

Copyright © 2025 Texas Instruments Incorporated

11.8.5.1.16 ded_status_reg0 Register (Offset = 140h) [reset = X]

ded_status_reg0 is shown in Figure 11-452 and described in Table 11-1665.

Return to the Table 11-1649.

Interrupt Status Register 0

Figure 11-452. ded_status_reg0 Register

31	30	29	28	27	26	25	24
RESERVED							
R/W-X							
23	22	21	20	19	18	17	16
RESERVED	rcss_tptc_b1_pend	rcss_tptc_b0_pend	rcss_tptc_a1_pend	rcss_tptc_a0_pend	dss_tptc_c5_pend	dss_tptc_c4_pend	dss_tptc_c3_pend
R/W-X	R/W1S-0h	R/W1S-0h	R/W1S-0h	R/W1S-0h	R/W1S-0h	R/W1S-0h	R/W1S-0h
15	14	13	12	11	10	9	8
dss_tptc_c2_pend	dss_tptc_c1_pend	dss_tptc_c0_pend	dss_tptc_b1_pend	dss_tptc_b0_pend	dss_tptc_a1_pend	dss_tptc_a0_pend	hwacm4_mailbox_pend
R/W1S-0h	R/W1S-0h	R/W1S-0h	R/W1S-0h	R/W1S-0h	R/W1S-0h	R/W1S-0h	R/W1S-0h
7	6	5	4	3	2	1	0
hwacm4_ram_b2_pend	hwacm4_ram_b1_pend	hwacm4_ram_b0_pend	dss_mailbox_pend	dss_l3ram3_pend	dss_l3ram2_pend	dss_l3ram1_pend	dss_l3ram0_pend
R/W1S-0h	R/W1S-0h	R/W1S-0h	R/W1S-0h	R/W1S-0h	R/W1S-0h	R/W1S-0h	R/W1S-0h

Table 11-1665. ded_status_reg0 Register Field Descriptions

Bit	Field	Type	Reset	Description
31-23	RESERVED	R/W	X	
22	rcss_tptc_b1_pend	R/W1S	0h	Interrupt Pending Status for rcss_tptc_b1_pend
21	rcss_tptc_b0_pend	R/W1S	0h	Interrupt Pending Status for rcss_tptc_b0_pend
20	rcss_tptc_a1_pend	R/W1S	0h	Interrupt Pending Status for rcss_tptc_a1_pend
19	rcss_tptc_a0_pend	R/W1S	0h	Interrupt Pending Status for rcss_tptc_a0_pend
18	dss_tptc_c5_pend	R/W1S	0h	Interrupt Pending Status for dss_tptc_c5_pend
17	dss_tptc_c4_pend	R/W1S	0h	Interrupt Pending Status for dss_tptc_c4_pend
16	dss_tptc_c3_pend	R/W1S	0h	Interrupt Pending Status for dss_tptc_c3_pend
15	dss_tptc_c2_pend	R/W1S	0h	Interrupt Pending Status for dss_tptc_c2_pend
14	dss_tptc_c1_pend	R/W1S	0h	Interrupt Pending Status for dss_tptc_c1_pend
13	dss_tptc_c0_pend	R/W1S	0h	Interrupt Pending Status for dss_tptc_c0_pend
12	dss_tptc_b1_pend	R/W1S	0h	Interrupt Pending Status for dss_tptc_b1_pend
11	dss_tptc_b0_pend	R/W1S	0h	Interrupt Pending Status for dss_tptc_b0_pend
10	dss_tptc_a1_pend	R/W1S	0h	Interrupt Pending Status for dss_tptc_a1_pend
9	dss_tptc_a0_pend	R/W1S	0h	Interrupt Pending Status for dss_tptc_a0_pend
8	hwacm4_mailbox_pend	R/W1S	0h	Interrupt Pending Status for hwacm4_mailbox_pend
7	hwacm4_ram_b2_pend	R/W1S	0h	Interrupt Pending Status for hwacm4_ram_b2_pend
6	hwacm4_ram_b1_pend	R/W1S	0h	Interrupt Pending Status for hwacm4_ram_b1_pend
5	hwacm4_ram_b0_pend	R/W1S	0h	Interrupt Pending Status for hwacm4_ram_b0_pend
4	dss_mailbox_pend	R/W1S	0h	Interrupt Pending Status for dss_mailbox_pend

Copyright © 2025 Texas Instruments Incorporated

Table 11-1665. ded_status_reg0 Register Field Descriptions (continued)

Bit	Field	Type	Reset	Description
3	dss_l3ram3_pend	R/W1S	0h	Interrupt Pending Status for dss_l3ram3_pend
2	dss_l3ram2_pend	R/W1S	0h	Interrupt Pending Status for dss_l3ram2_pend
1	dss_l3ram1_pend	R/W1S	0h	Interrupt Pending Status for dss_l3ram1_pend
0	dss_l3ram0_pend	R/W1S	0h	Interrupt Pending Status for dss_l3ram0_pend

Copyright © 2025 Texas Instruments Incorporated

11.8.5.1.17 ded_enable_set_reg0 Register (Offset = 180h) [reset = X]

ded_enable_set_reg0 is shown in Figure 11-453 and described in Table 11-1666.

Return to the Table 11-1649.

Interrupt Enable Set Register 0

Figure 11-453. ded_enable_set_reg0 Register

31	30	29	28	27	26	25	24
RESERVED							
R/W-X							
23	22	21	20	19	18	17	16
RESERVED	rcss_tptc_b1_enable_set	rcss_tptc_b0_enable_set	rcss_tptc_a1_enable_set	rcss_tptc_a0_enable_set	dss_tptc_c5_enable_set	dss_tptc_c4_enable_set	dss_tptc_c3_enable_set
R/W-X	R/W1S-0h	R/W1S-0h	R/W1S-0h	R/W1S-0h	R/W1S-0h	R/W1S-0h	R/W1S-0h
15	14	13	12	11	10	9	8
dss_tptc_c2_enable_set	dss_tptc_c1_enable_set	dss_tptc_c0_enable_set	dss_tptc_b1_enable_set	dss_tptc_b0_enable_set	dss_tptc_a1_enable_set	dss_tptc_a0_enable_set	hwacm4_mailbox_enable_set
R/W1S-0h	R/W1S-0h	R/W1S-0h	R/W1S-0h	R/W1S-0h	R/W1S-0h	R/W1S-0h	R/W1S-0h
7	6	5	4	3	2	1	0
hwacm4_ram_b2_enable_set	hwacm4_ram_b1_enable_set	hwacm4_ram_b0_enable_set	dss_mailbox_enable_set	dss_l3ram3_enable_set	dss_l3ram2_enable_set	dss_l3ram1_enable_set	dss_l3ram0_enable_set
R/W1S-0h	R/W1S-0h	R/W1S-0h	R/W1S-0h	R/W1S-0h	R/W1S-0h	R/W1S-0h	R/W1S-0h

Table 11-1666. ded_enable_set_reg0 Register Field Descriptions

Bit	Field	Type	Reset	Description
31-23	RESERVED	R/W	X	
22	rcss_tptc_b1_enable_set	R/W1S	0h	Interrupt Enable Set Register for rcss_tptc_b1_pend
21	rcss_tptc_b0_enable_set	R/W1S	0h	Interrupt Enable Set Register for rcss_tptc_b0_pend
20	rcss_tptc_a1_enable_set	R/W1S	0h	Interrupt Enable Set Register for rcss_tptc_a1_pend
19	rcss_tptc_a0_enable_set	R/W1S	0h	Interrupt Enable Set Register for rcss_tptc_a0_pend
18	dss_tptc_c5_enable_set	R/W1S	0h	Interrupt Enable Set Register for dss_tptc_c5_pend
17	dss_tptc_c4_enable_set	R/W1S	0h	Interrupt Enable Set Register for dss_tptc_c4_pend
16	dss_tptc_c3_enable_set	R/W1S	0h	Interrupt Enable Set Register for dss_tptc_c3_pend
15	dss_tptc_c2_enable_set	R/W1S	0h	Interrupt Enable Set Register for dss_tptc_c2_pend
14	dss_tptc_c1_enable_set	R/W1S	0h	Interrupt Enable Set Register for dss_tptc_c1_pend
13	dss_tptc_c0_enable_set	R/W1S	0h	Interrupt Enable Set Register for dss_tptc_c0_pend
12	dss_tptc_b1_enable_set	R/W1S	0h	Interrupt Enable Set Register for dss_tptc_b1_pend
11	dss_tptc_b0_enable_set	R/W1S	0h	Interrupt Enable Set Register for dss_tptc_b0_pend
10	dss_tptc_a1_enable_set	R/W1S	0h	Interrupt Enable Set Register for dss_tptc_a1_pend
9	dss_tptc_a0_enable_set	R/W1S	0h	Interrupt Enable Set Register for dss_tptc_a0_pend
8	hwacm4_mailbox_enable_set	R/W1S	0h	Interrupt Enable Set Register for hwacm4_mailbox_pend
7	hwacm4_ram_b2_enable_set	R/W1S	0h	Interrupt Enable Set Register for hwacm4_ram_b2_pend
6	hwacm4_ram_b1_enable_set	R/W1S	0h	Interrupt Enable Set Register for hwacm4_ram_b1_pend

Copyright © 2025 Texas Instruments Incorporated

Table 11-1666. ded_enable_set_reg0 Register Field Descriptions (continued)

Bit	Field	Type	Reset	Description
5	hwacm4_ram_b0_enable_set	R/W1S	0h	Interrupt Enable Set Register for hwacm4_ram_b0_pend
4	dss_mailbox_enable_set	R/W1S	0h	Interrupt Enable Set Register for dss_mailbox_pend
3	dss_l3ram3_enable_set	R/W1S	0h	Interrupt Enable Set Register for dss_l3ram3_pend
2	dss_l3ram2_enable_set	R/W1S	0h	Interrupt Enable Set Register for dss_l3ram2_pend
1	dss_l3ram1_enable_set	R/W1S	0h	Interrupt Enable Set Register for dss_l3ram1_pend
0	dss_l3ram0_enable_set	R/W1S	0h	Interrupt Enable Set Register for dss_l3ram0_pend

Copyright © 2025 Texas Instruments Incorporated

11.8.5.1.18 ded_enable_clr_reg0 Register (Offset = 1C0h) [reset = X]

ded_enable_clr_reg0 is shown in Figure 11-454 and described in Table 11-1667.

Return to the Table 11-1649.

Interrupt Enable Clear Register 0

Figure 11-454. ded_enable_clr_reg0 Register

31	30	29	28	27	26	25	24
RESERVED							
R/W-X							
23	22	21	20	19	18	17	16
RESERVED	rcss_tptc_b1_enable_clr	rcss_tptc_b0_enable_clr	rcss_tptc_a1_enable_clr	rcss_tptc_a0_enable_clr	dss_tptc_c5_enable_clr	dss_tptc_c4_enable_clr	dss_tptc_c3_enable_clr
R/W-X	R/W1C-0h	R/W1C-0h	R/W1C-0h	R/W1C-0h	R/W1C-0h	R/W1C-0h	R/W1C-0h
15	14	13	12	11	10	9	8
dss_tptc_c2_enable_clr	dss_tptc_c1_enable_clr	dss_tptc_c0_enable_clr	dss_tptc_b1_enable_clr	dss_tptc_b0_enable_clr	dss_tptc_a1_enable_clr	dss_tptc_a0_enable_clr	hwacm4_mailbox_enable_clr
R/W1C-0h	R/W1C-0h	R/W1C-0h	R/W1C-0h	R/W1C-0h	R/W1C-0h	R/W1C-0h	R/W1C-0h
7	6	5	4	3	2	1	0
hwacm4_ram_b2_enable_clr	hwacm4_ram_b1_enable_clr	hwacm4_ram_b0_enable_clr	dss_mailbox_enable_clr	dss_l3ram3_enable_clr	dss_l3ram2_enable_clr	dss_l3ram1_enable_clr	dss_l3ram0_enable_clr
R/W1C-0h	R/W1C-0h	R/W1C-0h	R/W1C-0h	R/W1C-0h	R/W1C-0h	R/W1C-0h	R/W1C-0h

Table 11-1667. ded_enable_clr_reg0 Register Field Descriptions

Bit	Field	Type	Reset	Description
31-23	RESERVED	R/W	X	
22	rcss_tptc_b1_enable_clr	R/W1C	0h	Interrupt Enable Clear Register for rcss_tptc_b1_pend
21	rcss_tptc_b0_enable_clr	R/W1C	0h	Interrupt Enable Clear Register for rcss_tptc_b0_pend
20	rcss_tptc_a1_enable_clr	R/W1C	0h	Interrupt Enable Clear Register for rcss_tptc_a1_pend
19	rcss_tptc_a0_enable_clr	R/W1C	0h	Interrupt Enable Clear Register for rcss_tptc_a0_pend
18	dss_tptc_c5_enable_clr	R/W1C	0h	Interrupt Enable Clear Register for dss_tptc_c5_pend
17	dss_tptc_c4_enable_clr	R/W1C	0h	Interrupt Enable Clear Register for dss_tptc_c4_pend
16	dss_tptc_c3_enable_clr	R/W1C	0h	Interrupt Enable Clear Register for dss_tptc_c3_pend
15	dss_tptc_c2_enable_clr	R/W1C	0h	Interrupt Enable Clear Register for dss_tptc_c2_pend
14	dss_tptc_c1_enable_clr	R/W1C	0h	Interrupt Enable Clear Register for dss_tptc_c1_pend
13	dss_tptc_c0_enable_clr	R/W1C	0h	Interrupt Enable Clear Register for dss_tptc_c0_pend
12	dss_tptc_b1_enable_clr	R/W1C	0h	Interrupt Enable Clear Register for dss_tptc_b1_pend
11	dss_tptc_b0_enable_clr	R/W1C	0h	Interrupt Enable Clear Register for dss_tptc_b0_pend
10	dss_tptc_a1_enable_clr	R/W1C	0h	Interrupt Enable Clear Register for dss_tptc_a1_pend
9	dss_tptc_a0_enable_clr	R/W1C	0h	Interrupt Enable Clear Register for dss_tptc_a0_pend
8	hwacm4_mailbox_enable_clr	R/W1C	0h	Interrupt Enable Clear Register for hwacm4_mailbox_pend
7	hwacm4_ram_b2_enable_clr	R/W1C	0h	Interrupt Enable Clear Register for hwacm4_ram_b2_pend
6	hwacm4_ram_b1_enable_clr	R/W1C	0h	Interrupt Enable Clear Register for hwacm4_ram_b1_pend

Copyright © 2025 Texas Instruments Incorporated

Table 11-1667. ded_enable_clr_reg0 Register Field Descriptions (continued)

Bit	Field	Type	Reset	Description
5	hwacm4_ram_b0_enable_clr	R/W1C	0h	Interrupt Enable Clear Register for hwacm4_ram_b0_pend
4	dss_mailbox_enable_clr	R/W1C	0h	Interrupt Enable Clear Register for dss_mailbox_pend
3	dss_l3ram3_enable_clr	R/W1C	0h	Interrupt Enable Clear Register for dss_l3ram3_pend
2	dss_l3ram2_enable_clr	R/W1C	0h	Interrupt Enable Clear Register for dss_l3ram2_pend
1	dss_l3ram1_enable_clr	R/W1C	0h	Interrupt Enable Clear Register for dss_l3ram1_pend
0	dss_l3ram0_enable_clr	R/W1C	0h	Interrupt Enable Clear Register for dss_l3ram0_pend

Copyright © 2025 Texas Instruments Incorporated

11.8.5.1.19 aggr_enable_set Register (Offset = 200h) [reset = X]

aggr_enable_set is shown in Figure 11-455 and described in Table 11-1668.

Return to the Table 11-1649.

AGGR interrupt enable set Register

Figure 11-455. aggr_enable_set Register

31	30	29	28	27	26	25	24
RESERVED							
R/W-X							
23	22	21	20	19	18	17	16
RESERVED							
R/W-X							
15	14	13	12	11	10	9	8
RESERVED							
R/W-X							
7	6	5	4	3	2	1	0
RESERVED						timeout	parity
R/W-X						R/W1S-0h	R/W1S-0h

Table 11-1668. aggr_enable_set Register Field Descriptions

Bit	Field	Type	Reset	Description
31-2	RESERVED	R/W	X	
1	timeout	R/W1S	0h	interrupt enable set for svbus timeout errors
0	parity	R/W1S	0h	interrupt enable set for parity errors

Copyright © 2025 Texas Instruments Incorporated

11.8.5.1.20 aggr_enable_clr Register (Offset = 204h) [reset = X]

aggr_enable_clr is shown in Figure 11-456 and described in Table 11-1669.

Return to the Table 11-1649.

AGGR interrupt enable clear Register

Figure 11-456. aggr_enable_clr Register

31	30	29	28	27	26	25	24
RESERVED							
R/W-X							
23	22	21	20	19	18	17	16
RESERVED							
R/W-X							
15	14	13	12	11	10	9	8
RESERVED							
R/W-X							
7	6	5	4	3	2	1	0
RESERVED						timeout	parity
R/W-X						R/W1C-0h	R/W1C-0h

Table 11-1669. aggr_enable_clr Register Field Descriptions

Bit	Field	Type	Reset	Description
31-2	RESERVED	R/W	X	
1	timeout	R/W1C	0h	interrupt enable clear for svbus timeout errors
0	parity	R/W1C	0h	interrupt enable clear for parity errors

Copyright © 2025 Texas Instruments Incorporated

11.8.5.1.21 aggr_status_set Register (Offset = 208h) [reset = X]

aggr_status_set is shown in Figure 11-457 and described in Table 11-1670.

Return to the Table 11-1649.

AGGR interrupt status set Register

Figure 11-457. aggr_status_set Register

31	30	29	28	27	26	25	24
RESERVED							
R/W-X							
23	22	21	20	19	18	17	16
RESERVED							
R/W-X							
15	14	13	12	11	10	9	8
RESERVED							
R/W-X							
7	6	5	4	3	2	1	0
RESERVED				timeout		parity	
R/W-X				R/Wincr-0h		R/Wincr-0h	

Table 11-1670. aggr_status_set Register Field Descriptions

Bit	Field	Type	Reset	Description
31-4	RESERVED	R/W	X	
3-2	timeout	R/Wincr	0h	interrupt status set for svbus timeout errors
1-0	parity	R/Wincr	0h	interrupt status set for parity errors

Copyright © 2025 Texas Instruments Incorporated

11.8.5.1.22 aggr_status_clr Register (Offset = 20Ch) [reset = X]

aggr_status_clr is shown in Figure 11-458 and described in Table 11-1671.

Return to the Table 11-1649.

AGGR interrupt status clear Register

Figure 11-458. aggr_status_clr Register

31	30	29	28	27	26	25	24
RESERVED							
R/W-X							
23	22	21	20	19	18	17	16
RESERVED							
R/W-X							
15	14	13	12	11	10	9	8
RESERVED							
R/W-X							
7	6	5	4	3	2	1	0
RESERVED				timeout		parity	
R/W-X				R/Wdecr-0h		R/Wdecr-0h	

Table 11-1671. aggr_status_clr Register Field Descriptions

Bit	Field	Type	Reset	Description
31-4	RESERVED	R/W	X	
3-2	timeout	R/Wdecr	0h	interrupt status clear for svbus timeout errors
1-0	parity	R/Wdecr	0h	interrupt status clear for parity errors

Copyright © 2025 Texas Instruments Incorporated

11.8.5.2 MSS_ECC_AGGA Registers

Table 11-1672 lists the MSS_ECC_AGGA registers. All register offset addresses not listed in Table 11-1672 should be considered as reserved locations and the register contents should not be modified.

Table 11-1672. MSS_ECC_AGGA Registers

Offset	Acronym	Register Name	Section
0h	rev	Aggregator Revision Register	Section 12.8.5.2.1
8h	vector	ECC Vector Register	Section 12.8.5.2.2
Ch	stat	Misc Status	Section 12.8.5.2.3
10h	wrap_rev	ECC Wrapper Revision Register	Section 12.8.5.2.4
14h	ctrl	ECC Control	Section 12.8.5.2.5
18h	err_ctrl1	ECC Error Control1 Register	Section 12.8.5.2.6
1Ch	err_ctrl2	ECC Error Control2 Register	Section 12.8.5.2.7
20h	err_stat1	ECC Error Status1 Register	Section 12.8.5.2.8
24h	err_stat2	ECC Error Status2 Register	Section 12.8.5.2.9
28h	err_stat3	ECC Error Status3 Register	Section 12.8.5.2.10
3Ch	sec_eoi_reg	EOI Register	Section 12.8.5.2.11
40h	sec_status_reg0	Interrupt Status Register 0	Section 12.8.5.2.12
80h	sec_enable_set_reg0	Interrupt Enable Set Register 0	Section 12.8.5.2.13
C0h	sec_enable_clr_reg0	Interrupt Enable Clear Register 0	Section 12.8.5.2.14
13Ch	ded_eoi_reg	EOI Register	Section 12.8.5.2.15
140h	ded_status_reg0	Interrupt Status Register 0	Section 12.8.5.2.16
180h	ded_enable_set_reg0	Interrupt Enable Set Register 0	Section 12.8.5.2.17
1C0h	ded_enable_clr_reg0	Interrupt Enable Clear Register 0	Section 12.8.5.2.18
200h	aggr_enable_set	AGGR interrupt enable set Register	Section 12.8.5.2.19
204h	aggr_enable_clr	AGGR interrupt enable clear Register	Section 12.8.5.2.20
208h	aggr_status_set	AGGR interrupt status set Register	Section 12.8.5.2.21
20Ch	aggr_status_clr	AGGR interrupt status clear Register	Section 12.8.5.2.22

Copyright © 2025 Texas Instruments Incorporated

11.8.5.2.1 rev Register (Offset = 0h) [reset = 66A0C200h]

rev is shown in Figure 11-459 and described in Table 11-1673.

Return to the Table 11-1672.

Revision parameters

Figure 11-459. rev Register

31	30	29	28	27	26	25	24	23	22	21	20	19	18	17	16
scheme		bu		module_id											
R-1h		R-2h		R-6A0h											
15	14	13	12	11	10	9	8	7	6	5	4	3	2	1	0
revrtl					revmaj			custom		revmin					
R-18h					R-2h			R-0h		R-0h					

Table 11-1673. rev Register Field Descriptions

Bit	Field	Type	Reset	Description
31-30	scheme	R	1h	Scheme
29-28	bu	R	2h	bu
27-16	module_id	R	6A0h	Module ID
15-11	revrtl	R	18h	RTL version
10-8	revmaj	R	2h	Major version
7-6	custom	R	0h	Custom version
5-0	revmin	R	0h	Minor version

Copyright © 2025 Texas Instruments Incorporated

11.8.5.2.2 vector Register (Offset = 8h) [reset = X]

vector is shown in Figure 11-460 and described in Table 11-1674.

Return to the Table 11-1672.

ECC Vector Register

Figure 11-460. vector Register

31	30	29	28	27	26	25	24
RESERVED							rd_svbus_done
R/W-X							R-0h
23	22	21	20	19	18	17	16
rd_svbus_address							
R/W-0h							
15	14	13	12	11	10	9	8
rd_svbus	RESERVED				ecc_vector		
R/W1S-0h	R/W-X				R/W-0h		
7	6	5	4	3	2	1	0
ecc_vector							
R/W-0h							

Table 11-1674. vector Register Field Descriptions

Bit	Field	Type	Reset	Description
31-25	RESERVED	R/W	X	
24	rd_svbus_done	R	0h	Status to indicate if read on serial VBUS is complete
23-16	rd_svbus_address	R/W	0h	Read address
15	rd_svbus	R/W1S	0h	Write 1 to trigger a read on the serial VBUS
14-11	RESERVED	R/W	X	
10-0	ecc_vector	R/W	0h	Value written to select the corresponding ECC RAM for control or status

Copyright © 2025 Texas Instruments Incorporated

11.8.5.2.3 stat Register (Offset = Ch) [reset = X]

stat is shown in Figure 11-461 and described in Table 11-1675.

Return to the Table 11-1672.

Misc Status

Figure 11-461. stat Register

31	30	29	28	27	26	25	24	23	22	21	20	19	18	17	16	15	14	13	12	11	10	9	8	7	6	5	4	3	2	1	0
RESERVED																					num_rams										
R-X																					R-1Ch										

Table 11-1675. stat Register Field Descriptions

Bit	Field	Type	Reset	Description
31-11	RESERVED	R	X	
10-0	num_rams	R	1Ch	Indicates the number of RAMS serviced by the ECC aggregator

Copyright © 2025 Texas Instruments Incorporated

11.8.5.2.4 wrap_rev Register (Offset = 10h) [reset = 66A40202h]

wrap_rev is shown in Figure 11-462 and described in Table 11-1676.

Return to the Table 11-1672.

Revision parameters

Figure 11-462. wrap_rev Register

31	30	29	28	27	26	25	24	23	22	21	20	19	18	17	16
scheme		bu		module_id											
R-1h		R-2h		R-6A4h											
15	14	13	12	11	10	9	8	7	6	5	4	3	2	1	0
revrtl					revmaj			custom		revmin					
R-0h					R-2h			R-0h		R-2h					

Table 11-1676. wrap_rev Register Field Descriptions

Bit	Field	Type	Reset	Description
31-30	scheme	R	1h	Scheme
29-28	bu	R	2h	bu
27-16	module_id	R	6A4h	Module ID
15-11	revrtl	R	0h	RTL version
10-8	revmaj	R	2h	Major version
7-6	custom	R	0h	Custom version
5-0	revmin	R	2h	Minor version

Copyright © 2025 Texas Instruments Incorporated

11.8.5.2.5 ctrl Register (Offset = 14h) [reset = X]

ctrl is shown in Figure 11-463 and described in Table 11-1677.

Return to the Table 11-1672.

ECC Control Register

Figure 11-463. ctrl Register

31	30	29	28	27	26	25	24
RESERVED							
R/W-X							
23	22	21	20	19	18	17	16
RESERVED							
R/W-X							
15	14	13	12	11	10	9	8
RESERVED							check_svbus_timeout
R/W-X							R/W-1h
7	6	5	4	3	2	1	0
check_parity	error_once	force_n_row	force_ded	force_sec	enable_rmw	ecc_check	ecc_enable
R/W-1h	R/W-0h	R/W-0h	R/W-0h	R/W-0h	R/W-1h	R/W-1h	R/W-1h

Table 11-1677. ctrl Register Field Descriptions

Bit	Field	Type	Reset	Description
31-9	RESERVED	R/W	X	
8	check_svbus_timeout	R/W	1h	check for svbus timeout errors
7	check_parity	R/W	1h	check for parity errors
6	error_once	R/W	0h	Force Error only once
5	force_n_row	R/W	0h	Force Error on any RAM read
4	force_ded	R/W	0h	Force Double Bit Error
3	force_sec	R/W	0h	Force Single Bit Error
2	enable_rmw	R/W	1h	Enable rmw
1	ecc_check	R/W	1h	Enable ECC check
0	ecc_enable	R/W	1h	Enable ECC

Copyright © 2025 Texas Instruments Incorporated

11.8.5.2.6 err_ctrl1 Register (Offset = 18h) [reset = 0h]

err_ctrl1 is shown in Figure 11-464 and described in Table 11-1678.

Return to the Table 11-1672.

ECC Error Control1 Register

Figure 11-464. err_ctrl1 Register

31	30	29	28	27	26	25	24	23	22	21	20	19	18	17	16	15	14	13	12	11	10	9	8	7	6	5	4	3	2	1	0
ecc_row																															
R/W-0h																															

Table 11-1678. err_ctrl1 Register Field Descriptions

Bit	Field	Type	Reset	Description
31-0	ecc_row	R/W	0h	Row address where single or double-bit error needs to be applied. This is ignored if force_n_row is set

Copyright © 2025 Texas Instruments Incorporated

11.8.5.2.7 err_ctrl2 Register (Offset = 1Ch) [reset = 0h]

err_ctrl2 is shown in Figure 11-465 and described in Table 11-1679.

Return to the Table 11-1672.

ECC Error Control2 Register

Figure 11-465. err_ctrl2 Register

31	30	29	28	27	26	25	24	23	22	21	20	19	18	17	16	15	14	13	12	11	10	9	8	7	6	5	4	3	2	1	0
ecc_bit2																ecc_bit1															
R/W-0h																R/W-0h															

Table 11-1679. err_ctrl2 Register Field Descriptions

Bit	Field	Type	Reset	Description
31-16	ecc_bit2	R/W	0h	Data bit that needs to be flipped if double bit error needs to be forced
15-0	ecc_bit1	R/W	0h	Data bit that needs to be flipped when force_sec is set

Copyright © 2025 Texas Instruments Incorporated

11.8.5.2.8 err_stat1 Register (Offset = 20h) [reset = 0h]

err_stat1 is shown in Figure 11-466 and described in Table 11-1680.

Return to the Table 11-1672.

ECC Error Status1 Register

Figure 11-466. err_stat1 Register

31	30	29	28	27	26	25	24
ecc_bit1							
R-0h							
23	22	21	20	19	18	17	16
ecc_bit1							
R-0h							
15	14	13	12	11	10	9	8
clr_ctrl_reg_err	clr_parity_err		clr_ecc_other	clr_ecc_ded		clr_ecc_sec	
R/W1C-0h	R/Wdecr-0h		R/W1C-0h	R/Wdecr-0h		R/Wdecr-0h	
7	6	5	4	3	2	1	0
ctr_reg_err	parity_err		ecc_other	ecc_ded		ecc_sec	
R/W1S-0h	R/W1S-0h		R/W1S-0h	R/Wincr-0h		R/Wincr-0h	

Table 11-1680. err_stat1 Register Field Descriptions

Bit	Field	Type	Reset	Description
31-16	ecc_bit1	R	0h	Data bit that corresponds to the single-bit error
15	clr_ctrl_reg_err	R/W1C	0h	Clear control reg error Error Status, you must also re write the contorl ergister itself to clear this
14-13	clr_parity_err	R/Wdecr	0h	Clear parity Error Status
12	clr_ecc_other	R/W1C	0h	Clear other Error Status
11-10	clr_ecc_ded	R/Wdecr	0h	Clear Double Bit Error Status
9-8	clr_ecc_sec	R/Wdecr	0h	Clear Single Bit Error Status
7	ctr_reg_err	R/W1S	0h	control register error pending, Level interrupt
6-5	parity_err	R/W1S	0h	Level parity error Error Status
4	ecc_other	R/W1S	0h	successive single-bit errors have occurred while a writeback is still pending, Level interrupt
3-2	ecc_ded	R/Wincr	0h	Level Double Bit Error Status
1-0	ecc_sec	R/Wincr	0h	Level Single Bit Error Status

Copyright © 2025 Texas Instruments Incorporated

11.8.5.2.9 err_stat2 Register (Offset = 24h) [reset = 0h]

err_stat2 is shown in Figure 11-467 and described in Table 11-1681.

Return to the Table 11-1672.

ECC Error Status2 Register

Figure 11-467. err_stat2 Register

31	30	29	28	27	26	25	24	23	22	21	20	19	18	17	16	15	14	13	12	11	10	9	8	7	6	5	4	3	2	1	0
ecc_row																															
R-0h																															

Table 11-1681. err_stat2 Register Field Descriptions

Bit	Field	Type	Reset	Description
31-0	ecc_row	R	0h	Row address where the single or double-bit error has occurred

Copyright © 2025 Texas Instruments Incorporated

11.8.5.2.10 err_stat3 Register (Offset = 28h) [reset = X]

err_stat3 is shown in Figure 11-468 and described in Table 11-1682.

Return to the Table 11-1672.

ECC Error Status3 Register

Figure 11-468. err_stat3 Register

31	30	29	28	27	26	25	24
RESERVED							
R/W-X							
23	22	21	20	19	18	17	16
RESERVED							
R/W-X							
15	14	13	12	11	10	9	8
RESERVED						clr_svbus_timeout_err	RESERVED
R/W-X						R/W1C-0h	R/W-X
7	6	5	4	3	2	1	0
RESERVED						svbus_timeout_err	wb_pend
R/W-X						R/W1S-0h	R-0h

Table 11-1682. err_stat3 Register Field Descriptions

Bit	Field	Type	Reset	Description
31-10	RESERVED	R/W	X	
9	clr_svbus_timeout_err	R/W1C	0h	Clear svbus timeout Error Status
8-2	RESERVED	R/W	X	
1	svbus_timeout_err	R/W1S	0h	Level svbus timeout error Error Status
0	wb_pend	R	0h	delayed write back pending Status

Copyright © 2025 Texas Instruments Incorporated

11.8.5.2.11 sec_eoi_reg Register (Offset = 3Ch) [reset = X]

sec_eoi_reg is shown in Figure 11-469 and described in Table 11-1683.

Return to the Table 11-1672.

EOI Register

Figure 11-469. sec_eoi_reg Register

31	30	29	28	27	26	25	24
RESERVED							
R/W-X							
23	22	21	20	19	18	17	16
RESERVED							
R/W-X							
15	14	13	12	11	10	9	8
RESERVED							
R/W-X							
7	6	5	4	3	2	1	0
RESERVED							eoi_wr
R/W-X							R/W1S-0h

Table 11-1683. sec_eoi_reg Register Field Descriptions

Bit	Field	Type	Reset	Description
31-1	RESERVED	R/W	X	
0	eoi_wr	R/W1S	0h	EOI Register

Copyright © 2025 Texas Instruments Incorporated

11.8.5.2.12 sec_status_reg0 Register (Offset = 40h) [reset = X]

sec_status_reg0 is shown in Figure 11-470 and described in Table 11-1684.

Return to the Table 11-1672.

Interrupt Status Register 0

Figure 11-470. sec_status_reg0 Register

31	30	29	28	27	26	25	24
RESERVED				cpu0_ks_vim_ramecc_pend	b1tcm0_bank1_pend	b1tcm0_bank0_pend	b0tcm0_bank1_pend
R/W-X				R/W1S-0h	R/W1S-0h	R/W1S-0h	R/W1S-0h
23	22	21	20	19	18	17	16
b0tcm0_bank0_pend	atcm0_bank1_pend	atcm0_bank0_pend	cpu0_ddata_ram7_pend	cpu0_ddata_ram6_pend	cpu0_ddata_ram5_pend	cpu0_ddata_ram4_pend	cpu0_ddata_ram3_pend
R/W1S-0h	R/W1S-0h	R/W1S-0h	R/W1S-0h	R/W1S-0h	R/W1S-0h	R/W1S-0h	R/W1S-0h
15	14	13	12	11	10	9	8
cpu0_ddata_ram2_pend	cpu0_ddata_ram1_pend	cpu0_ddata_ram0_pend	cpu0_ddirty_ram_pend	cpu0_dtag_ram3_pend	cpu0_dtag_ram2_pend	cpu0_dtag_ram1_pend	cpu0_dtag_ram0_pend
R/W1S-0h	R/W1S-0h	R/W1S-0h	R/W1S-0h	R/W1S-0h	R/W1S-0h	R/W1S-0h	R/W1S-0h
7	6	5	4	3	2	1	0
cpu0_idata_bank3_pend	cpu0_idata_bank2_pend	cpu0_idata_bank1_pend	cpu0_idata_bank0_pend	cpu0_itag_ram3_pend	cpu0_itag_ram2_pend	cpu0_itag_ram1_pend	cpu0_itag_ram0_pend
R/W1S-0h	R/W1S-0h	R/W1S-0h	R/W1S-0h	R/W1S-0h	R/W1S-0h	R/W1S-0h	R/W1S-0h

Table 11-1684. sec_status_reg0 Register Field Descriptions

Bit	Field	Type	Reset	Description
31-28	RESERVED	R/W	X	
27	cpu0_ks_vim_ramecc_pend	R/W1S	0h	Interrupt Pending Status for cpu0_ks_vim_ramecc_pend
26	b1tcm0_bank1_pend	R/W1S	0h	Interrupt Pending Status for b1tcm0_bank1_pend
25	b1tcm0_bank0_pend	R/W1S	0h	Interrupt Pending Status for b1tcm0_bank0_pend
24	b0tcm0_bank1_pend	R/W1S	0h	Interrupt Pending Status for b0tcm0_bank1_pend
23	b0tcm0_bank0_pend	R/W1S	0h	Interrupt Pending Status for b0tcm0_bank0_pend
22	atcm0_bank1_pend	R/W1S	0h	Interrupt Pending Status for atcm0_bank1_pend
21	atcm0_bank0_pend	R/W1S	0h	Interrupt Pending Status for atcm0_bank0_pend
20	cpu0_ddata_ram7_pend	R/W1S	0h	Interrupt Pending Status for cpu0_ddata_ram7_pend
19	cpu0_ddata_ram6_pend	R/W1S	0h	Interrupt Pending Status for cpu0_ddata_ram6_pend
18	cpu0_ddata_ram5_pend	R/W1S	0h	Interrupt Pending Status for cpu0_ddata_ram5_pend
17	cpu0_ddata_ram4_pend	R/W1S	0h	Interrupt Pending Status for cpu0_ddata_ram4_pend
16	cpu0_ddata_ram3_pend	R/W1S	0h	Interrupt Pending Status for cpu0_ddata_ram3_pend
15	cpu0_ddata_ram2_pend	R/W1S	0h	Interrupt Pending Status for cpu0_ddata_ram2_pend
14	cpu0_ddata_ram1_pend	R/W1S	0h	Interrupt Pending Status for cpu0_ddata_ram1_pend
13	cpu0_ddata_ram0_pend	R/W1S	0h	Interrupt Pending Status for cpu0_ddata_ram0_pend
12	cpu0_ddirty_ram_pend	R/W1S	0h	Interrupt Pending Status for cpu0_ddirty_ram_pend
11	cpu0_dtag_ram3_pend	R/W1S	0h	Interrupt Pending Status for cpu0_dtag_ram3_pend
10	cpu0_dtag_ram2_pend	R/W1S	0h	Interrupt Pending Status for cpu0_dtag_ram2_pend

Copyright © 2025 Texas Instruments Incorporated

Table 11-1684. sec_status_reg0 Register Field Descriptions (continued)

Bit	Field	Type	Reset	Description
9	cpu0_dtag_ram1_pend	R/W1S	0h	Interrupt Pending Status for cpu0_dtag_ram1_pend
8	cpu0_dtag_ram0_pend	R/W1S	0h	Interrupt Pending Status for cpu0_dtag_ram0_pend
7	cpu0_idata_bank3_pend	R/W1S	0h	Interrupt Pending Status for cpu0_idata_bank3_pend
6	cpu0_idata_bank2_pend	R/W1S	0h	Interrupt Pending Status for cpu0_idata_bank2_pend
5	cpu0_idata_bank1_pend	R/W1S	0h	Interrupt Pending Status for cpu0_idata_bank1_pend
4	cpu0_idata_bank0_pend	R/W1S	0h	Interrupt Pending Status for cpu0_idata_bank0_pend
3	cpu0_itag_ram3_pend	R/W1S	0h	Interrupt Pending Status for cpu0_itag_ram3_pend
2	cpu0_itag_ram2_pend	R/W1S	0h	Interrupt Pending Status for cpu0_itag_ram2_pend
1	cpu0_itag_ram1_pend	R/W1S	0h	Interrupt Pending Status for cpu0_itag_ram1_pend
0	cpu0_itag_ram0_pend	R/W1S	0h	Interrupt Pending Status for cpu0_itag_ram0_pend

Copyright © 2025 Texas Instruments Incorporated

11.8.5.2.13 sec_enable_set_reg0 Register (Offset = 80h) [reset = X]

sec_enable_set_reg0 is shown in Figure 11-471 and described in Table 11-1685.

Return to the Table 11-1672.

Interrupt Enable Set Register 0

Figure 11-471. sec_enable_set_reg0 Register

31	30	29	28	27	26	25	24
RESERVED				cpu0_ks_vim_ramecc_enable_set	b1tcm0_bank1_enable_set	b1tcm0_bank0_enable_set	b0tcm0_bank1_enable_set
R/W-X				R/W1S-0h	R/W1S-0h	R/W1S-0h	R/W1S-0h
23	22	21	20	19	18	17	16
b0tcm0_bank0_enable_set	atcm0_bank1_enable_set	atcm0_bank0_enable_set	cpu0_ddata_ram7_enable_set	cpu0_ddata_ram6_enable_set	cpu0_ddata_ram5_enable_set	cpu0_ddata_ram4_enable_set	cpu0_ddata_ram3_enable_set
R/W1S-0h	R/W1S-0h	R/W1S-0h	R/W1S-0h	R/W1S-0h	R/W1S-0h	R/W1S-0h	R/W1S-0h
15	14	13	12	11	10	9	8
cpu0_ddata_ram2_enable_set	cpu0_ddata_ram1_enable_set	cpu0_ddata_ram0_enable_set	cpu0_ddirty_ram_enable_set	cpu0_dtag_ram3_enable_set	cpu0_dtag_ram2_enable_set	cpu0_dtag_ram1_enable_set	cpu0_dtag_ram0_enable_set
R/W1S-0h	R/W1S-0h	R/W1S-0h	R/W1S-0h	R/W1S-0h	R/W1S-0h	R/W1S-0h	R/W1S-0h
7	6	5	4	3	2	1	0
cpu0_idata_bank3_enable_set	cpu0_idata_bank2_enable_set	cpu0_idata_bank1_enable_set	cpu0_idata_bank0_enable_set	cpu0_itag_ram3_enable_set	cpu0_itag_ram2_enable_set	cpu0_itag_ram1_enable_set	cpu0_itag_ram0_enable_set
R/W1S-0h	R/W1S-0h	R/W1S-0h	R/W1S-0h	R/W1S-0h	R/W1S-0h	R/W1S-0h	R/W1S-0h

Table 11-1685. sec_enable_set_reg0 Register Field Descriptions

Bit	Field	Type	Reset	Description
31-28	RESERVED	R/W	X	
27	cpu0_ks_vim_ramecc_enable_set	R/W1S	0h	Interrupt Enable Set Register for cpu0_ks_vim_ramecc_pend
26	b1tcm0_bank1_enable_set	R/W1S	0h	Interrupt Enable Set Register for b1tcm0_bank1_pend
25	b1tcm0_bank0_enable_set	R/W1S	0h	Interrupt Enable Set Register for b1tcm0_bank0_pend
24	b0tcm0_bank1_enable_set	R/W1S	0h	Interrupt Enable Set Register for b0tcm0_bank1_pend
23	b0tcm0_bank0_enable_set	R/W1S	0h	Interrupt Enable Set Register for b0tcm0_bank0_pend
22	atcm0_bank1_enable_set	R/W1S	0h	Interrupt Enable Set Register for atcm0_bank1_pend
21	atcm0_bank0_enable_set	R/W1S	0h	Interrupt Enable Set Register for atcm0_bank0_pend
20	cpu0_ddata_ram7_enable_set	R/W1S	0h	Interrupt Enable Set Register for cpu0_ddata_ram7_pend
19	cpu0_ddata_ram6_enable_set	R/W1S	0h	Interrupt Enable Set Register for cpu0_ddata_ram6_pend
18	cpu0_ddata_ram5_enable_set	R/W1S	0h	Interrupt Enable Set Register for cpu0_ddata_ram5_pend
17	cpu0_ddata_ram4_enable_set	R/W1S	0h	Interrupt Enable Set Register for cpu0_ddata_ram4_pend
16	cpu0_ddata_ram3_enable_set	R/W1S	0h	Interrupt Enable Set Register for cpu0_ddata_ram3_pend
15	cpu0_ddata_ram2_enable_set	R/W1S	0h	Interrupt Enable Set Register for cpu0_ddata_ram2_pend

Copyright © 2025 Texas Instruments Incorporated

Table 11-1685. sec_enable_set_reg0 Register Field Descriptions (continued)

Bit	Field	Type	Reset	Description
14	cpu0_ddata_ram1_enable_set	R/W1S	0h	Interrupt Enable Set Register for cpu0_ddata_ram1_pend
13	cpu0_ddata_ram0_enable_set	R/W1S	0h	Interrupt Enable Set Register for cpu0_ddata_ram0_pend
12	cpu0_ddirty_ram_enable_set	R/W1S	0h	Interrupt Enable Set Register for cpu0_ddirty_ram_pend
11	cpu0_dtag_ram3_enable_set	R/W1S	0h	Interrupt Enable Set Register for cpu0_dtag_ram3_pend
10	cpu0_dtag_ram2_enable_set	R/W1S	0h	Interrupt Enable Set Register for cpu0_dtag_ram2_pend
9	cpu0_dtag_ram1_enable_set	R/W1S	0h	Interrupt Enable Set Register for cpu0_dtag_ram1_pend
8	cpu0_dtag_ram0_enable_set	R/W1S	0h	Interrupt Enable Set Register for cpu0_dtag_ram0_pend
7	cpu0_idata_bank3_enable_set	R/W1S	0h	Interrupt Enable Set Register for cpu0_idata_bank3_pend
6	cpu0_idata_bank2_enable_set	R/W1S	0h	Interrupt Enable Set Register for cpu0_idata_bank2_pend
5	cpu0_idata_bank1_enable_set	R/W1S	0h	Interrupt Enable Set Register for cpu0_idata_bank1_pend
4	cpu0_idata_bank0_enable_set	R/W1S	0h	Interrupt Enable Set Register for cpu0_idata_bank0_pend
3	cpu0_itag_ram3_enable_set	R/W1S	0h	Interrupt Enable Set Register for cpu0_itag_ram3_pend
2	cpu0_itag_ram2_enable_set	R/W1S	0h	Interrupt Enable Set Register for cpu0_itag_ram2_pend
1	cpu0_itag_ram1_enable_set	R/W1S	0h	Interrupt Enable Set Register for cpu0_itag_ram1_pend
0	cpu0_itag_ram0_enable_set	R/W1S	0h	Interrupt Enable Set Register for cpu0_itag_ram0_pend

Copyright © 2025 Texas Instruments Incorporated

11.8.5.2.14 sec_enable_clr_reg0 Register (Offset = C0h) [reset = X]

sec_enable_clr_reg0 is shown in Figure 11-472 and described in Table 11-1686.

Return to the Table 11-1672.

Interrupt Enable Clear Register 0

Figure 11-472. sec_enable_clr_reg0 Register

31	30	29	28	27	26	25	24
RESERVED				cpu0_ks_vim_ramecc_enable_clr	b1tcm0_bank1_enable_clr	b1tcm0_bank0_enable_clr	b0tcm0_bank1_enable_clr
R/W-X				R/W1C-0h	R/W1C-0h	R/W1C-0h	R/W1C-0h
23	22	21	20	19	18	17	16
b0tcm0_bank0_enable_clr	atcm0_bank1_enable_clr	atcm0_bank0_enable_clr	cpu0_ddata_ram7_enable_clr	cpu0_ddata_ram6_enable_clr	cpu0_ddata_ram5_enable_clr	cpu0_ddata_ram4_enable_clr	cpu0_ddata_ram3_enable_clr
R/W1C-0h	R/W1C-0h	R/W1C-0h	R/W1C-0h	R/W1C-0h	R/W1C-0h	R/W1C-0h	R/W1C-0h
15	14	13	12	11	10	9	8
cpu0_ddata_ram2_enable_clr	cpu0_ddata_ram1_enable_clr	cpu0_ddata_ram0_enable_clr	cpu0_ddirty_ram_enable_clr	cpu0_dtag_ram3_enable_clr	cpu0_dtag_ram2_enable_clr	cpu0_dtag_ram1_enable_clr	cpu0_dtag_ram0_enable_clr
R/W1C-0h	R/W1C-0h	R/W1C-0h	R/W1C-0h	R/W1C-0h	R/W1C-0h	R/W1C-0h	R/W1C-0h
7	6	5	4	3	2	1	0
cpu0_idata_bank3_enable_clr	cpu0_idata_bank2_enable_clr	cpu0_idata_bank1_enable_clr	cpu0_idata_bank0_enable_clr	cpu0_itag_ram3_enable_clr	cpu0_itag_ram2_enable_clr	cpu0_itag_ram1_enable_clr	cpu0_itag_ram0_enable_clr
R/W1C-0h	R/W1C-0h	R/W1C-0h	R/W1C-0h	R/W1C-0h	R/W1C-0h	R/W1C-0h	R/W1C-0h

Table 11-1686. sec_enable_clr_reg0 Register Field Descriptions

Bit	Field	Type	Reset	Description
31-28	RESERVED	R/W	X	
27	cpu0_ks_vim_ramecc_enable_clr	R/W1C	0h	Interrupt Enable Clear Register for cpu0_ks_vim_ramecc_pend
26	b1tcm0_bank1_enable_clr	R/W1C	0h	Interrupt Enable Clear Register for b1tcm0_bank1_pend
25	b1tcm0_bank0_enable_clr	R/W1C	0h	Interrupt Enable Clear Register for b1tcm0_bank0_pend
24	b0tcm0_bank1_enable_clr	R/W1C	0h	Interrupt Enable Clear Register for b0tcm0_bank1_pend
23	b0tcm0_bank0_enable_clr	R/W1C	0h	Interrupt Enable Clear Register for b0tcm0_bank0_pend
22	atcm0_bank1_enable_clr	R/W1C	0h	Interrupt Enable Clear Register for atcm0_bank1_pend
21	atcm0_bank0_enable_clr	R/W1C	0h	Interrupt Enable Clear Register for atcm0_bank0_pend
20	cpu0_ddata_ram7_enable_clr	R/W1C	0h	Interrupt Enable Clear Register for cpu0_ddata_ram7_pend
19	cpu0_ddata_ram6_enable_clr	R/W1C	0h	Interrupt Enable Clear Register for cpu0_ddata_ram6_pend
18	cpu0_ddata_ram5_enable_clr	R/W1C	0h	Interrupt Enable Clear Register for cpu0_ddata_ram5_pend
17	cpu0_ddata_ram4_enable_clr	R/W1C	0h	Interrupt Enable Clear Register for cpu0_ddata_ram4_pend
16	cpu0_ddata_ram3_enable_clr	R/W1C	0h	Interrupt Enable Clear Register for cpu0_ddata_ram3_pend
15	cpu0_ddata_ram2_enable_clr	R/W1C	0h	Interrupt Enable Clear Register for cpu0_ddata_ram2_pend
14	cpu0_ddata_ram1_enable_clr	R/W1C	0h	Interrupt Enable Clear Register for cpu0_ddata_ram1_pend

Copyright © 2025 Texas Instruments Incorporated

Table 11-1686. sec_enable_clr_reg0 Register Field Descriptions (continued)

Bit	Field	Type	Reset	Description
13	cpu0_ddata_ram0_enable_clr	R/W1C	0h	Interrupt Enable Clear Register for cpu0_ddata_ram0_pend
12	cpu0_ddirty_ram_enable_clr	R/W1C	0h	Interrupt Enable Clear Register for cpu0_ddirty_ram_pend
11	cpu0_dtag_ram3_enable_clr	R/W1C	0h	Interrupt Enable Clear Register for cpu0_dtag_ram3_pend
10	cpu0_dtag_ram2_enable_clr	R/W1C	0h	Interrupt Enable Clear Register for cpu0_dtag_ram2_pend
9	cpu0_dtag_ram1_enable_clr	R/W1C	0h	Interrupt Enable Clear Register for cpu0_dtag_ram1_pend
8	cpu0_dtag_ram0_enable_clr	R/W1C	0h	Interrupt Enable Clear Register for cpu0_dtag_ram0_pend
7	cpu0_idata_bank3_enable_clr	R/W1C	0h	Interrupt Enable Clear Register for cpu0_idata_bank3_pend
6	cpu0_idata_bank2_enable_clr	R/W1C	0h	Interrupt Enable Clear Register for cpu0_idata_bank2_pend
5	cpu0_idata_bank1_enable_clr	R/W1C	0h	Interrupt Enable Clear Register for cpu0_idata_bank1_pend
4	cpu0_idata_bank0_enable_clr	R/W1C	0h	Interrupt Enable Clear Register for cpu0_idata_bank0_pend
3	cpu0_itag_ram3_enable_clr	R/W1C	0h	Interrupt Enable Clear Register for cpu0_itag_ram3_pend
2	cpu0_itag_ram2_enable_clr	R/W1C	0h	Interrupt Enable Clear Register for cpu0_itag_ram2_pend
1	cpu0_itag_ram1_enable_clr	R/W1C	0h	Interrupt Enable Clear Register for cpu0_itag_ram1_pend
0	cpu0_itag_ram0_enable_clr	R/W1C	0h	Interrupt Enable Clear Register for cpu0_itag_ram0_pend

Copyright © 2025 Texas Instruments Incorporated

11.8.5.2.15 ded_eoi_reg Register (Offset = 13Ch) [reset = X]

ded_eoi_reg is shown in Figure 11-473 and described in Table 11-1687.

Return to the Table 11-1672.

EOI Register

Figure 11-473. ded_eoi_reg Register

31	30	29	28	27	26	25	24
RESERVED							
R/W-X							
23	22	21	20	19	18	17	16
RESERVED							
R/W-X							
15	14	13	12	11	10	9	8
RESERVED							
R/W-X							
7	6	5	4	3	2	1	0
RESERVED							eoi_wr
R/W-X							R/W1S-0h

Table 11-1687. ded_eoi_reg Register Field Descriptions

Bit	Field	Type	Reset	Description
31-1	RESERVED	R/W	X	
0	eoi_wr	R/W1S	0h	EOI Register

Copyright © 2025 Texas Instruments Incorporated

11.8.5.2.16 ded_status_reg0 Register (Offset = 140h) [reset = X]

ded_status_reg0 is shown in Figure 11-474 and described in Table 11-1688.

Return to the Table 11-1672.

Interrupt Status Register 0

Figure 11-474. ded_status_reg0 Register

31	30	29	28	27	26	25	24
RESERVED				cpu0_ks_vim_ramecc_pend	b1tcm0_bank1_pend	b1tcm0_bank0_pend	b0tcm0_bank1_pend
R/W-X				R/W1S-0h	R/W1S-0h	R/W1S-0h	R/W1S-0h
23	22	21	20	19	18	17	16
b0tcm0_bank0_pend	atcm0_bank1_pend	atcm0_bank0_pend	cpu0_ddata_ram7_pend	cpu0_ddata_ram6_pend	cpu0_ddata_ram5_pend	cpu0_ddata_ram4_pend	cpu0_ddata_ram3_pend
R/W1S-0h	R/W1S-0h	R/W1S-0h	R/W1S-0h	R/W1S-0h	R/W1S-0h	R/W1S-0h	R/W1S-0h
15	14	13	12	11	10	9	8
cpu0_ddata_ram2_pend	cpu0_ddata_ram1_pend	cpu0_ddata_ram0_pend	cpu0_ddirty_ram_pend	cpu0_dtag_ram3_pend	cpu0_dtag_ram2_pend	cpu0_dtag_ram1_pend	cpu0_dtag_ram0_pend
R/W1S-0h	R/W1S-0h	R/W1S-0h	R/W1S-0h	R/W1S-0h	R/W1S-0h	R/W1S-0h	R/W1S-0h
7	6	5	4	3	2	1	0
cpu0_idata_bank3_pend	cpu0_idata_bank2_pend	cpu0_idata_bank1_pend	cpu0_idata_bank0_pend	cpu0_itag_ram3_pend	cpu0_itag_ram2_pend	cpu0_itag_ram1_pend	cpu0_itag_ram0_pend
R/W1S-0h	R/W1S-0h	R/W1S-0h	R/W1S-0h	R/W1S-0h	R/W1S-0h	R/W1S-0h	R/W1S-0h

Table 11-1688. ded_status_reg0 Register Field Descriptions

Bit	Field	Type	Reset	Description
31-28	RESERVED	R/W	X	
27	cpu0_ks_vim_ramecc_pend	R/W1S	0h	Interrupt Pending Status for cpu0_ks_vim_ramecc_pend
26	b1tcm0_bank1_pend	R/W1S	0h	Interrupt Pending Status for b1tcm0_bank1_pend
25	b1tcm0_bank0_pend	R/W1S	0h	Interrupt Pending Status for b1tcm0_bank0_pend
24	b0tcm0_bank1_pend	R/W1S	0h	Interrupt Pending Status for b0tcm0_bank1_pend
23	b0tcm0_bank0_pend	R/W1S	0h	Interrupt Pending Status for b0tcm0_bank0_pend
22	atcm0_bank1_pend	R/W1S	0h	Interrupt Pending Status for atcm0_bank1_pend
21	atcm0_bank0_pend	R/W1S	0h	Interrupt Pending Status for atcm0_bank0_pend
20	cpu0_ddata_ram7_pend	R/W1S	0h	Interrupt Pending Status for cpu0_ddata_ram7_pend
19	cpu0_ddata_ram6_pend	R/W1S	0h	Interrupt Pending Status for cpu0_ddata_ram6_pend
18	cpu0_ddata_ram5_pend	R/W1S	0h	Interrupt Pending Status for cpu0_ddata_ram5_pend
17	cpu0_ddata_ram4_pend	R/W1S	0h	Interrupt Pending Status for cpu0_ddata_ram4_pend
16	cpu0_ddata_ram3_pend	R/W1S	0h	Interrupt Pending Status for cpu0_ddata_ram3_pend
15	cpu0_ddata_ram2_pend	R/W1S	0h	Interrupt Pending Status for cpu0_ddata_ram2_pend
14	cpu0_ddata_ram1_pend	R/W1S	0h	Interrupt Pending Status for cpu0_ddata_ram1_pend
13	cpu0_ddata_ram0_pend	R/W1S	0h	Interrupt Pending Status for cpu0_ddata_ram0_pend
12	cpu0_ddirty_ram_pend	R/W1S	0h	Interrupt Pending Status for cpu0_ddirty_ram_pend
11	cpu0_dtag_ram3_pend	R/W1S	0h	Interrupt Pending Status for cpu0_dtag_ram3_pend
10	cpu0_dtag_ram2_pend	R/W1S	0h	Interrupt Pending Status for cpu0_dtag_ram2_pend

Copyright © 2025 Texas Instruments Incorporated

Table 11-1688. ded_status_reg0 Register Field Descriptions (continued)

Bit	Field	Type	Reset	Description
9	cpu0_dtag_ram1_pend	R/W1S	0h	Interrupt Pending Status for cpu0_dtag_ram1_pend
8	cpu0_dtag_ram0_pend	R/W1S	0h	Interrupt Pending Status for cpu0_dtag_ram0_pend
7	cpu0_idata_bank3_pend	R/W1S	0h	Interrupt Pending Status for cpu0_idata_bank3_pend
6	cpu0_idata_bank2_pend	R/W1S	0h	Interrupt Pending Status for cpu0_idata_bank2_pend
5	cpu0_idata_bank1_pend	R/W1S	0h	Interrupt Pending Status for cpu0_idata_bank1_pend
4	cpu0_idata_bank0_pend	R/W1S	0h	Interrupt Pending Status for cpu0_idata_bank0_pend
3	cpu0_itag_ram3_pend	R/W1S	0h	Interrupt Pending Status for cpu0_itag_ram3_pend
2	cpu0_itag_ram2_pend	R/W1S	0h	Interrupt Pending Status for cpu0_itag_ram2_pend
1	cpu0_itag_ram1_pend	R/W1S	0h	Interrupt Pending Status for cpu0_itag_ram1_pend
0	cpu0_itag_ram0_pend	R/W1S	0h	Interrupt Pending Status for cpu0_itag_ram0_pend

Copyright © 2025 Texas Instruments Incorporated

11.8.5.2.17 ded_enable_set_reg0 Register (Offset = 180h) [reset = X]

ded_enable_set_reg0 is shown in Figure 11-475 and described in Table 11-1689.

Return to the Table 11-1672.

Interrupt Enable Set Register 0

Figure 11-475. ded_enable_set_reg0 Register

31	30	29	28	27	26	25	24
RESERVED				cpu0_ks_vim_ramecc_enable_set	b1tcm0_bank1_enable_set	b1tcm0_bank0_enable_set	b0tcm0_bank1_enable_set
R/W-X				R/W1S-0h	R/W1S-0h	R/W1S-0h	R/W1S-0h
23	22	21	20	19	18	17	16
b0tcm0_bank0_enable_set	atcm0_bank1_enable_set	atcm0_bank0_enable_set	cpu0_ddata_ram7_enable_set	cpu0_ddata_ram6_enable_set	cpu0_ddata_ram5_enable_set	cpu0_ddata_ram4_enable_set	cpu0_ddata_ram3_enable_set
R/W1S-0h	R/W1S-0h	R/W1S-0h	R/W1S-0h	R/W1S-0h	R/W1S-0h	R/W1S-0h	R/W1S-0h
15	14	13	12	11	10	9	8
cpu0_ddata_ram2_enable_set	cpu0_ddata_ram1_enable_set	cpu0_ddata_ram0_enable_set	cpu0_ddirty_ram_enable_set	cpu0_dtag_ram3_enable_set	cpu0_dtag_ram2_enable_set	cpu0_dtag_ram1_enable_set	cpu0_dtag_ram0_enable_set
R/W1S-0h	R/W1S-0h	R/W1S-0h	R/W1S-0h	R/W1S-0h	R/W1S-0h	R/W1S-0h	R/W1S-0h
7	6	5	4	3	2	1	0
cpu0_idata_bank3_enable_set	cpu0_idata_bank2_enable_set	cpu0_idata_bank1_enable_set	cpu0_idata_bank0_enable_set	cpu0_itag_ram3_enable_set	cpu0_itag_ram2_enable_set	cpu0_itag_ram1_enable_set	cpu0_itag_ram0_enable_set
R/W1S-0h	R/W1S-0h	R/W1S-0h	R/W1S-0h	R/W1S-0h	R/W1S-0h	R/W1S-0h	R/W1S-0h

Table 11-1689. ded_enable_set_reg0 Register Field Descriptions

Bit	Field	Type	Reset	Description
31-28	RESERVED	R/W	X	
27	cpu0_ks_vim_ramecc_enable_set	R/W1S	0h	Interrupt Enable Set Register for cpu0_ks_vim_ramecc_pend
26	b1tcm0_bank1_enable_set	R/W1S	0h	Interrupt Enable Set Register for b1tcm0_bank1_pend
25	b1tcm0_bank0_enable_set	R/W1S	0h	Interrupt Enable Set Register for b1tcm0_bank0_pend
24	b0tcm0_bank1_enable_set	R/W1S	0h	Interrupt Enable Set Register for b0tcm0_bank1_pend
23	b0tcm0_bank0_enable_set	R/W1S	0h	Interrupt Enable Set Register for b0tcm0_bank0_pend
22	atcm0_bank1_enable_set	R/W1S	0h	Interrupt Enable Set Register for atcm0_bank1_pend
21	atcm0_bank0_enable_set	R/W1S	0h	Interrupt Enable Set Register for atcm0_bank0_pend
20	cpu0_ddata_ram7_enable_set	R/W1S	0h	Interrupt Enable Set Register for cpu0_ddata_ram7_pend
19	cpu0_ddata_ram6_enable_set	R/W1S	0h	Interrupt Enable Set Register for cpu0_ddata_ram6_pend
18	cpu0_ddata_ram5_enable_set	R/W1S	0h	Interrupt Enable Set Register for cpu0_ddata_ram5_pend
17	cpu0_ddata_ram4_enable_set	R/W1S	0h	Interrupt Enable Set Register for cpu0_ddata_ram4_pend
16	cpu0_ddata_ram3_enable_set	R/W1S	0h	Interrupt Enable Set Register for cpu0_ddata_ram3_pend
15	cpu0_ddata_ram2_enable_set	R/W1S	0h	Interrupt Enable Set Register for cpu0_ddata_ram2_pend

Copyright © 2025 Texas Instruments Incorporated

Table 11-1689. ded_enable_set_reg0 Register Field Descriptions (continued)

Bit	Field	Type	Reset	Description
14	cpu0_ddata_ram1_enable_set	R/W1S	0h	Interrupt Enable Set Register for cpu0_ddata_ram1_pend
13	cpu0_ddata_ram0_enable_set	R/W1S	0h	Interrupt Enable Set Register for cpu0_ddata_ram0_pend
12	cpu0_ddirty_ram_enable_set	R/W1S	0h	Interrupt Enable Set Register for cpu0_ddirty_ram_pend
11	cpu0_dtag_ram3_enable_set	R/W1S	0h	Interrupt Enable Set Register for cpu0_dtag_ram3_pend
10	cpu0_dtag_ram2_enable_set	R/W1S	0h	Interrupt Enable Set Register for cpu0_dtag_ram2_pend
9	cpu0_dtag_ram1_enable_set	R/W1S	0h	Interrupt Enable Set Register for cpu0_dtag_ram1_pend
8	cpu0_dtag_ram0_enable_set	R/W1S	0h	Interrupt Enable Set Register for cpu0_dtag_ram0_pend
7	cpu0_idata_bank3_enable_set	R/W1S	0h	Interrupt Enable Set Register for cpu0_idata_bank3_pend
6	cpu0_idata_bank2_enable_set	R/W1S	0h	Interrupt Enable Set Register for cpu0_idata_bank2_pend
5	cpu0_idata_bank1_enable_set	R/W1S	0h	Interrupt Enable Set Register for cpu0_idata_bank1_pend
4	cpu0_idata_bank0_enable_set	R/W1S	0h	Interrupt Enable Set Register for cpu0_idata_bank0_pend
3	cpu0_itag_ram3_enable_set	R/W1S	0h	Interrupt Enable Set Register for cpu0_itag_ram3_pend
2	cpu0_itag_ram2_enable_set	R/W1S	0h	Interrupt Enable Set Register for cpu0_itag_ram2_pend
1	cpu0_itag_ram1_enable_set	R/W1S	0h	Interrupt Enable Set Register for cpu0_itag_ram1_pend
0	cpu0_itag_ram0_enable_set	R/W1S	0h	Interrupt Enable Set Register for cpu0_itag_ram0_pend

Copyright © 2025 Texas Instruments Incorporated

11.8.5.2.18 ded_enable_clr_reg0 Register (Offset = 1C0h) [reset = X]

ded_enable_clr_reg0 is shown in Figure 11-476 and described in Table 11-1690.

Return to the Table 11-1672.

Interrupt Enable Clear Register 0

Figure 11-476. ded_enable_clr_reg0 Register

31	30	29	28	27	26	25	24
RESERVED				cpu0_ks_vim_ramecc_enable_clr	b1tcm0_bank1_enable_clr	b1tcm0_bank0_enable_clr	b0tcm0_bank1_enable_clr
R/W-X				R/W1C-0h	R/W1C-0h	R/W1C-0h	R/W1C-0h
23	22	21	20	19	18	17	16
b0tcm0_bank0_enable_clr	atcm0_bank1_enable_clr	atcm0_bank0_enable_clr	cpu0_ddata_ram7_enable_clr	cpu0_ddata_ram6_enable_clr	cpu0_ddata_ram5_enable_clr	cpu0_ddata_ram4_enable_clr	cpu0_ddata_ram3_enable_clr
R/W1C-0h	R/W1C-0h	R/W1C-0h	R/W1C-0h	R/W1C-0h	R/W1C-0h	R/W1C-0h	R/W1C-0h
15	14	13	12	11	10	9	8
cpu0_ddata_ram2_enable_clr	cpu0_ddata_ram1_enable_clr	cpu0_ddata_ram0_enable_clr	cpu0_ddirty_ram_enable_clr	cpu0_dtag_ram3_enable_clr	cpu0_dtag_ram2_enable_clr	cpu0_dtag_ram1_enable_clr	cpu0_dtag_ram0_enable_clr
R/W1C-0h	R/W1C-0h	R/W1C-0h	R/W1C-0h	R/W1C-0h	R/W1C-0h	R/W1C-0h	R/W1C-0h
7	6	5	4	3	2	1	0
cpu0_idata_bank3_enable_clr	cpu0_idata_bank2_enable_clr	cpu0_idata_bank1_enable_clr	cpu0_idata_bank0_enable_clr	cpu0_itag_ram3_enable_clr	cpu0_itag_ram2_enable_clr	cpu0_itag_ram1_enable_clr	cpu0_itag_ram0_enable_clr
R/W1C-0h	R/W1C-0h	R/W1C-0h	R/W1C-0h	R/W1C-0h	R/W1C-0h	R/W1C-0h	R/W1C-0h

Table 11-1690. ded_enable_clr_reg0 Register Field Descriptions

Bit	Field	Type	Reset	Description
31-28	RESERVED	R/W	X	
27	cpu0_ks_vim_ramecc_enable_clr	R/W1C	0h	Interrupt Enable Clear Register for cpu0_ks_vim_ramecc_pend
26	b1tcm0_bank1_enable_clr	R/W1C	0h	Interrupt Enable Clear Register for b1tcm0_bank1_pend
25	b1tcm0_bank0_enable_clr	R/W1C	0h	Interrupt Enable Clear Register for b1tcm0_bank0_pend
24	b0tcm0_bank1_enable_clr	R/W1C	0h	Interrupt Enable Clear Register for b0tcm0_bank1_pend
23	b0tcm0_bank0_enable_clr	R/W1C	0h	Interrupt Enable Clear Register for b0tcm0_bank0_pend
22	atcm0_bank1_enable_clr	R/W1C	0h	Interrupt Enable Clear Register for atcm0_bank1_pend
21	atcm0_bank0_enable_clr	R/W1C	0h	Interrupt Enable Clear Register for atcm0_bank0_pend
20	cpu0_ddata_ram7_enable_clr	R/W1C	0h	Interrupt Enable Clear Register for cpu0_ddata_ram7_pend
19	cpu0_ddata_ram6_enable_clr	R/W1C	0h	Interrupt Enable Clear Register for cpu0_ddata_ram6_pend
18	cpu0_ddata_ram5_enable_clr	R/W1C	0h	Interrupt Enable Clear Register for cpu0_ddata_ram5_pend
17	cpu0_ddata_ram4_enable_clr	R/W1C	0h	Interrupt Enable Clear Register for cpu0_ddata_ram4_pend
16	cpu0_ddata_ram3_enable_clr	R/W1C	0h	Interrupt Enable Clear Register for cpu0_ddata_ram3_pend
15	cpu0_ddata_ram2_enable_clr	R/W1C	0h	Interrupt Enable Clear Register for cpu0_ddata_ram2_pend
14	cpu0_ddata_ram1_enable_clr	R/W1C	0h	Interrupt Enable Clear Register for cpu0_ddata_ram1_pend

Copyright © 2025 Texas Instruments Incorporated

Table 11-1690. ded_enable_clr_reg0 Register Field Descriptions (continued)

Bit	Field	Type	Reset	Description
13	cpu0_ddata_ram0_enable_clr	R/W1C	0h	Interrupt Enable Clear Register for cpu0_ddata_ram0_pend
12	cpu0_ddirty_ram_enable_clr	R/W1C	0h	Interrupt Enable Clear Register for cpu0_ddirty_ram_pend
11	cpu0_dtag_ram3_enable_clr	R/W1C	0h	Interrupt Enable Clear Register for cpu0_dtag_ram3_pend
10	cpu0_dtag_ram2_enable_clr	R/W1C	0h	Interrupt Enable Clear Register for cpu0_dtag_ram2_pend
9	cpu0_dtag_ram1_enable_clr	R/W1C	0h	Interrupt Enable Clear Register for cpu0_dtag_ram1_pend
8	cpu0_dtag_ram0_enable_clr	R/W1C	0h	Interrupt Enable Clear Register for cpu0_dtag_ram0_pend
7	cpu0_idata_bank3_enable_clr	R/W1C	0h	Interrupt Enable Clear Register for cpu0_idata_bank3_pend
6	cpu0_idata_bank2_enable_clr	R/W1C	0h	Interrupt Enable Clear Register for cpu0_idata_bank2_pend
5	cpu0_idata_bank1_enable_clr	R/W1C	0h	Interrupt Enable Clear Register for cpu0_idata_bank1_pend
4	cpu0_idata_bank0_enable_clr	R/W1C	0h	Interrupt Enable Clear Register for cpu0_idata_bank0_pend
3	cpu0_itag_ram3_enable_clr	R/W1C	0h	Interrupt Enable Clear Register for cpu0_itag_ram3_pend
2	cpu0_itag_ram2_enable_clr	R/W1C	0h	Interrupt Enable Clear Register for cpu0_itag_ram2_pend
1	cpu0_itag_ram1_enable_clr	R/W1C	0h	Interrupt Enable Clear Register for cpu0_itag_ram1_pend
0	cpu0_itag_ram0_enable_clr	R/W1C	0h	Interrupt Enable Clear Register for cpu0_itag_ram0_pend

Copyright © 2025 Texas Instruments Incorporated

11.8.5.2.19 aggr_enable_set Register (Offset = 200h) [reset = X]

aggr_enable_set is shown in Figure 11-477 and described in Table 11-1691.

Return to the Table 11-1672.

AGGR interrupt enable set Register

Figure 11-477. aggr_enable_set Register

31	30	29	28	27	26	25	24
RESERVED							
R/W-X							
23	22	21	20	19	18	17	16
RESERVED							
R/W-X							
15	14	13	12	11	10	9	8
RESERVED							
R/W-X							
7	6	5	4	3	2	1	0
RESERVED						timeout	parity
R/W-X						R/W1S-0h	R/W1S-0h

Table 11-1691. aggr_enable_set Register Field Descriptions

Bit	Field	Type	Reset	Description
31-2	RESERVED	R/W	X	
1	timeout	R/W1S	0h	interrupt enable set for svbus timeout errors
0	parity	R/W1S	0h	interrupt enable set for parity errors

Copyright © 2025 Texas Instruments Incorporated

11.8.5.2.20 aggr_enable_clr Register (Offset = 204h) [reset = X]

aggr_enable_clr is shown in Figure 11-478 and described in Table 11-1692.

Return to the Table 11-1672.

AGGR interrupt enable clear Register

Figure 11-478. aggr_enable_clr Register

31	30	29	28	27	26	25	24
RESERVED							
R/W-X							
23	22	21	20	19	18	17	16
RESERVED							
R/W-X							
15	14	13	12	11	10	9	8
RESERVED							
R/W-X							
7	6	5	4	3	2	1	0
RESERVED						timeout	parity
R/W-X						R/W1C-0h	R/W1C-0h

Table 11-1692. aggr_enable_clr Register Field Descriptions

Bit	Field	Type	Reset	Description
31-2	RESERVED	R/W	X	
1	timeout	R/W1C	0h	interrupt enable clear for svbus timeout errors
0	parity	R/W1C	0h	interrupt enable clear for parity errors

Copyright © 2025 Texas Instruments Incorporated

11.8.5.2.21 aggr_status_set Register (Offset = 208h) [reset = X]

aggr_status_set is shown in Figure 11-479 and described in Table 11-1693.

Return to the Table 11-1672.

AGGR interrupt status set Register

Figure 11-479. aggr_status_set Register

31	30	29	28	27	26	25	24
RESERVED							
R/W-X							
23	22	21	20	19	18	17	16
RESERVED							
R/W-X							
15	14	13	12	11	10	9	8
RESERVED							
R/W-X							
7	6	5	4	3	2	1	0
RESERVED				timeout		parity	
R/W-X				R/Wincr-0h		R/Wincr-0h	

Table 11-1693. aggr_status_set Register Field Descriptions

Bit	Field	Type	Reset	Description
31-4	RESERVED	R/W	X	
3-2	timeout	R/Wincr	0h	interrupt status set for svbus timeout errors
1-0	parity	R/Wincr	0h	interrupt status set for parity errors

Copyright © 2025 Texas Instruments Incorporated

11.8.5.2.22 aggr_status_clr Register (Offset = 20Ch) [reset = X]

aggr_status_clr is shown in Figure 11-480 and described in Table 11-1694.

Return to the Table 11-1672.

AGGR interrupt status clear Register

Figure 11-480. aggr_status_clr Register

31	30	29	28	27	26	25	24
RESERVED							
R/W-X							
23	22	21	20	19	18	17	16
RESERVED							
R/W-X							
15	14	13	12	11	10	9	8
RESERVED							
R/W-X							
7	6	5	4	3	2	1	0
RESERVED				timeout		parity	
R/W-X				R/Wdecr-0h		R/Wdecr-0h	

Table 11-1694. aggr_status_clr Register Field Descriptions

Bit	Field	Type	Reset	Description
31-4	RESERVED	R/W	X	
3-2	timeout	R/Wdecr	0h	interrupt status clear for svbus timeout errors
1-0	parity	R/Wdecr	0h	interrupt status clear for parity errors

Copyright © 2025 Texas Instruments Incorporated

11.8.5.3 MSS_ECC_AGGB Registers

Table 11-1695 lists the MSS_ECC_AGGB registers. All register offset addresses not listed in Table 11-1695 should be considered as reserved locations and the register contents should not be modified.

Table 11-1695. MSS_ECC_AGGB Registers

Offset	Acronym	Register Name	Section
0h	rev	Aggregator Revision Register	Section 12.8.5.3.1
8h	vector	ECC Vector Register	Section 12.8.5.3.2
Ch	stat	Misc Status	Section 12.8.5.3.3
10h	wrap_rev	ECC Wrapper Revision Register	Section 12.8.5.3.4
14h	ctrl	ECC Control	Section 12.8.5.3.5
18h	err_ctrl1	ECC Error Control1 Register	Section 12.8.5.3.6
1Ch	err_ctrl2	ECC Error Control2 Register	Section 12.8.5.3.7
20h	err_stat1	ECC Error Status1 Register	Section 12.8.5.3.8
24h	err_stat2	ECC Error Status2 Register	Section 12.8.5.3.9
28h	err_stat3	ECC Error Status3 Register	Section 12.8.5.3.10
3Ch	sec_eoi_reg	EOI Register	Section 12.8.5.3.11
40h	sec_status_reg0	Interrupt Status Register 0	Section 12.8.5.3.12
80h	sec_enable_set_reg0	Interrupt Enable Set Register 0	Section 12.8.5.3.13
C0h	sec_enable_clr_reg0	Interrupt Enable Clear Register 0	Section 12.8.5.3.14
13Ch	ded_eoi_reg	EOI Register	Section 12.8.5.3.15
140h	ded_status_reg0	Interrupt Status Register 0	Section 12.8.5.3.16
180h	ded_enable_set_reg0	Interrupt Enable Set Register 0	Section 12.8.5.3.17
1C0h	ded_enable_clr_reg0	Interrupt Enable Clear Register 0	Section 12.8.5.3.18
200h	aggr_enable_set	AGGR interrupt enable set Register	Section 12.8.5.3.19
204h	aggr_enable_clr	AGGR interrupt enable clear Register	Section 12.8.5.3.20
208h	aggr_status_set	AGGR interrupt status set Register	Section 12.8.5.3.21
20Ch	aggr_status_clr	AGGR interrupt status clear Register	Section 12.8.5.3.22

Copyright © 2025 Texas Instruments Incorporated

11.8.5.3.1 rev Register (Offset = 0h) [reset = 66A0C200h]

rev is shown in Figure 11-481 and described in Table 11-1696.

Return to the Table 11-1695.

Revision parameters

Figure 11-481. rev Register

31	30	29	28	27	26	25	24	23	22	21	20	19	18	17	16
scheme		bu		module_id											
R-1h		R-2h		R-6A0h											
15	14	13	12	11	10	9	8	7	6	5	4	3	2	1	0
revrtl					revmaj			custom		revmin					
R-18h					R-2h			R-0h		R-0h					

Table 11-1696. rev Register Field Descriptions

Bit	Field	Type	Reset	Description
31-30	scheme	R	1h	Scheme
29-28	bu	R	2h	bu
27-16	module_id	R	6A0h	Module ID
15-11	revrtl	R	18h	RTL version
10-8	revmaj	R	2h	Major version
7-6	custom	R	0h	Custom version
5-0	revmin	R	0h	Minor version

Copyright © 2025 Texas Instruments Incorporated

11.8.5.3.2 vector Register (Offset = 8h) [reset = X]

vector is shown in Figure 11-482 and described in Table 11-1697.

Return to the Table 11-1695.

ECC Vector Register

Figure 11-482. vector Register

31	30	29	28	27	26	25	24
RESERVED							rd_svbus_done
R/W-X							R-0h
23	22	21	20	19	18	17	16
rd_svbus_address							
R/W-0h							
15	14	13	12	11	10	9	8
rd_svbus	RESERVED				ecc_vector		
R/W1S-0h	R/W-X				R/W-0h		
7	6	5	4	3	2	1	0
ecc_vector							
R/W-0h							

Table 11-1697. vector Register Field Descriptions

Bit	Field	Type	Reset	Description
31-25	RESERVED	R/W	X	
24	rd_svbus_done	R	0h	Status to indicate if read on serial VBUS is complete
23-16	rd_svbus_address	R/W	0h	Read address
15	rd_svbus	R/W1S	0h	Write 1 to trigger a read on the serial VBUS
14-11	RESERVED	R/W	X	
10-0	ecc_vector	R/W	0h	Value written to select the corresponding ECC RAM for control or status

Copyright © 2025 Texas Instruments Incorporated

11.8.5.3.3 stat Register (Offset = Ch) [reset = X]

stat is shown in Figure 11-483 and described in Table 11-1698.

Return to the Table 11-1695.

Misc Status

Figure 11-483. stat Register

31	30	29	28	27	26	25	24	23	22	21	20	19	18	17	16	15	14	13	12	11	10	9	8	7	6	5	4	3	2	1	0
RESERVED																					num_rams										
R-X																					R-1Ch										

Table 11-1698. stat Register Field Descriptions

Bit	Field	Type	Reset	Description
31-11	RESERVED	R	X	
10-0	num_rams	R	1Ch	Indicates the number of RAMS serviced by the ECC aggregator

Copyright © 2025 Texas Instruments Incorporated

11.8.5.3.4 wrap_rev Register (Offset = 10h) [reset = 66A40202h]

wrap_rev is shown in Figure 11-484 and described in Table 11-1699.

Return to the Table 11-1695.

Revision parameters

Figure 11-484. wrap_rev Register

31	30	29	28	27	26	25	24	23	22	21	20	19	18	17	16
scheme		bu		module_id											
R-1h		R-2h		R-6A4h											
15	14	13	12	11	10	9	8	7	6	5	4	3	2	1	0
revrtl					revmaj			custom		revmin					
R-0h					R-2h			R-0h		R-2h					

Table 11-1699. wrap_rev Register Field Descriptions

Bit	Field	Type	Reset	Description
31-30	scheme	R	1h	Scheme
29-28	bu	R	2h	bu
27-16	module_id	R	6A4h	Module ID
15-11	revrtl	R	0h	RTL version
10-8	revmaj	R	2h	Major version
7-6	custom	R	0h	Custom version
5-0	revmin	R	2h	Minor version

Copyright © 2025 Texas Instruments Incorporated

11.8.5.3.5 ctrl Register (Offset = 14h) [reset = X]

ctrl is shown in Figure 11-485 and described in Table 11-1700.

Return to the Table 11-1695.

ECC Control Register

Figure 11-485. ctrl Register

31	30	29	28	27	26	25	24
RESERVED							
R/W-X							
23	22	21	20	19	18	17	16
RESERVED							
R/W-X							
15	14	13	12	11	10	9	8
RESERVED							check_svbus_timeout
R/W-X							R/W-1h
7	6	5	4	3	2	1	0
check_parity	error_once	force_n_row	force_ded	force_sec	enable_rmw	ecc_check	ecc_enable
R/W-1h	R/W-0h	R/W-0h	R/W-0h	R/W-0h	R/W-1h	R/W-1h	R/W-1h

Table 11-1700. ctrl Register Field Descriptions

Bit	Field	Type	Reset	Description
31-9	RESERVED	R/W	X	
8	check_svbus_timeout	R/W	1h	check for svbus timeout errors
7	check_parity	R/W	1h	check for parity errors
6	error_once	R/W	0h	Force Error only once
5	force_n_row	R/W	0h	Force Error on any RAM read
4	force_ded	R/W	0h	Force Double Bit Error
3	force_sec	R/W	0h	Force Single Bit Error
2	enable_rmw	R/W	1h	Enable rmw
1	ecc_check	R/W	1h	Enable ECC check
0	ecc_enable	R/W	1h	Enable ECC

Copyright © 2025 Texas Instruments Incorporated

11.8.5.3.6 err_ctrl1 Register (Offset = 18h) [reset = 0h]

err_ctrl1 is shown in Figure 11-486 and described in Table 11-1701.

Return to the Table 11-1695.

ECC Error Control1 Register

Figure 11-486. err_ctrl1 Register

31	30	29	28	27	26	25	24	23	22	21	20	19	18	17	16	15	14	13	12	11	10	9	8	7	6	5	4	3	2	1	0
ecc_row																															
R/W-0h																															

Table 11-1701. err_ctrl1 Register Field Descriptions

Bit	Field	Type	Reset	Description
31-0	ecc_row	R/W	0h	Row address where single or double-bit error needs to be applied. This is ignored if force_n_row is set

Copyright © 2025 Texas Instruments Incorporated

11.8.5.3.7 err_ctrl2 Register (Offset = 1Ch) [reset = 0h]

err_ctrl2 is shown in Figure 11-487 and described in Table 11-1702.

Return to the Table 11-1695.

ECC Error Control2 Register

Figure 11-487. err_ctrl2 Register

31	30	29	28	27	26	25	24	23	22	21	20	19	18	17	16	15	14	13	12	11	10	9	8	7	6	5	4	3	2	1	0
ecc_bit2																ecc_bit1															
R/W-0h																R/W-0h															

Table 11-1702. err_ctrl2 Register Field Descriptions

Bit	Field	Type	Reset	Description
31-16	ecc_bit2	R/W	0h	Data bit that needs to be flipped if double bit error needs to be forced
15-0	ecc_bit1	R/W	0h	Data bit that needs to be flipped when force_sec is set

Copyright © 2025 Texas Instruments Incorporated

11.8.5.3.8 err_stat1 Register (Offset = 20h) [reset = 0h]

err_stat1 is shown in Figure 11-488 and described in Table 11-1703.

Return to the Table 11-1695.

ECC Error Status1 Register

Figure 11-488. err_stat1 Register

31	30	29	28	27	26	25	24
ecc_bit1							
R-0h							
23	22	21	20	19	18	17	16
ecc_bit1							
R-0h							
15	14	13	12	11	10	9	8
clr_ctrl_reg_err	clr_parity_err		clr_ecc_other	clr_ecc_ded		clr_ecc_sec	
R/W1C-0h	R/Wdecr-0h		R/W1C-0h	R/Wdecr-0h		R/Wdecr-0h	
7	6	5	4	3	2	1	0
ctr_reg_err	parity_err		ecc_other	ecc_ded		ecc_sec	
R/W1S-0h	R/W1S-0h		R/W1S-0h	R/Wincr-0h		R/Wincr-0h	

Table 11-1703. err_stat1 Register Field Descriptions

Bit	Field	Type	Reset	Description
31-16	ecc_bit1	R	0h	Data bit that corresponds to the single-bit error
15	clr_ctrl_reg_err	R/W1C	0h	Clear control reg error Error Status, you must also re write the contorl ergister itself to clear this
14-13	clr_parity_err	R/Wdecr	0h	Clear parity Error Status
12	clr_ecc_other	R/W1C	0h	Clear other Error Status
11-10	clr_ecc_ded	R/Wdecr	0h	Clear Double Bit Error Status
9-8	clr_ecc_sec	R/Wdecr	0h	Clear Single Bit Error Status
7	ctr_reg_err	R/W1S	0h	control register error pending, Level interrupt
6-5	parity_err	R/W1S	0h	Level parity error Error Status
4	ecc_other	R/W1S	0h	successive single-bit errors have occurred while a writeback is still pending, Level interrupt
3-2	ecc_ded	R/Wincr	0h	Level Double Bit Error Status
1-0	ecc_sec	R/Wincr	0h	Level Single Bit Error Status

Copyright © 2025 Texas Instruments Incorporated

11.8.5.3.9 err_stat2 Register (Offset = 24h) [reset = 0h]

err_stat2 is shown in Figure 11-489 and described in Table 11-1704.

Return to the Table 11-1695.

ECC Error Status2 Register

Figure 11-489. err_stat2 Register

31	30	29	28	27	26	25	24	23	22	21	20	19	18	17	16	15	14	13	12	11	10	9	8	7	6	5	4	3	2	1	0
ecc_row																															
R-0h																															

Table 11-1704. err_stat2 Register Field Descriptions

Bit	Field	Type	Reset	Description
31-0	ecc_row	R	0h	Row address where the single or double-bit error has occurred

Copyright © 2025 Texas Instruments Incorporated

11.8.5.3.10 err_stat3 Register (Offset = 28h) [reset = X]

err_stat3 is shown in Figure 11-490 and described in Table 11-1705.

Return to the Table 11-1695.

ECC Error Status3 Register

Figure 11-490. err_stat3 Register

31	30	29	28	27	26	25	24
RESERVED							
R/W-X							
23	22	21	20	19	18	17	16
RESERVED							
R/W-X							
15	14	13	12	11	10	9	8
RESERVED						clr_svbus_timeout_err	RESERVED
R/W-X						R/W1C-0h	R/W-X
7	6	5	4	3	2	1	0
RESERVED						svbus_timeout_err	wb_pend
R/W-X						R/W1S-0h	R-0h

Table 11-1705. err_stat3 Register Field Descriptions

Bit	Field	Type	Reset	Description
31-10	RESERVED	R/W	X	
9	clr_svbus_timeout_err	R/W1C	0h	Clear svbus timeout Error Status
8-2	RESERVED	R/W	X	
1	svbus_timeout_err	R/W1S	0h	Level svbus timeout error Error Status
0	wb_pend	R	0h	delayed write back pending Status

Copyright © 2025 Texas Instruments Incorporated

11.8.5.3.11 sec_eoi_reg Register (Offset = 3Ch) [reset = X]

sec_eoi_reg is shown in Figure 11-491 and described in Table 11-1706.

Return to the Table 11-1695.

EOI Register

Figure 11-491. sec_eoi_reg Register

31	30	29	28	27	26	25	24
RESERVED							
R/W-X							
23	22	21	20	19	18	17	16
RESERVED							
R/W-X							
15	14	13	12	11	10	9	8
RESERVED							
R/W-X							
7	6	5	4	3	2	1	0
RESERVED							eoi_wr
R/W-X							R/W1S-0h

Table 11-1706. sec_eoi_reg Register Field Descriptions

Bit	Field	Type	Reset	Description
31-1	RESERVED	R/W	X	
0	eoi_wr	R/W1S	0h	EOI Register

Copyright © 2025 Texas Instruments Incorporated

11.8.5.3.12 sec_status_reg0 Register (Offset = 40h) [reset = X]

sec_status_reg0 is shown in Figure 11-492 and described in Table 11-1707.

Return to the Table 11-1695.

Interrupt Status Register 0

Figure 11-492. sec_status_reg0 Register

31	30	29	28	27	26	25	24
RESERVED				cpu1_ks_vim_ramecc_pend	b1tcm1_bank1_pend	b1tcm1_bank0_pend	b0tcm1_bank1_pend
R/W-X				R/W1S-0h	R/W1S-0h	R/W1S-0h	R/W1S-0h
23	22	21	20	19	18	17	16
b0tcm1_bank0_pend	atcm1_bank1_pend	atcm1_bank0_pend	cpu1_ddata_ram7_pend	cpu1_ddata_ram6_pend	cpu1_ddata_ram5_pend	cpu1_ddata_ram4_pend	cpu1_ddata_ram3_pend
R/W1S-0h	R/W1S-0h	R/W1S-0h	R/W1S-0h	R/W1S-0h	R/W1S-0h	R/W1S-0h	R/W1S-0h
15	14	13	12	11	10	9	8
cpu1_ddata_ram2_pend	cpu1_ddata_ram1_pend	cpu1_ddata_ram0_pend	cpu1_ddirty_ram_pend	cpu1_dtag_ram3_pend	cpu1_dtag_ram2_pend	cpu1_dtag_ram1_pend	cpu1_dtag_ram0_pend
R/W1S-0h	R/W1S-0h	R/W1S-0h	R/W1S-0h	R/W1S-0h	R/W1S-0h	R/W1S-0h	R/W1S-0h
7	6	5	4	3	2	1	0
cpu1_idata_bank3_pend	cpu1_idata_bank2_pend	cpu1_idata_bank1_pend	cpu1_idata_bank0_pend	cpu1_itag_ram3_pend	cpu1_itag_ram2_pend	cpu1_itag_ram1_pend	cpu1_itag_ram0_pend
R/W1S-0h	R/W1S-0h	R/W1S-0h	R/W1S-0h	R/W1S-0h	R/W1S-0h	R/W1S-0h	R/W1S-0h

Table 11-1707. sec_status_reg0 Register Field Descriptions

Bit	Field	Type	Reset	Description
31-28	RESERVED	R/W	X	
27	cpu1_ks_vim_ramecc_pend	R/W1S	0h	Interrupt Pending Status for cpu1_ks_vim_ramecc_pend
26	b1tcm1_bank1_pend	R/W1S	0h	Interrupt Pending Status for b1tcm1_bank1_pend
25	b1tcm1_bank0_pend	R/W1S	0h	Interrupt Pending Status for b1tcm1_bank0_pend
24	b0tcm1_bank1_pend	R/W1S	0h	Interrupt Pending Status for b0tcm1_bank1_pend
23	b0tcm1_bank0_pend	R/W1S	0h	Interrupt Pending Status for b0tcm1_bank0_pend
22	atcm1_bank1_pend	R/W1S	0h	Interrupt Pending Status for atcm1_bank1_pend
21	atcm1_bank0_pend	R/W1S	0h	Interrupt Pending Status for atcm1_bank0_pend
20	cpu1_ddata_ram7_pend	R/W1S	0h	Interrupt Pending Status for cpu1_ddata_ram7_pend
19	cpu1_ddata_ram6_pend	R/W1S	0h	Interrupt Pending Status for cpu1_ddata_ram6_pend
18	cpu1_ddata_ram5_pend	R/W1S	0h	Interrupt Pending Status for cpu1_ddata_ram5_pend
17	cpu1_ddata_ram4_pend	R/W1S	0h	Interrupt Pending Status for cpu1_ddata_ram4_pend
16	cpu1_ddata_ram3_pend	R/W1S	0h	Interrupt Pending Status for cpu1_ddata_ram3_pend
15	cpu1_ddata_ram2_pend	R/W1S	0h	Interrupt Pending Status for cpu1_ddata_ram2_pend
14	cpu1_ddata_ram1_pend	R/W1S	0h	Interrupt Pending Status for cpu1_ddata_ram1_pend
13	cpu1_ddata_ram0_pend	R/W1S	0h	Interrupt Pending Status for cpu1_ddata_ram0_pend
12	cpu1_ddirty_ram_pend	R/W1S	0h	Interrupt Pending Status for cpu1_ddirty_ram_pend
11	cpu1_dtag_ram3_pend	R/W1S	0h	Interrupt Pending Status for cpu1_dtag_ram3_pend
10	cpu1_dtag_ram2_pend	R/W1S	0h	Interrupt Pending Status for cpu1_dtag_ram2_pend

Copyright © 2025 Texas Instruments Incorporated

Table 11-1707. sec_status_reg0 Register Field Descriptions (continued)

Bit	Field	Type	Reset	Description
9	cpu1_dtag_ram1_pend	R/W1S	0h	Interrupt Pending Status for cpu1_dtag_ram1_pend
8	cpu1_dtag_ram0_pend	R/W1S	0h	Interrupt Pending Status for cpu1_dtag_ram0_pend
7	cpu1_idata_bank3_pend	R/W1S	0h	Interrupt Pending Status for cpu1_idata_bank3_pend
6	cpu1_idata_bank2_pend	R/W1S	0h	Interrupt Pending Status for cpu1_idata_bank2_pend
5	cpu1_idata_bank1_pend	R/W1S	0h	Interrupt Pending Status for cpu1_idata_bank1_pend
4	cpu1_idata_bank0_pend	R/W1S	0h	Interrupt Pending Status for cpu1_idata_bank0_pend
3	cpu1_itag_ram3_pend	R/W1S	0h	Interrupt Pending Status for cpu1_itag_ram3_pend
2	cpu1_itag_ram2_pend	R/W1S	0h	Interrupt Pending Status for cpu1_itag_ram2_pend
1	cpu1_itag_ram1_pend	R/W1S	0h	Interrupt Pending Status for cpu1_itag_ram1_pend
0	cpu1_itag_ram0_pend	R/W1S	0h	Interrupt Pending Status for cpu1_itag_ram0_pend

Copyright © 2025 Texas Instruments Incorporated

11.8.5.3.13 sec_enable_set_reg0 Register (Offset = 80h) [reset = X]

sec_enable_set_reg0 is shown in Figure 11-493 and described in Table 11-1708.

Return to the Table 11-1695.

Interrupt Enable Set Register 0

Figure 11-493. sec_enable_set_reg0 Register

31	30	29	28	27	26	25	24
RESERVED				cpu1_ks_vim_ramecc_enable_set	b1tcm1_bank1_enable_set	b1tcm1_bank0_enable_set	b0tcm1_bank1_enable_set
R/W-X				R/W1S-0h	R/W1S-0h	R/W1S-0h	R/W1S-0h
23	22	21	20	19	18	17	16
b0tcm1_bank0_enable_set	atcm1_bank1_enable_set	atcm1_bank0_enable_set	cpu1_ddata_ram7_enable_set	cpu1_ddata_ram6_enable_set	cpu1_ddata_ram5_enable_set	cpu1_ddata_ram4_enable_set	cpu1_ddata_ram3_enable_set
R/W1S-0h	R/W1S-0h	R/W1S-0h	R/W1S-0h	R/W1S-0h	R/W1S-0h	R/W1S-0h	R/W1S-0h
15	14	13	12	11	10	9	8
cpu1_ddata_ram2_enable_set	cpu1_ddata_ram1_enable_set	cpu1_ddata_ram0_enable_set	cpu1_ddirty_ram_enable_set	cpu1_dtag_ram3_enable_set	cpu1_dtag_ram2_enable_set	cpu1_dtag_ram1_enable_set	cpu1_dtag_ram0_enable_set
R/W1S-0h	R/W1S-0h	R/W1S-0h	R/W1S-0h	R/W1S-0h	R/W1S-0h	R/W1S-0h	R/W1S-0h
7	6	5	4	3	2	1	0
cpu1_idata_bank3_enable_set	cpu1_idata_bank2_enable_set	cpu1_idata_bank1_enable_set	cpu1_idata_bank0_enable_set	cpu1_itag_ram3_enable_set	cpu1_itag_ram2_enable_set	cpu1_itag_ram1_enable_set	cpu1_itag_ram0_enable_set
R/W1S-0h	R/W1S-0h	R/W1S-0h	R/W1S-0h	R/W1S-0h	R/W1S-0h	R/W1S-0h	R/W1S-0h

Table 11-1708. sec_enable_set_reg0 Register Field Descriptions

Bit	Field	Type	Reset	Description
31-28	RESERVED	R/W	X	
27	cpu1_ks_vim_ramecc_enable_set	R/W1S	0h	Interrupt Enable Set Register for cpu1_ks_vim_ramecc_pend
26	b1tcm1_bank1_enable_set	R/W1S	0h	Interrupt Enable Set Register for b1tcm1_bank1_pend
25	b1tcm1_bank0_enable_set	R/W1S	0h	Interrupt Enable Set Register for b1tcm1_bank0_pend
24	b0tcm1_bank1_enable_set	R/W1S	0h	Interrupt Enable Set Register for b0tcm1_bank1_pend
23	b0tcm1_bank0_enable_set	R/W1S	0h	Interrupt Enable Set Register for b0tcm1_bank0_pend
22	atcm1_bank1_enable_set	R/W1S	0h	Interrupt Enable Set Register for atcm1_bank1_pend
21	atcm1_bank0_enable_set	R/W1S	0h	Interrupt Enable Set Register for atcm1_bank0_pend
20	cpu1_ddata_ram7_enable_set	R/W1S	0h	Interrupt Enable Set Register for cpu1_ddata_ram7_pend
19	cpu1_ddata_ram6_enable_set	R/W1S	0h	Interrupt Enable Set Register for cpu1_ddata_ram6_pend
18	cpu1_ddata_ram5_enable_set	R/W1S	0h	Interrupt Enable Set Register for cpu1_ddata_ram5_pend
17	cpu1_ddata_ram4_enable_set	R/W1S	0h	Interrupt Enable Set Register for cpu1_ddata_ram4_pend
16	cpu1_ddata_ram3_enable_set	R/W1S	0h	Interrupt Enable Set Register for cpu1_ddata_ram3_pend
15	cpu1_ddata_ram2_enable_set	R/W1S	0h	Interrupt Enable Set Register for cpu1_ddata_ram2_pend

Copyright © 2025 Texas Instruments Incorporated

Table 11-1708. sec_enable_set_reg0 Register Field Descriptions (continued)

Bit	Field	Type	Reset	Description
14	cpu1_ddata_ram1_enable_set	R/W1S	0h	Interrupt Enable Set Register for cpu1_ddata_ram1_pend
13	cpu1_ddata_ram0_enable_set	R/W1S	0h	Interrupt Enable Set Register for cpu1_ddata_ram0_pend
12	cpu1_ddirty_ram_enable_set	R/W1S	0h	Interrupt Enable Set Register for cpu1_ddirty_ram_pend
11	cpu1_dtag_ram3_enable_set	R/W1S	0h	Interrupt Enable Set Register for cpu1_dtag_ram3_pend
10	cpu1_dtag_ram2_enable_set	R/W1S	0h	Interrupt Enable Set Register for cpu1_dtag_ram2_pend
9	cpu1_dtag_ram1_enable_set	R/W1S	0h	Interrupt Enable Set Register for cpu1_dtag_ram1_pend
8	cpu1_dtag_ram0_enable_set	R/W1S	0h	Interrupt Enable Set Register for cpu1_dtag_ram0_pend
7	cpu1_idata_bank3_enable_set	R/W1S	0h	Interrupt Enable Set Register for cpu1_idata_bank3_pend
6	cpu1_idata_bank2_enable_set	R/W1S	0h	Interrupt Enable Set Register for cpu1_idata_bank2_pend
5	cpu1_idata_bank1_enable_set	R/W1S	0h	Interrupt Enable Set Register for cpu1_idata_bank1_pend
4	cpu1_idata_bank0_enable_set	R/W1S	0h	Interrupt Enable Set Register for cpu1_idata_bank0_pend
3	cpu1_itag_ram3_enable_set	R/W1S	0h	Interrupt Enable Set Register for cpu1_itag_ram3_pend
2	cpu1_itag_ram2_enable_set	R/W1S	0h	Interrupt Enable Set Register for cpu1_itag_ram2_pend
1	cpu1_itag_ram1_enable_set	R/W1S	0h	Interrupt Enable Set Register for cpu1_itag_ram1_pend
0	cpu1_itag_ram0_enable_set	R/W1S	0h	Interrupt Enable Set Register for cpu1_itag_ram0_pend

Copyright © 2025 Texas Instruments Incorporated

11.8.5.3.14 sec_enable_clr_reg0 Register (Offset = C0h) [reset = X]

sec_enable_clr_reg0 is shown in Figure 11-494 and described in Table 11-1709.

Return to the Table 11-1695.

Interrupt Enable Clear Register 0

Figure 11-494. sec_enable_clr_reg0 Register

31	30	29	28	27	26	25	24
RESERVED				cpu1_ks_vim_ramecc_enable_clr	b1tcm1_bank1_enable_clr	b1tcm1_bank0_enable_clr	b0tcm1_bank1_enable_clr
R/W-X				R/W1C-0h	R/W1C-0h	R/W1C-0h	R/W1C-0h
23	22	21	20	19	18	17	16
b0tcm1_bank0_enable_clr	atcm1_bank1_enable_clr	atcm1_bank0_enable_clr	cpu1_ddata_ram7_enable_clr	cpu1_ddata_ram6_enable_clr	cpu1_ddata_ram5_enable_clr	cpu1_ddata_ram4_enable_clr	cpu1_ddata_ram3_enable_clr
R/W1C-0h	R/W1C-0h	R/W1C-0h	R/W1C-0h	R/W1C-0h	R/W1C-0h	R/W1C-0h	R/W1C-0h
15	14	13	12	11	10	9	8
cpu1_ddata_ram2_enable_clr	cpu1_ddata_ram1_enable_clr	cpu1_ddata_ram0_enable_clr	cpu1_ddirty_ram_enable_clr	cpu1_dtag_ram3_enable_clr	cpu1_dtag_ram2_enable_clr	cpu1_dtag_ram1_enable_clr	cpu1_dtag_ram0_enable_clr
R/W1C-0h	R/W1C-0h	R/W1C-0h	R/W1C-0h	R/W1C-0h	R/W1C-0h	R/W1C-0h	R/W1C-0h
7	6	5	4	3	2	1	0
cpu1_idata_bank3_enable_clr	cpu1_idata_bank2_enable_clr	cpu1_idata_bank1_enable_clr	cpu1_idata_bank0_enable_clr	cpu1_itag_ram3_enable_clr	cpu1_itag_ram2_enable_clr	cpu1_itag_ram1_enable_clr	cpu1_itag_ram0_enable_clr
R/W1C-0h	R/W1C-0h	R/W1C-0h	R/W1C-0h	R/W1C-0h	R/W1C-0h	R/W1C-0h	R/W1C-0h

Table 11-1709. sec_enable_clr_reg0 Register Field Descriptions

Bit	Field	Type	Reset	Description
31-28	RESERVED	R/W	X	
27	cpu1_ks_vim_ramecc_enable_clr	R/W1C	0h	Interrupt Enable Clear Register for cpu1_ks_vim_ramecc_pend
26	b1tcm1_bank1_enable_clr	R/W1C	0h	Interrupt Enable Clear Register for b1tcm1_bank1_pend
25	b1tcm1_bank0_enable_clr	R/W1C	0h	Interrupt Enable Clear Register for b1tcm1_bank0_pend
24	b0tcm1_bank1_enable_clr	R/W1C	0h	Interrupt Enable Clear Register for b0tcm1_bank1_pend
23	b0tcm1_bank0_enable_clr	R/W1C	0h	Interrupt Enable Clear Register for b0tcm1_bank0_pend
22	atcm1_bank1_enable_clr	R/W1C	0h	Interrupt Enable Clear Register for atcm1_bank1_pend
21	atcm1_bank0_enable_clr	R/W1C	0h	Interrupt Enable Clear Register for atcm1_bank0_pend
20	cpu1_ddata_ram7_enable_clr	R/W1C	0h	Interrupt Enable Clear Register for cpu1_ddata_ram7_pend
19	cpu1_ddata_ram6_enable_clr	R/W1C	0h	Interrupt Enable Clear Register for cpu1_ddata_ram6_pend
18	cpu1_ddata_ram5_enable_clr	R/W1C	0h	Interrupt Enable Clear Register for cpu1_ddata_ram5_pend
17	cpu1_ddata_ram4_enable_clr	R/W1C	0h	Interrupt Enable Clear Register for cpu1_ddata_ram4_pend
16	cpu1_ddata_ram3_enable_clr	R/W1C	0h	Interrupt Enable Clear Register for cpu1_ddata_ram3_pend
15	cpu1_ddata_ram2_enable_clr	R/W1C	0h	Interrupt Enable Clear Register for cpu1_ddata_ram2_pend
14	cpu1_ddata_ram1_enable_clr	R/W1C	0h	Interrupt Enable Clear Register for cpu1_ddata_ram1_pend

Copyright © 2025 Texas Instruments Incorporated

Table 11-1709. sec_enable_clr_reg0 Register Field Descriptions (continued)

Bit	Field	Type	Reset	Description
13	cpu1_ddata_ram0_enable_clr	R/W1C	0h	Interrupt Enable Clear Register for cpu1_ddata_ram0_pend
12	cpu1_ddirty_ram_enable_clr	R/W1C	0h	Interrupt Enable Clear Register for cpu1_ddirty_ram_pend
11	cpu1_dtag_ram3_enable_clr	R/W1C	0h	Interrupt Enable Clear Register for cpu1_dtag_ram3_pend
10	cpu1_dtag_ram2_enable_clr	R/W1C	0h	Interrupt Enable Clear Register for cpu1_dtag_ram2_pend
9	cpu1_dtag_ram1_enable_clr	R/W1C	0h	Interrupt Enable Clear Register for cpu1_dtag_ram1_pend
8	cpu1_dtag_ram0_enable_clr	R/W1C	0h	Interrupt Enable Clear Register for cpu1_dtag_ram0_pend
7	cpu1_idata_bank3_enable_clr	R/W1C	0h	Interrupt Enable Clear Register for cpu1_idata_bank3_pend
6	cpu1_idata_bank2_enable_clr	R/W1C	0h	Interrupt Enable Clear Register for cpu1_idata_bank2_pend
5	cpu1_idata_bank1_enable_clr	R/W1C	0h	Interrupt Enable Clear Register for cpu1_idata_bank1_pend
4	cpu1_idata_bank0_enable_clr	R/W1C	0h	Interrupt Enable Clear Register for cpu1_idata_bank0_pend
3	cpu1_itag_ram3_enable_clr	R/W1C	0h	Interrupt Enable Clear Register for cpu1_itag_ram3_pend
2	cpu1_itag_ram2_enable_clr	R/W1C	0h	Interrupt Enable Clear Register for cpu1_itag_ram2_pend
1	cpu1_itag_ram1_enable_clr	R/W1C	0h	Interrupt Enable Clear Register for cpu1_itag_ram1_pend
0	cpu1_itag_ram0_enable_clr	R/W1C	0h	Interrupt Enable Clear Register for cpu1_itag_ram0_pend

Copyright © 2025 Texas Instruments Incorporated

11.8.5.3.15 ded_eoi_reg Register (Offset = 13Ch) [reset = X]

ded_eoi_reg is shown in Figure 11-495 and described in Table 11-1710.

Return to the Table 11-1695.

EOI Register

Figure 11-495. ded_eoi_reg Register

31	30	29	28	27	26	25	24
RESERVED							
R/W-X							
23	22	21	20	19	18	17	16
RESERVED							
R/W-X							
15	14	13	12	11	10	9	8
RESERVED							
R/W-X							
7	6	5	4	3	2	1	0
RESERVED							eoi_wr
R/W-X							R/W1S-0h

Table 11-1710. ded_eoi_reg Register Field Descriptions

Bit	Field	Type	Reset	Description
31-1	RESERVED	R/W	X	
0	eoi_wr	R/W1S	0h	EOI Register

Copyright © 2025 Texas Instruments Incorporated

11.8.5.3.16 ded_status_reg0 Register (Offset = 140h) [reset = X]

ded_status_reg0 is shown in Figure 11-496 and described in Table 11-1711.

Return to the Table 11-1695.

Interrupt Status Register 0

Figure 11-496. ded_status_reg0 Register

31	30	29	28	27	26	25	24
RESERVED				cpu1_ks_vim_ramecc_pend	b1tcm1_bank1_pend	b1tcm1_bank0_pend	b0tcm1_bank1_pend
R/W-X				R/W1S-0h	R/W1S-0h	R/W1S-0h	R/W1S-0h
23	22	21	20	19	18	17	16
b0tcm1_bank0_pend	atcm1_bank1_pend	atcm1_bank0_pend	cpu1_ddata_ram7_pend	cpu1_ddata_ram6_pend	cpu1_ddata_ram5_pend	cpu1_ddata_ram4_pend	cpu1_ddata_ram3_pend
R/W1S-0h	R/W1S-0h	R/W1S-0h	R/W1S-0h	R/W1S-0h	R/W1S-0h	R/W1S-0h	R/W1S-0h
15	14	13	12	11	10	9	8
cpu1_ddata_ram2_pend	cpu1_ddata_ram1_pend	cpu1_ddata_ram0_pend	cpu1_ddirty_ram_pend	cpu1_dtag_ram3_pend	cpu1_dtag_ram2_pend	cpu1_dtag_ram1_pend	cpu1_dtag_ram0_pend
R/W1S-0h	R/W1S-0h	R/W1S-0h	R/W1S-0h	R/W1S-0h	R/W1S-0h	R/W1S-0h	R/W1S-0h
7	6	5	4	3	2	1	0
cpu1_idata_bank3_pend	cpu1_idata_bank2_pend	cpu1_idata_bank1_pend	cpu1_idata_bank0_pend	cpu1_itag_ram3_pend	cpu1_itag_ram2_pend	cpu1_itag_ram1_pend	cpu1_itag_ram0_pend
R/W1S-0h	R/W1S-0h	R/W1S-0h	R/W1S-0h	R/W1S-0h	R/W1S-0h	R/W1S-0h	R/W1S-0h

Table 11-1711. ded_status_reg0 Register Field Descriptions

Bit	Field	Type	Reset	Description
31-28	RESERVED	R/W	X	
27	cpu1_ks_vim_ramecc_pend	R/W1S	0h	Interrupt Pending Status for cpu1_ks_vim_ramecc_pend
26	b1tcm1_bank1_pend	R/W1S	0h	Interrupt Pending Status for b1tcm1_bank1_pend
25	b1tcm1_bank0_pend	R/W1S	0h	Interrupt Pending Status for b1tcm1_bank0_pend
24	b0tcm1_bank1_pend	R/W1S	0h	Interrupt Pending Status for b0tcm1_bank1_pend
23	b0tcm1_bank0_pend	R/W1S	0h	Interrupt Pending Status for b0tcm1_bank0_pend
22	atcm1_bank1_pend	R/W1S	0h	Interrupt Pending Status for atcm1_bank1_pend
21	atcm1_bank0_pend	R/W1S	0h	Interrupt Pending Status for atcm1_bank0_pend
20	cpu1_ddata_ram7_pend	R/W1S	0h	Interrupt Pending Status for cpu1_ddata_ram7_pend
19	cpu1_ddata_ram6_pend	R/W1S	0h	Interrupt Pending Status for cpu1_ddata_ram6_pend
18	cpu1_ddata_ram5_pend	R/W1S	0h	Interrupt Pending Status for cpu1_ddata_ram5_pend
17	cpu1_ddata_ram4_pend	R/W1S	0h	Interrupt Pending Status for cpu1_ddata_ram4_pend
16	cpu1_ddata_ram3_pend	R/W1S	0h	Interrupt Pending Status for cpu1_ddata_ram3_pend
15	cpu1_ddata_ram2_pend	R/W1S	0h	Interrupt Pending Status for cpu1_ddata_ram2_pend
14	cpu1_ddata_ram1_pend	R/W1S	0h	Interrupt Pending Status for cpu1_ddata_ram1_pend
13	cpu1_ddata_ram0_pend	R/W1S	0h	Interrupt Pending Status for cpu1_ddata_ram0_pend
12	cpu1_ddirty_ram_pend	R/W1S	0h	Interrupt Pending Status for cpu1_ddirty_ram_pend
11	cpu1_dtag_ram3_pend	R/W1S	0h	Interrupt Pending Status for cpu1_dtag_ram3_pend
10	cpu1_dtag_ram2_pend	R/W1S	0h	Interrupt Pending Status for cpu1_dtag_ram2_pend

Copyright © 2025 Texas Instruments Incorporated

Table 11-1711. ded_status_reg0 Register Field Descriptions (continued)

Bit	Field	Type	Reset	Description
9	cpu1_dtag_ram1_pend	R/W1S	0h	Interrupt Pending Status for cpu1_dtag_ram1_pend
8	cpu1_dtag_ram0_pend	R/W1S	0h	Interrupt Pending Status for cpu1_dtag_ram0_pend
7	cpu1_idata_bank3_pend	R/W1S	0h	Interrupt Pending Status for cpu1_idata_bank3_pend
6	cpu1_idata_bank2_pend	R/W1S	0h	Interrupt Pending Status for cpu1_idata_bank2_pend
5	cpu1_idata_bank1_pend	R/W1S	0h	Interrupt Pending Status for cpu1_idata_bank1_pend
4	cpu1_idata_bank0_pend	R/W1S	0h	Interrupt Pending Status for cpu1_idata_bank0_pend
3	cpu1_itag_ram3_pend	R/W1S	0h	Interrupt Pending Status for cpu1_itag_ram3_pend
2	cpu1_itag_ram2_pend	R/W1S	0h	Interrupt Pending Status for cpu1_itag_ram2_pend
1	cpu1_itag_ram1_pend	R/W1S	0h	Interrupt Pending Status for cpu1_itag_ram1_pend
0	cpu1_itag_ram0_pend	R/W1S	0h	Interrupt Pending Status for cpu1_itag_ram0_pend

Copyright © 2025 Texas Instruments Incorporated

11.8.5.3.17 ded_enable_set_reg0 Register (Offset = 180h) [reset = X]

ded_enable_set_reg0 is shown in Figure 11-497 and described in Table 11-1712.

Return to the Table 11-1695.

Interrupt Enable Set Register 0

Figure 11-497. ded_enable_set_reg0 Register

31	30	29	28	27	26	25	24
RESERVED				cpu1_ks_vim_ramecc_enable_set	b1tcm1_bank1_enable_set	b1tcm1_bank0_enable_set	b0tcm1_bank1_enable_set
R/W-X				R/W1S-0h	R/W1S-0h	R/W1S-0h	R/W1S-0h
23	22	21	20	19	18	17	16
b0tcm1_bank0_enable_set	atcm1_bank1_enable_set	atcm1_bank0_enable_set	cpu1_ddata_ram7_enable_set	cpu1_ddata_ram6_enable_set	cpu1_ddata_ram5_enable_set	cpu1_ddata_ram4_enable_set	cpu1_ddata_ram3_enable_set
R/W1S-0h	R/W1S-0h	R/W1S-0h	R/W1S-0h	R/W1S-0h	R/W1S-0h	R/W1S-0h	R/W1S-0h
15	14	13	12	11	10	9	8
cpu1_ddata_ram2_enable_set	cpu1_ddata_ram1_enable_set	cpu1_ddata_ram0_enable_set	cpu1_ddirty_ram_enable_set	cpu1_dtag_ram3_enable_set	cpu1_dtag_ram2_enable_set	cpu1_dtag_ram1_enable_set	cpu1_dtag_ram0_enable_set
R/W1S-0h	R/W1S-0h	R/W1S-0h	R/W1S-0h	R/W1S-0h	R/W1S-0h	R/W1S-0h	R/W1S-0h
7	6	5	4	3	2	1	0
cpu1_idata_bank3_enable_set	cpu1_idata_bank2_enable_set	cpu1_idata_bank1_enable_set	cpu1_idata_bank0_enable_set	cpu1_itag_ram3_enable_set	cpu1_itag_ram2_enable_set	cpu1_itag_ram1_enable_set	cpu1_itag_ram0_enable_set
R/W1S-0h	R/W1S-0h	R/W1S-0h	R/W1S-0h	R/W1S-0h	R/W1S-0h	R/W1S-0h	R/W1S-0h

Table 11-1712. ded_enable_set_reg0 Register Field Descriptions

Bit	Field	Type	Reset	Description
31-28	RESERVED	R/W	X	
27	cpu1_ks_vim_ramecc_enable_set	R/W1S	0h	Interrupt Enable Set Register for cpu1_ks_vim_ramecc_pend
26	b1tcm1_bank1_enable_set	R/W1S	0h	Interrupt Enable Set Register for b1tcm1_bank1_pend
25	b1tcm1_bank0_enable_set	R/W1S	0h	Interrupt Enable Set Register for b1tcm1_bank0_pend
24	b0tcm1_bank1_enable_set	R/W1S	0h	Interrupt Enable Set Register for b0tcm1_bank1_pend
23	b0tcm1_bank0_enable_set	R/W1S	0h	Interrupt Enable Set Register for b0tcm1_bank0_pend
22	atcm1_bank1_enable_set	R/W1S	0h	Interrupt Enable Set Register for atcm1_bank1_pend
21	atcm1_bank0_enable_set	R/W1S	0h	Interrupt Enable Set Register for atcm1_bank0_pend
20	cpu1_ddata_ram7_enable_set	R/W1S	0h	Interrupt Enable Set Register for cpu1_ddata_ram7_pend
19	cpu1_ddata_ram6_enable_set	R/W1S	0h	Interrupt Enable Set Register for cpu1_ddata_ram6_pend
18	cpu1_ddata_ram5_enable_set	R/W1S	0h	Interrupt Enable Set Register for cpu1_ddata_ram5_pend
17	cpu1_ddata_ram4_enable_set	R/W1S	0h	Interrupt Enable Set Register for cpu1_ddata_ram4_pend
16	cpu1_ddata_ram3_enable_set	R/W1S	0h	Interrupt Enable Set Register for cpu1_ddata_ram3_pend
15	cpu1_ddata_ram2_enable_set	R/W1S	0h	Interrupt Enable Set Register for cpu1_ddata_ram2_pend

Copyright © 2025 Texas Instruments Incorporated

Table 11-1712. ded_enable_set_reg0 Register Field Descriptions (continued)

Bit	Field	Type	Reset	Description
14	cpu1_ddata_ram1_enable_set	R/W1S	0h	Interrupt Enable Set Register for cpu1_ddata_ram1_pend
13	cpu1_ddata_ram0_enable_set	R/W1S	0h	Interrupt Enable Set Register for cpu1_ddata_ram0_pend
12	cpu1_ddirty_ram_enable_set	R/W1S	0h	Interrupt Enable Set Register for cpu1_ddirty_ram_pend
11	cpu1_dtag_ram3_enable_set	R/W1S	0h	Interrupt Enable Set Register for cpu1_dtag_ram3_pend
10	cpu1_dtag_ram2_enable_set	R/W1S	0h	Interrupt Enable Set Register for cpu1_dtag_ram2_pend
9	cpu1_dtag_ram1_enable_set	R/W1S	0h	Interrupt Enable Set Register for cpu1_dtag_ram1_pend
8	cpu1_dtag_ram0_enable_set	R/W1S	0h	Interrupt Enable Set Register for cpu1_dtag_ram0_pend
7	cpu1_idata_bank3_enable_set	R/W1S	0h	Interrupt Enable Set Register for cpu1_idata_bank3_pend
6	cpu1_idata_bank2_enable_set	R/W1S	0h	Interrupt Enable Set Register for cpu1_idata_bank2_pend
5	cpu1_idata_bank1_enable_set	R/W1S	0h	Interrupt Enable Set Register for cpu1_idata_bank1_pend
4	cpu1_idata_bank0_enable_set	R/W1S	0h	Interrupt Enable Set Register for cpu1_idata_bank0_pend
3	cpu1_itag_ram3_enable_set	R/W1S	0h	Interrupt Enable Set Register for cpu1_itag_ram3_pend
2	cpu1_itag_ram2_enable_set	R/W1S	0h	Interrupt Enable Set Register for cpu1_itag_ram2_pend
1	cpu1_itag_ram1_enable_set	R/W1S	0h	Interrupt Enable Set Register for cpu1_itag_ram1_pend
0	cpu1_itag_ram0_enable_set	R/W1S	0h	Interrupt Enable Set Register for cpu1_itag_ram0_pend

Copyright © 2025 Texas Instruments Incorporated

11.8.5.3.18 ded_enable_clr_reg0 Register (Offset = 1C0h) [reset = X]

ded_enable_clr_reg0 is shown in Figure 11-498 and described in Table 11-1713.

Return to the Table 11-1695.

Interrupt Enable Clear Register 0

Figure 11-498. ded_enable_clr_reg0 Register

31	30	29	28	27	26	25	24
RESERVED				cpu1_ks_vim_ramecc_enable_clr	b1tcm1_bank1_enable_clr	b1tcm1_bank0_enable_clr	b0tcm1_bank1_enable_clr
R/W-X				R/W1C-0h	R/W1C-0h	R/W1C-0h	R/W1C-0h
23	22	21	20	19	18	17	16
b0tcm1_bank0_enable_clr	atcm1_bank1_enable_clr	atcm1_bank0_enable_clr	cpu1_ddata_ram7_enable_clr	cpu1_ddata_ram6_enable_clr	cpu1_ddata_ram5_enable_clr	cpu1_ddata_ram4_enable_clr	cpu1_ddata_ram3_enable_clr
R/W1C-0h	R/W1C-0h	R/W1C-0h	R/W1C-0h	R/W1C-0h	R/W1C-0h	R/W1C-0h	R/W1C-0h
15	14	13	12	11	10	9	8
cpu1_ddata_ram2_enable_clr	cpu1_ddata_ram1_enable_clr	cpu1_ddata_ram0_enable_clr	cpu1_ddirty_ram_enable_clr	cpu1_dtag_ram3_enable_clr	cpu1_dtag_ram2_enable_clr	cpu1_dtag_ram1_enable_clr	cpu1_dtag_ram0_enable_clr
R/W1C-0h	R/W1C-0h	R/W1C-0h	R/W1C-0h	R/W1C-0h	R/W1C-0h	R/W1C-0h	R/W1C-0h
7	6	5	4	3	2	1	0
cpu1_idata_bank3_enable_clr	cpu1_idata_bank2_enable_clr	cpu1_idata_bank1_enable_clr	cpu1_idata_bank0_enable_clr	cpu1_itag_ram3_enable_clr	cpu1_itag_ram2_enable_clr	cpu1_itag_ram1_enable_clr	cpu1_itag_ram0_enable_clr
R/W1C-0h	R/W1C-0h	R/W1C-0h	R/W1C-0h	R/W1C-0h	R/W1C-0h	R/W1C-0h	R/W1C-0h

Table 11-1713. ded_enable_clr_reg0 Register Field Descriptions

Bit	Field	Type	Reset	Description
31-28	RESERVED	R/W	X	
27	cpu1_ks_vim_ramecc_enable_clr	R/W1C	0h	Interrupt Enable Clear Register for cpu1_ks_vim_ramecc_pend
26	b1tcm1_bank1_enable_clr	R/W1C	0h	Interrupt Enable Clear Register for b1tcm1_bank1_pend
25	b1tcm1_bank0_enable_clr	R/W1C	0h	Interrupt Enable Clear Register for b1tcm1_bank0_pend
24	b0tcm1_bank1_enable_clr	R/W1C	0h	Interrupt Enable Clear Register for b0tcm1_bank1_pend
23	b0tcm1_bank0_enable_clr	R/W1C	0h	Interrupt Enable Clear Register for b0tcm1_bank0_pend
22	atcm1_bank1_enable_clr	R/W1C	0h	Interrupt Enable Clear Register for atcm1_bank1_pend
21	atcm1_bank0_enable_clr	R/W1C	0h	Interrupt Enable Clear Register for atcm1_bank0_pend
20	cpu1_ddata_ram7_enable_clr	R/W1C	0h	Interrupt Enable Clear Register for cpu1_ddata_ram7_pend
19	cpu1_ddata_ram6_enable_clr	R/W1C	0h	Interrupt Enable Clear Register for cpu1_ddata_ram6_pend
18	cpu1_ddata_ram5_enable_clr	R/W1C	0h	Interrupt Enable Clear Register for cpu1_ddata_ram5_pend
17	cpu1_ddata_ram4_enable_clr	R/W1C	0h	Interrupt Enable Clear Register for cpu1_ddata_ram4_pend
16	cpu1_ddata_ram3_enable_clr	R/W1C	0h	Interrupt Enable Clear Register for cpu1_ddata_ram3_pend
15	cpu1_ddata_ram2_enable_clr	R/W1C	0h	Interrupt Enable Clear Register for cpu1_ddata_ram2_pend
14	cpu1_ddata_ram1_enable_clr	R/W1C	0h	Interrupt Enable Clear Register for cpu1_ddata_ram1_pend

Copyright © 2025 Texas Instruments Incorporated

Table 11-1713. ded_enable_clr_reg0 Register Field Descriptions (continued)

Bit	Field	Type	Reset	Description
13	cpu1_ddata_ram0_enable_clr	R/W1C	0h	Interrupt Enable Clear Register for cpu1_ddata_ram0_pend
12	cpu1_ddirty_ram_enable_clr	R/W1C	0h	Interrupt Enable Clear Register for cpu1_ddirty_ram_pend
11	cpu1_dtag_ram3_enable_clr	R/W1C	0h	Interrupt Enable Clear Register for cpu1_dtag_ram3_pend
10	cpu1_dtag_ram2_enable_clr	R/W1C	0h	Interrupt Enable Clear Register for cpu1_dtag_ram2_pend
9	cpu1_dtag_ram1_enable_clr	R/W1C	0h	Interrupt Enable Clear Register for cpu1_dtag_ram1_pend
8	cpu1_dtag_ram0_enable_clr	R/W1C	0h	Interrupt Enable Clear Register for cpu1_dtag_ram0_pend
7	cpu1_idata_bank3_enable_clr	R/W1C	0h	Interrupt Enable Clear Register for cpu1_idata_bank3_pend
6	cpu1_idata_bank2_enable_clr	R/W1C	0h	Interrupt Enable Clear Register for cpu1_idata_bank2_pend
5	cpu1_idata_bank1_enable_clr	R/W1C	0h	Interrupt Enable Clear Register for cpu1_idata_bank1_pend
4	cpu1_idata_bank0_enable_clr	R/W1C	0h	Interrupt Enable Clear Register for cpu1_idata_bank0_pend
3	cpu1_itag_ram3_enable_clr	R/W1C	0h	Interrupt Enable Clear Register for cpu1_itag_ram3_pend
2	cpu1_itag_ram2_enable_clr	R/W1C	0h	Interrupt Enable Clear Register for cpu1_itag_ram2_pend
1	cpu1_itag_ram1_enable_clr	R/W1C	0h	Interrupt Enable Clear Register for cpu1_itag_ram1_pend
0	cpu1_itag_ram0_enable_clr	R/W1C	0h	Interrupt Enable Clear Register for cpu1_itag_ram0_pend

Copyright © 2025 Texas Instruments Incorporated

11.8.5.3.19 aggr_enable_set Register (Offset = 200h) [reset = X]

aggr_enable_set is shown in Figure 11-499 and described in Table 11-1714.

Return to the Table 11-1695.

AGGR interrupt enable set Register

Figure 11-499. aggr_enable_set Register

31	30	29	28	27	26	25	24
RESERVED							
R/W-X							
23	22	21	20	19	18	17	16
RESERVED							
R/W-X							
15	14	13	12	11	10	9	8
RESERVED							
R/W-X							
7	6	5	4	3	2	1	0
RESERVED						timeout	parity
R/W-X						R/W1S-0h	R/W1S-0h

Table 11-1714. aggr_enable_set Register Field Descriptions

Bit	Field	Type	Reset	Description
31-2	RESERVED	R/W	X	
1	timeout	R/W1S	0h	interrupt enable set for svbus timeout errors
0	parity	R/W1S	0h	interrupt enable set for parity errors

Copyright © 2025 Texas Instruments Incorporated

11.8.5.3.20 aggr_enable_clr Register (Offset = 204h) [reset = X]

aggr_enable_clr is shown in Figure 11-500 and described in Table 11-1715.

Return to the Table 11-1695.

AGGR interrupt enable clear Register

Figure 11-500. aggr_enable_clr Register

31	30	29	28	27	26	25	24
RESERVED							
R/W-X							
23	22	21	20	19	18	17	16
RESERVED							
R/W-X							
15	14	13	12	11	10	9	8
RESERVED							
R/W-X							
7	6	5	4	3	2	1	0
RESERVED						timeout	parity
R/W-X						R/W1C-0h	R/W1C-0h

Table 11-1715. aggr_enable_clr Register Field Descriptions

Bit	Field	Type	Reset	Description
31-2	RESERVED	R/W	X	
1	timeout	R/W1C	0h	interrupt enable clear for svbus timeout errors
0	parity	R/W1C	0h	interrupt enable clear for parity errors

Copyright © 2025 Texas Instruments Incorporated

11.8.5.3.21 aggr_status_set Register (Offset = 208h) [reset = X]

aggr_status_set is shown in Figure 11-501 and described in Table 11-1716.

Return to the Table 11-1695.

AGGR interrupt status set Register

Figure 11-501. aggr_status_set Register

31	30	29	28	27	26	25	24
RESERVED							
R/W-X							
23	22	21	20	19	18	17	16
RESERVED							
R/W-X							
15	14	13	12	11	10	9	8
RESERVED							
R/W-X							
7	6	5	4	3	2	1	0
RESERVED				timeout		parity	
R/W-X				R/Wincr-0h		R/Wincr-0h	

Table 11-1716. aggr_status_set Register Field Descriptions

Bit	Field	Type	Reset	Description
31-4	RESERVED	R/W	X	
3-2	timeout	R/Wincr	0h	interrupt status set for svbus timeout errors
1-0	parity	R/Wincr	0h	interrupt status set for parity errors

Copyright © 2025 Texas Instruments Incorporated

11.8.5.3.22 aggr_status_clr Register (Offset = 20Ch) [reset = X]

aggr_status_clr is shown in Figure 11-502 and described in Table 11-1717.

Return to the Table 11-1695.

AGGR interrupt status clear Register

Figure 11-502. aggr_status_clr Register

31	30	29	28	27	26	25	24
RESERVED							
R/W-X							
23	22	21	20	19	18	17	16
RESERVED							
R/W-X							
15	14	13	12	11	10	9	8
RESERVED							
R/W-X							
7	6	5	4	3	2	1	0
RESERVED				timeout		parity	
R/W-X				R/Wdecr-0h		R/Wdecr-0h	

Table 11-1717. aggr_status_clr Register Field Descriptions

Bit	Field	Type	Reset	Description
31-4	RESERVED	R/W	X	
3-2	timeout	R/Wdecr	0h	interrupt status clear for svbus timeout errors
1-0	parity	R/Wdecr	0h	interrupt status clear for parity errors

Copyright © 2025 Texas Instruments Incorporated

11.8.5.4 MSS_ECC_AGG_MSS Registers

Table 11-1718 lists the MSS_ECC_AGG_MSS registers. All register offset addresses not listed in Table 11-1718 should be considered as reserved locations and the register contents should not be modified.

Table 11-1718. MSS_ECC_AGG_MSS Registers

Offset	Acronym	Register Name	Section
0h	rev	Aggregator Revision Register	Section 12.8.5.4.1
8h	vector	ECC Vector Register	Section 12.8.5.4.2
Ch	stat	Misc Status	Section 12.8.5.4.3
10h	wrap_rev	ECC Wrapper Revision Register	Section 12.8.5.4.4
14h	ctrl	ECC Control	Section 12.8.5.4.5
18h	err_ctrl1	ECC Error Control1 Register	Section 12.8.5.4.6
1Ch	err_ctrl2	ECC Error Control2 Register	Section 12.8.5.4.7
20h	err_stat1	ECC Error Status1 Register	Section 12.8.5.4.8
24h	err_stat2	ECC Error Status2 Register	Section 12.8.5.4.9
28h	err_stat3	ECC Error Status3 Register	Section 12.8.5.4.10
3Ch	sec_eoi_reg	EOI Register	Section 12.8.5.4.11
40h	sec_status_reg0	Interrupt Status Register 0	Section 12.8.5.4.12
80h	sec_enable_set_reg0	Interrupt Enable Set Register 0	Section 12.8.5.4.13
C0h	sec_enable_clr_reg0	Interrupt Enable Clear Register 0	Section 12.8.5.4.14
13Ch	ded_eoi_reg	EOI Register	Section 12.8.5.4.15
140h	ded_status_reg0	Interrupt Status Register 0	Section 12.8.5.4.16
180h	ded_enable_set_reg0	Interrupt Enable Set Register 0	Section 12.8.5.4.17
1C0h	ded_enable_clr_reg0	Interrupt Enable Clear Register 0	Section 12.8.5.4.18
200h	aggr_enable_set	AGGR interrupt enable set Register	Section 12.8.5.4.19
204h	aggr_enable_clr	AGGR interrupt enable clear Register	Section 12.8.5.4.20
208h	aggr_status_set	AGGR interrupt status set Register	Section 12.8.5.4.21
20Ch	aggr_status_clr	AGGR interrupt status clear Register	Section 12.8.5.4.22

Copyright © 2025 Texas Instruments Incorporated

11.8.5.4.1 rev Register (Offset = 0h) [reset = 66A0C200h]

rev is shown in Figure 11-503 and described in Table 11-1719.

Return to the Table 11-1718.

Revision parameters

Figure 11-503. rev Register

31	30	29	28	27	26	25	24	23	22	21	20	19	18	17	16
scheme		bu		module_id											
R-1h		R-2h		R-6A0h											
15	14	13	12	11	10	9	8	7	6	5	4	3	2	1	0
revrtl					revmaj			custom		revmin					
R-18h					R-2h			R-0h		R-0h					

Table 11-1719. rev Register Field Descriptions

Bit	Field	Type	Reset	Description
31-30	scheme	R	1h	Scheme
29-28	bu	R	2h	bu
27-16	module_id	R	6A0h	Module ID
15-11	revrtl	R	18h	RTL version
10-8	revmaj	R	2h	Major version
7-6	custom	R	0h	Custom version
5-0	revmin	R	0h	Minor version

Copyright © 2025 Texas Instruments Incorporated

11.8.5.4.2 vector Register (Offset = 8h) [reset = X]

vector is shown in Figure 11-504 and described in Table 11-1720.

Return to the Table 11-1718.

ECC Vector Register

Figure 11-504. vector Register

31	30	29	28	27	26	25	24
RESERVED							rd_svbus_done
R/W-X							R-0h
23	22	21	20	19	18	17	16
rd_svbus_address							
R/W-0h							
15	14	13	12	11	10	9	8
rd_svbus	RESERVED				ecc_vector		
R/W1S-0h	R/W-X				R/W-0h		
7	6	5	4	3	2	1	0
ecc_vector							
R/W-0h							

Table 11-1720. vector Register Field Descriptions

Bit	Field	Type	Reset	Description
31-25	RESERVED	R/W	X	
24	rd_svbus_done	R	0h	Status to indicate if read on serial VBUS is complete
23-16	rd_svbus_address	R/W	0h	Read address
15	rd_svbus	R/W1S	0h	Write 1 to trigger a read on the serial VBUS
14-11	RESERVED	R/W	X	
10-0	ecc_vector	R/W	0h	Value written to select the corresponding ECC RAM for control or status

Copyright © 2025 Texas Instruments Incorporated

11.8.5.4.3 stat Register (Offset = Ch) [reset = X]

stat is shown in Figure 11-505 and described in Table 11-1721.

Return to the Table 11-1718.

Misc Status

Figure 11-505. stat Register

31	30	29	28	27	26	25	24	23	22	21	20	19	18	17	16	15	14	13	12	11	10	9	8	7	6	5	4	3	2	1	0
RESERVED																					num_rams										
R-X																					R-8h										

Table 11-1721. stat Register Field Descriptions

Bit	Field	Type	Reset	Description
31-11	RESERVED	R	X	
10-0	num_rams	R	8h	Indicates the number of RAMS serviced by the ECC aggregator

Copyright © 2025 Texas Instruments Incorporated

11.8.5.4.4 wrap_rev Register (Offset = 10h) [reset = 66A40202h]

wrap_rev is shown in Figure 11-506 and described in Table 11-1722.

Return to the Table 11-1718.

Revision parameters

Figure 11-506. wrap_rev Register

31	30	29	28	27	26	25	24	23	22	21	20	19	18	17	16
scheme		bu		module_id											
R-1h		R-2h		R-6A4h											
15	14	13	12	11	10	9	8	7	6	5	4	3	2	1	0
revrtl					revmaj			custom		revmin					
R-0h					R-2h			R-0h		R-2h					

Table 11-1722. wrap_rev Register Field Descriptions

Bit	Field	Type	Reset	Description
31-30	scheme	R	1h	Scheme
29-28	bu	R	2h	bu
27-16	module_id	R	6A4h	Module ID
15-11	revrtl	R	0h	RTL version
10-8	revmaj	R	2h	Major version
7-6	custom	R	0h	Custom version
5-0	revmin	R	2h	Minor version

Copyright © 2025 Texas Instruments Incorporated

11.8.5.4.5 ctrl Register (Offset = 14h) [reset = X]

ctrl is shown in Figure 11-507 and described in Table 11-1723.

Return to the Table 11-1718.

ECC Control Register

Figure 11-507. ctrl Register

31	30	29	28	27	26	25	24
RESERVED							
R/W-X							
23	22	21	20	19	18	17	16
RESERVED							
R/W-X							
15	14	13	12	11	10	9	8
RESERVED							check_svbus_timeout
R/W-X							R/W-1h
7	6	5	4	3	2	1	0
check_parity	error_once	force_n_row	force_ded	force_sec	enable_rmw	ecc_check	ecc_enable
R/W-1h	R/W-0h	R/W-0h	R/W-0h	R/W-0h	R/W-1h	R/W-1h	R/W-1h

Table 11-1723. ctrl Register Field Descriptions

Bit	Field	Type	Reset	Description
31-9	RESERVED	R/W	X	
8	check_svbus_timeout	R/W	1h	check for svbus timeout errors
7	check_parity	R/W	1h	check for parity errors
6	error_once	R/W	0h	Force Error only once
5	force_n_row	R/W	0h	Force Error on any RAM read
4	force_ded	R/W	0h	Force Double Bit Error
3	force_sec	R/W	0h	Force Single Bit Error
2	enable_rmw	R/W	1h	Enable rmw
1	ecc_check	R/W	1h	Enable ECC check
0	ecc_enable	R/W	1h	Enable ECC

Copyright © 2025 Texas Instruments Incorporated

11.8.5.4.6 err_ctrl1 Register (Offset = 18h) [reset = 0h]

err_ctrl1 is shown in Figure 11-508 and described in Table 11-1724.

Return to the Table 11-1718.

ECC Error Control1 Register

Figure 11-508. err_ctrl1 Register

31	30	29	28	27	26	25	24	23	22	21	20	19	18	17	16	15	14	13	12	11	10	9	8	7	6	5	4	3	2	1	0
ecc_row																															
R/W-0h																															

Table 11-1724. err_ctrl1 Register Field Descriptions

Bit	Field	Type	Reset	Description
31-0	ecc_row	R/W	0h	Row address where single or double-bit error needs to be applied. This is ignored if force_n_row is set

Copyright © 2025 Texas Instruments Incorporated

11.8.5.4.7 err_ctrl2 Register (Offset = 1Ch) [reset = 0h]

err_ctrl2 is shown in Figure 11-509 and described in Table 11-1725.

Return to the Table 11-1718.

ECC Error Control2 Register

Figure 11-509. err_ctrl2 Register

31	30	29	28	27	26	25	24	23	22	21	20	19	18	17	16	15	14	13	12	11	10	9	8	7	6	5	4	3	2	1	0
ecc_bit2																ecc_bit1															
R/W-0h																R/W-0h															

Table 11-1725. err_ctrl2 Register Field Descriptions

Bit	Field	Type	Reset	Description
31-16	ecc_bit2	R/W	0h	Data bit that needs to be flipped if double bit error needs to be forced
15-0	ecc_bit1	R/W	0h	Data bit that needs to be flipped when force_sec is set

Copyright © 2025 Texas Instruments Incorporated

11.8.5.4.8 err_stat1 Register (Offset = 20h) [reset = 0h]

err_stat1 is shown in Figure 11-510 and described in Table 11-1726.

Return to the Table 11-1718.

ECC Error Status1 Register

Figure 11-510. err_stat1 Register

31	30	29	28	27	26	25	24
ecc_bit1							
R-0h							
23	22	21	20	19	18	17	16
ecc_bit1							
R-0h							
15	14	13	12	11	10	9	8
clr_ctrl_reg_err	clr_parity_err		clr_ecc_other	clr_ecc_ded		clr_ecc_sec	
R/W1C-0h	R/Wdecr-0h		R/W1C-0h	R/Wdecr-0h		R/Wdecr-0h	
7	6	5	4	3	2	1	0
ctr_reg_err	parity_err		ecc_other	ecc_ded		ecc_sec	
R/W1S-0h	R/W1S-0h		R/W1S-0h	R/Wincr-0h		R/Wincr-0h	

Table 11-1726. err_stat1 Register Field Descriptions

Bit	Field	Type	Reset	Description
31-16	ecc_bit1	R	0h	Data bit that corresponds to the single-bit error
15	clr_ctrl_reg_err	R/W1C	0h	Clear control reg error Error Status, you must also re write the contorl ergister itself to clear this
14-13	clr_parity_err	R/Wdecr	0h	Clear parity Error Status
12	clr_ecc_other	R/W1C	0h	Clear other Error Status
11-10	clr_ecc_ded	R/Wdecr	0h	Clear Double Bit Error Status
9-8	clr_ecc_sec	R/Wdecr	0h	Clear Single Bit Error Status
7	ctr_reg_err	R/W1S	0h	control register error pending, Level interrupt
6-5	parity_err	R/W1S	0h	Level parity error Error Status
4	ecc_other	R/W1S	0h	successive single-bit errors have occurred while a writeback is still pending, Level interrupt
3-2	ecc_ded	R/Wincr	0h	Level Double Bit Error Status
1-0	ecc_sec	R/Wincr	0h	Level Single Bit Error Status

Copyright © 2025 Texas Instruments Incorporated

11.8.5.4.9 err_stat2 Register (Offset = 24h) [reset = 0h]

err_stat2 is shown in Figure 11-511 and described in Table 11-1727.

Return to the Table 11-1718.

ECC Error Status2 Register

Figure 11-511. err_stat2 Register

31	30	29	28	27	26	25	24	23	22	21	20	19	18	17	16	15	14	13	12	11	10	9	8	7	6	5	4	3	2	1	0
ecc_row																															
R-0h																															

Table 11-1727. err_stat2 Register Field Descriptions

Bit	Field	Type	Reset	Description
31-0	ecc_row	R	0h	Row address where the single or double-bit error has occurred

Copyright © 2025 Texas Instruments Incorporated

11.8.5.4.10 err_stat3 Register (Offset = 28h) [reset = X]

err_stat3 is shown in Figure 11-512 and described in Table 11-1728.

Return to the Table 11-1718.

ECC Error Status3 Register

Figure 11-512. err_stat3 Register

31	30	29	28	27	26	25	24
RESERVED							
R/W-X							
23	22	21	20	19	18	17	16
RESERVED							
R/W-X							
15	14	13	12	11	10	9	8
RESERVED						clr_svbus_timeout_err	RESERVED
R/W-X						R/W1C-0h	R/W-X
7	6	5	4	3	2	1	0
RESERVED						svbus_timeout_err	wb_pend
R/W-X						R/W1S-0h	R-0h

Table 11-1728. err_stat3 Register Field Descriptions

Bit	Field	Type	Reset	Description
31-10	RESERVED	R/W	X	
9	clr_svbus_timeout_err	R/W1C	0h	Clear svbus timeout Error Status
8-2	RESERVED	R/W	X	
1	svbus_timeout_err	R/W1S	0h	Level svbus timeout error Error Status
0	wb_pend	R	0h	delayed write back pending Status

Copyright © 2025 Texas Instruments Incorporated

11.8.5.4.11 sec_eoi_reg Register (Offset = 3Ch) [reset = X]

sec_eoi_reg is shown in Figure 11-513 and described in Table 11-1729.

Return to the Table 11-1718.

EOI Register

Figure 11-513. sec_eoi_reg Register

31	30	29	28	27	26	25	24
RESERVED							
R/W-X							
23	22	21	20	19	18	17	16
RESERVED							
R/W-X							
15	14	13	12	11	10	9	8
RESERVED							
R/W-X							
7	6	5	4	3	2	1	0
RESERVED							eoi_wr
R/W-X							R/W1S-0h

Table 11-1729. sec_eoi_reg Register Field Descriptions

Bit	Field	Type	Reset	Description
31-1	RESERVED	R/W	X	
0	eoi_wr	R/W1S	0h	EOI Register

Copyright © 2025 Texas Instruments Incorporated

11.8.5.4.12 sec_status_reg0 Register (Offset = 40h) [reset = X]

sec_status_reg0 is shown in Figure 11-514 and described in Table 11-1730.

Return to the Table 11-1718.

Interrupt Status Register 0

Figure 11-514. sec_status_reg0 Register

31	30	29	28	27	26	25	24
RESERVED							
R/W-X							
23	22	21	20	19	18	17	16
RESERVED							
R/W-X							
15	14	13	12	11	10	9	8
RESERVED							
R/W-X							
7	6	5	4	3	2	1	0
tptc_b0_pend	tptc_a1_pend	tptc_a0_pend	gpadc_pend	mss_retram_pend	mss_mbox_pend	mss_l2slv1_pend	mss_l2slv0_pend
R/W1S-0h	R/W1S-0h	R/W1S-0h	R/W1S-0h	R/W1S-0h	R/W1S-0h	R/W1S-0h	R/W1S-0h

Table 11-1730. sec_status_reg0 Register Field Descriptions

Bit	Field	Type	Reset	Description
31-8	RESERVED	R/W	X	
7	tptc_b0_pend	R/W1S	0h	Interrupt Pending Status for tptc_b0_pend
6	tptc_a1_pend	R/W1S	0h	Interrupt Pending Status for tptc_a1_pend
5	tptc_a0_pend	R/W1S	0h	Interrupt Pending Status for tptc_a0_pend
4	gpadc_pend	R/W1S	0h	Interrupt Pending Status for gpadc_pend
3	mss_retram_pend	R/W1S	0h	Interrupt Pending Status for mss_retram_pend
2	mss_mbox_pend	R/W1S	0h	Interrupt Pending Status for mss_mbox_pend
1	mss_l2slv1_pend	R/W1S	0h	Interrupt Pending Status for mss_l2slv1_pend
0	mss_l2slv0_pend	R/W1S	0h	Interrupt Pending Status for mss_l2slv0_pend

Copyright © 2025 Texas Instruments Incorporated

11.8.5.4.13 sec_enable_set_reg0 Register (Offset = 80h) [reset = X]

sec_enable_set_reg0 is shown in Figure 11-515 and described in Table 11-1731.

Return to the Table 11-1718.

Interrupt Enable Set Register 0

Figure 11-515. sec_enable_set_reg0 Register

31	30	29	28	27	26	25	24
RESERVED							
R/W-X							
23	22	21	20	19	18	17	16
RESERVED							
R/W-X							
15	14	13	12	11	10	9	8
RESERVED							
R/W-X							
7	6	5	4	3	2	1	0
tptc_b0_enable_set	tptc_a1_enable_set	tptc_a0_enable_set	gpadc_enable_set	mss_retram_enable_set	mss_mbox_enable_set	mss_l2slv1_enable_set	mss_l2slv0_enable_set
R/W1S-0h	R/W1S-0h	R/W1S-0h	R/W1S-0h	R/W1S-0h	R/W1S-0h	R/W1S-0h	R/W1S-0h

Table 11-1731. sec_enable_set_reg0 Register Field Descriptions

Bit	Field	Type	Reset	Description
31-8	RESERVED	R/W	X	
7	tptc_b0_enable_set	R/W1S	0h	Interrupt Enable Set Register for tptc_b0_pend
6	tptc_a1_enable_set	R/W1S	0h	Interrupt Enable Set Register for tptc_a1_pend
5	tptc_a0_enable_set	R/W1S	0h	Interrupt Enable Set Register for tptc_a0_pend
4	gpadc_enable_set	R/W1S	0h	Interrupt Enable Set Register for gpadc_pend
3	mss_retram_enable_set	R/W1S	0h	Interrupt Enable Set Register for mss_retram_pend
2	mss_mbox_enable_set	R/W1S	0h	Interrupt Enable Set Register for mss_mbox_pend
1	mss_l2slv1_enable_set	R/W1S	0h	Interrupt Enable Set Register for mss_l2slv1_pend
0	mss_l2slv0_enable_set	R/W1S	0h	Interrupt Enable Set Register for mss_l2slv0_pend

Copyright © 2025 Texas Instruments Incorporated

11.8.5.4.14 sec_enable_clr_reg0 Register (Offset = C0h) [reset = X]

sec_enable_clr_reg0 is shown in Figure 11-516 and described in Table 11-1732.

Return to the Table 11-1718.

Interrupt Enable Clear Register 0

Figure 11-516. sec_enable_clr_reg0 Register

31	30	29	28	27	26	25	24
RESERVED							
R/W-X							
23	22	21	20	19	18	17	16
RESERVED							
R/W-X							
15	14	13	12	11	10	9	8
RESERVED							
R/W-X							
7	6	5	4	3	2	1	0
tptc_b0_enable_clr	tptc_a1_enable_clr	tptc_a0_enable_clr	gpadc_enable_clr	mss_retram_enable_clr	mss_mbox_enable_clr	mss_l2slv1_enable_clr	mss_l2slv0_enable_clr
R/W1C-0h	R/W1C-0h	R/W1C-0h	R/W1C-0h	R/W1C-0h	R/W1C-0h	R/W1C-0h	R/W1C-0h

Table 11-1732. sec_enable_clr_reg0 Register Field Descriptions

Bit	Field	Type	Reset	Description
31-8	RESERVED	R/W	X	
7	tptc_b0_enable_clr	R/W1C	0h	Interrupt Enable Clear Register for tptc_b0_pend
6	tptc_a1_enable_clr	R/W1C	0h	Interrupt Enable Clear Register for tptc_a1_pend
5	tptc_a0_enable_clr	R/W1C	0h	Interrupt Enable Clear Register for tptc_a0_pend
4	gpadc_enable_clr	R/W1C	0h	Interrupt Enable Clear Register for gpadc_pend
3	mss_retram_enable_clr	R/W1C	0h	Interrupt Enable Clear Register for mss_retram_pend
2	mss_mbox_enable_clr	R/W1C	0h	Interrupt Enable Clear Register for mss_mbox_pend
1	mss_l2slv1_enable_clr	R/W1C	0h	Interrupt Enable Clear Register for mss_l2slv1_pend
0	mss_l2slv0_enable_clr	R/W1C	0h	Interrupt Enable Clear Register for mss_l2slv0_pend

Copyright © 2025 Texas Instruments Incorporated

11.8.5.4.15 ded_eoi_reg Register (Offset = 13Ch) [reset = X]

ded_eoi_reg is shown in Figure 11-517 and described in Table 11-1733.

Return to the Table 11-1718.

EOI Register

Figure 11-517. ded_eoi_reg Register

31	30	29	28	27	26	25	24
RESERVED							
R/W-X							
23	22	21	20	19	18	17	16
RESERVED							
R/W-X							
15	14	13	12	11	10	9	8
RESERVED							
R/W-X							
7	6	5	4	3	2	1	0
RESERVED							eoi_wr
R/W-X							R/W1S-0h

Table 11-1733. ded_eoi_reg Register Field Descriptions

Bit	Field	Type	Reset	Description
31-1	RESERVED	R/W	X	
0	eoi_wr	R/W1S	0h	EOI Register

Copyright © 2025 Texas Instruments Incorporated

11.8.5.4.16 ded_status_reg0 Register (Offset = 140h) [reset = X]

ded_status_reg0 is shown in Figure 11-518 and described in Table 11-1734.

Return to the Table 11-1718.

Interrupt Status Register 0

Figure 11-518. ded_status_reg0 Register

31	30	29	28	27	26	25	24
RESERVED							
R/W-X							
23	22	21	20	19	18	17	16
RESERVED							
R/W-X							
15	14	13	12	11	10	9	8
RESERVED							
R/W-X							
7	6	5	4	3	2	1	0
tptc_b0_pend	tptc_a1_pend	tptc_a0_pend	gpadc_pend	mss_retram_pend	mss_mbox_pend	mss_l2slv1_pend	mss_l2slv0_pend
R/W1S-0h	R/W1S-0h	R/W1S-0h	R/W1S-0h	R/W1S-0h	R/W1S-0h	R/W1S-0h	R/W1S-0h

Table 11-1734. ded_status_reg0 Register Field Descriptions

Bit	Field	Type	Reset	Description
31-8	RESERVED	R/W	X	
7	tptc_b0_pend	R/W1S	0h	Interrupt Pending Status for tptc_b0_pend
6	tptc_a1_pend	R/W1S	0h	Interrupt Pending Status for tptc_a1_pend
5	tptc_a0_pend	R/W1S	0h	Interrupt Pending Status for tptc_a0_pend
4	gpadc_pend	R/W1S	0h	Interrupt Pending Status for gpadc_pend
3	mss_retram_pend	R/W1S	0h	Interrupt Pending Status for mss_retram_pend
2	mss_mbox_pend	R/W1S	0h	Interrupt Pending Status for mss_mbox_pend
1	mss_l2slv1_pend	R/W1S	0h	Interrupt Pending Status for mss_l2slv1_pend
0	mss_l2slv0_pend	R/W1S	0h	Interrupt Pending Status for mss_l2slv0_pend

Copyright © 2025 Texas Instruments Incorporated

11.8.5.4.17 ded_enable_set_reg0 Register (Offset = 180h) [reset = X]

ded_enable_set_reg0 is shown in Figure 11-519 and described in Table 11-1735.

Return to the Table 11-1718.

Interrupt Enable Set Register 0

Figure 11-519. ded_enable_set_reg0 Register

31	30	29	28	27	26	25	24
RESERVED							
R/W-X							
23	22	21	20	19	18	17	16
RESERVED							
R/W-X							
15	14	13	12	11	10	9	8
RESERVED							
R/W-X							
7	6	5	4	3	2	1	0
tptc_b0_enable_set	tptc_a1_enable_set	tptc_a0_enable_set	gpadc_enable_set	mss_retram_enable_set	mss_mbox_enable_set	mss_l2slv1_enable_set	mss_l2slv0_enable_set
R/W1S-0h	R/W1S-0h	R/W1S-0h	R/W1S-0h	R/W1S-0h	R/W1S-0h	R/W1S-0h	R/W1S-0h

Table 11-1735. ded_enable_set_reg0 Register Field Descriptions

Bit	Field	Type	Reset	Description
31-8	RESERVED	R/W	X	
7	tptc_b0_enable_set	R/W1S	0h	Interrupt Enable Set Register for tptc_b0_pend
6	tptc_a1_enable_set	R/W1S	0h	Interrupt Enable Set Register for tptc_a1_pend
5	tptc_a0_enable_set	R/W1S	0h	Interrupt Enable Set Register for tptc_a0_pend
4	gpadc_enable_set	R/W1S	0h	Interrupt Enable Set Register for gpadc_pend
3	mss_retram_enable_set	R/W1S	0h	Interrupt Enable Set Register for mss_retram_pend
2	mss_mbox_enable_set	R/W1S	0h	Interrupt Enable Set Register for mss_mbox_pend
1	mss_l2slv1_enable_set	R/W1S	0h	Interrupt Enable Set Register for mss_l2slv1_pend
0	mss_l2slv0_enable_set	R/W1S	0h	Interrupt Enable Set Register for mss_l2slv0_pend

Copyright © 2025 Texas Instruments Incorporated

11.8.5.4.18 ded_enable_clr_reg0 Register (Offset = 1C0h) [reset = X]

ded_enable_clr_reg0 is shown in Figure 11-520 and described in Table 11-1736.

Return to the Table 11-1718.

Interrupt Enable Clear Register 0

Figure 11-520. ded_enable_clr_reg0 Register

31	30	29	28	27	26	25	24
RESERVED							
R/W-X							
23	22	21	20	19	18	17	16
RESERVED							
R/W-X							
15	14	13	12	11	10	9	8
RESERVED							
R/W-X							
7	6	5	4	3	2	1	0
tptc_b0_enable_clr	tptc_a1_enable_clr	tptc_a0_enable_clr	gpadc_enable_clr	mss_retram_enable_clr	mss_mbox_enable_clr	mss_l2slv1_enable_clr	mss_l2slv0_enable_clr
R/W1C-0h	R/W1C-0h	R/W1C-0h	R/W1C-0h	R/W1C-0h	R/W1C-0h	R/W1C-0h	R/W1C-0h

Table 11-1736. ded_enable_clr_reg0 Register Field Descriptions

Bit	Field	Type	Reset	Description
31-8	RESERVED	R/W	X	
7	tptc_b0_enable_clr	R/W1C	0h	Interrupt Enable Clear Register for tptc_b0_pend
6	tptc_a1_enable_clr	R/W1C	0h	Interrupt Enable Clear Register for tptc_a1_pend
5	tptc_a0_enable_clr	R/W1C	0h	Interrupt Enable Clear Register for tptc_a0_pend
4	gpadc_enable_clr	R/W1C	0h	Interrupt Enable Clear Register for gpadc_pend
3	mss_retram_enable_clr	R/W1C	0h	Interrupt Enable Clear Register for mss_retram_pend
2	mss_mbox_enable_clr	R/W1C	0h	Interrupt Enable Clear Register for mss_mbox_pend
1	mss_l2slv1_enable_clr	R/W1C	0h	Interrupt Enable Clear Register for mss_l2slv1_pend
0	mss_l2slv0_enable_clr	R/W1C	0h	Interrupt Enable Clear Register for mss_l2slv0_pend

Copyright © 2025 Texas Instruments Incorporated

11.8.5.4.19 aggr_enable_set Register (Offset = 200h) [reset = X]

aggr_enable_set is shown in Figure 11-521 and described in Table 11-1737.

Return to the Table 11-1718.

AGGR interrupt enable set Register

Figure 11-521. aggr_enable_set Register

31	30	29	28	27	26	25	24
RESERVED							
R/W-X							
23	22	21	20	19	18	17	16
RESERVED							
R/W-X							
15	14	13	12	11	10	9	8
RESERVED							
R/W-X							
7	6	5	4	3	2	1	0
RESERVED						timeout	parity
R/W-X						R/W1S-0h	R/W1S-0h

Table 11-1737. aggr_enable_set Register Field Descriptions

Bit	Field	Type	Reset	Description
31-2	RESERVED	R/W	X	
1	timeout	R/W1S	0h	interrupt enable set for svbus timeout errors
0	parity	R/W1S	0h	interrupt enable set for parity errors

Copyright © 2025 Texas Instruments Incorporated

11.8.5.4.20 aggr_enable_clr Register (Offset = 204h) [reset = X]

aggr_enable_clr is shown in Figure 11-522 and described in Table 11-1738.

Return to the Table 11-1718.

AGGR interrupt enable clear Register

Figure 11-522. aggr_enable_clr Register

31	30	29	28	27	26	25	24
RESERVED							
R/W-X							
23	22	21	20	19	18	17	16
RESERVED							
R/W-X							
15	14	13	12	11	10	9	8
RESERVED							
R/W-X							
7	6	5	4	3	2	1	0
RESERVED						timeout	parity
R/W-X						R/W1C-0h	R/W1C-0h

Table 11-1738. aggr_enable_clr Register Field Descriptions

Bit	Field	Type	Reset	Description
31-2	RESERVED	R/W	X	
1	timeout	R/W1C	0h	interrupt enable clear for svbus timeout errors
0	parity	R/W1C	0h	interrupt enable clear for parity errors

Copyright © 2025 Texas Instruments Incorporated

11.8.5.4.21 aggr_status_set Register (Offset = 208h) [reset = X]

aggr_status_set is shown in Figure 11-523 and described in Table 11-1739.

Return to the Table 11-1718.

AGGR interrupt status set Register

Figure 11-523. aggr_status_set Register

31	30	29	28	27	26	25	24
RESERVED							
R/W-X							
23	22	21	20	19	18	17	16
RESERVED							
R/W-X							
15	14	13	12	11	10	9	8
RESERVED							
R/W-X							
7	6	5	4	3	2	1	0
RESERVED				timeout		parity	
R/W-X				R/Wincr-0h		R/Wincr-0h	

Table 11-1739. aggr_status_set Register Field Descriptions

Bit	Field	Type	Reset	Description
31-4	RESERVED	R/W	X	
3-2	timeout	R/Wincr	0h	interrupt status set for svbus timeout errors
1-0	parity	R/Wincr	0h	interrupt status set for parity errors

Copyright © 2025 Texas Instruments Incorporated

11.8.5.4.22 aggr_status_clr Register (Offset = 20Ch) [reset = X]

aggr_status_clr is shown in Figure 11-524 and described in Table 11-1740.

Return to the Table 11-1718.

AGGR interrupt status clear Register

Figure 11-524. aggr_status_clr Register

31	30	29	28	27	26	25	24
RESERVED							
R/W-X							
23	22	21	20	19	18	17	16
RESERVED							
R/W-X							
15	14	13	12	11	10	9	8
RESERVED							
R/W-X							
7	6	5	4	3	2	1	0
RESERVED				timeout		parity	
R/W-X				R/Wdecr-0h		R/Wdecr-0h	

Table 11-1740. aggr_status_clr Register Field Descriptions

Bit	Field	Type	Reset	Description
31-4	RESERVED	R/W	X	
3-2	timeout	R/Wdecr	0h	interrupt status clear for svbus timeout errors
1-0	parity	R/Wdecr	0h	interrupt status clear for parity errors

11.8.6 Error Signaling Module (ESM)

This section provides the details of the error signaling module (ESM) that aggregates device errors and provides internal and external error response based on error severity.

11.8.6.1 Overview

The Error Signaling Module (ESM) collects and reports the various error conditions on the microcontroller. The error condition is categorized based on a severity level. Error response is then generated based on the category of the error. Possible error responses include a low priority interrupt, high priority interrupt, and an external pin action.

11.8.6.2 Feature List

- Up to 192 error channels (MSS/DSS) are supported, divided into 3 different groups:
  - 128 Group1 (low severity) channels with configurable interrupt generation and configurable $\overline{\text{ERROR}}$ pin behavior
  - 32 Group2 (high severity) channels with predefined interrupt generation and predefined $\overline{\text{ERROR}}$ pin behavior
  - 32 Group3 (high severity) channels with no interrupt generation and predefined $\overline{\text{ERROR}}$ pin behavior. These channels have no interrupt response as they are reserved for CPU based diagnostics that generate aborts directly to the CPU.
- Dedicated device $\overline{\text{ERROR}}$ pin to signal an external observer
- Configurable timebase for $\overline{\text{ERROR}}$ pin output
- Error forcing capability for latent fault testing

Copyright © 2025 Texas Instruments Incorporated

11.8.6.3 Block Diagram

As shown in Figure 11-525, the ESM channels are divided into three groups. Group1 channels are considered to be low severity. Group1 errors have a configurable interrupt response and configurable $\overline{\text{ERROR}}$ pin behavior. Note that the ESM Status Register 1 (ESMSR1) for error group 1 gets updated, regardless if the interrupt enable is active or not. Group2 channels are $\overline{\text{ERROR}}$ high severity. Group2 errors always generate a high priority interrupt and an output on the $\overline{\text{ERROR}}$ pin. Group3 errors are reserved for high severity errors generated by diagnostics which have already generated a CPU abort response. Because an abort response is generated, there is no need to generate an interrupt response. Group3 errors always generate an $\overline{\text{ERROR}}$ pin output.

The ESM interrupt and $\overline{\text{ERROR}}$ pin behavior are also summarized in Table 11-1741.

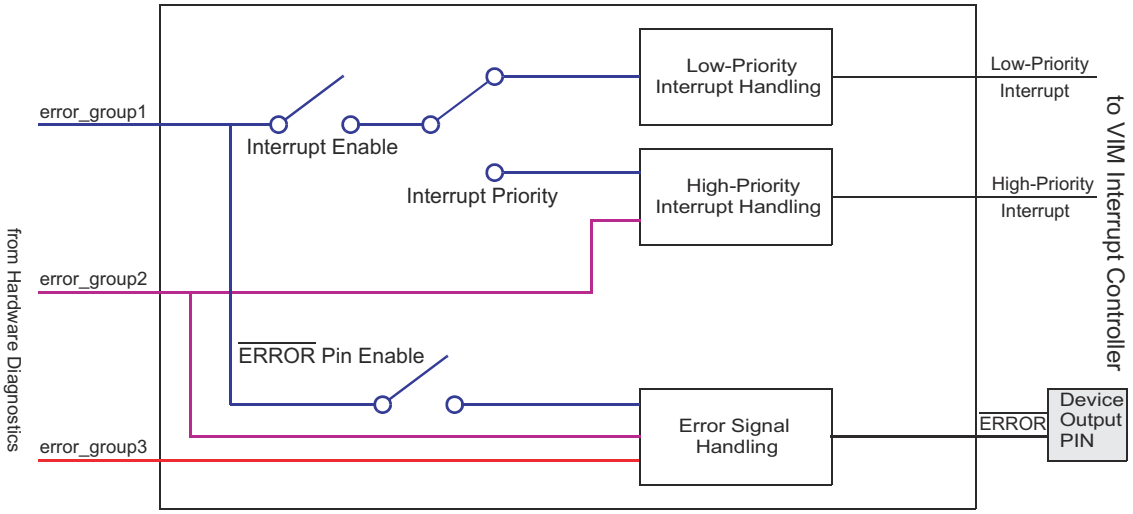

Note that the ESM Status Register 1 (ESMSR1) for error_group1 gets updated, regardless if the interrupt enable is active or not.

Figure 11-525. Block Diagram

Copyright © 2025 Texas Instruments Incorporated

Table 11-1741. ESM Interrupt and $\overline{\text{ERROR}}$ Pin Behavior

Error Group	Interrupt Generated	Interrupt Priority	$\overline{\text{ERROR}}$ Pin Response Generated
1	configurable interrupt	configurable priority	configurable output generation
2	interrupt generated	high priority	output generated
3	no interrupt	NA	output generated

Figure 11-526 and Figure 11-527 show the interrupt response handling and $\overline{\text{ERROR}}$ pin response handling with register configuration. The total active time of the $\overline{\text{ERROR}}$ pin is controlled by the Low-Time Counter Preload register (LTCP) and the key register (ESMEPSR) as shown in Figure 11-527. See for details.

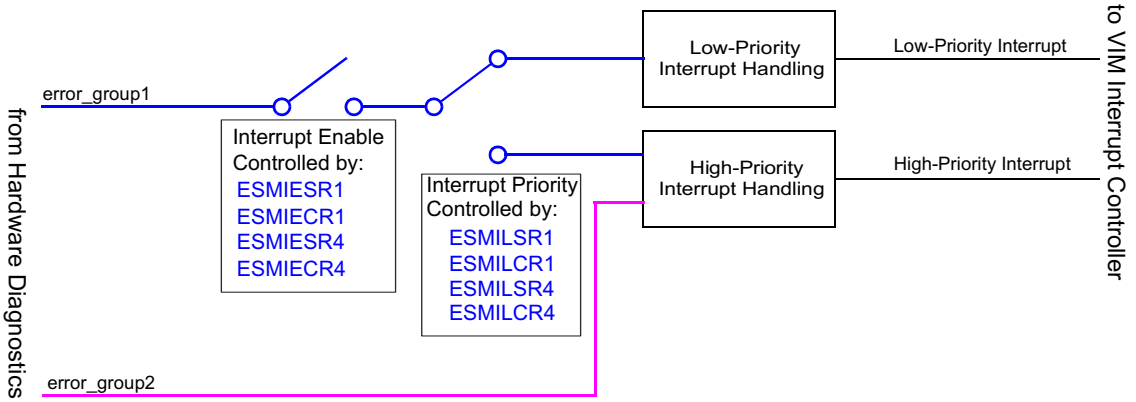

Figure 11-526. Interrupt Response Handling

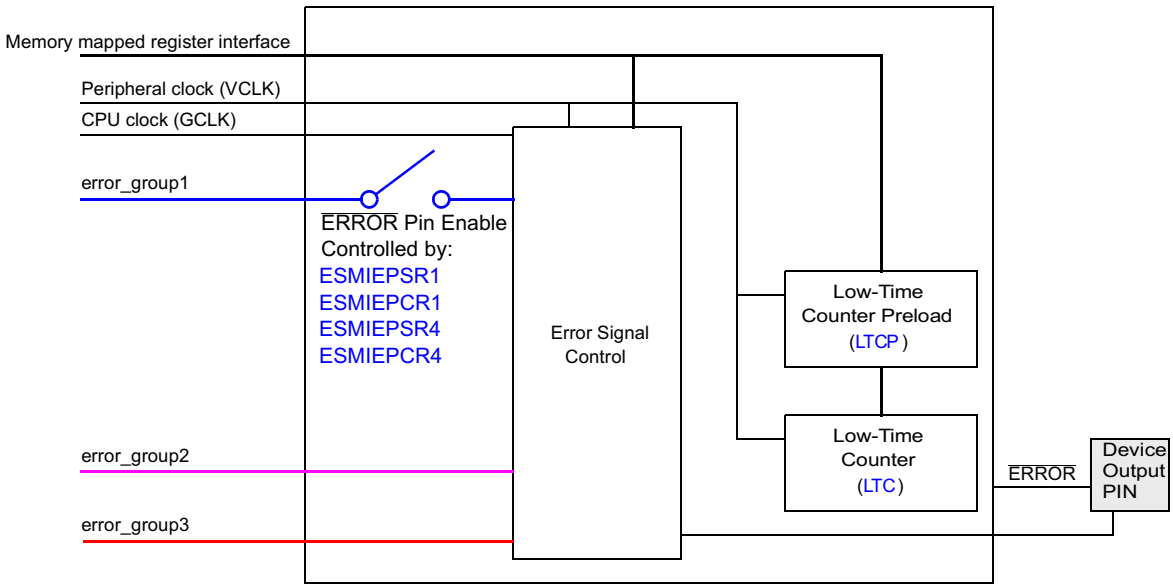

Figure 11-527. $\overline{\text{ERROR}}$ Pin Response Handling

11.8.6.4 Integration Details

TPR1x has 3 instances of the ESM module.

	Parameters

Copyright © 2025 Texas Instruments Incorporated

Instance	Max Group 1	Max Group 2	Max Group 3
MSS_ESM	128	32	32
DSS_ESM	128	32	32
HSM_ESM	Refer HSM Design Specification		

Refer to Section 11.8.4.9 for the ESM Interrupt map.

Copyright © 2025 Texas Instruments Incorporated

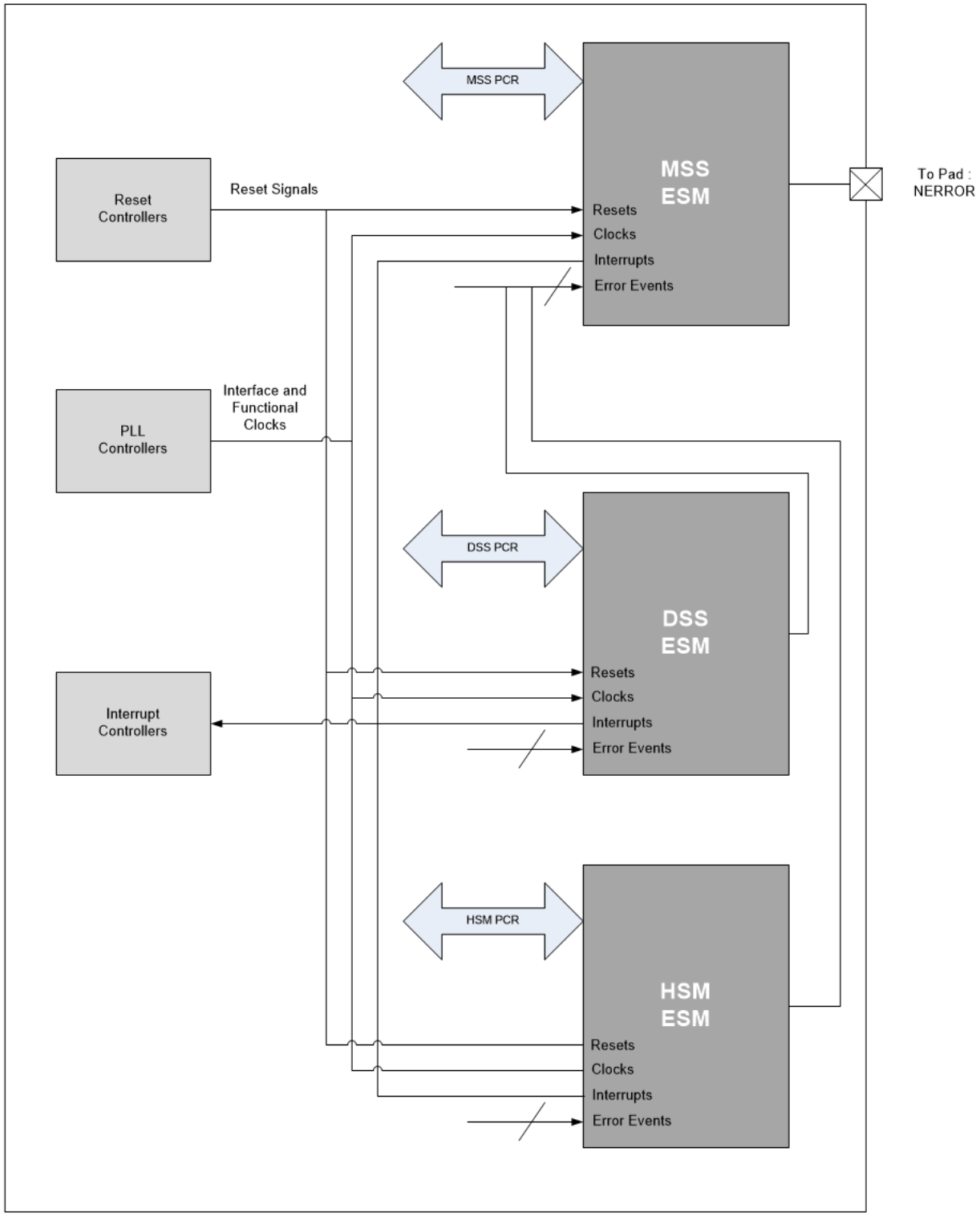

Figure 11-528. ESM Block Diagram

11.8.6.5 Module Operation

This device has 40 error channels (APPSS), divided into 2 different error groups. Please refer to the device datasheet for ESM channel assignment details.

Copyright © 2025 Texas Instruments Incorporated

The ESM module has error flags for each error channel. The error status registers ESMSR1, ESMSR4, ESMSR2, ESMSR3 provide status information on a pending error of Group1 (Channel 0-31), Group1 (Channel 32-63), Group1 (Channel 64-95), Group2, and Group3, respectively. The ESMEPSR register provides the current $\overline{\text{ERROR}}$ status. The module also provides a status shadow register, ESMSSR2, which maintains the error flags of Group2 until power-on reset ($\overline{\text{PORRST}}$) is asserted. See for details of their behavior during power on reset and warm reset.

Once an error occurs, the ESM module will set the corresponding error flags. In addition, it can trigger an interrupt, $\overline{\text{ERROR}}$ pin outputs low depending on the ESM settings. Once the $\overline{\text{ERROR}}$ pin outputs low, a power on reset or a write of 0x5 to ESMEKR is required to release the ESM error pin back to normal state. The application can read the error status registers (ESMSR1, ESMSR4, ESMSR7, ESMSR2, and ESMSR3) to debug the error. If an $\overline{\text{RST}}$ is triggered or the error interrupt has been served, the error flag of Group2 should be read from ESMSSR2 because the error flag in ESMSR2 will be cleared by $\overline{\text{RST}}$.

The functionality of the $\overline{\text{ERROR}}$ pin can be tested by forcing an error.

11.8.6.5.1 Reset Behavior

Power on reset:

- $\overline{\text{ERROR}}$ pin behavior

  When nPORRST is active, the $\overline{\text{ERROR}}$ pin is in a high impedance state (output drivers disabled).
- Register behavior

  After $\overline{\text{PORRST}}$, all registers in ESM module will be re-initialized to the default value. All the error status registers are cleared to zero.

Warm reset ($\overline{\text{RST}}$):

- $\overline{\text{ERROR}}$ pin behavior

  During $\overline{\text{RST}}$, the $\overline{\text{ERROR}}$ pin is in “output active” state with pull-down disabled. The $\overline{\text{ERROR}}$ pin remains unchanged after $\overline{\text{RST}}$.
- Register behavior

  After $\overline{\text{RST}}$, ESMSR1, ESMSR4, ESMSR7, ESMSSR2, ESMSR3 and ESMEPSR register values remains un-changed. Since $\overline{\text{RST}}$ does not clear the critical failure registers, the user can read those registers to debug the failures after $\overline{\text{RST}}$ pin goes back to high.

After $\overline{\text{RST}}$, if one of the flags in ESMSR1, ESMSR4 and ESMSR7 is set, the interrupt service routine will be called once the corresponding interrupt is enabled.

-

Note

ESMSR2 is cleared after $\overline{\text{RST}}$. The flag in ESMSR2 gets cleared when reading the appropriate vector in the ESMIOFFHR offset register. Reading ESMIOFFHR will not clear the ESMSR1, ESMSR4, ESMSR7 and the shadow register ESMSSR2. Reading ESMIOFFLR will also not clear the ESMSR1, ESMSR4 and ESMSR7.

Copyright © 2025 Texas Instruments Incorporated

11.8.6.5.2 $\overline{\text{ERROR}}$ Pin Timing

The $\overline{\text{ERROR}}$ pin is an active low function. The state of the pin is also readable from $\overline{\text{ERROR}}$ Pin Status Register (ESMEPSR). A warm reset ($\overline{\text{RST}}$) does not affect the state of the pin. The pin is in a high-impedance state during power-on reset. Once the ESM module drives the $\overline{\text{ERROR}}$ pin low, it remains in this state for the time specified by the Low-Time Counter Preload register (LTCPR). Based on the time period of the peripheral clock (VCLK), the total active time of the $\overline{\text{ERROR}}$ pin can be calculated as:

$$t_{\overline{ERROR}_low} = t_{VCLK} \times (LTCP + 1) \quad (11)$$

Once this period expires, the $\overline{\text{ERROR}}$ pin is set to high in case the reset of the $\overline{\text{ERROR}}$ pin was requested. This request is done by writing an appropriate key (0x5) to the key register (ESMEKR) during the $\overline{\text{ERROR}}$ pin low time. Here are a few examples:

Example 1: ESM detects a failure and drives the $\overline{\text{ERROR}}$ pin low. No $\overline{\text{ERROR}}$ pin reset is requested. The $\overline{\text{ERROR}}$ pin continues outputting low until power on reset occurs.

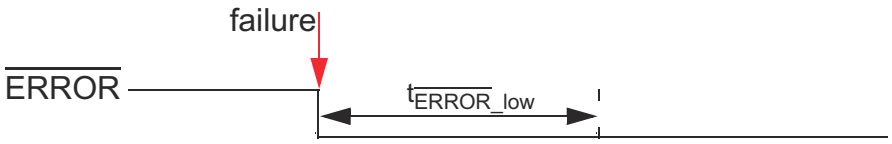

Figure 11-529. $\overline{\text{ERROR}}$ Pin Timing - Example 1

Example 2: ESM detects a failure and drives the $\overline{\text{ERROR}}$ pin low. An $\overline{\text{ERROR}}$ pin reset request is received before t $_{\overline{\text{ERROR}}_low}$ expires. In this case, the $\overline{\text{ERROR}}$ pin is set to high immediately after t $_{\overline{\text{ERROR}}_low}$ expires.

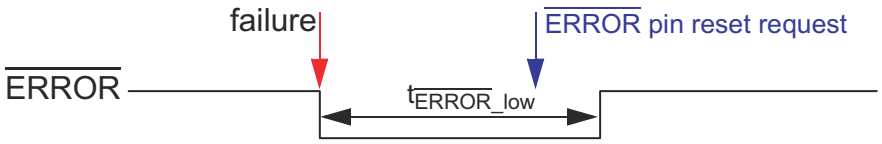

Figure 11-530. $\overline{\text{ERROR}}$ Pin Timing - Example 2

Example 3: ESM detects a failure and drives the $\overline{\text{ERROR}}$ pin low. An $\overline{\text{ERROR}}$ pin reset request is received after t $_{\overline{\text{ERROR}}_low}$ expires. In this case, the $\overline{\text{ERROR}}$ pin is set to high immediately after $\overline{\text{ERROR}}$ pin reset request is received.



Figure 11-531. $\overline{\text{ERROR}}$ Pin Timing - Example 3

Copyright © 2025 Texas Instruments Incorporated

Example 4: ESM detects a failure and drives the $\overline{\text{ERROR}}$ pin low. Another failure occurs within the time the pin stays low. In this case, the low time counter will be reset when the other failure occurs. In other words, $t_{\overline{\text{ERROR}}_low}$ should be counted from whenever the most recent failure occurs.

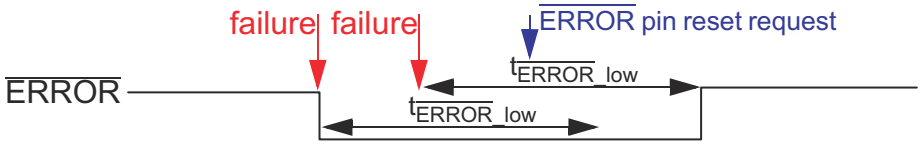

Figure 11-532. $\overline{\text{ERROR}}$ Pin Timing - Example 4

Example 5: The reset of the $\overline{\text{ERROR}}$ pin was requested by the software even before the failure occurs. In this case, the $\overline{\text{ERROR}}$ pin is set to high immediately after $t_{\overline{\text{ERROR}}_low}$ expires. This case is not recommended and should be avoided by the application.

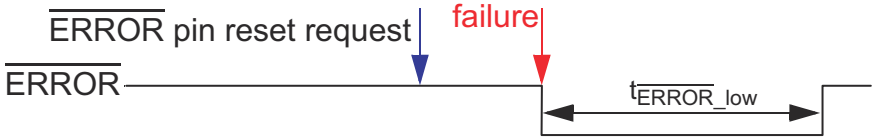

Figure 11-533. $\overline{\text{ERROR}}$ Pin Timing - Example 5

Copyright © 2025 Texas Instruments Incorporated

11.8.6.5.3 Forcing an Error Condition

The error response generation mechanism is testable by software by forcing an error condition. This allows testing the $\overline{\text{ERROR}}$ pin functionality. By writing a dedicated key to the error forcing key register (ESMEKR), the $\overline{\text{ERROR}}$ pin is set to low for the specified time. The following steps describe how to force an error condition:

1. Check $\overline{\text{ERROR}}$ Pin Status Register (ESMEPSR). This register must be 1 to switch into the error forcing mode. The ESM module cannot be switched into the error forcing mode if a failure has already been detected in functional mode. The application command to switch to error forcing mode is ignored.
2. Write “1010b” to the error forcing key register (ESMEKR). After that, the $\overline{\text{ERROR}}$ pin should output low (error force mode). Once the application puts the ESM module in the error forcing mode, the $\overline{\text{ERROR}}$ pin cannot indicate the normal error functionality. If a failure occurs during this time, it gets still latched and the LTC is reset and stopped. The error output pin is already driven low on account of the error forcing mode. When the ESM is forced back to normal functional mode, the LTC becomes active and forces the $\overline{\text{ERROR}}$ pin low until the expiration of the LTC.
3. Write “0000” to the error forcing key register (ESMEKR) back to the active normal mode. If there are no errors detected while the ESM module is in the error forcing mode, the $\overline{\text{ERROR}}$ pin goes high immediately after exiting the error forcing mode.

Copyright © 2025 Texas Instruments Incorporated

11.8.6.6 Recommended Programming Procedure

During the initialization stage, the application code should follow the recommendations in Figure 11-534 to initialize the ESM.

Once an error occurs, it can trigger an interrupt, $\overline{\text{ERROR}}$ pin outputs low depending on the ESM settings. Once the $\overline{\text{ERROR}}$ pin outputs low, a power on reset or a write of 0x5 to ESMEKR is required to release the ESM back to normal state. The application can read the error status registers (ESMSR1, ESMSR4, ESMSR7, ESMSR2, and ESMSR3) to debug the error. If an $\overline{\text{RST}}$ is triggered or the error interrupt has been served, the error flag of Group2 should be read from ESMSSR2 because the error flag in ESMSR2 will be cleared by $\overline{\text{RST}}$.

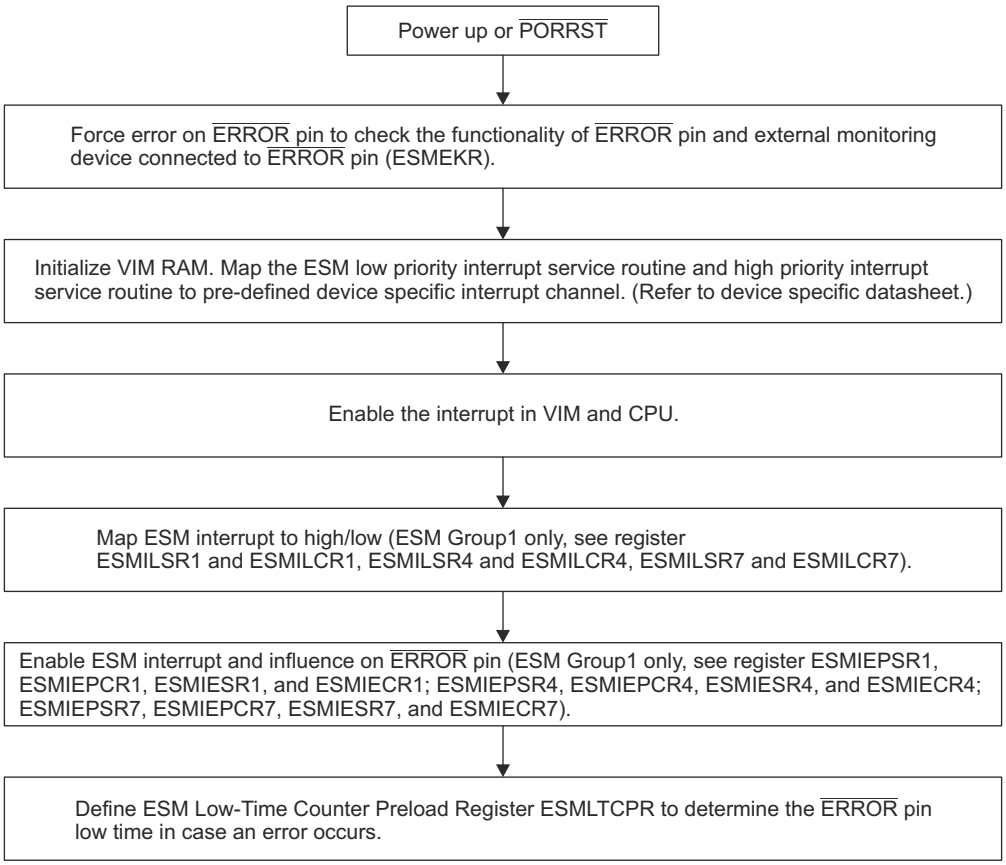

Figure 11-534. ESM Initialization

11.8.6.7 Main Subsystem ESM Interrupt Map

Table 11-1742. Main Subsystem ESM Interrupt Map

ESM Group	Define Name	Description
ESM GROUP1		
119:122	RESERVED	RESERVED
121	MSS_CR5B_AHB_WR_ERR	MSS_CR5B ahb brige getting write response as a error
120	MSS_CR5A_AHB_WR_ERR	MSS_CR5A ahb brige getting write response as a error
119	MSS_BUS_SAFETY_MSS2MDO	MSS Bus Safety Error for the Node MSSS_BUS_SAFETY_(X) - ECC Uncorrectable Data Error - Compare Error on Control
118	MSS_BUS_SAFETY_DMM_SLAVE	MSS Bus Safety Error for the Node MSSS_BUS_SAFETY_(X) - ECC Uncorrectable Data Error - Compare Error on Control
117	MSS_BUS_SAFETY_DMM_MST	MSS Bus Safety Error for the Node MSSS_BUS_SAFETY_(X) - ECC Uncorrectable Data Error - Compare Error on Control

Copyright © 2025 Texas Instruments Incorporated

Table 11-1742. Main Subsystem ESM Interrupt Map (continued)

ESM Group	Define Name	Description
ESM GROUP1		
116	MSS_BUS_SAFETY_GPADC	MSS Bus Safety Error for the Node MSSS_BUS_SAFETY_(X) - ECC Uncorrectable Data Error - Compare Error on Control
115	MSS_BUS_SAFETY_RET_RAM	MSS Bus Safety Error for the Node MSSS_BUS_SAFETY_(X) - ECC Uncorrectable Data Error - Compare Error on Control
114	MSS_BUS_SAFETY_MBOX	MSS Bus Safety Error for the Node MSSS_BUS_SAFETY_(X) - ECC Uncorrectable Data Error - Compare Error on Control
112 to 113	RESERVED	RESERVED
111	MSS_BUS_SAFETY_DTHE	MSS Bus Safety Error for the Node MSSS_BUS_SAFETY_(X) - ECC Uncorrectable Data Error - Compare Error on Control
110	MSS_BUS_SAFETY_HSM_SLAVE	MSS Bus Safety Error for the Node MSSS_BUS_SAFETY_(X) - ECC Uncorrectable Data Error - Compare Error on Control
108 to 109	RESERVED	RESERVED
107	MSS_BUS_SAFETY_MCRC	MSS Bus Safety Error for the Node MSSS_BUS_SAFETY_(X) - ECC Uncorrectable Data Error - Compare Error on Control
106	MSS_BUS_SAFETY_QSPI	MSS Bus Safety Error for the Node MSSS_BUS_SAFETY_(X) - ECC Uncorrectable Data Error - Compare Error on Control
105	MSS_BUS_SAFETY_SEC_TPTC_A1_WR	MSS Bus Safety Error for the Node MSSS_BUS_SAFETY_(X) - ECC Uncorrectable Data Error - Compare Error on Control
104	MSS_BUS_SAFETY_SEC_TPTC_A1_RD	MSS Bus Safety Error for the Node MSSS_BUS_SAFETY_(X) - ECC Uncorrectable Data Error - Compare Error on Control
103	MSS_BUS_SAFETY_SEC_TPTC_A0_WR	MSS Bus Safety Error for the Node MSSS_BUS_SAFETY_(X) - ECC Uncorrectable Data Error - Compare Error on Control
102	MSS_BUS_SAFETY_SEC_TPTC_A0_RD	MSS Bus Safety Error for the Node MSSS_BUS_SAFETY_(X) - ECC Uncorrectable Data Error - Compare Error on Control
101	MSS_BUS_SAFETY_TPTC_B0_WR	MSS Bus Safety Error for the Node MSSS_BUS_SAFETY_(X) - ECC Uncorrectable Data Error - Compare Error on Control
100	MSS_BUS_SAFETY_TPTC_A1_WR	MSS Bus Safety Error for the Node MSSS_BUS_SAFETY_(X) - ECC Uncorrectable Data Error - Compare Error on Control
99	MSS_BUS_SAFETY_TPTC_A0_WR	MSS Bus Safety Error for the Node MSSS_BUS_SAFETY_(X) - ECC Uncorrectable Data Error - Compare Error on Control
98	MSS_BUS_SAFETY_TPTC_B0_RD	MSS Bus Safety Error for the Node MSSS_BUS_SAFETY_(X) - ECC Uncorrectable Data Error - Compare Error on Control
97	MSS_BUS_SAFETY_TPTC_A1_RD	MSS Bus Safety Error for the Node MSSS_BUS_SAFETY_(X) - ECC Uncorrectable Data Error - Compare Error on Control
96	MSS_BUS_SAFETY_TPTC_A0_RD	MSS Bus Safety Error for the Node MSSS_BUS_SAFETY_(X) - ECC Uncorrectable Data Error - Compare Error on Control
95	MSS_BUS_SAFETY_CPSW	MSS Bus Safety Error for the Node MSSS_BUS_SAFETY_(X) - ECC Uncorrectable Data Error - Compare Error on Control
94	MSS_BUS_SAFETY_HSM_MST	MSS Bus Safety Error for the Node MSSS_BUS_SAFETY_(X) - ECC Uncorrectable Data Error - Compare Error on Control
93	MSS_BUS_SAFETY_DAP_RS232	MSS Bus Safety Error for the Node MSSS_BUS_SAFETY_(X) - ECC Uncorrectable Data Error - Compare Error on Control
92	MSS_BUS_SAFETY_CR5B_SLV	MSS Bus Safety Error for the Node MSSS_BUS_SAFETY_(X) - ECC Uncorrectable Data Error - Compare Error on Control
91	MSS_BUS_SAFETY_CR5A_SLV	MSS Bus Safety Error for the Node MSSS_BUS_SAFETY_(X) - ECC Uncorrectable Data Error - Compare Error on Control
87 to 90	RESERVED	RESERVED
86	MSS_MPU_MBOX_ADDR_ERR	MPU Addressing Error for MSS_MPU_(X)_ADDR_ERR
85	MSS_MPU_MBOX_PROT_ERR	MPU Protection Error for MSS_MPU_(X)_ADDR_ERR
84	MSS_MPU_L2_BANKA_ADDR_ERR	MPU Addressing Error for MSS_MPU_(X)_ADDR_ERR

Copyright © 2025 Texas Instruments Incorporated

Table 11-1742. Main Subsystem ESM Interrupt Map (continued)

ESM Group	Define Name	Description
ESM GROUP1		
83	MSS_MPU_L2_BANKA_PROT_ERR	MPU Protection Error for MSS_MPU_(X)_ADDR_ERR
82	MSS_MPU_L2_BANKB_ADDR_ERR	MPU Addressing Error for MSS_MPU_(X)_ADDR_ERR
81	MSS_MPU_L2_BANKB_PROT_ERR	MPU Protection Error for MSS_MPU_(X)_ADDR_ERR
80	MSS_MPU_DTHE_ADDR_ERR	MPU Addressing Error for MSS_MPU_(X)_ADDR_ERR
79	MSS_MPU_PCRA_ADDR_ERR	MPU Addressing Error for MSS_MPU_(X)_ADDR_ERR
78	MSS_MPU_QSPI_ADDR_ERR	MPU Addressing Error for MSS_MPU_(X)_ADDR_ERR
77	MSS_MPU_CR5A_SLV_ADDR_ERR	MPU Addressing Error for MSS_MPU_(X)_ADDR_ERR
76	MSS_MPU_CR5B_SLV_ADDR_ERR	MPU Addressing Error for MSS_MPU_(X)_ADDR_ERR
75	MSS_MPU_HSM_SLV_ADDR_ERR	MPU Addressing Error for MSS_MPU_(X)_ADDR_ERR
74	MSS_MPU_DTHE_PROT_ERR	MPU Protection Error for MSS_MPU_(X)_ADDR_ERR
73	MSS_MPU_PCRA_PROT_ERR	MPU Protection Error for MSS_MPU_(X)_ADDR_ERR
72	MSS_MPU_QSPI_PROT_ERR	MPU Protection Error for MSS_MPU_(X)_ADDR_ERR
71	MSS_MPU_CR5A_SLV_PROT_ERR	MPU Protection Error for MSS_MPU_(X)_ADDR_ERR
70	MSS_MPU_CR5B_SLV_PROT_ERR	MPU Protection Error for MSS_MPU_(X)_ADDR_ERR
69	MSS_MPU_HSM_SLV_PROT_ERR	MPU Protection Error for MSS_MPU_(X)_ADDR_ERR
68	MSS_CPSW_SERR	Cpsw memories Single bit error pulse
67	MSS_CPSW_UERR	Cpsw memories Double bit error pulse
66	MSS_BUS_SAFETY_SEC_AGG_ERR	Aggregated error for SEC from all Nodes in MSS_SCR
64 to 65	RESERVED	RESERVED
63	ANA_LIMP_MODE	Error signal from analog if the CLK monitor finds the REF CLK to be outside the permissible range of frequency
62	MSS_MCRC_ERR	MCRC Comparision Error
61	MSS_DCCA_ERR	DCCA frequency comparision error
60	MSS_DCCB_ERR	DCCB frequency comparision error
59	MSS_DCCC_ERR	DCCC frequency comparision error
58	MSS_DCCD_ERR	DCCD frequency comparision error
57	MSS_CCCA_ERR	CCCA frequency comparision error
56	MSS_CCCB_ERR	CCCB frequency comparision error
55	MSS_SPIA_SERR	Single Bit correctable error indication for MIBSPI-A multi-buffer
54	MSS_SPIB_SERR	Single Bit correctable error indication for MIBSPI-B multi-buffer
53	MSS_SPIA_UERR	Multi Bit uncorrectable error indication for MIBSPI-A muti-buffer
52	MSS_SPIB_UERR	Multi Bit uncorrectable error indication for MIBSPI-B muti-buffer
51	MSS_MCANA_SERR	Single Bit correctable error indication for MCANA Message Memory
50	MSS_MCANA_UERR	Multi Bit uncorrectable error indication for MCANA Message Memory
49	MSS_MCANA_TS_ERR	MCANA Timestamping Error
48	MSS_MCANB_SERR	Single Bit correctable error indication for MCANB Message Memory
47	MSS_MCANB_UERR	Multi Bit uncorrectable error indication for MCANB Message Memory
46	MSS_MCANB_TS_ERR	MCANB Timestamping Error

Copyright © 2025 Texas Instruments Incorporated

Table 11-1742. Main Subsystem ESM Interrupt Map (continued)

ESM Group	Define Name	Description
ESM GROUP1		
45	PAD_NERROR_IN	Nerror from PAD
44	MSS_TCMA_CR5A_SERR	Single Bit correctable error indication for ATCM of CR5A
43	MSS_TCMB1_CR5A_SERR	Single Bit correctable error indication for B1TCM of CR5A
42	MSS_TCMB0_CR5A_SERR	Single Bit correctable error indication for B0TCM of CR5A
41	MSS_TCMA_CR5B_SERR	Single Bit correctable error indication for ATCM of CR5B
40	MSS_TCMB1_CR5B_SERR	Single Bit correctable error indication for B1TCM of CR5B
39	MSS_TCMB0_CR5B_SERR	Single Bit correctable error indication for B0TCM of CR5B
38	MSS_CR5A_ITAG_SERR	Single Bit correctable error indication for Cache ITAG of CR5A
37	MSS_CR5A_IDATA_SERR	Single Bit correctable error indication for Cache IDATA of CR5A
36	MSS_CR5A_DTAG_SERR	Single Bit correctable error indication for Cache DTAG of CR5A
35	MSS_ CR5A _DDATA_ SERR	Single Bit correctable error indication for Cache DDATA of CR5A
34	MSS_CR5B_ITAG_SERR	Single Bit correctable error indication for Cache ITAG of CR5B
33	MSS_CR5B_IDATA_SERR	Single Bit correctable error indication for Cache IDATA of CR5B
32	MSS_CR5B_DTAG_SERR	Single Bit correctable error indication for Cache DTAG of CR5B
31	MSS_ CR5B _DDATA_ SERR	Single Bit correctable error indication for Cache DDATA of CR5B
30	MSS_TPCC_A_AGG_ERR	MSS_TPCC_A Aggregated Error Interrupt - TPCC Error - TPCC MPU Error - TPTC Error for all TPTCs connected to TPCC - Read and Write Config Space Access error to TPCC - Read and Write Config Space Access error or all TPTCs connected to TPCC
29	MSS_TPCC_B_AGG_ERR	MSS_TPCC_B Aggregated Error Interrupt - TPCC Error - TPCC MPU Error - TPTC Error for all TPTCs connected to TPCC - Read and Write Config Space Access error to TPCC - Read and Write Config Space Access error or all TPTCs connected to TPCC
28	RESERVED	RESERVED
27	EFUSE_ERR	Reserved for efuse errors
26	MSS_STC_ERR	STC Error indication for MSS Cortexr5ss
25	MSS_CCMR5_ST_ERR	CORTEXR5-Sub System Self test error for CCMR5 (comparator module)
24	RESERVED	RESERVED
23	QSPI_WR_ERR	QSPI write error
22	MSS_ECC_AGGR_CR5A_SERR	MSS ECC AGGR for CR5A Memories Correctbale Error- MSS_VIM_CR5A - MSS_CR5A_CACHES (only for injection. Error is sent out through event bus) - MSS_CR5A_TCMs (only for injection. Error is sent out through event bus)
21	RESERVED	RESERVED
20	MSS_ECC_AGGR_CR5B_SERR	MSS ECC AGGR for CR5B Memories Correctbale Error- MSS_VIM_CR5B - MSS_CR5B_CACHES (only for injection. Error is sent out through event bus) - MSS_CR5B_TCMs (only for injection. Error is sent out through event bus)
19	RESERVED	RESERVED
18	MSS_ECC_AGGR_SERR	MSS ECC AGGR Correctbale Error- MSS_L2_BANKA/B - MSS_MBOX - MSS_RETRAM- MSS_GPADC- MSS_TPTC_A0/1 FIFO - MSS_TPTC_B0 FIFO
17	MSS_ECC_AGGR_UERR	MSS ECC AGGR Un-Correctbale Error- MSS_L2_BANKA/B - MSS_MBOX - MSS_RETRAM- MSS_GPADC- MSS_TPTC_A0/1 FIFO - MSS_TPTC_B0 FIFO
14 to 16	RESERVED	RESERVED
13	DSS_ESM_LO	ESM IRQ from Gem
12	DSS_ESM_HI	ESM FIQ from Gem
2 to 11	RESERVED	RESERVED

Copyright © 2025 Texas Instruments Incorporated

Table 11-1742. Main Subsystem ESM Interrupt Map (continued)

ESM Group	Define Name	Description
ESM GROUP1		
1	HSM_ESM_LO	ESM IRQ from HSM
0	HSM_ESM_HI	ESM FIQ fromHSM
ESM GROUP2		
31 to 25	RESERVED	RESERVED
24	MSS_BUS_SAFETY_CR5A_MST_RD	MSS Bus Safety Error for the Node MSSS_BUS_SAFETY_(X) - ECC Uncorrectable Data Error - Compare Error on Control
23	MSS_BUS_SAFETY_CR5B_MST_RD	MSS Bus Safety Error for the Node MSSS_BUS_SAFETY_(X) - ECC Uncorrectable Data Error - Compare Error on Control
22	MSS_BUS_SAFETY_CR5A_MST_WR	MSS Bus Safety Error for the Node MSSS_BUS_SAFETY_(X) - ECC Uncorrectable Data Error - Compare Error on Control
21	MSS_BUS_SAFETY_CR5B_MST_WR	MSS Bus Safety Error for the Node MSSS_BUS_SAFETY_(X) - ECC Uncorrectable Data Error - Compare Error on Control
20	MSS_BUS_SAFETY_L2_BANKA	MSS Bus Safety Error for the Node MSSS_BUS_SAFETY_(X) - ECC Uncorrectable Data Error - Compare Error on Control
19	MSS_BUS_SAFETY_L2_BANKB	MSS Bus Safety Error for the Node MSSS_BUS_SAFETY_(X) - ECC Uncorrectable Data Error - Compare Error on Control
18	MSS_BUS_SAFETY_PCRA	MSS Bus Safety Error for the Node MSSS_BUS_SAFETY_(X) - ECC Uncorrectable Data Error - Compare Error on Control
17	MSS_BUS_SAFETY_PCRB	MSS Bus Safety Error for the Node MSSS_BUS_SAFETY_(X) - ECC Uncorrectable Data Error - Compare Error on Control
16	MSS_ECC_AGGR_CR5A_UERR	MSS ECC AGGR for CR5A Memories Un-Correctbale Error- MSS_VIM_CR5A - MSS_CR5A_CACHES (only for injection. Error is sent out through event bus) - MSS_CR5A_TCMs (only for injection. Error is sent out through event bus)
15	MSS_ECC_AGGR_CR5B_UERR	MSS ECC AGGR for CR5A Memories Un-Correctbale Error- MSS_VIM_CR5A - MSS_CR5A_CACHES (only for injection. Error is sent out through event bus) - MSS_CR5A_TCMs (only for injection. Error is sent out through event bus)
14	MSS_L2_BANKA_ECC_UERR	MSS_L2_BANKA Uncorrectable ECC Error
13	MSS_L2_BANKB_ECC_UERR	MSS_L2_BANKB Uncorrectable ECC Error
12	VIM_LOCK_ERR	MSS_VIM lock step compare error
11	MSS_WDT_NMI	MSS Watch dog timer non maskable irq
10	MSS_CR5A_LIVELOCK	MSS_CR5A in live lock due to fatal errors
9	MSS_CR5B_LIVELOCK	MSS_CR5B in live lock due to fatal errors
8	MSS_TCMB1_CR5B_PARITY_ERR	Parity Error on Control signals for B1TCM of CR5B
7	MSS_TCMB0_CR5B_PARITY_ERR	Parity Error on Control signals for B0TCM of CR5B
6	MSS_TCMA_CR5B_PARITY_ERR	Parity Error on Control signals for ATCM of CR5B
5	MSS_TCMB1_CR5A_PARITY_ERR	Parity Error on Control signals for B1TCM of CR5A
4	MSS_TCMB0_CR5A_PARITY_ERR	Parity Error on Control signals for B0TCM of CR5A
3	MSS_TCMA_CR5A_PARITY_ERR	Parity Error on Control signals for ATCM of CR5A
2	MSS_CCMR5_ERR	Lock step Comparision Error from CCMR5
1	DSS_ESM_HI	ESM FIQ from DSP
0	HSM_ESM_HI	ESM FIQ from HSM

Table 11-1743. MSS ESM Group3 Interrupt Map

ESM GROUP3	Define Name	Description
31	RESERVED	RESERVED
30	RESERVED	RESERVED
29	MSS_CR5B_DDATA_UERR	Dcache data multibit error from CR5B

Copyright © 2025 Texas Instruments Incorporated

Table 11-1743. MSS ESM Group3 Interrupt Map (continued)

ESM GROUP3	Define Name	Description
28	RESERVED	RESERVED
27	MSS_CR5B_DTAG_UERR	Dcache tag multibit error from CR5B
26	RESERVED	RESERVED
25	RESERVED	RESERVED
24	RESERVED	RESERVED
23	RESERVED	RESERVED
22	RESERVED	RESERVED
21	MSS_CR5A_DDATA_UERR	Dcache data multibit error from CR5A
20	RESERVED	RESERVED
19	MSS_CR5A_DTAG_UERR	Dcache tag multibit error from CR5A
18	RESERVED	RESERVED
17	RESERVED	RESERVED
16	RESERVED	RESERVED
15	RESERVED	RESERVED
14	RESERVED	RESERVED
13	MSS_TCMA_CR5B_UERR	Multi Bit Error in ATCM of CR5B
12	RESERVED	RESERVED
11	MSS_TCMB1_CR5B_UERR	Multi Bit Error in B1TCM of CR5B
10	RESERVED	RESERVED
9	MSS_TCMB0_CR5B_UERR	Multi Bit Error in B0TCM of CR5B
8	RESERVED	RESERVED
7	MSS_TCMA_CR5A_UERR	Multi Bit Error in ATCM of CR5A
6	RESERVED	RESERVED
5	MSS_TCMB1_CR5A_UERR	Multi Bit Error in B1TCM of CR5A
4	RESERVED	RESERVED
3	MSS_TCMB0_CR5A_UERR	Multi Bit Error in B0TCM of CR5A
2	RESERVED	RESERVED
1	EFUSE_AUTOLOAD_ERR	Reserved for efuse autoload error
0	RESERVED	RESERVED

11.8.6.8 DSP Subsystem ESM Interrupt Map

Table 11-1744. DSP Subsystem ESM Interrupt Map

ESM GROUP3	Define Name	Description
None		
ESM GROUP2	**Define Name**	**Description**
0	DSS_WDT_NMI_REQ	DSS_WDT Non Maskable Interrupt
1	DSS_DCCA_ERR	DSS_DCCA Error
2	DSS_DCCB_ERR	DSS_DCCB Error
3	DSS_HWA_GRP2_ERR	DSS HWA Group 2 Errors. - Parity error for any local memory banks (8 banks each of 16KB memory) - Parity error for Windowing RAM - HWA FSM lockstep error
ESM GROUP1	**Define Name**	**Description**
0	DSS_TPCC_A_ERRAGG	DSS_TPCC_A Aggregated Error Interrupt - TPCC Error - TPCC MPU Error - TPTC Error for all TPTCs connected to TPCC - Read and Write Config Space Access error to TPCC - Read and Write Config Space Access error or all TPTCs connected to TPCC

Copyright © 2025 Texas Instruments Incorporated

Table 11-1744. DSP Subsystem ESM Interrupt Map (continued)

ESM GROUP3	Define Name	Description
1	DSS_TPCC_B_ERRAGG	DSS_TPCC_B Aggregated Error Interrupt - TPCC Error - TPCC MPU Error - TPTC Error for all TPTCs connected to TPCC - Read and Write Config Space Access error to TPCC - Read and Write Config Space Access error or all TPTCs connected to TPCC
2	DSS_TPCC_C_ERRAGG	DSS_TPCC_C Aggregated Error Interrupt - TPCC Error - TPCC MPU Error - TPTC Error for all TPTCs connected to TPCC - Read and Write Config Space Access error to TPCC - Read and Write Config Space Access error or all TPTCs connected to TPCC
3	RESERVED	
4	RESERVED	
5	RESERVED	
6	RESERVED	
7	RESERVED	
8	RESERVED	
9	RESERVED	
10	DSS_DSP_STC_ERR	DSS_DSP_STC Error
11	DSS_CBUFF_SBE_ERR	DSS_CBUFF FIFO Single Bit error
12	DSS_CBUFF_DBE_ERR	DSS_CBUFF FIFO Double Bit error
13	DSS_CBUFF_SAFETY_ERR	DSS_CBUFF Safety error
14	DSS_DSP_PBIST_ERR	DSS_DSP PBIST Error
15	DSS_BUS_SAFETY_SEC_ERRAGG	DSS Bus Safety Single Error Correction Error Aggregated Interrupt.SW must read the register DSS_CTRL:DSS_BUS_SAFETY_SEC_ERR_STAT0 and DSS_CTRL:DSS_BUS_SAFETY_SEC_ERR_STAT1
16	RCSS_SPIA_SBE_ERR	RCSS_SPIA Single Bit Error
17	RCSS_SPIA_UERR	RCSS_SPIA Uncorrectable Error
18	RCSS_SPIB_SBE_ERR	RCSS_SPIB Single Bit Error
19	RCSS_SPIB_UERR	RCSS_SPIB Uncorrectable Error
20	RCSS_BUS_SAFETY_SEC_ERRAGG	RCSS Bus Safety Single Error Correction Error Aggregated Interrupt.SW must read the register RCSS_CTRL:RCSS_BUS_SAFETY_SEC_ERR_STAT0
21	RCSS_BUS_SAFETY_TPTC_A0_RD	RCSS Bus Safety Error for the Node RCSS_BUS_SAFETY_(X) - ECC Uncorrectable Data Error - Compare Error on Control
22	RCSS_BUS_SAFETY_TPTC_A1_RD	RCSS Bus Safety Error for the Node RCSS_BUS_SAFETY_(X) - ECC Uncorrectable Data Error - Compare Error on Control
23	RCSS_BUS_SAFETY_TPTC_A0_WR	RCSS Bus Safety Error for the Node RCSS_BUS_SAFETY_(X) - ECC Uncorrectable Data Error - Compare Error on Control
24	RCSS_BUS_SAFETY_TPTC_A1_WR	RCSS Bus Safety Error for the Node RCSS_BUS_SAFETY_(X) - ECC Uncorrectable Data Error - Compare Error on Control
25	RCSS_BUS_SAFETY_CSI2A_MDMA	RCSS Bus Safety Error for the Node RCSS_BUS_SAFETY_(X) - ECC Uncorrectable Data Error - Compare Error on Control
26	RCSS_BUS_SAFETY_CSI2B_MDMA	RCSS Bus Safety Error for the Node RCSS_BUS_SAFETY_(X) - ECC Uncorrectable Data Error - Compare Error on Control
27	RESERVED	
28	RESERVED	
29	RESERVED	
30	RCSS_BUS_SAFETY_MCASPA	RCSS Bus Safety Error for the Node RCSS_BUS_SAFETY_(X) - ECC Uncorrectable Data Error - Compare Error on Control
31	RCSS_BUS_SAFETY_MCASPB	RCSS Bus Safety Error for the Node RCSS_BUS_SAFETY_(X) - ECC Uncorrectable Data Error - Compare Error on Control

Copyright © 2025 Texas Instruments Incorporated

Table 11-1744. DSP Subsystem ESM Interrupt Map (continued)

ESM GROUP3	Define Name	Description
32	MPU_DSS_L3_BANKA_ADDR_ERR	MPU Addressing Error for DSS_(X)_MPU_ADDR_ERR
33	MPU_DSS_L3_BANKB_ADDR_ERR	MPU Addressing Error for DSS_(X)_MPU_ADDR_ERR
34	MPU_DSS_L3_BANKC_ADDR_ERR	MPU Addressing Error for DSS_(X)_MPU_ADDR_ERR
35	MPU_DSS_L3_BANKD_ADDR_ERR	MPU Addressing Error for DSS_(X)_MPU_ADDR_ERR
36	MPU_DSS_HWA_DMA0_ADDR_ERR	MPU Addressing Error for DSS_(X)_MPU_ADDR_ERR
37	MPU_DSS_HWA_DMA1_ADDR_ERR	MPU Addressing Error for DSS_(X)_MPU_ADDR_ERR
38	MPU_DSS_HWA_PROC_ADDR_ERR	MPU Addressing Error for DSS_(X)_MPU_ADDR_ERR
39	MPU_DSS_MBOX_MPU_ADDR_ERR	MPU Addressing Error for DSS_(X)_MPU_ADDR_ERR
40	MPU_DSS_L3_BANKA_PROT_ERR	MPU Protection Error for DSS_(X)_MPU_PROT_ERR
41	MPU_DSS_L3_BANKB_PROT_ERR	MPU Protection Error for DSS_(X)_MPU_PROT_ERR
42	MPU_DSS_L3_BANKC_PROT_ERR	MPU Protection Error for DSS_(X)_MPU_PROT_ERR
43	MPU_DSS_L3_BANKD_PROT_ERR	MPU Protection Error for DSS_(X)_MPU_PROT_ERR
44	MPU_DSS_HWA_DMA0_PROT_ERR	MPU Protection Error for DSS_(X)_MPU_PROT_ERR
45	MPU_DSS_HWA_DMA1_PROT_ERR	MPU Protection Error for DSS_(X)_MPU_PROT_ERR
46	MPU_DSS_HWA_PROC_PROT_ERR	MPU Protection Error for DSS_(X)_MPU_PROT_ERR
47	MPU_DSS_MBOX_MPU_PROT_ERR	MPU Protection Error for DSS_(X)_MPU_PROT_ERR
48	DSS_BUS_SAFETY_DSP_MDMA	DSS Bus Safety Error for the Node RCSS_BUS_SAFETY_(X) - ECC Uncorrectable Data Error - Compare Error on Control
49	DSS_BUS_SAFETY_L3_BANKA	DSS Bus Safety Error for the Node RCSS_BUS_SAFETY_(X) - ECC Uncorrectable Data Error - Compare Error on Control
50	DSS_BUS_SAFETY_L3_BANKB	DSS Bus Safety Error for the Node RCSS_BUS_SAFETY_(X) - ECC Uncorrectable Data Error - Compare Error on Control
51	DSS_BUS_SAFETY_L3_BANKC	DSS Bus Safety Error for the Node RCSS_BUS_SAFETY_(X) - ECC Uncorrectable Data Error - Compare Error on Control
52	DSS_BUS_SAFETY_L3_BANKD	DSS Bus Safety Error for the Node RCSS_BUS_SAFETY_(X) - ECC Uncorrectable Data Error - Compare Error on Control
53	DSS_BUS_SAFETY_DSP_SDMA	DSS Bus Safety Error for the Node RCSS_BUS_SAFETY_(X) - ECC Uncorrectable Data Error - Compare Error on Control
54	DSS_BUS_SAFETY_TPTC_A0_RD	DSS Bus Safety Error for the Node RCSS_BUS_SAFETY_(X) - ECC Uncorrectable Data Error - Compare Error on Control
55	DSS_BUS_SAFETY_TPTC_A1_RD	DSS Bus Safety Error for the Node RCSS_BUS_SAFETY_(X) - ECC Uncorrectable Data Error - Compare Error on Control
56	DSS_BUS_SAFETY_TPTC_B0_RD	DSS Bus Safety Error for the Node RCSS_BUS_SAFETY_(X) - ECC Uncorrectable Data Error - Compare Error on Control
57	DSS_BUS_SAFETY_TPTC_B1_RD	DSS Bus Safety Error for the Node RCSS_BUS_SAFETY_(X) - ECC Uncorrectable Data Error - Compare Error on Control

Copyright © 2025 Texas Instruments Incorporated

Table 11-1744. DSP Subsystem ESM Interrupt Map (continued)

ESM GROUP3	Define Name	Description
58	DSS_BUS_SAFETY_TPTC_C0_RD	DSS Bus Safety Error for the Node RCSS_BUS_SAFETY_(X) - ECC Uncorrectable Data Error - Compare Error on Control
59	DSS_BUS_SAFETY_TPTC_C1_RD	DSS Bus Safety Error for the Node RCSS_BUS_SAFETY_(X) - ECC Uncorrectable Data Error - Compare Error on Control
60	DSS_BUS_SAFETY_TPTC_C2_RD	DSS Bus Safety Error for the Node RCSS_BUS_SAFETY_(X) - ECC Uncorrectable Data Error - Compare Error on Control
61	DSS_BUS_SAFETY_TPTC_C3_RD	DSS Bus Safety Error for the Node RCSS_BUS_SAFETY_(X) - ECC Uncorrectable Data Error - Compare Error on Control
62	DSS_BUS_SAFETY_TPTC_C4_RD	DSS Bus Safety Error for the Node RCSS_BUS_SAFETY_(X) - ECC Uncorrectable Data Error - Compare Error on Control
63	DSS_BUS_SAFETY_TPTC_C5_RD	DSS Bus Safety Error for the Node RCSS_BUS_SAFETY_(X) - ECC Uncorrectable Data Error - Compare Error on Control
64	DSS_BUS_SAFETY_TPTC_A0_WR	DSS Bus Safety Error for the Node RCSS_BUS_SAFETY_(X) - ECC Uncorrectable Data Error - Compare Error on Control
65	DSS_BUS_SAFETY_TPTC_A1_WR	DSS Bus Safety Error for the Node RCSS_BUS_SAFETY_(X) - ECC Uncorrectable Data Error - Compare Error on Control
66	DSS_BUS_SAFETY_TPTC_B0_WR	DSS Bus Safety Error for the Node RCSS_BUS_SAFETY_(X) - ECC Uncorrectable Data Error - Compare Error on Control
67	DSS_BUS_SAFETY_TPTC_B1_WR	DSS Bus Safety Error for the Node RCSS_BUS_SAFETY_(X) - ECC Uncorrectable Data Error - Compare Error on Control
68	DSS_BUS_SAFETY_TPTC_C0_WR	DSS Bus Safety Error for the Node RCSS_BUS_SAFETY_(X) - ECC Uncorrectable Data Error - Compare Error on Control
69	DSS_BUS_SAFETY_TPTC_C1_WR	DSS Bus Safety Error for the Node RCSS_BUS_SAFETY_(X) - ECC Uncorrectable Data Error - Compare Error on Control
70	DSS_BUS_SAFETY_TPTC_C2_WR	DSS Bus Safety Error for the Node RCSS_BUS_SAFETY_(X) - ECC Uncorrectable Data Error - Compare Error on Control
71	DSS_BUS_SAFETY_TPTC_C3_WR	DSS Bus Safety Error for the Node RCSS_BUS_SAFETY_(X) - ECC Uncorrectable Data Error - Compare Error on Control
72	DSS_BUS_SAFETY_TPTC_C4_WR	DSS Bus Safety Error for the Node RCSS_BUS_SAFETY_(X) - ECC Uncorrectable Data Error - Compare Error on Control
73	DSS_BUS_SAFETY_TPTC_C5_WR	DSS Bus Safety Error for the Node RCSS_BUS_SAFETY_(X) - ECC Uncorrectable Data Error - Compare Error on Control
74	DSS_BUS_SAFETY_CMC_COMP	DSS Bus Safety Error for the Node RCSS_BUS_SAFETY_(X) - ECC Uncorrectable Data Error - Compare Error on Control
75	DSS_BUS_SAFETY_MCRC	DSS Bus Safety Error for the Node RCSS_BUS_SAFETY_(X) - ECC Uncorrectable Data Error - Compare Error on Control
76	DSS_BUS_SAFETY_PCR	DSS Bus Safety Error for the Node RCSS_BUS_SAFETY_(X) - ECC Uncorrectable Data Error - Compare Error on Control
77	DSS_BUS_SAFETY_CBUFF	DSS Bus Safety Error for the Node RCSS_BUS_SAFETY_(X) - ECC Uncorrectable Data Error - Compare Error on Control
78	DSS_BUS_SAFETY_HWA_DMA0	DSS Bus Safety Error for the Node RCSS_BUS_SAFETY_(X) - ECC Uncorrectable Data Error - Compare Error on Control
79	DSS_BUS_SAFETY_HWA_DMA1	DSS Bus Safety Error for the Node RCSS_BUS_SAFETY_(X) - ECC Uncorrectable Data Error - Compare Error on Control
80	DSS_BUS_SAFETY_HWA_PROCM	DSS Bus Safety Error for the Node RCSS_BUS_SAFETY_(X) - ECC Uncorrectable Data Error - Compare Error on Control
81	DSS_BUS_SAFETY_HWA_PROCS	DSS Bus Safety Error for the Node RCSS_BUS_SAFETY_(X) - ECC Uncorrectable Data Error - Compare Error on Control
82	DSS_BUS_SAFETY_MBOX	DSS Bus Safety Error for the Node RCSS_BUS_SAFETY_(X) - ECC Uncorrectable Data Error - Compare Error on Control
83	RCSS_BUS_SAFETY_MCASPC	RCSS Bus Safety Error for the Node RCSS_BUS_SAFETY_(X) - ECC Uncorrectable Data Error - Compare Error on Control

Copyright © 2025 Texas Instruments Incorporated

Table 11-1744. DSP Subsystem ESM Interrupt Map (continued)

ESM GROUP3	Define Name	Description
84	RCSS_BUS_SAFETY_PCR	RCSS Bus Safety Error for the Node RCSS_BUS_SAFETY_(X) - ECC Uncorrectable Data Error - Compare Error on Control
85	RCSS_TPCC_A_ERRAGG	RCSS_TPCC_A Aggregated Error Interrupt - TPCC Error - TPCC MPU Error - TPTC Error for all TPTCs connected to TPCC - Read and Write Config Space Access error to TPCC - Read and Write Config Space Access error or all TPTCs connected to TPCC
86	RCSS_SCIA_ERR	RCSS_SCIA Error Interrupt
87	RCSS_CSI2A_CTX_MEM_PARITY_ERR	RCSS CSI2A CTX Memory Parity Error
88	RCSS_CSI2A_FIFO_MEM_PARITY_ERR	RCSS CSI2A FIFO Memory Parity Error
89	RCSS_CSI2B_CTX_MEM_PARITY_ERR	RCSS CSI2B CTX Memory Parity Error
90	RCSS_CSI2B_FIFO_MEM_PARITY_ERR	RCSS CSI2B FIFO Memory Parity Error
91	DSS_ECC_AGGR_UERR	DSS ECC AGGR Un-Correctbale Error - DSS_MBOX - DSS_L3_BANKA/B/C/D - DSS_TPTC_A0/1 FIFO - DSS_TPTC_B0/1 FIFO - DSS_TPTC_C0/1/2/3/4/5 FIFO- RCSS_TPTC_A0/1
92	DSS_ECC_AGGR_SERR	DSS ECC AGGR Correctbale Error - DSS_MBOX - DSS_L3_BANKA/B/C/D - DSS_TPTC_A0/1 FIFO - DSS_TPTC_B0/1 FIFO - DSS_TPTC_C0/1/2/3/4/5 FIFO- RCSS_TPTC_A0/1
93	DSS_HWA_GRP1_ERR	NU
94	Reserved	
95	Reserved	
96	Reserved	
97	DSS_L3_BANKA_ECC_UERR	DSS_L3_BANKA Uncorrectable ECC Error
98	DSS_L3_BANKB_ECC_UERR	DSS_L3_BANKB Uncorrectable ECC Error
99	DSS_L3_BANKC_ECC_UERR	DSS_L3_BANKC Uncorrectable ECC Error
100	DSS_L3_BANKD_ECC_UERR	DSS_L3_BANKD Uncorrectable ECC Error

Copyright © 2025 Texas Instruments Incorporated

11.8.6.9 MSS_ESM Registers

Table 11-1745 lists the memory-mapped registers for the MSS_ESM. To determine the base address, refer to the device-specific memory map. The address locations not listed are reserved.

Table 11-1745. MSS_ESM Registers

Offset	Acronym	Register Name	Section
0h	ESMIEPSR1	ESM Enable ERROR Pin Action/Response Register 1	Section 12.8.6.9.1
4h	ESMIEPCR1	ESM Disable ERROR Pin Action/Response Register 1	Section 12.8.6.9.2
8h	ESMIESR1	ESM Interrupt Enable Set/Status Register 1	Section 12.8.6.9.3
Ch	ESMIECR1	ESM Interrupt Enable Clear/Status Register 1	Section 12.8.6.9.4
10h	ESMILSR1	Interrupt Level Set/Status Register 1	Section 12.8.6.9.5
14h	ESMILCR1	Interrupt Level Clear/Status Register 1	Section 12.8.6.9.6
18h	ESMSR1	ESM Status Register 1	Section 12.8.6.9.7
1Ch	ESMSR2	ESM Status Register 2	Section 12.8.6.9.8
20h	ESMSR3	ESM Status Register 3	Section 12.8.6.9.9
24h	ESMEPSR	ESM ERROR Pin Status Register	Section 12.8.6.9.10
28h	ESMIOFFHR	ESM Interrupt Offset High Register	Section 12.8.6.9.11
2Ch	ESMIOFFLR	ESM Interrupt Offset Low Register	Section 12.8.6.9.12
30h	ESMLTCR	ESM Low-Time Counter Register	Section 12.8.6.9.13
34h	ESMLTCPR	ESM Low-Time Counter Preload Register	Section 12.8.6.9.14
38h	ESMEKR	ESM Error Key Register	Section 12.8.6.9.15
3Ch	ESMSSR2	ESM Status Shadow Register 2	Section 12.8.6.9.16
40h	ESMIEPSR4	ESM Enable ERROR Pin Action/Response Register 4	Section 12.8.6.9.17
44h	ESMIEPCR4	ESM Disable ERROR Pin Action/Response Register 4	Section 12.8.6.9.18
48h	ESMIESR4	ESM Interrupt Enable Set/Status Register 4	Section 12.8.6.9.19
4Ch	ESMIECR4	ESM Interrupt Enable Clear/Status Register 4	Section 12.8.6.9.20
50h	ESMILSR4	Interrupt Level Set/Status Register 4	Section 12.8.6.9.21
54h	ESMILCR4	Interrupt Level Clear/Status Register 4	Section 12.8.6.9.22
58h	ESMSR4	ESM Status Register 4	Section 12.8.6.9.23
80h	ESMIEPSR7	ESM Enable ERROR Pin Action/Response Register 7	Section 12.8.6.9.24
84h	ESMIEPCR7	ESM Disable ERROR Pin Action/Response Register 7	Section 12.8.6.9.25
88h	ESMIESR7	ESM Interrupt Enable Set/Status Register 7	Section 12.8.6.9.26
8Ch	ESMIECR7	ESM Interrupt Enable Clear/Status Register 7	Section 12.8.6.9.27
90h	ESMILSR7	Interrupt Level Set/Status Register 7	Section 12.8.6.9.28
94h	ESMILCR7	Interrupt Level Clear/Status Register 7	Section 12.8.6.9.29
98h	ESMSR7	ESM Status Register 7	Section 12.8.6.9.30

Complex bit access types are encoded to fit into small table cells. Table 11-1746 shows the codes that are used for access types in this section.

Table 11-1746. MSS_ESM Access Type Codes

Access Type	Code	Description
Read Type		
R	R	Read
Write Type		
W	W	Write
Reset or Default Value		

Copyright © 2025 Texas Instruments Incorporated

Table 11-1746. MSS_ESM Access Type Codes (continued)

Access Type	Code	Description
-n		Value after reset or the default value

Copyright © 2025 Texas Instruments Incorporated

11.8.6.9.1 ESMIEPSR1 Register (Offset = 0h) [reset = 0h]

ESMIEPSR1 is shown in Figure 11-535 and described in Table 11-1747.

Return to Summary Table.

ESM Enable ERROR Pin Action/Response Register 1

Figure 11-535. ESMIEPSR1 Register

31	30	29	28	27	26	25	24	23	22	21	20	19	18	17	16	15	14	13	12	11	10	9	8	7	6	5	4	3	2	1	0
IEPSET																															
R/W-0h																															

Table 11-1747. ESMIEPSR1 Register Field Descriptions

Bit	Field	Type	Reset	Description
31-0	IEPSET	R/W	0h	Enable ERROR Pin Action/Response on Group 1. Read in User and Privileged mode. Write in Privileged mode only. 0 Read: Failure on channel x has no influence on ERROR pin. Write: Leaves the bit and the corresponding clear bit in the ESMIEPCR1 register unchanged. 1 Read: Failure on channel x has influence on ERROR pin. Write: Enables failure influence on ERROR pin and sets the corresponding clear bit in the ESMIEPCR1 register.

Copyright © 2025 Texas Instruments Incorporated

11.8.6.9.2 ESMIEPCR1 Register (Offset = 4h) [reset = 0h]

ESMIEPCR1 is shown in Figure 11-536 and described in Table 11-1748.

Return to Summary Table.

ESM Disable ERROR Pin Action/Response Register 1

Figure 11-536. ESMIEPCR1 Register

31	30	29	28	27	26	25	24	23	22	21	20	19	18	17	16	15	14	13	12	11	10	9	8	7	6	5	4	3	2	1	0
IEPCLR																															
R/W-0h																															

Table 11-1748. ESMIEPCR1 Register Field Descriptions

Bit	Field	Type	Reset	Description
31-0	IEPCLR	R/W	0h	Disable ERROR Pin Action/Response on Group 1. Read in User and Privileged mode. Write in Privileged mode only. 0 Read: Failure on channel x has no influence on ERROR pin. Write: Leaves the bit and the corresponding set bit in the ESMIEPSR1 register unchanged. 1 Read: Failure on channel x has influence on ERROR pin. Write: Disables failure influence on ERROR pin and clears the corresponding set bit in the ESMIEPSR1 register.

Copyright © 2025 Texas Instruments Incorporated

11.8.6.9.3 ESMIESR1 Register (Offset = 8h) [reset = 0h]

ESMIESR1 is shown in Figure 11-537 and described in Table 11-1749.

Return to Summary Table.

ESM Interrupt Enable Set/Status Register 1

Figure 11-537. ESMIESR1 Register

31	30	29	28	27	26	25	24	23	22	21	20	19	18	17	16	15	14	13	12	11	10	9	8	7	6	5	4	3	2	1	0
INTENSET																															
R/W-0h																															

Table 11-1749. ESMIESR1 Register Field Descriptions

Bit	Field	Type	Reset	Description
31-0	INTENSET	R/W	0h	Set interrupt Enable Read in User and Privileged mode. Write in Privileged mode only. 0 Read: Interrupt is disabled. Write: Leaves the bit and the corresponding clear bit in the ESMIECR1 register unchanged. 1 Read: Interrupt is enabled. Write: Enables interrupt and sets the corresponding clear bit in the ESMIECR1 register.

Copyright © 2025 Texas Instruments Incorporated

11.8.6.9.4 ESMIECR1 Register (Offset = Ch) [reset = 0h]

ESMIECR1 is shown in Figure 11-538 and described in Table 11-1750.

Return to Summary Table.

ESM Interrupt Enable Clear/Status Register 1

Figure 11-538. ESMIECR1 Register

31	30	29	28	27	26	25	24	23	22	21	20	19	18	17	16	15	14	13	12	11	10	9	8	7	6	5	4	3	2	1	0
INTENCLR																															
R/W-0h																															

Table 11-1750. ESMIECR1 Register Field Descriptions

Bit	Field	Type	Reset	Description
31-0	INTENCLR	R/W	0h	Clear Interrupt Enable Read in User and Privileged mode. Write in Privileged mode only. 0 Read: Interrupt is disabled. Write: Leaves the bit and the corresponding set bit in the ESMIESR1 register unchanged. 1 Read: Interrupt is enabled. Write: Disables interrupt and clears the corresponding set bit in the ESMIESR1 register.

Copyright © 2025 Texas Instruments Incorporated

11.8.6.9.5 ESMILSR1 Register (Offset = 10h) [reset = 0h]

ESMILSR1 is shown in Figure 11-539 and described in Table 11-1751.

Return to Summary Table.

Interrupt Level Set/Status Register 1

Figure 11-539. ESMILSR1 Register

31	30	29	28	27	26	25	24	23	22	21	20	19	18	17	16	15	14	13	12	11	10	9	8	7	6	5	4	3	2	1	0
INTLVLSET																															
R/W-0h																															

Table 11-1751. ESMILSR1 Register Field Descriptions

Bit	Field	Type	Reset	Description
31-0	INTLVLSET	R/W	0h	Set Interrupt Priority Read in User and Privileged mode. Write in Privileged mode only. 0 Read: Interrupt of channel x is mapped to low level interrupt line. Write: Leaves the bit and the corresponding clear bit in the ESMILCR1 register unchanged. 1 Read: Interrupt of channel x is mapped to high level interrupt line. Write: Maps interrupt of channel x to high level interrupt line and sets the corresponding clear bit in the ESMILCR1 register.

Copyright © 2025 Texas Instruments Incorporated

11.8.6.9.6 ESMILCR1 Register (Offset = 14h) [reset = 0h]

ESMILCR1 is shown in Figure 11-540 and described in Table 11-1752.

Return to Summary Table.

Interrupt Level Clear/Status Register 1

Figure 11-540. ESMILCR1 Register

31	30	29	28	27	26	25	24	23	22	21	20	19	18	17	16	15	14	13	12	11	10	9	8	7	6	5	4	3	2	1	0
INTLVLCLR																															
R/W-0h																															

Table 11-1752. ESMILCR1 Register Field Descriptions

Bit	Field	Type	Reset	Description
31-0	INTLVLCLR	R/W	0h	Clear Interrupt Priority. Read in User and Privileged mode. Write in Privileged mode only. 0 Read: Interrupt of channel x is mapped to low level interrupt line. Write: Leaves the bit and the corresponding set bit in the ESMILSR1 register unchanged. 1 Read: Interrupt of channel x is mapped to high level interrupt line. Write: Maps interrupt of channel x to low level interrupt line and clears the corresponding set bit in the ESMILSR1 register.

Copyright © 2025 Texas Instruments Incorporated

11.8.6.9.7 ESMSR1 Register (Offset = 18h) [reset = 0h]

ESMSR1 is shown in Figure 11-541 and described in Table 11-1753.

Return to Summary Table.

ESM Status Register 1

Figure 11-541. ESMSR1 Register

31	30	29	28	27	26	25	24	23	22	21	20	19	18	17	16	15	14	13	12	11	10	9	8	7	6	5	4	3	2	1	0
ESF																															
R/W-0h																															

Table 11-1753. ESMSR1 Register Field Descriptions

Bit	Field	Type	Reset	Description
31-0	ESF	R/W	0h	Error Status Flag. Provides status information on a pending error. Read in User and Privileged mode. Write in Privileged mode only. 0 Read: No error occurred; no interrupt is pending. Write: Leaves the bit unchanged. 1 Read: Error occurred; interrupt is pending. Write: Clears the bit. Note: After nRST, if one of these flags are set and the corresponding interrupt are enabled, the interrupt service routine will be called.

Copyright © 2025 Texas Instruments Incorporated

11.8.6.9.8 ESMSR2 Register (Offset = 1Ch) [reset = 0h]

ESMSR2 is shown in Figure 11-542 and described in Table 11-1754.

Return to Summary Table.

ESM Status Register 2

Figure 11-542. ESMSR2 Register

31	30	29	28	27	26	25	24	23	22	21	20	19	18	17	16	15	14	13	12	11	10	9	8	7	6	5	4	3	2	1	0
ESF																															
R/W-0h																															

Table 11-1754. ESMSR2 Register Field Descriptions

Bit	Field	Type	Reset	Description
31-0	ESF	R/W	0h	Error Status Flag. Provides status information on a pending error. Read in User and Privileged mode. Write in Privileged mode only. 0 Read: No error occurred; no interrupt is pending. Write: Leaves the bit unchanged. 1 Read: Error occurred; interrupt is pending. Write: Clears the bit. ESMSSR2 is not impacted by this action. Note: In normal operation the flag gets cleared when reading the appropriate vector in the ESMIOFFHR offset register. Reading ESMIOFFHR will not clear the ESMSR1 and the shadow register ESMSSR2.

Copyright © 2025 Texas Instruments Incorporated

11.8.6.9.9 ESMSR3 Register (Offset = 20h) [reset = 0h]

ESMSR3 is shown in Figure 11-543 and described in Table 11-1755.

Return to Summary Table.

ESM Status Register 3

Figure 11-543. ESMSR3 Register

31	30	29	28	27	26	25	24	23	22	21	20	19	18	17	16	15	14	13	12	11	10	9	8	7	6	5	4	3	2	1	0
ESF																															
R/W-0h																															

Table 11-1755. ESMSR3 Register Field Descriptions

Bit	Field	Type	Reset	Description
31-0	ESF	R/W	0h	Error Status Flag. Provides status information on a pending error. Read in User and Privileged mode. Write in Privileged mode only. 0 Read: No error occurred. Write: Leaves the bit unchanged. 1 Read: Error occurred. Write: Clears the bit.

Copyright © 2025 Texas Instruments Incorporated

11.8.6.9.10 ESMEPSR Register (Offset = 24h) [reset = 0h]

ESMEPSR is shown in Figure 11-544 and described in Table 11-1756.

Return to Summary Table.

ESM ERROR Pin Status Register

Figure 11-544. ESMEPSR Register

31	30	29	28	27	26	25	24
RESERVED							
R/W-0h							
23	22	21	20	19	18	17	16
RESERVED							
R/W-0h							
15	14	13	12	11	10	9	8
RESERVED							
R/W-0h							
7	6	5	4	3	2	1	0
RESERVED							EPSF
R/W-0h							R/W-0h

Table 11-1756. ESMEPSR Register Field Descriptions

Bit	Field	Type	Reset	Description
31-1	RESERVED	R/W	0h	Read returns 0. Writes have no effect.
0	EPSF	R/W	0h	ERROR Pin Status Flag. Provides status information for the ERROR Pin. Read/Write in User and Privileged mode. 0 Read: ERROR Pin is low (active) if any error has occurred. Write: Writes have no effect. 1 Read: ERROR Pin is high if no error has occurred. Write: Writes have no effect. Note: This flag will be set to 1 after PORRST. The value will be unchanged after nRST. The ERROR pin status remains un-changed during after nRST.

Copyright © 2025 Texas Instruments Incorporated

11.8.6.9.11 ESMIOFFHR Register (Offset = 28h) [reset = 0h]

ESMIOFFHR is shown in Figure 11-545 and described in Table 11-1757.

Return to Summary Table.

ESM Interrupt Offset High Register

Figure 11-545. ESMIOFFHR Register

31	30	29	28	27	26	25	24	23	22	21	20	19	18	17	16	15	14	13	12	11	10	9	8	7	6	5	4	3	2	1	0
RESERVED																									INTOFFH						
R/W-0h																									R/W-0h						

Table 11-1757. ESMIOFFHR Register Field Descriptions

Bit	Field	Type	Reset	Description
31-7	RESERVED	R/W	0h	Read returns 0. Writes have no effect.
6-0	INTOFFH	R/W	0h	Offset High Level Interrupt. This vector gives the channel number of the highest pending interrupt request for the high level interrupt line. Interrupts of error Group2 have higher priority than interrupts of error Group1. Inside a group, channel 0 has highest priority and channel 31 has lowest priority. User and privileged mode (read): Returns number of pending interrupt with the highest priority for the high level interrupt line. 0 No pending interrupt. 1h Interrupt pending for channel 0, error Group1. ... 20h Interrupt pending for channel 31, error Group1. 21h Interrupt pending for channel 0, error Group2. ... 40h Interrupt pending for channel 31, error Group2. 41h Interrupt pending for channel 32, error Group1. ... 60h Interrupt pending for channel 63, error Group1. Note: Reading the interrupt vector will clear the corresponding flag in the ESMSR2 register; will not clear ESMSR1 and ESMSSR2 and the offset register gets updated. User and privileged mode (write): Writes have no effect.

Copyright © 2025 Texas Instruments Incorporated

11.8.6.9.12 ESMIOFFLR Register (Offset = 2Ch) [reset = 0h]

ESMIOFFLR is shown in Figure 11-546 and described in Table 11-1758.

Return to Summary Table.

ESM Interrupt Offset Low Register

Figure 11-546. ESMIOFFLR Register

31	30	29	28	27	26	25	24	23	22	21	20	19	18	17	16	15	14	13	12	11	10	9	8	7	6	5	4	3	2	1	0
RESERVED																									INTOFFL						
R/W-0h																									R/W-0h						

Table 11-1758. ESMIOFFLR Register Field Descriptions

Bit	Field	Type	Reset	Description
31-7	RESERVED	R/W	0h	Read returns 0. Writes have no effect.
6-0	INTOFFL	R/W	0h	Offset Low Level Interrupt. This vector gives the channel number of the highest pending interrupt request for the low level interrupt line. Inside a group, channel 0 has highest priority and channel 31 has lowest priority. User and privileged mode (read): Returns number of pending interrupt with the highest priority for the low level interrupt line. 0 No pending interrupt. 1h Interrupt pending for channel 0, error Group1. ... 20h Interrupt pending for channel 31, error Group1. 21h Interrupt pending for channel 32, error Group1. ... 60h Interrupt pending for channel 63, error Group1. Note: Reading the interrupt vector will not clear the corresponding flag in the ESMSR1 register. Group2 interrupts are fixed to the high level interrupt line only. User and privileged mode (write): Writes have no effect.

Copyright © 2025 Texas Instruments Incorporated

11.8.6.9.13 ESMLTCR Register (Offset = 30h) [reset = 0h]

ESMLTCR is shown in Figure 11-547 and described in Table 11-1759.

Return to Summary Table.

ESM Low-Time Counter Register

Figure 11-547. ESMLTCR Register

31	30	29	28	27	26	25	24	23	22	21	20	19	18	17	16	15	14	13	12	11	10	9	8	7	6	5	4	3	2	1	0
RESERVED																LTCP															
R/W-0h																R/W-0h															

Table 11-1759. ESMLTCR Register Field Descriptions

Bit	Field	Type	Reset	Description
31-16	RESERVED	R/W	0h	Read returns 0. Writes have no effect.
15-0	LTCP	R/W	0h	ERROR Pin Low-Time Counter 16bit pre-loadable down-counter to control low-time of ERROR pin. The low-time counter is triggered by the peripheral clock (VCLK). Note: Low time counter is set to the default preload value of the ESMLTCPR in the following cases: 1. Reset (power on reset or warm reset) 2. An error occurs 3. User forces an error

Copyright © 2025 Texas Instruments Incorporated

11.8.6.9.14 ESMLTCPR Register (Offset = 34h) [reset = 0h]

ESMLTCPR is shown in Figure 11-548 and described in Table 11-1760.

Return to Summary Table.

ESM Low-Time Counter Preload Register

Figure 11-548. ESMLTCPR Register

31	30	29	28	27	26	25	24	23	22	21	20	19	18	17	16	15	14	13	12	11	10	9	8	7	6	5	4	3	2	1	0
RESERVED																LTCP															
R/W-0h																R/W-0h															

Table 11-1760. ESMLTCPR Register Field Descriptions

Bit	Field	Type	Reset	Description
31-16	RESERVED	R/W	0h	Read returns 0. Writes have no effect.
15-0	LTCP	R/W	0h	ERROR Pin Low-Time Counter Pre-load Value 16bit pre-load value for the ERROR pin low-time counter. Note: Only LTCP.15 and LTCP.14 are configurable (privileged mode write).

Copyright © 2025 Texas Instruments Incorporated

11.8.6.9.15 ESMEKR Register (Offset = 38h) [reset = 0h]

ESMEKR is shown in Figure 11-549 and described in Table 11-1761.

Return to Summary Table.

ESM Error Key Register

Figure 11-549. ESMEKR Register

31	30	29	28	27	26	25	24	23	22	21	20	19	18	17	16	15	14	13	12	11	10	9	8	7	6	5	4	3	2	1	0
RESERVED																												EKEY			
R/W-0h																												R/W-0h			

Table 11-1761. ESMEKR Register Field Descriptions

Bit	Field	Type	Reset	Description
31-4	RESERVED	R/W	0h	Read returns 0. Writes have no effect.
3-0	EKEY	R/W	0h	Error Key. The key to reset the ERROR pin or to force an error on the ERROR pin. User and privileged mode (read): Returns current value of the EKEY. Privileged mode (write): 0 Activates normal mode (recommended default mode). Ah Forces error on ERROR pin. 5h The ERROR pin set to high when the low time counter (LTC) has completed; then the EKEY bit will switch back to normal mode (EKEY = 0000) All other values Activates normal mode.

Copyright © 2025 Texas Instruments Incorporated

11.8.6.9.16 ESMSSR2 Register (Offset = 3Ch) [reset = 0h]

ESMSSR2 is shown in Figure 11-550 and described in Table 11-1762.

Return to Summary Table.

ESM Status Shadow Register 2

Figure 11-550. ESMSSR2 Register

31	30	29	28	27	26	25	24	23	22	21	20	19	18	17	16	15	14	13	12	11	10	9	8	7	6	5	4	3	2	1	0
ESF																															
R/W-0h																															

Table 11-1762. ESMSSR2 Register Field Descriptions

Bit	Field	Type	Reset	Description
31-0	ESF	R/W	0h	Error Status Flag. Shadow register for status information on pending error. Read in User and Privileged mode. Write in Privileged mode only. 0 Read: No error occurred. Write: Leaves the bit unchanged. 1 Read: Error occurred. Write: Clears the bit. ESMSR2 is not impacted by this action. Note: Errors are stored until they are cleared by the software or at power-on reset (PORRST).

Copyright © 2025 Texas Instruments Incorporated

11.8.6.9.17 ESMIEPSR4 Register (Offset = 40h) [reset = 0h]

ESMIEPSR4 is shown in Figure 11-551 and described in Table 11-1763.

Return to Summary Table.

ESM Enable ERROR Pin Action/Response Register 4

Figure 11-551. ESMIEPSR4 Register

31	30	29	28	27	26	25	24	23	22	21	20	19	18	17	16	15	14	13	12	11	10	9	8	7	6	5	4	3	2	1	0
IEPSET																															
R/W-0h																															

Table 11-1763. ESMIEPSR4 Register Field Descriptions

Bit	Field	Type	Reset	Description
31-0	IEPSET	R/W	0h	Enable ERROR Pin Action/Response on Group 1. Read in User and Privileged mode. Write in Privileged mode only. 0 Read: Failure on channel x has no influence on ERROR pin. Write: Leaves the bit and the corresponding clear bit in the ESMIEPCR4 register unchanged. 1 Read: Failure on channel x has influence on ERROR pin. Write: Enables failure influence on ERROR pin and sets the corresponding clear bit in the ESMIEPCR4 register.

Copyright © 2025 Texas Instruments Incorporated

11.8.6.9.18 ESMIEPCR4 Register (Offset = 44h) [reset = 0h]

ESMIEPCR4 is shown in Figure 11-552 and described in Table 11-1764.

Return to Summary Table.

ESM Disable ERROR Pin Action/Response Register 4

Figure 11-552. ESMIEPCR4 Register

31	30	29	28	27	26	25	24	23	22	21	20	19	18	17	16	15	14	13	12	11	10	9	8	7	6	5	4	3	2	1	0
IEPCLR																															
R/W-0h																															

Table 11-1764. ESMIEPCR4 Register Field Descriptions

Bit	Field	Type	Reset	Description
31-0	IEPCLR	R/W	0h	Disable ERROR Pin Action/Response on Group 1. Read in User and Privileged mode. Write in Privileged mode only. 0 Read: Failure on channel x has no influence on ERROR pin. Write: Leaves the bit and the corresponding set bit in the ESMIEPSR4 register unchanged. 1 Read: Failure on channel x has influence on ERROR pin. Write: Disables failure influence on ERROR pin and clears the corresponding set bit in the ESMIEPSR4 register.

Copyright © 2025 Texas Instruments Incorporated

11.8.6.9.19 ESMIESR4 Register (Offset = 48h) [reset = 0h]

ESMIESR4 is shown in Figure 11-553 and described in Table 11-1765.

Return to Summary Table.

ESM Interrupt Enable Set/Status Register 4

Figure 11-553. ESMIESR4 Register

31	30	29	28	27	26	25	24	23	22	21	20	19	18	17	16	15	14	13	12	11	10	9	8	7	6	5	4	3	2	1	0
INTENSET																															
R/W-0h																															

Table 11-1765. ESMIESR4 Register Field Descriptions

Bit	Field	Type	Reset	Description
31-0	INTENSET	R/W	0h	Set interrupt Enable Read in User and Privileged mode. Write in Privileged mode only. 0 Read: Interrupt is disabled. Write: Leaves the bit and the corresponding clear bit in the ESMIECR4 register unchanged. 1 Read: Interrupt is enabled. Write: Enables interrupt and sets the corresponding clear bit in the ESMIECR4 register.

Copyright © 2025 Texas Instruments Incorporated

11.8.6.9.20 ESMIECR4 Register (Offset = 4Ch) [reset = 0h]

ESMIECR4 is shown in Figure 11-554 and described in Table 11-1766.

Return to Summary Table.

ESM Interrupt Enable Clear/Status Register 4

Figure 11-554. ESMIECR4 Register

31	30	29	28	27	26	25	24	23	22	21	20	19	18	17	16	15	14	13	12	11	10	9	8	7	6	5	4	3	2	1	0
INTENCLR																															
R/W-0h																															

Table 11-1766. ESMIECR4 Register Field Descriptions

Bit	Field	Type	Reset	Description
31-0	INTENCLR	R/W	0h	Clear Interrupt Enable Read in User and Privileged mode. Write in Privileged mode only. 0 Read: Interrupt is disabled. Write: Leaves the bit and the corresponding set bit in the ESMIESR4 register unchanged. 1 Read: Interrupt is enabled. Write: Disables interrupt and clears the corresponding set bit in the ESMIESR4 register.

Copyright © 2025 Texas Instruments Incorporated

11.8.6.9.21 ESMILSR4 Register (Offset = 50h) [reset = 0h]

ESMILSR4 is shown in Figure 11-555 and described in Table 11-1767.

Return to Summary Table.

Interrupt Level Set/Status Register 4

Figure 11-555. ESMILSR4 Register

31	30	29	28	27	26	25	24	23	22	21	20	19	18	17	16	15	14	13	12	11	10	9	8	7	6	5	4	3	2	1	0
INTLVLSET																															
R/W-0h																															

Table 11-1767. ESMILSR4 Register Field Descriptions

Bit	Field	Type	Reset	Description
31-0	INTLVLSET	R/W	0h	Set Interrupt Priority Read in User and Privileged mode. Write in Privileged mode only. 0 Read: Interrupt of channel x is mapped to low level interrupt line. Write: Leaves the bit and the corresponding clear bit in the ESMILCR4 register unchanged. 1 Read: Interrupt of channel x is mapped to high level interrupt line. Write: Maps interrupt of channel x to high level interrupt line and sets the corresponding clear bit in the ESMILCR4 register.

Copyright © 2025 Texas Instruments Incorporated

11.8.6.9.22 ESMILCR4 Register (Offset = 54h) [reset = 0h]

ESMILCR4 is shown in Figure 11-556 and described in Table 11-1768.

Return to Summary Table.

Interrupt Level Clear/Status Register 4

Figure 11-556. ESMILCR4 Register

31	30	29	28	27	26	25	24	23	22	21	20	19	18	17	16	15	14	13	12	11	10	9	8	7	6	5	4	3	2	1	0
INTLVLCLR																															
R/W-0h																															

Table 11-1768. ESMILCR4 Register Field Descriptions

Bit	Field	Type	Reset	Description
31-0	INTLVLCLR	R/W	0h	Clear Interrupt Priority. Read in User and Privileged mode. Write in Privileged mode only. 0 Read: Interrupt of channel x is mapped to low level interrupt line. Write: Leaves the bit and the corresponding set bit in the ESMILSR4 register unchanged. 1 Read: Interrupt of channel x is mapped to high level interrupt line. Write: Maps interrupt of channel x to low level interrupt line and clears the corresponding set bit in the ESMILSR4 register.

Copyright © 2025 Texas Instruments Incorporated

11.8.6.9.23 ESMSR4 Register (Offset = 58h) [reset = 0h]

ESMSR4 is shown in Figure 11-557 and described in Table 11-1769.

Return to Summary Table.

ESM Status Register 4

Figure 11-557. ESMSR4 Register

31	30	29	28	27	26	25	24	23	22	21	20	19	18	17	16	15	14	13	12	11	10	9	8	7	6	5	4	3	2	1	0
ESF																															
R/W-0h																															

Table 11-1769. ESMSR4 Register Field Descriptions

Bit	Field	Type	Reset	Description
31-0	ESF	R/W	0h	Error Status Flag. Provides status information on a pending error. Read in User and Privileged mode. Write in Privileged mode only. 0 Read: No error occurred; no interrupt is pending. Write: Leaves the bit unchanged. 1 Read: Error occurred; interrupt is pending. Write: Clears the bit. Note: After nRST, if one of these flags are set and the corresponding interrupt are enabled, the interrupt service routine will be called.

Copyright © 2025 Texas Instruments Incorporated

11.8.6.9.24 ESMIEPSR7 Register (Offset = 80h) [reset = 0h]

ESMIEPSR7 is shown in Figure 11-558 and described in Table 11-1770.

Return to Summary Table.

ESM Enable ERROR Pin Action/Response Register 7

Figure 11-558. ESMIEPSR7 Register

31	30	29	28	27	26	25	24	23	22	21	20	19	18	17	16	15	14	13	12	11	10	9	8	7	6	5	4	3	2	1	0
IEPSET																															
R/W-0h																															

Table 11-1770. ESMIEPSR7 Register Field Descriptions

Bit	Field	Type	Reset	Description
31-0	IEPSET	R/W	0h	Enable ERROR Pin Action/Response on Group 1. Read in User and Privileged mode. Write in Privileged mode only. 0 Read: Failure on channel x has no influence on ERROR pin. Write: Leaves the bit and the corresponding clear bit in the ESMIEPCR7 register unchanged. 1 Read: Failure on channel x has influence on ERROR pin. Write: Enables failure influence on ERROR pin and sets the corresponding clear bit in the ESMIEPCR7 register.

Copyright © 2025 Texas Instruments Incorporated

11.8.6.9.25 ESMIEPCR7 Register (Offset = 84h) [reset = 0h]

ESMIEPCR7 is shown in Figure 11-559 and described in Table 11-1771.

Return to Summary Table.

ESM Disable ERROR Pin Action/Response Register 7

Figure 11-559. ESMIEPCR7 Register

31	30	29	28	27	26	25	24	23	22	21	20	19	18	17	16	15	14	13	12	11	10	9	8	7	6	5	4	3	2	1	0
IEPCLR																															
R/W-0h																															

Table 11-1771. ESMIEPCR7 Register Field Descriptions

Bit	Field	Type	Reset	Description
31-0	IEPCLR	R/W	0h	Disable ERROR Pin Action/Response on Group 1. Read in User and Privileged mode. Write in Privileged mode only. 0 Read: Failure on channel x has no influence on ERROR pin. Write: Leaves the bit and the corresponding set bit in the ESMIEPSR7 register unchanged. 1 Read: Failure on channel x has influence on ERROR pin. Write: Disables failure influence on ERROR pin and clears the corresponding set bit in the ESMIEPSR7 register.

Copyright © 2025 Texas Instruments Incorporated

11.8.6.9.26 ESMIESR7 Register (Offset = 88h) [reset = 0h]

ESMIESR7 is shown in Figure 11-560 and described in Table 11-1772.

Return to Summary Table.

ESM Interrupt Enable Set/Status Register 7

Figure 11-560. ESMIESR7 Register

31	30	29	28	27	26	25	24	23	22	21	20	19	18	17	16	15	14	13	12	11	10	9	8	7	6	5	4	3	2	1	0
INTENSET																															
R/W-0h																															

Table 11-1772. ESMIESR7 Register Field Descriptions

Bit	Field	Type	Reset	Description
31-0	INTENSET	R/W	0h	Set interrupt Enable Read in User and Privileged mode. Write in Privileged mode only. 0 Read: Interrupt is disabled. Write: Leaves the bit and the corresponding clear bit in the ESMIECR7 register unchanged. 1 Read: Interrupt is enabled. Write: Enables interrupt and sets the corresponding clear bit in the ESMIECR7 register.

Copyright © 2025 Texas Instruments Incorporated

11.8.6.9.27 ESMIECR7 Register (Offset = 8Ch) [reset = 0h]

ESMIECR7 is shown in Figure 11-561 and described in Table 11-1773.

Return to Summary Table.

ESM Interrupt Enable Clear/Status Register 7

Figure 11-561. ESMIECR7 Register

31	30	29	28	27	26	25	24	23	22	21	20	19	18	17	16	15	14	13	12	11	10	9	8	7	6	5	4	3	2	1	0
INTENCLR																															
R/W-0h																															

Table 11-1773. ESMIECR7 Register Field Descriptions

Bit	Field	Type	Reset	Description
31-0	INTENCLR	R/W	0h	Clear Interrupt Enable Read in User and Privileged mode. Write in Privileged mode only. 0 Read: Interrupt is disabled. Write: Leaves the bit and the corresponding set bit in the ESMIESR7 register unchanged. 1 Read: Interrupt is enabled. Write: Disables interrupt and clears the corresponding set bit in the ESMIESR7 register.

Copyright © 2025 Texas Instruments Incorporated

11.8.6.9.28 ESMILSR7 Register (Offset = 90h) [reset = 0h]

ESMILSR7 is shown in Figure 11-562 and described in Table 11-1774.

Return to Summary Table.

Interrupt Level Set/Status Register 7

Figure 11-562. ESMILSR7 Register

31	30	29	28	27	26	25	24	23	22	21	20	19	18	17	16	15	14	13	12	11	10	9	8	7	6	5	4	3	2	1	0
INTLVLSET																															
R/W-0h																															

Table 11-1774. ESMILSR7 Register Field Descriptions

Bit	Field	Type	Reset	Description
31-0	INTLVLSET	R/W	0h	Set Interrupt Priority Read in User and Privileged mode. Write in Privileged mode only. 0 Read: Interrupt of channel x is mapped to low level interrupt line. Write: Leaves the bit and the corresponding clear bit in the ESMILCR7 register unchanged. 1 Read: Interrupt of channel x is mapped to high level interrupt line. Write: Maps interrupt of channel x to high level interrupt line and sets the corresponding clear bit in the ESMILCR7 register.

Copyright © 2025 Texas Instruments Incorporated

11.8.6.9.29 ESMILCR7 Register (Offset = 94h) [reset = 0h]

ESMILCR7 is shown in Figure 11-563 and described in Table 11-1775.

Return to Summary Table.

Interrupt Level Clear/Status Register 7

Figure 11-563. ESMILCR7 Register

31	30	29	28	27	26	25	24	23	22	21	20	19	18	17	16	15	14	13	12	11	10	9	8	7	6	5	4	3	2	1	0
INTLVLCLR																															
R/W-0h																															

Table 11-1775. ESMILCR7 Register Field Descriptions

Bit	Field	Type	Reset	Description
31-0	INTLVLCLR	R/W	0h	Clear Interrupt Priority. Read in User and Privileged mode. Write in Privileged mode only. 0 Read: Interrupt of channel x is mapped to low level interrupt line. Write: Leaves the bit and the corresponding set bit in the ESMILSR7 register unchanged. 1 Read: Interrupt of channel x is mapped to high level interrupt line. Write: Maps interrupt of channel x to low level interrupt line and clears the corresponding set bit in the ESMILSR7 register.

Copyright © 2025 Texas Instruments Incorporated

11.8.6.9.30 ESMSR7 Register (Offset = 98h) [reset = 0h]

ESMSR7 is shown in Figure 11-564 and described in Table 11-1776.

Return to Summary Table.

ESM Status Register 7

Figure 11-564. ESMSR7 Register

31	30	29	28	27	26	25	24	23	22	21	20	19	18	17	16	15	14	13	12	11	10	9	8	7	6	5	4	3	2	1	0
ESF																															
R/W-0h																															

Table 11-1776. ESMSR7 Register Field Descriptions

Bit	Field	Type	Reset	Description
31-0	ESF	R/W	0h	Error Status Flag. Provides status information on a pending error. Read in User and Privileged mode. Write in Privileged mode only. 0 Read: No error occurred; no interrupt is pending. Write: Leaves the bit unchanged. 1 Read: Error occurred; interrupt is pending. Write: Clears the bit. Note: After nRST, if one of these flags are set and the corresponding interrupt are enabled, the interrupt service routine will be called.

11.8.7 Cyclic Redudancy Check (CRC)

This section describes the cyclic redundancy check (CRC) controller module. Presently two CRC modules have been instantiated in the TRP1x one for MSS and another for DSS.

11.8.7.1 Overview

The CRC controller is a module that is used to perform CRC (Cyclic Redundancy Check) to verify the integrity of memory system. A signature representing the contents of the memory is obtained when the contents of the memory are read into CRC controller. The responsibility of CRC controller is to calculate the signature for a set of data and then compare the calculated signature value against a pre-determined good signature value. CRC controller supports two channels to perform CRC calculation on multiple memories in parallel and can be used on any memory system.

11.8.7.2 Features

The CRC controller offers:

- Two channels to perform background signature verification on any memory sub-system.
- Data compression on 8, 16, 32, and 64-bit data size.
- Maximum-length PSA (Parallel Signature Analysis) register constructed based on 64-bit primitive polynomial.
- Each channel has a CRC Value Register that contains the pre-determined CRC value.
- Use timed base event trigger from timer to initiate DMA data transfer.
- Programmable 20-bit pattern counter per channel to count the number of data patterns for compression.
- Three modes of operation. Auto, Semi-CPU and Full-CPU.
- For each channel, CRC can be performed either by CRC Controller or by CPU.
- Automatically perform signature verification without CPU intervention in AUTO mode.
- Generate interrupt to CPU in Semi-CPU mode to allow CPU to perform signature verification itself.
- Generate CRC fail interrupt in AUTO mode if signature verification fails.
- Generate Timeout interrupt if CRC is not performed within the time limit.
- Generate DMA request per channel to initiate CRC value transfer.

11.8.7.3 Block Diagram

Figure 11-565 shows a block diagram of the CRC controller.

Copyright © 2025 Texas Instruments Incorporated

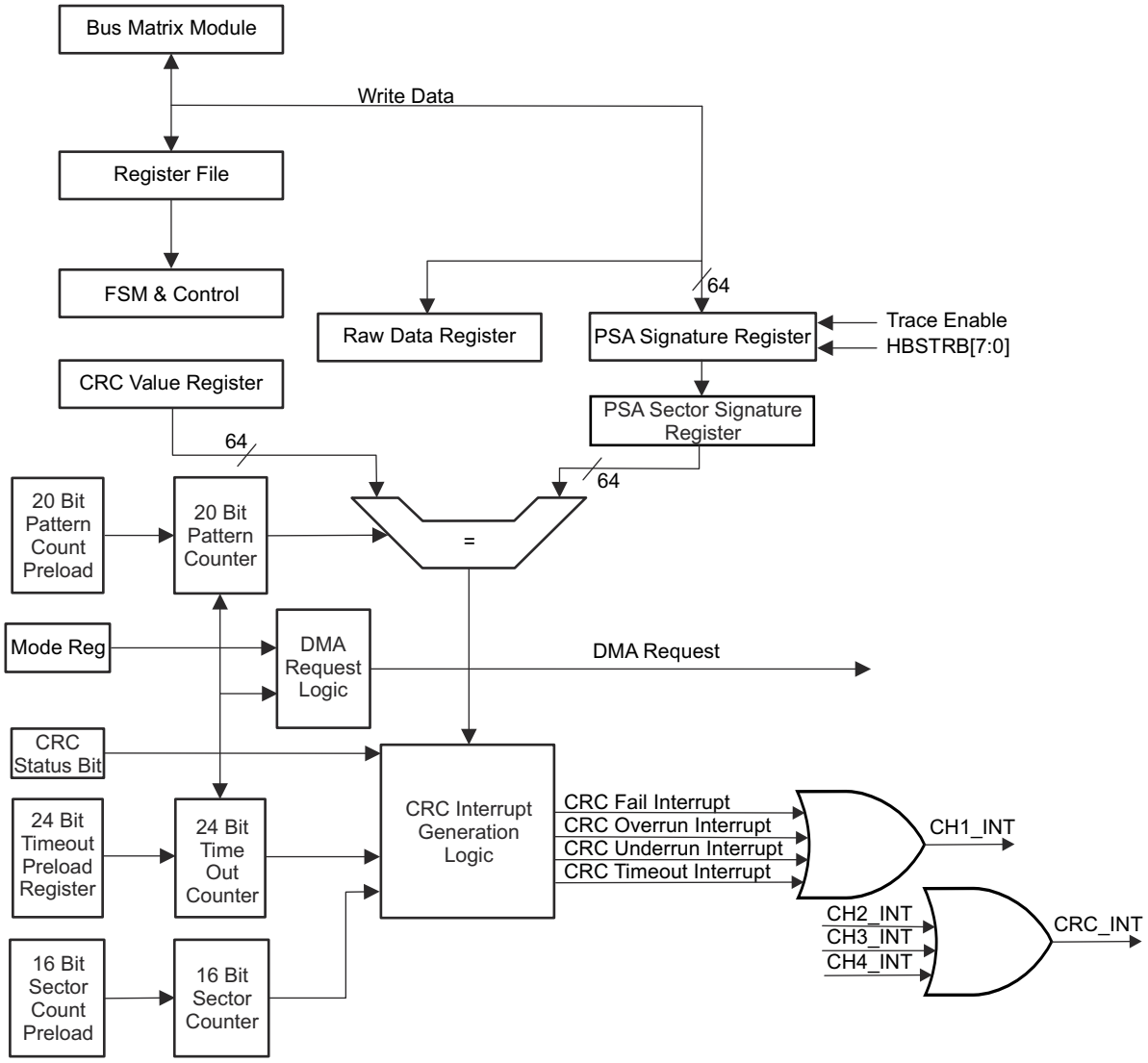

Figure 11-565. CRC Controller Block Diagram For One Channel

Copyright © 2025 Texas Instruments Incorporated

11.8.7.4 Module Operation

11.8.7.4.1 General Operation

There are two channels in CRC controller, and for each channel there is a memory-mapped PSA (Parallel Signature Analysis) Signature Register and a memory-mapped CRC (Cyclic Redundancy Check) Value Register. A memory can be organized into multiple sectors with each sector consisting of multiple data patterns. A data pattern can be 8-, 16-, 32-, or 64-bit data. CRC module performs the signature calculation and compares the signature to a pre-determined value. The PSA Signature Register compresses an incoming data pattern into a signature when it is written. When one sector of data patterns are written into PSA Signature Register, a final signature corresponding to the sector is obtained. CRC Value Register stores the pre-determined signature corresponding to one sector of data patterns. The calculated signature and the pre-determined signature are then compared to each other for signature verification. To minimize CPU's involvement, data patterns transfer can be carried out at the background of CPU using DMA controller. DMA is setup to transfer data from memory from which the contents to be verified to the memory mapped PSA Signature Register. When DMA transfers data to the memory mapped PSA Signature Register, a signature is generated. A programmable 20-bit data pattern counter is used for each channel to define the number of data patterns to calculate for each sector. Signature verification can be performed automatically by CRC controller in AUTO mode or by CPU itself in Semi-CPU or Full-CPU mode. In AUTO mode, a self sustained CRC signature calculation can be achieved without any CPU intervention.

11.8.7.4.2 CRC Modes of Operation

CRC Controller can operate in AUTO, Semi-CPU, and Full-CPU modes.

11.8.7.4.2.1 AUTO Mode

In AUTO mode, CRC Controller in conjunction with DMA controller can perform CRC without CPU intervention. A sustained transfer of data to both the PSA Signature Register and CRC Value Register are performed in the background of CPU. When a mismatch is detected, an interrupt is generated to CPU. A 16-bit current sector ID register is provided to identify which sector causes a CRC failure.

11.8.7.4.2.2 Semi-CPU Mode

In Semi-CPU mode, DMA controller is also utilized to perform data patterns transfer to PSA Signature Register. Instead of performing signature verification automatically, the CRC controller generates an compression complete interrupt to CPU after each sector is compressed. Upon responding to the interrupt the CPU performs the signature verification by reading the calculated signature stored at the PSA Sector Signature Register, and compares it to a pre-determined CRC value.

11.8.7.4.2.3 Full CPU Mode

In Full-CPU mode, the CPU does the data patterns transfer and signature verification all by itself. When CPU has enough throughput, it can perform data patterns transfer by reading data from the memory system to the PSA Signature Register. After certain number of data patterns are compressed, the CPU can read from the PSA Signature Register and compare the calculated signature to the pre-determined CRC signature value. In Full-CPU mode, neither interrupt nor DMA request is generated. All counters are also disabled.

Copyright © 2025 Texas Instruments Incorporated

11.8.7.4.3 PSA Signature Register

The 64-bit PSA Signature Register is based on the primitive polynomial (as in the following equation) to produce the maximum length LFSR (Linear Feedback Shift Register), as shown in Figure 11-566.

$$f(x) = x^{64} + x^4 + x^3 + x + 1 \quad (12)$$

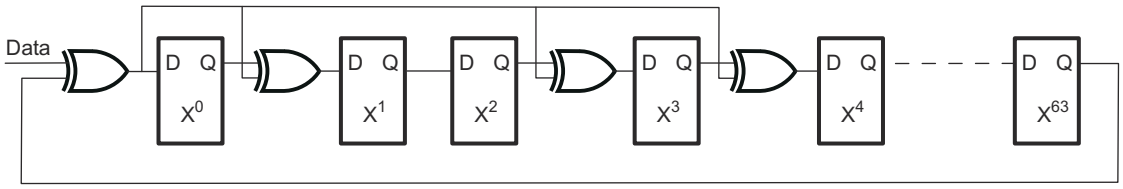

Figure 11-566. Linear Feedback Shift Register (LFSR)

The serial implementation of LFSF has a limitation that, it requires ‘n’ clock cycles to calculate the CRC values for an ‘n’ bit data stream. The idea is to produce the same CRC value operating on a multi-bit data stream, as would occur if the CRC were computed one bit at a time over the whole data stream. The algorithm involves looping to simulate the shifting, and concatenating strings to build the equations after ‘n’ shift.

The parallel CRC calculation based on the polynomial can be illustrated in the following HDL code:

```
for i in 63 to 0 loop
   NEXT_CRC_VAL(0) := CRC_VAL(63) xor DATA(i);
     for j in 1 to 63 loop
       case j is
          when 1|3|4 =>
               NEXT_CRC_VAL(j) :=
                   CRC_VAL(j - 1) xor CRC_VAL(63) xor DATA(i);
          when others =>
               NEXT_CRC_VAL(j) := CRC_VAL(j - 1);
       end case;
     end loop;
   CRC_VAL := NEXT_CRC_VAL;
end loop;
```

Note

1) The inner loop is to calculate the next value of each shift register bit after one cycle

2) The outer loop is to simulate 64 cycles of shifting. The equation for each shift register bit is thus built before it is compressed into the shift register.

3) MSB of the DATA is shifted in first

There is one PSA Signature Register per CRC channel. PSA Signature Register can be both read and written. When it is written, it can either compress the data or just capture the data depending on the state of CHx_MODE bits. If CHx_MODE=Data Capture, a seed value can be planted in the PSA Signature Register without compression. Other modes other than Data Capture will result with the data compressed by PSA Signature Register when it is written. Each channel can be planted with different seed value before compression starts. When PSA Signature Register is read, it gives the calculated signature.

CRC Controller should be used in conjunction with the on chip DMA controller to produce optimal system performance. The incoming data pattern to PSA Signature Register is typically initiated by the DMA controller. When DMA is properly setup, it would read data from the pre-determined memory system and write them to the memory mapped PSA Signature Register. Each time PSA Signature Register is written a signature is generated.

Copyright © 2025 Texas Instruments Incorporated

CPU itself can also perform data transfer by reading from the memory system and perform write operation to PSA Signature Register if CPU has enough throughput to handle data patterns transfer.

After system reset and when AUTO mode is enabled, CRC Controller automatically generates a DMA request to request the pre-determined CRC value corresponding to the first sector of memory to be checked.

In AUTO mode, when one sector of data patterns is compressed, the signature stored at the PSA Signature Register is first copied to the PSA Sector Signature Register and PSA Signature Register is then cleared out to all zeros. An automatic signature verification is then performed by comparing the signature stored at the PSA Sector Signature Register to the CRC Value Register. After the comparison the CRC Controller can generate a DMA request. Upon receiving the DMA request the DMA controller will update the CRC Value Register by transferring the next pre-determined signature value associated with the next sector of memory system. If the signature verification fails then CRC Controller can generate a CRC fail interrupt.

In Full-CPU mode, no DMA request and interrupt are generated at all. The number of data patterns to be compressed is determined by CPU itself. Full-CPU mode is useful when DMA controller is not available to perform background data patterns transfer. The OS can periodically generate a software interrupt to CPU and use CPU to accomplish data transfer and signature verification.

CRC Controller supports doubleword, word, half word and byte access to the PSA Signature Register. During a non-doubleword write access, all unwritten byte lanes are padded with zero’s before compression. Note that comparison between PSA Sector Signature Register and CRC Value Register is always in 64 bit because a compressed value is always expressed in 64 bit.

There is a software reset per channel for PSA Signature Register. When set, the PSA Signature Register is reset to all zeros.

PSA Signature Register is reset to zero under the following conditions:

- System reset
- PSA Software reset
- One sector of data patterns are compressed

11.8.7.4.4 PSA Sector Signature Register

After one sector of data is compressed, the final resulting signature calculated by PSA Signature Register is transferred to the PSA Sector Signature Register. PSA Signature Register is a read only register. During Semi-CPU mode, the host CPU should read from the PSA Sector Signature Register instead of reading from PSA Signature Register for signature verification to avoid data coherency issue. The PSA Signature Register can be updated with new signature before the host CPU is able to retrieve it.

In Semi-CPU mode, no DMA request is generated. When one sector of data patterns is compressed, CRC controller first generates a compression complete interrupt. Responding to the interrupt, CPU will in the ISR read the PSA Sector Signature Register and compare it to the known good signature or write the signature value to another memory location to build a signature file. In Semi-CPU mode, CPU must perform the signature verification in a manner to prevent any overrun condition. The overrun condition occurs when the compression complete interrupt is generated after one sector of data patterns is compressed and CPU has not read from the PSA Sector Signature Register to perform necessary signature verification before PSA Sector Signature Register is overridden with a new value. An overrun interrupt can be enable to generate when overrun condition occurs. During Semi-CPU mode, the host CPU should read from the PSA Sector Signature Register instead of reading from PSA Signature Register for signature verification to avoid data coherency issue. The PSA Signature Register can be updated with new signature before the host CPU is able to retrieve it.

Copyright © 2025 Texas Instruments Incorporated

11.8.7.4.5 CRC Value Register

Associated with each channel there is a CRC Value Register. The CRC Value Register stores the pre-determined CRC value. After one sector of data patterns is compressed by PSA Signature Register, CRC Controller can automatically compare the resulting signature stored at the PSA Sector Signature Register with the pre-determined value stored at the CRC Value Register if AUTO mode is enabled. If the signature verification fails, CRC Controller can be enabled to generate an CRC fail interrupt. When the channel is set up for Semi-CPU mode, CRC controller first generates a compression complete interrupt to CPU. Upon servicing the interrupt, CPU will then read the PSA Sector Signature Register and then read the corresponding CRC value stored at another location and compare them. CPU should not read from the CRC Value Register during Semi-CPU or Full-CPU mode because the CRC Value Register is not updated during these two modes.

In AUTO mode, for first sector's signature, DMA request is generated when mode is programmed to AUTO. For subsequent sectors, DMA request is generated after each sector is compressed. Responding to the DMA request, DMA controller reloads the CRC Value Register for the next sector of memory system to be checked.

When CRC Value Register is updated with a new CRC value, an internal flag is set to indicate that CRC Value Register contains the most current value. This flag is cleared when CRC comparison is performed. Each time at the end of the final data pattern compression of a sector, CRC Controller first checks to see if the corresponding CRC Value Register has the most current CRC value stored in it by polling the flag. If the flag is set then the CRC comparison can be performed. If the flag is not set then it means the CRC Value Register contains stale information. A CRC underrun interrupt is generated. When an underrun condition is detected, signature verification is not performed.

CRC Controller supports doubleword, word, half word and byte access to the CRC Value Register. As noted before comparison between PSA Sector Signature Register and CRC Value Register during AUTO mode is carried out in 64 bit.

11.8.7.4.6 Raw Data Register

The raw or un-compressed data written to the PSA Signature Register is also saved in the Raw Data Register. This register is read only.

11.8.7.4.7 Example DMA Controller Setup

DMA controller needs to be setup properly in either either AUTO or Semi-CPU mode as DMA controller is used to transfer data patterns. Hardware or a combination of hardware and software DMA triggering are supported.

11.8.7.4.7.1 AUTO Mode Using Hardware Timer Trigger

There are two DMA channels associated with each CRC channel when in AUTO mode. One DMA channel is setup to transfer data patterns from the source memory to the PSA Signature Register. The second DMA channel is setup to transfer the pre-determined signature to the CRC Value Register. The trigger source for the first DMA channel can be either by hardware or by software. As illustrated in Figure 11-567 a timer can be used to trigger a DMA request to initiate transfer from the source memory system to PSA Signature Register. In AUTO mode, CRC Controller also generates DMA request after one sector of data patterns is compressed to initiate transfer of the next CRC value corresponding to the next sector of memory. Thus a new CRC value is always updated in the CRC Value Register by DMA synchronized to each sector of memory.

A block of memory system is usually divided into many sectors. All sectors are the same size. The sector size is programmed in the CRC_PCOUNT_REGx and the number of sectors in one block is programmed in the CRC_SCOUNT_REGx of the respective channel. CRC_PCOUNT_REGx multiplies CRC_SCOUNT_REGx and multiplies transfer size of each data pattern should give the total block size in number of bytes.

The total size of the memory system to be examined is also programmed in the respective transfer count register inside DMA module. The DMA transfer count register is divided into two parts. They are element count and frame count. Note that an HW DMA request can be programmed to trigger either one frame or one entire block transfer. In Figure 11-567, an HW DMA request from a timer is used as a trigger source to initiate DMA transfer. If all two CRC channels are active in AUTO mode then a total of two DMA requests would be generated by CRC Controller.

Copyright © 2025 Texas Instruments Incorporated

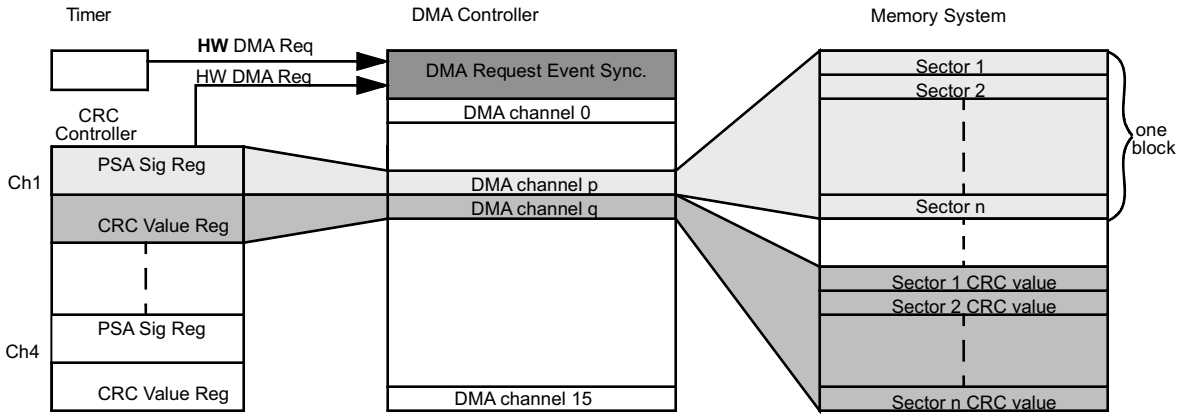

Figure 11-567. AUTO Mode Using Hardware Timer Trigger

11.8.7.4.7.2 AUTO Mode Using Software Trigger

The data patterns transfer can also be initiated by software. CPU can generate a software DMA request to activate the DMA channel to transfer data patterns from source memory system to the PSA Signature Register. To generate a software DMA request CPU needs to set the corresponding DMA channel in the DMA software trigger register. Note that just one software DMA request from CPU is enough to complete the entire data patterns transfer for all sectors. See Figure 11-568 for an illustration.

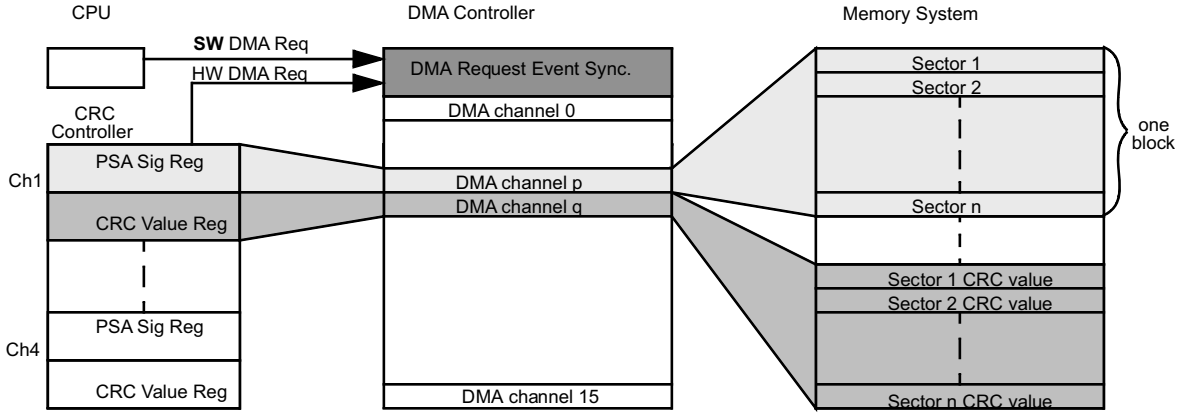

Figure 11-568. AUTO Mode With Software CPU Trigger

Copyright © 2025 Texas Instruments Incorporated

11.8.7.4.7.3 Semi-CPU Mode Using Hardware Timer Trigger

During semi-CPU mode, no DMA request is generated by CRC controller. Therefore, no DMA channel is allocated to update CRC Value Register. CPU should not read from CRC Value Register in semi-CPU mode as it contains stale value. Note that no signature verification is performed at all during this mode. Similar to AUTO mode, either by hardware or by software DMA request can be used as a trigger for data patterns transfer. Figure 11-569 illustrates the DMA setup using semi-CPU mode with hardware timer trigger.

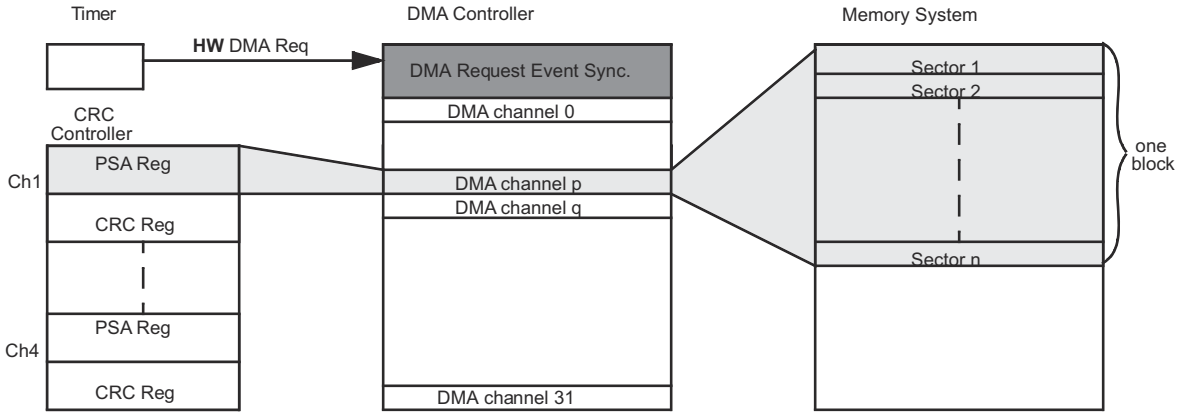

Figure 11-569. Semi-CPU Mode With Hardware Timer Trigger

Table 11-1777. CRC Modes in Which DMA Request and Counter Logic are Active or Inactive

Mode	DMA Request	Pattern Counter	Sector Counter	Timeout Counter
AUTO	Active	Active	Active	Active
Semi-CPU	Inactive	Active	Active	Active
Full-CPU	Inactive	Inactive	Inactive	Inactive

11.8.7.4.8 Pattern Count Register

There is a 20-bit data pattern counter for every CRC channel. The data pattern counter is a down counter and can be pre-loaded with a programmable value stored in the Pattern Count Register. When the data pattern counter reaches zero, a compression complete interrupt is generated in Semi-CPU mode and an automatic signature verification is performed in AUTO mode. In AUTO only, DMA request is generated to trigger the DMA controller to update the CRC Value Register.

Note

The data pattern count should be divisible by the total transfer count as programmed in DMA controller. The total transfer count is the product of element count and frame count.

11.8.7.4.9 Sector Count Register/Current Sector Register

Each channel contains a 16 bit sector counter. The sector count register stores the number of sectors. Sector counter is a free running counter and is incremented by one each time when one sector of data patterns is compressed. When the signature verification fails, the current value stored in the sector counter is saved into current sector register. If signature verification fails, CPU can read from the current sector register to identify the sector which causes the CRC mismatch. To aid and facilitate the CPU in determining the cause of a CRC failure, it is advisable to use the following equation during CRC and DMA setup:

CRC Pattern Count × CRC Sector Count = DMA Element Count × DMA Frame Count

Copyright © 2025 Texas Instruments Incorporated

The current sector register is frozen from being updated until both the current sector register is read and CRC fail status bit is cleared by CPU. If CPU does not respond to the CRC failure in a timely manner before another sector produces a signature verification failure, the current sector register is not updated with the new sector number. An overrun interrupt is generate instead. If current sector register is already frozen with an erroneous sector and emulation is entered with SUSPEND signal goes to high then the register still remains frozen even it is read.

In Semi-CPU mode, the current sector register is used to indicate the sector for which the compression complete has last happened.

The current sector register is reset when the PSA software reset is enabled.

Note

Both data pattern count and sector count registers must be greater than or equal to one for the counters to count. After reset, pattern count and sector count registers default to zero and the associated counters are inactive.

11.8.7.4.10 Interrupt

The CRC controller generates several types of interrupts per channel. Associated with each interrupt, there is an interrupt enable bit. No interrupt is generated in Full-CPU mode.

- Compression complete interrupt
- CRC fail interrupt
- Overrun interrupt
- Underrun interrupt
- Timeout interrupt

Table 11-1778. Modes in Which Interrupt Condition Can Occur

	AUTO	Semi-CPU	Full-CPU
Compression Complete	no	yes	no
CRC Fail	yes	no	no
Overrun	yes	yes	no
Underrun	yes	no	no
Timeout	yes	yes	no

11.8.7.4.10.1 Compression Complete Interrupt

Compression complete interrupt is generated in Semi-CPU mode only. When the data pattern counter reaches zero, the compression complete flag is set and the interrupt is generated.

11.8.7.4.10.2 CRC Fail Interrupt

CRC fail interrupt is generated in AUTO mode only. When the signature verification fails, the CRC fail flag is set,. CPU should take action to address the fail condition and clear the CRC fail flag after it resolves the CRC mismatch.

11.8.7.4.10.3 Overrun Interrupt

Overrun interrupt is generated in either AUTO or Semi-CPU mode. During AUTO mode, if a CRC fail is detected then the current sector number is recorded in the current sector register. If CRC fail status bit is not cleared and current sector register is not read by the host CPU before another CRC fail is detected for another sector then an overrun interrupt is generated. During Semi-CPU mode, when the data pattern counter finishes counting, it generates a compression complete interrupt. At the same time the signature is copied into the PSA Sector Signature Register. If the host CPU does not read the signature from PSA Sector Signature Register before it is updated again with a new signature value then an overrun interrupt is generated.

Copyright © 2025 Texas Instruments Incorporated

11.8.7.4.10.4 Underrun Interrupt

Underrun interrupt only occurs in AUTO mode. The interrupt is generated when the CRC Value Register is not updated with the corresponding signature when the data pattern counter finishes counting. During AUTO mode, CRC Controller generates DMA request to update CRC Value Register in synchronization to the corresponding sector of the memory. Signature verification is also performed if underrun condition is detected. And CRC fail interrupt is generated at the same time as the underrun interrupt.

11.8.7.4.10.5 Timeout Interrupt

To ensure that the memory system is examined within a pre-defined time frame and no loss of incoming data there is a 24 bit timeout counter per CRC channel. The 24 bit timeout down counter can be pre-loaded with two different pre-load values, watchdog timeout pre-load value (CRC_WDTOPLDx) and block complete timeout pre-load value (CRC_BCTOPLDx). The timeout counter is clocked by a prescaler clock which is permanently running at division 64 of HCLK clock.

First pattern of data must be transferred by the DMA before the timeout counter expires, Watchdog timeout pre-load register (CRC_WDTOPLDx) is used as timeout counter. Block complete timeout pre-load register (CRC_BCTOPLDx) is used to check if one complete block of data patterns are compressed within a specific time frame. The timeout counter is first pre-loaded with CRC_WDTOPLDx after either AUTO or Semi-CPU mode is selected and starts to down count. If the timeout counter expires before DMA transfers any data pattern to PSA Signature Register then a timeout interrupt is generated. An incoming data pattern before the timeout counter expires will automatically pre-load the timeout counter with CRC_BCTOPLDx the block complete timeout pre-load value.

Block complete timeout pre-load value is used to check it one block of data patterns are compressed within a given time limit. If the timeout counter pre-loaded with CRC_BCTOPLDx value expires before one block of data patterns are compressed a timeout interrupt is generated. When one block (pattern count x sector count) of data patterns are compressed before the counter has expired, the counter is pre-loaded with CRC_WDTOPLDx value again. If the timeout counter is pre-loaded with zero then the counter is disable and no timeout interrupt is generated.

In Figure 11-570, a timer generates DMA request every 10ms to trigger one block (pattern count x sector count) transfer. Since we want to make sure that DMA does start to transfer a block every 10 ms we would set the first pre-load value to 10ms in CRC_WDTOPLDx. We also want to make sure that one block of data patterns are compressed within 4ms. With such a requirement, we would set the second pre-load value to 4ms in CRC_BCTOPLDx register.

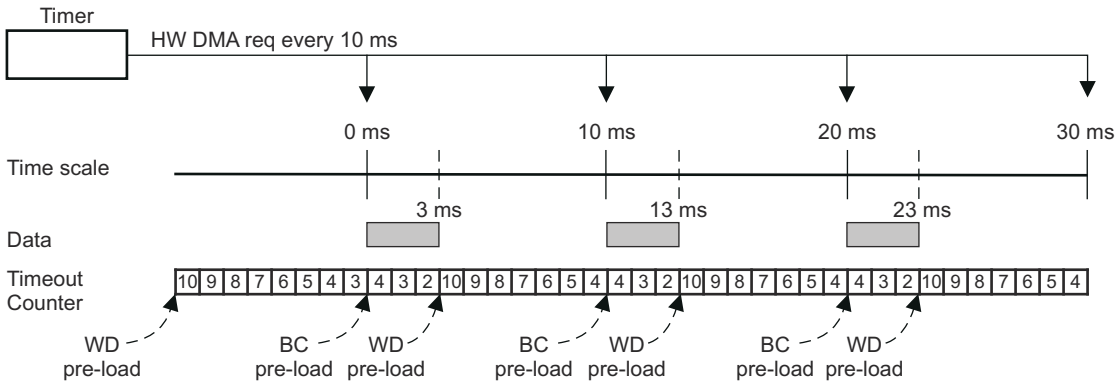

WD pre-load = watchdog timeout pre-load (CRC_WDTOPLDx)
BC pre-load = block complete timeout pre-load (CRC_BCTOPLDx)

Note: No timeout interrupt is generated in this example since each block of data patterns are compressed in 3 ms and DMA does initiate a block transfer every 10 ms.

Figure 11-570. Timeout Example 1

Copyright © 2025 Texas Instruments Incorporated

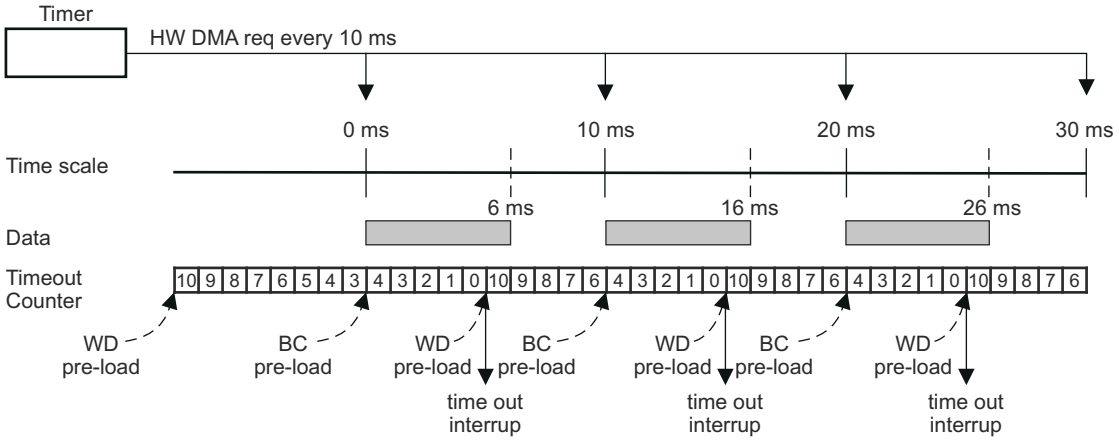

WD pre-load = watchdog timeout pre-load (CRC_WDTOPLDx)
BC pre-load = block complete timeout pre-load (CRC_BCTOPLDx)

Note: Timeout interrupt is generated in this example since each block of data patterns are compressed in 6 ms and this is out of the 4ms time frame.

Figure 11-571. Timeout Example 2

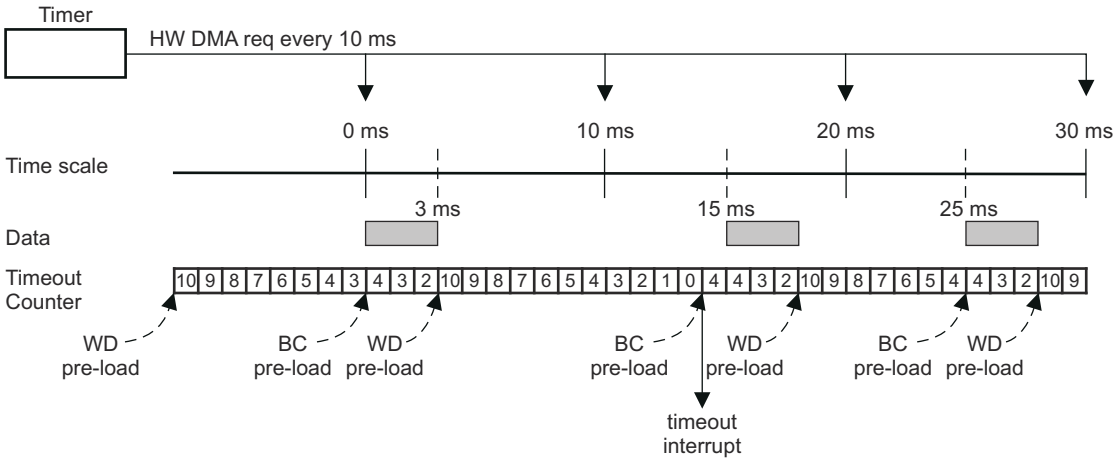

WD pre-load = watchdog timeout pre-load (CRC_WDTOPLDx)
BC pre-load = block complete timeout pre-load (CRC_BCTOPLDx)

Note: Timeout interrupt is generated in this example since DMA can not transfer the second block of data within 10ms time limit and the reason may be that DMA is set up in fixed priority scheme and DMA is serving other higher priority channels at the time before it can service the timer request.

Figure 11-572. Timeout Example 3

Copyright © 2025 Texas Instruments Incorporated

11.8.7.4.10.6 Interrupt Offset Register

CRC Controller only generates one interrupt request to interrupt manager. A interrupt offset register is provided to indicate the source of the pending interrupt with highest priority. Table 11-1779 shows the offset interrupt vector address of each interrupt condition in an ascending order of priority.

Table 11-1779. Interrupt Offset Mapping

Offset Value	Interrupt Condition
0	Phantom
1h	Ch1 CRC Fail
2h	Ch2 CRC Fail
3h-8h	Reserved
9h	Ch1 Compression Complete
Ah	Ch2 Compression Complete
Bh-10h	Reserved
11h	Ch1 Overrun
12h	Ch2 Overrun
13h-18h	Reserved
19h	Ch1 Underrun
1Ah	Ch2 Underrun
1Bh-20h	Reserved
21h	Ch1 Timeout
22h	Ch2 Timeout
23h-24h	Reserved

11.8.7.4.10.7 Error Handling

When an interrupt is generated, host CPU should take appropriate actions to identify the source of error and restart the respective channel in DMA and CRC module. To restart a CRC channel, the user should perform the following steps in the ISR:

1. Write to software reset bit in CRC_CTRL register to reset the respective PSA Signature Register.
2. Reset the CHx_MODE bits to 00 in CRC_CTRL register as Data capture mode.
3. Set the CHx_MODE bits in CRC_CTRL register to desired new mode again.
4. Release software reset.

The host CPU should use byte write to restart each individual channel.

11.8.7.4.11 Power Down Mode

CRC module can be put into power down mode when the power down control bit PWDN is set. The module wakes up when the PWDN bit is cleared.

11.8.7.4.12 Emulation

A read access from a register in functional mode can sometimes trigger a certain internal event to follow. For example, reading an interrupt offset register triggers an event to clear the corresponding interrupt status flag. During emulation when SUSPEND signal is high, a read access from any register should only return the register contents to the bus and should not trigger or mask any event as it would have in functional mode. This is to prevent debugger from reading the interrupt offset register during refreshing screen and cause the corresponding interrupt status flag to get cleared. Timeout counters are stopped to generate timeout interrupts in emulation mode. No Peripheral Controller bus error should be generated if reading from the unimplemented locations.

Copyright © 2025 Texas Instruments Incorporated

11.8.7.4.13 Peripheral Bus Interface

CRC is a Peripheral target module. The register interface is similar to other peripheral modules. CRC supports following features:

- Different sizes of burst operation.
- Aligned and unaligned accesses.
- Abort is generated for any illegal address accesses.

11.8.7.5 Example

This section illustrates several of the ways in which the CRC Controller can be utilized to perform CRC.

11.8.7.5.1 Example: Auto Mode Using Time Based Event Triggering

A large memory area with 2Mbyte (256k doubleword) is to be checked in the background of CPU. CRC is to be performed every 1K byte (128 doubleword). Therefore there should be 2048 pre-recorded CRC values. For illustration purpose, we map channel 1 CRC Value Register to DMA channel 1 and channel 1 PSA Signature Register to DMA channel 2. Assume all DMA transfers are carried out in 64-bit transfer size.

11.8.7.5.1.1 DMA Setup

- Set up DMA channel 1 with the starting address from which the pre-determined CRC values are stored. Set up the destination address to the memory mapped channel 1 CRC Value Register. Put the source address at post increment addressing mode and put the destination address at constant addressing mode. Use ***hardware*** DMA request for channel 1 to trigger a ***frame*** transfer.
- Set up DMA channel 2 with the source address from which the contents of memory to be verified. Set up the destination address to the memory mapped channel 1 PSA Signature Register. Program the element transfer count to 128 and the frame transfer count to 2048. Put the source address at post increment addressing mode and put the destination address at constant address mode. Use ***hardware*** DMA request for channel 2 to trigger an entire ***block*** transfer.

11.8.7.5.1.2 Timer Setup

The timer can be any general purpose timer which is capable of generating a time-based DMA request.

- Set up timer to generate DMA request associated with DMA channel 2. For example, an OS can set up the timer to generate a DMA request every 10ms.

Copyright © 2025 Texas Instruments Incorporated

11.8.7.5.1.3 CRC Setup

- Program the pattern count to 128.
- Program the sector count to 2048.
- Enable AUTO mode and all interrupts.

After AUTO mode is selected, CRC Controller automatically generates a DMA request on channel 1. Around the same time the timer module also generates a DMA request on DMA channel 2. When the first incoming data pattern arrives at the PSA Signature Register, the CRC Controller will compress it. After some time, the DMA controller would update the CRC Value Register with a pre-determined value matching the calculated signature for the first sector of 128 64 bit data patterns. After one sector of data patterns are compressed, the CRC Controller generate a CRC fail interrupt if signature stored at the PSA Sector Signature Register does not match the CRC Value Register. CRC Controller generates a DMA request on DMA channel 1 when one sector of data patterns are compressed. This routine will continue until the entire 2Mbyte are consumed. If the timeout counter reached zero before the entire 2Mbytes are compressed a timeout interrupt is generated. After 2MBytes are transferred, the DMA can generate an interrupt to CPU. The entire operation will continue again when DMA responds to the DMA request from both the timer and CRC Controller. The CRC is performed totally without any CPU intervention.

11.8.7.5.2 Example: Auto Mode Without Using Time Based Triggering

A small but highly secured memory area with 1kbytes is to be checked in the background of CPU. CRC is to be performed every 1Kbytes. Therefore there is only one pre-recorded CRC value. For illustration purpose, we map channel 1 CRC Value Register to DMA channel 1 and channel 1 PSA Signature Register to DMA channel 2. Assume all transfers carried out by DMA are in 64 bit transfer size.

11.8.7.5.2.1 DMA Setup

- Set up DMA channel 1 with the source address from which the pre-determined CRC value is stored. Set up the destination address to the memory mapped channel 1 CRC Value Register. Put the source address at constant addressing mode and put the destination address at constant addressing mode. Use ***hardware*** DMA request for channel 1.
- Set up DMA channel 2 with the source address from which the memory area to be verified. Set up the destination address to the memory mapped channel 1 PSA Signature Register. Program the element transfer count to 128 and the frame transfer count to 1. Put the source address at post increment addressing mode and put the destination address at constant address mode. Generate a ***software*** DMA request on channel 2 after CRC has completed its setup. Enable autoinitiation for DMA channel 2.

11.8.7.5.2.2 CRC Setup

- Program the pattern count to 128.
- Program the sector count to 1.
- Leaving the timeout count register with the reset value of zero means no timeout interrupt is generated.
- Enable AUTO mode and all interrupts.

After AUTO mode is selected, the CRC Controller automatically generates a DMA request on channel 1. At the same time the CPU generates a ***software*** DMA request on DMA channel 2. When the first incoming data pattern arrives at the PSA Signature Register, the CRC Controller will compress it. After some time, the DMA controller would update the CRC Value Register with a pre-determined value matching the calculated signature for the first sector of 128 64 bit data patterns. After one sector of data patterns are compressed, the CRC Controller generates a CRC fail interrupt if signature stored at the PSA Sector Signature Register does not match the CRC Value Register. CRC Controller generates a DMA request on DMA channel 1 again after one sector is compressed. After 1kbytes are transferred, the DMA can generate an interrupt to CPU. Responding to the DMA interrupt CPU can restart the CRC routine by generating a software DMA request onto channel 2 again.

11.8.7.5.3 Example: Semi-CPU Mode

If DMA controller is available in a system, the CRC module can also operate in semi-CPU mode. This means that CPU can still make use of the DMA to perform data patterns transfer to CRC controller in the background. The difference between semi-CPU mode and AUTO mode is that CRC controller does not automatically perform

Copyright © 2025 Texas Instruments Incorporated

the signature verification. CRC controllers generates a compression complete interrupt to CPU when the one sector of data patterns are compressed. CPU needs to perform the signature verification itself.

A memory area with 2Mbyte is to be verified with the help of the CPU. CRC operation is to be performed every 1K byte. Since there are 2Mbyte (256k doublewords) of memory to be check and we want to perform a CRC every 1Kbyte (128 doublewords) and therefore there should be 2048 pre-recorded CRC values. In Semi-CPU mode, the CRC Value Register is not updated and contains indeterminate data.

11.8.7.5.3.1 DMA Setup

Set up DMA channel 1 with the source address from which the memory area to be verified are mapped. Set up the destination address to the memory mapped channel 1 PSA Signature Register. Put the starting address at post increment addressing mode and put the destination address at constant address mode. Use hardware DMA request to trigger an entire block transfer for channel 1. Disable autoinitiation for DMA channel 1.

11.8.7.5.3.2 Timer Setup

The timer can be any general purpose timer which is capable of generating a time based DMA request.

Set up timer to generate DMA request associated with DMA channel 1. For example, an OS can set up the timer to generate a DMA request every 10ms.

11.8.7.5.3.3 CRC Setup

- Program the pattern count to 128.
- Program the sector count to 2048.
- Enable Semi-CPU mode and enable all interrupts.

The timer module first generates a DMA request on DMA channel 1 when it is enabled. When the first incoming data pattern arrives at the PSA Signature Register, the CRC controller will compress it. After one sector of data patterns are compressed, the CRC controller generate a compression complete interrupt. Upon responding to the interrupt the CPU would read from the PSA Sector Signature Register. It is up to the CPU on how to deal with the PSA value just read. It can compare it to a known signature value or it can write it to another memory location to build a signature file or even transfer the signature out of the device via SCI or SPI. This routine will continue until the entire 2Mbyte are consumed. The latency of the interrupt response from CPU can cause overrun condition. If CPU does not read from PSA Sector Signature Register before the PSA value is overridden with the signature of the next sector of memory, an overrun interrupt will be generated by CRC controller.

11.8.7.5.4 Example: Full-CPU Mode

In a system without the availability of DMA controller, the CRC routine can be operated by CPU provided the CPU has enough throughput. CPU needs to read from the memory area from which CRC is to be performed.

A memory area with 2Mbyte is to be checked with the help of the CPU. CRC verification is to be performed every 1K byte. In CPU mode, the CRC Value Register is not updated and contains indeterminate data.

11.8.7.5.4.1 CRC Setup

- All control registers can be left in their reset state. Only enable Full-CPU mode.

CPU itself reads from the memory and write the data to the PSA Signature Register inside CRC Controller. When the first incoming data pattern arrives at the PSA Signature Register, the CRC Controller will compress it. After ***2MBytes*** data patterns are compressed, CPU can read from the PSA Signature Register. It is up to the CPU on how to deal with the PSA signature value just read. It can compare it to a known signature value stored at another memory location.

Copyright © 2025 Texas Instruments Incorporated

11.8.7.6 MSS_MCRC Registers

Table 11-1780 lists the PCR_generated_memory_map registers. All register offset addresses not listed in Table 11-1780 should be considered as reserved locations and the register contents should not be modified.

Table 11-1780. MSS_MCRC Registers

Offset	Acronym	Register Name	Section
0h	CRC_CTRL0	CRC Global Control Register 0	Section 12.8.7.6.1
8h	CRC_CTRL1	CRC Global Control Register 1	Section 12.8.7.6.2
10h	CRC_CTRL2	CRC Global Control Register 2	Section 12.8.7.6.3
18h	CRC_INTS	CRC Interrupt Enable Set Register	Section 12.8.7.6.4
20h	CRC_INTR	CRC Interrupt Enable Reset Register	Section 12.8.7.6.5
28h	CRC_STATUS_REG	CRC Interrupt Status Register-	Section 12.8.7.6.6
30h	CRC_INT_OFFSET_REG	CRC Interrupt Offset	Section 12.8.7.6.7
38h	CRC_BUSY	CRC Busy Register during AUTO mode	Section 12.8.7.6.8
40h	CRC_PCOUNT_REG1	CRC Pattern Counter Pre-load Register1	Section 12.8.7.6.9
44h	CRC_SCOUNT_REG1	CRC Sector Counter Pre-load Register1	Section 12.8.7.6.10
48h	CRC_CURSEC_REG1	CRC Current Sector Regis-ter 1	Section 12.8.7.6.11
4Ch	CRC_WDTOPLD1	CRC channel 1 Watchdog Timeout Preload Register A	Section 12.8.7.6.12
50h	CRC_BCTOPLD1	CRC channel 1 Block Complete Timeout Preload Register B	Section 12.8.7.6.13
60h	PSA_SIGREGL1	Channel 1 PSA signature low register	Section 12.8.7.6.14
64h	PSA_SIGREGH1	Channel 1 PSA signature high register	Section 12.8.7.6.15
68h	CRC_REGL1	Channel 1 CRC value low register	Section 12.8.7.6.16
6Ch	CRC_REGH1	Channel 1 CRC value high register	Section 12.8.7.6.17
70h	PSA_SECSIGREGL1	Channel 1 PSA sector sig-nature low register	Section 12.8.7.6.18
74h	PSA_SECSIGREGH1	Channel 1 PSA sector sig-nature high register	Section 12.8.7.6.19
78h	RAW_DATAREGL1	Channel 1 Raw Data Low Register	Section 12.8.7.6.20
7Ch	RAW_DATAREGH1	Channel 1 Raw Data High Register	Section 12.8.7.6.21
80h	CRC_PCOUNT_REG2	CRC Pattern Counter Pre-load Register2	Section 12.8.7.6.22
84h	CRC_SCOUNT_REG2	CRC Sector Counter Pre-load Register2	Section 12.8.7.6.23
88h	CRC_CURSEC_REG2	CRC Current Sector Regis-ter 2	Section 12.8.7.6.24
8Ch	CRC_WDTOPLD2	CRC channel 2 Watchdog Timeout Preload Register	Section 12.8.7.6.25
90h	CRC_BCTOPLD2	CRC channel 2 Block Com-plete Timeout Preload Reg-ister	Section 12.8.7.6.26
A0h	PSA_SIGREGL2	Channel 2 PSA signature low register	Section 12.8.7.6.27
A4h	PSA_SIGREGH2	Channel 2 PSA signature high register	Section 12.8.7.6.28
A8h	CRC_REGL2	Channel 2 CRC value low register	Section 12.8.7.6.29
ACh	CRC_REGH2	Channel 2 CRC value high register	Section 12.8.7.6.30
B0h	PSA_SECSIGREGL2	Channel 2 PSA sector sig-nature low register	Section 12.8.7.6.31
B4h	PSA_SECSIGREGH2	Channel 2 PSA sector sig-nature high register	Section 12.8.7.6.32
B8h	RAW_DATAREGL2	Channel 2 Raw Data Low Register	Section 12.8.7.6.33
BCh	RAW_DATAREGH2	Channel 2 Raw Data High register	Section 12.8.7.6.34
C0h	CRC_PCOUNT_REG3	CRC Pattern Counter Pre-load Register3	Section 12.8.7.6.35
C4h	CRC_SCOUNT_REG3	CRC Sector Counter Pre-load Register3	Section 12.8.7.6.36
C8h	CRC_CURSEC_REG3	CRC Current Sector Regis-ter 3	Section 12.8.7.6.37
CCh	CRC_WDTOPLD3	CRC channel 3 Watchdog Timeout Preload Register	Section 12.8.7.6.38
D0h	CRC_BCTOPLD3	CRC channel 3 Block Com-plete Timeout Preload Reg-ister	Section 12.8.7.6.39

Copyright © 2025 Texas Instruments Incorporated

Table 11-1780. MSS_MCRC Registers (continued)

Offset	Acronym	Register Name	Section
E0h	PSA_SIGREGL3	Channel 3 PSA signature low register	Section 12.8.7.6.40
E4h	PSA_SIGREGH3	Channel 3 PSA signature high register	Section 12.8.7.6.41
E8h	CRC_REGL3	Channel 3 CRC value low register	Section 12.8.7.6.42
ECh	CRC_REGH3	Channel 3 CRC value high register	Section 12.8.7.6.43
F0h	PSA_SECSIGREGL3	Channel 3 PSA sector sig-nature low register	Section 12.8.7.6.44
F4h	PSA_SECSIGREGH3	Channel 3 PSA sector sig-nature high register	Section 12.8.7.6.45
F8h	RAW_DATAREGL3	Channel 3 Raw Data Low Register	Section 12.8.7.6.46
FCh	RAW_DATAREGH3	Channel 3 Raw Data High register	Section 12.8.7.6.47
100h	CRC_PCOUNT_REG4	CRC Pattern Counter Pre-load Register4	Section 12.8.7.6.48
104h	CRC_SCOUNT_REG4	CRC Sector Counter Pre-load Register4	Section 12.8.7.6.49
108h	CRC_CURSEC_REG4	CRC Current Sector Regis-ter 4	Section 12.8.7.6.50
10Ch	CRC_WDTOPLD4	CRC channel 4 Watchdog Timeout Preload Register	Section 12.8.7.6.51
110h	CRC_BCTOPLD4	CRC channel 4 Block Com-plete Timeout Preload Reg-ister	Section 12.8.7.6.52
120h	PSA_SIGREGL4	Channel 4 PSA signature low register	Section 12.8.7.6.53
124h	PSA_SIGREGH4	Channel 4 PSA signature high register	Section 12.8.7.6.54
128h	CRC_REGL4	Channel 4 CRC value low register	Section 12.8.7.6.55
12Ch	CRC_REGH4	Channel 4 CRC value high register	Section 12.8.7.6.56
130h	PSA_SECSIGREGL4	Channel 4 PSA sector sig-nature low register	Section 12.8.7.6.57
134h	PSA_SECSIGREGH4	Channel 4 PSA sector sig-nature high register	Section 12.8.7.6.58
138h	RAW_DATAREGL4	Channel 4 Raw Data Low Register	Section 12.8.7.6.59
13Ch	RAW_DATAREGH4	Channel 4 Raw Data High register	Section 12.8.7.6.60
140h	MCRC_BUS_SEL	Data bus tracing selection	Section 12.8.7.6.61
144h	MCRC_RESERVED	RESERVED	Section 12.8.7.6.62

Copyright © 2025 Texas Instruments Incorporated

11.8.7.6.1 CRC_CTRL0 Register (Offset = 0h) [reset = 0h]

CRC_CTRL0 is shown in Figure 11-573 and described in Table 11-1781.

Return to the Table 11-1780.

Contains sw reset control bit to reset PSA

Figure 11-573. CRC_CTRL0 Register

31	30	29	28	27	26	25	24
NU12	NU11	NU10	NU9		NU8		NU7
R-0h	R-0h	R-0h	R-0h		R-0h		R-0h
23	22	21	20	19	18	17	16
NU6	NU5	NU4	NU3		NU2		NU1
R-0h	R-0h	R-0h	R-0h		R-0h		R-0h
15	14	13	12	11	10	9	8
CH2_CRC_SEL2	CH2_BYTE_SWAP	CH2_BIT_SWAP	CH2_CRC_SEL		CH2_DW_SEL		CH2_PSA_SWREST
R/W-0h	R/W-0h	R/W-0h	R/W-0h		R/W-0h		R/W-0h
7	6	5	4	3	2	1	0
CH1_CRC_SEL2	CH1_BYTE_SWAP	CH1_BIT_SWAP	CH1_CRC_SEL		CH1_DW_SEL		CH1_PSA_SWREST
R/W-0h	R/W-0h	R/W-0h	R/W-0h		R/W-0h		R/W-0h

Table 11-1781. CRC_CTRL0 Register Field Descriptions

Bit	Field	Type	Reset	Description
31	NU12	R	0h	Reserved
30	NU11	R	0h	Reserved
29	NU10	R	0h	Reserved
28-27	NU9	R	0h	Reserved
26-25	NU8	R	0h	Reserved
24	NU7	R	0h	Reserved
23	NU6	R	0h	Reserved
22	NU5	R	0h	Reserved
21	NU4	R	0h	Reserved
20-19	NU3	R	0h	Reserved
18-17	NU2	R	0h	Reserved
16	NU1	R	0h	Reserved
15	CH2_CRC_SEL2	R/W	0h	Refer "CH2_DW_SEL" field description
14	CH2_BYTE_SWAP	R/W	0h	BYTE SWAP Enable across Data Size 0 – Byte Swap Disabled 1 – Byte Swap enabled.
13	CH2_BIT_SWAP	R/W	0h	msb/lsb SWAPPING 0 – msb (most significant bit First) 1 – lsb (least significant bit First)
12-11	CH2_CRC_SEL	R/W	0h	CRC type select. {CH1_CRC_SEL2,CH1_CRC_SEL[1:0]} 000 – CRC-64 001 - CRC-16 010 – CRC-32 100 - VDA CAN, CRC-8, Autosar 4.0 110 - CASTAGNOLI, iSCSI 111 / 011 - E2E Profile 4
10-9	CH2_DW_SEL	R/W	0h	CRC Data Size select. 000 – 64 bit Data Size 001 - 16 bit Data Size 010 – 32 Bit Data Size

Copyright © 2025 Texas Instruments Incorporated

Table 11-1781. CRC_CTRL0 Register Field Descriptions (continued)

Bit	Field	Type	Reset	Description
8	CH2_PSA_SWREST	R/W	0h	Channel 2 PSA Software Reset. When set, the PSA Signature Register is reset to all zero. Software reset does not reset software reset bit itself. Therefore, CPU is required to clear this bit by writing a ‘0’. 0 = PSA Signature Register not reset 1 = PSA Signature Register reset
7	CH1_CRC_SEL2	R/W	0h	Refer "CH1_DW_SEL" field description
6	CH1_BYTE_SWAP	R/W	0h	BYTE SWAP Enable across Data Size 0 – Byte Swap Disabled 1 – Byte Swap enabled.
5	CH1_BIT_SWAP	R/W	0h	msb/lsb SWAPPING 0 – msb (most significant bit First) 1 – lsb (least significant bit First)
4-3	CH1_CRC_SEL	R/W	0h	CRC type select. {CH1_CRC_SEL2,CH1_CRC_SEL[1:0]} 000 – CRC-64 001 - CRC-16 010 – CRC-32 100 - VDA CAN, SAE-J1850 CRC-8 101 - H2F, Autosar 4.0 110 - CASTAGNOLI, iSCSI 111 / 011 - E2E Profile 4
2-1	CH1_DW_SEL	R/W	0h	CRC Data Size select. 000 – 64 bit Data Size 001 - 16 bit Data Size 010 – 32 Bit Data Size
0	CH1_PSA_SWREST	R/W	0h	Channel 1 PSA Software Reset. When set, the PSA Signature Register is reset to all zero. Software reset does not reset software reset bit itself. Therefore, CPU is required to clear this bit by writing a ‘0’. 0 = PSA Signature Register not reset 1 = PSA Signature Register reset

Copyright © 2025 Texas Instruments Incorporated

11.8.7.6.2 CRC_CTRL1 Register (Offset = 8h) [reset = 0h]

CRC_CTRL1 is shown in Figure 11-574 and described in Table 11-1782.

Return to the Table 11-1780.

Contains power down control bit

Figure 11-574. CRC_CTRL1 Register

31	30	29	28	27	26	25	24
RESERVED							
R-0h							
23	22	21	20	19	18	17	16
RESERVED							
R-0h							
15	14	13	12	11	10	9	8
RESERVED							
R-0h							
7	6	5	4	3	2	1	0
RESERVED							PWDN
R-0h							R/W-0h

Table 11-1782. CRC_CTRL1 Register Field Descriptions

Bit	Field	Type	Reset	Description
31-1	RESERVED	R	0h	
0	PWDN	R/W	0h	Power Down. When set, MCRC moduleMCRC Module is put in power down mode. 0 = MCRC is not in power down mode 1 = MCRC is in power down mode

Copyright © 2025 Texas Instruments Incorporated

11.8.7.6.3 CRC_CTRL2 Register (Offset = 10h) [reset = 0h]

CRC_CTRL2 is shown in Figure 11-575 and described in Table 11-1783.

Return to the Table 11-1780.

Contains channel mode, data trace enable control bits

Figure 11-575. CRC_CTRL2 Register

31	30	29	28	27	26	25	24
RESERVED						NU14	
R-0h						R-0h	
23	22	21	20	19	18	17	16
RESERVED						NU13	
R-0h						R-0h	
15	14	13	12	11	10	9	8
RESERVED						CH2_MODE	
R-0h						R/W-0h	
7	6	5	4	3	2	1	0
RESERVED			CH1_TRACEEN	RESERVED		CH1_MODE	
R-0h			R/W-0h	R-0h		R/W-0h	

Table 11-1783. CRC_CTRL2 Register Field Descriptions

Bit	Field	Type	Reset	Description
31-26	RESERVED	R	0h	
25-24	NU14	R	0h	Reserved
23-18	RESERVED	R	0h	
17-16	NU13	R	0h	Reserved
15-10	RESERVED	R	0h	
9-8	CH2_MODE	R/W	0h	Channel 2 Mode: 0 0 = Data Capture mode. In this mode, the PSA Signature Register does not compress data when it is written. Any data written to PSA Signature Register is simply captured by PSA Signature Register without any compression. This mode can be used to plant seed value into the PSA register 0 1 = AUTO mode 1 0 = Semi-CPU mode 1 1 = Full-CPU mode
7-5	RESERVED	R	0h	
4	CH1_TRACEEN	R/W	0h	Channel 1 Data Trace Enable. When set, the channel is put into data trace mode. The channel snoops on the CPU VBUSM, ITCM, DTCM buses for any read transaction. Any read data on these buses is compressed by the PSA Signature Register. When suspend is on, the PSA Signature Register does not compress any read data on these buses. 0 = Data Trace disable 1 = Data Trace enable
3-2	RESERVED	R	0h	
1-0	CH1_MODE	R/W	0h	Channel 1 Mode: 0 0 = Data Capture mode. In this mode, the PSA Signature Register does not compress data when it is written. Any data written to PSA Signature Register is simply captured by PSA Signature Register without any compression. This mode can be used to plant seed value into the PSA register 0 1 = AUTO mode 1 0 = Semi-CPU mode 1 1 = Full-CPU mode

Copyright © 2025 Texas Instruments Incorporated

11.8.7.6.4 CRC_INTS Register (Offset = 18h) [reset = 0h]

CRC_INTS is shown in Figure 11-576 and described in Table 11-1784.

Return to the Table 11-1780.

Write one to a bit to enable a interrupt

Figure 11-576. CRC_INTS Register

31	30	29	28	27	26	25	24
RESERVED			NU22	NU21	NU20	NU19	RESERVED
R-0h			R-0h	R-0h	R-0h	R-0h	R-0h
23	22	21	20	19	18	17	16
RESERVED			NU18	NU17	NU16	NU15	RESERVED
R-0h			R-0h	R-0h	R-0h	R-0h	R-0h
15	14	13	12	11	10	9	8
RESERVED			CH2_TIMEOUTENS	CH2_UNDERENS	CH2_OVERENS	CH2_CRCFAILENS	CH2_CCITENS
R-0h			R/W-0h	R/W-0h	R/W-0h	R/W-0h	R-0h
7	6	5	4	3	2	1	0
RESERVED			CH1_TIMEOUTENS	CH1_UNDERENS	CH1_OVERENS	CH1_CRCFAILENS	CH1_CCITENS
R-0h			R/W-0h	R/W-0h	R/W-0h	R/W-0h	R-0h

Table 11-1784. CRC_INTS Register Field Descriptions

Bit	Field	Type	Reset	Description
31-29	RESERVED	R	0h	
28	NU22	R	0h	Reserved
27	NU21	R	0h	Reserved
26	NU20	R	0h	Reserved
25	NU19	R	0h	Reserved
24-21	RESERVED	R	0h	
20	NU18	R	0h	Reserved
19	NU17	R	0h	Reserved
18	NU16	R	0h	Reserved
17	NU15	R	0h	Reserved
16-13	RESERVED	R	0h	
12	CH2_TIMEOUTENS	R/W	0h	Channel 2 Timeout Interrupt Enable Bit. Writing a one to this bit enable the timeout interrupt. Writing a zero has no effect. Reading from this bit gives the status (interrupt enable/disable). User and privileged mode read: 0 = Timeout Interrupt disable 1 = Timeout Interrupt enable User and privileged mode write: 0 = Has no effect 1 = Timeout Interrupt enable
11	CH2_UNDERENS	R/W	0h	Channel 2 Underrun Interrupt Enable Bit. Writing a one to this bit enable the underrun interrupt. Writing a zero has no effect. Reading from this bit gives the status (interrupt enable/disable). User and privileged mode read: 0 = Underrun Interrupt disable 1 = Underrun Interrupt enable User and privileged mode write: 0 = Has no effect 1 = Underrun Interrupt enable

Copyright © 2025 Texas Instruments Incorporated

Table 11-1784. CRC_INTS Register Field Descriptions (continued)

Bit	Field	Type	Reset	Description
10	CH2_OVERENS	R/W	0h	Channel 2 Overrun Interrupt Enable Bit. Writing a one to this bit enable the overrun interrupt. Writing a zero has no effect. Reading from this bit gives the status (interrupt enable/disable). User and privileged mode read: 0 = Overrun Interrupt disable 1 = Overrun Interrupt enable User and privileged mode write: 0 = Has no effect 1 = Overrun Interrupt enable
9	CH2_CRCFAILENS	R/W	0h	Channel 2 CRC Fail Interrupt Enable Bit. Writing a one to this bit enable the CRC fail interrupt. Writing a zero has no effect. Reading from this bit gives the status (interrupt enable/disable). User and privileged mode read: 0 = CRC Fail Interrupt disable 1 = CRC Fail Interrupt enable User and privileged mode write: 0 = Has no effect 1 = CRC Fail Interrupt enable
8	CH2_CRC_FAILENS	R/W	0h	Channel 2 CRC Fail Interrupt Enable Bit. Writing a one to this bit enable the CRC fail interrupt. Writing a zero has no effect. Reading from this bit gives the status (interrupt enable/disable). User and privileged mode read: 0 = CRC Fail Interrupt disable 1 = CRC Fail Interrupt enable User and privileged mode write: 0 = Has no effect 1 = CRC Fail Interrupt enable
7-5	RESERVED	R	0h	
4	CH1_TIMEOUTENS	R/W	0h	Channel 1 Timeout Interrupt Enable Bit. Writing a one to this bit enable the timeout interrupt. Writing a zero has no effect. Reading from this bit gives the status (interrupt enable/disable). User and privileged mode read: 0 = Timeout Interrupt disable 1 = Timeout Interrupt enable User and privileged mode write: 0 = Has no effect 1 = Timeout Interrupt enable
3	CH1_UNDERENS	R/W	0h	Channel 1 Underrun Interrupt Enable Bit. Writing a one to this bit enable the underrun interrupt. Writing a zero has no effect. Reading from this bit gives the status (interrupt enable/disable). User and privileged mode read: 0 = Underrun Interrupt disable 1 = Underrun Interrupt enable User and privileged mode write: 0 = Has no effect 1 = Underrun Interrupt enable
2	CH1_OVERENS	R/W	0h	Channel 1 Overrun Interrupt Enable Bit. Writing a one to this bit enable the overrun interrupt. Writing a zero has no effect. Reading from this bit gives the status (interrupt enable/disable). User and privileged mode read: 0 = Overrun Interrupt disable 1 = Overrun Interrupt enable User and privileged mode write: 0 = Has no effect 1 = Overrun Interrupt enable
1	CH1_CRCFAILENS	R/W	0h	Channel 1 CRC Fail Interrupt Enable Bit. Writing a one to this bit enable the CRC fail interrupt. Writing a zero has no effect. Reading from this bit gives the status (interrupt enable/disable). User and privileged mode read: 0 = CRC Fail Interrupt disable 1 = CRC Fail Interrupt enable User and privileged mode write: 0 = Has no effect 1 = CRC Fail Interrupt enable

Copyright © 2025 Texas Instruments Incorporated

Table 11-1784. CRC_INTS Register Field Descriptions (continued)

Bit	Field	Type	Reset	Description
0	CH1_CCITENS	R/W	0h	Channel 1 Compression Complete Interrupt Enable Bit. Writing a one to this bit enable the CRC fail interrupt. Writing a zero has no effect. Reading from this bit gives the status (interrupt enable/ disable). User and privileged mode read: 0 = Compression Complete Interrupt disable 1 = Compression Complete Interrupt enable User and privileged mode write: 0 = Has no effect 1 = Compression Complete Interrupt enable

Copyright © 2025 Texas Instruments Incorporated

11.8.7.6.5 CRC_INTR Register (Offset = 20h) [reset = 0h]

CRC_INTR is shown in Figure 11-577 and described in Table 11-1785.

Return to the Table 11-1780.

Write one to a bit to disable a interrupt

Figure 11-577. CRC_INTR Register

31	30	29	28	27	26	25	24
RESERVED			NU30	NU29	NU28	NU27	RESERVED
R-0h			R-0h	R-0h	R-0h	R-0h	R-0h
23	22	21	20	19	18	17	16
RESERVED			NU26	NU25	NU24	NU23	RESERVED
R-0h			R-0h	R-0h	R-0h	R-0h	R-0h
15	14	13	12	11	10	9	8
RESERVED			CH2_TIMEOUTENR	CH2_UNDERENR	CH2_OVERENR	CH2_CRCFAILENR	CH2_CCITENS
R-0h			R/W-0h	R/W-0h	R/W-0h	R/W-0h	R-0h
7	6	5	4	3	2	1	0
RESERVED			CH1_TIMEOUTENR	CH1_UNDERENR	CH1_OVERENR	CH1_CRCFAILENR	CH1_CCITENS
R-0h			R/W-0h	R/W-0h	R/W-0h	R/W-0h	R-0h

Table 11-1785. CRC_INTR Register Field Descriptions

Bit	Field	Type	Reset	Description
31-29	RESERVED	R	0h	
28	NU30	R	0h	Reserved
27	NU29	R	0h	Reserved
26	NU28	R	0h	Reserved
25	NU27	R	0h	Reserved
24-21	RESERVED	R	0h	
20	NU26	R	0h	Reserved
19	NU25	R	0h	Reserved
18	NU24	R	0h	Reserved
17	NU23	R	0h	Reserved
16-13	RESERVED	R	0h	
12	CH2_TIMEOUTENR	R/W	0h	Channel 2 Timeout Interrupt Disable Bit. Writing a one to this bit disable the timeout interrupt. Writing a zero has no effect. Reading from this bit gives the status (interrupt enable/disable). User and privileged mode read: 0 = Timeout Interrupt disable 1 = Timeout Interrupt enable User and privileged mode write: 0 = Has no effect 1 = Timeout Interrupt disable
11	CH2_UNDERENR	R/W	0h	Channel 2 Underrun Interrupt Disable Bit. Writing a one to this bit disable the underrun interrupt. Writing a zero has no effect. Reading from this bit gives the status (interrupt enable/dis- able). User and privileged mode read: 0 = Underrun Interrupt disable 1 = Underrun Interrupt enable User and privileged mode write: 0 = Has no effect 1 = Underrun Interrupt disable

Copyright © 2025 Texas Instruments Incorporated

Table 11-1785. CRC_INTR Register Field Descriptions (continued)

Bit	Field	Type	Reset	Description
10	CH2_OVERENR	R/W	0h	Channel 2 Overrun Interrupt Disable Bit. Writing a one to this bit disable the overrun interrupt. Writing a zero has no effect. Reading from this bit gives the status (interrupt enable/disable). User and privileged mode read: 0 = Overrun Interrupt disable 1 = Overrun Interrupt enable User and privileged mode write: 0 = Has no effect 1 = Overrun Interrupt disable
9	CH2_CRCFAILENR	R/W	0h	Channel 2 CRC Fail Interrupt Disable Bit. Writing a one to this bit disable the CRC fail interrupt. Writing a zero has no effect. Reading from this bit gives the status (interrupt enable/disable). User and privileged mode read: 0 = CRC Fail Interrupt disable 1 = CRC Fail Interrupt enable User and privileged mode write: 0 = Has no effect 1 = CRC Fail Interrupt disable
8	CH2_CCITENS	R/W	0h	Channel 2 Compression Complete Interrupt Enable Bit. Writing a one to this bit enable the CRC fail interrupt. Writing a zero has no effect. Reading from this bit gives the status (interrupt enable/ disable). User and privileged mode read: 0 = Compression Complete Interrupt disable 1 = Compression Complete Interrupt enable User and privileged mode write: 0 = Has no effect 1 = Compression Complete Interrupt enable
7-5	RESERVED	R	0h	
4	CH1_TIMEOUTENR	R/W	0h	Channel 1 Timeout Interrupt Disable Bit. Writing a one to this bit disable the timeout interrupt. Writing a zero has no effect. Reading from this bit gives the status (interrupt enable/disable). User and privileged mode read: 0 = Timeout Interrupt disable 1 = Timeout Interrupt enable User and privileged mode write: 0 = Has no effect 1 = Timeout Interrupt disable
3	CH1_UNDERENR	R/W	0h	Channel 1 Underrun Interrupt Disable Bit. Writing a one to this bit disable the underrun interrupt. Writing a zero has no effect. Reading from this bit gives the status (interrupt enable/dis- able). User and privileged mode read: 0 = Underrun Interrupt disable 1 = Underrun Interrupt enable User and privileged mode write: 0 = Has no effect 1 = Underrun Interrupt disable
2	CH1_OVERENR	R/W	0h	Channel 1 Overrun Interrupt Disable Bit. Writing a one to this bit disable the overrun interrupt. Writing a zero has no effect. Reading from this bit gives the status (interrupt enable/disable). User and privileged mode read: 0 = Overrun Interrupt disable 1 = Overrun Interrupt enable User and privileged mode write: 0 = Has no effect 1 = Overrun Interrupt disable
1	CH1_CRCFAILENR	R/W	0h	Channel 1 CRC Fail Interrupt Disable Bit. Writing a one to this bit disable the CRC fail interrupt. Writing a zero has no effect. Reading from this bit gives the status (interrupt enable/disable). User and privileged mode read: 0 = CRC Fail Interrupt disable 1 = CRC Fail Interrupt enable User and privileged mode write: 0 = Has no effect 1 = CRC Fail Interrupt disable

Copyright © 2025 Texas Instruments Incorporated

Table 11-1785. CRC_INTR Register Field Descriptions (continued)

Bit	Field	Type	Reset	Description
0	CH1_CCITENS	R	0h	Channel 1 Compression Complete Interrupt Enable Bit. Writing a one to this bit enable the CRC fail interrupt. Writing a zero has no effect. Reading from this bit gives the status (interrupt enable/ disable). User and privileged mode read: 0 = Compression Complete Interrupt disable 1 = Compression Complete Interrupt enable User and privileged mode write: 0 = Has no effect 1 = Compression Complete Interrupt enable

Copyright © 2025 Texas Instruments Incorporated

11.8.7.6.6 CRC_STATUS_REG Register (Offset = 28h) [reset = 0h]

CRC_STATUS_REG is shown in Figure 11-578 and described in Table 11-1786.

Return to the Table 11-1780.

Contains interrupt flags for different types of interrupt

Figure 11-578. CRC_STATUS_REG Register

31	30	29	28	27	26	25	24
RESERVED			NU38	NU37	NU36	NU35	RESERVED
R-0h			R-0h	R-0h	R-0h	R-0h	R-0h
23	22	21	20	19	18	17	16
RESERVED			NU34	NU33	NU32	NU31	RESERVED
R-0h			R-0h	R-0h	R-0h	R-0h	R-0h
15	14	13	12	11	10	9	8
RESERVED			CH2_TIMEOUT	CH2_UNDER	CH2_OVER	CH2_CRCFAIL	CH2_CCIT
R-0h			R/W-0h	R/W-0h	R/W-0h	R/W-0h	R-0h
7	6	5	4	3	2	1	0
RESERVED			CH1_TIMEOUT	CH1_UNDER	CH1_OVER	CH1_CRCFAIL	CH1_CCIT
R-0h			R/W-0h	R/W-0h	R/W-0h	R/W-0h	R-0h

Table 11-1786. CRC_STATUS_REG Register Field Descriptions

Bit	Field	Type	Reset	Description
31-29	RESERVED	R	0h	
28	NU38	R	0h	Reserved
27	NU37	R	0h	Reserved
26	NU36	R	0h	Reserved
25	NU35	R	0h	Reserved
24-21	RESERVED	R	0h	
20	NU34	R	0h	Reserved
19	NU33	R	0h	Reserved
18	NU32	R	0h	Reserved
17	NU31	R	0h	Reserved
16-13	RESERVED	R	0h	
12	CH2_TIMEOUT	R/W	0h	Channel 2 CRC Timeout Status Flag. This bit is cleared by writing a ’1’ to it only. Writing ’0’ has no effect. This bit is set in AUTO mode. 0 = No timeout interrupt is active 1 = Timeout interrupt is active
11	CH2_UNDER	R/W	0h	Channel 2 CRC Underrun Status Flag. This bit is cleared by writing a ’1’ to it only. Writing ’0’ has no effect. This bit is set in AUTO mode only 0 = No underrun interrupt is active 1 = Underrun interrupt is active
10	CH2_OVER	R/W	0h	Channel 2 CRC Overrun Status Flag. This bit is cleared by writing a ’1’ to it only. Writing ’0’ has no effect. This bit is set in AUTO mode 0 = No overrun interrupt is active 1 = Overrun interrupt is active

Copyright © 2025 Texas Instruments Incorporated

Table 11-1786. CRC_STATUS_REG Register Field Descriptions (continued)

Bit	Field	Type	Reset	Description
9	CH2_CRCFAIL	R/W	0h	Channel 2 CRC Compare Fail Status Flag. This bit is cleared by writing a '1' to it only. Writing '0' has no effect. This bit is set in AUTO mode only. 0 = No CRC compare fail interrupt is active 1 = CRC compare fail interrupt is active
8	CH2_CCIT	R/W	0h	Channel 2 CRC Pattern Compression Complete Status Flag. This bit is cleared by writing a 1 to it only. Writing 0 has no effect. This bit is only set in Semi-CPU mode. 0 = No CRC pattern compression complete interrupt is active 1 = CRC pattern compression complete interrupt is active
7-5	RESERVED	R	0h	
4	CH1_TIMEOUT	R/W	0h	Channel 1 CRC Timeout Status Flag. This bit is cleared by writing a '1' to it only. Writing '0' has no effect. This bit is set in AUTO mode. 0 = No timeout interrupt is active 1 = Timeout interrupt is active
3	CH1_UNDER	R/W	0h	Channel 1 CRC Underrun Status Flag. This bit is cleared by writing a '1' to it only. Writing '0' has no effect. This bit is set in AUTO mode only 0 = No underrun interrupt is active 1 = Underrun interrupt is active
2	CH1_OVER	R/W	0h	Channel 1 CRC Overrun Status Flag. This bit is cleared by writing a '1' to it only. Writing '0' has no effect. This bit is set in AUTO mode 0 = No overrun interrupt is active 1 = Overrun interrupt is active
1	CH1_CRCFAIL	R/W	0h	Channel 1 CRC Compare Fail Status Flag. This bit is cleared by writing a '1' to it only. Writing '0' has no effect. This bit is set in AUTO mode only. 0 = No CRC compare fail interrupt is active 1 = CRC compare fail interrupt is active
0	CH1_CCIT	R	0h	Channel 1 CRC Pattern Compression Complete Status Flag. This bit is cleared by writing a 1 to it only. Writing 0 has no effect. This bit is only set in Semi-CPU mode. 0 = No CRC pattern compression complete interrupt is active 1 = CRC pattern compression complete interrupt is active

Copyright © 2025 Texas Instruments Incorporated

11.8.7.6.7 CRC_INT_OFFSET_REG Register (Offset = 30h) [reset = 0h]

CRC_INT_OFFSET_REG is shown in Figure 11-579 and described in Table 11-1787.

Return to the Table 11-1780.

Contains the interrupt offset vector address

Figure 11-579. CRC_INT_OFFSET_REG Register

31	30	29	28	27	26	25	24	23	22	21	20	19	18	17	16	15	14	13	12	11	10	9	8	7	6	5	4	3	2	1	0
RESERVED																								OFSTREG							
R-0h																								R/W-0h							

Table 11-1787. CRC_INT_OFFSET_REG Register Field Descriptions

Bit	Field	Type	Reset	Description
31-8	RESERVED	R	0h	
7-0	OFSTREG	R/W	0h	CRC Interrupt Offset. This register indicates the highest priority pending interrupt vector address. Reading the offset register automatically clear the respective interrupt flag. Please reference Table 1–3. for details.

Copyright © 2025 Texas Instruments Incorporated

11.8.7.6.8 CRC_BUSY Register (Offset = 38h) [reset = 0h]

CRC_BUSY is shown in Figure 11-580 and described in Table 11-1788.

Return to the Table 11-1780.

Contains the busy flag for each channel

Figure 11-580. CRC_BUSY Register

31	30	29	28	27	26	25	24
RESERVED							NU40
R-0h							R-0h
23	22	21	20	19	18	17	16
RESERVED							NU39
R-0h							R-0h
15	14	13	12	11	10	9	8
RESERVED							Ch2_BUSY
R-0h							R-0h
7	6	5	4	3	2	1	0
RESERVED							CH1_BUSY
R-0h							R-0h

Table 11-1788. CRC_BUSY Register Field Descriptions

Bit	Field	Type	Reset	Description
31-25	RESERVED	R	0h	
24	NU40	R	0h	Reserved
23-17	RESERVED	R	0h	
16	NU39	R	0h	Reserved
15-9	RESERVED	R	0h	
8	Ch2_BUSY	R	0h	Ch2_BUSY. During AUTO mode, the busy flag is set when the first data pattern of the block is compressed and remains set until the the last data pattern of the block is compressed. The flag is cleared when the last data pattern of the block is compressed.
7-1	RESERVED	R	0h	
0	CH1_BUSY	R	0h	CH1_BUSY. During AUTO mode, the busy flag is set when the first data pattern of the block is compressed and remains set until the the last data pattern of the block is compressed. The flag is cleared when the last data pattern of the block is compressed.

Copyright © 2025 Texas Instruments Incorporated

11.8.7.6.9 CRC_PCOUNT_REG1 Register (Offset = 40h) [reset = 0h]

CRC_PCOUNT_REG1 is shown in Figure 11-581 and described in Table 11-1789.

Return to the Table 11-1780.

Channel 1 preload register for the pattern count

Figure 11-581. CRC_PCOUNT_REG1 Register

31	30	29	28	27	26	25	24	23	22	21	20	19	18	17	16	15	14	13	12	11	10	9	8	7	6	5	4	3	2	1	0
RESERVED												CRC_PAT_COUNT1																				
R-0h												R/W-0h																			

Table 11-1789. CRC_PCOUNT_REG1 Register Field Descriptions

Bit	Field	Type	Reset	Description
31-20	RESERVED	R	0h	
19-0	CRC_PAT_COUNT1	R/W	0h	Channel 1 Pattern Counter Preload Register. This register con- tains the number of data patterns in one sector to be compressed before a CRC is performed.

Copyright © 2025 Texas Instruments Incorporated

11.8.7.6.10 CRC_SCOUNT_REG1 Register (Offset = 44h) [reset = 0h]

CRC_SCOUNT_REG1 is shown in Figure 11-582 and described in Table 11-1790.

Return to the Table 11-1780.

Channel 1 preload register for the sector count

Figure 11-582. CRC_SCOUNT_REG1 Register

31	30	29	28	27	26	25	24	23	22	21	20	19	18	17	16	15	14	13	12	11	10	9	8	7	6	5	4	3	2	1	0
RESERVED																CRC_SEC_COUNT1															
R-0h																R/W-0h															

Table 11-1790. CRC_SCOUNT_REG1 Register Field Descriptions

Bit	Field	Type	Reset	Description
31-16	RESERVED	R	0h	
15-0	CRC_SEC_COUNT1	R/W	0h	Channel 1 Sector Counter Preload Register. This register con- tains the number of sectors in one block of memory.

Copyright © 2025 Texas Instruments Incorporated

11.8.7.6.11 CRC_CURSEC_REG1 Register (Offset = 48h) [reset = 0h]

CRC_CURSEC_REG1 is shown in Figure 11-583 and described in Table 11-1791.

Return to the Table 11-1780.

Channel 1 current sector register contains the sector number which causes CRC failure

Figure 11-583. CRC_CURSEC_REG1 Register

31	30	29	28	27	26	25	24	23	22	21	20	19	18	17	16	15	14	13	12	11	10	9	8	7	6	5	4	3	2	1	0
RESERVED																CRC_CURSEC1															
R-0h																R/W-0h															

Table 11-1791. CRC_CURSEC_REG1 Register Field Descriptions

Bit	Field	Type	Reset	Description
31-16	RESERVED	R	0h	
15-0	CRC_CURSEC1	R/W	0h	Channel 1 Current Sector ID Register. In AUTO mode, this register contains the current sector number of which the signature verification fails. The sector counter is a free running up counter. When a sector fails, the erroneous sector number is logged into current sector ID register and the CRC fail interrupt is generated The sector ID register is frozen until it is read and the CRC fail status bit is cleared by CPU. While it is frozen, it does not capture another erroneous sector number. When this condition happens, an overrun interrupt is generated instead. Once the register is read and the CRC fail interrupt flag is cleared it can capture new erro- neous sector number.

Copyright © 2025 Texas Instruments Incorporated

11.8.7.6.12 CRC_WDTOPLD1 Register (Offset = 4Ch) [reset = 0h]

CRC_WDTOPLD1 is shown in Figure 11-584 and described in Table 11-1792.

Return to the Table 11-1780.

Channel 1 timeout pre-load value to check if within a given time DMA initiates a block transfer

Figure 11-584. CRC_WDTOPLD1 Register

31	30	29	28	27	26	25	24	23	22	21	20	19	18	17	16	15	14	13	12	11	10	9	8	7	6	5	4	3	2	1	0
RESERVED								CRC_WDTOPLD1																							
R-0h								R/W-0h																							

Table 11-1792. CRC_WDTOPLD1 Register Field Descriptions

Bit	Field	Type	Reset	Description
31-24	RESERVED	R	0h	
23-0	CRC_WDTOPLD1	R/W	0h	Channel 1 Watchdog Timeout Counter Preload Register. This register contains the number of clock cycles within which the DMA must transfer the next block of data patterns.

Copyright © 2025 Texas Instruments Incorporated

11.8.7.6.13 CRC_BCTOPLD1 Register (Offset = 50h) [reset = 0h]

CRC_BCTOPLD1 is shown in Figure 11-585 and described in Table 11-1793.

Return to the Table 11-1780.

Channel 1 timeout pre-load value to check if one block of patterns are compressed with a given time

Figure 11-585. CRC_BCTOPLD1 Register

31	30	29	28	27	26	25	24	23	22	21	20	19	18	17	16	15	14	13	12	11	10	9	8	7	6	5	4	3	2	1	0
RESERVED								CRC_BCTOPLD1																							
R-0h								R/W-0h																							

Table 11-1793. CRC_BCTOPLD1 Register Field Descriptions

Bit	Field	Type	Reset	Description
31-24	RESERVED	R	0h	
23-0	CRC_BCTOPLD1	R/W	0h	Channel 1 Block Complete Timeout Counter Preload Regis- ter. This register contains the number of clock cycles within which the CRC for an entire block needs to complete before a timeout interrupt is generated.

Copyright © 2025 Texas Instruments Incorporated

11.8.7.6.14 PSA_SIGREGL1 Register (Offset = 60h) [reset = 0h]

PSA_SIGREGL1 is shown in Figure 11-586 and described in Table 11-1794.

Return to the Table 11-1780.

Channel 1 PSA signature low register

Figure 11-586. PSA_SIGREGL1 Register

31	30	29	28	27	26	25	24	23	22	21	20	19	18	17	16	15	14	13	12	11	10	9	8	7	6	5	4	3	2	1	0
PSASIG1_31_0																															
R/W-0h																															

Table 11-1794. PSA_SIGREGL1 Register Field Descriptions

Bit	Field	Type	Reset	Description
31-0	PSASIG1_31_0	R/W	0h	Channel 1 PSA Signature Low Register. This register contains the value stored at PSASIG1[31:0] register.

Copyright © 2025 Texas Instruments Incorporated

11.8.7.6.15 PSA_SIGREGH1 Register (Offset = 64h) [reset = 0h]

PSA_SIGREGH1 is shown in Figure 11-587 and described in Table 11-1795.

Return to the Table 11-1780.

Channel 1 PSA signature high register

Figure 11-587. PSA_SIGREGH1 Register

31	30	29	28	27	26	25	24	23	22	21	20	19	18	17	16	15	14	13	12	11	10	9	8	7	6	5	4	3	2	1	0
PSA_SIG1_63_32																															
R/W-0h																															

Table 11-1795. PSA_SIGREGH1 Register Field Descriptions

Bit	Field	Type	Reset	Description
31-0	PSA_SIG1_63_32	R/W	0h	Channel 1 PSA Signature High Register. This register contains the value stored at PSASIG1[63:32] register.

Copyright © 2025 Texas Instruments Incorporated

11.8.7.6.16 CRC_REGL1 Register (Offset = 68h) [reset = 0h]

CRC_REGL1 is shown in Figure 11-588 and described in Table 11-1796.

Return to the Table 11-1780.

Channel 1 CRC value low register

Figure 11-588. CRC_REGL1 Register

31	30	29	28	27	26	25	24	23	22	21	20	19	18	17	16	15	14	13	12	11	10	9	8	7	6	5	4	3	2	1	0
CRC1_31_0																															
R/W-0h																															

Table 11-1796. CRC_REGL1 Register Field Descriptions

Bit	Field	Type	Reset	Description
31-0	CRC1_31_0	R/W	0h	Channel 1 CRC Value Low Register. This register contains the current known good signature value stored at CRC1[31:0] regis- ter.

Copyright © 2025 Texas Instruments Incorporated

11.8.7.6.17 CRC_REGH1 Register (Offset = 6Ch) [reset = 0h]

CRC_REGH1 is shown in Figure 11-589 and described in Table 11-1797.

Return to the Table 11-1780.

Channel 1 CRC value high register

Figure 11-589. CRC_REGH1 Register

31	30	29	28	27	26	25	24	23	22	21	20	19	18	17	16	15	14	13	12	11	10	9	8	7	6	5	4	3	2	1	0
CRC1_63_32																															
R/W-0h																															

Table 11-1797. CRC_REGH1 Register Field Descriptions

Bit	Field	Type	Reset	Description
31-0	CRC1_63_32	R/W	0h	Channel 1 CRC Value High Register. This register contains the current known good signature value stored at CRC1[63:32] register.

Copyright © 2025 Texas Instruments Incorporated

11.8.7.6.18 PSA_SECSIGREGL1 Register (Offset = 70h) [reset = 0h]

PSA_SECSIGREGL1 is shown in Figure 11-590 and described in Table 11-1798.

Return to the Table 11-1780.

Channel 1 PSA sector signature low regis-ter

Figure 11-590. PSA_SECSIGREGL1 Register

31	30	29	28	27	26	25	24	23	22	21	20	19	18	17	16	15	14	13	12	11	10	9	8	7	6	5	4	3	2	1	0
PSASECSIG1_31_0																															
R-0h																															

Table 11-1798. PSA_SECSIGREGL1 Register Field Descriptions

Bit	Field	Type	Reset	Description
31-0	PSASECSIG1_31_0	R	0h	Channel 1 PSA Sector Signature Low Register. This register contains the value stored at PSASECSIG1[31:0] register.

Copyright © 2025 Texas Instruments Incorporated

11.8.7.6.19 PSA_SECSIGREGH1 Register (Offset = 74h) [reset = 0h]

PSA_SECSIGREGH1 is shown in Figure 11-591 and described in Table 11-1799.

Return to the Table 11-1780.

Channel 1 PSA sector signature high regis-ter

Figure 11-591. PSA_SECSIGREGH1 Register

31	30	29	28	27	26	25	24	23	22	21	20	19	18	17	16	15	14	13	12	11	10	9	8	7	6	5	4	3	2	1	0
PSASECSIG1_63_32																															
R-0h																															

Table 11-1799. PSA_SECSIGREGH1 Register Field Descriptions

Bit	Field	Type	Reset	Description
31-0	PSASECSIG1_63_32	R	0h	Channel 1 PSA Sector Signature High Register. This register contains the value stored at PSASECSIG1[63:32] register.

Copyright © 2025 Texas Instruments Incorporated

11.8.7.6.20 RAW_DATAREGL1 Register (Offset = 78h) [reset = 0h]

RAW_DATAREGL1 is shown in Figure 11-592 and described in Table 11-1800.

Return to the Table 11-1780.

Channel 1 un-compressed raw data low register

Figure 11-592. RAW_DATAREGL1 Register

31	30	29	28	27	26	25	24	23	22	21	20	19	18	17	16	15	14	13	12	11	10	9	8	7	6	5	4	3	2	1	0
RAW_DATA1_31_0																															
R-0h																															

Table 11-1800. RAW_DATAREGL1 Register Field Descriptions

Bit	Field	Type	Reset	Description
31-0	RAW_DATA1_31_0	R	0h	Channel 1 Raw Data Low Register. This register contains bit 31:0 of the un-compressed raw data.

Copyright © 2025 Texas Instruments Incorporated

11.8.7.6.21 RAW_DATAREGH1 Register (Offset = 7Ch) [reset = 0h]

RAW_DATAREGH1 is shown in Figure 11-593 and described in Table 11-1801.

Return to the Table 11-1780.

Channel 1 un-compressed raw data high register

Figure 11-593. RAW_DATAREGH1 Register

31	30	29	28	27	26	25	24	23	22	21	20	19	18	17	16	15	14	13	12	11	10	9	8	7	6	5	4	3	2	1	0
RAW_DATA1_63_32																															
R-0h																															

Table 11-1801. RAW_DATAREGH1 Register Field Descriptions

Bit	Field	Type	Reset	Description
31-0	RAW_DATA1_63_32	R	0h	Channel 1 Raw Data High Register. This register contains bit 63:32 of the un-compressed raw data.

Copyright © 2025 Texas Instruments Incorporated

11.8.7.6.22 CRC_PCOUNT_REG2 Register (Offset = 80h) [reset = 0h]

CRC_PCOUNT_REG2 is shown in Figure 11-594 and described in Table 11-1802.

Return to the Table 11-1780.

Channel 2 preload register for the pattern count

Figure 11-594. CRC_PCOUNT_REG2 Register

31	30	29	28	27	26	25	24	23	22	21	20	19	18	17	16	15	14	13	12	11	10	9	8	7	6	5	4	3	2	1	0
RESERVED												CRC_PAT_COUNT2																				
R-0h												R/W-0h																			

Table 11-1802. CRC_PCOUNT_REG2 Register Field Descriptions

Bit	Field	Type	Reset	Description
31-20	RESERVED	R	0h	
19-0	CRC_PAT_COUNT2	R/W	0h	Channel 2 Pattern Counter Preload Register. This register con- tains the number of data patterns in one sector to be compressed before a CRC is performed.

Copyright © 2025 Texas Instruments Incorporated

11.8.7.6.23 CRC_SCOUNT_REG2 Register (Offset = 84h) [reset = 0h]

CRC_SCOUNT_REG2 is shown in Figure 11-595 and described in Table 11-1803.

Return to the Table 11-1780.

Channel 2 preload register for the sector count

Figure 11-595. CRC_SCOUNT_REG2 Register

31	30	29	28	27	26	25	24	23	22	21	20	19	18	17	16	15	14	13	12	11	10	9	8	7	6	5	4	3	2	1	0
RESERVED																CRC_SEC_COUNT2															
R-0h																R/W-0h															

Table 11-1803. CRC_SCOUNT_REG2 Register Field Descriptions

Bit	Field	Type	Reset	Description
31-16	RESERVED	R	0h	
15-0	CRC_SEC_COUNT2	R/W	0h	Channel 2 Sector Counter Preload Register. This register con- tains the number of sectors in one block of memory.

Copyright © 2025 Texas Instruments Incorporated

11.8.7.6.24 CRC_CURSEC_REG2 Register (Offset = 88h) [reset = 0h]

CRC_CURSEC_REG2 is shown in Figure 11-596 and described in Table 11-1804.

Return to the Table 11-1780.

Channel 2 current sector register contains the sector number which causes CRC fail-ure

Figure 11-596. CRC_CURSEC_REG2 Register

31	30	29	28	27	26	25	24	23	22	21	20	19	18	17	16	15	14	13	12	11	10	9	8	7	6	5	4	3	2	1	0
RESERVED																CRC_CURSEC2															
R-0h																R/W-0h															

Table 11-1804. CRC_CURSEC_REG2 Register Field Descriptions

Bit	Field	Type	Reset	Description
31-16	RESERVED	R	0h	
15-0	CRC_CURSEC2	R/W	0h	Channel 2 Current Sector ID Register. In AUTO mode, this register contains the current sector number of which the signature verification fails. The sector counter is a free running up counter. When a sector fails, the erroneous sector number is logged into current sector ID register and the CRC fail interrupt is generated The sector ID register is frozen until it is read and the CRC fail status bit is cleared by CPU. While it is frozen, it does not capture another erroneous sector number. When this condition happens, an overrun interrupt is generated instead. Once the register is read and the CRC fail interrupt flag is cleared it can capture new erro- neous sector number.

Copyright © 2025 Texas Instruments Incorporated

11.8.7.6.25 CRC_WDTOPLD2 Register (Offset = 8Ch) [reset = 0h]

CRC_WDTOPLD2 is shown in Figure 11-597 and described in Table 11-1805.

Return to the Table 11-1780.

Channel 2 timeout pre-load value to check if within a given time DMA initiates a block transfer

Figure 11-597. CRC_WDTOPLD2 Register

31	30	29	28	27	26	25	24	23	22	21	20	19	18	17	16	15	14	13	12	11	10	9	8	7	6	5	4	3	2	1	0
RESERVED								CRC_WDTOPLD2																							
R-0h								R/W-0h																							

Table 11-1805. CRC_WDTOPLD2 Register Field Descriptions

Bit	Field	Type	Reset	Description
31-24	RESERVED	R	0h	
23-0	CRC_WDTOPLD2	R/W	0h	Channel 2 Watchdog Timeout Counter Preload Register. This register contains the number of clock cycles within which the DMA must transfer the next block of data patterns.

Copyright © 2025 Texas Instruments Incorporated

11.8.7.6.26 CRC_BCTOPLD2 Register (Offset = 90h) [reset = 0h]

CRC_BCTOPLD2 is shown in Figure 11-598 and described in Table 11-1806.

Return to the Table 11-1780.

Channel 2 timeout pre-load value to check if one block of patterns are compressed with a given time

Figure 11-598. CRC_BCTOPLD2 Register

31	30	29	28	27	26	25	24	23	22	21	20	19	18	17	16	15	14	13	12	11	10	9	8	7	6	5	4	3	2	1	0
RESERVED								CRC_BCTOPLD2																							
R-0h								R/W-0h																							

Table 11-1806. CRC_BCTOPLD2 Register Field Descriptions

Bit	Field	Type	Reset	Description
31-24	RESERVED	R	0h	
23-0	CRC_BCTOPLD2	R/W	0h	Channel 2 Block Complete Timeout Counter Preload Regis- ter. This register contains the number of clock cycles within which the CRC for an entire block needs to complete before a timeout interrupt is generated.

Copyright © 2025 Texas Instruments Incorporated

11.8.7.6.27 PSA_SIGREGL2 Register (Offset = A0h) [reset = 0h]

PSA_SIGREGL2 is shown in Figure 11-599 and described in Table 11-1807.

Return to the Table 11-1780.

Channel 2 PSA signature low register

Figure 11-599. PSA_SIGREGL2 Register

31	30	29	28	27	26	25	24	23	22	21	20	19	18	17	16	15	14	13	12	11	10	9	8	7	6	5	4	3	2	1	0
PSASIG2_31_0																															
R/W-0h																															

Table 11-1807. PSA_SIGREGL2 Register Field Descriptions

Bit	Field	Type	Reset	Description
31-0	PSASIG2_31_0	R/W	0h	Channel 2 PSA Signature Low Register. This register contains the value stored at PSASIG2[31:0] register.

Copyright © 2025 Texas Instruments Incorporated

11.8.7.6.28 PSA_SIGREGH2 Register (Offset = A4h) [reset = 0h]

PSA_SIGREGH2 is shown in Figure 11-600 and described in Table 11-1808.

Return to the Table 11-1780.

Channel 2 PSA signature high register

Figure 11-600. PSA_SIGREGH2 Register

31	30	29	28	27	26	25	24	23	22	21	20	19	18	17	16	15	14	13	12	11	10	9	8	7	6	5	4	3	2	1	0
PSA_SIG2_63_32																															
R/W-0h																															

Table 11-1808. PSA_SIGREGH2 Register Field Descriptions

Bit	Field	Type	Reset	Description
31-0	PSA_SIG2_63_32	R/W	0h	Channel 2 PSA Signature High Register. This register contains the value stored at PSASIG2[63:32] register.

Copyright © 2025 Texas Instruments Incorporated

11.8.7.6.29 CRC_REGL2 Register (Offset = A8h) [reset = 0h]

CRC_REGL2 is shown in Figure 11-601 and described in Table 11-1809.

Return to the Table 11-1780.

Channel 2 CRC value low register

Figure 11-601. CRC_REGL2 Register

31	30	29	28	27	26	25	24	23	22	21	20	19	18	17	16	15	14	13	12	11	10	9	8	7	6	5	4	3	2	1	0
CRC2_31_0																															
R/W-0h																															

Table 11-1809. CRC_REGL2 Register Field Descriptions

Bit	Field	Type	Reset	Description
31-0	CRC2_31_0	R/W	0h	Channel 2 CRC Value Low Register. This register contains the current known good signature value stored at CRC2[31:0] regis- ter.

Copyright © 2025 Texas Instruments Incorporated

11.8.7.6.30 CRC_REGH2 Register (Offset = ACh) [reset = 0h]

CRC_REGH2 is shown in Figure 11-602 and described in Table 11-1810.

Return to the Table 11-1780.

Channel 2 CRC value high register

Figure 11-602. CRC_REGH2 Register

31	30	29	28	27	26	25	24	23	22	21	20	19	18	17	16	15	14	13	12	11	10	9	8	7	6	5	4	3	2	1	0
CRC2_63_32																															
R/W-0h																															

Table 11-1810. CRC_REGH2 Register Field Descriptions

Bit	Field	Type	Reset	Description
31-0	CRC2_63_32	R/W	0h	Channel 2 CRC Value High Register. This register contains the current known good signature value stored at CRC2[63:32] register.

Copyright © 2025 Texas Instruments Incorporated

11.8.7.6.31 PSA_SECSIGREGL2 Register (Offset = B0h) [reset = 0h]

PSA_SECSIGREGL2 is shown in Figure 11-603 and described in Table 11-1811.

Return to the Table 11-1780.

Channel 2 PSA sector signature low regis-ter

Figure 11-603. PSA_SECSIGREGL2 Register

31	30	29	28	27	26	25	24	23	22	21	20	19	18	17	16	15	14	13	12	11	10	9	8	7	6	5	4	3	2	1	0
PSASECSIG2_31_0																															
R-0h																															

Table 11-1811. PSA_SECSIGREGL2 Register Field Descriptions

Bit	Field	Type	Reset	Description
31-0	PSASECSIG2_31_0	R	0h	Channel 2 PSA Sector Signature Low Register. This register contains the value stored at PSASECSIG2[31:0] register.

Copyright © 2025 Texas Instruments Incorporated

11.8.7.6.32 PSA_SECSIGREGH2 Register (Offset = B4h) [reset = 0h]

PSA_SECSIGREGH2 is shown in Figure 11-604 and described in Table 11-1812.

Return to the Table 11-1780.

Channel 2 PSA sector signature high regis-ter

Figure 11-604. PSA_SECSIGREGH2 Register

31	30	29	28	27	26	25	24	23	22	21	20	19	18	17	16	15	14	13	12	11	10	9	8	7	6	5	4	3	2	1	0
PSASECSIG2_63_32																															
R-0h																															

Table 11-1812. PSA_SECSIGREGH2 Register Field Descriptions

Bit	Field	Type	Reset	Description
31-0	PSASECSIG2_63_32	R	0h	Channel 2 PSA Sector Signature High Register. This register contains the value stored at PSASECSIG2[63:32] register.

Copyright © 2025 Texas Instruments Incorporated

11.8.7.6.33 RAW_DATAREGL2 Register (Offset = B8h) [reset = 0h]

RAW_DATAREGL2 is shown in Figure 11-605 and described in Table 11-1813.

Return to the Table 11-1780.

Channel 2 un-compressed raw data low register

Figure 11-605. RAW_DATAREGL2 Register

31	30	29	28	27	26	25	24	23	22	21	20	19	18	17	16	15	14	13	12	11	10	9	8	7	6	5	4	3	2	1	0
RAW_DATA2_31_0																															
R-0h																															

Table 11-1813. RAW_DATAREGL2 Register Field Descriptions

Bit	Field	Type	Reset	Description
31-0	RAW_DATA2_31_0	R	0h	Channel 2 Raw Data Low Register. This register contains bit 31:0 of the un-compressed raw data.

Copyright © 2025 Texas Instruments Incorporated

11.8.7.6.34 RAW_DATAREGH2 Register (Offset = BCh) [reset = 0h]

RAW_DATAREGH2 is shown in Figure 11-606 and described in Table 11-1814.

Return to the Table 11-1780.

Channel 2 un-compressed raw data high Register

Figure 11-606. RAW_DATAREGH2 Register

31	30	29	28	27	26	25	24	23	22	21	20	19	18	17	16	15	14	13	12	11	10	9	8	7	6	5	4	3	2	1	0
RAW_DATA2_63_32																															
R-0h																															

Table 11-1814. RAW_DATAREGH2 Register Field Descriptions

Bit	Field	Type	Reset	Description
31-0	RAW_DATA2_63_32	R	0h	Channel 2 Raw Data High Register. This register contains bit 63:32 of the un-compressed raw data.

Copyright © 2025 Texas Instruments Incorporated

11.8.7.6.35 CRC_PCOUNT_REG3 Register (Offset = C0h) [reset = 0h]

CRC_PCOUNT_REG3 is shown in Figure 11-607 and described in Table 11-1815.

Return to the Table 11-1780.

Channel 3 preload register for the pattern count

Figure 11-607. CRC_PCOUNT_REG3 Register

31	30	29	28	27	26	25	24	23	22	21	20	19	18	17	16	15	14	13	12	11	10	9	8	7	6	5	4	3	2	1	0
RESERVED												NU41																			
R-0h												R-0h																			

Table 11-1815. CRC_PCOUNT_REG3 Register Field Descriptions

Bit	Field	Type	Reset	Description
31-20	RESERVED	R	0h	
19-0	NU41	R	0h	Reserved

Copyright © 2025 Texas Instruments Incorporated

11.8.7.6.36 CRC_SCOUNT_REG3 Register (Offset = C4h) [reset = 0h]

CRC_SCOUNT_REG3 is shown in Figure 11-608 and described in Table 11-1816.

Return to the Table 11-1780.

Channel 3 preload register for the sector count

Figure 11-608. CRC_SCOUNT_REG3 Register

31	30	29	28	27	26	25	24	23	22	21	20	19	18	17	16	15	14	13	12	11	10	9	8	7	6	5	4	3	2	1	0
RESERVED																NU42															
R-0h																R-0h															

Table 11-1816. CRC_SCOUNT_REG3 Register Field Descriptions

Bit	Field	Type	Reset	Description
31-16	RESERVED	R	0h	
15-0	NU42	R	0h	Reserved

Copyright © 2025 Texas Instruments Incorporated

11.8.7.6.37 CRC_CURSEC_REG3 Register (Offset = C8h) [reset = 0h]

CRC_CURSEC_REG3 is shown in Figure 11-609 and described in Table 11-1817.

Return to the Table 11-1780.

Channel 3 current sector register contains the sector number which causes CRC fail-ure

Figure 11-609. CRC_CURSEC_REG3 Register

31	30	29	28	27	26	25	24	23	22	21	20	19	18	17	16	15	14	13	12	11	10	9	8	7	6	5	4	3	2	1	0
RESERVED																NU43															
R-0h																R-0h															

Table 11-1817. CRC_CURSEC_REG3 Register Field Descriptions

Bit	Field	Type	Reset	Description
31-16	RESERVED	R	0h	
15-0	NU43	R	0h	Reserved

Copyright © 2025 Texas Instruments Incorporated

11.8.7.6.38 CRC_WDTOPLD3 Register (Offset = CCh) [reset = 0h]

CRC_WDTOPLD3 is shown in Figure 11-610 and described in Table 11-1818.

Return to the Table 11-1780.

Channel 3 timeout pre-load value to check if within a given time DMA initiates a block transfer

Figure 11-610. CRC_WDTOPLD3 Register

31	30	29	28	27	26	25	24	23	22	21	20	19	18	17	16	15	14	13	12	11	10	9	8	7	6	5	4	3	2	1	0
RESERVED								NU44																							
R-0h								R-0h																							

Table 11-1818. CRC_WDTOPLD3 Register Field Descriptions

Bit	Field	Type	Reset	Description
31-24	RESERVED	R	0h	
23-0	NU44	R	0h	Reserved

Copyright © 2025 Texas Instruments Incorporated

11.8.7.6.39 CRC_BCTOPLD3 Register (Offset = D0h) [reset = 0h]

CRC_BCTOPLD3 is shown in Figure 11-611 and described in Table 11-1819.

Return to the Table 11-1780.

Channel 3 timeout pre-load value to check if one block of patterns are compressed with a given time

Figure 11-611. CRC_BCTOPLD3 Register

31	30	29	28	27	26	25	24	23	22	21	20	19	18	17	16	15	14	13	12	11	10	9	8	7	6	5	4	3	2	1	0
RESERVED								NU45																							
R-0h								R-0h																							

Table 11-1819. CRC_BCTOPLD3 Register Field Descriptions

Bit	Field	Type	Reset	Description
31-24	RESERVED	R	0h	
23-0	NU45	R	0h	Reserved

Copyright © 2025 Texas Instruments Incorporated

11.8.7.6.40 PSA_SIGREGL3 Register (Offset = E0h) [reset = 0h]

PSA_SIGREGL3 is shown in Figure 11-612 and described in Table 11-1820.

Return to the Table 11-1780.

Channel 3 PSA signature low register

Figure 11-612. PSA_SIGREGL3 Register

31	30	29	28	27	26	25	24	23	22	21	20	19	18	17	16	15	14	13	12	11	10	9	8	7	6	5	4	3	2	1	0
NU46																															
R-0h																															

Table 11-1820. PSA_SIGREGL3 Register Field Descriptions

Bit	Field	Type	Reset	Description
31-0	NU46	R	0h	Reserved

Copyright © 2025 Texas Instruments Incorporated

11.8.7.6.41 PSA_SIGREGH3 Register (Offset = E4h) [reset = 0h]

PSA_SIGREGH3 is shown in Figure 11-613 and described in Table 11-1821.

Return to the Table 11-1780.

Channel 3 PSA signature high register

Figure 11-613. PSA_SIGREGH3 Register

31	30	29	28	27	26	25	24	23	22	21	20	19	18	17	16	15	14	13	12	11	10	9	8	7	6	5	4	3	2	1	0
NU47																															
R-0h																															

Table 11-1821. PSA_SIGREGH3 Register Field Descriptions

Bit	Field	Type	Reset	Description
31-0	NU47	R	0h	Reserved

Copyright © 2025 Texas Instruments Incorporated

11.8.7.6.42 CRC_REGL3 Register (Offset = E8h) [reset = 0h]

CRC_REGL3 is shown in Figure 11-614 and described in Table 11-1822.

Return to the Table 11-1780.

Channel 3 CRC value low register

Figure 11-614. CRC_REGL3 Register

31	30	29	28	27	26	25	24	23	22	21	20	19	18	17	16	15	14	13	12	11	10	9	8	7	6	5	4	3	2	1	0
NU48																															
R-0h																															

Table 11-1822. CRC_REGL3 Register Field Descriptions

Bit	Field	Type	Reset	Description
31-0	NU48	R	0h	Reserved

Copyright © 2025 Texas Instruments Incorporated

11.8.7.6.43 CRC_REGH3 Register (Offset = ECh) [reset = 0h]

CRC_REGH3 is shown in Figure 11-615 and described in Table 11-1823.

Return to the Table 11-1780.

Channel 3 CRC value high register

Figure 11-615. CRC_REGH3 Register

31	30	29	28	27	26	25	24	23	22	21	20	19	18	17	16	15	14	13	12	11	10	9	8	7	6	5	4	3	2	1	0
NU49																															
R-0h																															

Table 11-1823. CRC_REGH3 Register Field Descriptions

Bit	Field	Type	Reset	Description
31-0	NU49	R	0h	Reserved

Copyright © 2025 Texas Instruments Incorporated

11.8.7.6.44 PSA_SECSIGREGL3 Register (Offset = F0h) [reset = 0h]

PSA_SECSIGREGL3 is shown in Figure 11-616 and described in Table 11-1824.

Return to the Table 11-1780.

Channel 3 PSA sector signature low regis-ter

Figure 11-616. PSA_SECSIGREGL3 Register

31	30	29	28	27	26	25	24	23	22	21	20	19	18	17	16	15	14	13	12	11	10	9	8	7	6	5	4	3	2	1	0
NU50																															
R-0h																															

Table 11-1824. PSA_SECSIGREGL3 Register Field Descriptions

Bit	Field	Type	Reset	Description
31-0	NU50	R	0h	Reserved

Copyright © 2025 Texas Instruments Incorporated

11.8.7.6.45 PSA_SECSIGREGH3 Register (Offset = F4h) [reset = 0h]

PSA_SECSIGREGH3 is shown in Figure 11-617 and described in Table 11-1825.

Return to the Table 11-1780.

Channel 3 PSA sector signature high regis-ter

Figure 11-617. PSA_SECSIGREGH3 Register

31	30	29	28	27	26	25	24	23	22	21	20	19	18	17	16	15	14	13	12	11	10	9	8	7	6	5	4	3	2	1	0
NU51																															
R-0h																															

Table 11-1825. PSA_SECSIGREGH3 Register Field Descriptions

Bit	Field	Type	Reset	Description
31-0	NU51	R	0h	Reserved

Copyright © 2025 Texas Instruments Incorporated

11.8.7.6.46 RAW_DATAREGL3 Register (Offset = F8h) [reset = 0h]

RAW_DATAREGL3 is shown in Figure 11-618 and described in Table 11-1826.

Return to the Table 11-1780.

Channel 3 un-compressed raw data low register

Figure 11-618. RAW_DATAREGL3 Register

31	30	29	28	27	26	25	24	23	22	21	20	19	18	17	16	15	14	13	12	11	10	9	8	7	6	5	4	3	2	1	0
NU52																															
R-0h																															

Table 11-1826. RAW_DATAREGL3 Register Field Descriptions

Bit	Field	Type	Reset	Description
31-0	NU52	R	0h	Reserved

Copyright © 2025 Texas Instruments Incorporated

11.8.7.6.47 RAW_DATAREGH3 Register (Offset = FCh) [reset = 0h]

RAW_DATAREGH3 is shown in Figure 11-619 and described in Table 11-1827.

Return to the Table 11-1780.

Channel 3 un-compressed raw data high Register

Figure 11-619. RAW_DATAREGH3 Register

31	30	29	28	27	26	25	24	23	22	21	20	19	18	17	16	15	14	13	12	11	10	9	8	7	6	5	4	3	2	1	0
NU53																															
R-0h																															

Table 11-1827. RAW_DATAREGH3 Register Field Descriptions

Bit	Field	Type	Reset	Description
31-0	NU53	R	0h	Reserved

Copyright © 2025 Texas Instruments Incorporated

11.8.7.6.48 CRC_PCOUNT_REG4 Register (Offset = 100h) [reset = 0h]

CRC_PCOUNT_REG4 is shown in Figure 11-620 and described in Table 11-1828.

Return to the Table 11-1780.

Channel 4 preload register for the pattern count

Figure 11-620. CRC_PCOUNT_REG4 Register

31	30	29	28	27	26	25	24	23	22	21	20	19	18	17	16	15	14	13	12	11	10	9	8	7	6	5	4	3	2	1	0
RESERVED												NU54																			
R-0h												R-0h																			

Table 11-1828. CRC_PCOUNT_REG4 Register Field Descriptions

Bit	Field	Type	Reset	Description
31-20	RESERVED	R	0h	
19-0	NU54	R	0h	Reserved

Copyright © 2025 Texas Instruments Incorporated

11.8.7.6.49 CRC_SCOUNT_REG4 Register (Offset = 104h) [reset = 0h]

CRC_SCOUNT_REG4 is shown in Figure 11-621 and described in Table 11-1829.

Return to the Table 11-1780.

Channel 4 preload register for the sector count

Figure 11-621. CRC_SCOUNT_REG4 Register

31	30	29	28	27	26	25	24	23	22	21	20	19	18	17	16	15	14	13	12	11	10	9	8	7	6	5	4	3	2	1	0
RESERVED																NU55															
R-0h																R-0h															

Table 11-1829. CRC_SCOUNT_REG4 Register Field Descriptions

Bit	Field	Type	Reset	Description
31-16	RESERVED	R	0h	
15-0	NU55	R	0h	Reserved

Copyright © 2025 Texas Instruments Incorporated

11.8.7.6.50 CRC_CURSEC_REG4 Register (Offset = 108h) [reset = 0h]

CRC_CURSEC_REG4 is shown in Figure 11-622 and described in Table 11-1830.

Return to the Table 11-1780.

Channel 4 current sector register contains the sector number which causes CRC fail-ure

Figure 11-622. CRC_CURSEC_REG4 Register

31	30	29	28	27	26	25	24	23	22	21	20	19	18	17	16	15	14	13	12	11	10	9	8	7	6	5	4	3	2	1	0
RESERVED																NU56															
R-0h																R-0h															

Table 11-1830. CRC_CURSEC_REG4 Register Field Descriptions

Bit	Field	Type	Reset	Description
31-16	RESERVED	R	0h	
15-0	NU56	R	0h	Reserved

Copyright © 2025 Texas Instruments Incorporated

11.8.7.6.51 CRC_WDTOPLD4 Register (Offset = 10Ch) [reset = 0h]

CRC_WDTOPLD4 is shown in Figure 11-623 and described in Table 11-1831.

Return to the Table 11-1780.

Channel 4 timeout pre-load value to check if within a given time DMA initiates a block transfer

Figure 11-623. CRC_WDTOPLD4 Register

31	30	29	28	27	26	25	24	23	22	21	20	19	18	17	16	15	14	13	12	11	10	9	8	7	6	5	4	3	2	1	0
RESERVED								NU57																							
R-0h								R-0h																							

Table 11-1831. CRC_WDTOPLD4 Register Field Descriptions

Bit	Field	Type	Reset	Description
31-24	RESERVED	R	0h	
23-0	NU57	R	0h	Reserved

Copyright © 2025 Texas Instruments Incorporated

11.8.7.6.52 CRC_BCTOPLD4 Register (Offset = 110h) [reset = 0h]

CRC_BCTOPLD4 is shown in Figure 11-624 and described in Table 11-1832.

Return to the Table 11-1780.

Channel 4 timeout pre-load value to check if one block of patterns are compressed with a given time

Figure 11-624. CRC_BCTOPLD4 Register

31	30	29	28	27	26	25	24	23	22	21	20	19	18	17	16	15	14	13	12	11	10	9	8	7	6	5	4	3	2	1	0
RESERVED								NU58																							
R-0h								R-0h																							

Table 11-1832. CRC_BCTOPLD4 Register Field Descriptions

Bit	Field	Type	Reset	Description
31-24	RESERVED	R	0h	
23-0	NU58	R	0h	Reserved

Copyright © 2025 Texas Instruments Incorporated

11.8.7.6.53 PSA_SIGREGL4 Register (Offset = 120h) [reset = 0h]

PSA_SIGREGL4 is shown in Figure 11-625 and described in Table 11-1833.

Return to the Table 11-1780.

Channel 4 PSA signature low register

Figure 11-625. PSA_SIGREGL4 Register

31	30	29	28	27	26	25	24	23	22	21	20	19	18	17	16	15	14	13	12	11	10	9	8	7	6	5	4	3	2	1	0
NU59																															
R-0h																															

Table 11-1833. PSA_SIGREGL4 Register Field Descriptions

Bit	Field	Type	Reset	Description
31-0	NU59	R	0h	Reserved

Copyright © 2025 Texas Instruments Incorporated

11.8.7.6.54 PSA_SIGREGH4 Register (Offset = 124h) [reset = 0h]

PSA_SIGREGH4 is shown in Figure 11-626 and described in Table 11-1834.

Return to the Table 11-1780.

Channel 4 PSA signature high register

Figure 11-626. PSA_SIGREGH4 Register

31	30	29	28	27	26	25	24	23	22	21	20	19	18	17	16	15	14	13	12	11	10	9	8	7	6	5	4	3	2	1	0
NU60																															
R-0h																															

Table 11-1834. PSA_SIGREGH4 Register Field Descriptions

Bit	Field	Type	Reset	Description
31-0	NU60	R	0h	Reserved

Copyright © 2025 Texas Instruments Incorporated

11.8.7.6.55 CRC_REGL4 Register (Offset = 128h) [reset = 0h]

CRC_REGL4 is shown in Figure 11-627 and described in Table 11-1835.

Return to the Table 11-1780.

Channel 4 CRC value low register

Figure 11-627. CRC_REGL4 Register

31	30	29	28	27	26	25	24	23	22	21	20	19	18	17	16	15	14	13	12	11	10	9	8	7	6	5	4	3	2	1	0
NU61																															
R-0h																															

Table 11-1835. CRC_REGL4 Register Field Descriptions

Bit	Field	Type	Reset	Description
31-0	NU61	R	0h	Reserved

Copyright © 2025 Texas Instruments Incorporated

11.8.7.6.56 CRC_REGH4 Register (Offset = 12Ch) [reset = 0h]

CRC_REGH4 is shown in Figure 11-628 and described in Table 11-1836.

Return to the Table 11-1780.

Channel 4 CRC value high register

Figure 11-628. CRC_REGH4 Register

31	30	29	28	27	26	25	24	23	22	21	20	19	18	17	16	15	14	13	12	11	10	9	8	7	6	5	4	3	2	1	0
NU62																															
R-0h																															

Table 11-1836. CRC_REGH4 Register Field Descriptions

Bit	Field	Type	Reset	Description
31-0	NU62	R	0h	Reserved

Copyright © 2025 Texas Instruments Incorporated

11.8.7.6.57 PSA_SECSIGREGL4 Register (Offset = 130h) [reset = 0h]

PSA_SECSIGREGL4 is shown in Figure 11-629 and described in Table 11-1837.

Return to the Table 11-1780.

Channel 4 PSA sector signature low regis-ter

Figure 11-629. PSA_SECSIGREGL4 Register

31	30	29	28	27	26	25	24	23	22	21	20	19	18	17	16	15	14	13	12	11	10	9	8	7	6	5	4	3	2	1	0
NU63																															
R-0h																															

Table 11-1837. PSA_SECSIGREGL4 Register Field Descriptions

Bit	Field	Type	Reset	Description
31-0	NU63	R	0h	Reserved

Copyright © 2025 Texas Instruments Incorporated

11.8.7.6.58 PSA_SECSIGREGH4 Register (Offset = 134h) [reset = 0h]

PSA_SECSIGREGH4 is shown in Figure 11-630 and described in Table 11-1838.

Return to the Table 11-1780.

Channel 4 PSA sector signature high regis-ter

Figure 11-630. PSA_SECSIGREGH4 Register

31	30	29	28	27	26	25	24	23	22	21	20	19	18	17	16	15	14	13	12	11	10	9	8	7	6	5	4	3	2	1	0
NU64																															
R-0h																															

Table 11-1838. PSA_SECSIGREGH4 Register Field Descriptions

Bit	Field	Type	Reset	Description
31-0	NU64	R	0h	Reserved

Copyright © 2025 Texas Instruments Incorporated

11.8.7.6.59 RAW_DATAREGL4 Register (Offset = 138h) [reset = 0h]

RAW_DATAREGL4 is shown in Figure 11-631 and described in Table 11-1839.

Return to the Table 11-1780.

Channel 4 un-compressed raw data low register

Figure 11-631. RAW_DATAREGL4 Register

31	30	29	28	27	26	25	24	23	22	21	20	19	18	17	16	15	14	13	12	11	10	9	8	7	6	5	4	3	2	1	0
NU65																															
R-0h																															

Table 11-1839. RAW_DATAREGL4 Register Field Descriptions

Bit	Field	Type	Reset	Description
31-0	NU65	R	0h	Reserved

Copyright © 2025 Texas Instruments Incorporated

11.8.7.6.60 RAW_DATAREGH4 Register (Offset = 13Ch) [reset = 0h]

RAW_DATAREGH4 is shown in Figure 11-632 and described in Table 11-1840.

Return to the Table 11-1780.

Channel 4 un-compressed raw data high Register

Figure 11-632. RAW_DATAREGH4 Register

31	30	29	28	27	26	25	24	23	22	21	20	19	18	17	16	15	14	13	12	11	10	9	8	7	6	5	4	3	2	1	0
NU66																															
R-0h																															

Table 11-1840. RAW_DATAREGH4 Register Field Descriptions

Bit	Field	Type	Reset	Description
31-0	NU66	R	0h	Reserved

Copyright © 2025 Texas Instruments Incorporated

11.8.7.6.61 MCRC_BUS_SEL Register (Offset = 140h) [reset = 7h]

MCRC_BUS_SEL is shown in Figure 11-633 and described in Table 11-1841.

Return to the Table 11-1780.

Disables either or all tracing of data buses

Figure 11-633. MCRC_BUS_SEL Register

31	30	29	28	27	26	25	24
NU67							
R-0h							
23	22	21	20	19	18	17	16
NU67							
R-0h							
15	14	13	12	11	10	9	8
NU67							
R-0h							
7	6	5	4	3	2	1	0
NU67					MEn	DTCMEn	ITCMEn
R-0h					R/W-1h	R/W-1h	R/W-1h

Table 11-1841. MCRC_BUS_SEL Register Field Descriptions

Bit	Field	Type	Reset	Description
31-3	NU67	R	0h	Reserved
2	MEn	R/W	1h	MEn. Enable/disables the tracing of VBUSM 0: Tracing of VBUSM controller bus has been disabled 1: Tracing of VBUSM controller bus has been enabled
1	DTCMEn	R/W	1h	DTCMEn. Enable/disables the tracing of data TCM 0: Tracing of DTCM_ODD and DTCM_EVEN buses have been disabled 1: Tracing of DTCM_ODD and DTCM_EVEN buses have been enabled
0	ITCMEn	R/W	1h	ITCMEn. Enable/disables the tracing of instruction TCM 0: Tracing of ITCM bus has been disabled 1: Tracing of ITCM bus has been enabled

Copyright © 2025 Texas Instruments Incorporated

11.8.7.6.62 MCRC_RESERVED Register (Offset = 144h) [reset = 0h]

MCRC_RESERVED is shown in Figure 11-634 and described in Table 11-1842.

Return to the Table 11-1780.

0x144 to 0x1FF is reserved area.

Figure 11-634. MCRC_RESERVED Register

31	30	29	28	27	26	25	24	23	22	21	20	19	18	17	16	15	14	13	12	11	10	9	8	7	6	5	4	3	2	1	0
NU68																															
R-0h																															

Table 11-1842. MCRC_RESERVED Register Field Descriptions

Bit	Field	Type	Reset	Description
31-0	NU68	R	0h	0x144 to 0x1FF is reserved area.

11.8.8 Safety Modules

11.8.8.1 Core Clock Comparator (CCC) 4351
11.8.8.2 Dual Clock Comparator (DCC) 4352
11.8.8.3 ECC_AGGREGATOR 4372
11.8.8.4 ECC Registers 4379
11.8.8.5 Error Signaling Module (ESM) 4484
11.8.8.6 Cyclic Redudancy Check (CRC) 4525
11.8.8.7 Self-Test Controller (STC) 4610
11.8.8.8 Programmable Built-In Self-Test (PBIST) 4694

Copyright © 2025 Texas Instruments Incorporated

11.8.8.1 Core Clock Comparator (CCC)

11.8.8.1.1 Description

Core Clock Comparator (CCC) supports single-shot and continuous mode of operation, such as DCC. In continuous mode, the programmed values are reloaded after every successful comparison.

The module accepts 7 clock inputs for clock 0 and clock 1. One of these input clocks is selected to counter 0 and counter 1. Counter 0 is a down counter and is preloaded with a value before enabling the module. Counter 1 is an up counter which operates on Clock 1.

At the expiry of counter 0, value in the counter 1 is compared against the programmed expected value of the counter. After a successful comparison, a Done signal is asserted in single-shot mode, whereas in continuous mode, counter 0 is reloaded for the next comparison. Margin value programmed provides the tolerance for the comparison. An error signal is asserted when the counter 1 value differs from the expected value beyond the tolerance range.

When an error occurs, the module stops comparison in both single-shot and continuous mode.

There is a timeout counter functioning on Clock 1. A timeout value must be loaded into the timeout counter before enabling the module. If the timeout counter expires before the expiry of counter 0, an error condition is indicated. In continuous mode, after the successful comparison, the timeout value is also reloaded along with Counter 0.

11.8.8.1.2 Block Diagram

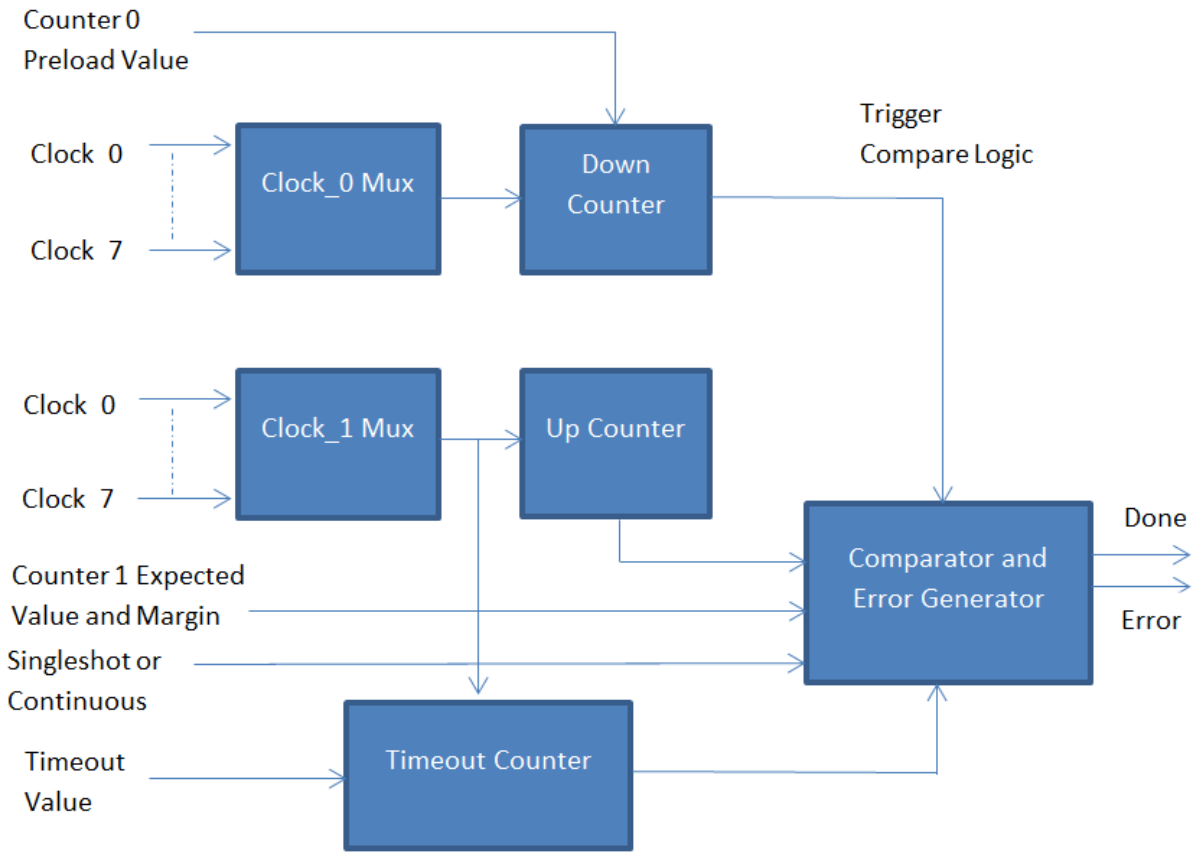

Figure 11-635. CCC Block Diagram

Copyright © 2025 Texas Instruments Incorporated

11.8.8.1.3 Perform Clock Comparison

The following are the steps to perform clock comparison.

1. Select Clock 0.
2. Select Clock 1.
3. Load value for down counting in counter 0.
4. Load expected value of counter 1.
5. Load Margin value for tolerance.
6. Set singleshot or continuous mode.
7. Load timeout value.
8. Enable Module.
9. Wait for Done or Error indication.

11.8.8.1.4 I/O Table

Table 11-1843. I/O Table

Signal	Input/Output	Description
async_rst_n	Input	Module Reset
vbusp_clk	Input	Clock
clock0_src	Input	Input clocks for Counter 0
clock1_src	Input	Input clocks for Counter 1
clock0_sel	Input	Clock Selector for Counter 0
clock1_sel	Input	Clock Selector for Counter 1
count0_expiry_val	Input	Preload Value for Counter 0
count1_expected_val	Input	Expected value of Counter 1
disable_clk_output	Input	Cutoff clocks for the module
enable_module	Input	Enable for Clock comparator
margin_count	Input	Tolerance value for Comparator
singleshot_mode	Input	0->Continuous mode, 1-> Singleshot mode
count1_val_out	Output	Counter 1 value
counter_error	Output	Error Indicator
counter_done	Output	Successful comparison Indicator
mod_status	Output	Internal Status Indicator
async_error_indicator	Output	Error indicator without the synchronizer
timeout_err_count	Input	Preload value for Timeout Counter
atpg_reset_bypass	Input	DFT reset
atpg_clk	Input	DFT clock
icg_te	Input	Control for ICG
atpg_clk_bypass	Input	Control for ATPG clock

11.8.8.1.5 Recommended Programmation

- Clock source 1 must be faster than Clock source 0 for successful comparison of clocks.
- The timeout value must always be loaded for successful comparison. The timeout value must be greater than the duration of the comparison operation.

11.8.8.2 Dual Clock Comparator (DCC)

This section describes the dual-clock comparator (DCC) module.

Copyright © 2025 Texas Instruments Incorporated

11.8.8.2.1 Introduction

The primary purpose of a DCC module is to measure the frequency of a clock signal using a second known clock signal as a reference. Specifically, DCC is designed to detect drifts from the expected clock frequency. This capability can be used to ensure the correct frequency range for several different device clock sources, thereby enhancing the system safety metrics.

11.8.8.2.1.1 Main Features

The main features of each of the DCC modules are:

- Allows application to ensure that a fixed ratio is maintained between frequencies of two clock signals
- Supports the definition of a programmable tolerance window in terms of number of reference clock cycles
- Supports continuous monitoring without requiring application intervention
- Also supports a single-sequence mode for spot measurements
- Allows selection of clock source for each of the counters resulting in several specific use cases

11.8.8.2.1.2 Block Diagram

Figure 11-636 illustrates the main concept of the DCC module.

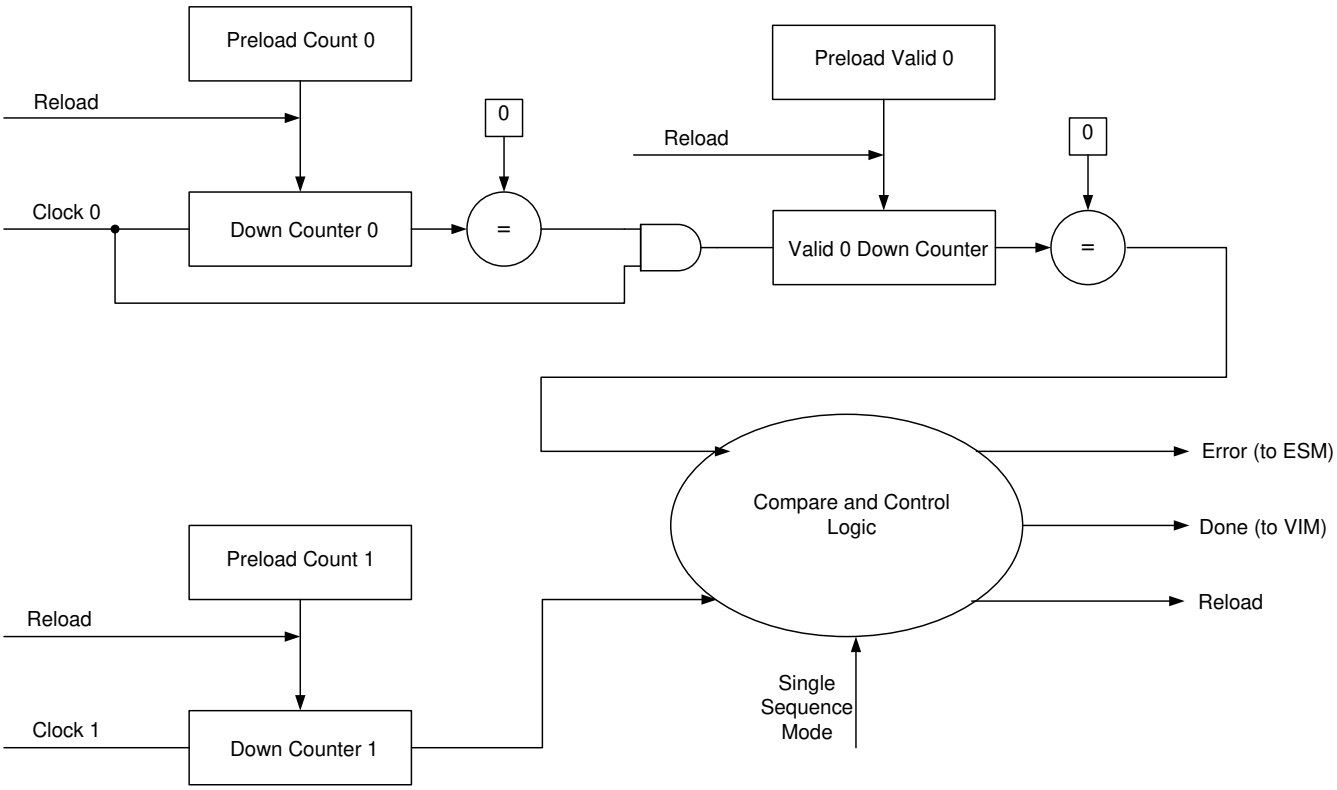

Figure 11-636. Block Diagram

Copyright © 2025 Texas Instruments Incorporated

11.8.8.2.2 Module Operation

As shown in Figure 11-418, the DCC contains two counters – counter0 and counter1, which are driven by two signals – clock0 and clock1. The application programs the seed values for both these counters. The application also configures the tolerance window time by configuring the valid counter for clock0.

Counter0 and counter1 both start counting simultaneously once the DCC is enabled. When counter0 counts down to zero, this automatically triggers the count down of the tolerance window counter (valid0).

The DCC module can be used in two different operating modes:

11.8.8.2.2.1 Continuous Monitoring Mode

In this mode, the DCC is used by the application to ensure that two clock signals maintain the correct frequency ratio. Suppose the application wants to ensure that the PLL output signal (clock source # 1) always maintains a fixed frequency relationship with the main oscillator (clock source # 0).

- In this case, the application can use the main oscillator as the clock0 signal (for counter0 and valid0) and the PLL output as the clock1 (for counter1).
- The seed values of counter0, valid0 and counter1 are selected such that if the actual frequencies of clock0 and clock1 are equal to their expected frequencies, then the counter1 will reach zero either at the same time as counter0 or during the count down of the valid0 counter.
- If the counter1 reaches zero during the count down of the valid0 counter, then all the counters (counter0, valid0, counter1) are reloaded with their initial seed values once valid0 has also counted down to zero.
- This sequence of counting down and checking then continues as long as there is no error, or until the DCC module is disabled.
- The counters also all get reloaded if the application resets and restarts the DCC module.

Error Conditions:

An error condition is generated by any one of the following:

1. Counter1 counts down to 0 before Counter0 reaches 0. This means that clock1 is faster than expected, or clock0 is slower than expected. It includes the case when clock0 is stuck at 1 or 0.
2. Counter1 does not reach 0 even when Counter0 and Valid0 have both reached 0. This means that clock1 is slower than expected. It includes the case when clock1 is stuck at 1 or 0.

Any error freezes the counters from counting. An application may then read out the counter values to help determine what caused the error.

11.8.8.2.2.1.1 Error Conditions

While operating in continuous mode, the counters get reloaded with the seed values and continue counting down under the following conditions:

- The module is reset or restarted by the application, OR
- Counter0, Valid 0 and Counter1 all reach 0 without any error

Copyright © 2025 Texas Instruments Incorporated

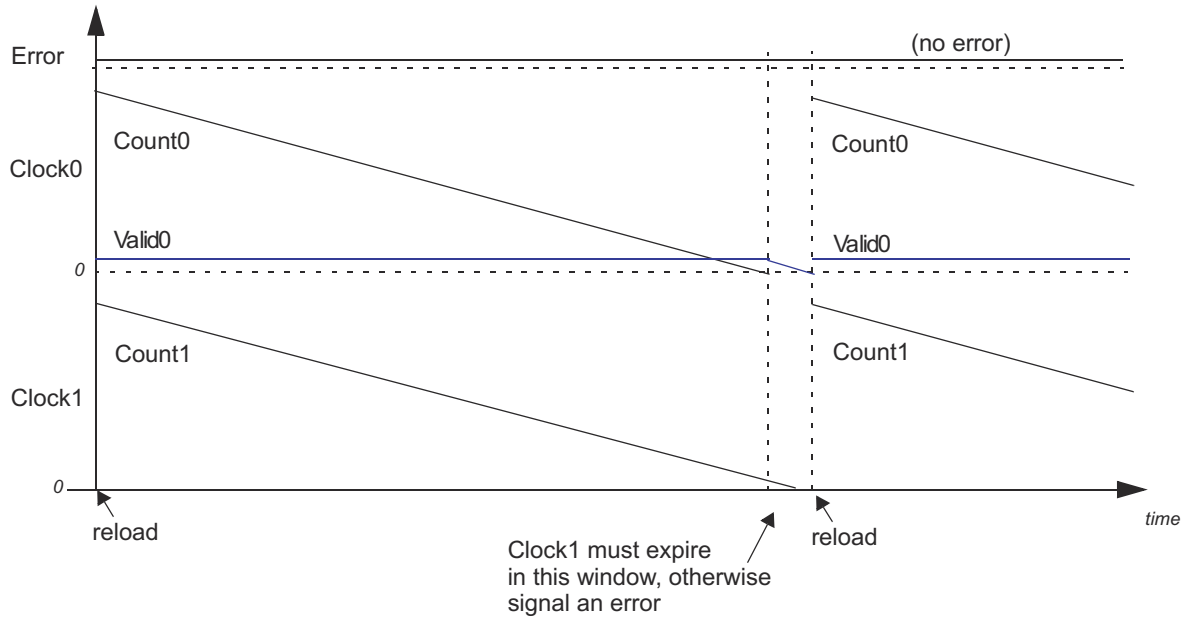

Figure 11-637. Counter Relationship

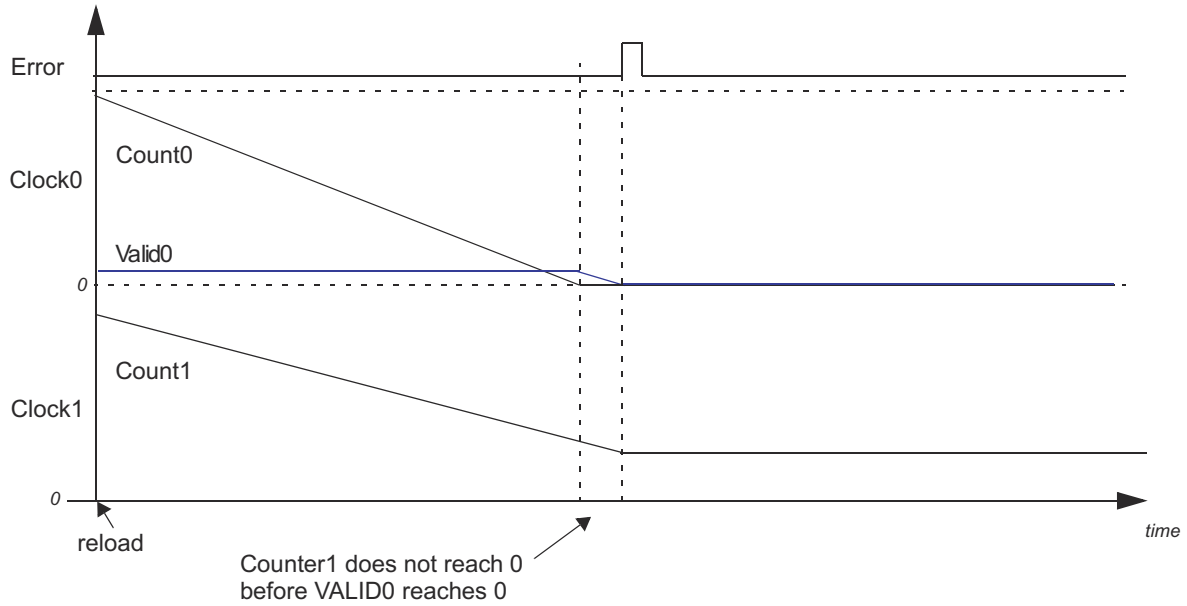

Figure 11-638. Clock1 Slower Than Clock0 - Results in an Error and Stops Counting

Copyright © 2025 Texas Instruments Incorporated

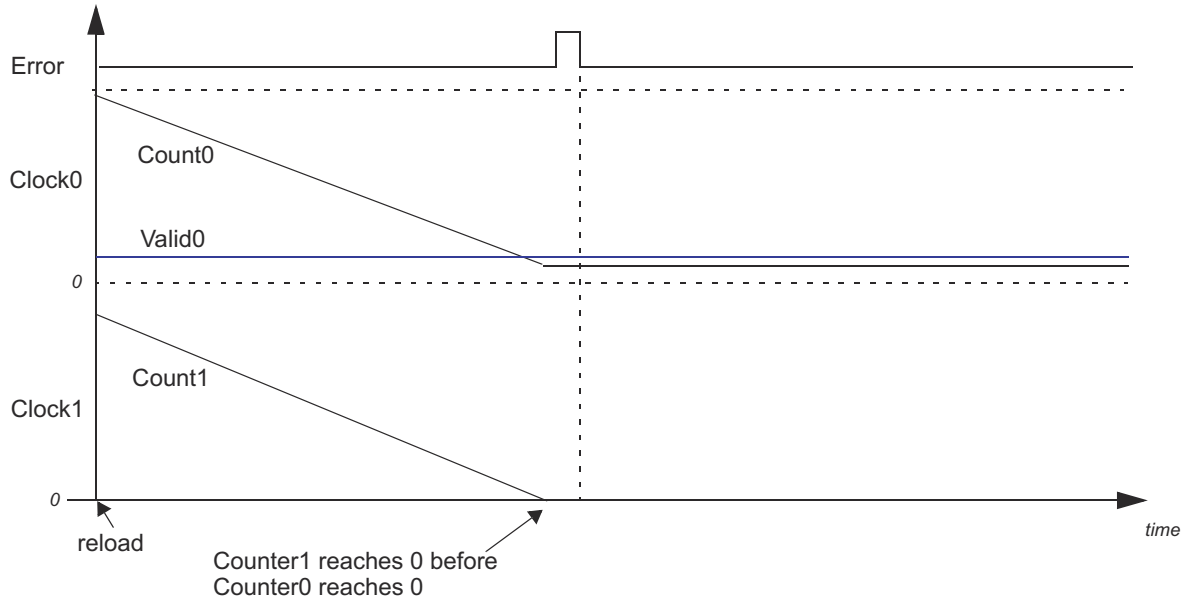

Figure 11-639. Clock1 Faster Than Clock0 - Results in an Error and Stops Counting

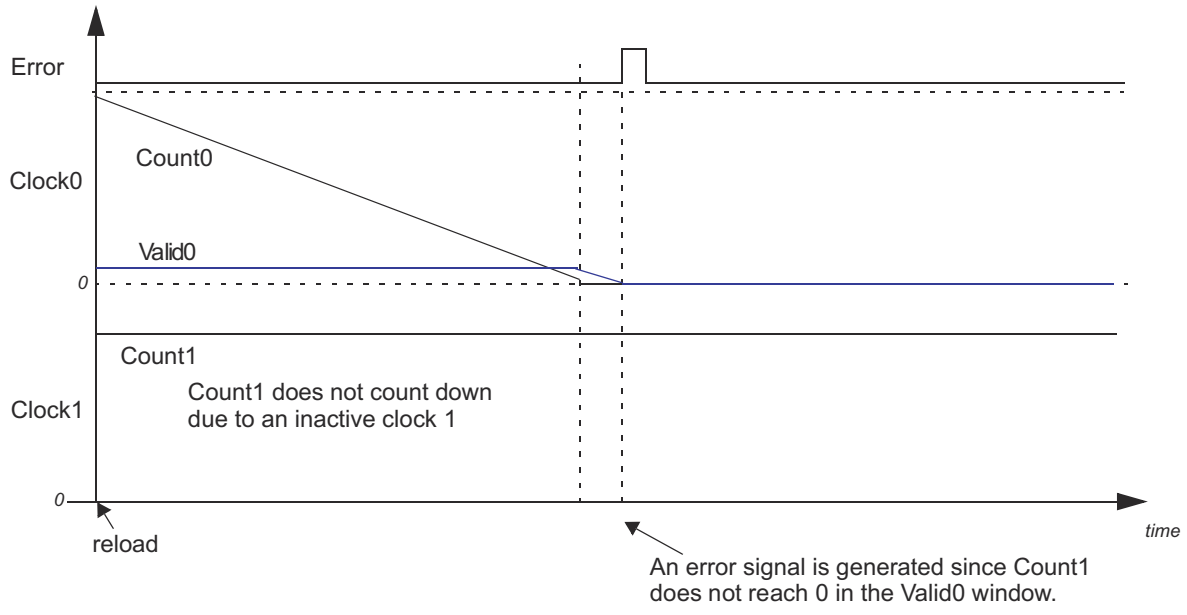

Figure 11-640. Clock1 Not Present - Results in an Error and Stops Counting

Copyright © 2025 Texas Instruments Incorporated

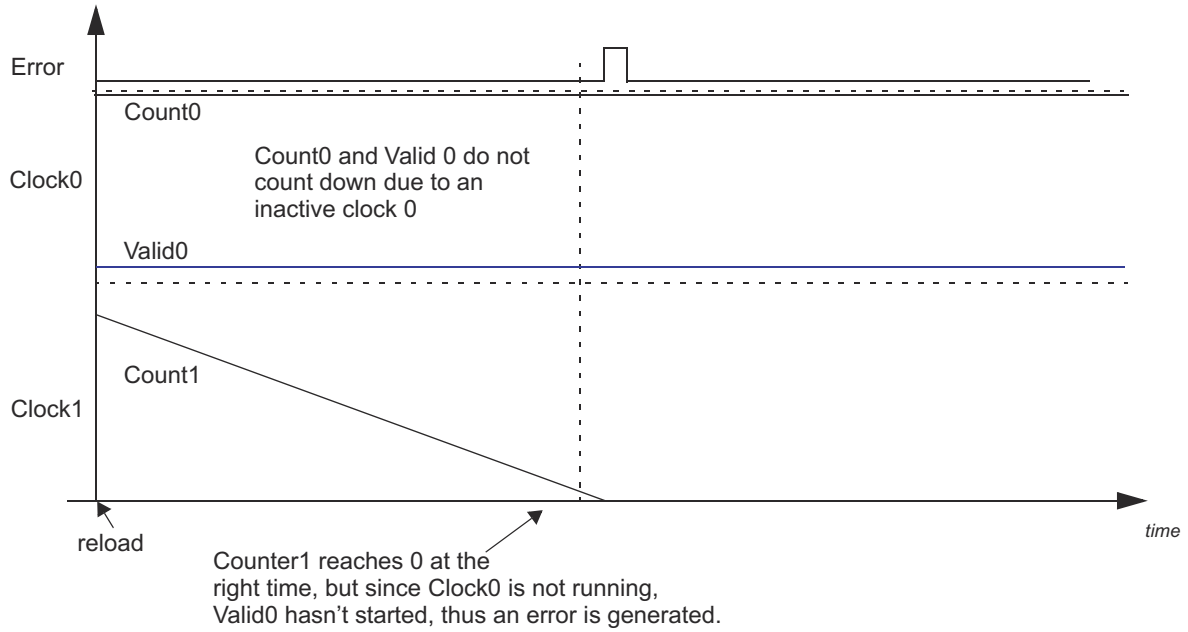

Figure 11-641. Clock0 Not Present - Results in an Error and Stops Counting

11.8.8.2.2.2 Single-Shot Measurement Mode

The DCC module can be programmed to count down one time by enabling the single-shot mode. In this mode, the DCC stops operating when the down counter0 and the valid counter0 reach 0. Alternatively, the DCC can be programmed to stop counting when the down counter1 reaches 0.

At the end of one sequence of counting down in this single-shot mode, the DCC gets disabled automatically, which prevents further counting. This mode is typically used for spot measurements of the frequency of a signal. This frequency could be an unknown for the application before the measurement.

Example Usage of Single-Shot Measurement Mode: Trimming the High-Frequency Low-Power Oscillator

A practical example of the usage of the spot measurement mode is in trimming the HF LPO (clock source # 5) using the main oscillator as a reference. This measurement sequence would proceed as follows:

- The application sets up the seed values for counter0 and valid0 for the duration of the measurement. Suppose the main oscillator frequency is 10 MHz and the intended duration of the measurement is 500 µs. The application needs to configure a seed value of 5000.
- These 5000 counts need to be divided between the counter0 and the valid0 counters. The minimum value for the valid0 seed is 4, so the application can configure counter0 seed value as 4996 and the valid0 seed value as 4.
- Suppose the HF LPO frequency is truly unknown. In this case the application can choose the maximum allowed seed value for counter1. This increases the probability of counter0 and valid0 counting down while the counter1 has still not fully counted down to zero. The maximum allowed seed value for counter1 is 1048575.
- Once the DCC is enabled, the counters counter0 and counter1 both start counting down from their seed values.
- When counter0 reaches zero, it automatically triggers the valid0 counter.
- When valid0 reaches zero, if counter1 is not zero as well, an ERROR status flag is set and a "DCC error" is sent to the ESM. Counter1 is also frozen so that it stops counting down any further. The application can enable an interrupt to be generated from the ESM whenever this DCC error is indicated. Refer the device datasheet to identify the ESM group and channel where the DCC error is connected.
- The DCC error interrupt service routine can then check the value of counter1 when the error was generated. Suppose that the counter1 now reads 1044575. This means that counter1 has counted 1048575 - 1044575,

Copyright © 2025 Texas Instruments Incorporated

or 4000 cycles within the 500-µs measurement period. This means that the average frequency of the HF LPO over this 500-µs period was 4000 cycles / 500 µs, or 8 MHz.
- The application then needs to clear the ERROR status flag and restart the DCC module so that it is ready for the next spot measurement.

If there is no error generated at the end of the sequence, then the DONE status flag is set and a DONE interrupt is generated. The application must clear the DONE flag before restarting the DCC.

The conditions that cause a DCC error are identical between the continuous monitoring mode and the single-shot measurement mode.

Error Conditions:

An error condition is generated by any one of the following:
1. Counter1 counts down to 0 before Counter0 reaches 0. This means that clock1 is faster than expected, or clock0 is slower than expected. It includes the case when clock0 is stuck at 1 or 0.
2. Counter1 does not reach 0 even when Counter0 and Valid0 have both reached 0. This means that clock1 is slower than expected. It includes the case when clock1 is stuck at 1 or 0.

Any error freezes the counters from counting. An application may then read out the counter values to help determine what caused the error.

Freezing Counters when Counter1 Reaches Zero:

The DCC module also allows the counters to be frozen when the counter1 reaches zero. This allows one of the clock sources for counter1 to be used as a reference for measuring one of the clock sources for counter0. The error conditions are the same as those where (counter0=0 and valid0=0) define the condition when the DCC counters are frozen. That is, an error is indicated if coutner0 and valid0 become zero while counter1 is still non-zero. In this case, however, the application would typically set up the seed values such that the counter1 will become zero before counter0. Essentially the measurement period is defined by the seed value of the counter1. Note that this is also an error condition, and the interrupt service routine can use the measurement period and the actual cycles counted by counter1 to determine the frequency of the clock0 signal.

11.8.8.2.3 MSS DCC Integration

4-DCC modules have been instantiated in the SOC as part of MSS. Clocks to the module are mentioned in the following sections.

11.8.8.2.3.1 Input Clock sources

Table 11-1844. MSS_DCCA Clocking

Clock Signal	Description	Source	REG Value for Selection
DCC_INPUT00_CLK	Primary Oscillator Clock	XTALCLK	0x0
DCC_INPUT01_CLK	Primary Oscillator Clock	RCCLK10	0x1
DCC_CLKSRC0_CLK	Counter 1 Clock Source	PLL_CORE_HSDIV0_CLKOUT2	0x0
DCC_CLKSRC1_CLK	Counter 1 Clock Source	MSS_CR5F_CLK	0x1
DCC_CLKSRC2_CLK	Counter 1 Clock Source	SYS_CLK	0x2
DCC_CLKSRC3_CLK	Counter 1 Clock Source	MSS_QSPI_CLK	0x3
DCC_CLKSRC4_CLK	Counter 1 Clock Source	MSS_RTIA_CLK	0x4
DCC_CLKSRC5_CLK	Counter 1 Clock Source	MSS_SPIA_CLK	0x5
DCC_CLKSRC6_CLK	Counter 1 Clock Source	MSS_MCANA_CLK	0x6
DCC_CLKSRC7_CLK	Counter 1 Clock Source	MSS_SCIA_CLK	0x7

Table 11-1845. MSS_DCCB Clocking

Clock Signal	Description	Source	REG Value for Selection
DCC_INPUT00_CLK	Primary Oscillator Clock	XTALCLK	0x0
DCC_INPUT01_CLK	Primary Oscillator Clock	RCCLK10	0x1

Copyright © 2025 Texas Instruments Incorporated

Table 11-1845. MSS_DCCB Clocking (continued)

Clock Signal	Description	Source	REG Value for Selection
DCC_INPUT02_CLK	Primary Oscillator Clock	SYS_CLK	0x2
DCC_CLKSRC0_CLK	Counter 1 Clock Source	PLL_CORE_HSDIV0_CLKOUT1	0x0
DCC_CLKSRC1_CLK	Counter 1 Clock Source	MSS_CR5F_CLK	0x1
DCC_CLKSRC2_CLK	Counter 1 Clock Source	XTALCLK	0x2
DCC_CLKSRC3_CLK	Counter 1 Clock Source	MSS_CPTS_CLK	0x3
DCC_CLKSRC4_CLK	Counter 1 Clock Source	MSS_RTIB_CLK	0x4
DCC_CLKSRC5_CLK	Counter 1 Clock Source	MSS_SPIB_CLK	0x5

Table 11-1846. MSS_DCCC Clocking

Clock Signal	Description	Source	REG Value for Selection
DCC_INPUT00_CLK	Primary Oscillator Clock	XTALCLK	0x0
DCC_INPUT01_CLK	Primary Oscillator Clock	RCCLK10	0x1
DCC_INPUT02_CLK	Primary Oscillator Clock	SYS_CLK	0x2
DCC_CLKSRC0_CLK	Counter 1 Clock Source	PLL_DSS_HSDIV0_CLKOUT2	0x0
DCC_CLKSRC3_CLK	Counter 1 Clock Source	GPIO[0]	0x3
DCC_CLKSRC4_CLK	Counter 1 Clock Source	GPIO[1]	0x4
DCC_CLKSRC5_CLK	Counter 1 Clock Source	GPIO[2]	0x5
DCC_CLKSRC6_CLK	Counter 1 Clock Source	MSS_WDT_CLK	0x6
DCC_CLKSRC7_CLK	Counter 1 Clock Source	XTALCLK	0x7

Table 11-1847. MSS_DCCD Clocking

Clock Signal	Description	Source	REG Value for Selection
DCC_INPUT00_CLK	Primary Oscillator Clock	XTALCLK	0x0
DCC_INPUT01_CLK	Primary Oscillator Clock	RCCLK10	0x1
DCC_INPUT02_CLK	Primary Oscillator Clock	SYS_CLK	0x2
DCC_CLKSRC0_CLK	Counter 1 Clock Source	PLL_PER_HSDIV1_CLKOUT1	0x0
DCC_CLKSRC1_CLK	Counter 1 Clock Source	MSS_WDT_CLK	0x1
DCC_CLKSRC2_CLK	Counter 1 Clock Source	MSS_MCANA_CLK	0x2
DCC_CLKSRC3_CLK	Counter 1 Clock Source	GPIO[8]	0x3
DCC_CLKSRC4_CLK	Counter 1 Clock Source	GPIO[9]	0x4
DCC_CLKSRC5_CLK	Counter 1 Clock Source	GPIO[10]	0x5
DCC_CLKSRC6_CLK	Counter 1 Clock Source	GPIO[0]	0x6
DCC_CLKSRC7_CLK	Counter 1 Clock Source	GPIO[1]	0x7

11.8.8.2.4 DSS DCC Integration

2-DCC modules have been instantiated in the SOC as part of DSS. Clocks to the module are mentioned in the following sections.

11.8.8.2.4.1 Input Source Clocks

Table 11-1848. DSS_DCCA Clocking

Clock Signal	Description	Source	REG Value for Selection
DCC_INPUT00_CLK	Primary Oscillator Clock	XTALCLK	0x0
DCC_INPUT01_CLK	Primary Oscillator Clock	RCCLK	0x1
DCC_INPUT02_CLK	Primary Oscillator Clock	SYS_CLK	0x1
DCC_CLKSRC0_CLK	Counter 1 Clock Source	DSS_SCIA_CLK	0x0
DCC_CLKSRC1_CLK	Counter 1 Clock Source	DSS_SYS_CLK	0x1
DCC_CLKSRC2_CLK	Counter 1 Clock Source	DSS_HWA_CLK	0x2

Copyright © 2025 Texas Instruments Incorporated

Table 11-1848. DSS_DCCA Clocking (continued)

Clock Signal	Description	Source	REG Value for Selection
DCC_CLKSRC3_CLK	Counter 1 Clock Source	DSS_RTIA_CLK	0x3
DCC_CLKSRC4_CLK	Counter 1 Clock Source	DSS_WDT_CLK	0x4
DCC_CLKSRC5_CLK	Counter 1 Clock Source	DSS_SYS_CLK	0x5
DCC_CLKSRC6_CLK	Counter 1 Clock Source	DSS_DSP_CLK	0x6
DCC_CLKSRC7_CLK	Counter 1 Clock Source	PLL_DSP_HSDIV0_CLKOUT1	0x7

Table 11-1849. DSS_DCCB Clocking

Clock Signal	Description	Source	REG Value for Selection
DCC_INPUT00_CLK	Primary Oscillator Clock	XTALCLK	0x0
DCC_INPUT01_CLK	Primary Oscillator Clock	RCCLK	0x1
DCC_INPUT02_CLK	Primary Oscillator Clock	RSS_CLK	0x2
DCC_CLKSRC2_CLK	Counter 1 Clock Source	DSS_HWA_CLK	0x2
DCC_CLKSRC3_CLK	Counter 1 Clock Source	CSI2_RX_CLK	0x3
DCC_CLKSRC4_CLK	Counter 1 Clock Source	DSS_WDT_CLK	0x4
DCC_CLKSRC5_CLK	Counter 1 Clock Source	RSS_CLK	0x5
DSS_CLKSRC7_CLK	Counter 1 Clock Source	PLL_PER_HSDIV0_CLKOUT1	0x7

Refer to the interrupt and DMA tables for mapping of the IPs interrupts and DMA requests.

11.8.8.2.5 Clock Source Selection for Counter0 and Counter1

Refer the device datasheet to identify the available options for selecting the clock sources for both counters of the DCC module. Some microcontrollers may include multiple instances of the DCC module. This will also be identified in the device datasheet.

The selection of the clock sources for counter0 and coutner1 is done by a combination of the KEY, CNT0 CLKSRC and CNT1 CLKSRC control fields of the CNT0CLKSRC and CNT1CLKSRC registers.

Copyright © 2025 Texas Instruments Incorporated

11.8.8.2.6 DCC Registers

Table 11-1850 lists the DCC memory-mapped registers. All register offset addresses not listed in Table 11-1850 should be considered as reserved locations and the register contents should not be modified.

Table 11-1850. DCC Registers

Offset	Acronym	Register Name	Section
0h	DCCGCTRL	DCCGCTRL	Section 12.8.8.2.6.1
4h	DCCREV	DCCREV	Section 12.8.8.2.6.2
8h	DCCCNTSEED0	DCCCNTSEED0	Section 12.8.8.2.6.3
Ch	DCCVALIDSEED0	DCCVALIDSEED0	Section 12.8.8.2.6.4
10h	DCCCNTSEED1	DCCCNTSEED1	Section 12.8.8.2.6.5
14h	DCCSTAT	DCCSTAT	Section 12.8.8.2.6.6
18h	DCCCNT0	DCCCNT0	Section 12.8.8.2.6.7
1Ch	DCCVALID0	DCCVALID0	Section 12.8.8.2.6.8
20h	DCCCNT1	DCCCNT1	Section 12.8.8.2.6.9
24h	DCCCLKSSRC1	DCCCLKSSRC1	Section 12.8.8.2.6.10
28h	DCCCLKSSRC0	DCCCLKSSRC0	Section 12.8.8.2.6.11

Complex bit access types are encoded to fit into small table cells. Table 11-1851 shows the codes that are used for access types in this section.

Table 11-1851. DCC Access Type Codes

Access Type	Code	Description
Read Type		
R	R	Read
Write Type		
W	W	Write
Reset or Default Value		
-n		Value after reset or the default value
Register Array Variables		
i,j,k,l,m,n		When these variables are used in a register name, an offset, or an address, they refer to the value of a register array where the register is part of a group of repeating registers. The register groups form a hierarchical structure and the array is represented with a formula.
y		When this variable is used in a register name, an offset, or an address it refers to the value of a register array.

Copyright © 2025 Texas Instruments Incorporated

11.8.8.2.6.1 DCCGCTRL Register (Offset = 0h) [reset = 5555h]

DCCGCTRL is shown in Figure 11-642 and described in Table 11-1852.

Return to Summary Table.

Starts / stops the counters clears the error signal

Figure 11-642. DCCGCTRL Register

31	30	29	28	27	26	25	24	23	22	21	20	19	18	17	16
NU															
R-0h															
15	14	13	12	11	10	9	8	7	6	5	4	3	2	1	0
DONENA				SINGLESHOT				ERRENA				DCCENA			
R/W-5h				R/W-5h				R/W-5h				R/W-5h			

Table 11-1852. DCCGCTRL Register Field Descriptions

Bit	Field	Type	Reset	Description
31-16	NU	R	0h	Reserved
15-12	DONENA	R/W	5h	The DONEENA bit enables/disables the done signal. 0101 = disabled & 1010 = enabled
11-8	SINGLESHOT	R/W	5h	Single/Continuous checking mode. 0101 = Continuous & 1010 = Single
7-4	ERRENA	R/W	5h	The ERRENA bit enables/disables the error signal. 0101 = disabled & 1010 = enabled
3-0	DCCENA	R/W	5h	The DCCENA bit starts and stops the operation of the dcc 0101 = disabled & 1010 = enabled

Copyright © 2025 Texas Instruments Incorporated

11.8.8.2.6.2 DCCREV Register (Offset = 4h) [reset = 40000204h]

DCCREV is shown in Figure 11-643 and described in Table 11-1853.

Return to Summary Table.

Module version

Figure 11-643. DCCREV Register

31	30	29	28	27	26	25	24
NU2		SCHEME		NU1		FUNC	
R-0h		R-4h		R-0h		R-0h	
23	22	21	20	19	18	17	16
FUNC							
R-0h							
15	14	13	12	11	10	9	8
FUNC		RTL					MAJOR
R-0h		R-1h					R-0h
7	6	5	4	3	2	1	0
MAJOR		CUSTOM	MINOR				
R-0h		R-0h	R-4h				

Table 11-1853. DCCREV Register Field Descriptions

Bit	Field	Type	Reset	Description
31	NU2	R	0h	Reserved
30-28	SCHEME	R	4h	SCHEME. - (RO)
27-26	NU1	R	0h	Reserved
25-14	FUNC	R	0h	Functional release number - (RO)
13-9	RTL	R	1h	Design Release Number - (RO)
8-6	MAJOR	R	0h	Major Revision Number - (RO)
5	CUSTOM	R	0h	Indicates a special version of the module. May not be supported by standard software - (RO)
4-0	MINOR	R	4h	Minor revision number. - (RO)

Copyright © 2025 Texas Instruments Incorporated

11.8.8.2.6.3 DCCCNTSEED0 Register (Offset = 8h) [reset = 0h]

DCCCNTSEED0 is shown in Figure 11-644 and described in Table 11-1854.

Return to Summary Table.

Seed value for the counter attached to clock source 0

Figure 11-644. DCCCNTSEED0 Register

31	30	29	28	27	26	25	24	23	22	21	20	19	18	17	16	15	14	13	12	11	10	9	8	7	6	5	4	3	2	1	0
NU3												COUNTSEED0																			
R-0h												R/W-0h																			

Table 11-1854. DCCCNTSEED0 Register Field Descriptions

Bit	Field	Type	Reset	Description
31-20	NU3	R	0h	Reserved
19-0	COUNTSEED0	R/W	0h	The seed value for Counter 0. The seed value that gets loaded into counter 0 (clock source 0)

Copyright © 2025 Texas Instruments Incorporated

11.8.8.2.6.4 DCCVALIDSEED0 Register (Offset = Ch) [reset = 0h]

DCCVALIDSEED0 is shown in Figure 11-645 and described in Table 11-1855.

Return to Summary Table.

Seed value for the timeout counter attached to clock source 0

Figure 11-645. DCCVALIDSEED0 Register

31	30	29	28	27	26	25	24	23	22	21	20	19	18	17	16	15	14	13	12	11	10	9	8	7	6	5	4	3	2	1	0
NU4																VALIDSEED0															
R-0h																R/W-0h															

Table 11-1855. DCCVALIDSEED0 Register Field Descriptions

Bit	Field	Type	Reset	Description
31-16	NU4	R	0h	Reserved
15-0	VALIDSEED0	R/W	0h	The seed value for Valid Duration Counter 0.The seed value that gets loaded into the valid duration counter for clock source 0

Copyright © 2025 Texas Instruments Incorporated

11.8.8.2.6.5 DCCCNTSEED1 Register (Offset = 10h) [reset = 0h]

DCCCNTSEED1 is shown in Figure 11-646 and described in Table 11-1856.

Return to Summary Table.

Seed value for the counter attached to clock source 1

Figure 11-646. DCCCNTSEED1 Register

31	30	29	28	27	26	25	24	23	22	21	20	19	18	17	16	15	14	13	12	11	10	9	8	7	6	5	4	3	2	1	0
NU5												COUNTSEED1																			
R-0h												R/W-0h																			

Table 11-1856. DCCCNTSEED1 Register Field Descriptions

Bit	Field	Type	Reset	Description
31-20	NU5	R	0h	Reserved
19-0	COUNTSEED1	R/W	0h	The seed value for Counter 1. The seed value that gets loaded into counter 1 (clock source 1

Copyright © 2025 Texas Instruments Incorporated

11.8.8.2.6.6 DCCSTAT Register (Offset = 14h) [reset = 0h]

DCCSTAT is shown in Figure 11-647 and described in Table 11-1857.

Return to Summary Table.

Contains the error & done flag bit

Figure 11-647. DCCSTAT Register

31	30	29	28	27	26	25	24
NU6							
R-0h							
23	22	21	20	19	18	17	16
NU6							
R-0h							
15	14	13	12	11	10	9	8
NU6							
R-0h							
7	6	5	4	3	2	1	0
NU6						DONE	ERR
R-0h						R/W-0h	R/W-0h

Table 11-1857. DCCSTAT Register Field Descriptions

Bit	Field	Type	Reset	Description
31-2	NU6	R	0h	Reserved
1	DONE	R/W	0h	Indicates whether or not an done has occured. Writing a 1 to this bit clears the flag.
0	ERR	R/W	0h	Indicates whether or not an error has occured. Writing a 1 to this bit clears the flag.

Copyright © 2025 Texas Instruments Incorporated

11.8.8.2.6.7 DCCCNT0 Register (Offset = 18h) [reset = 0h]

DCCCNT0 is shown in Figure 11-648 and described in Table 11-1858.

Return to Summary Table.

Value of the counter attached to clock source 0

Figure 11-648. DCCCNT0 Register

31	30	29	28	27	26	25	24	23	22	21	20	19	18	17	16	15	14	13	12	11	10	9	8	7	6	5	4	3	2	1	0
NU7												COUNT0																			
R-0h												R-0h																			

Table 11-1858. DCCCNT0 Register Field Descriptions

Bit	Field	Type	Reset	Description
31-20	NU7	R	0h	Reserved
19-0	COUNT0	R	0h	This field contains the current value of counter 0. - (RO)

Copyright © 2025 Texas Instruments Incorporated

11.8.8.2.6.8 DCCVALID0 Register (Offset = 1Ch) [reset = 0h]

DCCVALID0 is shown in Figure 11-649 and described in Table 11-1859.

Return to Summary Table.

Value of the valid counter attached to clock source 0

Figure 11-649. DCCVALID0 Register

31	30	29	28	27	26	25	24	23	22	21	20	19	18	17	16	15	14	13	12	11	10	9	8	7	6	5	4	3	2	1	0
NU8																VALID0															
R-0h																R-0h															

Table 11-1859. DCCVALID0 Register Field Descriptions

Bit	Field	Type	Reset	Description
31-16	NU8	R	0h	Reserved
15-0	VALID0	R	0h	This field contains the current value of valid counter 0. - (RO)

Copyright © 2025 Texas Instruments Incorporated

11.8.8.2.6.9 DCCCNT1 Register (Offset = 20h) [reset = 0h]

DCCCNT1 is shown in Figure 11-650 and described in Table 11-1860.

Return to Summary Table.

Value of the counter attached to clock source 1

Figure 11-650. DCCCNT1 Register

31	30	29	28	27	26	25	24	23	22	21	20	19	18	17	16	15	14	13	12	11	10	9	8	7	6	5	4	3	2	1	0
NU9												COUNT1																			
R-0h												R-0h																			

Table 11-1860. DCCCNT1 Register Field Descriptions

Bit	Field	Type	Reset	Description
31-20	NU9	R	0h	Reserved
19-0	COUNT1	R	0h	This field contains the current value of counter 1. - (RO)

Copyright © 2025 Texas Instruments Incorporated

11.8.8.2.6.10 DCCCLKSSRC1 Register (Offset = 24h) [reset = 5000h]

DCCCLKSSRC1 is shown in Figure 11-651 and described in Table 11-1861.

Return to Summary Table.

Clock source1 selection control

Figure 11-651. DCCCLKSSRC1 Register

31	30	29	28	27	26	25	24	23	22	21	20	19	18	17	16
NU11															
R-0h															
15	14	13	12	11	10	9	8	7	6	5	4	3	2	1	0
KEY_B4				NU10								CLK_SRC1			
R/W-5h				R-0h								R/W-0h			

Table 11-1861. DCCCLKSSRC1 Register Field Descriptions

Bit	Field	Type	Reset	Description
31-16	NU11	R	0h	Reserved
15-12	KEY_B4	R/W	5h	Key Programing (1010 is the KEY Value)
11-4	NU10	R	0h	Reserved
3-0	CLK_SRC1	R/W	0h	Clock source selection for Source 0 DCC-A Clock source-0 selection Program value and its respective clock selected 0x0 - REF_CLK 0x1 - CPU_CLK 0x2 - RC_CLK 0x3 - RC_CLK 0x4 - RC_CLK 0x5 - RC_CLK 0x6 - RC_CLK 0x7 - RC_CLK DCC-B Clock source-0 selection Program value and its respective clock selected 0x0 - VCLK 0x1 - DSS_CLK 0x2 - BSS_CLK 0x3 - QSPI_CLK 0x4 - FDCAN_CLK 0x5 - RED_CLK 0x6 - CPU_CLK 0x7 - RC_CLK

Copyright © 2025 Texas Instruments Incorporated

11.8.8.2.6.11 DCCCLKSSRC0 Register (Offset = 28h) [reset = 5h]

DCCCLKSSRC0 is shown in Figure 11-652 and described in Table 11-1862.

Return to Summary Table.

Clock source0 selection control

Figure 11-652. DCCCLKSSRC0 Register

31	30	29	28	27	26	25	24	23	22	21	20	19	18	17	16
NU12															
R-0h															
15	14	13	12	11	10	9	8	7	6	5	4	3	2	1	0
NU12												CLK_SRC0			
R-0h												R/W-5h			

Table 11-1862. DCCCLKSSRC0 Register Field Descriptions

Bit	Field	Type	Reset	Description
31-4	NU12	R	0h	Reserved
3-0	CLK_SRC0	R/W	5h	Clock source selection for Source 0 DCC-A Clock source-0 selection Program value and its respective clock selected 0 - REF_CLK A - PLL_600 5 - PLL_240 DCC-B Clock source-0 selection Program value and its respective clock selected 0 - PLL_600 A - VCLK 5 - CPU_CLK

11.8.8.3 ECC_AGGREGATOR

This section describes the common ECC aggregator functionality.

11.8.8.3.1 ECC Aggregator Overview

To increase functional safety and system reliability the memories (for example, FIFOs, queues, SRAMs and others) in many device modules and subsystems are protected by error correcting code (ECC). This is accomplished through an ECC aggregator and ECC wrapper. The ECC aggregator is connected to these memories (hereinafter ECC RAMs) and involved in the ECC process. Each memory is surrounded by an ECC wrapper which performs the ECC detection and correction. The wrapper communicates via serial interface with the aggregator which has memory mapped configuration interface

11.8.8.3.2 Integration Details

In TPR1x design, there are five ECC aggregators.

- MSS_ECC_AGG_R5A
- MSS_ECC_AGG_R5B
- MSS_ECC_AGG_MSS
- DSS_ECC_AGG
- HSM_ECC_AGGR (details will be available in HSM document)

This aggregator is used to fault inject all memory ecc_controllers and aggregate the errors to generate a single error to ESM.

11.8.8.3.3 ECC Aggregator Features

The ECC aggregator has the following features:

- Reduces memory software errors via single error correction (SEC) and double error detection (DED)
- Provides a mechanism to control and monitor the ECC protected memories in a module or subsystem
- SEC and DED over the system interconnect data bus and parity and redundancy for the system interconnect command and address buses
- Generates an interrupt for correctable error

Copyright © 2025 Texas Instruments Incorporated

- Generates an interrupt for non-correctable error
- Supports inject only mode for diagnostic purposes
- Supports software readable status for single and double-bit ECC errors and associated information such as row address where error has occurred and data bits that have been flipped
- An ECC endpoint can be ECC RAM component.
- Detects single bit error via parity checking on:
  1. Memory mapped configuration interface FIFO
  2. Serial interface FIFO
- Single bit error detection via parity checking results in a non-correctable error interrupt
- Supports timeout mechanism on transactions over the ECC serial interface. Timeout occurrence results in a non-correctable error interrupt.
- Certain control bits have redundancy and if a bit flips an interrupt is generated

11.8.8.3.4 ECC Aggregator Integration

This section describes ECC aggregator integration in the device, including information about clocks, resets, and hardware requests.

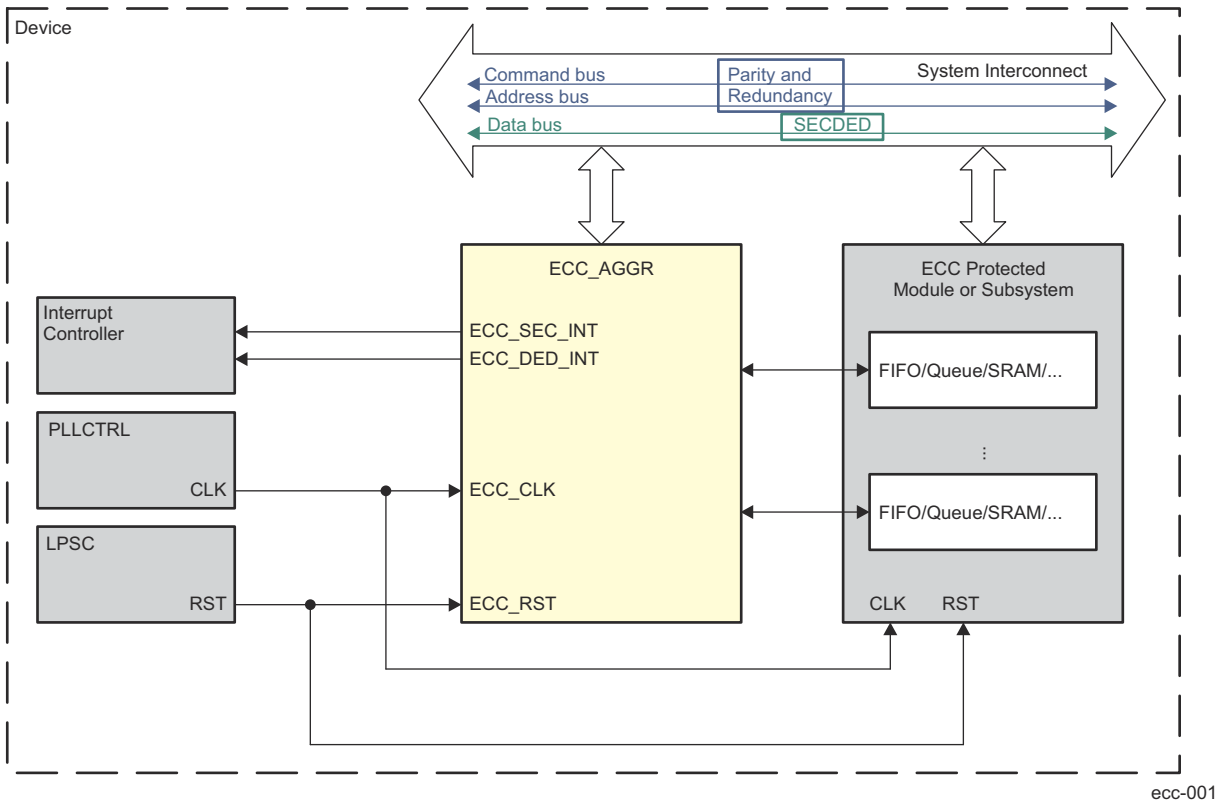

Figure 11-653. ECC Aggregator Integration

Table 11-1863. ECC Aggregator Clocks and Resets

Clock				
Module Instance	Module Clock Input	Source Clock Signal	Source	Description
ECC_AGGR	ECC_CLK	Same as corresponding module or subsystem	Same as corresponding module or subsystem	ECC aggregator clock
Resets				
Module Instance	Module Reset Input	Source Reset Signal	Source	Description
ECC_AGGR	ECC_RST	Same as corresponding module or subsystem	Same as corresponding module or subsystem	ECC aggregator reset

Copyright © 2025 Texas Instruments Incorporated

Table 11-1864. ECC Aggregator Hardware Requests

Interrupt Requests					
Module Instance	Module Interrupt Signal	Destination Interrupt Input	Description	Description	Type
ECC_AGGR	ECC_SEC_INT	See	See	Interrupt for correctable error(SEC)	Leve
	ECC_DED_INT	See	See	Interrupt for non-correctable error (DED, parity, redundancy, timeout)	LEVEL
DMA Events					
Module Instance	Module DMA Input	Destination DMA Event Input	Destination	Description	Type
ECC_AGGR	-	-	-	-	-

Note

For more information on the interrupts, see Section 11.8.4.9.

For more information on the interconnects, see .

For more information on the power, reset and clock management, see the corresponding sections in .

For more information on the device interrupt controllers, see *Interrupt Controllers*.

11.8.8.3.5 ECC Aggregator Function Description

This section describes the architecture and functional details of the ECC aggregator.

11.8.8.3.5.1 ECC Aggregator Block Diagram

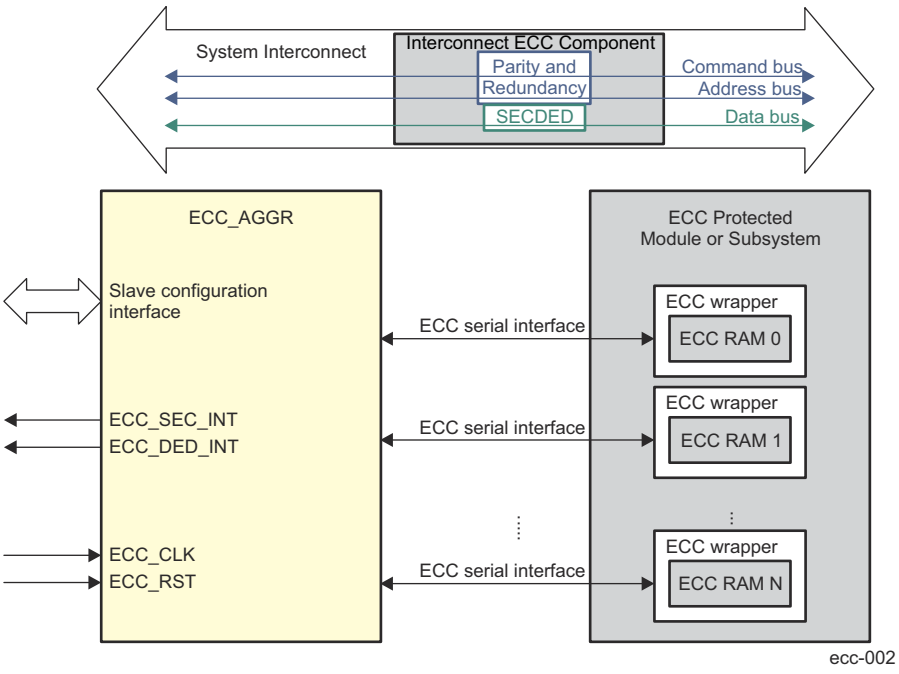

Figure 11-654. ECC Aggregator Block Diagram

The ECC aggregator is connected to one or more ECC endpoints each of which has assigned a unique ID used when the endpoint is accessed for status information or configuration. The ECC aggregator provides software

Copyright © 2025 Texas Instruments Incorporated

access to all ECC related registers through its memory mapped slave configuration interface while the serial interface is used to communicate with the ECC endpoints. Upon detection of single or double-bit error the corresponding interrupt line is asserted.

11.8.8.3.6 ECC Aggregator Register Groups

The ECC aggregator has ECC control, status and interrupt registers for each ECC endpoint in a module or subsystem. These registers are memory mapped and occupy 1 KB address space although part of it may contain reserved locations. The registers are split in the following types:

- **Global registers**. They are common to all ECC endpoints associated with the ECC aggregator and include the ECC_VECTOR and ECC_REV registers. Each ECC endpoint has assigned a unique ID.

  When this ID is written to the ECC_VECTOR[10-0] ECC_VECTOR field the corresponding endpoint is selected either for control or for status reading.
- **ECC control and status registers**. These registers are specific to each ECC endpoint and reside in the range from address offset 0x10 to 0x28, if the endpoint is ECC RAM or from 0x10 to 0x24, if the endpoint is interconnect ECC component. They are memory mapped but are accessed through the ECC serial interface. They are also selected by the ECC endpoint ID written to the ECC_VECTOR[10-0] ECC_VECTOR field. Because of latency on the serial interface the ECC control and status registers are read by performing special sequence as described in Section 12.9.4.3.3. These registers have also different functionality for both types of endpoints - ECC RAM and interconnect ECC component.
- **Interrupt registers**. They include interrupt status, interrupt enable, interrupt disable, and EOI registers.

11.8.8.3.7 Read Access to the ECC Control and Status Registers

Read accesses to the ECC control and status registers for each ECC endpoint represent read operations over the ECC serial interface and are triggered by performing the following sequence:

1. Software writes the following in the ECC_VECTOR register:
   - The ECC endpoint ID in the ECC_VECTOR[10-0] ECC_VECTOR field to select particular ECC endpoint.
   - The register read address in the ECC_VECTOR[23-16] RD_SVBUS_ADDRESS field to select which register has to be read through the ECC serial interface.
   - A value of 0x1 in the ECC_VECTOR[15] RD_SVBUS bit to trigger read operation through the ECC serial interface.
2. Software polls the ECC_VECTOR[24] RD_SVBUS_DONE bit to check if it is 0x1. This indicates that the read operation on the ECC serial interface has completed.
3. Software reads the data from the register previously selected by the ECC_VECTOR[23-16]RD_SVBUS_ADDRESS field.

11.8.8.3.8 Serial Write Operation

Write operations over the ECC serial interface are performed as follows:

1. Software specifies the ECC endpoint ID in the ECC_VECTOR[10-0] ECC_VECTOR field. The ECC_VECTOR[23-16] RD_SVBUS_ADDRESS field is a don't care but the ECC_VECTOR[15] RD_SVBUS bit must be set to 0x0.
2. Software performs regular write operation to the desired address. If the ECC endpoint ID has already been specified, step 1 can be skipped. Unlike serial read operations it is not necessary to always specify the endpoint ID before performing serial write operation.

The following is an example for serial write operation:

1. Write 0x0000 0008 to the ECC_VECTOR register.
2. Write 0x0000 000F to the ECC_CTRL register. This sends write request with data 0x0000 000F to the ECC_CTRL register associated with ECC RAM with ID = 8.

11.8.8.3.9 Interrupts

The ECC aggregator generates the following interrupts:

Copyright © 2025 Texas Instruments Incorporated

- Correctable interrupt (ECC_SEC_INT) where hardware can correct the error but notifies the system in case of SEC.
- Non-correctable interrupt (ECC_DED_INT) where hardware cannot correct the error in cases of DED, parity check, redundancy check or timeout occurrence.

The following is the sequence for servicing interrupts:

- Software enables the interrupts for an ECC endpoint by writing 0x1 to the corresponding bit of the following interrupt enable registers:
  - ECC_SEC_ENABLE_SET_REG0 for the correctable interrupt
  - ECC_DED_ENABLE_SET_REG0 for the noncorrectable interrupt
- On receiving an interrupt, software checks which ECC endpoint has caused the error by reading the following interrupt status registers:
  - ECC_SEC_STATUS_REG0 for the correctable interrupt ECC_DED_STATUS_REG0 for the non-correctable interrupt
- Software performs serial read operations as described in Section 12.9.4.3.3 to read the following status registers that contain details about the error:
  - If the endpoint is ECC RAM:
    - ECC_ERR_STAT1
    - ECC_ERR_STAT2
    - ECC_ERR_STAT3
- If the endpoint is interconnect ECC component:
  - ECC_CBASS_ERR_STAT1
  - ECC_CBASS_ERR_STAT2
- After the interrupt has been serviced, depending on the error type, software should clear the corresponding status bits in the ECC_ERR_STAT1 and ECC_ERR_STAT3 registers or in the ECC_CBASS_ERR_STAT1 register. Software has to poll these registers to guarantee that status bits are cleared as there is no other indication for write completion over the ECC serial interface.

The value of the *_PEND_CLR fields in the ECC_CBASS_ERR_STAT1 register must be read and then written back to decrement the count of each field back to 0x0. A further error capture into the ECC_CBASS_ERR_STAT1 register does not occur unless all its fields are 0x0. The decrement value should not be larger than the read value. If a field in the ECC_CBASS_ERR_STAT1 register should not be modified, write a value of 0x0 to that field.

- Software writes 0x1 to the corresponding end of interrupt register to clear the interrupt:
  - ECC_SEC_EOI_REG for the correctable interrupt
  - ECC_DED_EOI_REG for the non-correctable interrupt

11.8.8.3.10 Inject Only Mode

There are modules that already perform the ECC generation and checking as part of their data path. In this case, the ECC wrapper may be configured in inject only mode, if needed. In this mode the ECC wrapper does not perform ECC detection and correction. The inject only mode allows users to inject single or double-bit errors so that the module logic can be tested for diagnostic purposes.

Note

There is no software control to enable inject only mode. It is configured via tie-off value. Inject only and ECC modes are mutually exclusive.

The interconnect ECC component also supports error injection mode. There is error injection logic for testing of the error checking logic (checkers). The injection logic can be configured to inject either single or double bit error and what data pattern to be used for injection (ECC_CBASS_CTRL[11-8] ECC_PATTERN). The ECC_CBASS_ERR_CTRL1 and ECC_CBASS_ERR_CTRL2 registers should be written first to setup the injection. Then, either the ECC_CBASS_CTRL[3] FORCE_SE or the ECC_CBASS_CTRL[4] FORCE_DE bit must be set to 0x1 to start the injection. Both bits must not be set at the same time. If the injection should

Copyright © 2025 Texas Instruments Incorporated

continue in incrementing mode, then the ECC_CBASS_CTRL[5] FORCE_N_BIT bit should be set to 0x1. Once the FORCE_N_BIT is set, then each successive injection can simply write the ECC_CBASS_CTRL register to set the FORCE_SE or FORCE_DE again. Reading 0x0 from either the FORCE_SE or the FORCE_DE bit indicates that the injection has completed, as these bits automatically clear when the checker indicates that it has performed the injection. The time for an injection to complete is not guaranteed, so some delay is needed between successive injections.

11.8.8.3.11 Errors

Each aggregator generates two errors which drive the ESM.

- <modulename>_SERR module names are mentioned in the below section
- <modulename>_SERR module names are mentioned in the below section

Group1 and Group2 mappings are found the ESM interrupt sections.

11.8.8.3.12 Aggregator Mapping to Memory Instances

Table 11-1865. MSS_ECC_AGG_R5A Instance

RAM ID	Module Name	Protected RAM
RAM_0	MSS_CR5A_CACHE	MSS_CR5A_ITAG_BANK0
RAM_1		MSS_CR5A_ITAG_BANK1
RAM_2		MSS_CR5A_ITAG_BANK2
RAM_3		MSS_CR5A_ITAG_BANK3
RAM_4		MSS_CR5A_IDATA_BANK0
RAM_5		MSS_CR5A_IDATA_BANK1
RAM_6		MSS_CR5A_IDATA_BANK2
RAM_7		MSS_CR5A_IDATA_BANK3
RAM_8		MSS_CR5A_DTAG_BANK0
RAM_9		MSS_CR5A_DTAG_BANK1
RAM_10		MSS_CR5A_DTAG_BANK2
RAM_11		MSS_CR5A_DTAG_BANK3
RAM_12		MSS_CR5A_DDIRTY
RAM_13		MSS_CR5A_DDATA_BANK0
RAM_14		MSS_CR5A_DDATA_BANK1
RAM_15		MSS_CR5A_DDATA_BANK2
RAM_16		MSS_CR5A_DDATA_BANK3
RAM_17		MSS_CR5A_DDATA_BANK4
RAM_18		MSS_CR5A_DDATA_BANK5
RAM_19		MSS_CR5A_DDATA_BANK6
RAM_20		MSS_CR5A_DDATA_BANK7
RAM_21	MSS_CR5A_TCM	MSS_CR5A_ATCM_BANK0
RAM_22		MSS_CR5A_ATCM_BANK1
RAM_23		MSS_CR5A_B0TCM_BANK0
RAM_24		MSS_CR5A_B0TCM_BANK1
RAM_25		MSS_CR5A_B1TCM_BANK0
RAM_26		MSS_CR5A_B1TCM_BANK1
RAM_27	MSS_CR5A_VIM	MSS_CR5A_VIM

Table 11-1866. MSS_ECC_AGG_R5B Intance

RAM ID	Module Name	Protected RAM

Copyright © 2025 Texas Instruments Incorporated

Table 11-1866. MSS_ECC_AGG_R5B Intance (continued)

RAM_0	MSS_CR5B_CACHE	MSS_CR5B_ITAG_BANK0
RAM_1		MSS_CR5B_ITAG_BANK1
RAM_2		MSS_CR5B_ITAG_BANK2
RAM_3		MSS_CR5B_ITAG_BANK3
RAM_4		MSS_CR5B_IDATA_BANK0
RAM_5		MSS_CR5B_IDATA_BANK1
RAM_6		MSS_CR5B_IDATA_BANK2
RAM_7		MSS_CR5B_IDATA_BANK3
RAM_8		MSS_CR5B_DTAG_BANK0
RAM_9		MSS_CR5B_DTAG_BANK1
RAM_10		MSS_CR5B_DTAG_BANK2
RAM_11		MSS_CR5B_DTAG_BANK3
RAM_12		MSS_CR5B_DDIRTY
RAM_13		MSS_CR5B_IDATA_BANK0
RAM_14		MSS_CR5B_IDATA_BANK1
RAM_15		MSS_CR5B_IDATA_BANK2
RAM_16		MSS_CR5B_IDATA_BANK3
RAM_17		MSS_CR5B_IDATA_BANK4
RAM_18		MSS_CR5B_IDATA_BANK5
RAM_19		MSS_CR5B_IDATA_BANK6
RAM_20		MSS_CR5B_IDATA_BANK7
RAM_21	MSS_CR5B_TCM	MSS_CR5B_ATCM_BANK0
RAM_22		MSS_CR5B_ATCM_BANK1
RAM_23		MSS_CR5B_B0TCM_BANK0
RAM_24		MSS_CR5B_B0TCM_BANK1
RAM_25		MSS_CR5B_B1TCM_BANK0
RAM_26		MSS_CR5B_B1TCM_BANK1
RAM_27	MSS_CR5B_VIM	MSS_CR5B_VIM

Table 11-1867. MSS_ECC_AGG_MSS Instance

RAM ID	Module Name	Protected RAM
RAM_0	MSS_L2	MSS_L2RAM A
RAM_1		MSS_L2RAM B
RAM_2	MSS_MBOX	MSS_MBOX
RAM_3	MSS_RETRAM	MSS_RETRAM
RAM_4	MSS_GPADC	MSS_GPADC_DATA_RAM
RAM_5	MSS_TPTC_A0	MSS_TPTC_A0
RAM_6	MSS_TPTC_A1	MSS_TPTC_A1
RAM_7	MSS_TPTC_B0	MSS_TPTC_B0

Table 11-1868. DSS_ECC_AGG Instance

RAM ID	Module Name	Protected RAM
RAM_0	DSS_L3	DSS_L3RAM A
RAM_1		DSS_L3RAM B
RAM_2		DSS_L3RAM C
RAM_3		DSS_L3RAM D
RAM_4	DSS_MAILBOX	DSS MAILBOX

Copyright © 2025 Texas Instruments Incorporated

Table 11-1868. DSS_ECC_AGG Instance (continued)

RAM_5	DSS_CM4_RAM	DSS CM4 RAM B0
RAM_6		DSS CM4 RAM B1
RAM_7		DSS CM4 RAM B2
RAM_8	DSS_CM4_MBOX	DSS CM4 MAILBOX
RAM_9	DSS_TPTC_A0	DSS TPTC A0 FIFO
RAM_10	DSS_TPTC_A1	DSS TPTC A1 FIFO
RAM_11	DSS_TPTC_B0	DSS TPTC B0 FIFO
RAM_12	DSS_TPTC_B1	DSS TPTC B1 FIFO
RAM_13	DSS_TPTC_C0	DSS TPTC C0 FIFO
RAM_14	DSS_TPTC_C1	DSS TPTC C1 FIFO
RAM_15	DSS_TPTC_C2	DSS TPTC C2 FIFO
RAM_16	DSS_TPTC_C3	DSS TPTC C3 FIFO
RAM_17	DSS_TPTC_C4	DSS TPTC C4 FIFO
RAM_18	DSS_TPTC_C5	DSS TPTC C5 FIFO
RAM_19	RCSS_TPTC_A0	RCSS TPTC A0 FIFO
RAM_20	RCSS_TPTC_A1	RCSS TPTC A1 FIFO
RAM_21	RESERVED	RESERVED
RAM_22	DSS_HWA	DSS HWA PARAM RAM

11.8.8.4 ECC Registers

Copyright © 2025 Texas Instruments Incorporated

11.8.8.4.1 DSS_ECC_AGG Registers

Table 11-1869 lists the memory-mapped registers for the DSS_ECC_AGG registers. All register offset addresses not listed in Table 11-1869 should be considered as reserved locations and the register contents should not be modified.

Table 11-1869. DSS_ECC_AGG Registers

Offset	Acronym	Register Name	Section
0h	rev	Aggregator Revision Register	Go
8h	vector	ECC Vector Register	Go
Ch	stat	Misc Status	Go
10h	wrap_rev	ECC Wrapper Revision Register	Go
14h	ctrl	ECC Control	Go
18h	err_ctrl1	ECC Error Control1 Register	Go
1Ch	err_ctrl2	ECC Error Control2 Register	Go
20h	err_stat1	ECC Error Status1 Register	Go
24h	err_stat2	ECC Error Status2 Register	Go
28h	err_stat3	ECC Error Status3 Register	Go
3Ch	sec_eoi_reg	EOI Register	Go
40h	sec_status_reg0	Interrupt Status Register 0	Go
80h	sec_enable_set_reg0	Interrupt Enable Set Register 0	Go
C0h	sec_enable_clr_reg0	Interrupt Enable Clear Register 0	Go
13Ch	ded_eoi_reg	EOI Register	Go
140h	ded_status_reg0	Interrupt Status Register 0	Go
180h	ded_enable_set_reg0	Interrupt Enable Set Register 0	Go
1C0h	ded_enable_clr_reg0	Interrupt Enable Clear Register 0	Go
200h	aggr_enable_set	AGGR interrupt enable set Register	Go
204h	aggr_enable_clr	AGGR interrupt enable clear Register	Go
208h	aggr_status_set	AGGR interrupt status set Register	Go
20Ch	aggr_status_clr	AGGR interrupt status clear Register	Go

Complex bit access types are encoded to fit into small table cells. Table 11-1870 shows the codes that are used for access types in this section.

Table 11-1870. DSS_ECC_AGG Access Type Codes

Access Type	Code	Description
Read Type		
R	R	Read
Write Type		
W	W	Write
W1C	W 1C	Write 1 to clear
W1S	W 1S	Write 1 to set
Wdecr	W decr	Write
Wincr	W incr	Write
Reset or Default Value		

Copyright © 2025 Texas Instruments Incorporated

Table 11-1870. DSS_ECC_AGG Access Type Codes (continued)

Access Type	Code	Description
-n		Value after reset or the default value

Copyright © 2025 Texas Instruments Incorporated

11.8.8.4.1.1 rev Register (Offset = 0h) [Reset = 66A0C200h]

rev is shown in Table 11-1871.

Return to the Summary Table.

Revision parameters

Table 11-1871. rev Register Field Descriptions

Bit	Field	Type	Reset	Description
31-30	scheme	R	1h	Scheme
29-28	bu	R	2h	bu
27-16	module_id	R	6A0h	Module ID
15-11	revrtl	R	18h	RTL version
10-8	revmaj	R	2h	Major version
7-6	custom	R	0h	Custom version
5-0	revmin	R	0h	Minor version

Copyright © 2025 Texas Instruments Incorporated

11.8.8.4.1.2 vector Register (Offset = 8h) [Reset = X]

vector is shown in Table 11-1872.

Return to the Summary Table.

ECC Vector Register

Table 11-1872. vector Register Field Descriptions

Bit	Field	Type	Reset	Description
31-25	RESERVED	R/W	X	
24	rd_svbus_done	R	0h	Status to indicate if read on serial VBUS is complete
23-16	rd_svbus_address	R/W	0h	Read address
15	rd_svbus	R/W1S	0h	Write 1 to trigger a read on the serial VBUS
14-11	RESERVED	R/W	X	
10-0	ecc_vector	R/W	0h	Value written to select the corresponding ECC RAM for control or status

Copyright © 2025 Texas Instruments Incorporated

11.8.8.4.1.3 stat Register (Offset = Ch) [Reset = X]

stat is shown in Table 11-1873.

Return to the Summary Table.

Misc Status

Table 11-1873. stat Register Field Descriptions

Bit	Field	Type	Reset	Description
31-11	RESERVED	R	X	
10-0	num_rams	R	17h	Indicates the number of RAMS serviced by the ECC aggregator

Copyright © 2025 Texas Instruments Incorporated

11.8.8.4.1.4 wrap_rev Register (Offset = 10h) [Reset = 66A40202h]

wrap_rev is shown in Table 11-1874.

Return to the Summary Table.

Revision parameters

Table 11-1874. wrap_rev Register Field Descriptions

Bit	Field	Type	Reset	Description
31-30	scheme	R	1h	Scheme
29-28	bu	R	2h	bu
27-16	module_id	R	6A4h	Module ID
15-11	revrtl	R	0h	RTL version
10-8	revmaj	R	2h	Major version
7-6	custom	R	0h	Custom version
5-0	revmin	R	2h	Minor version

Copyright © 2025 Texas Instruments Incorporated

11.8.8.4.1.5 ctrl Register (Offset = 14h) [Reset = X]

ctrl is shown in Table 11-1875.

Return to the Summary Table.

ECC Control Register

Table 11-1875. ctrl Register Field Descriptions

Bit	Field	Type	Reset	Description
31-9	RESERVED	R/W	X	
8	check_svbus_timeout	R/W	1h	check for svbus timeout errors
7	check_parity	R/W	1h	check for parity errors
6	error_once	R/W	0h	Force Error only once
5	force_n_row	R/W	0h	Force Error on any RAM read
4	force_ded	R/W	0h	Force Double Bit Error
3	force_sec	R/W	0h	Force Single Bit Error
2	enable_rmw	R/W	1h	Enable rmw
1	ecc_check	R/W	1h	Enable ECC check
0	ecc_enable	R/W	1h	Enable ECC

Copyright © 2025 Texas Instruments Incorporated

11.8.8.4.1.6 err_ctrl1 Register (Offset = 18h) [Reset = 00000000h]

err_ctrl1 is shown in Table 11-1876.

Return to the Summary Table.

ECC Error Control1 Register

Table 11-1876. err_ctrl1 Register Field Descriptions

Bit	Field	Type	Reset	Description
31-0	ecc_row	R/W	0h	Row address where single or double-bit error needs to be applied. This is ignored if force_n_row is set

Copyright © 2025 Texas Instruments Incorporated

11.8.8.4.1.7 err_ctrl2 Register (Offset = 1Ch) [Reset = 00000000h]

err_ctrl2 is shown in Table 11-1877.

Return to the Summary Table.

ECC Error Control2 Register

Table 11-1877. err_ctrl2 Register Field Descriptions

Bit	Field	Type	Reset	Description
31-16	ecc_bit2	R/W	0h	Data bit that needs to be flipped if double bit error needs to be forced
15-0	ecc_bit1	R/W	0h	Data bit that needs to be flipped when force_sec is set

Copyright © 2025 Texas Instruments Incorporated

11.8.8.4.1.8 err_stat1 Register (Offset = 20h) [Reset = 00000000h]

err_stat1 is shown in Table 11-1878.

Return to the Summary Table.

ECC Error Status1 Register

Table 11-1878. err_stat1 Register Field Descriptions

Bit	Field	Type	Reset	Description
31-16	ecc_bit1	R	0h	Data bit that corresponds to the single-bit error
15	clr_ctrl_reg_err	R/W1C	0h	Clear control reg error Error Status, you must also re write the contorl ergister itself to clear this
14-13	clr_parity_err	R/Wdecr	0h	Clear parity Error Status
12	clr_ecc_other	R/W1C	0h	Clear other Error Status
11-10	clr_ecc_ded	R/Wdecr	0h	Clear Double Bit Error Status
9-8	clr_ecc_sec	R/Wdecr	0h	Clear Single Bit Error Status
7	ctr_reg_err	R/W1S	0h	control register error pending, Level interrupt
6-5	parity_err	R/W1S	0h	Level parity error Error Status
4	ecc_other	R/W1S	0h	successive single-bit errors have occurred while a writeback is still pending, Level interrupt
3-2	ecc_ded	R/Wincr	0h	Level Double Bit Error Status
1-0	ecc_sec	R/Wincr	0h	Level Single Bit Error Status

Copyright © 2025 Texas Instruments Incorporated

11.8.8.4.1.9 err_stat2 Register (Offset = 24h) [Reset = 00000000h]

err_stat2 is shown in Table 11-1879.

Return to the Summary Table.

ECC Error Status2 Register

Table 11-1879. err_stat2 Register Field Descriptions

Bit	Field	Type	Reset	Description
31-0	ecc_row	R	0h	Row address where the single or double-bit error has occurred

Copyright © 2025 Texas Instruments Incorporated

11.8.8.4.1.10 err_stat3 Register (Offset = 28h) [Reset = X]

err_stat3 is shown in Table 11-1880.

Return to the Summary Table.

ECC Error Status3 Register

Table 11-1880. err_stat3 Register Field Descriptions

Bit	Field	Type	Reset	Description
31-10	RESERVED	R/W	X	
9	clr_svbus_timeout_err	R/W1C	0h	Clear svbus timeout Error Status
8-2	RESERVED	R/W	X	
1	svbus_timeout_err	R/W1S	0h	Level svbus timeout error Error Status
0	wb_pend	R	0h	delayed write back pending Status

Copyright © 2025 Texas Instruments Incorporated

11.8.8.4.1.11 sec_eoi_reg Register (Offset = 3Ch) [Reset = X]

sec_eoi_reg is shown in Table 11-1881.

Return to the Summary Table.

EOI Register

Table 11-1881. sec_eoi_reg Register Field Descriptions

Bit	Field	Type	Reset	Description
31-1	RESERVED	R/W	X	
0	eoi_wr	R/W1S	0h	EOI Register

Copyright © 2025 Texas Instruments Incorporated

11.8.8.4.1.12 sec_status_reg0 Register (Offset = 40h) [Reset = X]

sec_status_reg0 is shown in Table 11-1882.

Return to the Summary Table.

Interrupt Status Register 0

Table 11-1882. sec_status_reg0 Register Field Descriptions

Bit	Field	Type	Reset	Description
31-23	RESERVED	R/W	X	
22	rcss_tptc_b1_pend	R/W1S	0h	Interrupt Pending Status for rcss_tptc_b1_pend
21	rcss_tptc_b0_pend	R/W1S	0h	Interrupt Pending Status for rcss_tptc_b0_pend
20	rcss_tptc_a1_pend	R/W1S	0h	Interrupt Pending Status for rcss_tptc_a1_pend
19	rcss_tptc_a0_pend	R/W1S	0h	Interrupt Pending Status for rcss_tptc_a0_pend
18	dss_tptc_c5_pend	R/W1S	0h	Interrupt Pending Status for dss_tptc_c5_pend
17	dss_tptc_c4_pend	R/W1S	0h	Interrupt Pending Status for dss_tptc_c4_pend
16	dss_tptc_c3_pend	R/W1S	0h	Interrupt Pending Status for dss_tptc_c3_pend
15	dss_tptc_c2_pend	R/W1S	0h	Interrupt Pending Status for dss_tptc_c2_pend
14	dss_tptc_c1_pend	R/W1S	0h	Interrupt Pending Status for dss_tptc_c1_pend
13	dss_tptc_c0_pend	R/W1S	0h	Interrupt Pending Status for dss_tptc_c0_pend
12	dss_tptc_b1_pend	R/W1S	0h	Interrupt Pending Status for dss_tptc_b1_pend
11	dss_tptc_b0_pend	R/W1S	0h	Interrupt Pending Status for dss_tptc_b0_pend
10	dss_tptc_a1_pend	R/W1S	0h	Interrupt Pending Status for dss_tptc_a1_pend
9	dss_tptc_a0_pend	R/W1S	0h	Interrupt Pending Status for dss_tptc_a0_pend
8-5	RESERVED	R/W	0h	
4	dss_mailbox_pend	R/W1S	0h	Interrupt Pending Status for dss_mailbox_pend
3	dss_l3ram3_pend	R/W1S	0h	Interrupt Pending Status for dss_l3ram3_pend
2	dss_l3ram2_pend	R/W1S	0h	Interrupt Pending Status for dss_l3ram2_pend
1	dss_l3ram1_pend	R/W1S	0h	Interrupt Pending Status for dss_l3ram1_pend
0	dss_l3ram0_pend	R/W1S	0h	Interrupt Pending Status for dss_l3ram0_pend

Copyright © 2025 Texas Instruments Incorporated

11.8.8.4.1.13 sec_enable_set_reg0 Register (Offset = 80h) [Reset = X]

sec_enable_set_reg0 is shown in Table 11-1883.

Return to the Summary Table.

Interrupt Enable Set Register 0

Table 11-1883. sec_enable_set_reg0 Register Field Descriptions

Bit	Field	Type	Reset	Description
31-23	RESERVED	R/W	X	
22	rcss_tptc_b1_enable_set	R/W1S	0h	Interrupt Enable Set Register for rcss_tptc_b1_pend
21	rcss_tptc_b0_enable_set	R/W1S	0h	Interrupt Enable Set Register for rcss_tptc_b0_pend
20	rcss_tptc_a1_enable_set	R/W1S	0h	Interrupt Enable Set Register for rcss_tptc_a1_pend
19	rcss_tptc_a0_enable_set	R/W1S	0h	Interrupt Enable Set Register for rcss_tptc_a0_pend
18	dss_tptc_c5_enable_set	R/W1S	0h	Interrupt Enable Set Register for dss_tptc_c5_pend
17	dss_tptc_c4_enable_set	R/W1S	0h	Interrupt Enable Set Register for dss_tptc_c4_pend
16	dss_tptc_c3_enable_set	R/W1S	0h	Interrupt Enable Set Register for dss_tptc_c3_pend
15	dss_tptc_c2_enable_set	R/W1S	0h	Interrupt Enable Set Register for dss_tptc_c2_pend
14	dss_tptc_c1_enable_set	R/W1S	0h	Interrupt Enable Set Register for dss_tptc_c1_pend
13	dss_tptc_c0_enable_set	R/W1S	0h	Interrupt Enable Set Register for dss_tptc_c0_pend
12	dss_tptc_b1_enable_set	R/W1S	0h	Interrupt Enable Set Register for dss_tptc_b1_pend
11	dss_tptc_b0_enable_set	R/W1S	0h	Interrupt Enable Set Register for dss_tptc_b0_pend
10	dss_tptc_a1_enable_set	R/W1S	0h	Interrupt Enable Set Register for dss_tptc_a1_pend
9	dss_tptc_a0_enable_set	R/W1S	0h	Interrupt Enable Set Register for dss_tptc_a0_pend
8-5	RESERVED	R/W	0h	
4	dss_mailbox_enable_set	R/W1S	0h	Interrupt Enable Set Register for dss_mailbox_pend
3	dss_l3ram3_enable_set	R/W1S	0h	Interrupt Enable Set Register for dss_l3ram3_pend
2	dss_l3ram2_enable_set	R/W1S	0h	Interrupt Enable Set Register for dss_l3ram2_pend
1	dss_l3ram1_enable_set	R/W1S	0h	Interrupt Enable Set Register for dss_l3ram1_pend
0	dss_l3ram0_enable_set	R/W1S	0h	Interrupt Enable Set Register for dss_l3ram0_pend

Copyright © 2025 Texas Instruments Incorporated

11.8.8.4.1.14 sec_enable_clr_reg0 Register (Offset = C0h) [Reset = X]

sec_enable_clr_reg0 is shown in Table 11-1884.

Return to the Summary Table.

Interrupt Enable Clear Register 0

Table 11-1884. sec_enable_clr_reg0 Register Field Descriptions

Bit	Field	Type	Reset	Description
31-23	RESERVED	R/W	X	
22	rcss_tptc_b1_enable_clr	R/W1C	0h	Interrupt Enable Clear Register for rcss_tptc_b1_pend
21	rcss_tptc_b0_enable_clr	R/W1C	0h	Interrupt Enable Clear Register for rcss_tptc_b0_pend
20	rcss_tptc_a1_enable_clr	R/W1C	0h	Interrupt Enable Clear Register for rcss_tptc_a1_pend
19	rcss_tptc_a0_enable_clr	R/W1C	0h	Interrupt Enable Clear Register for rcss_tptc_a0_pend
18	dss_tptc_c5_enable_clr	R/W1C	0h	Interrupt Enable Clear Register for dss_tptc_c5_pend
17	dss_tptc_c4_enable_clr	R/W1C	0h	Interrupt Enable Clear Register for dss_tptc_c4_pend
16	dss_tptc_c3_enable_clr	R/W1C	0h	Interrupt Enable Clear Register for dss_tptc_c3_pend
15	dss_tptc_c2_enable_clr	R/W1C	0h	Interrupt Enable Clear Register for dss_tptc_c2_pend
14	dss_tptc_c1_enable_clr	R/W1C	0h	Interrupt Enable Clear Register for dss_tptc_c1_pend
13	dss_tptc_c0_enable_clr	R/W1C	0h	Interrupt Enable Clear Register for dss_tptc_c0_pend
12	dss_tptc_b1_enable_clr	R/W1C	0h	Interrupt Enable Clear Register for dss_tptc_b1_pend
11	dss_tptc_b0_enable_clr	R/W1C	0h	Interrupt Enable Clear Register for dss_tptc_b0_pend
10	dss_tptc_a1_enable_clr	R/W1C	0h	Interrupt Enable Clear Register for dss_tptc_a1_pend
9	dss_tptc_a0_enable_clr	R/W1C	0h	Interrupt Enable Clear Register for dss_tptc_a0_pend
8-5	RESERVED	R/W	0h	
4	dss_mailbox_enable_clr	R/W1C	0h	Interrupt Enable Clear Register for dss_mailbox_pend
3	dss_l3ram3_enable_clr	R/W1C	0h	Interrupt Enable Clear Register for dss_l3ram3_pend
2	dss_l3ram2_enable_clr	R/W1C	0h	Interrupt Enable Clear Register for dss_l3ram2_pend
1	dss_l3ram1_enable_clr	R/W1C	0h	Interrupt Enable Clear Register for dss_l3ram1_pend
0	dss_l3ram0_enable_clr	R/W1C	0h	Interrupt Enable Clear Register for dss_l3ram0_pend

Copyright © 2025 Texas Instruments Incorporated

11.8.8.4.1.15 ded_eoi_reg Register (Offset = 13Ch) [Reset = X]

ded_eoi_reg is shown in Table 11-1885.

Return to the Summary Table.

EOI Register

Table 11-1885. ded_eoi_reg Register Field Descriptions

Bit	Field	Type	Reset	Description
31-1	RESERVED	R/W	X	
0	eoi_wr	R/W1S	0h	EOI Register

Copyright © 2025 Texas Instruments Incorporated

11.8.8.4.1.16 ded_status_reg0 Register (Offset = 140h) [Reset = X]

ded_status_reg0 is shown in Table 11-1886.

Return to the Summary Table.

Interrupt Status Register 0

Table 11-1886. ded_status_reg0 Register Field Descriptions

Bit	Field	Type	Reset	Description
31-23	RESERVED	R/W	X	
22	rcss_tptc_b1_pend	R/W1S	0h	Interrupt Pending Status for rcss_tptc_b1_pend
21	rcss_tptc_b0_pend	R/W1S	0h	Interrupt Pending Status for rcss_tptc_b0_pend
20	rcss_tptc_a1_pend	R/W1S	0h	Interrupt Pending Status for rcss_tptc_a1_pend
19	rcss_tptc_a0_pend	R/W1S	0h	Interrupt Pending Status for rcss_tptc_a0_pend
18	dss_tptc_c5_pend	R/W1S	0h	Interrupt Pending Status for dss_tptc_c5_pend
17	dss_tptc_c4_pend	R/W1S	0h	Interrupt Pending Status for dss_tptc_c4_pend
16	dss_tptc_c3_pend	R/W1S	0h	Interrupt Pending Status for dss_tptc_c3_pend
15	dss_tptc_c2_pend	R/W1S	0h	Interrupt Pending Status for dss_tptc_c2_pend
14	dss_tptc_c1_pend	R/W1S	0h	Interrupt Pending Status for dss_tptc_c1_pend
13	dss_tptc_c0_pend	R/W1S	0h	Interrupt Pending Status for dss_tptc_c0_pend
12	dss_tptc_b1_pend	R/W1S	0h	Interrupt Pending Status for dss_tptc_b1_pend
11	dss_tptc_b0_pend	R/W1S	0h	Interrupt Pending Status for dss_tptc_b0_pend
10	dss_tptc_a1_pend	R/W1S	0h	Interrupt Pending Status for dss_tptc_a1_pend
9	dss_tptc_a0_pend	R/W1S	0h	Interrupt Pending Status for dss_tptc_a0_pend
8-5	RESERVED	R/W	0h	
4	dss_mailbox_pend	R/W1S	0h	Interrupt Pending Status for dss_mailbox_pend
3	dss_l3ram3_pend	R/W1S	0h	Interrupt Pending Status for dss_l3ram3_pend
2	dss_l3ram2_pend	R/W1S	0h	Interrupt Pending Status for dss_l3ram2_pend
1	dss_l3ram1_pend	R/W1S	0h	Interrupt Pending Status for dss_l3ram1_pend
0	dss_l3ram0_pend	R/W1S	0h	Interrupt Pending Status for dss_l3ram0_pend

Copyright © 2025 Texas Instruments Incorporated

11.8.8.4.1.17 ded_enable_set_reg0 Register (Offset = 180h) [Reset = X]

ded_enable_set_reg0 is shown in Table 11-1887.

Return to the Summary Table.

Interrupt Enable Set Register 0

Table 11-1887. ded_enable_set_reg0 Register Field Descriptions

Bit	Field	Type	Reset	Description
31-23	RESERVED	R/W	X	
22	rcss_tptc_b1_enable_set	R/W1S	0h	Interrupt Enable Set Register for rcss_tptc_b1_pend
21	rcss_tptc_b0_enable_set	R/W1S	0h	Interrupt Enable Set Register for rcss_tptc_b0_pend
20	rcss_tptc_a1_enable_set	R/W1S	0h	Interrupt Enable Set Register for rcss_tptc_a1_pend
19	rcss_tptc_a0_enable_set	R/W1S	0h	Interrupt Enable Set Register for rcss_tptc_a0_pend
18	dss_tptc_c5_enable_set	R/W1S	0h	Interrupt Enable Set Register for dss_tptc_c5_pend
17	dss_tptc_c4_enable_set	R/W1S	0h	Interrupt Enable Set Register for dss_tptc_c4_pend
16	dss_tptc_c3_enable_set	R/W1S	0h	Interrupt Enable Set Register for dss_tptc_c3_pend
15	dss_tptc_c2_enable_set	R/W1S	0h	Interrupt Enable Set Register for dss_tptc_c2_pend
14	dss_tptc_c1_enable_set	R/W1S	0h	Interrupt Enable Set Register for dss_tptc_c1_pend
13	dss_tptc_c0_enable_set	R/W1S	0h	Interrupt Enable Set Register for dss_tptc_c0_pend
12	dss_tptc_b1_enable_set	R/W1S	0h	Interrupt Enable Set Register for dss_tptc_b1_pend
11	dss_tptc_b0_enable_set	R/W1S	0h	Interrupt Enable Set Register for dss_tptc_b0_pend
10	dss_tptc_a1_enable_set	R/W1S	0h	Interrupt Enable Set Register for dss_tptc_a1_pend
9	dss_tptc_a0_enable_set	R/W1S	0h	Interrupt Enable Set Register for dss_tptc_a0_pend
8-5	RESERVED	R/W	0h	
4	dss_mailbox_enable_set	R/W1S	0h	Interrupt Enable Set Register for dss_mailbox_pend
3	dss_l3ram3_enable_set	R/W1S	0h	Interrupt Enable Set Register for dss_l3ram3_pend
2	dss_l3ram2_enable_set	R/W1S	0h	Interrupt Enable Set Register for dss_l3ram2_pend
1	dss_l3ram1_enable_set	R/W1S	0h	Interrupt Enable Set Register for dss_l3ram1_pend
0	dss_l3ram0_enable_set	R/W1S	0h	Interrupt Enable Set Register for dss_l3ram0_pend

Copyright © 2025 Texas Instruments Incorporated

11.8.8.4.1.18 ded_enable_clr_reg0 Register (Offset = 1C0h) [Reset = X]

ded_enable_clr_reg0 is shown in Table 11-1888.

Return to the Summary Table.

Interrupt Enable Clear Register 0

Table 11-1888. ded_enable_clr_reg0 Register Field Descriptions

Bit	Field	Type	Reset	Description
31-23	RESERVED	R/W	X	
22	rcss_tptc_b1_enable_clr	R/W1C	0h	Interrupt Enable Clear Register for rcss_tptc_b1_pend
21	rcss_tptc_b0_enable_clr	R/W1C	0h	Interrupt Enable Clear Register for rcss_tptc_b0_pend
20	rcss_tptc_a1_enable_clr	R/W1C	0h	Interrupt Enable Clear Register for rcss_tptc_a1_pend
19	rcss_tptc_a0_enable_clr	R/W1C	0h	Interrupt Enable Clear Register for rcss_tptc_a0_pend
18	dss_tptc_c5_enable_clr	R/W1C	0h	Interrupt Enable Clear Register for dss_tptc_c5_pend
17	dss_tptc_c4_enable_clr	R/W1C	0h	Interrupt Enable Clear Register for dss_tptc_c4_pend
16	dss_tptc_c3_enable_clr	R/W1C	0h	Interrupt Enable Clear Register for dss_tptc_c3_pend
15	dss_tptc_c2_enable_clr	R/W1C	0h	Interrupt Enable Clear Register for dss_tptc_c2_pend
14	dss_tptc_c1_enable_clr	R/W1C	0h	Interrupt Enable Clear Register for dss_tptc_c1_pend
13	dss_tptc_c0_enable_clr	R/W1C	0h	Interrupt Enable Clear Register for dss_tptc_c0_pend
12	dss_tptc_b1_enable_clr	R/W1C	0h	Interrupt Enable Clear Register for dss_tptc_b1_pend
11	dss_tptc_b0_enable_clr	R/W1C	0h	Interrupt Enable Clear Register for dss_tptc_b0_pend
10	dss_tptc_a1_enable_clr	R/W1C	0h	Interrupt Enable Clear Register for dss_tptc_a1_pend
9	dss_tptc_a0_enable_clr	R/W1C	0h	Interrupt Enable Clear Register for dss_tptc_a0_pend
8-5	RESERVED	R/W	0h	
4	dss_mailbox_enable_clr	R/W1C	0h	Interrupt Enable Clear Register for dss_mailbox_pend
3	dss_l3ram3_enable_clr	R/W1C	0h	Interrupt Enable Clear Register for dss_l3ram3_pend
2	dss_l3ram2_enable_clr	R/W1C	0h	Interrupt Enable Clear Register for dss_l3ram2_pend
1	dss_l3ram1_enable_clr	R/W1C	0h	Interrupt Enable Clear Register for dss_l3ram1_pend
0	dss_l3ram0_enable_clr	R/W1C	0h	Interrupt Enable Clear Register for dss_l3ram0_pend

Copyright © 2025 Texas Instruments Incorporated

11.8.8.4.1.19 aggr_enable_set Register (Offset = 200h) [Reset = X]

aggr_enable_set is shown in Table 11-1889.

Return to the Summary Table.

AGGR interrupt enable set Register

Table 11-1889. aggr_enable_set Register Field Descriptions

Bit	Field	Type	Reset	Description
31-2	RESERVED	R/W	X	
1	timeout	R/W1S	0h	interrupt enable set for svbus timeout errors
0	parity	R/W1S	0h	interrupt enable set for parity errors

Copyright © 2025 Texas Instruments Incorporated

11.8.8.4.1.20 aggr_enable_clr Register (Offset = 204h) [Reset = X]

aggr_enable_clr is shown in Table 11-1890.

Return to the Summary Table.

AGGR interrupt enable clear Register

Table 11-1890. aggr_enable_clr Register Field Descriptions

Bit	Field	Type	Reset	Description
31-2	RESERVED	R/W	X	
1	timeout	R/W1C	0h	interrupt enable clear for svbus timeout errors
0	parity	R/W1C	0h	interrupt enable clear for parity errors

Copyright © 2025 Texas Instruments Incorporated

11.8.8.4.1.21 aggr_status_set Register (Offset = 208h) [Reset = X]

aggr_status_set is shown in Table 11-1891.

Return to the Summary Table.

AGGR interrupt status set Register

Table 11-1891. aggr_status_set Register Field Descriptions

Bit	Field	Type	Reset	Description
31-4	RESERVED	R/W	X	
3-2	timeout	R/Wincr	0h	interrupt status set for svbus timeout errors
1-0	parity	R/Wincr	0h	interrupt status set for parity errors

Copyright © 2025 Texas Instruments Incorporated

11.8.8.4.1.22 aggr_status_clr Register (Offset = 20Ch) [Reset = X]

aggr_status_clr is shown in Table 11-1892.

Return to the Summary Table.

AGGR interrupt status clear Register

Table 11-1892. aggr_status_clr Register Field Descriptions

Bit	Field	Type	Reset	Description
31-4	RESERVED	R/W	X	
3-2	timeout	R/Wdecr	0h	interrupt status clear for svbus timeout errors
1-0	parity	R/Wdecr	0h	interrupt status clear for parity errors

Copyright © 2025 Texas Instruments Incorporated

11.8.8.4.2 MSS_ECC_AGGA Registers

Table 11-1893 lists the MSS_ECC_AGGA registers. All register offset addresses not listed in Table 11-1893 should be considered as reserved locations and the register contents should not be modified.

Table 11-1893. MSS_ECC_AGGA Registers

Offset	Acronym	Register Name	Section
0h	rev	Aggregator Revision Register	Section 12.8.8.4.2.1
8h	vector	ECC Vector Register	Section 12.8.8.4.2.2
Ch	stat	Misc Status	Section 12.8.8.4.2.3
10h	wrap_rev	ECC Wrapper Revision Register	Section 12.8.8.4.2.4
14h	ctrl	ECC Control	Section 12.8.8.4.2.5
18h	err_ctrl1	ECC Error Control1 Register	Section 12.8.8.4.2.6
1Ch	err_ctrl2	ECC Error Control2 Register	Section 12.8.8.4.2.7
20h	err_stat1	ECC Error Status1 Register	Section 12.8.8.4.2.8
24h	err_stat2	ECC Error Status2 Register	Section 12.8.8.4.2.9
28h	err_stat3	ECC Error Status3 Register	Section 12.8.8.4.2.10
3Ch	sec_eoi_reg	EOI Register	Section 12.8.8.4.2.11
40h	sec_status_reg0	Interrupt Status Register 0	Section 12.8.8.4.2.12
80h	sec_enable_set_reg0	Interrupt Enable Set Register 0	Section 12.8.8.4.2.13
C0h	sec_enable_clr_reg0	Interrupt Enable Clear Register 0	Section 12.8.8.4.2.14
13Ch	ded_eoi_reg	EOI Register	Section 12.8.8.4.2.15
140h	ded_status_reg0	Interrupt Status Register 0	Section 12.8.8.4.2.16
180h	ded_enable_set_reg0	Interrupt Enable Set Register 0	Section 12.8.8.4.2.17
1C0h	ded_enable_clr_reg0	Interrupt Enable Clear Register 0	Section 12.8.8.4.2.18
200h	aggr_enable_set	AGGR interrupt enable set Register	Section 12.8.8.4.2.19
204h	aggr_enable_clr	AGGR interrupt enable clear Register	Section 12.8.8.4.2.20
208h	aggr_status_set	AGGR interrupt status set Register	Section 12.8.8.4.2.21
20Ch	aggr_status_clr	AGGR interrupt status clear Register	Section 12.8.8.4.2.22

Copyright © 2025 Texas Instruments Incorporated

11.8.8.4.2.1 rev Register (Offset = 0h) [reset = 66A0C200h]

rev is shown in Figure 11-655 and described in Table 11-1894.

Return to the Table 11-1893.

Revision parameters

Figure 11-655. rev Register

31	30	29	28	27	26	25	24	23	22	21	20	19	18	17	16
scheme		bu		module_id											
R-1h		R-2h		R-6A0h											
15	14	13	12	11	10	9	8	7	6	5	4	3	2	1	0
revrtl					revmaj			custom		revmin					
R-18h					R-2h			R-0h		R-0h					

Table 11-1894. rev Register Field Descriptions

Bit	Field	Type	Reset	Description
31-30	scheme	R	1h	Scheme
29-28	bu	R	2h	bu
27-16	module_id	R	6A0h	Module ID
15-11	revrtl	R	18h	RTL version
10-8	revmaj	R	2h	Major version
7-6	custom	R	0h	Custom version
5-0	revmin	R	0h	Minor version

Copyright © 2025 Texas Instruments Incorporated

11.8.8.4.2.2 vector Register (Offset = 8h) [reset = X]

vector is shown in Figure 11-656 and described in Table 11-1895.

Return to the Table 11-1893.

ECC Vector Register

Figure 11-656. vector Register

31	30	29	28	27	26	25	24
RESERVED							rd_svbus_done
R/W-X							R-0h
23	22	21	20	19	18	17	16
rd_svbus_address							
R/W-0h							
15	14	13	12	11	10	9	8
rd_svbus	RESERVED				ecc_vector		
R/W1S-0h	R/W-X				R/W-0h		
7	6	5	4	3	2	1	0
ecc_vector							
R/W-0h							

Table 11-1895. vector Register Field Descriptions

Bit	Field	Type	Reset	Description
31-25	RESERVED	R/W	X	
24	rd_svbus_done	R	0h	Status to indicate if read on serial VBUS is complete
23-16	rd_svbus_address	R/W	0h	Read address
15	rd_svbus	R/W1S	0h	Write 1 to trigger a read on the serial VBUS
14-11	RESERVED	R/W	X	
10-0	ecc_vector	R/W	0h	Value written to select the corresponding ECC RAM for control or status

Copyright © 2025 Texas Instruments Incorporated

11.8.8.4.2.3 stat Register (Offset = Ch) [reset = X]

stat is shown in Figure 11-657 and described in Table 11-1896.

Return to the Table 11-1893.

Misc Status

Figure 11-657. stat Register

31	30	29	28	27	26	25	24	23	22	21	20	19	18	17	16	15	14	13	12	11	10	9	8	7	6	5	4	3	2	1	0
RESERVED																					num_rams										
R-X																					R-1Ch										

Table 11-1896. stat Register Field Descriptions

Bit	Field	Type	Reset	Description
31-11	RESERVED	R	X	
10-0	num_rams	R	1Ch	Indicates the number of RAMS serviced by the ECC aggregator

Copyright © 2025 Texas Instruments Incorporated

11.8.8.4.2.4 wrap_rev Register (Offset = 10h) [reset = 66A40202h]

wrap_rev is shown in Figure 11-658 and described in Table 11-1897.

Return to the Table 11-1893.

Revision parameters

Figure 11-658. wrap_rev Register

31	30	29	28	27	26	25	24	23	22	21	20	19	18	17	16
scheme		bu		module_id											
R-1h		R-2h		R-6A4h											
15	14	13	12	11	10	9	8	7	6	5	4	3	2	1	0
revrtl					revmaj			custom		revmin					
R-0h					R-2h			R-0h		R-2h					

Table 11-1897. wrap_rev Register Field Descriptions

Bit	Field	Type	Reset	Description
31-30	scheme	R	1h	Scheme
29-28	bu	R	2h	bu
27-16	module_id	R	6A4h	Module ID
15-11	revrtl	R	0h	RTL version
10-8	revmaj	R	2h	Major version
7-6	custom	R	0h	Custom version
5-0	revmin	R	2h	Minor version

Copyright © 2025 Texas Instruments Incorporated

11.8.8.4.2.5 ctrl Register (Offset = 14h) [reset = X]

ctrl is shown in Figure 11-659 and described in Table 11-1898.

Return to the Table 11-1893.

ECC Control Register

Figure 11-659. ctrl Register

31	30	29	28	27	26	25	24
RESERVED							
R/W-X							
23	22	21	20	19	18	17	16
RESERVED							
R/W-X							
15	14	13	12	11	10	9	8
RESERVED							check_svbus_timeout
R/W-X							R/W-1h
7	6	5	4	3	2	1	0
check_parity	error_once	force_n_row	force_ded	force_sec	enable_rmw	ecc_check	ecc_enable
R/W-1h	R/W-0h	R/W-0h	R/W-0h	R/W-0h	R/W-1h	R/W-1h	R/W-1h

Table 11-1898. ctrl Register Field Descriptions

Bit	Field	Type	Reset	Description
31-9	RESERVED	R/W	X	
8	check_svbus_timeout	R/W	1h	check for svbus timeout errors
7	check_parity	R/W	1h	check for parity errors
6	error_once	R/W	0h	Force Error only once
5	force_n_row	R/W	0h	Force Error on any RAM read
4	force_ded	R/W	0h	Force Double Bit Error
3	force_sec	R/W	0h	Force Single Bit Error
2	enable_rmw	R/W	1h	Enable rmw
1	ecc_check	R/W	1h	Enable ECC check
0	ecc_enable	R/W	1h	Enable ECC

Copyright © 2025 Texas Instruments Incorporated

11.8.8.4.2.6 err_ctrl1 Register (Offset = 18h) [reset = 0h]

err_ctrl1 is shown in Figure 11-660 and described in Table 11-1899.

Return to the Table 11-1893.

ECC Error Control1 Register

Figure 11-660. err_ctrl1 Register

31	30	29	28	27	26	25	24	23	22	21	20	19	18	17	16	15	14	13	12	11	10	9	8	7	6	5	4	3	2	1	0
ecc_row																															
R/W-0h																															

Table 11-1899. err_ctrl1 Register Field Descriptions

Bit	Field	Type	Reset	Description
31-0	ecc_row	R/W	0h	Row address where single or double-bit error needs to be applied. This is ignored if force_n_row is set

Copyright © 2025 Texas Instruments Incorporated

11.8.8.4.2.7 err_ctrl2 Register (Offset = 1Ch) [reset = 0h]

err_ctrl2 is shown in Figure 11-661 and described in Table 11-1900.

Return to the Table 11-1893.

ECC Error Control2 Register

Figure 11-661. err_ctrl2 Register

31	30	29	28	27	26	25	24	23	22	21	20	19	18	17	16	15	14	13	12	11	10	9	8	7	6	5	4	3	2	1	0
ecc_bit2																ecc_bit1															
R/W-0h																R/W-0h															

Table 11-1900. err_ctrl2 Register Field Descriptions

Bit	Field	Type	Reset	Description
31-16	ecc_bit2	R/W	0h	Data bit that needs to be flipped if double bit error needs to be forced
15-0	ecc_bit1	R/W	0h	Data bit that needs to be flipped when force_sec is set

Copyright © 2025 Texas Instruments Incorporated

11.8.8.4.2.8 err_stat1 Register (Offset = 20h) [reset = 0h]

err_stat1 is shown in Figure 11-662 and described in Table 11-1901.

Return to the Table 11-1893.

ECC Error Status1 Register

Figure 11-662. err_stat1 Register

31	30	29	28	27	26	25	24
ecc_bit1							
R-0h							
23	22	21	20	19	18	17	16
ecc_bit1							
R-0h							
15	14	13	12	11	10	9	8
clr_ctrl_reg_err	clr_parity_err		clr_ecc_other	clr_ecc_ded		clr_ecc_sec	
R/W1C-0h	R/Wdecr-0h		R/W1C-0h	R/Wdecr-0h		R/Wdecr-0h	
7	6	5	4	3	2	1	0
ctr_reg_err	parity_err		ecc_other	ecc_ded		ecc_sec	
R/W1S-0h	R/W1S-0h		R/W1S-0h	R/Wincr-0h		R/Wincr-0h	

Table 11-1901. err_stat1 Register Field Descriptions

Bit	Field	Type	Reset	Description
31-16	ecc_bit1	R	0h	Data bit that corresponds to the single-bit error
15	clr_ctrl_reg_err	R/W1C	0h	Clear control reg error Error Status, you must also re write the contorl ergister itself to clear this
14-13	clr_parity_err	R/Wdecr	0h	Clear parity Error Status
12	clr_ecc_other	R/W1C	0h	Clear other Error Status
11-10	clr_ecc_ded	R/Wdecr	0h	Clear Double Bit Error Status
9-8	clr_ecc_sec	R/Wdecr	0h	Clear Single Bit Error Status
7	ctr_reg_err	R/W1S	0h	control register error pending, Level interrupt
6-5	parity_err	R/W1S	0h	Level parity error Error Status
4	ecc_other	R/W1S	0h	successive single-bit errors have occurred while a writeback is still pending, Level interrupt
3-2	ecc_ded	R/Wincr	0h	Level Double Bit Error Status
1-0	ecc_sec	R/Wincr	0h	Level Single Bit Error Status

Copyright © 2025 Texas Instruments Incorporated

11.8.8.4.2.9 err_stat2 Register (Offset = 24h) [reset = 0h]

err_stat2 is shown in Figure 11-663 and described in Table 11-1902.

Return to the Table 11-1893.

ECC Error Status2 Register

Figure 11-663. err_stat2 Register

31	30	29	28	27	26	25	24	23	22	21	20	19	18	17	16	15	14	13	12	11	10	9	8	7	6	5	4	3	2	1	0
ecc_row																															
R-0h																															

Table 11-1902. err_stat2 Register Field Descriptions

Bit	Field	Type	Reset	Description
31-0	ecc_row	R	0h	Row address where the single or double-bit error has occurred

Copyright © 2025 Texas Instruments Incorporated

11.8.8.4.2.10 err_stat3 Register (Offset = 28h) [reset = X]

err_stat3 is shown in Figure 11-664 and described in Table 11-1903.

Return to the Table 11-1893.

ECC Error Status3 Register

Figure 11-664. err_stat3 Register

31	30	29	28	27	26	25	24
RESERVED							
R/W-X							
23	22	21	20	19	18	17	16
RESERVED							
R/W-X							
15	14	13	12	11	10	9	8
RESERVED						clr_svbus_timeout_err	RESERVED
R/W-X						R/W1C-0h	R/W-X
7	6	5	4	3	2	1	0
RESERVED						svbus_timeout_err	wb_pend
R/W-X						R/W1S-0h	R-0h

Table 11-1903. err_stat3 Register Field Descriptions

Bit	Field	Type	Reset	Description
31-10	RESERVED	R/W	X	
9	clr_svbus_timeout_err	R/W1C	0h	Clear svbus timeout Error Status
8-2	RESERVED	R/W	X	
1	svbus_timeout_err	R/W1S	0h	Level svbus timeout error Error Status
0	wb_pend	R	0h	delayed write back pending Status

Copyright © 2025 Texas Instruments Incorporated

11.8.8.4.2.11 sec_eoi_reg Register (Offset = 3Ch) [reset = X]

sec_eoi_reg is shown in Figure 11-665 and described in Table 11-1904.

Return to the Table 11-1893.

EOI Register

Figure 11-665. sec_eoi_reg Register

31	30	29	28	27	26	25	24
RESERVED							
R/W-X							
23	22	21	20	19	18	17	16
RESERVED							
R/W-X							
15	14	13	12	11	10	9	8
RESERVED							
R/W-X							
7	6	5	4	3	2	1	0
RESERVED							eoi_wr
R/W-X							R/W1S-0h

Table 11-1904. sec_eoi_reg Register Field Descriptions

Bit	Field	Type	Reset	Description
31-1	RESERVED	R/W	X	
0	eoi_wr	R/W1S	0h	EOI Register

Copyright © 2025 Texas Instruments Incorporated

11.8.8.4.2.12 sec_status_reg0 Register (Offset = 40h) [reset = X]

sec_status_reg0 is shown in Figure 11-666 and described in Table 11-1905.

Return to the Table 11-1893.

Interrupt Status Register 0

Figure 11-666. sec_status_reg0 Register

31	30	29	28	27	26	25	24
RESERVED				cpu0_ks_vim_ramecc_pend	b1tcm0_bank1_pend	b1tcm0_bank0_pend	b0tcm0_bank1_pend
R/W-X				R/W1S-0h	R/W1S-0h	R/W1S-0h	R/W1S-0h
23	22	21	20	19	18	17	16
b0tcm0_bank0_pend	atcm0_bank1_pend	atcm0_bank0_pend	cpu0_ddata_ram7_pend	cpu0_ddata_ram6_pend	cpu0_ddata_ram5_pend	cpu0_ddata_ram4_pend	cpu0_ddata_ram3_pend
R/W1S-0h	R/W1S-0h	R/W1S-0h	R/W1S-0h	R/W1S-0h	R/W1S-0h	R/W1S-0h	R/W1S-0h
15	14	13	12	11	10	9	8
cpu0_ddata_ram2_pend	cpu0_ddata_ram1_pend	cpu0_ddata_ram0_pend	cpu0_ddirty_ram_pend	cpu0_dtag_ram3_pend	cpu0_dtag_ram2_pend	cpu0_dtag_ram1_pend	cpu0_dtag_ram0_pend
R/W1S-0h	R/W1S-0h	R/W1S-0h	R/W1S-0h	R/W1S-0h	R/W1S-0h	R/W1S-0h	R/W1S-0h
7	6	5	4	3	2	1	0
cpu0_idata_bank3_pend	cpu0_idata_bank2_pend	cpu0_idata_bank1_pend	cpu0_idata_bank0_pend	cpu0_itag_ram3_pend	cpu0_itag_ram2_pend	cpu0_itag_ram1_pend	cpu0_itag_ram0_pend
R/W1S-0h	R/W1S-0h	R/W1S-0h	R/W1S-0h	R/W1S-0h	R/W1S-0h	R/W1S-0h	R/W1S-0h

Table 11-1905. sec_status_reg0 Register Field Descriptions

Bit	Field	Type	Reset	Description
31-28	RESERVED	R/W	X	
27	cpu0_ks_vim_ramecc_pend	R/W1S	0h	Interrupt Pending Status for cpu0_ks_vim_ramecc_pend
26	b1tcm0_bank1_pend	R/W1S	0h	Interrupt Pending Status for b1tcm0_bank1_pend
25	b1tcm0_bank0_pend	R/W1S	0h	Interrupt Pending Status for b1tcm0_bank0_pend
24	b0tcm0_bank1_pend	R/W1S	0h	Interrupt Pending Status for b0tcm0_bank1_pend
23	b0tcm0_bank0_pend	R/W1S	0h	Interrupt Pending Status for b0tcm0_bank0_pend
22	atcm0_bank1_pend	R/W1S	0h	Interrupt Pending Status for atcm0_bank1_pend
21	atcm0_bank0_pend	R/W1S	0h	Interrupt Pending Status for atcm0_bank0_pend
20	cpu0_ddata_ram7_pend	R/W1S	0h	Interrupt Pending Status for cpu0_ddata_ram7_pend
19	cpu0_ddata_ram6_pend	R/W1S	0h	Interrupt Pending Status for cpu0_ddata_ram6_pend
18	cpu0_ddata_ram5_pend	R/W1S	0h	Interrupt Pending Status for cpu0_ddata_ram5_pend
17	cpu0_ddata_ram4_pend	R/W1S	0h	Interrupt Pending Status for cpu0_ddata_ram4_pend
16	cpu0_ddata_ram3_pend	R/W1S	0h	Interrupt Pending Status for cpu0_ddata_ram3_pend
15	cpu0_ddata_ram2_pend	R/W1S	0h	Interrupt Pending Status for cpu0_ddata_ram2_pend
14	cpu0_ddata_ram1_pend	R/W1S	0h	Interrupt Pending Status for cpu0_ddata_ram1_pend
13	cpu0_ddata_ram0_pend	R/W1S	0h	Interrupt Pending Status for cpu0_ddata_ram0_pend
12	cpu0_ddirty_ram_pend	R/W1S	0h	Interrupt Pending Status for cpu0_ddirty_ram_pend
11	cpu0_dtag_ram3_pend	R/W1S	0h	Interrupt Pending Status for cpu0_dtag_ram3_pend
10	cpu0_dtag_ram2_pend	R/W1S	0h	Interrupt Pending Status for cpu0_dtag_ram2_pend

Copyright © 2025 Texas Instruments Incorporated

Table 11-1905. sec_status_reg0 Register Field Descriptions (continued)

Bit	Field	Type	Reset	Description
9	cpu0_dtag_ram1_pend	R/W1S	0h	Interrupt Pending Status for cpu0_dtag_ram1_pend
8	cpu0_dtag_ram0_pend	R/W1S	0h	Interrupt Pending Status for cpu0_dtag_ram0_pend
7	cpu0_idata_bank3_pend	R/W1S	0h	Interrupt Pending Status for cpu0_idata_bank3_pend
6	cpu0_idata_bank2_pend	R/W1S	0h	Interrupt Pending Status for cpu0_idata_bank2_pend
5	cpu0_idata_bank1_pend	R/W1S	0h	Interrupt Pending Status for cpu0_idata_bank1_pend
4	cpu0_idata_bank0_pend	R/W1S	0h	Interrupt Pending Status for cpu0_idata_bank0_pend
3	cpu0_itag_ram3_pend	R/W1S	0h	Interrupt Pending Status for cpu0_itag_ram3_pend
2	cpu0_itag_ram2_pend	R/W1S	0h	Interrupt Pending Status for cpu0_itag_ram2_pend
1	cpu0_itag_ram1_pend	R/W1S	0h	Interrupt Pending Status for cpu0_itag_ram1_pend
0	cpu0_itag_ram0_pend	R/W1S	0h	Interrupt Pending Status for cpu0_itag_ram0_pend

Copyright © 2025 Texas Instruments Incorporated

11.8.8.4.2.13 sec_enable_set_reg0 Register (Offset = 80h) [reset = X]

sec_enable_set_reg0 is shown in Figure 11-667 and described in Table 11-1906.

Return to the Table 11-1893.

Interrupt Enable Set Register 0

Figure 11-667. sec_enable_set_reg0 Register

31	30	29	28	27	26	25	24
RESERVED				cpu0_ks_vim_ramecc_enable_set	b1tcm0_bank1_enable_set	b1tcm0_bank0_enable_set	b0tcm0_bank1_enable_set
R/W-X				R/W1S-0h	R/W1S-0h	R/W1S-0h	R/W1S-0h
23	22	21	20	19	18	17	16
b0tcm0_bank0_enable_set	atcm0_bank1_enable_set	atcm0_bank0_enable_set	cpu0_ddata_ram7_enable_set	cpu0_ddata_ram6_enable_set	cpu0_ddata_ram5_enable_set	cpu0_ddata_ram4_enable_set	cpu0_ddata_ram3_enable_set
R/W1S-0h	R/W1S-0h	R/W1S-0h	R/W1S-0h	R/W1S-0h	R/W1S-0h	R/W1S-0h	R/W1S-0h
15	14	13	12	11	10	9	8
cpu0_ddata_ram2_enable_set	cpu0_ddata_ram1_enable_set	cpu0_ddata_ram0_enable_set	cpu0_ddirty_ram_enable_set	cpu0_dtag_ram3_enable_set	cpu0_dtag_ram2_enable_set	cpu0_dtag_ram1_enable_set	cpu0_dtag_ram0_enable_set
R/W1S-0h	R/W1S-0h	R/W1S-0h	R/W1S-0h	R/W1S-0h	R/W1S-0h	R/W1S-0h	R/W1S-0h
7	6	5	4	3	2	1	0
cpu0_idata_bank3_enable_set	cpu0_idata_bank2_enable_set	cpu0_idata_bank1_enable_set	cpu0_idata_bank0_enable_set	cpu0_itag_ram3_enable_set	cpu0_itag_ram2_enable_set	cpu0_itag_ram1_enable_set	cpu0_itag_ram0_enable_set
R/W1S-0h	R/W1S-0h	R/W1S-0h	R/W1S-0h	R/W1S-0h	R/W1S-0h	R/W1S-0h	R/W1S-0h

Table 11-1906. sec_enable_set_reg0 Register Field Descriptions

Bit	Field	Type	Reset	Description
31-28	RESERVED	R/W	X	
27	cpu0_ks_vim_ramecc_enable_set	R/W1S	0h	Interrupt Enable Set Register for cpu0_ks_vim_ramecc_pend
26	b1tcm0_bank1_enable_set	R/W1S	0h	Interrupt Enable Set Register for b1tcm0_bank1_pend
25	b1tcm0_bank0_enable_set	R/W1S	0h	Interrupt Enable Set Register for b1tcm0_bank0_pend
24	b0tcm0_bank1_enable_set	R/W1S	0h	Interrupt Enable Set Register for b0tcm0_bank1_pend
23	b0tcm0_bank0_enable_set	R/W1S	0h	Interrupt Enable Set Register for b0tcm0_bank0_pend
22	atcm0_bank1_enable_set	R/W1S	0h	Interrupt Enable Set Register for atcm0_bank1_pend
21	atcm0_bank0_enable_set	R/W1S	0h	Interrupt Enable Set Register for atcm0_bank0_pend
20	cpu0_ddata_ram7_enable_set	R/W1S	0h	Interrupt Enable Set Register for cpu0_ddata_ram7_pend
19	cpu0_ddata_ram6_enable_set	R/W1S	0h	Interrupt Enable Set Register for cpu0_ddata_ram6_pend
18	cpu0_ddata_ram5_enable_set	R/W1S	0h	Interrupt Enable Set Register for cpu0_ddata_ram5_pend
17	cpu0_ddata_ram4_enable_set	R/W1S	0h	Interrupt Enable Set Register for cpu0_ddata_ram4_pend
16	cpu0_ddata_ram3_enable_set	R/W1S	0h	Interrupt Enable Set Register for cpu0_ddata_ram3_pend
15	cpu0_ddata_ram2_enable_set	R/W1S	0h	Interrupt Enable Set Register for cpu0_ddata_ram2_pend

Copyright © 2025 Texas Instruments Incorporated

Table 11-1906. sec_enable_set_reg0 Register Field Descriptions (continued)

Bit	Field	Type	Reset	Description
14	cpu0_ddata_ram1_enable_set	R/W1S	0h	Interrupt Enable Set Register for cpu0_ddata_ram1_pend
13	cpu0_ddata_ram0_enable_set	R/W1S	0h	Interrupt Enable Set Register for cpu0_ddata_ram0_pend
12	cpu0_ddirty_ram_enable_set	R/W1S	0h	Interrupt Enable Set Register for cpu0_ddirty_ram_pend
11	cpu0_dtag_ram3_enable_set	R/W1S	0h	Interrupt Enable Set Register for cpu0_dtag_ram3_pend
10	cpu0_dtag_ram2_enable_set	R/W1S	0h	Interrupt Enable Set Register for cpu0_dtag_ram2_pend
9	cpu0_dtag_ram1_enable_set	R/W1S	0h	Interrupt Enable Set Register for cpu0_dtag_ram1_pend
8	cpu0_dtag_ram0_enable_set	R/W1S	0h	Interrupt Enable Set Register for cpu0_dtag_ram0_pend
7	cpu0_idata_bank3_enable_set	R/W1S	0h	Interrupt Enable Set Register for cpu0_idata_bank3_pend
6	cpu0_idata_bank2_enable_set	R/W1S	0h	Interrupt Enable Set Register for cpu0_idata_bank2_pend
5	cpu0_idata_bank1_enable_set	R/W1S	0h	Interrupt Enable Set Register for cpu0_idata_bank1_pend
4	cpu0_idata_bank0_enable_set	R/W1S	0h	Interrupt Enable Set Register for cpu0_idata_bank0_pend
3	cpu0_itag_ram3_enable_set	R/W1S	0h	Interrupt Enable Set Register for cpu0_itag_ram3_pend
2	cpu0_itag_ram2_enable_set	R/W1S	0h	Interrupt Enable Set Register for cpu0_itag_ram2_pend
1	cpu0_itag_ram1_enable_set	R/W1S	0h	Interrupt Enable Set Register for cpu0_itag_ram1_pend
0	cpu0_itag_ram0_enable_set	R/W1S	0h	Interrupt Enable Set Register for cpu0_itag_ram0_pend

Copyright © 2025 Texas Instruments Incorporated

11.8.8.4.2.14 sec_enable_clr_reg0 Register (Offset = C0h) [reset = X]

sec_enable_clr_reg0 is shown in Figure 11-668 and described in Table 11-1907.

Return to the Table 11-1893.

Interrupt Enable Clear Register 0

Figure 11-668. sec_enable_clr_reg0 Register

31	30	29	28	27	26	25	24
RESERVED				cpu0_ks_vim_ramecc_enable_clr	b1tcm0_bank1_enable_clr	b1tcm0_bank0_enable_clr	b0tcm0_bank1_enable_clr
R/W-X				R/W1C-0h	R/W1C-0h	R/W1C-0h	R/W1C-0h
23	22	21	20	19	18	17	16
b0tcm0_bank0_enable_clr	atcm0_bank1_enable_clr	atcm0_bank0_enable_clr	cpu0_ddata_ram7_enable_clr	cpu0_ddata_ram6_enable_clr	cpu0_ddata_ram5_enable_clr	cpu0_ddata_ram4_enable_clr	cpu0_ddata_ram3_enable_clr
R/W1C-0h	R/W1C-0h	R/W1C-0h	R/W1C-0h	R/W1C-0h	R/W1C-0h	R/W1C-0h	R/W1C-0h
15	14	13	12	11	10	9	8
cpu0_ddata_ram2_enable_clr	cpu0_ddata_ram1_enable_clr	cpu0_ddata_ram0_enable_clr	cpu0_ddirty_ram_enable_clr	cpu0_dtag_ram3_enable_clr	cpu0_dtag_ram2_enable_clr	cpu0_dtag_ram1_enable_clr	cpu0_dtag_ram0_enable_clr
R/W1C-0h	R/W1C-0h	R/W1C-0h	R/W1C-0h	R/W1C-0h	R/W1C-0h	R/W1C-0h	R/W1C-0h
7	6	5	4	3	2	1	0
cpu0_idata_bank3_enable_clr	cpu0_idata_bank2_enable_clr	cpu0_idata_bank1_enable_clr	cpu0_idata_bank0_enable_clr	cpu0_itag_ram3_enable_clr	cpu0_itag_ram2_enable_clr	cpu0_itag_ram1_enable_clr	cpu0_itag_ram0_enable_clr
R/W1C-0h	R/W1C-0h	R/W1C-0h	R/W1C-0h	R/W1C-0h	R/W1C-0h	R/W1C-0h	R/W1C-0h

Table 11-1907. sec_enable_clr_reg0 Register Field Descriptions

Bit	Field	Type	Reset	Description
31-28	RESERVED	R/W	X	
27	cpu0_ks_vim_ramecc_enable_clr	R/W1C	0h	Interrupt Enable Clear Register for cpu0_ks_vim_ramecc_pend
26	b1tcm0_bank1_enable_clr	R/W1C	0h	Interrupt Enable Clear Register for b1tcm0_bank1_pend
25	b1tcm0_bank0_enable_clr	R/W1C	0h	Interrupt Enable Clear Register for b1tcm0_bank0_pend
24	b0tcm0_bank1_enable_clr	R/W1C	0h	Interrupt Enable Clear Register for b0tcm0_bank1_pend
23	b0tcm0_bank0_enable_clr	R/W1C	0h	Interrupt Enable Clear Register for b0tcm0_bank0_pend
22	atcm0_bank1_enable_clr	R/W1C	0h	Interrupt Enable Clear Register for atcm0_bank1_pend
21	atcm0_bank0_enable_clr	R/W1C	0h	Interrupt Enable Clear Register for atcm0_bank0_pend
20	cpu0_ddata_ram7_enable_clr	R/W1C	0h	Interrupt Enable Clear Register for cpu0_ddata_ram7_pend
19	cpu0_ddata_ram6_enable_clr	R/W1C	0h	Interrupt Enable Clear Register for cpu0_ddata_ram6_pend
18	cpu0_ddata_ram5_enable_clr	R/W1C	0h	Interrupt Enable Clear Register for cpu0_ddata_ram5_pend
17	cpu0_ddata_ram4_enable_clr	R/W1C	0h	Interrupt Enable Clear Register for cpu0_ddata_ram4_pend
16	cpu0_ddata_ram3_enable_clr	R/W1C	0h	Interrupt Enable Clear Register for cpu0_ddata_ram3_pend
15	cpu0_ddata_ram2_enable_clr	R/W1C	0h	Interrupt Enable Clear Register for cpu0_ddata_ram2_pend
14	cpu0_ddata_ram1_enable_clr	R/W1C	0h	Interrupt Enable Clear Register for cpu0_ddata_ram1_pend

Copyright © 2025 Texas Instruments Incorporated

Table 11-1907. sec_enable_clr_reg0 Register Field Descriptions (continued)

Bit	Field	Type	Reset	Description
13	cpu0_ddata_ram0_enable_clr	R/W1C	0h	Interrupt Enable Clear Register for cpu0_ddata_ram0_pend
12	cpu0_ddirty_ram_enable_clr	R/W1C	0h	Interrupt Enable Clear Register for cpu0_ddirty_ram_pend
11	cpu0_dtag_ram3_enable_clr	R/W1C	0h	Interrupt Enable Clear Register for cpu0_dtag_ram3_pend
10	cpu0_dtag_ram2_enable_clr	R/W1C	0h	Interrupt Enable Clear Register for cpu0_dtag_ram2_pend
9	cpu0_dtag_ram1_enable_clr	R/W1C	0h	Interrupt Enable Clear Register for cpu0_dtag_ram1_pend
8	cpu0_dtag_ram0_enable_clr	R/W1C	0h	Interrupt Enable Clear Register for cpu0_dtag_ram0_pend
7	cpu0_idata_bank3_enable_clr	R/W1C	0h	Interrupt Enable Clear Register for cpu0_idata_bank3_pend
6	cpu0_idata_bank2_enable_clr	R/W1C	0h	Interrupt Enable Clear Register for cpu0_idata_bank2_pend
5	cpu0_idata_bank1_enable_clr	R/W1C	0h	Interrupt Enable Clear Register for cpu0_idata_bank1_pend
4	cpu0_idata_bank0_enable_clr	R/W1C	0h	Interrupt Enable Clear Register for cpu0_idata_bank0_pend
3	cpu0_itag_ram3_enable_clr	R/W1C	0h	Interrupt Enable Clear Register for cpu0_itag_ram3_pend
2	cpu0_itag_ram2_enable_clr	R/W1C	0h	Interrupt Enable Clear Register for cpu0_itag_ram2_pend
1	cpu0_itag_ram1_enable_clr	R/W1C	0h	Interrupt Enable Clear Register for cpu0_itag_ram1_pend
0	cpu0_itag_ram0_enable_clr	R/W1C	0h	Interrupt Enable Clear Register for cpu0_itag_ram0_pend

Copyright © 2025 Texas Instruments Incorporated

11.8.8.4.2.15 ded_eoi_reg Register (Offset = 13Ch) [reset = X]

ded_eoi_reg is shown in Figure 11-669 and described in Table 11-1908.

Return to the Table 11-1893.

EOI Register

Figure 11-669. ded_eoi_reg Register

31	30	29	28	27	26	25	24
RESERVED							
R/W-X							
23	22	21	20	19	18	17	16
RESERVED							
R/W-X							
15	14	13	12	11	10	9	8
RESERVED							
R/W-X							
7	6	5	4	3	2	1	0
RESERVED							eoi_wr
R/W-X							R/W1S-0h

Table 11-1908. ded_eoi_reg Register Field Descriptions

Bit	Field	Type	Reset	Description
31-1	RESERVED	R/W	X	
0	eoi_wr	R/W1S	0h	EOI Register

Copyright © 2025 Texas Instruments Incorporated

11.8.8.4.2.16 ded_status_reg0 Register (Offset = 140h) [reset = X]

ded_status_reg0 is shown in Figure 11-670 and described in Table 11-1909.

Return to the Table 11-1893.

Interrupt Status Register 0

Figure 11-670. ded_status_reg0 Register

31	30	29	28	27	26	25	24
RESERVED				cpu0_ks_vim_ramecc_pend	b1tcm0_bank1_pend	b1tcm0_bank0_pend	b0tcm0_bank1_pend
R/W-X				R/W1S-0h	R/W1S-0h	R/W1S-0h	R/W1S-0h
23	22	21	20	19	18	17	16
b0tcm0_bank0_pend	atcm0_bank1_pend	atcm0_bank0_pend	cpu0_ddata_ram7_pend	cpu0_ddata_ram6_pend	cpu0_ddata_ram5_pend	cpu0_ddata_ram4_pend	cpu0_ddata_ram3_pend
R/W1S-0h	R/W1S-0h	R/W1S-0h	R/W1S-0h	R/W1S-0h	R/W1S-0h	R/W1S-0h	R/W1S-0h
15	14	13	12	11	10	9	8
cpu0_ddata_ram2_pend	cpu0_ddata_ram1_pend	cpu0_ddata_ram0_pend	cpu0_ddirty_ram_pend	cpu0_dtag_ram3_pend	cpu0_dtag_ram2_pend	cpu0_dtag_ram1_pend	cpu0_dtag_ram0_pend
R/W1S-0h	R/W1S-0h	R/W1S-0h	R/W1S-0h	R/W1S-0h	R/W1S-0h	R/W1S-0h	R/W1S-0h
7	6	5	4	3	2	1	0
cpu0_idata_bank3_pend	cpu0_idata_bank2_pend	cpu0_idata_bank1_pend	cpu0_idata_bank0_pend	cpu0_itag_ram3_pend	cpu0_itag_ram2_pend	cpu0_itag_ram1_pend	cpu0_itag_ram0_pend
R/W1S-0h	R/W1S-0h	R/W1S-0h	R/W1S-0h	R/W1S-0h	R/W1S-0h	R/W1S-0h	R/W1S-0h

Table 11-1909. ded_status_reg0 Register Field Descriptions

Bit	Field	Type	Reset	Description
31-28	RESERVED	R/W	X	
27	cpu0_ks_vim_ramecc_pend	R/W1S	0h	Interrupt Pending Status for cpu0_ks_vim_ramecc_pend
26	b1tcm0_bank1_pend	R/W1S	0h	Interrupt Pending Status for b1tcm0_bank1_pend
25	b1tcm0_bank0_pend	R/W1S	0h	Interrupt Pending Status for b1tcm0_bank0_pend
24	b0tcm0_bank1_pend	R/W1S	0h	Interrupt Pending Status for b0tcm0_bank1_pend
23	b0tcm0_bank0_pend	R/W1S	0h	Interrupt Pending Status for b0tcm0_bank0_pend
22	atcm0_bank1_pend	R/W1S	0h	Interrupt Pending Status for atcm0_bank1_pend
21	atcm0_bank0_pend	R/W1S	0h	Interrupt Pending Status for atcm0_bank0_pend
20	cpu0_ddata_ram7_pend	R/W1S	0h	Interrupt Pending Status for cpu0_ddata_ram7_pend
19	cpu0_ddata_ram6_pend	R/W1S	0h	Interrupt Pending Status for cpu0_ddata_ram6_pend
18	cpu0_ddata_ram5_pend	R/W1S	0h	Interrupt Pending Status for cpu0_ddata_ram5_pend
17	cpu0_ddata_ram4_pend	R/W1S	0h	Interrupt Pending Status for cpu0_ddata_ram4_pend
16	cpu0_ddata_ram3_pend	R/W1S	0h	Interrupt Pending Status for cpu0_ddata_ram3_pend
15	cpu0_ddata_ram2_pend	R/W1S	0h	Interrupt Pending Status for cpu0_ddata_ram2_pend
14	cpu0_ddata_ram1_pend	R/W1S	0h	Interrupt Pending Status for cpu0_ddata_ram1_pend
13	cpu0_ddata_ram0_pend	R/W1S	0h	Interrupt Pending Status for cpu0_ddata_ram0_pend
12	cpu0_ddirty_ram_pend	R/W1S	0h	Interrupt Pending Status for cpu0_ddirty_ram_pend
11	cpu0_dtag_ram3_pend	R/W1S	0h	Interrupt Pending Status for cpu0_dtag_ram3_pend
10	cpu0_dtag_ram2_pend	R/W1S	0h	Interrupt Pending Status for cpu0_dtag_ram2_pend

Copyright © 2025 Texas Instruments Incorporated

Table 11-1909. ded_status_reg0 Register Field Descriptions (continued)

Bit	Field	Type	Reset	Description
9	cpu0_dtag_ram1_pend	R/W1S	0h	Interrupt Pending Status for cpu0_dtag_ram1_pend
8	cpu0_dtag_ram0_pend	R/W1S	0h	Interrupt Pending Status for cpu0_dtag_ram0_pend
7	cpu0_idata_bank3_pend	R/W1S	0h	Interrupt Pending Status for cpu0_idata_bank3_pend
6	cpu0_idata_bank2_pend	R/W1S	0h	Interrupt Pending Status for cpu0_idata_bank2_pend
5	cpu0_idata_bank1_pend	R/W1S	0h	Interrupt Pending Status for cpu0_idata_bank1_pend
4	cpu0_idata_bank0_pend	R/W1S	0h	Interrupt Pending Status for cpu0_idata_bank0_pend
3	cpu0_itag_ram3_pend	R/W1S	0h	Interrupt Pending Status for cpu0_itag_ram3_pend
2	cpu0_itag_ram2_pend	R/W1S	0h	Interrupt Pending Status for cpu0_itag_ram2_pend
1	cpu0_itag_ram1_pend	R/W1S	0h	Interrupt Pending Status for cpu0_itag_ram1_pend
0	cpu0_itag_ram0_pend	R/W1S	0h	Interrupt Pending Status for cpu0_itag_ram0_pend

Copyright © 2025 Texas Instruments Incorporated

11.8.8.4.2.17 ded_enable_set_reg0 Register (Offset = 180h) [reset = X]

ded_enable_set_reg0 is shown in Figure 11-671 and described in Table 11-1910.

Return to the Table 11-1893.

Interrupt Enable Set Register 0

Figure 11-671. ded_enable_set_reg0 Register

31	30	29	28	27	26	25	24
RESERVED				cpu0_ks_vim_ramecc_enable_set	b1tcm0_bank1_enable_set	b1tcm0_bank0_enable_set	b0tcm0_bank1_enable_set
R/W-X				R/W1S-0h	R/W1S-0h	R/W1S-0h	R/W1S-0h
23	22	21	20	19	18	17	16
b0tcm0_bank0_enable_set	atcm0_bank1_enable_set	atcm0_bank0_enable_set	cpu0_ddata_ram7_enable_set	cpu0_ddata_ram6_enable_set	cpu0_ddata_ram5_enable_set	cpu0_ddata_ram4_enable_set	cpu0_ddata_ram3_enable_set
R/W1S-0h	R/W1S-0h	R/W1S-0h	R/W1S-0h	R/W1S-0h	R/W1S-0h	R/W1S-0h	R/W1S-0h
15	14	13	12	11	10	9	8
cpu0_ddata_ram2_enable_set	cpu0_ddata_ram1_enable_set	cpu0_ddata_ram0_enable_set	cpu0_ddirty_ram_enable_set	cpu0_dtag_ram3_enable_set	cpu0_dtag_ram2_enable_set	cpu0_dtag_ram1_enable_set	cpu0_dtag_ram0_enable_set
R/W1S-0h	R/W1S-0h	R/W1S-0h	R/W1S-0h	R/W1S-0h	R/W1S-0h	R/W1S-0h	R/W1S-0h
7	6	5	4	3	2	1	0
cpu0_idata_bank3_enable_set	cpu0_idata_bank2_enable_set	cpu0_idata_bank1_enable_set	cpu0_idata_bank0_enable_set	cpu0_itag_ram3_enable_set	cpu0_itag_ram2_enable_set	cpu0_itag_ram1_enable_set	cpu0_itag_ram0_enable_set
R/W1S-0h	R/W1S-0h	R/W1S-0h	R/W1S-0h	R/W1S-0h	R/W1S-0h	R/W1S-0h	R/W1S-0h

Table 11-1910. ded_enable_set_reg0 Register Field Descriptions

Bit	Field	Type	Reset	Description
31-28	RESERVED	R/W	X	
27	cpu0_ks_vim_ramecc_enable_set	R/W1S	0h	Interrupt Enable Set Register for cpu0_ks_vim_ramecc_pend
26	b1tcm0_bank1_enable_set	R/W1S	0h	Interrupt Enable Set Register for b1tcm0_bank1_pend
25	b1tcm0_bank0_enable_set	R/W1S	0h	Interrupt Enable Set Register for b1tcm0_bank0_pend
24	b0tcm0_bank1_enable_set	R/W1S	0h	Interrupt Enable Set Register for b0tcm0_bank1_pend
23	b0tcm0_bank0_enable_set	R/W1S	0h	Interrupt Enable Set Register for b0tcm0_bank0_pend
22	atcm0_bank1_enable_set	R/W1S	0h	Interrupt Enable Set Register for atcm0_bank1_pend
21	atcm0_bank0_enable_set	R/W1S	0h	Interrupt Enable Set Register for atcm0_bank0_pend
20	cpu0_ddata_ram7_enable_set	R/W1S	0h	Interrupt Enable Set Register for cpu0_ddata_ram7_pend
19	cpu0_ddata_ram6_enable_set	R/W1S	0h	Interrupt Enable Set Register for cpu0_ddata_ram6_pend
18	cpu0_ddata_ram5_enable_set	R/W1S	0h	Interrupt Enable Set Register for cpu0_ddata_ram5_pend
17	cpu0_ddata_ram4_enable_set	R/W1S	0h	Interrupt Enable Set Register for cpu0_ddata_ram4_pend
16	cpu0_ddata_ram3_enable_set	R/W1S	0h	Interrupt Enable Set Register for cpu0_ddata_ram3_pend
15	cpu0_ddata_ram2_enable_set	R/W1S	0h	Interrupt Enable Set Register for cpu0_ddata_ram2_pend

Copyright © 2025 Texas Instruments Incorporated

Table 11-1910. ded_enable_set_reg0 Register Field Descriptions (continued)

Bit	Field	Type	Reset	Description
14	cpu0_ddata_ram1_enable_set	R/W1S	0h	Interrupt Enable Set Register for cpu0_ddata_ram1_pend
13	cpu0_ddata_ram0_enable_set	R/W1S	0h	Interrupt Enable Set Register for cpu0_ddata_ram0_pend
12	cpu0_ddirty_ram_enable_set	R/W1S	0h	Interrupt Enable Set Register for cpu0_ddirty_ram_pend
11	cpu0_dtag_ram3_enable_set	R/W1S	0h	Interrupt Enable Set Register for cpu0_dtag_ram3_pend
10	cpu0_dtag_ram2_enable_set	R/W1S	0h	Interrupt Enable Set Register for cpu0_dtag_ram2_pend
9	cpu0_dtag_ram1_enable_set	R/W1S	0h	Interrupt Enable Set Register for cpu0_dtag_ram1_pend
8	cpu0_dtag_ram0_enable_set	R/W1S	0h	Interrupt Enable Set Register for cpu0_dtag_ram0_pend
7	cpu0_idata_bank3_enable_set	R/W1S	0h	Interrupt Enable Set Register for cpu0_idata_bank3_pend
6	cpu0_idata_bank2_enable_set	R/W1S	0h	Interrupt Enable Set Register for cpu0_idata_bank2_pend
5	cpu0_idata_bank1_enable_set	R/W1S	0h	Interrupt Enable Set Register for cpu0_idata_bank1_pend
4	cpu0_idata_bank0_enable_set	R/W1S	0h	Interrupt Enable Set Register for cpu0_idata_bank0_pend
3	cpu0_itag_ram3_enable_set	R/W1S	0h	Interrupt Enable Set Register for cpu0_itag_ram3_pend
2	cpu0_itag_ram2_enable_set	R/W1S	0h	Interrupt Enable Set Register for cpu0_itag_ram2_pend
1	cpu0_itag_ram1_enable_set	R/W1S	0h	Interrupt Enable Set Register for cpu0_itag_ram1_pend
0	cpu0_itag_ram0_enable_set	R/W1S	0h	Interrupt Enable Set Register for cpu0_itag_ram0_pend

Copyright © 2025 Texas Instruments Incorporated

11.8.8.4.2.18 ded_enable_clr_reg0 Register (Offset = 1C0h) [reset = X]

ded_enable_clr_reg0 is shown in Figure 11-672 and described in Table 11-1911.

Return to the Table 11-1893.

Interrupt Enable Clear Register 0

Figure 11-672. ded_enable_clr_reg0 Register

31	30	29	28	27	26	25	24
RESERVED				cpu0_ks_vim_ramecc_enable_clr	b1tcm0_bank1_enable_clr	b1tcm0_bank0_enable_clr	b0tcm0_bank1_enable_clr
R/W-X				R/W1C-0h	R/W1C-0h	R/W1C-0h	R/W1C-0h
23	22	21	20	19	18	17	16
b0tcm0_bank0_enable_clr	atcm0_bank1_enable_clr	atcm0_bank0_enable_clr	cpu0_ddata_ram7_enable_clr	cpu0_ddata_ram6_enable_clr	cpu0_ddata_ram5_enable_clr	cpu0_ddata_ram4_enable_clr	cpu0_ddata_ram3_enable_clr
R/W1C-0h	R/W1C-0h	R/W1C-0h	R/W1C-0h	R/W1C-0h	R/W1C-0h	R/W1C-0h	R/W1C-0h
15	14	13	12	11	10	9	8
cpu0_ddata_ram2_enable_clr	cpu0_ddata_ram1_enable_clr	cpu0_ddata_ram0_enable_clr	cpu0_ddirty_ram_enable_clr	cpu0_dtag_ram3_enable_clr	cpu0_dtag_ram2_enable_clr	cpu0_dtag_ram1_enable_clr	cpu0_dtag_ram0_enable_clr
R/W1C-0h	R/W1C-0h	R/W1C-0h	R/W1C-0h	R/W1C-0h	R/W1C-0h	R/W1C-0h	R/W1C-0h
7	6	5	4	3	2	1	0
cpu0_idata_bank3_enable_clr	cpu0_idata_bank2_enable_clr	cpu0_idata_bank1_enable_clr	cpu0_idata_bank0_enable_clr	cpu0_itag_ram3_enable_clr	cpu0_itag_ram2_enable_clr	cpu0_itag_ram1_enable_clr	cpu0_itag_ram0_enable_clr
R/W1C-0h	R/W1C-0h	R/W1C-0h	R/W1C-0h	R/W1C-0h	R/W1C-0h	R/W1C-0h	R/W1C-0h

Table 11-1911. ded_enable_clr_reg0 Register Field Descriptions

Bit	Field	Type	Reset	Description
31-28	RESERVED	R/W	X	
27	cpu0_ks_vim_ramecc_enable_clr	R/W1C	0h	Interrupt Enable Clear Register for cpu0_ks_vim_ramecc_pend
26	b1tcm0_bank1_enable_clr	R/W1C	0h	Interrupt Enable Clear Register for b1tcm0_bank1_pend
25	b1tcm0_bank0_enable_clr	R/W1C	0h	Interrupt Enable Clear Register for b1tcm0_bank0_pend
24	b0tcm0_bank1_enable_clr	R/W1C	0h	Interrupt Enable Clear Register for b0tcm0_bank1_pend
23	b0tcm0_bank0_enable_clr	R/W1C	0h	Interrupt Enable Clear Register for b0tcm0_bank0_pend
22	atcm0_bank1_enable_clr	R/W1C	0h	Interrupt Enable Clear Register for atcm0_bank1_pend
21	atcm0_bank0_enable_clr	R/W1C	0h	Interrupt Enable Clear Register for atcm0_bank0_pend
20	cpu0_ddata_ram7_enable_clr	R/W1C	0h	Interrupt Enable Clear Register for cpu0_ddata_ram7_pend
19	cpu0_ddata_ram6_enable_clr	R/W1C	0h	Interrupt Enable Clear Register for cpu0_ddata_ram6_pend
18	cpu0_ddata_ram5_enable_clr	R/W1C	0h	Interrupt Enable Clear Register for cpu0_ddata_ram5_pend
17	cpu0_ddata_ram4_enable_clr	R/W1C	0h	Interrupt Enable Clear Register for cpu0_ddata_ram4_pend
16	cpu0_ddata_ram3_enable_clr	R/W1C	0h	Interrupt Enable Clear Register for cpu0_ddata_ram3_pend
15	cpu0_ddata_ram2_enable_clr	R/W1C	0h	Interrupt Enable Clear Register for cpu0_ddata_ram2_pend
14	cpu0_ddata_ram1_enable_clr	R/W1C	0h	Interrupt Enable Clear Register for cpu0_ddata_ram1_pend

Copyright © 2025 Texas Instruments Incorporated

Table 11-1911. ded_enable_clr_reg0 Register Field Descriptions (continued)

Bit	Field	Type	Reset	Description
13	cpu0_ddata_ram0_enable_clr	R/W1C	0h	Interrupt Enable Clear Register for cpu0_ddata_ram0_pend
12	cpu0_ddirty_ram_enable_clr	R/W1C	0h	Interrupt Enable Clear Register for cpu0_ddirty_ram_pend
11	cpu0_dtag_ram3_enable_clr	R/W1C	0h	Interrupt Enable Clear Register for cpu0_dtag_ram3_pend
10	cpu0_dtag_ram2_enable_clr	R/W1C	0h	Interrupt Enable Clear Register for cpu0_dtag_ram2_pend
9	cpu0_dtag_ram1_enable_clr	R/W1C	0h	Interrupt Enable Clear Register for cpu0_dtag_ram1_pend
8	cpu0_dtag_ram0_enable_clr	R/W1C	0h	Interrupt Enable Clear Register for cpu0_dtag_ram0_pend
7	cpu0_idata_bank3_enable_clr	R/W1C	0h	Interrupt Enable Clear Register for cpu0_idata_bank3_pend
6	cpu0_idata_bank2_enable_clr	R/W1C	0h	Interrupt Enable Clear Register for cpu0_idata_bank2_pend
5	cpu0_idata_bank1_enable_clr	R/W1C	0h	Interrupt Enable Clear Register for cpu0_idata_bank1_pend
4	cpu0_idata_bank0_enable_clr	R/W1C	0h	Interrupt Enable Clear Register for cpu0_idata_bank0_pend
3	cpu0_itag_ram3_enable_clr	R/W1C	0h	Interrupt Enable Clear Register for cpu0_itag_ram3_pend
2	cpu0_itag_ram2_enable_clr	R/W1C	0h	Interrupt Enable Clear Register for cpu0_itag_ram2_pend
1	cpu0_itag_ram1_enable_clr	R/W1C	0h	Interrupt Enable Clear Register for cpu0_itag_ram1_pend
0	cpu0_itag_ram0_enable_clr	R/W1C	0h	Interrupt Enable Clear Register for cpu0_itag_ram0_pend

Copyright © 2025 Texas Instruments Incorporated

11.8.8.4.2.19 aggr_enable_set Register (Offset = 200h) [reset = X]

aggr_enable_set is shown in Figure 11-673 and described in Table 11-1912.

Return to the Table 11-1893.

AGGR interrupt enable set Register

Figure 11-673. aggr_enable_set Register

31	30	29	28	27	26	25	24
RESERVED							
R/W-X							
23	22	21	20	19	18	17	16
RESERVED							
R/W-X							
15	14	13	12	11	10	9	8
RESERVED							
R/W-X							
7	6	5	4	3	2	1	0
RESERVED						timeout	parity
R/W-X						R/W1S-0h	R/W1S-0h

Table 11-1912. aggr_enable_set Register Field Descriptions

Bit	Field	Type	Reset	Description
31-2	RESERVED	R/W	X	
1	timeout	R/W1S	0h	interrupt enable set for svbus timeout errors
0	parity	R/W1S	0h	interrupt enable set for parity errors

Copyright © 2025 Texas Instruments Incorporated

11.8.8.4.2.20 aggr_enable_clr Register (Offset = 204h) [reset = X]

aggr_enable_clr is shown in Figure 11-674 and described in Table 11-1913.

Return to the Table 11-1893.

AGGR interrupt enable clear Register

Figure 11-674. aggr_enable_clr Register

31	30	29	28	27	26	25	24
RESERVED							
R/W-X							
23	22	21	20	19	18	17	16
RESERVED							
R/W-X							
15	14	13	12	11	10	9	8
RESERVED							
R/W-X							
7	6	5	4	3	2	1	0
RESERVED						timeout	parity
R/W-X						R/W1C-0h	R/W1C-0h

Table 11-1913. aggr_enable_clr Register Field Descriptions

Bit	Field	Type	Reset	Description
31-2	RESERVED	R/W	X	
1	timeout	R/W1C	0h	interrupt enable clear for svbus timeout errors
0	parity	R/W1C	0h	interrupt enable clear for parity errors

Copyright © 2025 Texas Instruments Incorporated

11.8.8.4.2.21 aggr_status_set Register (Offset = 208h) [reset = X]

aggr_status_set is shown in Figure 11-675 and described in Table 11-1914.

Return to the Table 11-1893.

AGGR interrupt status set Register

Figure 11-675. aggr_status_set Register

31	30	29	28	27	26	25	24
RESERVED							
R/W-X							
23	22	21	20	19	18	17	16
RESERVED							
R/W-X							
15	14	13	12	11	10	9	8
RESERVED							
R/W-X							
7	6	5	4	3	2	1	0
RESERVED				timeout		parity	
R/W-X				R/Wincr-0h		R/Wincr-0h	

Table 11-1914. aggr_status_set Register Field Descriptions

Bit	Field	Type	Reset	Description
31-4	RESERVED	R/W	X	
3-2	timeout	R/Wincr	0h	interrupt status set for svbus timeout errors
1-0	parity	R/Wincr	0h	interrupt status set for parity errors

Copyright © 2025 Texas Instruments Incorporated

11.8.8.4.2.22 aggr_status_clr Register (Offset = 20Ch) [reset = X]

aggr_status_clr is shown in Figure 11-676 and described in Table 11-1915.

Return to the Table 11-1893.

AGGR interrupt status clear Register

Figure 11-676. aggr_status_clr Register

31	30	29	28	27	26	25	24
RESERVED							
R/W-X							
23	22	21	20	19	18	17	16
RESERVED							
R/W-X							
15	14	13	12	11	10	9	8
RESERVED							
R/W-X							
7	6	5	4	3	2	1	0
RESERVED				timeout		parity	
R/W-X				R/Wdecr-0h		R/Wdecr-0h	

Table 11-1915. aggr_status_clr Register Field Descriptions

Bit	Field	Type	Reset	Description
31-4	RESERVED	R/W	X	
3-2	timeout	R/Wdecr	0h	interrupt status clear for svbus timeout errors
1-0	parity	R/Wdecr	0h	interrupt status clear for parity errors

Copyright © 2025 Texas Instruments Incorporated

11.8.8.4.3 MSS_ECC_AGGB Registers

Table 11-1916 lists the MSS_ECC_AGGB registers. All register offset addresses not listed in Table 11-1916 should be considered as reserved locations and the register contents should not be modified.

Table 11-1916. MSS_ECC_AGGB Registers

Offset	Acronym	Register Name	Section
0h	rev	Aggregator Revision Register	Section 12.8.8.4.3.1
8h	vector	ECC Vector Register	Section 12.8.8.4.3.2
Ch	stat	Misc Status	Section 12.8.8.4.3.3
10h	wrap_rev	ECC Wrapper Revision Register	Section 12.8.8.4.3.4
14h	ctrl	ECC Control	Section 12.8.8.4.3.5
18h	err_ctrl1	ECC Error Control1 Register	Section 12.8.8.4.3.6
1Ch	err_ctrl2	ECC Error Control2 Register	Section 12.8.8.4.3.7
20h	err_stat1	ECC Error Status1 Register	Section 12.8.8.4.3.8
24h	err_stat2	ECC Error Status2 Register	Section 12.8.8.4.3.9
28h	err_stat3	ECC Error Status3 Register	Section 12.8.8.4.3.10
3Ch	sec_eoi_reg	EOI Register	Section 12.8.8.4.3.11
40h	sec_status_reg0	Interrupt Status Register 0	Section 12.8.8.4.3.12
80h	sec_enable_set_reg0	Interrupt Enable Set Register 0	Section 12.8.8.4.3.13
C0h	sec_enable_clr_reg0	Interrupt Enable Clear Register 0	Section 12.8.8.4.3.14
13Ch	ded_eoi_reg	EOI Register	Section 12.8.8.4.3.15
140h	ded_status_reg0	Interrupt Status Register 0	Section 12.8.8.4.3.16
180h	ded_enable_set_reg0	Interrupt Enable Set Register 0	Section 12.8.8.4.3.17
1C0h	ded_enable_clr_reg0	Interrupt Enable Clear Register 0	Section 12.8.8.4.3.18
200h	aggr_enable_set	AGGR interrupt enable set Register	Section 12.8.8.4.3.19
204h	aggr_enable_clr	AGGR interrupt enable clear Register	Section 12.8.8.4.3.20
208h	aggr_status_set	AGGR interrupt status set Register	Section 12.8.8.4.3.21
20Ch	aggr_status_clr	AGGR interrupt status clear Register	Section 12.8.8.4.3.22

Copyright © 2025 Texas Instruments Incorporated

11.8.8.4.3.1 rev Register (Offset = 0h) [reset = 66A0C200h]

rev is shown in Figure 11-677 and described in Table 11-1917.

Return to the Table 11-1916.

Revision parameters

Figure 11-677. rev Register

31	30	29	28	27	26	25	24	23	22	21	20	19	18	17	16
scheme		bu		module_id											
R-1h		R-2h		R-6A0h											
15	14	13	12	11	10	9	8	7	6	5	4	3	2	1	0
revrtl					revmaj			custom		revmin					
R-18h					R-2h			R-0h		R-0h					

Table 11-1917. rev Register Field Descriptions

Bit	Field	Type	Reset	Description
31-30	scheme	R	1h	Scheme
29-28	bu	R	2h	bu
27-16	module_id	R	6A0h	Module ID
15-11	revrtl	R	18h	RTL version
10-8	revmaj	R	2h	Major version
7-6	custom	R	0h	Custom version
5-0	revmin	R	0h	Minor version

Copyright © 2025 Texas Instruments Incorporated

11.8.8.4.3.2 vector Register (Offset = 8h) [reset = X]

vector is shown in Figure 11-678 and described in Table 11-1918.

Return to the Table 11-1916.

ECC Vector Register

Figure 11-678. vector Register

31	30	29	28	27	26	25	24
RESERVED							rd_svbus_done
R/W-X							R-0h
23	22	21	20	19	18	17	16
rd_svbus_address							
R/W-0h							
15	14	13	12	11	10	9	8
rd_svbus	RESERVED				ecc_vector		
R/W1S-0h	R/W-X				R/W-0h		
7	6	5	4	3	2	1	0
ecc_vector							
R/W-0h							

Table 11-1918. vector Register Field Descriptions

Bit	Field	Type	Reset	Description
31-25	RESERVED	R/W	X	
24	rd_svbus_done	R	0h	Status to indicate if read on serial VBUS is complete
23-16	rd_svbus_address	R/W	0h	Read address
15	rd_svbus	R/W1S	0h	Write 1 to trigger a read on the serial VBUS
14-11	RESERVED	R/W	X	
10-0	ecc_vector	R/W	0h	Value written to select the corresponding ECC RAM for control or status

Copyright © 2025 Texas Instruments Incorporated

11.8.8.4.3.3 stat Register (Offset = Ch) [reset = X]

stat is shown in Figure 11-679 and described in Table 11-1919.

Return to the Table 11-1916.

Misc Status

Figure 11-679. stat Register

31	30	29	28	27	26	25	24	23	22	21	20	19	18	17	16	15	14	13	12	11	10	9	8	7	6	5	4	3	2	1	0
RESERVED																					num_rams										
R-X																					R-1Ch										

Table 11-1919. stat Register Field Descriptions

Bit	Field	Type	Reset	Description
31-11	RESERVED	R	X	
10-0	num_rams	R	1Ch	Indicates the number of RAMS serviced by the ECC aggregator

Copyright © 2025 Texas Instruments Incorporated

11.8.8.4.3.4 wrap_rev Register (Offset = 10h) [reset = 66A40202h]

wrap_rev is shown in Figure 11-680 and described in Table 11-1920.

Return to the Table 11-1916.

Revision parameters

Figure 11-680. wrap_rev Register

31	30	29	28	27	26	25	24	23	22	21	20	19	18	17	16
scheme		bu		module_id											
R-1h		R-2h		R-6A4h											
15	14	13	12	11	10	9	8	7	6	5	4	3	2	1	0
revrtl					revmaj			custom		revmin					
R-0h					R-2h			R-0h		R-2h					

Table 11-1920. wrap_rev Register Field Descriptions

Bit	Field	Type	Reset	Description
31-30	scheme	R	1h	Scheme
29-28	bu	R	2h	bu
27-16	module_id	R	6A4h	Module ID
15-11	revrtl	R	0h	RTL version
10-8	revmaj	R	2h	Major version
7-6	custom	R	0h	Custom version
5-0	revmin	R	2h	Minor version

Copyright © 2025 Texas Instruments Incorporated

11.8.8.4.3.5 ctrl Register (Offset = 14h) [reset = X]

ctrl is shown in Figure 11-681 and described in Table 11-1921.

Return to the Table 11-1916.

ECC Control Register

Figure 11-681. ctrl Register

31	30	29	28	27	26	25	24
RESERVED							
R/W-X							
23	22	21	20	19	18	17	16
RESERVED							
R/W-X							
15	14	13	12	11	10	9	8
RESERVED							check_svbus_timeout
R/W-X							R/W-1h
7	6	5	4	3	2	1	0
check_parity	error_once	force_n_row	force_ded	force_sec	enable_rmw	ecc_check	ecc_enable
R/W-1h	R/W-0h	R/W-0h	R/W-0h	R/W-0h	R/W-1h	R/W-1h	R/W-1h

Table 11-1921. ctrl Register Field Descriptions

Bit	Field	Type	Reset	Description
31-9	RESERVED	R/W	X	
8	check_svbus_timeout	R/W	1h	check for svbus timeout errors
7	check_parity	R/W	1h	check for parity errors
6	error_once	R/W	0h	Force Error only once
5	force_n_row	R/W	0h	Force Error on any RAM read
4	force_ded	R/W	0h	Force Double Bit Error
3	force_sec	R/W	0h	Force Single Bit Error
2	enable_rmw	R/W	1h	Enable rmw
1	ecc_check	R/W	1h	Enable ECC check
0	ecc_enable	R/W	1h	Enable ECC

Copyright © 2025 Texas Instruments Incorporated

11.8.8.4.3.6 err_ctrl1 Register (Offset = 18h) [reset = 0h]

err_ctrl1 is shown in Figure 11-682 and described in Table 11-1922.

Return to the Table 11-1916.

ECC Error Control1 Register

Figure 11-682. err_ctrl1 Register

31	30	29	28	27	26	25	24	23	22	21	20	19	18	17	16	15	14	13	12	11	10	9	8	7	6	5	4	3	2	1	0
ecc_row																															
R/W-0h																															

Table 11-1922. err_ctrl1 Register Field Descriptions

Bit	Field	Type	Reset	Description
31-0	ecc_row	R/W	0h	Row address where single or double-bit error needs to be applied. This is ignored if force_n_row is set

Copyright © 2025 Texas Instruments Incorporated

11.8.8.4.3.7 err_ctrl2 Register (Offset = 1Ch) [reset = 0h]

err_ctrl2 is shown in Figure 11-683 and described in Table 11-1923.

Return to the Table 11-1916.

ECC Error Control2 Register

Figure 11-683. err_ctrl2 Register

31	30	29	28	27	26	25	24	23	22	21	20	19	18	17	16	15	14	13	12	11	10	9	8	7	6	5	4	3	2	1	0
ecc_bit2																ecc_bit1															
R/W-0h																R/W-0h															

Table 11-1923. err_ctrl2 Register Field Descriptions

Bit	Field	Type	Reset	Description
31-16	ecc_bit2	R/W	0h	Data bit that needs to be flipped if double bit error needs to be forced
15-0	ecc_bit1	R/W	0h	Data bit that needs to be flipped when force_sec is set

Copyright © 2025 Texas Instruments Incorporated

11.8.8.4.3.8 err_stat1 Register (Offset = 20h) [reset = 0h]

err_stat1 is shown in Figure 11-684 and described in Table 11-1924.

Return to the Table 11-1916.

ECC Error Status1 Register

Figure 11-684. err_stat1 Register

31	30	29	28	27	26	25	24
ecc_bit1							
R-0h							
23	22	21	20	19	18	17	16
ecc_bit1							
R-0h							
15	14	13	12	11	10	9	8
clr_ctrl_reg_err	clr_parity_err		clr_ecc_other	clr_ecc_ded		clr_ecc_sec	
R/W1C-0h	R/Wdecr-0h		R/W1C-0h	R/Wdecr-0h		R/Wdecr-0h	
7	6	5	4	3	2	1	0
ctr_reg_err	parity_err		ecc_other	ecc_ded		ecc_sec	
R/W1S-0h	R/W1S-0h		R/W1S-0h	R/Wincr-0h		R/Wincr-0h	

Table 11-1924. err_stat1 Register Field Descriptions

Bit	Field	Type	Reset	Description
31-16	ecc_bit1	R	0h	Data bit that corresponds to the single-bit error
15	clr_ctrl_reg_err	R/W1C	0h	Clear control reg error Error Status, you must also re write the contorl ergister itself to clear this
14-13	clr_parity_err	R/Wdecr	0h	Clear parity Error Status
12	clr_ecc_other	R/W1C	0h	Clear other Error Status
11-10	clr_ecc_ded	R/Wdecr	0h	Clear Double Bit Error Status
9-8	clr_ecc_sec	R/Wdecr	0h	Clear Single Bit Error Status
7	ctr_reg_err	R/W1S	0h	control register error pending, Level interrupt
6-5	parity_err	R/W1S	0h	Level parity error Error Status
4	ecc_other	R/W1S	0h	successive single-bit errors have occurred while a writeback is still pending, Level interrupt
3-2	ecc_ded	R/Wincr	0h	Level Double Bit Error Status
1-0	ecc_sec	R/Wincr	0h	Level Single Bit Error Status

Copyright © 2025 Texas Instruments Incorporated

11.8.8.4.3.9 err_stat2 Register (Offset = 24h) [reset = 0h]

err_stat2 is shown in Figure 11-685 and described in Table 11-1925.

Return to the Table 11-1916.

ECC Error Status2 Register

Figure 11-685. err_stat2 Register

31	30	29	28	27	26	25	24	23	22	21	20	19	18	17	16	15	14	13	12	11	10	9	8	7	6	5	4	3	2	1	0
ecc_row																															
R-0h																															

Table 11-1925. err_stat2 Register Field Descriptions

Bit	Field	Type	Reset	Description
31-0	ecc_row	R	0h	Row address where the single or double-bit error has occurred

Copyright © 2025 Texas Instruments Incorporated

11.8.8.4.3.10 err_stat3 Register (Offset = 28h) [reset = X]

err_stat3 is shown in Figure 11-686 and described in Table 11-1926.

Return to the Table 11-1916.

ECC Error Status3 Register

Figure 11-686. err_stat3 Register

31	30	29	28	27	26	25	24
RESERVED							
R/W-X							
23	22	21	20	19	18	17	16
RESERVED							
R/W-X							
15	14	13	12	11	10	9	8
RESERVED						clr_svbus_timeout_err	RESERVED
R/W-X						R/W1C-0h	R/W-X
7	6	5	4	3	2	1	0
RESERVED						svbus_timeout_err	wb_pend
R/W-X						R/W1S-0h	R-0h

Table 11-1926. err_stat3 Register Field Descriptions

Bit	Field	Type	Reset	Description
31-10	RESERVED	R/W	X	
9	clr_svbus_timeout_err	R/W1C	0h	Clear svbus timeout Error Status
8-2	RESERVED	R/W	X	
1	svbus_timeout_err	R/W1S	0h	Level svbus timeout error Error Status
0	wb_pend	R	0h	delayed write back pending Status

Copyright © 2025 Texas Instruments Incorporated

11.8.8.4.3.11 sec_eoi_reg Register (Offset = 3Ch) [reset = X]

sec_eoi_reg is shown in Figure 11-687 and described in Table 11-1927.

Return to the Table 11-1916.

EOI Register

Figure 11-687. sec_eoi_reg Register

31	30	29	28	27	26	25	24
RESERVED							
R/W-X							
23	22	21	20	19	18	17	16
RESERVED							
R/W-X							
15	14	13	12	11	10	9	8
RESERVED							
R/W-X							
7	6	5	4	3	2	1	0
RESERVED							eoi_wr
R/W-X							R/W1S-0h

Table 11-1927. sec_eoi_reg Register Field Descriptions

Bit	Field	Type	Reset	Description
31-1	RESERVED	R/W	X	
0	eoi_wr	R/W1S	0h	EOI Register

Copyright © 2025 Texas Instruments Incorporated

11.8.8.4.3.12 sec_status_reg0 Register (Offset = 40h) [reset = X]

sec_status_reg0 is shown in Figure 11-688 and described in Table 11-1928.

Return to the Table 11-1916.

Interrupt Status Register 0

Figure 11-688. sec_status_reg0 Register

31	30	29	28	27	26	25	24
RESERVED				cpu1_ks_vim_ramecc_pend	b1tcm1_bank1_pend	b1tcm1_bank0_pend	b0tcm1_bank1_pend
R/W-X				R/W1S-0h	R/W1S-0h	R/W1S-0h	R/W1S-0h
23	22	21	20	19	18	17	16
b0tcm1_bank0_pend	atcm1_bank1_pend	atcm1_bank0_pend	cpu1_ddata_ram7_pend	cpu1_ddata_ram6_pend	cpu1_ddata_ram5_pend	cpu1_ddata_ram4_pend	cpu1_ddata_ram3_pend
R/W1S-0h	R/W1S-0h	R/W1S-0h	R/W1S-0h	R/W1S-0h	R/W1S-0h	R/W1S-0h	R/W1S-0h
15	14	13	12	11	10	9	8
cpu1_ddata_ram2_pend	cpu1_ddata_ram1_pend	cpu1_ddata_ram0_pend	cpu1_ddirty_ram_pend	cpu1_dtag_ram3_pend	cpu1_dtag_ram2_pend	cpu1_dtag_ram1_pend	cpu1_dtag_ram0_pend
R/W1S-0h	R/W1S-0h	R/W1S-0h	R/W1S-0h	R/W1S-0h	R/W1S-0h	R/W1S-0h	R/W1S-0h
7	6	5	4	3	2	1	0
cpu1_idata_bank3_pend	cpu1_idata_bank2_pend	cpu1_idata_bank1_pend	cpu1_idata_bank0_pend	cpu1_itag_ram3_pend	cpu1_itag_ram2_pend	cpu1_itag_ram1_pend	cpu1_itag_ram0_pend
R/W1S-0h	R/W1S-0h	R/W1S-0h	R/W1S-0h	R/W1S-0h	R/W1S-0h	R/W1S-0h	R/W1S-0h

Table 11-1928. sec_status_reg0 Register Field Descriptions

Bit	Field	Type	Reset	Description
31-28	RESERVED	R/W	X	
27	cpu1_ks_vim_ramecc_pend	R/W1S	0h	Interrupt Pending Status for cpu1_ks_vim_ramecc_pend
26	b1tcm1_bank1_pend	R/W1S	0h	Interrupt Pending Status for b1tcm1_bank1_pend
25	b1tcm1_bank0_pend	R/W1S	0h	Interrupt Pending Status for b1tcm1_bank0_pend
24	b0tcm1_bank1_pend	R/W1S	0h	Interrupt Pending Status for b0tcm1_bank1_pend
23	b0tcm1_bank0_pend	R/W1S	0h	Interrupt Pending Status for b0tcm1_bank0_pend
22	atcm1_bank1_pend	R/W1S	0h	Interrupt Pending Status for atcm1_bank1_pend
21	atcm1_bank0_pend	R/W1S	0h	Interrupt Pending Status for atcm1_bank0_pend
20	cpu1_ddata_ram7_pend	R/W1S	0h	Interrupt Pending Status for cpu1_ddata_ram7_pend
19	cpu1_ddata_ram6_pend	R/W1S	0h	Interrupt Pending Status for cpu1_ddata_ram6_pend
18	cpu1_ddata_ram5_pend	R/W1S	0h	Interrupt Pending Status for cpu1_ddata_ram5_pend
17	cpu1_ddata_ram4_pend	R/W1S	0h	Interrupt Pending Status for cpu1_ddata_ram4_pend
16	cpu1_ddata_ram3_pend	R/W1S	0h	Interrupt Pending Status for cpu1_ddata_ram3_pend
15	cpu1_ddata_ram2_pend	R/W1S	0h	Interrupt Pending Status for cpu1_ddata_ram2_pend
14	cpu1_ddata_ram1_pend	R/W1S	0h	Interrupt Pending Status for cpu1_ddata_ram1_pend
13	cpu1_ddata_ram0_pend	R/W1S	0h	Interrupt Pending Status for cpu1_ddata_ram0_pend
12	cpu1_ddirty_ram_pend	R/W1S	0h	Interrupt Pending Status for cpu1_ddirty_ram_pend
11	cpu1_dtag_ram3_pend	R/W1S	0h	Interrupt Pending Status for cpu1_dtag_ram3_pend
10	cpu1_dtag_ram2_pend	R/W1S	0h	Interrupt Pending Status for cpu1_dtag_ram2_pend

Copyright © 2025 Texas Instruments Incorporated

Table 11-1928. sec_status_reg0 Register Field Descriptions (continued)

Bit	Field	Type	Reset	Description
9	cpu1_dtag_ram1_pend	R/W1S	0h	Interrupt Pending Status for cpu1_dtag_ram1_pend
8	cpu1_dtag_ram0_pend	R/W1S	0h	Interrupt Pending Status for cpu1_dtag_ram0_pend
7	cpu1_idata_bank3_pend	R/W1S	0h	Interrupt Pending Status for cpu1_idata_bank3_pend
6	cpu1_idata_bank2_pend	R/W1S	0h	Interrupt Pending Status for cpu1_idata_bank2_pend
5	cpu1_idata_bank1_pend	R/W1S	0h	Interrupt Pending Status for cpu1_idata_bank1_pend
4	cpu1_idata_bank0_pend	R/W1S	0h	Interrupt Pending Status for cpu1_idata_bank0_pend
3	cpu1_itag_ram3_pend	R/W1S	0h	Interrupt Pending Status for cpu1_itag_ram3_pend
2	cpu1_itag_ram2_pend	R/W1S	0h	Interrupt Pending Status for cpu1_itag_ram2_pend
1	cpu1_itag_ram1_pend	R/W1S	0h	Interrupt Pending Status for cpu1_itag_ram1_pend
0	cpu1_itag_ram0_pend	R/W1S	0h	Interrupt Pending Status for cpu1_itag_ram0_pend

Copyright © 2025 Texas Instruments Incorporated

11.8.8.4.3.13 sec_enable_set_reg0 Register (Offset = 80h) [reset = X]

sec_enable_set_reg0 is shown in Figure 11-689 and described in Table 11-1929.

Return to the Table 11-1916.

Interrupt Enable Set Register 0

Figure 11-689. sec_enable_set_reg0 Register

31	30	29	28	27	26	25	24
RESERVED				cpu1_ks_vim_ramecc_enable_set	b1tcm1_bank1_enable_set	b1tcm1_bank0_enable_set	b0tcm1_bank1_enable_set
R/W-X				R/W1S-0h	R/W1S-0h	R/W1S-0h	R/W1S-0h
23	22	21	20	19	18	17	16
b0tcm1_bank0_enable_set	atcm1_bank1_enable_set	atcm1_bank0_enable_set	cpu1_ddata_ram7_enable_set	cpu1_ddata_ram6_enable_set	cpu1_ddata_ram5_enable_set	cpu1_ddata_ram4_enable_set	cpu1_ddata_ram3_enable_set
R/W1S-0h	R/W1S-0h	R/W1S-0h	R/W1S-0h	R/W1S-0h	R/W1S-0h	R/W1S-0h	R/W1S-0h
15	14	13	12	11	10	9	8
cpu1_ddata_ram2_enable_set	cpu1_ddata_ram1_enable_set	cpu1_ddata_ram0_enable_set	cpu1_ddirty_ram_enable_set	cpu1_dtag_ram3_enable_set	cpu1_dtag_ram2_enable_set	cpu1_dtag_ram1_enable_set	cpu1_dtag_ram0_enable_set
R/W1S-0h	R/W1S-0h	R/W1S-0h	R/W1S-0h	R/W1S-0h	R/W1S-0h	R/W1S-0h	R/W1S-0h
7	6	5	4	3	2	1	0
cpu1_idata_bank3_enable_set	cpu1_idata_bank2_enable_set	cpu1_idata_bank1_enable_set	cpu1_idata_bank0_enable_set	cpu1_itag_ram3_enable_set	cpu1_itag_ram2_enable_set	cpu1_itag_ram1_enable_set	cpu1_itag_ram0_enable_set
R/W1S-0h	R/W1S-0h	R/W1S-0h	R/W1S-0h	R/W1S-0h	R/W1S-0h	R/W1S-0h	R/W1S-0h

Table 11-1929. sec_enable_set_reg0 Register Field Descriptions

Bit	Field	Type	Reset	Description
31-28	RESERVED	R/W	X	
27	cpu1_ks_vim_ramecc_enable_set	R/W1S	0h	Interrupt Enable Set Register for cpu1_ks_vim_ramecc_pend
26	b1tcm1_bank1_enable_set	R/W1S	0h	Interrupt Enable Set Register for b1tcm1_bank1_pend
25	b1tcm1_bank0_enable_set	R/W1S	0h	Interrupt Enable Set Register for b1tcm1_bank0_pend
24	b0tcm1_bank1_enable_set	R/W1S	0h	Interrupt Enable Set Register for b0tcm1_bank1_pend
23	b0tcm1_bank0_enable_set	R/W1S	0h	Interrupt Enable Set Register for b0tcm1_bank0_pend
22	atcm1_bank1_enable_set	R/W1S	0h	Interrupt Enable Set Register for atcm1_bank1_pend
21	atcm1_bank0_enable_set	R/W1S	0h	Interrupt Enable Set Register for atcm1_bank0_pend
20	cpu1_ddata_ram7_enable_set	R/W1S	0h	Interrupt Enable Set Register for cpu1_ddata_ram7_pend
19	cpu1_ddata_ram6_enable_set	R/W1S	0h	Interrupt Enable Set Register for cpu1_ddata_ram6_pend
18	cpu1_ddata_ram5_enable_set	R/W1S	0h	Interrupt Enable Set Register for cpu1_ddata_ram5_pend
17	cpu1_ddata_ram4_enable_set	R/W1S	0h	Interrupt Enable Set Register for cpu1_ddata_ram4_pend
16	cpu1_ddata_ram3_enable_set	R/W1S	0h	Interrupt Enable Set Register for cpu1_ddata_ram3_pend
15	cpu1_ddata_ram2_enable_set	R/W1S	0h	Interrupt Enable Set Register for cpu1_ddata_ram2_pend

Copyright © 2025 Texas Instruments Incorporated

Table 11-1929. sec_enable_set_reg0 Register Field Descriptions (continued)

Bit	Field	Type	Reset	Description
14	cpu1_ddata_ram1_enable_set	R/W1S	0h	Interrupt Enable Set Register for cpu1_ddata_ram1_pend
13	cpu1_ddata_ram0_enable_set	R/W1S	0h	Interrupt Enable Set Register for cpu1_ddata_ram0_pend
12	cpu1_ddirty_ram_enable_set	R/W1S	0h	Interrupt Enable Set Register for cpu1_ddirty_ram_pend
11	cpu1_dtag_ram3_enable_set	R/W1S	0h	Interrupt Enable Set Register for cpu1_dtag_ram3_pend
10	cpu1_dtag_ram2_enable_set	R/W1S	0h	Interrupt Enable Set Register for cpu1_dtag_ram2_pend
9	cpu1_dtag_ram1_enable_set	R/W1S	0h	Interrupt Enable Set Register for cpu1_dtag_ram1_pend
8	cpu1_dtag_ram0_enable_set	R/W1S	0h	Interrupt Enable Set Register for cpu1_dtag_ram0_pend
7	cpu1_idata_bank3_enable_set	R/W1S	0h	Interrupt Enable Set Register for cpu1_idata_bank3_pend
6	cpu1_idata_bank2_enable_set	R/W1S	0h	Interrupt Enable Set Register for cpu1_idata_bank2_pend
5	cpu1_idata_bank1_enable_set	R/W1S	0h	Interrupt Enable Set Register for cpu1_idata_bank1_pend
4	cpu1_idata_bank0_enable_set	R/W1S	0h	Interrupt Enable Set Register for cpu1_idata_bank0_pend
3	cpu1_itag_ram3_enable_set	R/W1S	0h	Interrupt Enable Set Register for cpu1_itag_ram3_pend
2	cpu1_itag_ram2_enable_set	R/W1S	0h	Interrupt Enable Set Register for cpu1_itag_ram2_pend
1	cpu1_itag_ram1_enable_set	R/W1S	0h	Interrupt Enable Set Register for cpu1_itag_ram1_pend
0	cpu1_itag_ram0_enable_set	R/W1S	0h	Interrupt Enable Set Register for cpu1_itag_ram0_pend

Copyright © 2025 Texas Instruments Incorporated

11.8.8.4.3.14 sec_enable_clr_reg0 Register (Offset = C0h) [reset = X]

sec_enable_clr_reg0 is shown in Figure 11-690 and described in Table 11-1930.

Return to the Table 11-1916.

Interrupt Enable Clear Register 0

Figure 11-690. sec_enable_clr_reg0 Register

31	30	29	28	27	26	25	24
RESERVED				cpu1_ks_vim_ramecc_enable_clr	b1tcm1_bank1_enable_clr	b1tcm1_bank0_enable_clr	b0tcm1_bank1_enable_clr
R/W-X				R/W1C-0h	R/W1C-0h	R/W1C-0h	R/W1C-0h
23	22	21	20	19	18	17	16
b0tcm1_bank0_enable_clr	atcm1_bank1_enable_clr	atcm1_bank0_enable_clr	cpu1_ddata_ram7_enable_clr	cpu1_ddata_ram6_enable_clr	cpu1_ddata_ram5_enable_clr	cpu1_ddata_ram4_enable_clr	cpu1_ddata_ram3_enable_clr
R/W1C-0h	R/W1C-0h	R/W1C-0h	R/W1C-0h	R/W1C-0h	R/W1C-0h	R/W1C-0h	R/W1C-0h
15	14	13	12	11	10	9	8
cpu1_ddata_ram2_enable_clr	cpu1_ddata_ram1_enable_clr	cpu1_ddata_ram0_enable_clr	cpu1_ddirty_ram_enable_clr	cpu1_dtag_ram3_enable_clr	cpu1_dtag_ram2_enable_clr	cpu1_dtag_ram1_enable_clr	cpu1_dtag_ram0_enable_clr
R/W1C-0h	R/W1C-0h	R/W1C-0h	R/W1C-0h	R/W1C-0h	R/W1C-0h	R/W1C-0h	R/W1C-0h
7	6	5	4	3	2	1	0
cpu1_idata_bank3_enable_clr	cpu1_idata_bank2_enable_clr	cpu1_idata_bank1_enable_clr	cpu1_idata_bank0_enable_clr	cpu1_itag_ram3_enable_clr	cpu1_itag_ram2_enable_clr	cpu1_itag_ram1_enable_clr	cpu1_itag_ram0_enable_clr
R/W1C-0h	R/W1C-0h	R/W1C-0h	R/W1C-0h	R/W1C-0h	R/W1C-0h	R/W1C-0h	R/W1C-0h

Table 11-1930. sec_enable_clr_reg0 Register Field Descriptions

Bit	Field	Type	Reset	Description
31-28	RESERVED	R/W	X	
27	cpu1_ks_vim_ramecc_enable_clr	R/W1C	0h	Interrupt Enable Clear Register for cpu1_ks_vim_ramecc_pend
26	b1tcm1_bank1_enable_clr	R/W1C	0h	Interrupt Enable Clear Register for b1tcm1_bank1_pend
25	b1tcm1_bank0_enable_clr	R/W1C	0h	Interrupt Enable Clear Register for b1tcm1_bank0_pend
24	b0tcm1_bank1_enable_clr	R/W1C	0h	Interrupt Enable Clear Register for b0tcm1_bank1_pend
23	b0tcm1_bank0_enable_clr	R/W1C	0h	Interrupt Enable Clear Register for b0tcm1_bank0_pend
22	atcm1_bank1_enable_clr	R/W1C	0h	Interrupt Enable Clear Register for atcm1_bank1_pend
21	atcm1_bank0_enable_clr	R/W1C	0h	Interrupt Enable Clear Register for atcm1_bank0_pend
20	cpu1_ddata_ram7_enable_clr	R/W1C	0h	Interrupt Enable Clear Register for cpu1_ddata_ram7_pend
19	cpu1_ddata_ram6_enable_clr	R/W1C	0h	Interrupt Enable Clear Register for cpu1_ddata_ram6_pend
18	cpu1_ddata_ram5_enable_clr	R/W1C	0h	Interrupt Enable Clear Register for cpu1_ddata_ram5_pend
17	cpu1_ddata_ram4_enable_clr	R/W1C	0h	Interrupt Enable Clear Register for cpu1_ddata_ram4_pend
16	cpu1_ddata_ram3_enable_clr	R/W1C	0h	Interrupt Enable Clear Register for cpu1_ddata_ram3_pend
15	cpu1_ddata_ram2_enable_clr	R/W1C	0h	Interrupt Enable Clear Register for cpu1_ddata_ram2_pend
14	cpu1_ddata_ram1_enable_clr	R/W1C	0h	Interrupt Enable Clear Register for cpu1_ddata_ram1_pend

Copyright © 2025 Texas Instruments Incorporated

Table 11-1930. sec_enable_clr_reg0 Register Field Descriptions (continued)

Bit	Field	Type	Reset	Description
13	cpu1_ddata_ram0_enable_clr	R/W1C	0h	Interrupt Enable Clear Register for cpu1_ddata_ram0_pend
12	cpu1_ddirty_ram_enable_clr	R/W1C	0h	Interrupt Enable Clear Register for cpu1_ddirty_ram_pend
11	cpu1_dtag_ram3_enable_clr	R/W1C	0h	Interrupt Enable Clear Register for cpu1_dtag_ram3_pend
10	cpu1_dtag_ram2_enable_clr	R/W1C	0h	Interrupt Enable Clear Register for cpu1_dtag_ram2_pend
9	cpu1_dtag_ram1_enable_clr	R/W1C	0h	Interrupt Enable Clear Register for cpu1_dtag_ram1_pend
8	cpu1_dtag_ram0_enable_clr	R/W1C	0h	Interrupt Enable Clear Register for cpu1_dtag_ram0_pend
7	cpu1_idata_bank3_enable_clr	R/W1C	0h	Interrupt Enable Clear Register for cpu1_idata_bank3_pend
6	cpu1_idata_bank2_enable_clr	R/W1C	0h	Interrupt Enable Clear Register for cpu1_idata_bank2_pend
5	cpu1_idata_bank1_enable_clr	R/W1C	0h	Interrupt Enable Clear Register for cpu1_idata_bank1_pend
4	cpu1_idata_bank0_enable_clr	R/W1C	0h	Interrupt Enable Clear Register for cpu1_idata_bank0_pend
3	cpu1_itag_ram3_enable_clr	R/W1C	0h	Interrupt Enable Clear Register for cpu1_itag_ram3_pend
2	cpu1_itag_ram2_enable_clr	R/W1C	0h	Interrupt Enable Clear Register for cpu1_itag_ram2_pend
1	cpu1_itag_ram1_enable_clr	R/W1C	0h	Interrupt Enable Clear Register for cpu1_itag_ram1_pend
0	cpu1_itag_ram0_enable_clr	R/W1C	0h	Interrupt Enable Clear Register for cpu1_itag_ram0_pend

Copyright © 2025 Texas Instruments Incorporated

11.8.8.4.3.15 ded_eoi_reg Register (Offset = 13Ch) [reset = X]

ded_eoi_reg is shown in Figure 11-691 and described in Table 11-1931.

Return to the Table 11-1916.

EOI Register

Figure 11-691. ded_eoi_reg Register

31	30	29	28	27	26	25	24
RESERVED							
R/W-X							
23	22	21	20	19	18	17	16
RESERVED							
R/W-X							
15	14	13	12	11	10	9	8
RESERVED							
R/W-X							
7	6	5	4	3	2	1	0
RESERVED							eoi_wr
R/W-X							R/W1S-0h

Table 11-1931. ded_eoi_reg Register Field Descriptions

Bit	Field	Type	Reset	Description
31-1	RESERVED	R/W	X	
0	eoi_wr	R/W1S	0h	EOI Register

Copyright © 2025 Texas Instruments Incorporated

11.8.8.4.3.16 ded_status_reg0 Register (Offset = 140h) [reset = X]

ded_status_reg0 is shown in Figure 11-692 and described in Table 11-1932.

Return to the Table 11-1916.

Interrupt Status Register 0

Figure 11-692. ded_status_reg0 Register

31	30	29	28	27	26	25	24
RESERVED				cpu1_ks_vim_ramecc_pend	b1tcm1_bank1_pend	b1tcm1_bank0_pend	b0tcm1_bank1_pend
R/W-X				R/W1S-0h	R/W1S-0h	R/W1S-0h	R/W1S-0h
23	22	21	20	19	18	17	16
b0tcm1_bank0_pend	atcm1_bank1_pend	atcm1_bank0_pend	cpu1_ddata_ram7_pend	cpu1_ddata_ram6_pend	cpu1_ddata_ram5_pend	cpu1_ddata_ram4_pend	cpu1_ddata_ram3_pend
R/W1S-0h	R/W1S-0h	R/W1S-0h	R/W1S-0h	R/W1S-0h	R/W1S-0h	R/W1S-0h	R/W1S-0h
15	14	13	12	11	10	9	8
cpu1_ddata_ram2_pend	cpu1_ddata_ram1_pend	cpu1_ddata_ram0_pend	cpu1_ddirty_ram_pend	cpu1_dtag_ram3_pend	cpu1_dtag_ram2_pend	cpu1_dtag_ram1_pend	cpu1_dtag_ram0_pend
R/W1S-0h	R/W1S-0h	R/W1S-0h	R/W1S-0h	R/W1S-0h	R/W1S-0h	R/W1S-0h	R/W1S-0h
7	6	5	4	3	2	1	0
cpu1_idata_bank3_pend	cpu1_idata_bank2_pend	cpu1_idata_bank1_pend	cpu1_idata_bank0_pend	cpu1_itag_ram3_pend	cpu1_itag_ram2_pend	cpu1_itag_ram1_pend	cpu1_itag_ram0_pend
R/W1S-0h	R/W1S-0h	R/W1S-0h	R/W1S-0h	R/W1S-0h	R/W1S-0h	R/W1S-0h	R/W1S-0h

Table 11-1932. ded_status_reg0 Register Field Descriptions

Bit	Field	Type	Reset	Description
31-28	RESERVED	R/W	X	
27	cpu1_ks_vim_ramecc_pend	R/W1S	0h	Interrupt Pending Status for cpu1_ks_vim_ramecc_pend
26	b1tcm1_bank1_pend	R/W1S	0h	Interrupt Pending Status for b1tcm1_bank1_pend
25	b1tcm1_bank0_pend	R/W1S	0h	Interrupt Pending Status for b1tcm1_bank0_pend
24	b0tcm1_bank1_pend	R/W1S	0h	Interrupt Pending Status for b0tcm1_bank1_pend
23	b0tcm1_bank0_pend	R/W1S	0h	Interrupt Pending Status for b0tcm1_bank0_pend
22	atcm1_bank1_pend	R/W1S	0h	Interrupt Pending Status for atcm1_bank1_pend
21	atcm1_bank0_pend	R/W1S	0h	Interrupt Pending Status for atcm1_bank0_pend
20	cpu1_ddata_ram7_pend	R/W1S	0h	Interrupt Pending Status for cpu1_ddata_ram7_pend
19	cpu1_ddata_ram6_pend	R/W1S	0h	Interrupt Pending Status for cpu1_ddata_ram6_pend
18	cpu1_ddata_ram5_pend	R/W1S	0h	Interrupt Pending Status for cpu1_ddata_ram5_pend
17	cpu1_ddata_ram4_pend	R/W1S	0h	Interrupt Pending Status for cpu1_ddata_ram4_pend
16	cpu1_ddata_ram3_pend	R/W1S	0h	Interrupt Pending Status for cpu1_ddata_ram3_pend
15	cpu1_ddata_ram2_pend	R/W1S	0h	Interrupt Pending Status for cpu1_ddata_ram2_pend
14	cpu1_ddata_ram1_pend	R/W1S	0h	Interrupt Pending Status for cpu1_ddata_ram1_pend
13	cpu1_ddata_ram0_pend	R/W1S	0h	Interrupt Pending Status for cpu1_ddata_ram0_pend
12	cpu1_ddirty_ram_pend	R/W1S	0h	Interrupt Pending Status for cpu1_ddirty_ram_pend
11	cpu1_dtag_ram3_pend	R/W1S	0h	Interrupt Pending Status for cpu1_dtag_ram3_pend
10	cpu1_dtag_ram2_pend	R/W1S	0h	Interrupt Pending Status for cpu1_dtag_ram2_pend

Copyright © 2025 Texas Instruments Incorporated

Table 11-1932. ded_status_reg0 Register Field Descriptions (continued)

Bit	Field	Type	Reset	Description
9	cpu1_dtag_ram1_pend	R/W1S	0h	Interrupt Pending Status for cpu1_dtag_ram1_pend
8	cpu1_dtag_ram0_pend	R/W1S	0h	Interrupt Pending Status for cpu1_dtag_ram0_pend
7	cpu1_idata_bank3_pend	R/W1S	0h	Interrupt Pending Status for cpu1_idata_bank3_pend
6	cpu1_idata_bank2_pend	R/W1S	0h	Interrupt Pending Status for cpu1_idata_bank2_pend
5	cpu1_idata_bank1_pend	R/W1S	0h	Interrupt Pending Status for cpu1_idata_bank1_pend
4	cpu1_idata_bank0_pend	R/W1S	0h	Interrupt Pending Status for cpu1_idata_bank0_pend
3	cpu1_itag_ram3_pend	R/W1S	0h	Interrupt Pending Status for cpu1_itag_ram3_pend
2	cpu1_itag_ram2_pend	R/W1S	0h	Interrupt Pending Status for cpu1_itag_ram2_pend
1	cpu1_itag_ram1_pend	R/W1S	0h	Interrupt Pending Status for cpu1_itag_ram1_pend
0	cpu1_itag_ram0_pend	R/W1S	0h	Interrupt Pending Status for cpu1_itag_ram0_pend

Copyright © 2025 Texas Instruments Incorporated

11.8.8.4.3.17 ded_enable_set_reg0 Register (Offset = 180h) [reset = X]

ded_enable_set_reg0 is shown in Figure 11-693 and described in Table 11-1933.

Return to the Table 11-1916.

Interrupt Enable Set Register 0

Figure 11-693. ded_enable_set_reg0 Register

31	30	29	28	27	26	25	24
RESERVED				cpu1_ks_vim_ramecc_enable_set	b1tcm1_bank1_enable_set	b1tcm1_bank0_enable_set	b0tcm1_bank1_enable_set
R/W-X				R/W1S-0h	R/W1S-0h	R/W1S-0h	R/W1S-0h
23	22	21	20	19	18	17	16
b0tcm1_bank0_enable_set	atcm1_bank1_enable_set	atcm1_bank0_enable_set	cpu1_ddata_ram7_enable_set	cpu1_ddata_ram6_enable_set	cpu1_ddata_ram5_enable_set	cpu1_ddata_ram4_enable_set	cpu1_ddata_ram3_enable_set
R/W1S-0h	R/W1S-0h	R/W1S-0h	R/W1S-0h	R/W1S-0h	R/W1S-0h	R/W1S-0h	R/W1S-0h
15	14	13	12	11	10	9	8
cpu1_ddata_ram2_enable_set	cpu1_ddata_ram1_enable_set	cpu1_ddata_ram0_enable_set	cpu1_ddirty_ram_enable_set	cpu1_dtag_ram3_enable_set	cpu1_dtag_ram2_enable_set	cpu1_dtag_ram1_enable_set	cpu1_dtag_ram0_enable_set
R/W1S-0h	R/W1S-0h	R/W1S-0h	R/W1S-0h	R/W1S-0h	R/W1S-0h	R/W1S-0h	R/W1S-0h
7	6	5	4	3	2	1	0
cpu1_idata_bank3_enable_set	cpu1_idata_bank2_enable_set	cpu1_idata_bank1_enable_set	cpu1_idata_bank0_enable_set	cpu1_itag_ram3_enable_set	cpu1_itag_ram2_enable_set	cpu1_itag_ram1_enable_set	cpu1_itag_ram0_enable_set
R/W1S-0h	R/W1S-0h	R/W1S-0h	R/W1S-0h	R/W1S-0h	R/W1S-0h	R/W1S-0h	R/W1S-0h

Table 11-1933. ded_enable_set_reg0 Register Field Descriptions

Bit	Field	Type	Reset	Description
31-28	RESERVED	R/W	X	
27	cpu1_ks_vim_ramecc_enable_set	R/W1S	0h	Interrupt Enable Set Register for cpu1_ks_vim_ramecc_pend
26	b1tcm1_bank1_enable_set	R/W1S	0h	Interrupt Enable Set Register for b1tcm1_bank1_pend
25	b1tcm1_bank0_enable_set	R/W1S	0h	Interrupt Enable Set Register for b1tcm1_bank0_pend
24	b0tcm1_bank1_enable_set	R/W1S	0h	Interrupt Enable Set Register for b0tcm1_bank1_pend
23	b0tcm1_bank0_enable_set	R/W1S	0h	Interrupt Enable Set Register for b0tcm1_bank0_pend
22	atcm1_bank1_enable_set	R/W1S	0h	Interrupt Enable Set Register for atcm1_bank1_pend
21	atcm1_bank0_enable_set	R/W1S	0h	Interrupt Enable Set Register for atcm1_bank0_pend
20	cpu1_ddata_ram7_enable_set	R/W1S	0h	Interrupt Enable Set Register for cpu1_ddata_ram7_pend
19	cpu1_ddata_ram6_enable_set	R/W1S	0h	Interrupt Enable Set Register for cpu1_ddata_ram6_pend
18	cpu1_ddata_ram5_enable_set	R/W1S	0h	Interrupt Enable Set Register for cpu1_ddata_ram5_pend
17	cpu1_ddata_ram4_enable_set	R/W1S	0h	Interrupt Enable Set Register for cpu1_ddata_ram4_pend
16	cpu1_ddata_ram3_enable_set	R/W1S	0h	Interrupt Enable Set Register for cpu1_ddata_ram3_pend
15	cpu1_ddata_ram2_enable_set	R/W1S	0h	Interrupt Enable Set Register for cpu1_ddata_ram2_pend

Copyright © 2025 Texas Instruments Incorporated

Table 11-1933. ded_enable_set_reg0 Register Field Descriptions (continued)

Bit	Field	Type	Reset	Description
14	cpu1_ddata_ram1_enable_set	R/W1S	0h	Interrupt Enable Set Register for cpu1_ddata_ram1_pend
13	cpu1_ddata_ram0_enable_set	R/W1S	0h	Interrupt Enable Set Register for cpu1_ddata_ram0_pend
12	cpu1_ddirty_ram_enable_set	R/W1S	0h	Interrupt Enable Set Register for cpu1_ddirty_ram_pend
11	cpu1_dtag_ram3_enable_set	R/W1S	0h	Interrupt Enable Set Register for cpu1_dtag_ram3_pend
10	cpu1_dtag_ram2_enable_set	R/W1S	0h	Interrupt Enable Set Register for cpu1_dtag_ram2_pend
9	cpu1_dtag_ram1_enable_set	R/W1S	0h	Interrupt Enable Set Register for cpu1_dtag_ram1_pend
8	cpu1_dtag_ram0_enable_set	R/W1S	0h	Interrupt Enable Set Register for cpu1_dtag_ram0_pend
7	cpu1_idata_bank3_enable_set	R/W1S	0h	Interrupt Enable Set Register for cpu1_idata_bank3_pend
6	cpu1_idata_bank2_enable_set	R/W1S	0h	Interrupt Enable Set Register for cpu1_idata_bank2_pend
5	cpu1_idata_bank1_enable_set	R/W1S	0h	Interrupt Enable Set Register for cpu1_idata_bank1_pend
4	cpu1_idata_bank0_enable_set	R/W1S	0h	Interrupt Enable Set Register for cpu1_idata_bank0_pend
3	cpu1_itag_ram3_enable_set	R/W1S	0h	Interrupt Enable Set Register for cpu1_itag_ram3_pend
2	cpu1_itag_ram2_enable_set	R/W1S	0h	Interrupt Enable Set Register for cpu1_itag_ram2_pend
1	cpu1_itag_ram1_enable_set	R/W1S	0h	Interrupt Enable Set Register for cpu1_itag_ram1_pend
0	cpu1_itag_ram0_enable_set	R/W1S	0h	Interrupt Enable Set Register for cpu1_itag_ram0_pend

Copyright © 2025 Texas Instruments Incorporated

11.8.8.4.3.18 ded_enable_clr_reg0 Register (Offset = 1C0h) [reset = X]

ded_enable_clr_reg0 is shown in Figure 11-694 and described in Table 11-1934.

Return to the Table 11-1916.

Interrupt Enable Clear Register 0

Figure 11-694. ded_enable_clr_reg0 Register

31	30	29	28	27	26	25	24
RESERVED				cpu1_ks_vim_ramecc_enable_clr	b1tcm1_bank1_enable_clr	b1tcm1_bank0_enable_clr	b0tcm1_bank1_enable_clr
R/W-X				R/W1C-0h	R/W1C-0h	R/W1C-0h	R/W1C-0h
23	22	21	20	19	18	17	16
b0tcm1_bank0_enable_clr	atcm1_bank1_enable_clr	atcm1_bank0_enable_clr	cpu1_ddata_ram7_enable_clr	cpu1_ddata_ram6_enable_clr	cpu1_ddata_ram5_enable_clr	cpu1_ddata_ram4_enable_clr	cpu1_ddata_ram3_enable_clr
R/W1C-0h	R/W1C-0h	R/W1C-0h	R/W1C-0h	R/W1C-0h	R/W1C-0h	R/W1C-0h	R/W1C-0h
15	14	13	12	11	10	9	8
cpu1_ddata_ram2_enable_clr	cpu1_ddata_ram1_enable_clr	cpu1_ddata_ram0_enable_clr	cpu1_ddirty_ram_enable_clr	cpu1_dtag_ram3_enable_clr	cpu1_dtag_ram2_enable_clr	cpu1_dtag_ram1_enable_clr	cpu1_dtag_ram0_enable_clr
R/W1C-0h	R/W1C-0h	R/W1C-0h	R/W1C-0h	R/W1C-0h	R/W1C-0h	R/W1C-0h	R/W1C-0h
7	6	5	4	3	2	1	0
cpu1_idata_bank3_enable_clr	cpu1_idata_bank2_enable_clr	cpu1_idata_bank1_enable_clr	cpu1_idata_bank0_enable_clr	cpu1_itag_ram3_enable_clr	cpu1_itag_ram2_enable_clr	cpu1_itag_ram1_enable_clr	cpu1_itag_ram0_enable_clr
R/W1C-0h	R/W1C-0h	R/W1C-0h	R/W1C-0h	R/W1C-0h	R/W1C-0h	R/W1C-0h	R/W1C-0h

Table 11-1934. ded_enable_clr_reg0 Register Field Descriptions

Bit	Field	Type	Reset	Description
31-28	RESERVED	R/W	X	
27	cpu1_ks_vim_ramecc_enable_clr	R/W1C	0h	Interrupt Enable Clear Register for cpu1_ks_vim_ramecc_pend
26	b1tcm1_bank1_enable_clr	R/W1C	0h	Interrupt Enable Clear Register for b1tcm1_bank1_pend
25	b1tcm1_bank0_enable_clr	R/W1C	0h	Interrupt Enable Clear Register for b1tcm1_bank0_pend
24	b0tcm1_bank1_enable_clr	R/W1C	0h	Interrupt Enable Clear Register for b0tcm1_bank1_pend
23	b0tcm1_bank0_enable_clr	R/W1C	0h	Interrupt Enable Clear Register for b0tcm1_bank0_pend
22	atcm1_bank1_enable_clr	R/W1C	0h	Interrupt Enable Clear Register for atcm1_bank1_pend
21	atcm1_bank0_enable_clr	R/W1C	0h	Interrupt Enable Clear Register for atcm1_bank0_pend
20	cpu1_ddata_ram7_enable_clr	R/W1C	0h	Interrupt Enable Clear Register for cpu1_ddata_ram7_pend
19	cpu1_ddata_ram6_enable_clr	R/W1C	0h	Interrupt Enable Clear Register for cpu1_ddata_ram6_pend
18	cpu1_ddata_ram5_enable_clr	R/W1C	0h	Interrupt Enable Clear Register for cpu1_ddata_ram5_pend
17	cpu1_ddata_ram4_enable_clr	R/W1C	0h	Interrupt Enable Clear Register for cpu1_ddata_ram4_pend
16	cpu1_ddata_ram3_enable_clr	R/W1C	0h	Interrupt Enable Clear Register for cpu1_ddata_ram3_pend
15	cpu1_ddata_ram2_enable_clr	R/W1C	0h	Interrupt Enable Clear Register for cpu1_ddata_ram2_pend
14	cpu1_ddata_ram1_enable_clr	R/W1C	0h	Interrupt Enable Clear Register for cpu1_ddata_ram1_pend

Copyright © 2025 Texas Instruments Incorporated

Table 11-1934. ded_enable_clr_reg0 Register Field Descriptions (continued)

Bit	Field	Type	Reset	Description
13	cpu1_ddata_ram0_enable_clr	R/W1C	0h	Interrupt Enable Clear Register for cpu1_ddata_ram0_pend
12	cpu1_ddirty_ram_enable_clr	R/W1C	0h	Interrupt Enable Clear Register for cpu1_ddirty_ram_pend
11	cpu1_dtag_ram3_enable_clr	R/W1C	0h	Interrupt Enable Clear Register for cpu1_dtag_ram3_pend
10	cpu1_dtag_ram2_enable_clr	R/W1C	0h	Interrupt Enable Clear Register for cpu1_dtag_ram2_pend
9	cpu1_dtag_ram1_enable_clr	R/W1C	0h	Interrupt Enable Clear Register for cpu1_dtag_ram1_pend
8	cpu1_dtag_ram0_enable_clr	R/W1C	0h	Interrupt Enable Clear Register for cpu1_dtag_ram0_pend
7	cpu1_idata_bank3_enable_clr	R/W1C	0h	Interrupt Enable Clear Register for cpu1_idata_bank3_pend
6	cpu1_idata_bank2_enable_clr	R/W1C	0h	Interrupt Enable Clear Register for cpu1_idata_bank2_pend
5	cpu1_idata_bank1_enable_clr	R/W1C	0h	Interrupt Enable Clear Register for cpu1_idata_bank1_pend
4	cpu1_idata_bank0_enable_clr	R/W1C	0h	Interrupt Enable Clear Register for cpu1_idata_bank0_pend
3	cpu1_itag_ram3_enable_clr	R/W1C	0h	Interrupt Enable Clear Register for cpu1_itag_ram3_pend
2	cpu1_itag_ram2_enable_clr	R/W1C	0h	Interrupt Enable Clear Register for cpu1_itag_ram2_pend
1	cpu1_itag_ram1_enable_clr	R/W1C	0h	Interrupt Enable Clear Register for cpu1_itag_ram1_pend
0	cpu1_itag_ram0_enable_clr	R/W1C	0h	Interrupt Enable Clear Register for cpu1_itag_ram0_pend

Copyright © 2025 Texas Instruments Incorporated

11.8.8.4.3.19 aggr_enable_set Register (Offset = 200h) [reset = X]

aggr_enable_set is shown in Figure 11-695 and described in Table 11-1935.

Return to the Table 11-1916.

AGGR interrupt enable set Register

Figure 11-695. aggr_enable_set Register

31	30	29	28	27	26	25	24
RESERVED							
R/W-X							
23	22	21	20	19	18	17	16
RESERVED							
R/W-X							
15	14	13	12	11	10	9	8
RESERVED							
R/W-X							
7	6	5	4	3	2	1	0
RESERVED						timeout	parity
R/W-X						R/W1S-0h	R/W1S-0h

Table 11-1935. aggr_enable_set Register Field Descriptions

Bit	Field	Type	Reset	Description
31-2	RESERVED	R/W	X	
1	timeout	R/W1S	0h	interrupt enable set for svbus timeout errors
0	parity	R/W1S	0h	interrupt enable set for parity errors

Copyright © 2025 Texas Instruments Incorporated

11.8.8.4.3.20 aggr_enable_clr Register (Offset = 204h) [reset = X]

aggr_enable_clr is shown in Figure 11-696 and described in Table 11-1936.

Return to the Table 11-1916.

AGGR interrupt enable clear Register

Figure 11-696. aggr_enable_clr Register

31	30	29	28	27	26	25	24
RESERVED							
R/W-X							
23	22	21	20	19	18	17	16
RESERVED							
R/W-X							
15	14	13	12	11	10	9	8
RESERVED							
R/W-X							
7	6	5	4	3	2	1	0
RESERVED						timeout	parity
R/W-X						R/W1C-0h	R/W1C-0h

Table 11-1936. aggr_enable_clr Register Field Descriptions

Bit	Field	Type	Reset	Description
31-2	RESERVED	R/W	X	
1	timeout	R/W1C	0h	interrupt enable clear for svbus timeout errors
0	parity	R/W1C	0h	interrupt enable clear for parity errors

Copyright © 2025 Texas Instruments Incorporated

11.8.8.4.3.21 aggr_status_set Register (Offset = 208h) [reset = X]

aggr_status_set is shown in Figure 11-697 and described in Table 11-1937.

Return to the Table 11-1916.

AGGR interrupt status set Register

Figure 11-697. aggr_status_set Register

31	30	29	28	27	26	25	24
RESERVED							
R/W-X							
23	22	21	20	19	18	17	16
RESERVED							
R/W-X							
15	14	13	12	11	10	9	8
RESERVED							
R/W-X							
7	6	5	4	3	2	1	0
RESERVED				timeout		parity	
R/W-X				R/Wincr-0h		R/Wincr-0h	

Table 11-1937. aggr_status_set Register Field Descriptions

Bit	Field	Type	Reset	Description
31-4	RESERVED	R/W	X	
3-2	timeout	R/Wincr	0h	interrupt status set for svbus timeout errors
1-0	parity	R/Wincr	0h	interrupt status set for parity errors

Copyright © 2025 Texas Instruments Incorporated

11.8.8.4.3.22 aggr_status_clr Register (Offset = 20Ch) [reset = X]

aggr_status_clr is shown in Figure 11-698 and described in Table 11-1938.

Return to the Table 11-1916.

AGGR interrupt status clear Register

Figure 11-698. aggr_status_clr Register

31	30	29	28	27	26	25	24
RESERVED							
R/W-X							
23	22	21	20	19	18	17	16
RESERVED							
R/W-X							
15	14	13	12	11	10	9	8
RESERVED							
R/W-X							
7	6	5	4	3	2	1	0
RESERVED				timeout		parity	
R/W-X				R/Wdecr-0h		R/Wdecr-0h	

Table 11-1938. aggr_status_clr Register Field Descriptions

Bit	Field	Type	Reset	Description
31-4	RESERVED	R/W	X	
3-2	timeout	R/Wdecr	0h	interrupt status clear for svbus timeout errors
1-0	parity	R/Wdecr	0h	interrupt status clear for parity errors

Copyright © 2025 Texas Instruments Incorporated

11.8.8.4.4 MSS_ECC_AGG_MSS Registers

Table 11-1939 lists the MSS_ECC_AGG_MSS registers. All register offset addresses not listed in Table 11-1939 should be considered as reserved locations and the register contents should not be modified.

Table 11-1939. MSS_ECC_AGG_MSS Registers

Offset	Acronym	Register Name	Section
0h	rev	Aggregator Revision Register	Section 12.8.8.4.4.1
8h	vector	ECC Vector Register	Section 12.8.8.4.4.2
Ch	stat	Misc Status	Section 12.8.8.4.4.3
10h	wrap_rev	ECC Wrapper Revision Register	Section 12.8.8.4.4.4
14h	ctrl	ECC Control	Section 12.8.8.4.4.5
18h	err_ctrl1	ECC Error Control1 Register	Section 12.8.8.4.4.6
1Ch	err_ctrl2	ECC Error Control2 Register	Section 12.8.8.4.4.7
20h	err_stat1	ECC Error Status1 Register	Section 12.8.8.4.4.8
24h	err_stat2	ECC Error Status2 Register	Section 12.8.8.4.4.9
28h	err_stat3	ECC Error Status3 Register	Section 12.8.8.4.4.10
3Ch	sec_eoi_reg	EOI Register	Section 12.8.8.4.4.11
40h	sec_status_reg0	Interrupt Status Register 0	Section 12.8.8.4.4.12
80h	sec_enable_set_reg0	Interrupt Enable Set Register 0	Section 12.8.8.4.4.13
C0h	sec_enable_clr_reg0	Interrupt Enable Clear Register 0	Section 12.8.8.4.4.14
13Ch	ded_eoi_reg	EOI Register	Section 12.8.8.4.4.15
140h	ded_status_reg0	Interrupt Status Register 0	Section 12.8.8.4.4.16
180h	ded_enable_set_reg0	Interrupt Enable Set Register 0	Section 12.8.8.4.4.17
1C0h	ded_enable_clr_reg0	Interrupt Enable Clear Register 0	Section 12.8.8.4.4.18
200h	aggr_enable_set	AGGR interrupt enable set Register	Section 12.8.8.4.4.19
204h	aggr_enable_clr	AGGR interrupt enable clear Register	Section 12.8.8.4.4.20
208h	aggr_status_set	AGGR interrupt status set Register	Section 12.8.8.4.4.21
20Ch	aggr_status_clr	AGGR interrupt status clear Register	Section 12.8.8.4.4.22

Copyright © 2025 Texas Instruments Incorporated

11.8.8.4.4.1 rev Register (Offset = 0h) [reset = 66A0C200h]

rev is shown in Figure 11-699 and described in Table 11-1940.

Return to the Table 11-1939.

Revision parameters

Figure 11-699. rev Register

31	30	29	28	27	26	25	24	23	22	21	20	19	18	17	16
scheme		bu		module_id											
R-1h		R-2h		R-6A0h											
15	14	13	12	11	10	9	8	7	6	5	4	3	2	1	0
revrtl					revmaj			custom		revmin					
R-18h					R-2h			R-0h		R-0h					

Table 11-1940. rev Register Field Descriptions

Bit	Field	Type	Reset	Description
31-30	scheme	R	1h	Scheme
29-28	bu	R	2h	bu
27-16	module_id	R	6A0h	Module ID
15-11	revrtl	R	18h	RTL version
10-8	revmaj	R	2h	Major version
7-6	custom	R	0h	Custom version
5-0	revmin	R	0h	Minor version

Copyright © 2025 Texas Instruments Incorporated

11.8.8.4.4.2 vector Register (Offset = 8h) [reset = X]

vector is shown in Figure 11-700 and described in Table 11-1941.

Return to the Table 11-1939.

ECC Vector Register

Figure 11-700. vector Register

31	30	29	28	27	26	25	24
RESERVED							rd_svbus_done
R/W-X							R-0h
23	22	21	20	19	18	17	16
rd_svbus_address							
R/W-0h							
15	14	13	12	11	10	9	8
rd_svbus	RESERVED				ecc_vector		
R/W1S-0h	R/W-X				R/W-0h		
7	6	5	4	3	2	1	0
ecc_vector							
R/W-0h							

Table 11-1941. vector Register Field Descriptions

Bit	Field	Type	Reset	Description
31-25	RESERVED	R/W	X	
24	rd_svbus_done	R	0h	Status to indicate if read on serial VBUS is complete
23-16	rd_svbus_address	R/W	0h	Read address
15	rd_svbus	R/W1S	0h	Write 1 to trigger a read on the serial VBUS
14-11	RESERVED	R/W	X	
10-0	ecc_vector	R/W	0h	Value written to select the corresponding ECC RAM for control or status

Copyright © 2025 Texas Instruments Incorporated

11.8.8.4.4.3 stat Register (Offset = Ch) [reset = X]

stat is shown in Figure 11-701 and described in Table 11-1942.

Return to the Table 11-1939.

Misc Status

Figure 11-701. stat Register

31	30	29	28	27	26	25	24	23	22	21	20	19	18	17	16	15	14	13	12	11	10	9	8	7	6	5	4	3	2	1	0
RESERVED																					num_rams										
R-X																					R-8h										

Table 11-1942. stat Register Field Descriptions

Bit	Field	Type	Reset	Description
31-11	RESERVED	R	X	
10-0	num_rams	R	8h	Indicates the number of RAMS serviced by the ECC aggregator

Copyright © 2025 Texas Instruments Incorporated

11.8.8.4.4.4 wrap_rev Register (Offset = 10h) [reset = 66A40202h]

wrap_rev is shown in Figure 11-702 and described in Table 11-1943.

Return to the Table 11-1939.

Revision parameters

Figure 11-702. wrap_rev Register

31	30	29	28	27	26	25	24	23	22	21	20	19	18	17	16
scheme		bu		module_id											
R-1h		R-2h		R-6A4h											
15	14	13	12	11	10	9	8	7	6	5	4	3	2	1	0
revrtl					revmaj			custom		revmin					
R-0h					R-2h			R-0h		R-2h					

Table 11-1943. wrap_rev Register Field Descriptions

Bit	Field	Type	Reset	Description
31-30	scheme	R	1h	Scheme
29-28	bu	R	2h	bu
27-16	module_id	R	6A4h	Module ID
15-11	revrtl	R	0h	RTL version
10-8	revmaj	R	2h	Major version
7-6	custom	R	0h	Custom version
5-0	revmin	R	2h	Minor version

Copyright © 2025 Texas Instruments Incorporated

11.8.8.4.4.5 ctrl Register (Offset = 14h) [reset = X]

ctrl is shown in Figure 11-703 and described in Table 11-1944.

Return to the Table 11-1939.

ECC Control Register

Figure 11-703. ctrl Register

31	30	29	28	27	26	25	24
RESERVED							
R/W-X							
23	22	21	20	19	18	17	16
RESERVED							
R/W-X							
15	14	13	12	11	10	9	8
RESERVED							check_svbus_timeout
R/W-X							R/W-1h
7	6	5	4	3	2	1	0
check_parity	error_once	force_n_row	force_ded	force_sec	enable_rmw	ecc_check	ecc_enable
R/W-1h	R/W-0h	R/W-0h	R/W-0h	R/W-0h	R/W-1h	R/W-1h	R/W-1h

Table 11-1944. ctrl Register Field Descriptions

Bit	Field	Type	Reset	Description
31-9	RESERVED	R/W	X	
8	check_svbus_timeout	R/W	1h	check for svbus timeout errors
7	check_parity	R/W	1h	check for parity errors
6	error_once	R/W	0h	Force Error only once
5	force_n_row	R/W	0h	Force Error on any RAM read
4	force_ded	R/W	0h	Force Double Bit Error
3	force_sec	R/W	0h	Force Single Bit Error
2	enable_rmw	R/W	1h	Enable rmw
1	ecc_check	R/W	1h	Enable ECC check
0	ecc_enable	R/W	1h	Enable ECC

Copyright © 2025 Texas Instruments Incorporated

11.8.8.4.4.6 err_ctrl1 Register (Offset = 18h) [reset = 0h]

err_ctrl1 is shown in Figure 11-704 and described in Table 11-1945.

Return to the Table 11-1939.

ECC Error Control1 Register

Figure 11-704. err_ctrl1 Register

31	30	29	28	27	26	25	24	23	22	21	20	19	18	17	16	15	14	13	12	11	10	9	8	7	6	5	4	3	2	1	0
ecc_row																															
R/W-0h																															

Table 11-1945. err_ctrl1 Register Field Descriptions

Bit	Field	Type	Reset	Description
31-0	ecc_row	R/W	0h	Row address where single or double-bit error needs to be applied. This is ignored if force_n_row is set

Copyright © 2025 Texas Instruments Incorporated

11.8.8.4.4.7 err_ctrl2 Register (Offset = 1Ch) [reset = 0h]

err_ctrl2 is shown in Figure 11-705 and described in Table 11-1946.

Return to the Table 11-1939.

ECC Error Control2 Register

Figure 11-705. err_ctrl2 Register

31	30	29	28	27	26	25	24	23	22	21	20	19	18	17	16	15	14	13	12	11	10	9	8	7	6	5	4	3	2	1	0
ecc_bit2																ecc_bit1															
R/W-0h																R/W-0h															

Table 11-1946. err_ctrl2 Register Field Descriptions

Bit	Field	Type	Reset	Description
31-16	ecc_bit2	R/W	0h	Data bit that needs to be flipped if double bit error needs to be forced
15-0	ecc_bit1	R/W	0h	Data bit that needs to be flipped when force_sec is set

Copyright © 2025 Texas Instruments Incorporated

11.8.8.4.4.8 err_stat1 Register (Offset = 20h) [reset = 0h]

err_stat1 is shown in Figure 11-706 and described in Table 11-1947.

Return to the Table 11-1939.

ECC Error Status1 Register

Figure 11-706. err_stat1 Register

31	30	29	28	27	26	25	24
ecc_bit1							
R-0h							
23	22	21	20	19	18	17	16
ecc_bit1							
R-0h							
15	14	13	12	11	10	9	8
clr_ctrl_reg_err	clr_parity_err		clr_ecc_other	clr_ecc_ded		clr_ecc_sec	
R/W1C-0h	R/Wdecr-0h		R/W1C-0h	R/Wdecr-0h		R/Wdecr-0h	
7	6	5	4	3	2	1	0
ctr_reg_err	parity_err		ecc_other	ecc_ded		ecc_sec	
R/W1S-0h	R/W1S-0h		R/W1S-0h	R/Wincr-0h		R/Wincr-0h	

Table 11-1947. err_stat1 Register Field Descriptions

Bit	Field	Type	Reset	Description
31-16	ecc_bit1	R	0h	Data bit that corresponds to the single-bit error
15	clr_ctrl_reg_err	R/W1C	0h	Clear control reg error Error Status, you must also re write the contorl ergister itself to clear this
14-13	clr_parity_err	R/Wdecr	0h	Clear parity Error Status
12	clr_ecc_other	R/W1C	0h	Clear other Error Status
11-10	clr_ecc_ded	R/Wdecr	0h	Clear Double Bit Error Status
9-8	clr_ecc_sec	R/Wdecr	0h	Clear Single Bit Error Status
7	ctr_reg_err	R/W1S	0h	control register error pending, Level interrupt
6-5	parity_err	R/W1S	0h	Level parity error Error Status
4	ecc_other	R/W1S	0h	successive single-bit errors have occurred while a writeback is still pending, Level interrupt
3-2	ecc_ded	R/Wincr	0h	Level Double Bit Error Status
1-0	ecc_sec	R/Wincr	0h	Level Single Bit Error Status

Copyright © 2025 Texas Instruments Incorporated

11.8.8.4.4.9 err_stat2 Register (Offset = 24h) [reset = 0h]

err_stat2 is shown in Figure 11-707 and described in Table 11-1948.

Return to the Table 11-1939.

ECC Error Status2 Register

Figure 11-707. err_stat2 Register

31	30	29	28	27	26	25	24	23	22	21	20	19	18	17	16	15	14	13	12	11	10	9	8	7	6	5	4	3	2	1	0
ecc_row																															
R-0h																															

Table 11-1948. err_stat2 Register Field Descriptions

Bit	Field	Type	Reset	Description
31-0	ecc_row	R	0h	Row address where the single or double-bit error has occurred

Copyright © 2025 Texas Instruments Incorporated

11.8.8.4.4.10 err_stat3 Register (Offset = 28h) [reset = X]

err_stat3 is shown in Figure 11-708 and described in Table 11-1949.

Return to the Table 11-1939.

ECC Error Status3 Register

Figure 11-708. err_stat3 Register

31	30	29	28	27	26	25	24
RESERVED							
R/W-X							
23	22	21	20	19	18	17	16
RESERVED							
R/W-X							
15	14	13	12	11	10	9	8
RESERVED						clr_svbus_timeout_err	RESERVED
R/W-X						R/W1C-0h	R/W-X
7	6	5	4	3	2	1	0
RESERVED						svbus_timeout_err	wb_pend
R/W-X						R/W1S-0h	R-0h

Table 11-1949. err_stat3 Register Field Descriptions

Bit	Field	Type	Reset	Description
31-10	RESERVED	R/W	X	
9	clr_svbus_timeout_err	R/W1C	0h	Clear svbus timeout Error Status
8-2	RESERVED	R/W	X	
1	svbus_timeout_err	R/W1S	0h	Level svbus timeout error Error Status
0	wb_pend	R	0h	delayed write back pending Status

Copyright © 2025 Texas Instruments Incorporated

11.8.8.4.4.11 sec_eoi_reg Register (Offset = 3Ch) [reset = X]

sec_eoi_reg is shown in Figure 11-709 and described in Table 11-1950.

Return to the Table 11-1939.

EOI Register

Figure 11-709. sec_eoi_reg Register

31	30	29	28	27	26	25	24
RESERVED							
R/W-X							
23	22	21	20	19	18	17	16
RESERVED							
R/W-X							
15	14	13	12	11	10	9	8
RESERVED							
R/W-X							
7	6	5	4	3	2	1	0
RESERVED							eoi_wr
R/W-X							R/W1S-0h

Table 11-1950. sec_eoi_reg Register Field Descriptions

Bit	Field	Type	Reset	Description
31-1	RESERVED	R/W	X	
0	eoi_wr	R/W1S	0h	EOI Register

Copyright © 2025 Texas Instruments Incorporated

11.8.8.4.4.12 sec_status_reg0 Register (Offset = 40h) [reset = X]

sec_status_reg0 is shown in Figure 11-710 and described in Table 11-1951.

Return to the Table 11-1939.

Interrupt Status Register 0

Figure 11-710. sec_status_reg0 Register

31	30	29	28	27	26	25	24
RESERVED							
R/W-X							
23	22	21	20	19	18	17	16
RESERVED							
R/W-X							
15	14	13	12	11	10	9	8
RESERVED							
R/W-X							
7	6	5	4	3	2	1	0
tptc_b0_pend	tptc_a1_pend	tptc_a0_pend	gpadc_pend	mss_retram_pend	mss_mbox_pend	mss_l2slv1_pend	mss_l2slv0_pend
R/W1S-0h	R/W1S-0h	R/W1S-0h	R/W1S-0h	R/W1S-0h	R/W1S-0h	R/W1S-0h	R/W1S-0h

Table 11-1951. sec_status_reg0 Register Field Descriptions

Bit	Field	Type	Reset	Description
31-8	RESERVED	R/W	X	
7	tptc_b0_pend	R/W1S	0h	Interrupt Pending Status for tptc_b0_pend
6	tptc_a1_pend	R/W1S	0h	Interrupt Pending Status for tptc_a1_pend
5	tptc_a0_pend	R/W1S	0h	Interrupt Pending Status for tptc_a0_pend
4	gpadc_pend	R/W1S	0h	Interrupt Pending Status for gpadc_pend
3	mss_retram_pend	R/W1S	0h	Interrupt Pending Status for mss_retram_pend
2	mss_mbox_pend	R/W1S	0h	Interrupt Pending Status for mss_mbox_pend
1	mss_l2slv1_pend	R/W1S	0h	Interrupt Pending Status for mss_l2slv1_pend
0	mss_l2slv0_pend	R/W1S	0h	Interrupt Pending Status for mss_l2slv0_pend

Copyright © 2025 Texas Instruments Incorporated

11.8.8.4.4.13 sec_enable_set_reg0 Register (Offset = 80h) [reset = X]

sec_enable_set_reg0 is shown in Figure 11-711 and described in Table 11-1952.

Return to the Table 11-1939.

Interrupt Enable Set Register 0

Figure 11-711. sec_enable_set_reg0 Register

31	30	29	28	27	26	25	24
RESERVED							
R/W-X							
23	22	21	20	19	18	17	16
RESERVED							
R/W-X							
15	14	13	12	11	10	9	8
RESERVED							
R/W-X							
7	6	5	4	3	2	1	0
tptc_b0_enable_set	tptc_a1_enable_set	tptc_a0_enable_set	gpadc_enable_set	mss_retram_enable_set	mss_mbox_enable_set	mss_l2slv1_enable_set	mss_l2slv0_enable_set
R/W1S-0h	R/W1S-0h	R/W1S-0h	R/W1S-0h	R/W1S-0h	R/W1S-0h	R/W1S-0h	R/W1S-0h

Table 11-1952. sec_enable_set_reg0 Register Field Descriptions

Bit	Field	Type	Reset	Description
31-8	RESERVED	R/W	X	
7	tptc_b0_enable_set	R/W1S	0h	Interrupt Enable Set Register for tptc_b0_pend
6	tptc_a1_enable_set	R/W1S	0h	Interrupt Enable Set Register for tptc_a1_pend
5	tptc_a0_enable_set	R/W1S	0h	Interrupt Enable Set Register for tptc_a0_pend
4	gpadc_enable_set	R/W1S	0h	Interrupt Enable Set Register for gpadc_pend
3	mss_retram_enable_set	R/W1S	0h	Interrupt Enable Set Register for mss_retram_pend
2	mss_mbox_enable_set	R/W1S	0h	Interrupt Enable Set Register for mss_mbox_pend
1	mss_l2slv1_enable_set	R/W1S	0h	Interrupt Enable Set Register for mss_l2slv1_pend
0	mss_l2slv0_enable_set	R/W1S	0h	Interrupt Enable Set Register for mss_l2slv0_pend

Copyright © 2025 Texas Instruments Incorporated

11.8.8.4.4.14 sec_enable_clr_reg0 Register (Offset = C0h) [reset = X]

sec_enable_clr_reg0 is shown in Figure 11-712 and described in Table 11-1953.

Return to the Table 11-1939.

Interrupt Enable Clear Register 0

Figure 11-712. sec_enable_clr_reg0 Register

31	30	29	28	27	26	25	24
RESERVED							
R/W-X							
23	22	21	20	19	18	17	16
RESERVED							
R/W-X							
15	14	13	12	11	10	9	8
RESERVED							
R/W-X							
7	6	5	4	3	2	1	0
tptc_b0_enable_clr	tptc_a1_enable_clr	tptc_a0_enable_clr	gpadc_enable_clr	mss_retram_enable_clr	mss_mbox_enable_clr	mss_l2slv1_enable_clr	mss_l2slv0_enable_clr
R/W1C-0h	R/W1C-0h	R/W1C-0h	R/W1C-0h	R/W1C-0h	R/W1C-0h	R/W1C-0h	R/W1C-0h

Table 11-1953. sec_enable_clr_reg0 Register Field Descriptions

Bit	Field	Type	Reset	Description
31-8	RESERVED	R/W	X	
7	tptc_b0_enable_clr	R/W1C	0h	Interrupt Enable Clear Register for tptc_b0_pend
6	tptc_a1_enable_clr	R/W1C	0h	Interrupt Enable Clear Register for tptc_a1_pend
5	tptc_a0_enable_clr	R/W1C	0h	Interrupt Enable Clear Register for tptc_a0_pend
4	gpadc_enable_clr	R/W1C	0h	Interrupt Enable Clear Register for gpadc_pend
3	mss_retram_enable_clr	R/W1C	0h	Interrupt Enable Clear Register for mss_retram_pend
2	mss_mbox_enable_clr	R/W1C	0h	Interrupt Enable Clear Register for mss_mbox_pend
1	mss_l2slv1_enable_clr	R/W1C	0h	Interrupt Enable Clear Register for mss_l2slv1_pend
0	mss_l2slv0_enable_clr	R/W1C	0h	Interrupt Enable Clear Register for mss_l2slv0_pend

Copyright © 2025 Texas Instruments Incorporated

11.8.8.4.4.15 ded_eoi_reg Register (Offset = 13Ch) [reset = X]

ded_eoi_reg is shown in Figure 11-713 and described in Table 11-1954.

Return to the Table 11-1939.

EOI Register

Figure 11-713. ded_eoi_reg Register

31	30	29	28	27	26	25	24
RESERVED							
R/W-X							
23	22	21	20	19	18	17	16
RESERVED							
R/W-X							
15	14	13	12	11	10	9	8
RESERVED							
R/W-X							
7	6	5	4	3	2	1	0
RESERVED							eoi_wr
R/W-X							R/W1S-0h

Table 11-1954. ded_eoi_reg Register Field Descriptions

Bit	Field	Type	Reset	Description
31-1	RESERVED	R/W	X	
0	eoi_wr	R/W1S	0h	EOI Register

Copyright © 2025 Texas Instruments Incorporated

11.8.8.4.4.16 ded_status_reg0 Register (Offset = 140h) [reset = X]

ded_status_reg0 is shown in Figure 11-714 and described in Table 11-1955.

Return to the Table 11-1939.

Interrupt Status Register 0

Figure 11-714. ded_status_reg0 Register

31	30	29	28	27	26	25	24
RESERVED							
R/W-X							
23	22	21	20	19	18	17	16
RESERVED							
R/W-X							
15	14	13	12	11	10	9	8
RESERVED							
R/W-X							
7	6	5	4	3	2	1	0
tptc_b0_pend	tptc_a1_pend	tptc_a0_pend	gpadc_pend	mss_retram_pend	mss_mbox_pend	mss_l2slv1_pend	mss_l2slv0_pend
R/W1S-0h	R/W1S-0h	R/W1S-0h	R/W1S-0h	R/W1S-0h	R/W1S-0h	R/W1S-0h	R/W1S-0h

Table 11-1955. ded_status_reg0 Register Field Descriptions

Bit	Field	Type	Reset	Description
31-8	RESERVED	R/W	X	
7	tptc_b0_pend	R/W1S	0h	Interrupt Pending Status for tptc_b0_pend
6	tptc_a1_pend	R/W1S	0h	Interrupt Pending Status for tptc_a1_pend
5	tptc_a0_pend	R/W1S	0h	Interrupt Pending Status for tptc_a0_pend
4	gpadc_pend	R/W1S	0h	Interrupt Pending Status for gpadc_pend
3	mss_retram_pend	R/W1S	0h	Interrupt Pending Status for mss_retram_pend
2	mss_mbox_pend	R/W1S	0h	Interrupt Pending Status for mss_mbox_pend
1	mss_l2slv1_pend	R/W1S	0h	Interrupt Pending Status for mss_l2slv1_pend
0	mss_l2slv0_pend	R/W1S	0h	Interrupt Pending Status for mss_l2slv0_pend

Copyright © 2025 Texas Instruments Incorporated

11.8.8.4.4.17 ded_enable_set_reg0 Register (Offset = 180h) [reset = X]

ded_enable_set_reg0 is shown in Figure 11-715 and described in Table 11-1956.

Return to the Table 11-1939.

Interrupt Enable Set Register 0

Figure 11-715. ded_enable_set_reg0 Register

31	30	29	28	27	26	25	24
RESERVED							
R/W-X							
23	22	21	20	19	18	17	16
RESERVED							
R/W-X							
15	14	13	12	11	10	9	8
RESERVED							
R/W-X							
7	6	5	4	3	2	1	0
tptc_b0_enable_set	tptc_a1_enable_set	tptc_a0_enable_set	gpadc_enable_set	mss_retram_enable_set	mss_mbox_enable_set	mss_l2slv1_enable_set	mss_l2slv0_enable_set
R/W1S-0h	R/W1S-0h	R/W1S-0h	R/W1S-0h	R/W1S-0h	R/W1S-0h	R/W1S-0h	R/W1S-0h

Table 11-1956. ded_enable_set_reg0 Register Field Descriptions

Bit	Field	Type	Reset	Description
31-8	RESERVED	R/W	X	
7	tptc_b0_enable_set	R/W1S	0h	Interrupt Enable Set Register for tptc_b0_pend
6	tptc_a1_enable_set	R/W1S	0h	Interrupt Enable Set Register for tptc_a1_pend
5	tptc_a0_enable_set	R/W1S	0h	Interrupt Enable Set Register for tptc_a0_pend
4	gpadc_enable_set	R/W1S	0h	Interrupt Enable Set Register for gpadc_pend
3	mss_retram_enable_set	R/W1S	0h	Interrupt Enable Set Register for mss_retram_pend
2	mss_mbox_enable_set	R/W1S	0h	Interrupt Enable Set Register for mss_mbox_pend
1	mss_l2slv1_enable_set	R/W1S	0h	Interrupt Enable Set Register for mss_l2slv1_pend
0	mss_l2slv0_enable_set	R/W1S	0h	Interrupt Enable Set Register for mss_l2slv0_pend

Copyright © 2025 Texas Instruments Incorporated

11.8.8.4.4.18 ded_enable_clr_reg0 Register (Offset = 1C0h) [reset = X]

ded_enable_clr_reg0 is shown in Figure 11-716 and described in Table 11-1957.

Return to the Table 11-1939.

Interrupt Enable Clear Register 0

Figure 11-716. ded_enable_clr_reg0 Register

31	30	29	28	27	26	25	24
RESERVED							
R/W-X							
23	22	21	20	19	18	17	16
RESERVED							
R/W-X							
15	14	13	12	11	10	9	8
RESERVED							
R/W-X							
7	6	5	4	3	2	1	0
tptc_b0_enable_clr	tptc_a1_enable_clr	tptc_a0_enable_clr	gpadc_enable_clr	mss_retram_enable_clr	mss_mbox_enable_clr	mss_l2slv1_enable_clr	mss_l2slv0_enable_clr
R/W1C-0h	R/W1C-0h	R/W1C-0h	R/W1C-0h	R/W1C-0h	R/W1C-0h	R/W1C-0h	R/W1C-0h

Table 11-1957. ded_enable_clr_reg0 Register Field Descriptions

Bit	Field	Type	Reset	Description
31-8	RESERVED	R/W	X	
7	tptc_b0_enable_clr	R/W1C	0h	Interrupt Enable Clear Register for tptc_b0_pend
6	tptc_a1_enable_clr	R/W1C	0h	Interrupt Enable Clear Register for tptc_a1_pend
5	tptc_a0_enable_clr	R/W1C	0h	Interrupt Enable Clear Register for tptc_a0_pend
4	gpadc_enable_clr	R/W1C	0h	Interrupt Enable Clear Register for gpadc_pend
3	mss_retram_enable_clr	R/W1C	0h	Interrupt Enable Clear Register for mss_retram_pend
2	mss_mbox_enable_clr	R/W1C	0h	Interrupt Enable Clear Register for mss_mbox_pend
1	mss_l2slv1_enable_clr	R/W1C	0h	Interrupt Enable Clear Register for mss_l2slv1_pend
0	mss_l2slv0_enable_clr	R/W1C	0h	Interrupt Enable Clear Register for mss_l2slv0_pend

Copyright © 2025 Texas Instruments Incorporated

11.8.8.4.4.19 aggr_enable_set Register (Offset = 200h) [reset = X]

aggr_enable_set is shown in Figure 11-717 and described in Table 11-1958.

Return to the Table 11-1939.

AGGR interrupt enable set Register

Figure 11-717. aggr_enable_set Register

31	30	29	28	27	26	25	24
RESERVED							
R/W-X							
23	22	21	20	19	18	17	16
RESERVED							
R/W-X							
15	14	13	12	11	10	9	8
RESERVED							
R/W-X							
7	6	5	4	3	2	1	0
RESERVED						timeout	parity
R/W-X						R/W1S-0h	R/W1S-0h

Table 11-1958. aggr_enable_set Register Field Descriptions

Bit	Field	Type	Reset	Description
31-2	RESERVED	R/W	X	
1	timeout	R/W1S	0h	interrupt enable set for svbus timeout errors
0	parity	R/W1S	0h	interrupt enable set for parity errors

Copyright © 2025 Texas Instruments Incorporated

11.8.8.4.4.20 aggr_enable_clr Register (Offset = 204h) [reset = X]

aggr_enable_clr is shown in Figure 11-718 and described in Table 11-1959.

Return to the Table 11-1939.

AGGR interrupt enable clear Register

Figure 11-718. aggr_enable_clr Register

31	30	29	28	27	26	25	24
RESERVED							
R/W-X							
23	22	21	20	19	18	17	16
RESERVED							
R/W-X							
15	14	13	12	11	10	9	8
RESERVED							
R/W-X							
7	6	5	4	3	2	1	0
RESERVED						timeout	parity
R/W-X						R/W1C-0h	R/W1C-0h

Table 11-1959. aggr_enable_clr Register Field Descriptions

Bit	Field	Type	Reset	Description
31-2	RESERVED	R/W	X	
1	timeout	R/W1C	0h	interrupt enable clear for svbus timeout errors
0	parity	R/W1C	0h	interrupt enable clear for parity errors

Copyright © 2025 Texas Instruments Incorporated

11.8.8.4.4.21 aggr_status_set Register (Offset = 208h) [reset = X]

aggr_status_set is shown in Figure 11-719 and described in Table 11-1960.

Return to the Table 11-1939.

AGGR interrupt status set Register

Figure 11-719. aggr_status_set Register

31	30	29	28	27	26	25	24
RESERVED							
R/W-X							
23	22	21	20	19	18	17	16
RESERVED							
R/W-X							
15	14	13	12	11	10	9	8
RESERVED							
R/W-X							
7	6	5	4	3	2	1	0
RESERVED				timeout		parity	
R/W-X				R/Wincr-0h		R/Wincr-0h	

Table 11-1960. aggr_status_set Register Field Descriptions

Bit	Field	Type	Reset	Description
31-4	RESERVED	R/W	X	
3-2	timeout	R/Wincr	0h	interrupt status set for svbus timeout errors
1-0	parity	R/Wincr	0h	interrupt status set for parity errors

Copyright © 2025 Texas Instruments Incorporated

11.8.8.4.4.22 aggr_status_clr Register (Offset = 20Ch) [reset = X]

aggr_status_clr is shown in Figure 11-720 and described in Table 11-1961.

Return to the Table 11-1939.

AGGR interrupt status clear Register

Figure 11-720. aggr_status_clr Register

31	30	29	28	27	26	25	24
RESERVED							
R/W-X							
23	22	21	20	19	18	17	16
RESERVED							
R/W-X							
15	14	13	12	11	10	9	8
RESERVED							
R/W-X							
7	6	5	4	3	2	1	0
RESERVED				timeout		parity	
R/W-X				R/Wdecr-0h		R/Wdecr-0h	

Table 11-1961. aggr_status_clr Register Field Descriptions

Bit	Field	Type	Reset	Description
31-4	RESERVED	R/W	X	
3-2	timeout	R/Wdecr	0h	interrupt status clear for svbus timeout errors
1-0	parity	R/Wdecr	0h	interrupt status clear for parity errors

11.8.8.5 Error Signaling Module (ESM)

This section provides the details of the error signaling module (ESM) that aggregates device errors and provides internal and external error response based on error severity.

11.8.8.5.1 Overview

The Error Signaling Module (ESM) collects and reports the various error conditions on the microcontroller. The error condition is categorized based on a severity level. Error response is then generated based on the category of the error. Possible error responses include a low priority interrupt, high priority interrupt, and an external pin action.

11.8.8.5.2 Feature List

- Up to 192 error channels (MSS/DSS) are supported, divided into 3 different groups:
  - 128 Group1 (low severity) channels with configurable interrupt generation and configurable $\overline{\text{ERROR}}$ pin behavior
  - 32 Group2 (high severity) channels with predefined interrupt generation and predefined $\overline{\text{ERROR}}$ pin behavior
  - 32 Group3 (high severity) channels with no interrupt generation and predefined $\overline{\text{ERROR}}$ pin behavior. These channels have no interrupt response as they are reserved for CPU based diagnostics that generate aborts directly to the CPU.
- Dedicated device $\overline{\text{ERROR}}$ pin to signal an external observer
- Configurable timebase for $\overline{\text{ERROR}}$ pin output
- Error forcing capability for latent fault testing

Copyright © 2025 Texas Instruments Incorporated

11.8.8.5.3 Block Diagram

As shown in Figure 11-721, the ESM channels are divided into three groups. Group1 channels are considered to be low severity. Group1 errors have a configurable interrupt response and configurable $\overline{\text{ERROR}}$ pin behavior. Note that the ESM Status Register 1 (ESMSR1) for error group 1 gets updated, regardless if the interrupt enable is active or not. Group2 channels are $\overline{\text{ERROR}}$ high severity. Group2 errors always generate a high priority interrupt and an output on the $\overline{\text{ERROR}}$ pin. Group3 errors are reserved for high severity errors generated by diagnostics which have already generated a CPU abort response. Because an abort response is generated, there is no need to generate an interrupt response. Group3 errors always generate an $\overline{\text{ERROR}}$ pin output.

The ESM interrupt and $\overline{\text{ERROR}}$ pin behavior are also summarized in Table 11-1962.

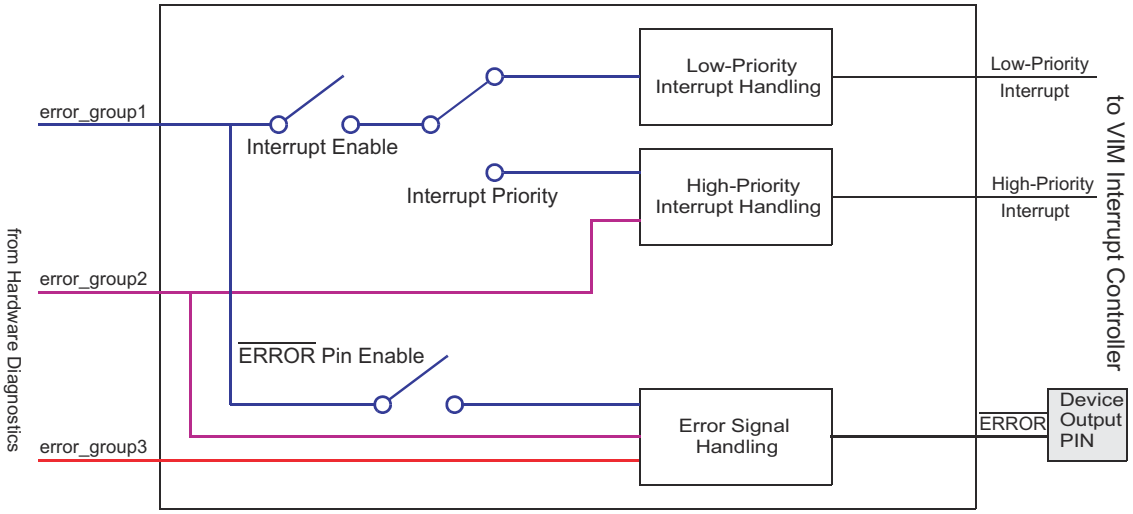

Note that the ESM Status Register 1 (ESMSR1) for error_group1 gets updated, regardless if the interrupt enable is active or not.

Figure 11-721. Block Diagram

Copyright © 2025 Texas Instruments Incorporated

Table 11-1962. ESM Interrupt and $\overline{\text{ERROR}}$ Pin Behavior

Error Group	Interrupt Generated	Interrupt Priority	$\overline{\text{ERROR}}$ Pin Response Generated
1	configurable interrupt	configurable priority	configurable output generation
2	interrupt generated	high priority	output generated
3	no interrupt	NA	output generated

Figure 11-722 and Figure 11-723 show the interrupt response handling and $\overline{\text{ERROR}}$ pin response handling with register configuration. The total active time of the $\overline{\text{ERROR}}$ pin is controlled by the Low-Time Counter Preload register (LTCP) and the key register (ESMEPSR) as shown in Figure 11-723. See for details.

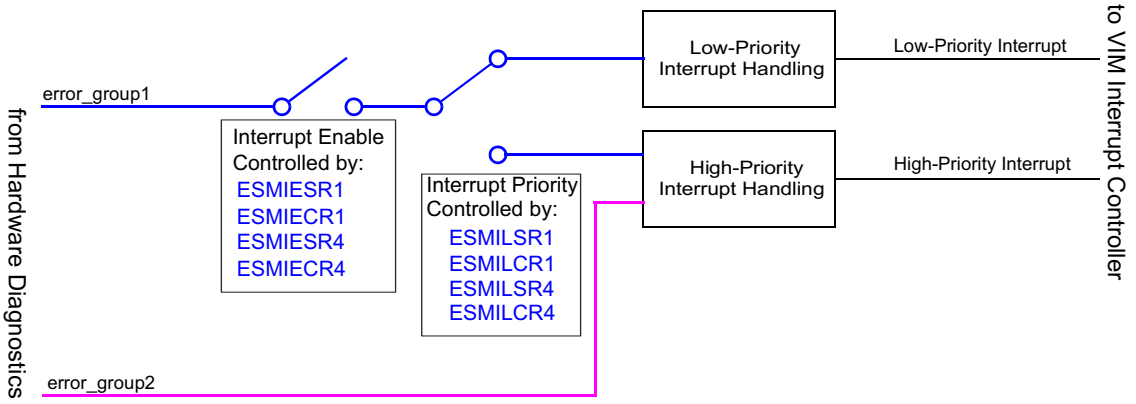

Figure 11-722. Interrupt Response Handling

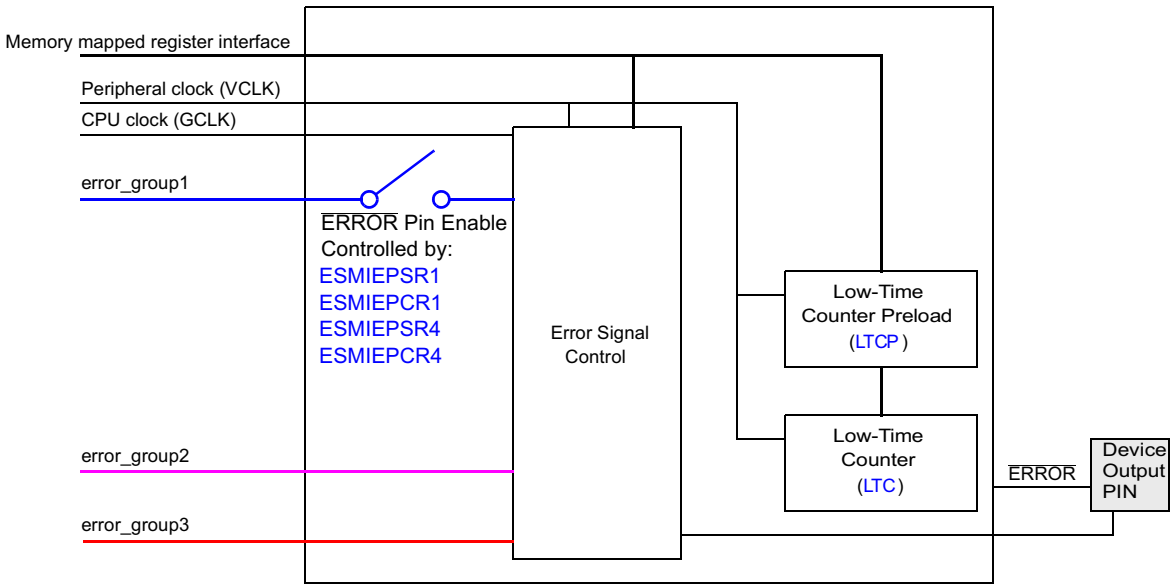

Figure 11-723. $\overline{\text{ERROR}}$ Pin Response Handling

11.8.8.5.4 Integration Details

TPR1x has 3 instances of the ESM module.

	Parameters

Copyright © 2025 Texas Instruments Incorporated

Instance	Max Group 1	Max Group 2	Max Group 3
MSS_ESM	128	32	32
DSS_ESM	128	32	32
HSM_ESM	Refer HSM Design Specification		

Refer to Section 11.8.4.9 for the ESM Interrupt map.

Copyright © 2025 Texas Instruments Incorporated

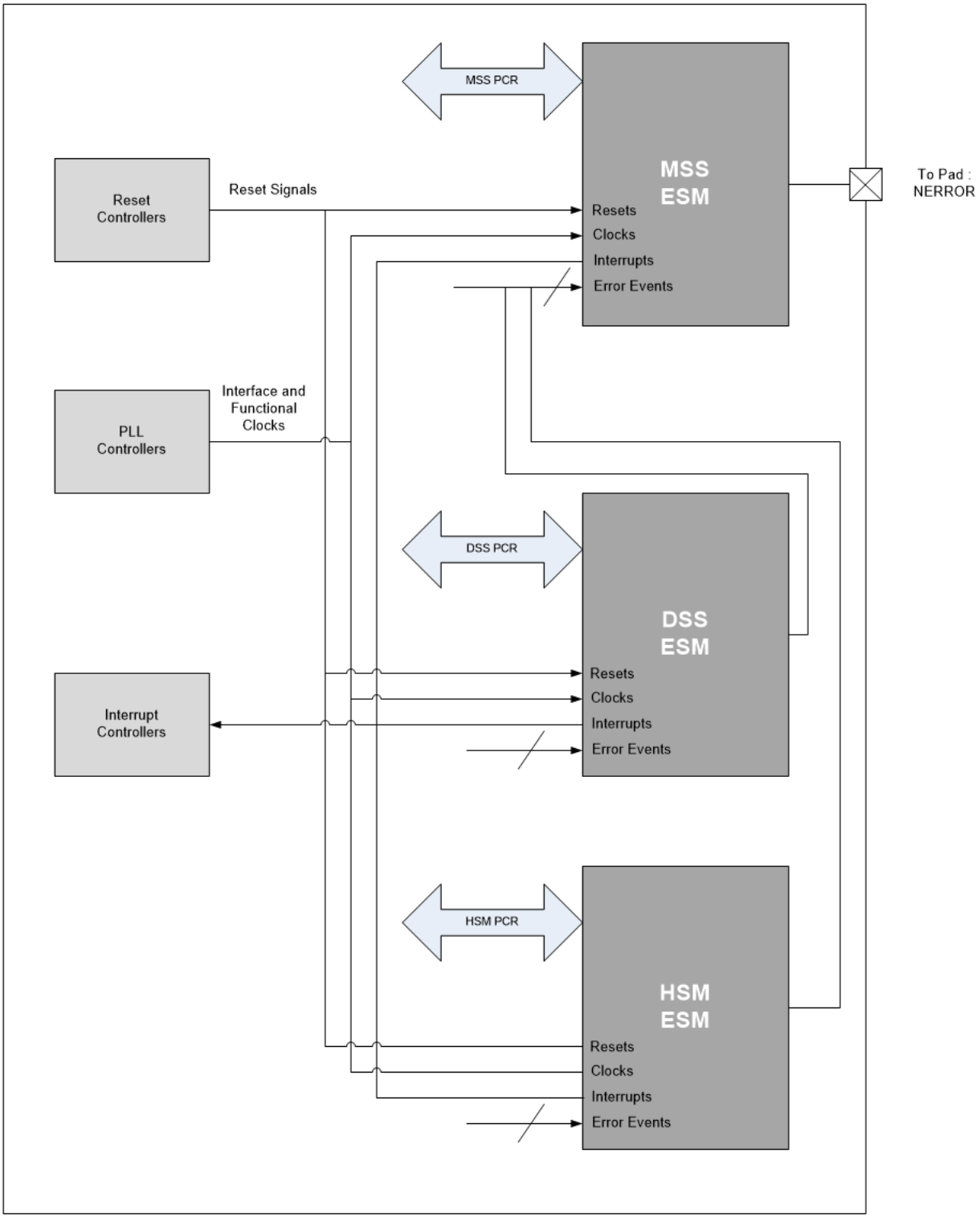

Figure 11-724. ESM Block Diagram

11.8.8.5.5 Module Operation

This device has 40 error channels (APPSS), divided into 2 different error groups. Please refer to the device datasheet for ESM channel assignment details.

Copyright © 2025 Texas Instruments Incorporated

The ESM module has error flags for each error channel. The error status registers ESMSR1, ESMSR4, ESMSR2, ESMSR3 provide status information on a pending error of Group1 (Channel 0-31), Group1 (Channel 32-63), Group1 (Channel 64-95), Group2, and Group3, respectively. The ESMEPSR register provides the current ERROR status. The module also provides a status shadow register, ESMSSR2, which maintains the error flags of Group2 until power-on reset (PORRST) is asserted. See for details of their behavior during power on reset and warm reset.

Once an error occurs, the ESM module will set the corresponding error flags. In addition, it can trigger an interrupt, ERROR pin outputs low depending on the ESM settings. Once the ERROR pin outputs low, a power on reset or a write of 0x5 to ESMEKR is required to release the ESM error pin back to normal state. The application can read the error status registers (ESMSR1, ESMSR4, ESMSR7, ESMSR2, and ESMSR3) to debug the error. If an RST is triggered or the error interrupt has been served, the error flag of Group2 should be read from ESMSSR2 because the error flag in ESMSR2 will be cleared by RST.

The functionality of the ERROR pin can be tested by forcing an error.

11.8.8.5.5.1 Reset Behavior

Power on reset:

- ERROR pin behavior

  When nPORRST is active, the ERROR pin is in a high impedance state (output drivers disabled).
- Register behavior

  After PORRST, all registers in ESM module will be re-initialized to the default value. All the error status registers are cleared to zero.

Warm reset (RST):

- ERROR pin behavior

  During RST, the ERROR pin is in “output active” state with pull-down disabled. The ERROR pin remains unchanged after RST.
- Register behavior

  After RST, ESMSR1, ESMSR4, ESMSR7, ESMSSR2, ESMSR3 and ESMEPSR register values remains un-changed. Since RST does not clear the critical failure registers, the user can read those registers to debug the failures after RST pin goes back to high.

After RST, if one of the flags in ESMSR1, ESMSR4 and ESMSR7 is set, the interrupt service routine will be called once the corresponding interrupt is enabled.

-

Note

ESMSR2 is cleared after RST. The flag in ESMSR2 gets cleared when reading the appropriate vector in the ESMIOFFHR offset register. Reading ESMIOFFHR will not clear the ESMSR1, ESMSR4, ESMSR7 and the shadow register ESMSSR2. Reading ESMIOFFLR will also not clear the ESMSR1, ESMSR4 and ESMSR7.

Copyright © 2025 Texas Instruments Incorporated

11.8.8.5.5.2 $\overline{\text{ERROR}}$ Pin Timing

The $\overline{\text{ERROR}}$ pin is an active low function. The state of the pin is also readable from $\overline{\text{ERROR}}$ Pin Status Register (ESMEPSR). A warm reset ($\overline{\text{RST}}$) does not affect the state of the pin. The pin is in a high-impedance state during power-on reset. Once the ESM module drives the $\overline{\text{ERROR}}$ pin low, it remains in this state for the time specified by the Low-Time Counter Preload register (LTCPR). Based on the time period of the peripheral clock (VCLK), the total active time of the $\overline{\text{ERROR}}$ pin can be calculated as:

$$t_{\overline{ERROR}_low} = t_{VCLK} \times (LTCP + 1) \quad (13)$$

Once this period expires, the $\overline{\text{ERROR}}$ pin is set to high in case the reset of the $\overline{\text{ERROR}}$ pin was requested. This request is done by writing an appropriate key (0x5) to the key register (ESMEKR) during the $\overline{\text{ERROR}}$ pin low time. Here are a few examples:

Example 1: ESM detects a failure and drives the $\overline{\text{ERROR}}$ pin low. No $\overline{\text{ERROR}}$ pin reset is requested. The $\overline{\text{ERROR}}$ pin continues outputting low until power on reset occurs.

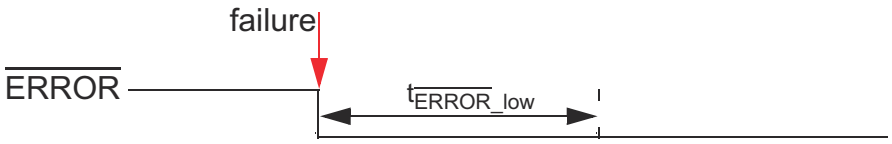

Figure 11-725. $\overline{\text{ERROR}}$ Pin Timing - Example 1

Example 2: ESM detects a failure and drives the $\overline{\text{ERROR}}$ pin low. An $\overline{\text{ERROR}}$ pin reset request is received before t $_{\overline{\text{ERROR}}_low}$ expires. In this case, the $\overline{\text{ERROR}}$ pin is set to high immediately after t $_{\overline{\text{ERROR}}_low}$ expires.

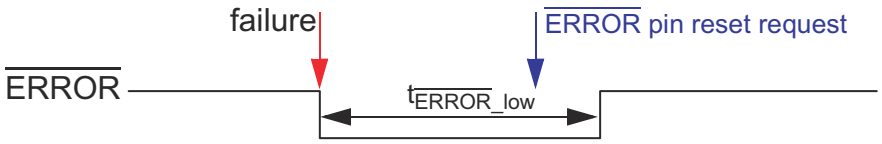

Figure 11-726. $\overline{\text{ERROR}}$ Pin Timing - Example 2

Example 3: ESM detects a failure and drives the $\overline{\text{ERROR}}$ pin low. An $\overline{\text{ERROR}}$ pin reset request is received after t $_{\overline{\text{ERROR}}_low}$ expires. In this case, the $\overline{\text{ERROR}}$ pin is set to high immediately after $\overline{\text{ERROR}}$ pin reset request is received.



Figure 11-727. $\overline{\text{ERROR}}$ Pin Timing - Example 3

Copyright © 2025 Texas Instruments Incorporated

Example 4: ESM detects a failure and drives the $\overline{\text{ERROR}}$ pin low. Another failure occurs within the time the pin stays low. In this case, the low time counter will be reset when the other failure occurs. In other words, $t_{\overline{\text{ERROR}}_low}$ should be counted from whenever the most recent failure occurs.

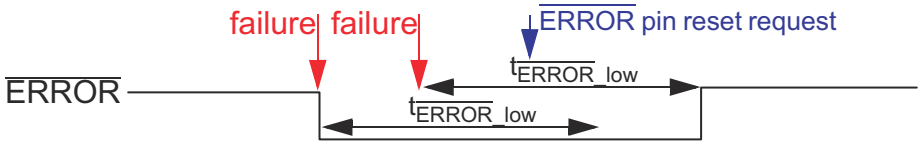

Figure 11-728. $\overline{\text{ERROR}}$ Pin Timing - Example 4

Example 5: The reset of the $\overline{\text{ERROR}}$ pin was requested by the software even before the failure occurs. In this case, the $\overline{\text{ERROR}}$ pin is set to high immediately after $t_{\overline{\text{ERROR}}_low}$ expires. This case is not recommended and should be avoided by the application.

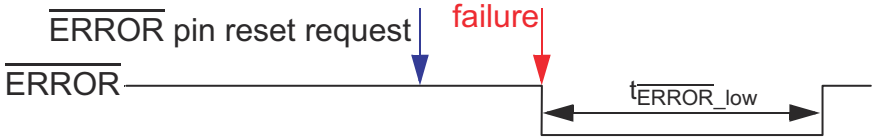

Figure 11-729. $\overline{\text{ERROR}}$ Pin Timing - Example 5

Copyright © 2025 Texas Instruments Incorporated

11.8.8.5.5.3 Forcing an Error Condition

The error response generation mechanism is testable by software by forcing an error condition. This allows testing the $\overline{\text{ERROR}}$ pin functionality. By writing a dedicated key to the error forcing key register (ESMEKR), the $\overline{\text{ERROR}}$ pin is set to low for the specified time. The following steps describe how to force an error condition:

1. Check $\overline{\text{ERROR}}$ Pin Status Register (ESMEPSR). This register must be 1 to switch into the error forcing mode. The ESM module cannot be switched into the error forcing mode if a failure has already been detected in functional mode. The application command to switch to error forcing mode is ignored.
2. Write “1010b” to the error forcing key register (ESMEKR). After that, the $\overline{\text{ERROR}}$ pin should output low (error force mode). Once the application puts the ESM module in the error forcing mode, the $\overline{\text{ERROR}}$ pin cannot indicate the normal error functionality. If a failure occurs during this time, it gets still latched and the LTC is reset and stopped. The error output pin is already driven low on account of the error forcing mode. When the ESM is forced back to normal functional mode, the LTC becomes active and forces the $\overline{\text{ERROR}}$ pin low until the expiration of the LTC.
3. Write “0000” to the error forcing key register (ESMEKR) back to the active normal mode. If there are no errors detected while the ESM module is in the error forcing mode, the $\overline{\text{ERROR}}$ pin goes high immediately after exiting the error forcing mode.

Copyright © 2025 Texas Instruments Incorporated

11.8.8.5.6 Recommended Programming Procedure

During the initialization stage, the application code should follow the recommendations in Figure 11-730 to initialize the ESM.

Once an error occurs, it can trigger an interrupt, $\overline{\text{ERROR}}$ pin outputs low depending on the ESM settings. Once the $\overline{\text{ERROR}}$ pin outputs low, a power on reset or a write of 0x5 to ESMEKR is required to release the ESM back to normal state. The application can read the error status registers (ESMSR1, ESMSR4, ESMSR7, ESMSR2, and ESMSR3) to debug the error. If an $\overline{\text{RST}}$ is triggered or the error interrupt has been served, the error flag of Group2 should be read from ESMSSR2 because the error flag in ESMSR2 will be cleared by $\overline{\text{RST}}$.

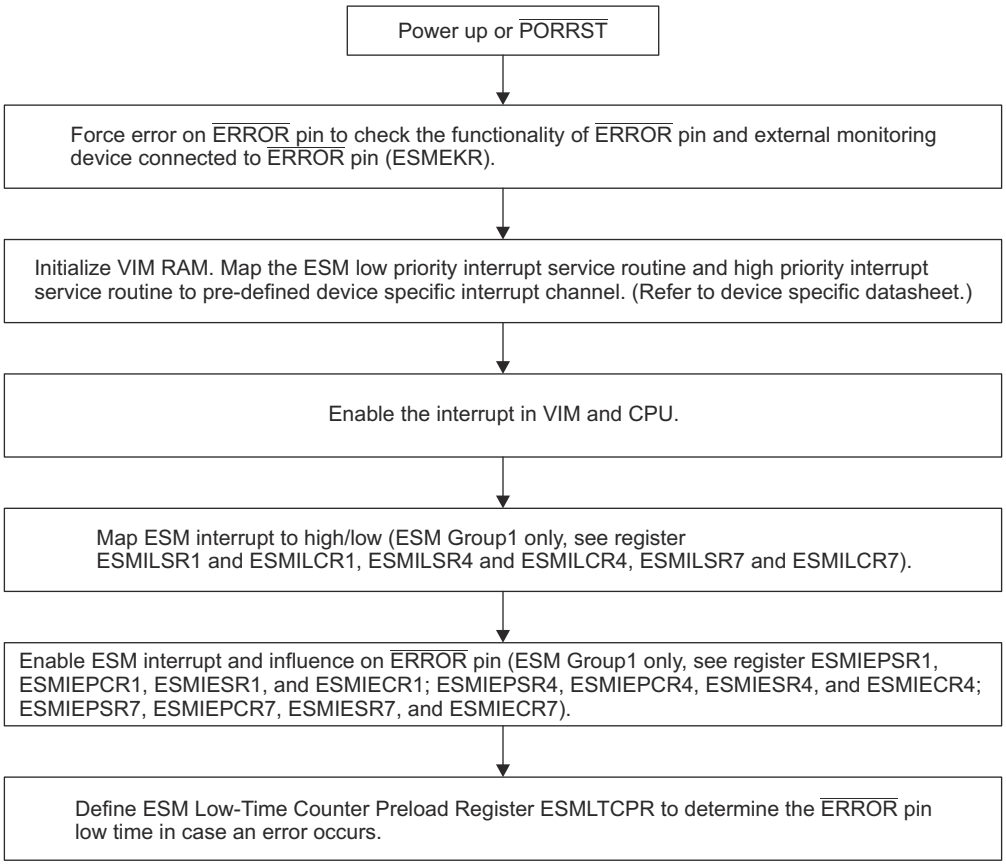

Figure 11-730. ESM Initialization

Copyright © 2025 Texas Instruments Incorporated

11.8.8.5.7 MSS_ESM Registers

Table 11-1963 lists the memory-mapped registers for the MSS_ESM. To determine the base address, refer to the device-specific memory map. The address locations not listed are reserved.

Table 11-1963. MSS_ESM Registers

Offset	Acronym	Register Name	Section
0h	ESMIEPSR1	ESM Enable ERROR Pin Action/Response Register 1	Section 12.8.8.5.7.1
4h	ESMIEPCR1	ESM Disable ERROR Pin Action/Response Register 1	Section 12.8.8.5.7.2
8h	ESMIESR1	ESM Interrupt Enable Set/Status Register 1	Section 12.8.8.5.7.3
Ch	ESMIECR1	ESM Interrupt Enable Clear/Status Register 1	Section 12.8.8.5.7.4
10h	ESMILSR1	Interrupt Level Set/Status Register 1	Section 12.8.8.5.7.5
14h	ESMILCR1	Interrupt Level Clear/Status Register 1	Section 12.8.8.5.7.6
18h	ESMSR1	ESM Status Register 1	Section 12.8.8.5.7.7
1Ch	ESMSR2	ESM Status Register 2	Section 12.8.8.5.7.8
20h	ESMSR3	ESM Status Register 3	Section 12.8.8.5.7.9
24h	ESMEPSR	ESM ERROR Pin Status Register	Section 12.8.8.5.7.10
28h	ESMIOFFHR	ESM Interrupt Offset High Register	Section 12.8.8.5.7.11
2Ch	ESMIOFFLR	ESM Interrupt Offset Low Register	Section 12.8.8.5.7.12
30h	ESMLTCR	ESM Low-Time Counter Register	Section 12.8.8.5.7.13
34h	ESMLTCPR	ESM Low-Time Counter Preload Register	Section 12.8.8.5.7.14
38h	ESMEKR	ESM Error Key Register	Section 12.8.8.5.7.15
3Ch	ESMSSR2	ESM Status Shadow Register 2	Section 12.8.8.5.7.16
40h	ESMIEPSR4	ESM Enable ERROR Pin Action/Response Register 4	Section 12.8.8.5.7.17
44h	ESMIEPCR4	ESM Disable ERROR Pin Action/Response Register 4	Section 12.8.8.5.7.18
48h	ESMIESR4	ESM Interrupt Enable Set/Status Register 4	Section 12.8.8.5.7.19
4Ch	ESMIECR4	ESM Interrupt Enable Clear/Status Register 4	Section 12.8.8.5.7.20
50h	ESMILSR4	Interrupt Level Set/Status Register 4	Section 12.8.8.5.7.21
54h	ESMILCR4	Interrupt Level Clear/Status Register 4	Section 12.8.8.5.7.22
58h	ESMSR4	ESM Status Register 4	Section 12.8.8.5.7.23
80h	ESMIEPSR7	ESM Enable ERROR Pin Action/Response Register 7	Section 12.8.8.5.7.24
84h	ESMIEPCR7	ESM Disable ERROR Pin Action/Response Register 7	Section 12.8.8.5.7.25
88h	ESMIESR7	ESM Interrupt Enable Set/Status Register 7	Section 12.8.8.5.7.26
8Ch	ESMIECR7	ESM Interrupt Enable Clear/Status Register 7	Section 12.8.8.5.7.27
90h	ESMILSR7	Interrupt Level Set/Status Register 7	Section 12.8.8.5.7.28

Copyright © 2025 Texas Instruments Incorporated

Table 11-1963. MSS_ESM Registers (continued)

Offset	Acronym	Register Name	Section
94h	ESMILCR7	Interrupt Level Clear/Status Register 7	Section 12.8.8.5.7.29
98h	ESMSR7	ESM Status Register 7	Section 12.8.8.5.7.30

Complex bit access types are encoded to fit into small table cells. Table 11-1964 shows the codes that are used for access types in this section.

Table 11-1964. MSS_ESM Access Type Codes

Access Type	Code	Description
Read Type		
R	R	Read
Write Type		
W	W	Write
Reset or Default Value		
-n		Value after reset or the default value

Copyright © 2025 Texas Instruments Incorporated

11.8.8.5.7.1 ESMIEPSR1 Register (Offset = 0h) [reset = 0h]

ESMIEPSR1 is shown in Figure 11-731 and described in Table 11-1965.

Return to Summary Table.

ESM Enable ERROR Pin Action/Response Register 1

Figure 11-731. ESMIEPSR1 Register

31	30	29	28	27	26	25	24	23	22	21	20	19	18	17	16	15	14	13	12	11	10	9	8	7	6	5	4	3	2	1	0
IEPSET																															
R/W-0h																															

Table 11-1965. ESMIEPSR1 Register Field Descriptions

Bit	Field	Type	Reset	Description
31-0	IEPSET	R/W	0h	Enable ERROR Pin Action/Response on Group 1. Read in User and Privileged mode. Write in Privileged mode only. 0 Read: Failure on channel x has no influence on ERROR pin. Write: Leaves the bit and the corresponding clear bit in the ESMIEPCR1 register unchanged. 1 Read: Failure on channel x has influence on ERROR pin. Write: Enables failure influence on ERROR pin and sets the corresponding clear bit in the ESMIEPCR1 register.

Copyright © 2025 Texas Instruments Incorporated

11.8.8.5.7.2 ESMIEPCR1 Register (Offset = 4h) [reset = 0h]

ESMIEPCR1 is shown in Figure 11-732 and described in Table 11-1966.

Return to Summary Table.

ESM Disable ERROR Pin Action/Response Register 1

Figure 11-732. ESMIEPCR1 Register

31	30	29	28	27	26	25	24	23	22	21	20	19	18	17	16	15	14	13	12	11	10	9	8	7	6	5	4	3	2	1	0
IEPCLR																															
R/W-0h																															

Table 11-1966. ESMIEPCR1 Register Field Descriptions

Bit	Field	Type	Reset	Description
31-0	IEPCLR	R/W	0h	Disable ERROR Pin Action/Response on Group 1. Read in User and Privileged mode. Write in Privileged mode only. 0 Read: Failure on channel x has no influence on ERROR pin. Write: Leaves the bit and the corresponding set bit in the ESMIEPSR1 register unchanged. 1 Read: Failure on channel x has influence on ERROR pin. Write: Disables failure influence on ERROR pin and clears the corresponding set bit in the ESMIEPSR1 register.

Copyright © 2025 Texas Instruments Incorporated

11.8.8.5.7.3 ESMIESR1 Register (Offset = 8h) [reset = 0h]

ESMIESR1 is shown in Figure 11-733 and described in Table 11-1967.

Return to Summary Table.

ESM Interrupt Enable Set/Status Register 1

Figure 11-733. ESMIESR1 Register

31	30	29	28	27	26	25	24	23	22	21	20	19	18	17	16	15	14	13	12	11	10	9	8	7	6	5	4	3	2	1	0
INTENSET																															
R/W-0h																															

Table 11-1967. ESMIESR1 Register Field Descriptions

Bit	Field	Type	Reset	Description
31-0	INTENSET	R/W	0h	Set interrupt Enable Read in User and Privileged mode. Write in Privileged mode only. 0 Read: Interrupt is disabled. Write: Leaves the bit and the corresponding clear bit in the ESMIECR1 register unchanged. 1 Read: Interrupt is enabled. Write: Enables interrupt and sets the corresponding clear bit in the ESMIECR1 register.

Copyright © 2025 Texas Instruments Incorporated

11.8.8.5.7.4 ESMIECR1 Register (Offset = Ch) [reset = 0h]

ESMIECR1 is shown in Figure 11-734 and described in Table 11-1968.

Return to Summary Table.

ESM Interrupt Enable Clear/Status Register 1

Figure 11-734. ESMIECR1 Register

31	30	29	28	27	26	25	24	23	22	21	20	19	18	17	16	15	14	13	12	11	10	9	8	7	6	5	4	3	2	1	0
INTENCLR																															
R/W-0h																															

Table 11-1968. ESMIECR1 Register Field Descriptions

Bit	Field	Type	Reset	Description
31-0	INTENCLR	R/W	0h	Clear Interrupt Enable Read in User and Privileged mode. Write in Privileged mode only. 0 Read: Interrupt is disabled. Write: Leaves the bit and the corresponding set bit in the ESMIESR1 register unchanged. 1 Read: Interrupt is enabled. Write: Disables interrupt and clears the corresponding set bit in the ESMIESR1 register.

Copyright © 2025 Texas Instruments Incorporated

11.8.8.5.7.5 ESMILSR1 Register (Offset = 10h) [reset = 0h]

ESMILSR1 is shown in Figure 11-735 and described in Table 11-1969.

Return to Summary Table.

Interrupt Level Set/Status Register 1

Figure 11-735. ESMILSR1 Register

31	30	29	28	27	26	25	24	23	22	21	20	19	18	17	16	15	14	13	12	11	10	9	8	7	6	5	4	3	2	1	0
INTLVLSET																															
R/W-0h																															

Table 11-1969. ESMILSR1 Register Field Descriptions

Bit	Field	Type	Reset	Description
31-0	INTLVLSET	R/W	0h	Set Interrupt Priority Read in User and Privileged mode. Write in Privileged mode only. 0 Read: Interrupt of channel x is mapped to low level interrupt line. Write: Leaves the bit and the corresponding clear bit in the ESMILCR1 register unchanged. 1 Read: Interrupt of channel x is mapped to high level interrupt line. Write: Maps interrupt of channel x to high level interrupt line and sets the corresponding clear bit in the ESMILCR1 register.

Copyright © 2025 Texas Instruments Incorporated

11.8.8.5.7.6 ESMILCR1 Register (Offset = 14h) [reset = 0h]

ESMILCR1 is shown in Figure 11-736 and described in Table 11-1970.

Return to Summary Table.

Interrupt Level Clear/Status Register 1

Figure 11-736. ESMILCR1 Register

31	30	29	28	27	26	25	24	23	22	21	20	19	18	17	16	15	14	13	12	11	10	9	8	7	6	5	4	3	2	1	0
INTLVLCLR																															
R/W-0h																															

Table 11-1970. ESMILCR1 Register Field Descriptions

Bit	Field	Type	Reset	Description
31-0	INTLVLCLR	R/W	0h	Clear Interrupt Priority. Read in User and Privileged mode. Write in Privileged mode only. 0 Read: Interrupt of channel x is mapped to low level interrupt line. Write: Leaves the bit and the corresponding set bit in the ESMILSR1 register unchanged. 1 Read: Interrupt of channel x is mapped to high level interrupt line. Write: Maps interrupt of channel x to low level interrupt line and clears the corresponding set bit in the ESMILSR1 register.

Copyright © 2025 Texas Instruments Incorporated

11.8.8.5.7.7 ESMSR1 Register (Offset = 18h) [reset = 0h]

ESMSR1 is shown in Figure 11-737 and described in Table 11-1971.

Return to Summary Table.

ESM Status Register 1

Figure 11-737. ESMSR1 Register

31	30	29	28	27	26	25	24	23	22	21	20	19	18	17	16	15	14	13	12	11	10	9	8	7	6	5	4	3	2	1	0
ESF																															
R/W-0h																															

Table 11-1971. ESMSR1 Register Field Descriptions

Bit	Field	Type	Reset	Description
31-0	ESF	R/W	0h	Error Status Flag. Provides status information on a pending error. Read in User and Privileged mode. Write in Privileged mode only. 0 Read: No error occurred; no interrupt is pending. Write: Leaves the bit unchanged. 1 Read: Error occurred; interrupt is pending. Write: Clears the bit. Note: After nRST, if one of these flags are set and the corresponding interrupt are enabled, the interrupt service routine will be called.

Copyright © 2025 Texas Instruments Incorporated

11.8.8.5.7.8 ESMSR2 Register (Offset = 1Ch) [reset = 0h]

ESMSR2 is shown in Figure 11-738 and described in Table 11-1972.

Return to Summary Table.

ESM Status Register 2

Figure 11-738. ESMSR2 Register

31	30	29	28	27	26	25	24	23	22	21	20	19	18	17	16	15	14	13	12	11	10	9	8	7	6	5	4	3	2	1	0
ESF																															
R/W-0h																															

Table 11-1972. ESMSR2 Register Field Descriptions

Bit	Field	Type	Reset	Description
31-0	ESF	R/W	0h	Error Status Flag. Provides status information on a pending error. Read in User and Privileged mode. Write in Privileged mode only. 0 Read: No error occurred; no interrupt is pending. Write: Leaves the bit unchanged. 1 Read: Error occurred; interrupt is pending. Write: Clears the bit. ESMSSR2 is not impacted by this action. Note: In normal operation the flag gets cleared when reading the appropriate vector in the ESMIOFFHR offset register. Reading ESMIOFFHR will not clear the ESMSR1 and the shadow register ESMSSR2.

Copyright © 2025 Texas Instruments Incorporated

11.8.8.5.7.9 ESMSR3 Register (Offset = 20h) [reset = 0h]

ESMSR3 is shown in Figure 11-739 and described in Table 11-1973.

Return to Summary Table.

ESM Status Register 3

Figure 11-739. ESMSR3 Register

31	30	29	28	27	26	25	24	23	22	21	20	19	18	17	16	15	14	13	12	11	10	9	8	7	6	5	4	3	2	1	0
ESF																															
R/W-0h																															

Table 11-1973. ESMSR3 Register Field Descriptions

Bit	Field	Type	Reset	Description
31-0	ESF	R/W	0h	Error Status Flag. Provides status information on a pending error. Read in User and Privileged mode. Write in Privileged mode only. 0 Read: No error occurred. Write: Leaves the bit unchanged. 1 Read: Error occurred. Write: Clears the bit.

Copyright © 2025 Texas Instruments Incorporated

11.8.8.5.7.10 ESMEPSR Register (Offset = 24h) [reset = 0h]

ESMEPSR is shown in Figure 11-740 and described in Table 11-1974.

Return to Summary Table.

ESM ERROR Pin Status Register

Figure 11-740. ESMEPSR Register

31	30	29	28	27	26	25	24
RESERVED							
R/W-0h							
23	22	21	20	19	18	17	16
RESERVED							
R/W-0h							
15	14	13	12	11	10	9	8
RESERVED							
R/W-0h							
7	6	5	4	3	2	1	0
RESERVED							EPSF
R/W-0h							R/W-0h

Table 11-1974. ESMEPSR Register Field Descriptions

Bit	Field	Type	Reset	Description
31-1	RESERVED	R/W	0h	Read returns 0. Writes have no effect.
0	EPSF	R/W	0h	ERROR Pin Status Flag. Provides status information for the ERROR Pin. Read/Write in User and Privileged mode. 0 Read: ERROR Pin is low (active) if any error has occurred. Write: Writes have no effect. 1 Read: ERROR Pin is high if no error has occurred. Write: Writes have no effect. Note: This flag will be set to 1 after PORRST. The value will be unchanged after nRST. The ERROR pin status remains un-changed during after nRST.

Copyright © 2025 Texas Instruments Incorporated

11.8.8.5.7.11 ESMIOFFHR Register (Offset = 28h) [reset = 0h]

ESMIOFFHR is shown in Figure 11-741 and described in Table 11-1975.

Return to Summary Table.

ESM Interrupt Offset High Register

Figure 11-741. ESMIOFFHR Register

31	30	29	28	27	26	25	24	23	22	21	20	19	18	17	16	15	14	13	12	11	10	9	8	7	6	5	4	3	2	1	0
RESERVED																									INTOFFH						
R/W-0h																									R/W-0h						

Table 11-1975. ESMIOFFHR Register Field Descriptions

Bit	Field	Type	Reset	Description
31-7	RESERVED	R/W	0h	Read returns 0. Writes have no effect.
6-0	INTOFFH	R/W	0h	Offset High Level Interrupt. This vector gives the channel number of the highest pending interrupt request for the high level interrupt line. Interrupts of error Group2 have higher priority than interrupts of error Group1. Inside a group, channel 0 has highest priority and channel 31 has lowest priority. User and privileged mode (read): Returns number of pending interrupt with the highest priority for the high level interrupt line. 0 No pending interrupt. 1h Interrupt pending for channel 0, error Group1. ... 20h Interrupt pending for channel 31, error Group1. 21h Interrupt pending for channel 0, error Group2. ... 40h Interrupt pending for channel 31, error Group2. 41h Interrupt pending for channel 32, error Group1. ... 60h Interrupt pending for channel 63, error Group1. Note: Reading the interrupt vector will clear the corresponding flag in the ESMSR2 register; will not clear ESMSR1 and ESMSSR2 and the offset register gets updated. User and privileged mode (write): Writes have no effect.

Copyright © 2025 Texas Instruments Incorporated

11.8.8.5.7.12 ESMIOFFLR Register (Offset = 2Ch) [reset = 0h]

ESMIOFFLR is shown in Figure 11-742 and described in Table 11-1976.

Return to Summary Table.

ESM Interrupt Offset Low Register

Figure 11-742. ESMIOFFLR Register

31	30	29	28	27	26	25	24	23	22	21	20	19	18	17	16	15	14	13	12	11	10	9	8	7	6	5	4	3	2	1	0
RESERVED																									INTOFFL						
R/W-0h																									R/W-0h						

Table 11-1976. ESMIOFFLR Register Field Descriptions

Bit	Field	Type	Reset	Description
31-7	RESERVED	R/W	0h	Read returns 0. Writes have no effect.
6-0	INTOFFL	R/W	0h	Offset Low Level Interrupt. This vector gives the channel number of the highest pending interrupt request for the low level interrupt line. Inside a group, channel 0 has highest priority and channel 31 has lowest priority. User and privileged mode (read): Returns number of pending interrupt with the highest priority for the low level interrupt line. 0 No pending interrupt. 1h Interrupt pending for channel 0, error Group1. ... 20h Interrupt pending for channel 31, error Group1. 21h Interrupt pending for channel 32, error Group1. ... 60h Interrupt pending for channel 63, error Group1. Note: Reading the interrupt vector will not clear the corresponding flag in the ESMSR1 register. Group2 interrupts are fixed to the high level interrupt line only. User and privileged mode (write): Writes have no effect.

Copyright © 2025 Texas Instruments Incorporated

11.8.8.5.7.13 ESMLTCR Register (Offset = 30h) [reset = 0h]

ESMLTCR is shown in Figure 11-743 and described in Table 11-1977.

Return to Summary Table.

ESM Low-Time Counter Register

Figure 11-743. ESMLTCR Register

31	30	29	28	27	26	25	24	23	22	21	20	19	18	17	16	15	14	13	12	11	10	9	8	7	6	5	4	3	2	1	0
RESERVED																LTCP															
R/W-0h																R/W-0h															

Table 11-1977. ESMLTCR Register Field Descriptions

Bit	Field	Type	Reset	Description
31-16	RESERVED	R/W	0h	Read returns 0. Writes have no effect.
15-0	LTCP	R/W	0h	ERROR Pin Low-Time Counter 16bit pre-loadable down-counter to control low-time of ERROR pin. The low-time counter is triggered by the peripheral clock (VCLK). Note: Low time counter is set to the default preload value of the ESMLTCPR in the following cases: 1. Reset (power on reset or warm reset) 2. An error occurs 3. User forces an error

Copyright © 2025 Texas Instruments Incorporated

11.8.8.5.7.14 ESMLTCPR Register (Offset = 34h) [reset = 0h]

ESMLTCPR is shown in Figure 11-744 and described in Table 11-1978.

Return to Summary Table.

ESM Low-Time Counter Preload Register

Figure 11-744. ESMLTCPR Register

31	30	29	28	27	26	25	24	23	22	21	20	19	18	17	16	15	14	13	12	11	10	9	8	7	6	5	4	3	2	1	0
RESERVED																LTCP															
R/W-0h																R/W-0h															

Table 11-1978. ESMLTCPR Register Field Descriptions

Bit	Field	Type	Reset	Description
31-16	RESERVED	R/W	0h	Read returns 0. Writes have no effect.
15-0	LTCP	R/W	0h	ERROR Pin Low-Time Counter Pre-load Value 16bit pre-load value for the ERROR pin low-time counter. Note: Only LTCP.15 and LTCP.14 are configurable (privileged mode write).

Copyright © 2025 Texas Instruments Incorporated

11.8.8.5.7.15 ESMEKR Register (Offset = 38h) [reset = 0h]

ESMEKR is shown in Figure 11-745 and described in Table 11-1979.

Return to Summary Table.

ESM Error Key Register

Figure 11-745. ESMEKR Register

31	30	29	28	27	26	25	24	23	22	21	20	19	18	17	16	15	14	13	12	11	10	9	8	7	6	5	4	3	2	1	0
RESERVED																												EKEY			
R/W-0h																												R/W-0h			

Table 11-1979. ESMEKR Register Field Descriptions

Bit	Field	Type	Reset	Description
31-4	RESERVED	R/W	0h	Read returns 0. Writes have no effect.
3-0	EKEY	R/W	0h	Error Key. The key to reset the ERROR pin or to force an error on the ERROR pin. User and privileged mode (read): Returns current value of the EKEY. Privileged mode (write): 0 Activates normal mode (recommended default mode). Ah Forces error on ERROR pin. 5h The ERROR pin set to high when the low time counter (LTC) has completed; then the EKEY bit will switch back to normal mode (EKEY = 0000) All other values Activates normal mode.

Copyright © 2025 Texas Instruments Incorporated

11.8.8.5.7.16 ESMSSR2 Register (Offset = 3Ch) [reset = 0h]

ESMSSR2 is shown in Figure 11-746 and described in Table 11-1980.

Return to Summary Table.

ESM Status Shadow Register 2

Figure 11-746. ESMSSR2 Register

31	30	29	28	27	26	25	24	23	22	21	20	19	18	17	16	15	14	13	12	11	10	9	8	7	6	5	4	3	2	1	0
ESF																															
R/W-0h																															

Table 11-1980. ESMSSR2 Register Field Descriptions

Bit	Field	Type	Reset	Description
31-0	ESF	R/W	0h	Error Status Flag. Shadow register for status information on pending error. Read in User and Privileged mode. Write in Privileged mode only. 0 Read: No error occurred. Write: Leaves the bit unchanged. 1 Read: Error occurred. Write: Clears the bit. ESMSR2 is not impacted by this action. Note: Errors are stored until they are cleared by the software or at power-on reset (PORRST).

Copyright © 2025 Texas Instruments Incorporated

11.8.8.5.7.17 ESMIEPSR4 Register (Offset = 40h) [reset = 0h]

ESMIEPSR4 is shown in Figure 11-747 and described in Table 11-1981.

Return to Summary Table.

ESM Enable ERROR Pin Action/Response Register 4

Figure 11-747. ESMIEPSR4 Register

31	30	29	28	27	26	25	24	23	22	21	20	19	18	17	16	15	14	13	12	11	10	9	8	7	6	5	4	3	2	1	0
IEPSET																															
R/W-0h																															

Table 11-1981. ESMIEPSR4 Register Field Descriptions

Bit	Field	Type	Reset	Description
31-0	IEPSET	R/W	0h	Enable ERROR Pin Action/Response on Group 1. Read in User and Privileged mode. Write in Privileged mode only. 0 Read: Failure on channel x has no influence on ERROR pin. Write: Leaves the bit and the corresponding clear bit in the ESMIEPCR4 register unchanged. 1 Read: Failure on channel x has influence on ERROR pin. Write: Enables failure influence on ERROR pin and sets the corresponding clear bit in the ESMIEPCR4 register.

Copyright © 2025 Texas Instruments Incorporated

11.8.8.5.7.18 ESMIEPCR4 Register (Offset = 44h) [reset = 0h]

ESMIEPCR4 is shown in Figure 11-748 and described in Table 11-1982.

Return to Summary Table.

ESM Disable ERROR Pin Action/Response Register 4

Figure 11-748. ESMIEPCR4 Register

31	30	29	28	27	26	25	24	23	22	21	20	19	18	17	16	15	14	13	12	11	10	9	8	7	6	5	4	3	2	1	0
IEPCLR																															
R/W-0h																															

Table 11-1982. ESMIEPCR4 Register Field Descriptions

Bit	Field	Type	Reset	Description
31-0	IEPCLR	R/W	0h	Disable ERROR Pin Action/Response on Group 1. Read in User and Privileged mode. Write in Privileged mode only. 0 Read: Failure on channel x has no influence on ERROR pin. Write: Leaves the bit and the corresponding set bit in the ESMIEPSR4 register unchanged. 1 Read: Failure on channel x has influence on ERROR pin. Write: Disables failure influence on ERROR pin and clears the corresponding set bit in the ESMIEPSR4 register.

Copyright © 2025 Texas Instruments Incorporated

11.8.8.5.7.19 ESMIESR4 Register (Offset = 48h) [reset = 0h]

ESMIESR4 is shown in Figure 11-749 and described in Table 11-1983.

Return to Summary Table.

ESM Interrupt Enable Set/Status Register 4

Figure 11-749. ESMIESR4 Register

31	30	29	28	27	26	25	24	23	22	21	20	19	18	17	16	15	14	13	12	11	10	9	8	7	6	5	4	3	2	1	0
INTENSET																															
R/W-0h																															

Table 11-1983. ESMIESR4 Register Field Descriptions

Bit	Field	Type	Reset	Description
31-0	INTENSET	R/W	0h	Set interrupt Enable Read in User and Privileged mode. Write in Privileged mode only. 0 Read: Interrupt is disabled. Write: Leaves the bit and the corresponding clear bit in the ESMIECR4 register unchanged. 1 Read: Interrupt is enabled. Write: Enables interrupt and sets the corresponding clear bit in the ESMIECR4 register.

Copyright © 2025 Texas Instruments Incorporated

11.8.8.5.7.20 ESMIECR4 Register (Offset = 4Ch) [reset = 0h]

ESMIECR4 is shown in Figure 11-750 and described in Table 11-1984.

Return to Summary Table.

ESM Interrupt Enable Clear/Status Register 4

Figure 11-750. ESMIECR4 Register

31	30	29	28	27	26	25	24	23	22	21	20	19	18	17	16	15	14	13	12	11	10	9	8	7	6	5	4	3	2	1	0
INTENCLR																															
R/W-0h																															

Table 11-1984. ESMIECR4 Register Field Descriptions

Bit	Field	Type	Reset	Description
31-0	INTENCLR	R/W	0h	Clear Interrupt Enable Read in User and Privileged mode. Write in Privileged mode only. 0 Read: Interrupt is disabled. Write: Leaves the bit and the corresponding set bit in the ESMIESR4 register unchanged. 1 Read: Interrupt is enabled. Write: Disables interrupt and clears the corresponding set bit in the ESMIESR4 register.

Copyright © 2025 Texas Instruments Incorporated

11.8.8.5.7.21 ESMILSR4 Register (Offset = 50h) [reset = 0h]

ESMILSR4 is shown in Figure 11-751 and described in Table 11-1985.

Return to Summary Table.

Interrupt Level Set/Status Register 4

Figure 11-751. ESMILSR4 Register

31	30	29	28	27	26	25	24	23	22	21	20	19	18	17	16	15	14	13	12	11	10	9	8	7	6	5	4	3	2	1	0
INTLVLSET																															
R/W-0h																															

Table 11-1985. ESMILSR4 Register Field Descriptions

Bit	Field	Type	Reset	Description
31-0	INTLVLSET	R/W	0h	Set Interrupt Priority Read in User and Privileged mode. Write in Privileged mode only. 0 Read: Interrupt of channel x is mapped to low level interrupt line. Write: Leaves the bit and the corresponding clear bit in the ESMILCR4 register unchanged. 1 Read: Interrupt of channel x is mapped to high level interrupt line. Write: Maps interrupt of channel x to high level interrupt line and sets the corresponding clear bit in the ESMILCR4 register.

Copyright © 2025 Texas Instruments Incorporated

11.8.8.5.7.22 ESMILCR4 Register (Offset = 54h) [reset = 0h]

ESMILCR4 is shown in Figure 11-752 and described in Table 11-1986.

Return to Summary Table.

Interrupt Level Clear/Status Register 4

Figure 11-752. ESMILCR4 Register

31	30	29	28	27	26	25	24	23	22	21	20	19	18	17	16	15	14	13	12	11	10	9	8	7	6	5	4	3	2	1	0
INTLVLCLR																															
R/W-0h																															

Table 11-1986. ESMILCR4 Register Field Descriptions

Bit	Field	Type	Reset	Description
31-0	INTLVLCLR	R/W	0h	Clear Interrupt Priority. Read in User and Privileged mode. Write in Privileged mode only. 0 Read: Interrupt of channel x is mapped to low level interrupt line. Write: Leaves the bit and the corresponding set bit in the ESMILSR4 register unchanged. 1 Read: Interrupt of channel x is mapped to high level interrupt line. Write: Maps interrupt of channel x to low level interrupt line and clears the corresponding set bit in the ESMILSR4 register.

Copyright © 2025 Texas Instruments Incorporated

11.8.8.5.7.23 ESMSR4 Register (Offset = 58h) [reset = 0h]

ESMSR4 is shown in Figure 11-753 and described in Table 11-1987.

Return to Summary Table.

ESM Status Register 4

Figure 11-753. ESMSR4 Register

31	30	29	28	27	26	25	24	23	22	21	20	19	18	17	16	15	14	13	12	11	10	9	8	7	6	5	4	3	2	1	0
ESF																															
R/W-0h																															

Table 11-1987. ESMSR4 Register Field Descriptions

Bit	Field	Type	Reset	Description
31-0	ESF	R/W	0h	Error Status Flag. Provides status information on a pending error. Read in User and Privileged mode. Write in Privileged mode only. 0 Read: No error occurred; no interrupt is pending. Write: Leaves the bit unchanged. 1 Read: Error occurred; interrupt is pending. Write: Clears the bit. Note: After nRST, if one of these flags are set and the corresponding interrupt are enabled, the interrupt service routine will be called.

Copyright © 2025 Texas Instruments Incorporated

11.8.8.5.7.24 ESMIEPSR7 Register (Offset = 80h) [reset = 0h]

ESMIEPSR7 is shown in Figure 11-754 and described in Table 11-1988.

Return to Summary Table.

ESM Enable ERROR Pin Action/Response Register 7

Figure 11-754. ESMIEPSR7 Register

31	30	29	28	27	26	25	24	23	22	21	20	19	18	17	16	15	14	13	12	11	10	9	8	7	6	5	4	3	2	1	0
IEPSET																															
R/W-0h																															

Table 11-1988. ESMIEPSR7 Register Field Descriptions

Bit	Field	Type	Reset	Description
31-0	IEPSET	R/W	0h	Enable ERROR Pin Action/Response on Group 1. Read in User and Privileged mode. Write in Privileged mode only. 0 Read: Failure on channel x has no influence on ERROR pin. Write: Leaves the bit and the corresponding clear bit in the ESMIEPCR7 register unchanged. 1 Read: Failure on channel x has influence on ERROR pin. Write: Enables failure influence on ERROR pin and sets the corresponding clear bit in the ESMIEPCR7 register.

Copyright © 2025 Texas Instruments Incorporated

11.8.8.5.7.25 ESMIEPCR7 Register (Offset = 84h) [reset = 0h]

ESMIEPCR7 is shown in Figure 11-755 and described in Table 11-1989.

Return to Summary Table.

ESM Disable ERROR Pin Action/Response Register 7

Figure 11-755. ESMIEPCR7 Register

31	30	29	28	27	26	25	24	23	22	21	20	19	18	17	16	15	14	13	12	11	10	9	8	7	6	5	4	3	2	1	0
IEPCLR																															
R/W-0h																															

Table 11-1989. ESMIEPCR7 Register Field Descriptions

Bit	Field	Type	Reset	Description
31-0	IEPCLR	R/W	0h	Disable ERROR Pin Action/Response on Group 1. Read in User and Privileged mode. Write in Privileged mode only. 0 Read: Failure on channel x has no influence on ERROR pin. Write: Leaves the bit and the corresponding set bit in the ESMIEPSR7 register unchanged. 1 Read: Failure on channel x has influence on ERROR pin. Write: Disables failure influence on ERROR pin and clears the corresponding set bit in the ESMIEPSR7 register.

Copyright © 2025 Texas Instruments Incorporated

11.8.8.5.7.26 ESMIESR7 Register (Offset = 88h) [reset = 0h]

ESMIESR7 is shown in Figure 11-756 and described in Table 11-1990.

Return to Summary Table.

ESM Interrupt Enable Set/Status Register 7

Figure 11-756. ESMIESR7 Register

31	30	29	28	27	26	25	24	23	22	21	20	19	18	17	16	15	14	13	12	11	10	9	8	7	6	5	4	3	2	1	0
INTENSET																															
R/W-0h																															

Table 11-1990. ESMIESR7 Register Field Descriptions

Bit	Field	Type	Reset	Description
31-0	INTENSET	R/W	0h	Set interrupt Enable Read in User and Privileged mode. Write in Privileged mode only. 0 Read: Interrupt is disabled. Write: Leaves the bit and the corresponding clear bit in the ESMIECR7 register unchanged. 1 Read: Interrupt is enabled. Write: Enables interrupt and sets the corresponding clear bit in the ESMIECR7 register.

Copyright © 2025 Texas Instruments Incorporated

11.8.8.5.7.27 ESMIECR7 Register (Offset = 8Ch) [reset = 0h]

ESMIECR7 is shown in Figure 11-757 and described in Table 11-1991.

Return to Summary Table.

ESM Interrupt Enable Clear/Status Register 7

Figure 11-757. ESMIECR7 Register

31	30	29	28	27	26	25	24	23	22	21	20	19	18	17	16	15	14	13	12	11	10	9	8	7	6	5	4	3	2	1	0
INTENCLR																															
R/W-0h																															

Table 11-1991. ESMIECR7 Register Field Descriptions

Bit	Field	Type	Reset	Description
31-0	INTENCLR	R/W	0h	Clear Interrupt Enable Read in User and Privileged mode. Write in Privileged mode only. 0 Read: Interrupt is disabled. Write: Leaves the bit and the corresponding set bit in the ESMIESR7 register unchanged. 1 Read: Interrupt is enabled. Write: Disables interrupt and clears the corresponding set bit in the ESMIESR7 register.

Copyright © 2025 Texas Instruments Incorporated

11.8.8.5.7.28 ESMILSR7 Register (Offset = 90h) [reset = 0h]

ESMILSR7 is shown in Figure 11-758 and described in Table 11-1992.

Return to Summary Table.

Interrupt Level Set/Status Register 7

Figure 11-758. ESMILSR7 Register

31	30	29	28	27	26	25	24	23	22	21	20	19	18	17	16	15	14	13	12	11	10	9	8	7	6	5	4	3	2	1	0
INTLVLSET																															
R/W-0h																															

Table 11-1992. ESMILSR7 Register Field Descriptions

Bit	Field	Type	Reset	Description
31-0	INTLVLSET	R/W	0h	Set Interrupt Priority Read in User and Privileged mode. Write in Privileged mode only. 0 Read: Interrupt of channel x is mapped to low level interrupt line. Write: Leaves the bit and the corresponding clear bit in the ESMILCR7 register unchanged. 1 Read: Interrupt of channel x is mapped to high level interrupt line. Write: Maps interrupt of channel x to high level interrupt line and sets the corresponding clear bit in the ESMILCR7 register.

Copyright © 2025 Texas Instruments Incorporated

11.8.8.5.7.29 ESMILCR7 Register (Offset = 94h) [reset = 0h]

ESMILCR7 is shown in Figure 11-759 and described in Table 11-1993.

Return to Summary Table.

Interrupt Level Clear/Status Register 7

Figure 11-759. ESMILCR7 Register

31	30	29	28	27	26	25	24	23	22	21	20	19	18	17	16	15	14	13	12	11	10	9	8	7	6	5	4	3	2	1	0
INTLVLCLR																															
R/W-0h																															

Table 11-1993. ESMILCR7 Register Field Descriptions

Bit	Field	Type	Reset	Description
31-0	INTLVLCLR	R/W	0h	Clear Interrupt Priority. Read in User and Privileged mode. Write in Privileged mode only. 0 Read: Interrupt of channel x is mapped to low level interrupt line. Write: Leaves the bit and the corresponding set bit in the ESMILSR7 register unchanged. 1 Read: Interrupt of channel x is mapped to high level interrupt line. Write: Maps interrupt of channel x to low level interrupt line and clears the corresponding set bit in the ESMILSR7 register.

Copyright © 2025 Texas Instruments Incorporated

11.8.8.5.7.30 ESMSR7 Register (Offset = 98h) [reset = 0h]

ESMSR7 is shown in Figure 11-760 and described in Table 11-1994.

Return to Summary Table.

ESM Status Register 7

Figure 11-760. ESMSR7 Register

31	30	29	28	27	26	25	24	23	22	21	20	19	18	17	16	15	14	13	12	11	10	9	8	7	6	5	4	3	2	1	0
ESF																															
R/W-0h																															

Table 11-1994. ESMSR7 Register Field Descriptions

Bit	Field	Type	Reset	Description
31-0	ESF	R/W	0h	Error Status Flag. Provides status information on a pending error. Read in User and Privileged mode. Write in Privileged mode only. 0 Read: No error occurred; no interrupt is pending. Write: Leaves the bit unchanged. 1 Read: Error occurred; interrupt is pending. Write: Clears the bit. Note: After nRST, if one of these flags are set and the corresponding interrupt are enabled, the interrupt service routine will be called.

11.8.8.6 Cyclic Redudancy Check (CRC)

This section describes the cyclic redundancy check (CRC) controller module. Presently two CRC modules have been instantiated in the TRP1x one for MSS and another for DSS.

11.8.8.6.1 Overview

The CRC controller is a module that is used to perform CRC (Cyclic Redundancy Check) to verify the integrity of memory system. A signature representing the contents of the memory is obtained when the contents of the memory are read into CRC controller. The responsibility of CRC controller is to calculate the signature for a set of data and then compare the calculated signature value against a pre-determined good signature value. CRC controller supports two channels to perform CRC calculation on multiple memories in parallel and can be used on any memory system.

11.8.8.6.2 Features

The CRC controller offers:

- Two channels to perform background signature verification on any memory sub-system.
- Data compression on 8, 16, 32, and 64-bit data size.
- Maximum-length PSA (Parallel Signature Analysis) register constructed based on 64-bit primitive polynomial.
- Each channel has a CRC Value Register that contains the pre-determined CRC value.
- Use timed base event trigger from timer to initiate DMA data transfer.
- Programmable 20-bit pattern counter per channel to count the number of data patterns for compression.
- Three modes of operation. Auto, Semi-CPU and Full-CPU.
- For each channel, CRC can be performed either by CRC Controller or by CPU.
- Automatically perform signature verification without CPU intervention in AUTO mode.
- Generate interrupt to CPU in Semi-CPU mode to allow CPU to perform signature verification itself.
- Generate CRC fail interrupt in AUTO mode if signature verification fails.
- Generate Timeout interrupt if CRC is not performed within the time limit.
- Generate DMA request per channel to initiate CRC value transfer.

11.8.8.6.3 Block Diagram

Figure 11-761 shows a block diagram of the CRC controller.

Copyright © 2025 Texas Instruments Incorporated

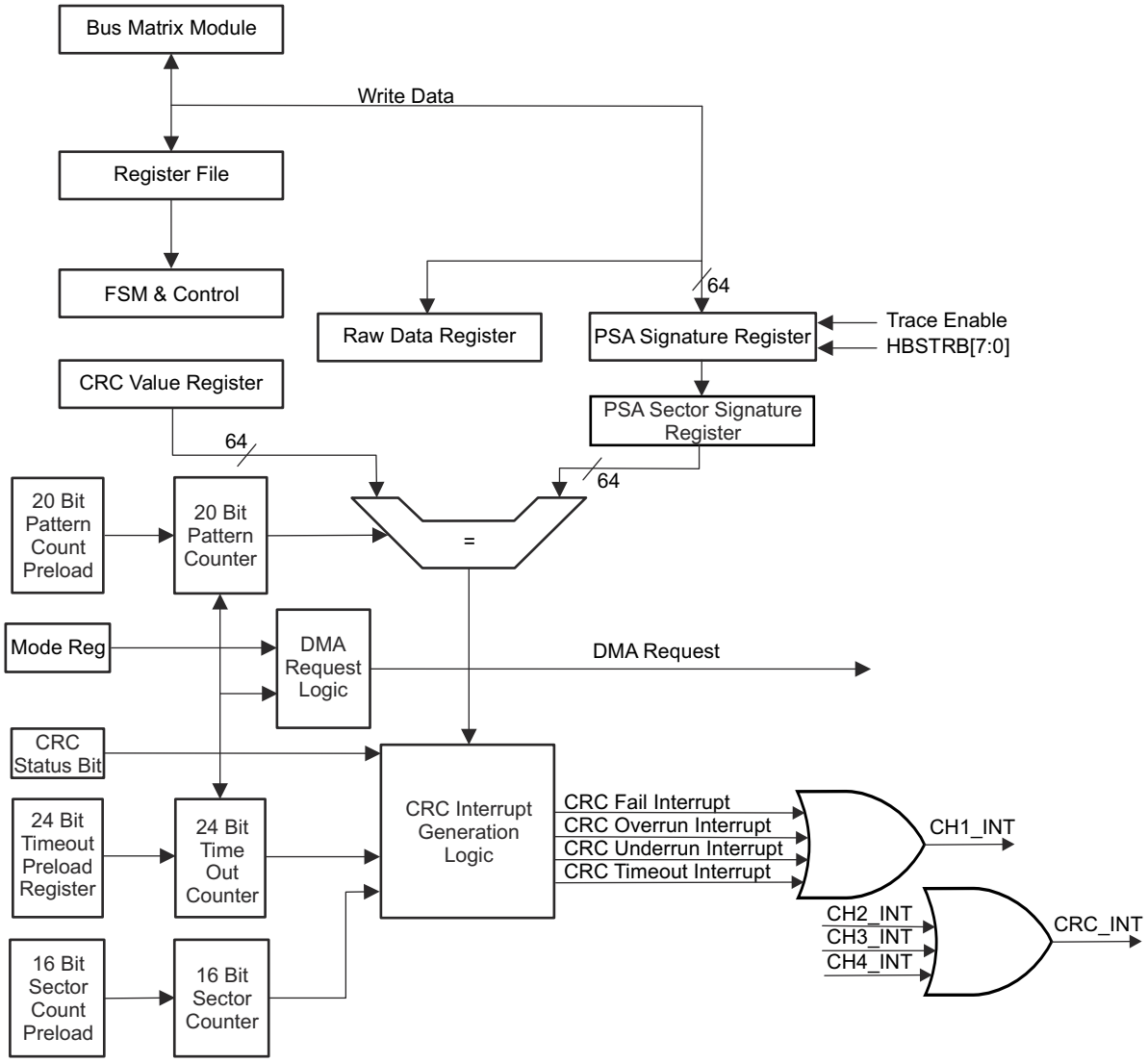

Figure 11-761. CRC Controller Block Diagram For One Channel

Copyright © 2025 Texas Instruments Incorporated

11.8.8.6.4 Module Operation

11.8.8.6.4.1 General Operation

There are two channels in CRC controller, and for each channel there is a memory-mapped PSA (Parallel Signature Analysis) Signature Register and a memory-mapped CRC (Cyclic Redundancy Check) Value Register. A memory can be organized into multiple sectors with each sector consisting of multiple data patterns. A data pattern can be 8-, 16-, 32-, or 64-bit data. CRC module performs the signature calculation and compares the signature to a pre-determined value. The PSA Signature Register compresses an incoming data pattern into a signature when it is written. When one sector of data patterns are written into PSA Signature Register, a final signature corresponding to the sector is obtained. CRC Value Register stores the pre-determined signature corresponding to one sector of data patterns. The calculated signature and the pre-determined signature are then compared to each other for signature verification. To minimize CPU's involvement, data patterns transfer can be carried out at the background of CPU using DMA controller. DMA is setup to transfer data from memory from which the contents to be verified to the memory mapped PSA Signature Register. When DMA transfers data to the memory mapped PSA Signature Register, a signature is generated. A programmable 20-bit data pattern counter is used for each channel to define the number of data patterns to calculate for each sector. Signature verification can be performed automatically by CRC controller in AUTO mode or by CPU itself in Semi-CPU or Full-CPU mode. In AUTO mode, a self sustained CRC signature calculation can be achieved without any CPU intervention.

11.8.8.6.4.2 CRC Modes of Operation

CRC Controller can operate in AUTO, Semi-CPU, and Full-CPU modes.

11.8.8.6.4.2.1 AUTO Mode

In AUTO mode, CRC Controller in conjunction with DMA controller can perform CRC without CPU intervention. A sustained transfer of data to both the PSA Signature Register and CRC Value Register are performed in the background of CPU. When a mismatch is detected, an interrupt is generated to CPU. A 16-bit current sector ID register is provided to identify which sector causes a CRC failure.

11.8.8.6.4.2.2 Semi-CPU Mode

In Semi-CPU mode, DMA controller is also utilized to perform data patterns transfer to PSA Signature Register. Instead of performing signature verification automatically, the CRC controller generates an compression complete interrupt to CPU after each sector is compressed. Upon responding to the interrupt the CPU performs the signature verification by reading the calculated signature stored at the PSA Sector Signature Register, and compares it to a pre-determined CRC value.

11.8.8.6.4.2.3 Full CPU Mode

In Full-CPU mode, the CPU does the data patterns transfer and signature verification all by itself. When CPU has enough throughput, it can perform data patterns transfer by reading data from the memory system to the PSA Signature Register. After certain number of data patterns are compressed, the CPU can read from the PSA Signature Register and compare the calculated signature to the pre-determined CRC signature value. In Full-CPU mode, neither interrupt nor DMA request is generated. All counters are also disabled.

Copyright © 2025 Texas Instruments Incorporated

11.8.8.6.4.3 PSA Signature Register

The 64-bit PSA Signature Register is based on the primitive polynomial (as in the following equation) to produce the maximum length LFSR (Linear Feedback Shift Register), as shown in Figure 11-762.

$$f(x) = x^{64} + x^4 + x^3 + x + 1 \quad (14)$$

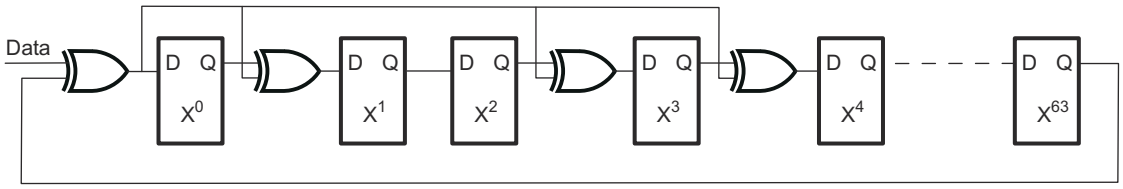

Figure 11-762. Linear Feedback Shift Register (LFSR)

The serial implementation of LFSF has a limitation that, it requires ‘n’ clock cycles to calculate the CRC values for an ‘n’ bit data stream. The idea is to produce the same CRC value operating on a multi-bit data stream, as would occur if the CRC were computed one bit at a time over the whole data stream. The algorithm involves looping to simulate the shifting, and concatenating strings to build the equations after ‘n’ shift.

The parallel CRC calculation based on the polynomial can be illustrated in the following HDL code:

```
for i in 63 to 0 loop
   NEXT_CRC_VAL(0) := CRC_VAL(63) xor DATA(i);
     for j in 1 to 63 loop
       case j is
          when 1|3|4 =>
               NEXT_CRC_VAL(j) :=
                   CRC_VAL(j - 1) xor CRC_VAL(63) xor DATA(i);
          when others =>
               NEXT_CRC_VAL(j) := CRC_VAL(j - 1);
       end case;
     end loop;
   CRC_VAL := NEXT_CRC_VAL;
end loop;
```

Note

1) The inner loop is to calculate the next value of each shift register bit after one cycle

2) The outer loop is to simulate 64 cycles of shifting. The equation for each shift register bit is thus built before it is compressed into the shift register.

3) MSB of the DATA is shifted in first

There is one PSA Signature Register per CRC channel. PSA Signature Register can be both read and written. When it is written, it can either compress the data or just capture the data depending on the state of CHx_MODE bits. If CHx_MODE=Data Capture, a seed value can be planted in the PSA Signature Register without compression. Other modes other than Data Capture will result with the data compressed by PSA Signature Register when it is written. Each channel can be planted with different seed value before compression starts. When PSA Signature Register is read, it gives the calculated signature.

CRC Controller should be used in conjunction with the on chip DMA controller to produce optimal system performance. The incoming data pattern to PSA Signature Register is typically initiated by the DMA controller. When DMA is properly setup, it would read data from the pre-determined memory system and write them to the memory mapped PSA Signature Register. Each time PSA Signature Register is written a signature is generated.

Copyright © 2025 Texas Instruments Incorporated

CPU itself can also perform data transfer by reading from the memory system and perform write operation to PSA Signature Register if CPU has enough throughput to handle data patterns transfer.

After system reset and when AUTO mode is enabled, CRC Controller automatically generates a DMA request to request the pre-determined CRC value corresponding to the first sector of memory to be checked.

In AUTO mode, when one sector of data patterns is compressed, the signature stored at the PSA Signature Register is first copied to the PSA Sector Signature Register and PSA Signature Register is then cleared out to all zeros. An automatic signature verification is then performed by comparing the signature stored at the PSA Sector Signature Register to the CRC Value Register. After the comparison the CRC Controller can generate a DMA request. Upon receiving the DMA request the DMA controller will update the CRC Value Register by transferring the next pre-determined signature value associated with the next sector of memory system. If the signature verification fails then CRC Controller can generate a CRC fail interrupt.

In Full-CPU mode, no DMA request and interrupt are generated at all. The number of data patterns to be compressed is determined by CPU itself. Full-CPU mode is useful when DMA controller is not available to perform background data patterns transfer. The OS can periodically generate a software interrupt to CPU and use CPU to accomplish data transfer and signature verification.

CRC Controller supports doubleword, word, half word and byte access to the PSA Signature Register. During a non-doubleword write access, all unwritten byte lanes are padded with zero’s before compression. Note that comparison between PSA Sector Signature Register and CRC Value Register is always in 64 bit because a compressed value is always expressed in 64 bit.

There is a software reset per channel for PSA Signature Register. When set, the PSA Signature Register is reset to all zeros.

PSA Signature Register is reset to zero under the following conditions:

- System reset
- PSA Software reset
- One sector of data patterns are compressed

11.8.8.6.4.4 PSA Sector Signature Register

After one sector of data is compressed, the final resulting signature calculated by PSA Signature Register is transferred to the PSA Sector Signature Register. PSA Signature Register is a read only register. During Semi-CPU mode, the host CPU should read from the PSA Sector Signature Register instead of reading from PSA Signature Register for signature verification to avoid data coherency issue. The PSA Signature Register can be updated with new signature before the host CPU is able to retrieve it.

In Semi-CPU mode, no DMA request is generated. When one sector of data patterns is compressed, CRC controller first generates a compression complete interrupt. Responding to the interrupt, CPU will in the ISR read the PSA Sector Signature Register and compare it to the known good signature or write the signature value to another memory location to build a signature file. In Semi-CPU mode, CPU must perform the signature verification in a manner to prevent any overrun condition. The overrun condition occurs when the compression complete interrupt is generated after one sector of data patterns is compressed and CPU has not read from the PSA Sector Signature Register to perform necessary signature verification before PSA Sector Signature Register is overridden with a new value. An overrun interrupt can be enable to generate when overrun condition occurs. During Semi-CPU mode, the host CPU should read from the PSA Sector Signature Register instead of reading from PSA Signature Register for signature verification to avoid data coherency issue. The PSA Signature Register can be updated with new signature before the host CPU is able to retrieve it.

Copyright © 2025 Texas Instruments Incorporated

11.8.8.6.4.5 CRC Value Register

Associated with each channel there is a CRC Value Register. The CRC Value Register stores the pre-determined CRC value. After one sector of data patterns is compressed by PSA Signature Register, CRC Controller can automatically compare the resulting signature stored at the PSA Sector Signature Register with the pre-determined value stored at the CRC Value Register if AUTO mode is enabled. If the signature verification fails, CRC Controller can be enabled to generate an CRC fail interrupt. When the channel is set up for Semi-CPU mode, CRC controller first generates a compression complete interrupt to CPU. Upon servicing the interrupt, CPU will then read the PSA Sector Signature Register and then read the corresponding CRC value stored at another location and compare them. CPU should not read from the CRC Value Register during Semi-CPU or Full-CPU mode because the CRC Value Register is not updated during these two modes.

In AUTO mode, for first sector's signature, DMA request is generated when mode is programmed to AUTO. For subsequent sectors, DMA request is generated after each sector is compressed. Responding to the DMA request, DMA controller reloads the CRC Value Register for the next sector of memory system to be checked.

When CRC Value Register is updated with a new CRC value, an internal flag is set to indicate that CRC Value Register contains the most current value. This flag is cleared when CRC comparison is performed. Each time at the end of the final data pattern compression of a sector, CRC Controller first checks to see if the corresponding CRC Value Register has the most current CRC value stored in it by polling the flag. If the flag is set then the CRC comparison can be performed. If the flag is not set then it means the CRC Value Register contains stale information. A CRC underrun interrupt is generated. When an underrun condition is detected, signature verification is not performed.

CRC Controller supports doubleword, word, half word and byte access to the CRC Value Register. As noted before comparison between PSA Sector Signature Register and CRC Value Register during AUTO mode is carried out in 64 bit.

11.8.8.6.4.6 Raw Data Register

The raw or un-compressed data written to the PSA Signature Register is also saved in the Raw Data Register. This register is read only.

11.8.8.6.4.7 Example DMA Controller Setup

DMA controller needs to be setup properly in either either AUTO or Semi-CPU mode as DMA controller is used to transfer data patterns. Hardware or a combination of hardware and software DMA triggering are supported.

11.8.8.6.4.7.1 AUTO Mode Using Hardware Timer Trigger

There are two DMA channels associated with each CRC channel when in AUTO mode. One DMA channel is setup to transfer data patterns from the source memory to the PSA Signature Register. The second DMA channel is setup to transfer the pre-determined signature to the CRC Value Register. The trigger source for the first DMA channel can be either by hardware or by software. As illustrated in Figure 11-763 a timer can be used to trigger a DMA request to initiate transfer from the source memory system to PSA Signature Register. In AUTO mode, CRC Controller also generates DMA request after one sector of data patterns is compressed to initiate transfer of the next CRC value corresponding to the next sector of memory. Thus a new CRC value is always updated in the CRC Value Register by DMA synchronized to each sector of memory.

A block of memory system is usually divided into many sectors. All sectors are the same size. The sector size is programmed in the CRC_PCOUNT_REGx and the number of sectors in one block is programmed in the CRC_SCOUNT_REGx of the respective channel. CRC_PCOUNT_REGx multiplies CRC_SCOUNT_REGx and multiplies transfer size of each data pattern should give the total block size in number of bytes.

The total size of the memory system to be examined is also programmed in the respective transfer count register inside DMA module. The DMA transfer count register is divided into two parts. They are element count and frame count. Note that an HW DMA request can be programmed to trigger either one frame or one entire block transfer. In Figure 11-763, an HW DMA request from a timer is used as a trigger source to initiate DMA transfer. If all two CRC channels are active in AUTO mode then a total of two DMA requests would be generated by CRC Controller.

Copyright © 2025 Texas Instruments Incorporated

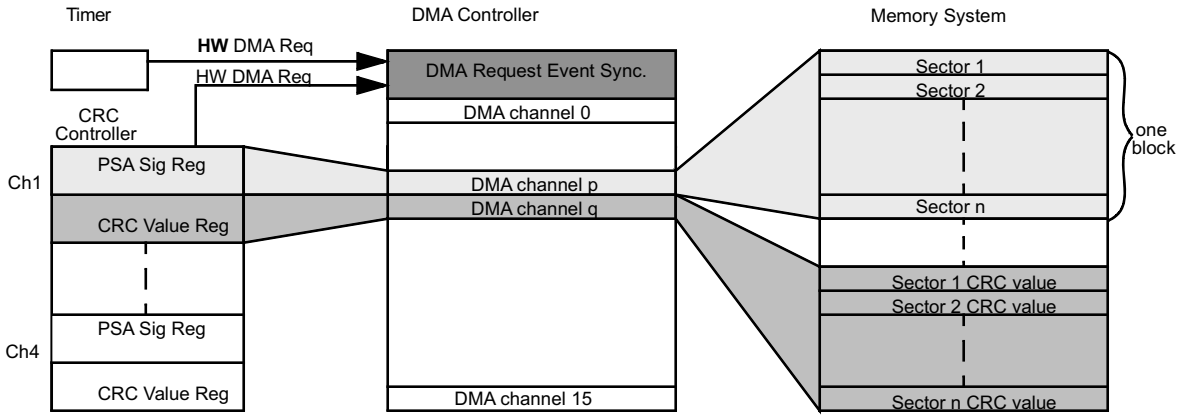

Figure 11-763. AUTO Mode Using Hardware Timer Trigger

11.8.8.6.4.7.2 AUTO Mode Using Software Trigger

The data patterns transfer can also be initiated by software. CPU can generate a software DMA request to activate the DMA channel to transfer data patterns from source memory system to the PSA Signature Register. To generate a software DMA request CPU needs to set the corresponding DMA channel in the DMA software trigger register. Note that just one software DMA request from CPU is enough to complete the entire data patterns transfer for all sectors. See Figure 11-764 for an illustration.

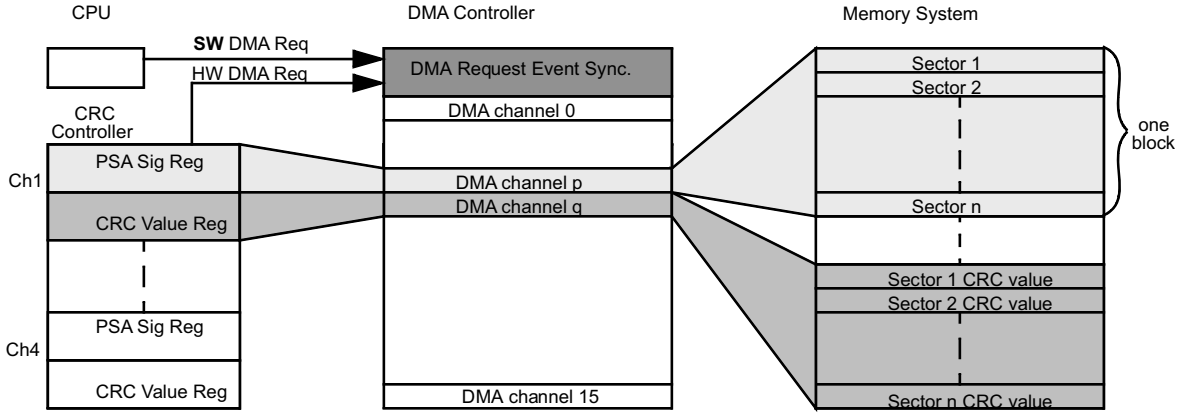

Figure 11-764. AUTO Mode With Software CPU Trigger

Copyright © 2025 Texas Instruments Incorporated

11.8.8.6.4.7.3 Semi-CPU Mode Using Hardware Timer Trigger

During semi-CPU mode, no DMA request is generated by CRC controller. Therefore, no DMA channel is allocated to update CRC Value Register. CPU should not read from CRC Value Register in semi-CPU mode as it contains stale value. Note that no signature verification is performed at all during this mode. Similar to AUTO mode, either by hardware or by software DMA request can be used as a trigger for data patterns transfer. Figure 11-765 illustrates the DMA setup using semi-CPU mode with hardware timer trigger.

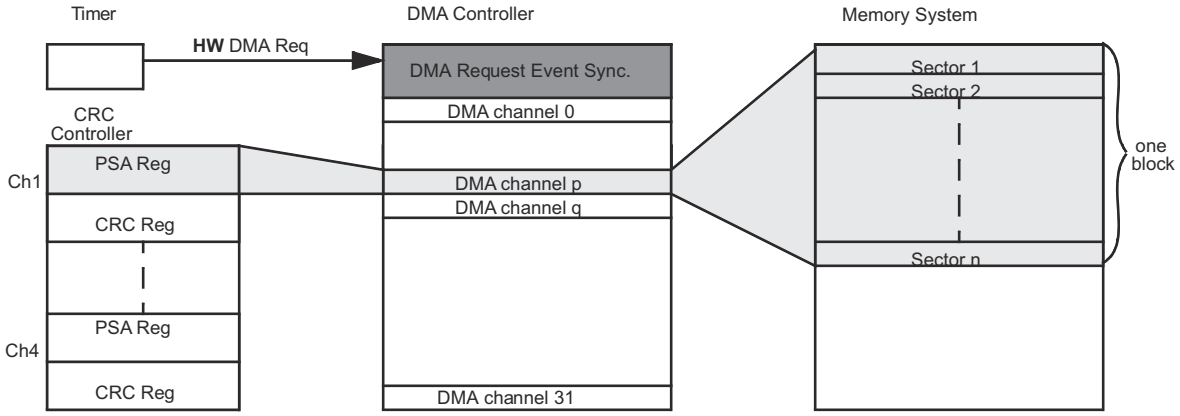

Figure 11-765. Semi-CPU Mode With Hardware Timer Trigger

Table 11-1995. CRC Modes in Which DMA Request and Counter Logic are Active or Inactive

Mode	DMA Request	Pattern Counter	Sector Counter	Timeout Counter
AUTO	Active	Active	Active	Active
Semi-CPU	Inactive	Active	Active	Active
Full-CPU	Inactive	Inactive	Inactive	Inactive

11.8.8.6.4.8 Pattern Count Register

There is a 20-bit data pattern counter for every CRC channel. The data pattern counter is a down counter and can be pre-loaded with a programmable value stored in the Pattern Count Register. When the data pattern counter reaches zero, a compression complete interrupt is generated in Semi-CPU mode and an automatic signature verification is performed in AUTO mode. In AUTO only, DMA request is generated to trigger the DMA controller to update the CRC Value Register.

Note

The data pattern count should be divisible by the total transfer count as programmed in DMA controller. The total transfer count is the product of element count and frame count.

11.8.8.6.4.9 Sector Count Register/Current Sector Register

Each channel contains a 16 bit sector counter. The sector count register stores the number of sectors. Sector counter is a free running counter and is incremented by one each time when one sector of data patterns is compressed. When the signature verification fails, the current value stored in the sector counter is saved into current sector register. If signature verification fails, CPU can read from the current sector register to identify the sector which causes the CRC mismatch. To aid and facilitate the CPU in determining the cause of a CRC failure, it is advisable to use the following equation during CRC and DMA setup:

CRC Pattern Count × CRC Sector Count = DMA Element Count × DMA Frame Count

Copyright © 2025 Texas Instruments Incorporated

The current sector register is frozen from being updated until both the current sector register is read and CRC fail status bit is cleared by CPU. If CPU does not respond to the CRC failure in a timely manner before another sector produces a signature verification failure, the current sector register is not updated with the new sector number. An overrun interrupt is generate instead. If current sector register is already frozen with an erroneous sector and emulation is entered with SUSPEND signal goes to high then the register still remains frozen even it is read.

In Semi-CPU mode, the current sector register is used to indicate the sector for which the compression complete has last happened.

The current sector register is reset when the PSA software reset is enabled.

Note

Both data pattern count and sector count registers must be greater than or equal to one for the counters to count. After reset, pattern count and sector count registers default to zero and the associated counters are inactive.

11.8.8.6.4.10 Interrupt

The CRC controller generates several types of interrupts per channel. Associated with each interrupt, there is an interrupt enable bit. No interrupt is generated in Full-CPU mode.

- Compression complete interrupt
- CRC fail interrupt
- Overrun interrupt
- Underrun interrupt
- Timeout interrupt

Table 11-1996. Modes in Which Interrupt Condition Can Occur

	AUTO	Semi-CPU	Full-CPU
Compression Complete	no	yes	no
CRC Fail	yes	no	no
Overrun	yes	yes	no
Underrun	yes	no	no
Timeout	yes	yes	no

11.8.8.6.4.10.1 Compression Complete Interrupt

Compression complete interrupt is generated in Semi-CPU mode only. When the data pattern counter reaches zero, the compression complete flag is set and the interrupt is generated.

11.8.8.6.4.10.2 CRC Fail Interrupt

CRC fail interrupt is generated in AUTO mode only. When the signature verification fails, the CRC fail flag is set,. CPU should take action to address the fail condition and clear the CRC fail flag after it resolves the CRC mismatch.

11.8.8.6.4.10.3 Overrun Interrupt

Overrun interrupt is generated in either AUTO or Semi-CPU mode. During AUTO mode, if a CRC fail is detected then the current sector number is recorded in the current sector register. If CRC fail status bit is not cleared and current sector register is not read by the host CPU before another CRC fail is detected for another sector then an overrun interrupt is generated. During Semi-CPU mode, when the data pattern counter finishes counting, it generates a compression complete interrupt. At the same time the signature is copied into the PSA Sector Signature Register. If the host CPU does not read the signature from PSA Sector Signature Register before it is updated again with a new signature value then an overrun interrupt is generated.

Copyright © 2025 Texas Instruments Incorporated

11.8.8.6.4.10.4 Underrun Interrupt

Underrun interrupt only occurs in AUTO mode. The interrupt is generated when the CRC Value Register is not updated with the corresponding signature when the data pattern counter finishes counting. During AUTO mode, CRC Controller generates DMA request to update CRC Value Register in synchronization to the corresponding sector of the memory. Signature verification is also performed if underrun condition is detected. And CRC fail interrupt is generated at the same time as the underrun interrupt.

11.8.8.6.4.10.5 Timeout Interrupt

To ensure that the memory system is examined within a pre-defined time frame and no loss of incoming data there is a 24 bit timeout counter per CRC channel. The 24 bit timeout down counter can be pre-loaded with two different pre-load values, watchdog timeout pre-load value (CRC_WDTOPLDx) and block complete timeout pre-load value (CRC_BCTOPLDx). The timeout counter is clocked by a prescaler clock which is permanently running at division 64 of HCLK clock.

First pattern of data must be transferred by the DMA before the timeout counter expires, Watchdog timeout pre-load register (CRC_WDTOPLDx) is used as timeout counter. Block complete timeout pre-load register (CRC_BCTOPLDx) is used to check if one complete block of data patterns are compressed within a specific time frame. The timeout counter is first pre-loaded with CRC_WDTOPLDx after either AUTO or Semi-CPU mode is selected and starts to down count. If the timeout counter expires before DMA transfers any data pattern to PSA Signature Register then a timeout interrupt is generated. An incoming data pattern before the timeout counter expires will automatically pre-load the timeout counter with CRC_BCTOPLDx the block complete timeout pre-load value.

Block complete timeout pre-load value is used to check it one block of data patterns are compressed within a given time limit. If the timeout counter pre-loaded with CRC_BCTOPLDx value expires before one block of data patterns are compressed a timeout interrupt is generated. When one block (pattern count x sector count) of data patterns are compressed before the counter has expired, the counter is pre-loaded with CRC_WDTOPLDx value again. If the timeout counter is pre-loaded with zero then the counter is disable and no timeout interrupt is generated.

In Figure 11-766, a timer generates DMA request every 10ms to trigger one block (pattern count x sector count) transfer. Since we want to make sure that DMA does start to transfer a block every 10 ms we would set the first pre-load value to 10ms in CRC_WDTOPLDx. We also want to make sure that one block of data patterns are compressed within 4ms. With such a requirement, we would set the second pre-load value to 4ms in CRC_BCTOPLDx register.

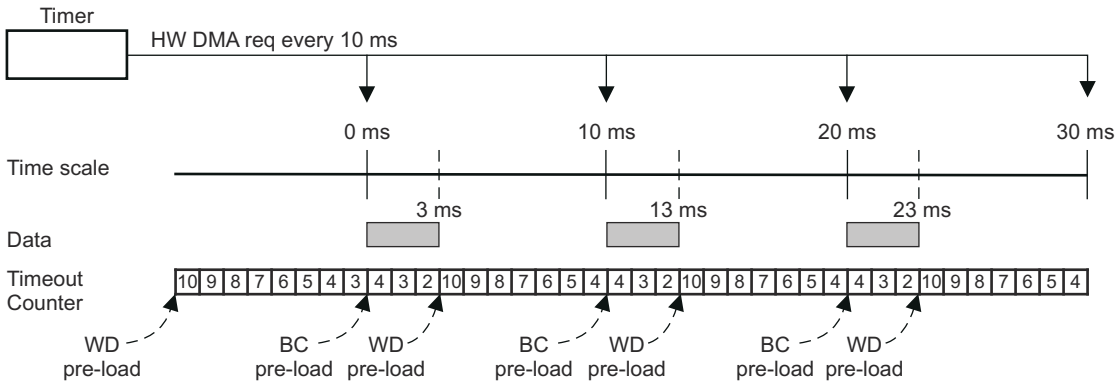

WD pre-load = watchdog timeout pre-load (CRC_WDTOPLDx)
BC pre-load = block complete timeout pre-load (CRC_BCTOPLDx)

Note: No timeout interrupt is generated in this example since each block of data patterns are compressed in 3 ms and DMA does initiate a block transfer every 10 ms.

Figure 11-766. Timeout Example 1

Copyright © 2025 Texas Instruments Incorporated

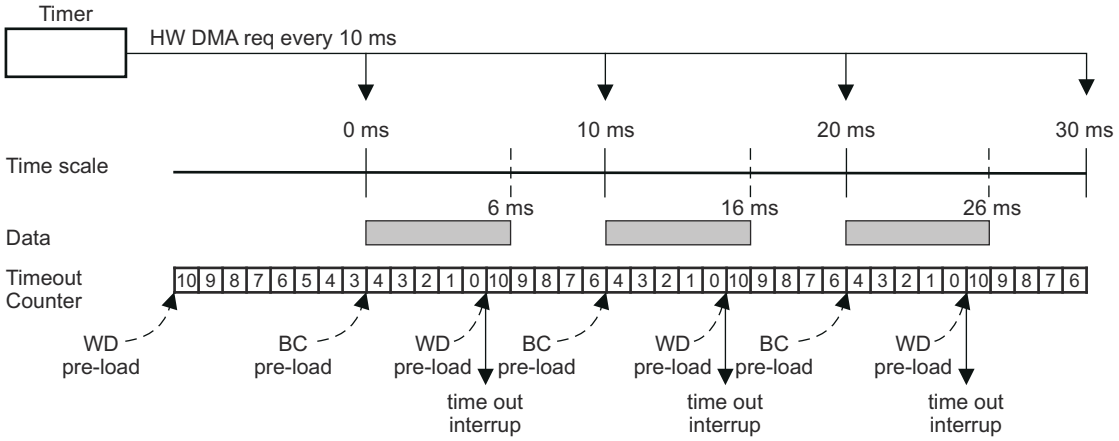

WD pre-load = watchdog timeout pre-load (CRC_WDTOPLDx)
BC pre-load = block complete timeout pre-load (CRC_BCTOPLDx)

Note: Timeout interrupt is generated in this example since each block of data patterns are compressed in 6 ms and this is out of the 4ms time frame.

Figure 11-767. Timeout Example 2

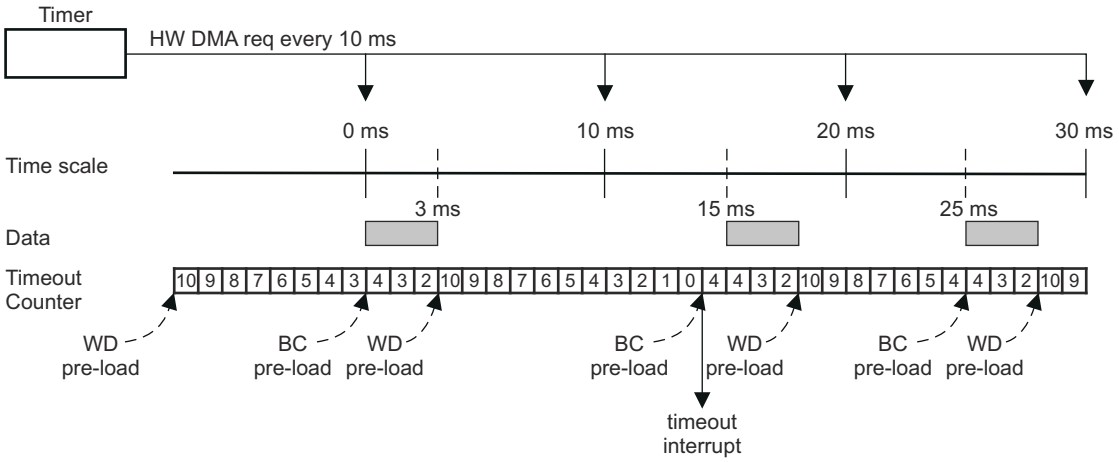

WD pre-load = watchdog timeout pre-load (CRC_WDTOPLDx)
BC pre-load = block complete timeout pre-load (CRC_BCTOPLDx)

Note: Timeout interrupt is generated in this example since DMA can not transfer the second block of data within 10ms time limit and the reason may be that DMA is set up in fixed priority scheme and DMA is serving other higher priority channels at the time before it can service the timer request.

Figure 11-768. Timeout Example 3

Copyright © 2025 Texas Instruments Incorporated

11.8.8.6.4.10.6 Interrupt Offset Register

CRC Controller only generates one interrupt request to interrupt manager. A interrupt offset register is provided to indicate the source of the pending interrupt with highest priority. Table 11-1997 shows the offset interrupt vector address of each interrupt condition in an ascending order of priority.

Table 11-1997. Interrupt Offset Mapping

Offset Value	Interrupt Condition
0	Phantom
1h	Ch1 CRC Fail
2h	Ch2 CRC Fail
3h-8h	Reserved
9h	Ch1 Compression Complete
Ah	Ch2 Compression Complete
Bh-10h	Reserved
11h	Ch1 Overrun
12h	Ch2 Overrun
13h-18h	Reserved
19h	Ch1 Underrun
1Ah	Ch2 Underrun
1Bh-20h	Reserved
21h	Ch1 Timeout
22h	Ch2 Timeout
23h-24h	Reserved

11.8.8.6.4.10.7 Error Handling

When an interrupt is generated, host CPU should take appropriate actions to identify the source of error and restart the respective channel in DMA and CRC module. To restart a CRC channel, the user should perform the following steps in the ISR:

1. Write to software reset bit in CRC_CTRL register to reset the respective PSA Signature Register.
2. Reset the CHx_MODE bits to 00 in CRC_CTRL register as Data capture mode.
3. Set the CHx_MODE bits in CRC_CTRL register to desired new mode again.
4. Release software reset.

The host CPU should use byte write to restart each individual channel.

11.8.8.6.4.11 Power Down Mode

CRC module can be put into power down mode when the power down control bit PWDN is set. The module wakes up when the PWDN bit is cleared.

11.8.8.6.4.12 Emulation

A read access from a register in functional mode can sometimes trigger a certain internal event to follow. For example, reading an interrupt offset register triggers an event to clear the corresponding interrupt status flag. During emulation when SUSPEND signal is high, a read access from any register should only return the register contents to the bus and should not trigger or mask any event as it would have in functional mode. This is to prevent debugger from reading the interrupt offset register during refreshing screen and cause the corresponding interrupt status flag to get cleared. Timeout counters are stopped to generate timeout interrupts in emulation mode. No Peripheral Controller bus error should be generated if reading from the unimplemented locations.

Copyright © 2025 Texas Instruments Incorporated

11.8.8.6.4.13 Peripheral Bus Interface

CRC is a Peripheral target module. The register interface is similar to other peripheral modules. CRC supports following features:

- Different sizes of burst operation.
- Aligned and unaligned accesses.
- Abort is generated for any illegal address accesses.

11.8.8.6.5 Example

This section illustrates several of the ways in which the CRC Controller can be utilized to perform CRC.

11.8.8.6.5.1 Example: Auto Mode Using Time Based Event Triggering

A large memory area with 2Mbyte (256k doubleword) is to be checked in the background of CPU. CRC is to be performed every 1K byte (128 doubleword). Therefore there should be 2048 pre-recorded CRC values. For illustration purpose, we map channel 1 CRC Value Register to DMA channel 1 and channel 1 PSA Signature Register to DMA channel 2. Assume all DMA transfers are carried out in 64-bit transfer size.

11.8.8.6.5.1.1 DMA Setup

- Set up DMA channel 1 with the starting address from which the pre-determined CRC values are stored. Set up the destination address to the memory mapped channel 1 CRC Value Register. Put the source address at post increment addressing mode and put the destination address at constant addressing mode. Use ***hardware*** DMA request for channel 1 to trigger a ***frame*** transfer.
- Set up DMA channel 2 with the source address from which the contents of memory to be verified. Set up the destination address to the memory mapped channel 1 PSA Signature Register. Program the element transfer count to 128 and the frame transfer count to 2048. Put the source address at post increment addressing mode and put the destination address at constant address mode. Use ***hardware*** DMA request for channel 2 to trigger an entire ***block*** transfer.

11.8.8.6.5.1.2 Timer Setup

The timer can be any general purpose timer which is capable of generating a time-based DMA request.

- Set up timer to generate DMA request associated with DMA channel 2. For example, an OS can set up the timer to generate a DMA request every 10ms.

Copyright © 2025 Texas Instruments Incorporated

11.8.8.6.5.1.3 CRC Setup

- Program the pattern count to 128.
- Program the sector count to 2048.
- Enable AUTO mode and all interrupts.

After AUTO mode is selected, CRC Controller automatically generates a DMA request on channel 1. Around the same time the timer module also generates a DMA request on DMA channel 2. When the first incoming data pattern arrives at the PSA Signature Register, the CRC Controller will compress it. After some time, the DMA controller would update the CRC Value Register with a pre-determined value matching the calculated signature for the first sector of 128 64 bit data patterns. After one sector of data patterns are compressed, the CRC Controller generate a CRC fail interrupt if signature stored at the PSA Sector Signature Register does not match the CRC Value Register. CRC Controller generates a DMA request on DMA channel 1 when one sector of data patterns are compressed. This routine will continue until the entire 2Mbyte are consumed. If the timeout counter reached zero before the entire 2Mbytes are compressed a timeout interrupt is generated. After 2MBytes are transferred, the DMA can generate an interrupt to CPU. The entire operation will continue again when DMA responds to the DMA request from both the timer and CRC Controller. The CRC is performed totally without any CPU intervention.

11.8.8.6.5.2 Example: Auto Mode Without Using Time Based Triggering

A small but highly secured memory area with 1kbytes is to be checked in the background of CPU. CRC is to be performed every 1Kbytes. Therefore there is only one pre-recorded CRC value. For illustration purpose, we map channel 1 CRC Value Register to DMA channel 1 and channel 1 PSA Signature Register to DMA channel 2. Assume all transfers carried out by DMA are in 64 bit transfer size.

11.8.8.6.5.2.1 DMA Setup

- Set up DMA channel 1 with the source address from which the pre-determined CRC value is stored. Set up the destination address to the memory mapped channel 1 CRC Value Register. Put the source address at constant addressing mode and put the destination address at constant addressing mode. Use ***hardware*** DMA request for channel 1.
- Set up DMA channel 2 with the source address from which the memory area to be verified. Set up the destination address to the memory mapped channel 1 PSA Signature Register. Program the element transfer count to 128 and the frame transfer count to 1. Put the source address at post increment addressing mode and put the destination address at constant address mode. Generate a ***software*** DMA request on channel 2 after CRC has completed its setup. Enable autoinitiation for DMA channel 2.

11.8.8.6.5.2.2 CRC Setup

- Program the pattern count to 128.
- Program the sector count to 1.
- Leaving the timeout count register with the reset value of zero means no timeout interrupt is generated.
- Enable AUTO mode and all interrupts.

After AUTO mode is selected, the CRC Controller automatically generates a DMA request on channel 1. At the same time the CPU generates a ***software*** DMA request on DMA channel 2. When the first incoming data pattern arrives at the PSA Signature Register, the CRC Controller will compress it. After some time, the DMA controller would update the CRC Value Register with a pre-determined value matching the calculated signature for the first sector of 128 64 bit data patterns. After one sector of data patterns are compressed, the CRC Controller generates a CRC fail interrupt if signature stored at the PSA Sector Signature Register does not match the CRC Value Register. CRC Controller generates a DMA request on DMA channel 1 again after one sector is compressed. After 1kbytes are transferred, the DMA can generate an interrupt to CPU. Responding to the DMA interrupt CPU can restart the CRC routine by generating a software DMA request onto channel 2 again.

11.8.8.6.5.3 Example: Semi-CPU Mode

If DMA controller is available in a system, the CRC module can also operate in semi-CPU mode. This means that CPU can still make use of the DMA to perform data patterns transfer to CRC controller in the background. The difference between semi-CPU mode and AUTO mode is that CRC controller does not automatically perform

Copyright © 2025 Texas Instruments Incorporated

the signature verification. CRC controllers generates a compression complete interrupt to CPU when the one sector of data patterns are compressed. CPU needs to perform the signature verification itself.

A memory area with 2Mbyte is to be verified with the help of the CPU. CRC operation is to be performed every 1K byte. Since there are 2Mbyte (256k doublewords) of memory to be check and we want to perform a CRC every 1Kbyte (128 doublewords) and therefore there should be 2048 pre-recorded CRC values. In Semi-CPU mode, the CRC Value Register is not updated and contains indeterminate data.

11.8.8.6.5.3.1 DMA Setup

Set up DMA channel 1 with the source address from which the memory area to be verified are mapped. Set up the destination address to the memory mapped channel 1 PSA Signature Register. Put the starting address at post increment addressing mode and put the destination address at constant address mode. Use hardware DMA request to trigger an entire block transfer for channel 1. Disable autoinitiation for DMA channel 1.

11.8.8.6.5.3.2 Timer Setup

The timer can be any general purpose timer which is capable of generating a time based DMA request.

Set up timer to generate DMA request associated with DMA channel 1. For example, an OS can set up the timer to generate a DMA request every 10ms.

11.8.8.6.5.3.3 CRC Setup

- Program the pattern count to 128.
- Program the sector count to 2048.
- Enable Semi-CPU mode and enable all interrupts.

The timer module first generates a DMA request on DMA channel 1 when it is enabled. When the first incoming data pattern arrives at the PSA Signature Register, the CRC controller will compress it. After one sector of data patterns are compressed, the CRC controller generate a compression complete interrupt. Upon responding to the interrupt the CPU would read from the PSA Sector Signature Register. It is up to the CPU on how to deal with the PSA value just read. It can compare it to a known signature value or it can write it to another memory location to build a signature file or even transfer the signature out of the device via SCI or SPI. This routine will continue until the entire 2Mbyte are consumed. The latency of the interrupt response from CPU can cause overrun condition. If CPU does not read from PSA Sector Signature Register before the PSA value is overridden with the signature of the next sector of memory, an overrun interrupt will be generated by CRC controller.

11.8.8.6.5.4 Example: Full-CPU Mode

In a system without the availability of DMA controller, the CRC routine can be operated by CPU provided the CPU has enough throughput. CPU needs to read from the memory area from which CRC is to be performed.

A memory area with 2Mbyte is to be checked with the help of the CPU. CRC verification is to be performed every 1K byte. In CPU mode, the CRC Value Register is not updated and contains indeterminate data.

11.8.8.6.5.4.1 CRC Setup

- All control registers can be left in their reset state. Only enable Full-CPU mode.

CPU itself reads from the memory and write the data to the PSA Signature Register inside CRC Controller. When the first incoming data pattern arrives at the PSA Signature Register, the CRC Controller will compress it. After ***2MBytes*** data patterns are compressed, CPU can read from the PSA Signature Register. It is up to the CPU on how to deal with the PSA signature value just read. It can compare it to a known signature value stored at another memory location.

Copyright © 2025 Texas Instruments Incorporated

11.8.8.6.6 MSS_MCRC Registers

Table 11-1998 lists the PCR_generated_memory_map registers. All register offset addresses not listed in Table 11-1998 should be considered as reserved locations and the register contents should not be modified.

Table 11-1998. MSS_MCRC Registers

Offset	Acronym	Register Name	Section
0h	CRC_CTRL0	CRC Global Control Register 0	Section 12.8.8.6.6.1
8h	CRC_CTRL1	CRC Global Control Register 1	Section 12.8.8.6.6.2
10h	CRC_CTRL2	CRC Global Control Register 2	Section 12.8.8.6.6.3
18h	CRC_INTS	CRC Interrupt Enable Set Register	Section 12.8.8.6.6.4
20h	CRC_INTR	CRC Interrupt Enable Reset Register	Section 12.8.8.6.6.5
28h	CRC_STATUS_REG	CRC Interrupt Status Register-	Section 12.8.8.6.6.6
30h	CRC_INT_OFFSET_REG	CRC Interrupt Offset	Section 12.8.8.6.6.7
38h	CRC_BUSY	CRC Busy Register during AUTO mode	Section 12.8.8.6.6.8
40h	CRC_PCOUNT_REG1	CRC Pattern Counter Pre-load Register1	Section 12.8.8.6.6.9
44h	CRC_SCOUNT_REG1	CRC Sector Counter Pre-load Register1	Section 12.8.8.6.6.10
48h	CRC_CURSEC_REG1	CRC Current Sector Regis-ter 1	Section 12.8.8.6.6.11
4Ch	CRC_WDTOPLD1	CRC channel 1 Watchdog Timeout Preload Register A	Section 12.8.8.6.6.12
50h	CRC_BCTOPLD1	CRC channel 1 Block Complete Timeout Preload Register B	Section 12.8.8.6.6.13
60h	PSA_SIGREGL1	Channel 1 PSA signature low register	Section 12.8.8.6.6.14
64h	PSA_SIGREGH1	Channel 1 PSA signature high register	Section 12.8.8.6.6.15
68h	CRC_REGL1	Channel 1 CRC value low register	Section 12.8.8.6.6.16
6Ch	CRC_REGH1	Channel 1 CRC value high register	Section 12.8.8.6.6.17
70h	PSA_SECSIGREGL1	Channel 1 PSA sector sig-nature low register	Section 12.8.8.6.6.18
74h	PSA_SECSIGREGH1	Channel 1 PSA sector sig-nature high register	Section 12.8.8.6.6.19
78h	RAW_DATAREGL1	Channel 1 Raw Data Low Register	Section 12.8.8.6.6.20
7Ch	RAW_DATAREGH1	Channel 1 Raw Data High Register	Section 12.8.8.6.6.21
80h	CRC_PCOUNT_REG2	CRC Pattern Counter Pre-load Register2	Section 12.8.8.6.6.22
84h	CRC_SCOUNT_REG2	CRC Sector Counter Pre-load Register2	Section 12.8.8.6.6.23
88h	CRC_CURSEC_REG2	CRC Current Sector Regis-ter 2	Section 12.8.8.6.6.24
8Ch	CRC_WDTOPLD2	CRC channel 2 Watchdog Timeout Preload Register	Section 12.8.8.6.6.25
90h	CRC_BCTOPLD2	CRC channel 2 Block Com-plete Timeout Preload Register	Section 12.8.8.6.6.26
A0h	PSA_SIGREGL2	Channel 2 PSA signature low register	Section 12.8.8.6.6.27
A4h	PSA_SIGREGH2	Channel 2 PSA signature high register	Section 12.8.8.6.6.28

Copyright © 2025 Texas Instruments Incorporated

Table 11-1998. MSS_MCRC Registers (continued)

Offset	Acronym	Register Name	Section
A8h	CRC_REGL2	Channel 2 CRC value low register	Section 12.8.8.6.6.29
ACh	CRC_REGH2	Channel 2 CRC value high register	Section 12.8.8.6.6.30
B0h	PSA_SECSIGREGL2	Channel 2 PSA sector sig-nature low register	Section 12.8.8.6.6.31
B4h	PSA_SECSIGREGH2	Channel 2 PSA sector sig-nature high register	Section 12.8.8.6.6.32
B8h	RAW_DATAREGL2	Channel 2 Raw Data Low Register	Section 12.8.8.6.6.33
BCh	RAW_DATAREGH2	Channel 2 Raw Data High register	Section 12.8.8.6.6.34
C0h	CRC_PCOUNT_REG3	CRC Pattern Counter Pre-load Register3	Section 12.8.8.6.6.35
C4h	CRC_SCOUNT_REG3	CRC Sector Counter Pre-load Register3	Section 12.8.8.6.6.36
C8h	CRC_CURSEC_REG3	CRC Current Sector Regis-ter 3	Section 12.8.8.6.6.37
CCh	CRC_WDTOPLD3	CRC channel 3 Watchdog Timeout Preload Register	Section 12.8.8.6.6.38
D0h	CRC_BCTOPLD3	CRC channel 3 Block Com-plete Timeout Preload Reg-ister	Section 12.8.8.6.6.39
E0h	PSA_SIGREGL3	Channel 3 PSA signature low register	Section 12.8.8.6.6.40
E4h	PSA_SIGREGH3	Channel 3 PSA signature high register	Section 12.8.8.6.6.41
E8h	CRC_REGL3	Channel 3 CRC value low register	Section 12.8.8.6.6.42
ECh	CRC_REGH3	Channel 3 CRC value high register	Section 12.8.8.6.6.43
F0h	PSA_SECSIGREGL3	Channel 3 PSA sector sig-nature low register	Section 12.8.8.6.6.44
F4h	PSA_SECSIGREGH3	Channel 3 PSA sector sig-nature high register	Section 12.8.8.6.6.45
F8h	RAW_DATAREGL3	Channel 3 Raw Data Low Register	Section 12.8.8.6.6.46
FCh	RAW_DATAREGH3	Channel 3 Raw Data High register	Section 12.8.8.6.6.47
100h	CRC_PCOUNT_REG4	CRC Pattern Counter Pre-load Register4	Section 12.8.8.6.6.48
104h	CRC_SCOUNT_REG4	CRC Sector Counter Pre-load Register4	Section 12.8.8.6.6.49
108h	CRC_CURSEC_REG4	CRC Current Sector Regis-ter 4	Section 12.8.8.6.6.50
10Ch	CRC_WDTOPLD4	CRC channel 4 Watchdog Timeout Preload Register	Section 12.8.8.6.6.51
110h	CRC_BCTOPLD4	CRC channel 4 Block Com-plete Timeout Preload Reg-ister	Section 12.8.8.6.6.52
120h	PSA_SIGREGL4	Channel 4 PSA signature low register	Section 12.8.8.6.6.53
124h	PSA_SIGREGH4	Channel 4 PSA signature high register	Section 12.8.8.6.6.54

Copyright © 2025 Texas Instruments Incorporated

Table 11-1998. MSS_MCRC Registers (continued)

Offset	Acronym	Register Name	Section
128h	CRC_REGL4	Channel 4 CRC value low register	Section 12.8.8.6.6.55
12Ch	CRC_REGH4	Channel 4 CRC value high register	Section 12.8.8.6.6.56
130h	PSA_SECSIGREGL4	Channel 4 PSA sector sig-nature low register	Section 12.8.8.6.6.57
134h	PSA_SECSIGREGH4	Channel 4 PSA sector sig-nature high register	Section 12.8.8.6.6.58
138h	RAW_DATAREGL4	Channel 4 Raw Data Low Register	Section 12.8.8.6.6.59
13Ch	RAW_DATAREGH4	Channel 4 Raw Data High register	Section 12.8.8.6.6.60
140h	MCRC_BUS_SEL	Data bus tracing selection	Section 12.8.8.6.6.61
144h	MCRC_RESERVED	RESERVED	Section 12.8.8.6.6.62

Copyright © 2025 Texas Instruments Incorporated

11.8.8.6.6.1 CRC_CTRL0 Register (Offset = 0h) [reset = 0h]

CRC_CTRL0 is shown in Figure 11-769 and described in Table 11-1999.

Return to the Table 11-1998.

Contains sw reset control bit to reset PSA

Figure 11-769. CRC_CTRL0 Register

31	30	29	28	27	26	25	24
NU12	NU11	NU10	NU9		NU8		NU7
R-0h	R-0h	R-0h	R-0h		R-0h		R-0h
23	22	21	20	19	18	17	16
NU6	NU5	NU4	NU3		NU2		NU1
R-0h	R-0h	R-0h	R-0h		R-0h		R-0h
15	14	13	12	11	10	9	8
CH2_CRC_SEL2	CH2_BYTE_SWAP	CH2_BIT_SWAP	CH2_CRC_SEL		CH2_DW_SEL		CH2_PSA_SWREST
R/W-0h	R/W-0h	R/W-0h	R/W-0h		R/W-0h		R/W-0h
7	6	5	4	3	2	1	0
CH1_CRC_SEL2	CH1_BYTE_SWAP	CH1_BIT_SWAP	CH1_CRC_SEL		CH1_DW_SEL		CH1_PSA_SWREST
R/W-0h	R/W-0h	R/W-0h	R/W-0h		R/W-0h		R/W-0h

Table 11-1999. CRC_CTRL0 Register Field Descriptions

Bit	Field	Type	Reset	Description
31	NU12	R	0h	Reserved
30	NU11	R	0h	Reserved
29	NU10	R	0h	Reserved
28-27	NU9	R	0h	Reserved
26-25	NU8	R	0h	Reserved
24	NU7	R	0h	Reserved
23	NU6	R	0h	Reserved
22	NU5	R	0h	Reserved
21	NU4	R	0h	Reserved
20-19	NU3	R	0h	Reserved
18-17	NU2	R	0h	Reserved
16	NU1	R	0h	Reserved
15	CH2_CRC_SEL2	R/W	0h	Refer "CH2_DW_SEL" field description
14	CH2_BYTE_SWAP	R/W	0h	BYTE SWAP Enable across Data Size 0 – Byte Swap Disabled 1 – Byte Swap enabled.
13	CH2_BIT_SWAP	R/W	0h	msb/lsb SWAPPING 0 – msb (most significant bit First) 1 – lsb (least significant bit First)
12-11	CH2_CRC_SEL	R/W	0h	CRC type select. {CH1_CRC_SEL2,CH1_CRC_SEL[1:0]} 000 – CRC-64 001 - CRC-16 010 – CRC-32 100 - VDA CAN, CRC-8, Autosar 4.0 110 - CASTAGNOLI, iSCSI 111 / 011 - E2E Profile 4
10-9	CH2_DW_SEL	R/W	0h	CRC Data Size select. 000 – 64 bit Data Size 001 - 16 bit Data Size 010 – 32 Bit Data Size

Copyright © 2025 Texas Instruments Incorporated

Table 11-1999. CRC_CTRL0 Register Field Descriptions (continued)

Bit	Field	Type	Reset	Description
8	CH2_PSA_SWREST	R/W	0h	Channel 2 PSA Software Reset. When set, the PSA Signature Register is reset to all zero. Software reset does not reset software reset bit itself. Therefore, CPU is required to clear this bit by writing a '0'. 0 = PSA Signature Register not reset 1 = PSA Signature Register reset
7	CH1_CRC_SEL2	R/W	0h	Refer "CH1_DW_SEL" field description
6	CH1_BYTE_SWAP	R/W	0h	BYTE SWAP Enable across Data Size 0 – Byte Swap Disabled 1 – Byte Swap enabled.
5	CH1_BIT_SWAP	R/W	0h	msb/lsb SWAPPING 0 – msb (most significant bit First) 1 – lsb (least significant bit First)
4-3	CH1_CRC_SEL	R/W	0h	CRC type select. {CH1_CRC_SEL2,CH1_CRC_SEL[1:0]} 000 – CRC-64 001 - CRC-16 010 – CRC-32 100 - VDA CAN, SAE-J1850 CRC-8 101 - H2F, Autosar 4.0 110 - CASTAGNOLI, iSCSI 111 / 011 - E2E Profile 4
2-1	CH1_DW_SEL	R/W	0h	CRC Data Size select. 000 – 64 bit Data Size 001 - 16 bit Data Size 010 – 32 Bit Data Size
0	CH1_PSA_SWREST	R/W	0h	Channel 1 PSA Software Reset. When set, the PSA Signature Register is reset to all zero. Software reset does not reset software reset bit itself. Therefore, CPU is required to clear this bit by writing a '0'. 0 = PSA Signature Register not reset 1 = PSA Signature Register reset

Copyright © 2025 Texas Instruments Incorporated

11.8.8.6.6.2 CRC_CTRL1 Register (Offset = 8h) [reset = 0h]

CRC_CTRL1 is shown in Figure 11-770 and described in Table 11-2000.

Return to the Table 11-1998.

Contains power down control bit

Figure 11-770. CRC_CTRL1 Register

31	30	29	28	27	26	25	24
RESERVED							
R-0h							
23	22	21	20	19	18	17	16
RESERVED							
R-0h							
15	14	13	12	11	10	9	8
RESERVED							
R-0h							
7	6	5	4	3	2	1	0
RESERVED							PWDN
R-0h							R/W-0h

Table 11-2000. CRC_CTRL1 Register Field Descriptions

Bit	Field	Type	Reset	Description
31-1	RESERVED	R	0h	
0	PWDN	R/W	0h	Power Down. When set, MCRC moduleMCRC Module is put in power down mode. 0 = MCRC is not in power down mode 1 = MCRC is in power down mode

Copyright © 2025 Texas Instruments Incorporated

11.8.8.6.6.3 CRC_CTRL2 Register (Offset = 10h) [reset = 0h]

CRC_CTRL2 is shown in Figure 11-771 and described in Table 11-2001.

Return to the Table 11-1998.

Contains channel mode, data trace enable control bits

Figure 11-771. CRC_CTRL2 Register

31	30	29	28	27	26	25	24
RESERVED						NU14	
R-0h						R-0h	
23	22	21	20	19	18	17	16
RESERVED						NU13	
R-0h						R-0h	
15	14	13	12	11	10	9	8
RESERVED						CH2_MODE	
R-0h						R/W-0h	
7	6	5	4	3	2	1	0
RESERVED			CH1_TRACEEN	RESERVED		CH1_MODE	
R-0h			R/W-0h	R-0h		R/W-0h	

Table 11-2001. CRC_CTRL2 Register Field Descriptions

Bit	Field	Type	Reset	Description
31-26	RESERVED	R	0h	
25-24	NU14	R	0h	Reserved
23-18	RESERVED	R	0h	
17-16	NU13	R	0h	Reserved
15-10	RESERVED	R	0h	
9-8	CH2_MODE	R/W	0h	Channel 2 Mode: 0 0 = Data Capture mode. In this mode, the PSA Signature Register does not compress data when it is written. Any data written to PSA Signature Register is simply captured by PSA Signature Register without any compression. This mode can be used to plant seed value into the PSA register 0 1 = AUTO mode 1 0 = Semi-CPU mode 1 1 = Full-CPU mode
7-5	RESERVED	R	0h	
4	CH1_TRACEEN	R/W	0h	Channel 1 Data Trace Enable. When set, the channel is put into data trace mode. The channel snoops on the CPU VBUSM, ITCM, DTCM buses for any read transaction. Any read data on these buses is compressed by the PSA Signature Register. When suspend is on, the PSA Signature Register does not compress any read data on these buses. 0 = Data Trace disable 1 = Data Trace enable
3-2	RESERVED	R	0h	
1-0	CH1_MODE	R/W	0h	Channel 1 Mode: 0 0 = Data Capture mode. In this mode, the PSA Signature Register does not compress data when it is written. Any data written to PSA Signature Register is simply captured by PSA Signature Register without any compression. This mode can be used to plant seed value into the PSA register 0 1 = AUTO mode 1 0 = Semi-CPU mode 1 1 = Full-CPU mode

Copyright © 2025 Texas Instruments Incorporated

11.8.8.6.6.4 CRC_INTS Register (Offset = 18h) [reset = 0h]

CRC_INTS is shown in Figure 11-772 and described in Table 11-2002.

Return to the Table 11-1998.

Write one to a bit to enable a interrupt

Figure 11-772. CRC_INTS Register

31	30	29	28	27	26	25	24
RESERVED			NU22	NU21	NU20	NU19	RESERVED
R-0h			R-0h	R-0h	R-0h	R-0h	R-0h
23	22	21	20	19	18	17	16
RESERVED			NU18	NU17	NU16	NU15	RESERVED
R-0h			R-0h	R-0h	R-0h	R-0h	R-0h
15	14	13	12	11	10	9	8
RESERVED			CH2_TIMEOUTENS	CH2_UNDERENS	CH2_OVERENS	CH2_CRCFAILENS	CH2_CCITENS
R-0h			R/W-0h	R/W-0h	R/W-0h	R/W-0h	R-0h
7	6	5	4	3	2	1	0
RESERVED			CH1_TIMEOUTENS	CH1_UNDERENS	CH1_OVERENS	CH1_CRCFAILENS	CH1_CCITENS
R-0h			R/W-0h	R/W-0h	R/W-0h	R/W-0h	R-0h

Table 11-2002. CRC_INTS Register Field Descriptions

Bit	Field	Type	Reset	Description
31-29	RESERVED	R	0h	
28	NU22	R	0h	Reserved
27	NU21	R	0h	Reserved
26	NU20	R	0h	Reserved
25	NU19	R	0h	Reserved
24-21	RESERVED	R	0h	
20	NU18	R	0h	Reserved
19	NU17	R	0h	Reserved
18	NU16	R	0h	Reserved
17	NU15	R	0h	Reserved
16-13	RESERVED	R	0h	
12	CH2_TIMEOUTENS	R/W	0h	Channel 2 Timeout Interrupt Enable Bit. Writing a one to this bit enable the timeout interrupt. Writing a zero has no effect. Reading from this bit gives the status (interrupt enable/disable). User and privileged mode read: 0 = Timeout Interrupt disable 1 = Timeout Interrupt enable User and privileged mode write: 0 = Has no effect 1 = Timeout Interrupt enable
11	CH2_UNDERENS	R/W	0h	Channel 2 Underrun Interrupt Enable Bit. Writing a one to this bit enable the underrun interrupt. Writing a zero has no effect. Reading from this bit gives the status (interrupt enable/disable). User and privileged mode read: 0 = Underrun Interrupt disable 1 = Underrun Interrupt enable User and privileged mode write: 0 = Has no effect 1 = Underrun Interrupt enable

Copyright © 2025 Texas Instruments Incorporated

Table 11-2002. CRC_INTS Register Field Descriptions (continued)

Bit	Field	Type	Reset	Description
10	CH2_OVERENS	R/W	0h	Channel 2 Overrun Interrupt Enable Bit. Writing a one to this bit enable the overrun interrupt. Writing a zero has no effect. Reading from this bit gives the status (interrupt enable/disable). User and privileged mode read: 0 = Overrun Interrupt disable 1 = Overrun Interrupt enable User and privileged mode write: 0 = Has no effect 1 = Overrun Interrupt enable
9	CH2_CRCFAILENS	R/W	0h	Channel 2 CRC Fail Interrupt Enable Bit. Writing a one to this bit enable the CRC fail interrupt. Writing a zero has no effect. Reading from this bit gives the status (interrupt enable/disable). User and privileged mode read: 0 = CRC Fail Interrupt disable 1 = CRC Fail Interrupt enable User and privileged mode write: 0 = Has no effect 1 = CRC Fail Interrupt enable
8	CH2_CRC_FAILENS	R/W	0h	Channel 2 CRC Fail Interrupt Enable Bit. Writing a one to this bit enable the CRC fail interrupt. Writing a zero has no effect. Reading from this bit gives the status (interrupt enable/disable). User and privileged mode read: 0 = CRC Fail Interrupt disable 1 = CRC Fail Interrupt enable User and privileged mode write: 0 = Has no effect 1 = CRC Fail Interrupt enable
7-5	RESERVED	R	0h	
4	CH1_TIMEOUTENS	R/W	0h	Channel 1 Timeout Interrupt Enable Bit. Writing a one to this bit enable the timeout interrupt. Writing a zero has no effect. Reading from this bit gives the status (interrupt enable/disable). User and privileged mode read: 0 = Timeout Interrupt disable 1 = Timeout Interrupt enable User and privileged mode write: 0 = Has no effect 1 = Timeout Interrupt enable
3	CH1_UNDERENS	R/W	0h	Channel 1 Underrun Interrupt Enable Bit. Writing a one to this bit enable the underrun interrupt. Writing a zero has no effect. Reading from this bit gives the status (interrupt enable/disable). User and privileged mode read: 0 = Underrun Interrupt disable 1 = Underrun Interrupt enable User and privileged mode write: 0 = Has no effect 1 = Underrun Interrupt enable
2	CH1_OVERENS	R/W	0h	Channel 1 Overrun Interrupt Enable Bit. Writing a one to this bit enable the overrun interrupt. Writing a zero has no effect. Reading from this bit gives the status (interrupt enable/disable). User and privileged mode read: 0 = Overrun Interrupt disable 1 = Overrun Interrupt enable User and privileged mode write: 0 = Has no effect 1 = Overrun Interrupt enable
1	CH1_CRCFAILENS	R/W	0h	Channel 1 CRC Fail Interrupt Enable Bit. Writing a one to this bit enable the CRC fail interrupt. Writing a zero has no effect. Reading from this bit gives the status (interrupt enable/disable). User and privileged mode read: 0 = CRC Fail Interrupt disable 1 = CRC Fail Interrupt enable User and privileged mode write: 0 = Has no effect 1 = CRC Fail Interrupt enable

Copyright © 2025 Texas Instruments Incorporated

Table 11-2002. CRC_INTS Register Field Descriptions (continued)

Bit	Field	Type	Reset	Description
0	CH1_CCITENS	R/W	0h	Channel 1 Compression Complete Interrupt Enable Bit. Writing a one to this bit enable the CRC fail interrupt. Writing a zero has no effect. Reading from this bit gives the status (interrupt enable/ disable). User and privileged mode read: 0 = Compression Complete Interrupt disable 1 = Compression Complete Interrupt enable User and privileged mode write: 0 = Has no effect 1 = Compression Complete Interrupt enable

Copyright © 2025 Texas Instruments Incorporated

11.8.8.6.6.5 CRC_INTR Register (Offset = 20h) [reset = 0h]

CRC_INTR is shown in Figure 11-773 and described in Table 11-2003.

Return to the Table 11-1998.

Write one to a bit to disable a interrupt

Figure 11-773. CRC_INTR Register

31	30	29	28	27	26	25	24
RESERVED			NU30	NU29	NU28	NU27	RESERVED
R-0h			R-0h	R-0h	R-0h	R-0h	R-0h
23	22	21	20	19	18	17	16
RESERVED			NU26	NU25	NU24	NU23	RESERVED
R-0h			R-0h	R-0h	R-0h	R-0h	R-0h
15	14	13	12	11	10	9	8
RESERVED			CH2_TIMEOUTENR	CH2_UNDERENR	CH2_OVERENR	CH2_CRCFAILENR	CH2_CCITENS
R-0h			R/W-0h	R/W-0h	R/W-0h	R/W-0h	R-0h
7	6	5	4	3	2	1	0
RESERVED			CH1_TIMEOUTENR	CH1_UNDERENR	CH1_OVERENR	CH1_CRCFAILENR	CH1_CCITENS
R-0h			R/W-0h	R/W-0h	R/W-0h	R/W-0h	R-0h

Table 11-2003. CRC_INTR Register Field Descriptions

Bit	Field	Type	Reset	Description
31-29	RESERVED	R	0h	
28	NU30	R	0h	Reserved
27	NU29	R	0h	Reserved
26	NU28	R	0h	Reserved
25	NU27	R	0h	Reserved
24-21	RESERVED	R	0h	
20	NU26	R	0h	Reserved
19	NU25	R	0h	Reserved
18	NU24	R	0h	Reserved
17	NU23	R	0h	Reserved
16-13	RESERVED	R	0h	
12	CH2_TIMEOUTENR	R/W	0h	Channel 2 Timeout Interrupt Disable Bit. Writing a one to this bit disable the timeout interrupt. Writing a zero has no effect. Reading from this bit gives the status (interrupt enable/disable). User and privileged mode read: 0 = Timeout Interrupt disable 1 = Timeout Interrupt enable User and privileged mode write: 0 = Has no effect 1 = Timeout Interrupt disable
11	CH2_UNDERENR	R/W	0h	Channel 2 Underrun Interrupt Disable Bit. Writing a one to this bit disable the underrun interrupt. Writing a zero has no effect. Reading from this bit gives the status (interrupt enable/dis- able). User and privileged mode read: 0 = Underrun Interrupt disable 1 = Underrun Interrupt enable User and privileged mode write: 0 = Has no effect 1 = Underrun Interrupt disable

Copyright © 2025 Texas Instruments Incorporated

Table 11-2003. CRC_INTR Register Field Descriptions (continued)

Bit	Field	Type	Reset	Description
10	CH2_OVERENR	R/W	0h	Channel 2 Overrun Interrupt Disable Bit. Writing a one to this bit disable the overrun interrupt. Writing a zero has no effect. Reading from this bit gives the status (interrupt enable/disable). User and privileged mode read: 0 = Overrun Interrupt disable 1 = Overrun Interrupt enable User and privileged mode write: 0 = Has no effect 1 = Overrun Interrupt disable
9	CH2_CRCFAILENR	R/W	0h	Channel 2 CRC Fail Interrupt Disable Bit. Writing a one to this bit disable the CRC fail interrupt. Writing a zero has no effect. Reading from this bit gives the status (interrupt enable/disable). User and privileged mode read: 0 = CRC Fail Interrupt disable 1 = CRC Fail Interrupt enable User and privileged mode write: 0 = Has no effect 1 = CRC Fail Interrupt disable
8	CH2_CCITENS	R/W	0h	Channel 2 Compression Complete Interrupt Enable Bit. Writing a one to this bit enable the CRC fail interrupt. Writing a zero has no effect. Reading from this bit gives the status (interrupt enable/ disable). User and privileged mode read: 0 = Compression Complete Interrupt disable 1 = Compression Complete Interrupt enable User and privileged mode write: 0 = Has no effect 1 = Compression Complete Interrupt enable
7-5	RESERVED	R	0h	
4	CH1_TIMEOUTENR	R/W	0h	Channel 1 Timeout Interrupt Disable Bit. Writing a one to this bit disable the timeout interrupt. Writing a zero has no effect. Reading from this bit gives the status (interrupt enable/disable). User and privileged mode read: 0 = Timeout Interrupt disable 1 = Timeout Interrupt enable User and privileged mode write: 0 = Has no effect 1 = Timeout Interrupt disable
3	CH1_UNDERENR	R/W	0h	Channel 1 Underrun Interrupt Disable Bit. Writing a one to this bit disable the underrun interrupt. Writing a zero has no effect. Reading from this bit gives the status (interrupt enable/dis- able). User and privileged mode read: 0 = Underrun Interrupt disable 1 = Underrun Interrupt enable User and privileged mode write: 0 = Has no effect 1 = Underrun Interrupt disable
2	CH1_OVERENR	R/W	0h	Channel 1 Overrun Interrupt Disable Bit. Writing a one to this bit disable the overrun interrupt. Writing a zero has no effect. Reading from this bit gives the status (interrupt enable/disable). User and privileged mode read: 0 = Overrun Interrupt disable 1 = Overrun Interrupt enable User and privileged mode write: 0 = Has no effect 1 = Overrun Interrupt disable
1	CH1_CRCFAILENR	R/W	0h	Channel 1 CRC Fail Interrupt Disable Bit. Writing a one to this bit disable the CRC fail interrupt. Writing a zero has no effect. Reading from this bit gives the status (interrupt enable/disable). User and privileged mode read: 0 = CRC Fail Interrupt disable 1 = CRC Fail Interrupt enable User and privileged mode write: 0 = Has no effect 1 = CRC Fail Interrupt disable

Copyright © 2025 Texas Instruments Incorporated

Table 11-2003. CRC_INTR Register Field Descriptions (continued)

Bit	Field	Type	Reset	Description
0	CH1_CCITENS	R	0h	Channel 1 Compression Complete Interrupt Enable Bit. Writing a one to this bit enable the CRC fail interrupt. Writing a zero has no effect. Reading from this bit gives the status (interrupt enable/ disable). User and privileged mode read: 0 = Compression Complete Interrupt disable 1 = Compression Complete Interrupt enable User and privileged mode write: 0 = Has no effect 1 = Compression Complete Interrupt enable

Copyright © 2025 Texas Instruments Incorporated

11.8.8.6.6.6 CRC_STATUS_REG Register (Offset = 28h) [reset = 0h]

CRC_STATUS_REG is shown in Figure 11-774 and described in Table 11-2004.

Return to the Table 11-1998.

Contains interrupt flags for different types of interrupt

Figure 11-774. CRC_STATUS_REG Register

31	30	29	28	27	26	25	24
RESERVED			NU38	NU37	NU36	NU35	RESERVED
R-0h			R-0h	R-0h	R-0h	R-0h	R-0h
23	22	21	20	19	18	17	16
RESERVED			NU34	NU33	NU32	NU31	RESERVED
R-0h			R-0h	R-0h	R-0h	R-0h	R-0h
15	14	13	12	11	10	9	8
RESERVED			CH2_TIMEOUT	CH2_UNDER	CH2_OVER	CH2_CRCFAIL	CH2_CCIT
R-0h			R/W-0h	R/W-0h	R/W-0h	R/W-0h	R-0h
7	6	5	4	3	2	1	0
RESERVED			CH1_TIMEOUT	CH1_UNDER	CH1_OVER	CH1_CRCFAIL	CH1_CCIT
R-0h			R/W-0h	R/W-0h	R/W-0h	R/W-0h	R-0h

Table 11-2004. CRC_STATUS_REG Register Field Descriptions

Bit	Field	Type	Reset	Description
31-29	RESERVED	R	0h	
28	NU38	R	0h	Reserved
27	NU37	R	0h	Reserved
26	NU36	R	0h	Reserved
25	NU35	R	0h	Reserved
24-21	RESERVED	R	0h	
20	NU34	R	0h	Reserved
19	NU33	R	0h	Reserved
18	NU32	R	0h	Reserved
17	NU31	R	0h	Reserved
16-13	RESERVED	R	0h	
12	CH2_TIMEOUT	R/W	0h	Channel 2 CRC Timeout Status Flag. This bit is cleared by writing a ’1’ to it only. Writing ’0’ has no effect. This bit is set in AUTO mode. 0 = No timeout interrupt is active 1 = Timeout interrupt is active
11	CH2_UNDER	R/W	0h	Channel 2 CRC Underrun Status Flag. This bit is cleared by writing a ’1’ to it only. Writing ’0’ has no effect. This bit is set in AUTO mode only 0 = No underrun interrupt is active 1 = Underrun interrupt is active
10	CH2_OVER	R/W	0h	Channel 2 CRC Overrun Status Flag. This bit is cleared by writing a ’1’ to it only. Writing ’0’ has no effect. This bit is set in AUTO mode 0 = No overrun interrupt is active 1 = Overrun interrupt is active

Copyright © 2025 Texas Instruments Incorporated

Table 11-2004. CRC_STATUS_REG Register Field Descriptions (continued)

Bit	Field	Type	Reset	Description
9	CH2_CRCFAIL	R/W	0h	Channel 2 CRC Compare Fail Status Flag. This bit is cleared by writing a '1' to it only. Writing '0' has no effect. This bit is set in AUTO mode only. 0 = No CRC compare fail interrupt is active 1 = CRC compare fail interrupt is active
8	CH2_CCIT	R/W	0h	Channel 2 CRC Pattern Compression Complete Status Flag. This bit is cleared by writing a 1 to it only. Writing 0 has no effect. This bit is only set in Semi-CPU mode. 0 = No CRC pattern compression complete interrupt is active 1 = CRC pattern compression complete interrupt is active
7-5	RESERVED	R	0h	
4	CH1_TIMEOUT	R/W	0h	Channel 1 CRC Timeout Status Flag. This bit is cleared by writing a '1' to it only. Writing '0' has no effect. This bit is set in AUTO mode. 0 = No timeout interrupt is active 1 = Timeout interrupt is active
3	CH1_UNDER	R/W	0h	Channel 1 CRC Underrun Status Flag. This bit is cleared by writing a '1' to it only. Writing '0' has no effect. This bit is set in AUTO mode only 0 = No underrun interrupt is active 1 = Underrun interrupt is active
2	CH1_OVER	R/W	0h	Channel 1 CRC Overrun Status Flag. This bit is cleared by writing a '1' to it only. Writing '0' has no effect. This bit is set in AUTO mode 0 = No overrun interrupt is active 1 = Overrun interrupt is active
1	CH1_CRCFAIL	R/W	0h	Channel 1 CRC Compare Fail Status Flag. This bit is cleared by writing a '1' to it only. Writing '0' has no effect. This bit is set in AUTO mode only. 0 = No CRC compare fail interrupt is active 1 = CRC compare fail interrupt is active
0	CH1_CCIT	R	0h	Channel 1 CRC Pattern Compression Complete Status Flag. This bit is cleared by writing a 1 to it only. Writing 0 has no effect. This bit is only set in Semi-CPU mode. 0 = No CRC pattern compression complete interrupt is active 1 = CRC pattern compression complete interrupt is active

Copyright © 2025 Texas Instruments Incorporated

11.8.8.6.6.7 CRC_INT_OFFSET_REG Register (Offset = 30h) [reset = 0h]

CRC_INT_OFFSET_REG is shown in Figure 11-775 and described in Table 11-2005.

Return to the Table 11-1998.

Contains the interrupt offset vector address

Figure 11-775. CRC_INT_OFFSET_REG Register

31	30	29	28	27	26	25	24	23	22	21	20	19	18	17	16	15	14	13	12	11	10	9	8	7	6	5	4	3	2	1	0
RESERVED																								OFSTREG							
R-0h																								R/W-0h							

Table 11-2005. CRC_INT_OFFSET_REG Register Field Descriptions

Bit	Field	Type	Reset	Description
31-8	RESERVED	R	0h	
7-0	OFSTREG	R/W	0h	CRC Interrupt Offset. This register indicates the highest priority pending interrupt vector address. Reading the offset register automatically clear the respective interrupt flag. Please reference Table 1–3. for details.

Copyright © 2025 Texas Instruments Incorporated

11.8.8.6.6.8 CRC_BUSY Register (Offset = 38h) [reset = 0h]

CRC_BUSY is shown in Figure 11-776 and described in Table 11-2006.

Return to the Table 11-1998.

Contains the busy flag for each channel

Figure 11-776. CRC_BUSY Register

31	30	29	28	27	26	25	24
RESERVED							NU40
R-0h							R-0h
23	22	21	20	19	18	17	16
RESERVED							NU39
R-0h							R-0h
15	14	13	12	11	10	9	8
RESERVED							Ch2_BUSY
R-0h							R-0h
7	6	5	4	3	2	1	0
RESERVED							CH1_BUSY
R-0h							R-0h

Table 11-2006. CRC_BUSY Register Field Descriptions

Bit	Field	Type	Reset	Description
31-25	RESERVED	R	0h	
24	NU40	R	0h	Reserved
23-17	RESERVED	R	0h	
16	NU39	R	0h	Reserved
15-9	RESERVED	R	0h	
8	Ch2_BUSY	R	0h	Ch2_BUSY. During AUTO mode, the busy flag is set when the first data pattern of the block is compressed and remains set until the the last data pattern of the block is compressed. The flag is cleared when the last data pattern of the block is compressed.
7-1	RESERVED	R	0h	
0	CH1_BUSY	R	0h	CH1_BUSY. During AUTO mode, the busy flag is set when the first data pattern of the block is compressed and remains set until the the last data pattern of the block is compressed. The flag is cleared when the last data pattern of the block is compressed.

Copyright © 2025 Texas Instruments Incorporated

11.8.8.6.6.9 CRC_PCOUNT_REG1 Register (Offset = 40h) [reset = 0h]

CRC_PCOUNT_REG1 is shown in Figure 11-777 and described in Table 11-2007.

Return to the Table 11-1998.

Channel 1 preload register for the pattern count

Figure 11-777. CRC_PCOUNT_REG1 Register

31	30	29	28	27	26	25	24	23	22	21	20	19	18	17	16	15	14	13	12	11	10	9	8	7	6	5	4	3	2	1	0
RESERVED												CRC_PAT_COUNT1																				
R-0h												R/W-0h																			

Table 11-2007. CRC_PCOUNT_REG1 Register Field Descriptions

Bit	Field	Type	Reset	Description
31-20	RESERVED	R	0h	
19-0	CRC_PAT_COUNT1	R/W	0h	Channel 1 Pattern Counter Preload Register. This register con- tains the number of data patterns in one sector to be compressed before a CRC is performed.

Copyright © 2025 Texas Instruments Incorporated

11.8.8.6.6.10 CRC_SCOUNT_REG1 Register (Offset = 44h) [reset = 0h]

CRC_SCOUNT_REG1 is shown in Figure 11-778 and described in Table 11-2008.

Return to the Table 11-1998.

Channel 1 preload register for the sector count

Figure 11-778. CRC_SCOUNT_REG1 Register

31	30	29	28	27	26	25	24	23	22	21	20	19	18	17	16	15	14	13	12	11	10	9	8	7	6	5	4	3	2	1	0
RESERVED																CRC_SEC_COUNT1															
R-0h																R/W-0h															

Table 11-2008. CRC_SCOUNT_REG1 Register Field Descriptions

Bit	Field	Type	Reset	Description
31-16	RESERVED	R	0h	
15-0	CRC_SEC_COUNT1	R/W	0h	Channel 1 Sector Counter Preload Register. This register con- tains the number of sectors in one block of memory.

Copyright © 2025 Texas Instruments Incorporated

11.8.8.6.6.11 CRC_CURSEC_REG1 Register (Offset = 48h) [reset = 0h]

CRC_CURSEC_REG1 is shown in Figure 11-779 and described in Table 11-2009.

Return to the Table 11-1998.

Channel 1 current sector register contains the sector number which causes CRC failure

Figure 11-779. CRC_CURSEC_REG1 Register

31	30	29	28	27	26	25	24	23	22	21	20	19	18	17	16	15	14	13	12	11	10	9	8	7	6	5	4	3	2	1	0
RESERVED																CRC_CURSEC1															
R-0h																R/W-0h															

Table 11-2009. CRC_CURSEC_REG1 Register Field Descriptions

Bit	Field	Type	Reset	Description
31-16	RESERVED	R	0h	
15-0	CRC_CURSEC1	R/W	0h	Channel 1 Current Sector ID Register. In AUTO mode, this register contains the current sector number of which the signature verification fails. The sector counter is a free running up counter. When a sector fails, the erroneous sector number is logged into current sector ID register and the CRC fail interrupt is generated The sector ID register is frozen until it is read and the CRC fail status bit is cleared by CPU. While it is frozen, it does not capture another erroneous sector number. When this condition happens, an overrun interrupt is generated instead. Once the register is read and the CRC fail interrupt flag is cleared it can capture new erro- neous sector number.

Copyright © 2025 Texas Instruments Incorporated

11.8.8.6.6.12 CRC_WDTOPLD1 Register (Offset = 4Ch) [reset = 0h]

CRC_WDTOPLD1 is shown in Figure 11-780 and described in Table 11-2010.

Return to the Table 11-1998.

Channel 1 timeout pre-load value to check if within a given time DMA initiates a block transfer

Figure 11-780. CRC_WDTOPLD1 Register

31	30	29	28	27	26	25	24	23	22	21	20	19	18	17	16	15	14	13	12	11	10	9	8	7	6	5	4	3	2	1	0
RESERVED								CRC_WDTOPLD1																							
R-0h								R/W-0h																							

Table 11-2010. CRC_WDTOPLD1 Register Field Descriptions

Bit	Field	Type	Reset	Description
31-24	RESERVED	R	0h	
23-0	CRC_WDTOPLD1	R/W	0h	Channel 1 Watchdog Timeout Counter Preload Register. This register contains the number of clock cycles within which the DMA must transfer the next block of data patterns.

Copyright © 2025 Texas Instruments Incorporated

11.8.8.6.6.13 CRC_BCTOPLD1 Register (Offset = 50h) [reset = 0h]

CRC_BCTOPLD1 is shown in Figure 11-781 and described in Table 11-2011.

Return to the Table 11-1998.

Channel 1 timeout pre-load value to check if one block of patterns are compressed with a given time

Figure 11-781. CRC_BCTOPLD1 Register

31	30	29	28	27	26	25	24	23	22	21	20	19	18	17	16	15	14	13	12	11	10	9	8	7	6	5	4	3	2	1	0
RESERVED								CRC_BCTOPLD1																							
R-0h								R/W-0h																							

Table 11-2011. CRC_BCTOPLD1 Register Field Descriptions

Bit	Field	Type	Reset	Description
31-24	RESERVED	R	0h	
23-0	CRC_BCTOPLD1	R/W	0h	Channel 1 Block Complete Timeout Counter Preload Regis- ter. This register contains the number of clock cycles within which the CRC for an entire block needs to complete before a timeout interrupt is generated.

Copyright © 2025 Texas Instruments Incorporated

11.8.8.6.6.14 PSA_SIGREGL1 Register (Offset = 60h) [reset = 0h]

PSA_SIGREGL1 is shown in Figure 11-782 and described in Table 11-2012.

Return to the Table 11-1998.

Channel 1 PSA signature low register

Figure 11-782. PSA_SIGREGL1 Register

31	30	29	28	27	26	25	24	23	22	21	20	19	18	17	16	15	14	13	12	11	10	9	8	7	6	5	4	3	2	1	0
PSASIG1_31_0																															
R/W-0h																															

Table 11-2012. PSA_SIGREGL1 Register Field Descriptions

Bit	Field	Type	Reset	Description
31-0	PSASIG1_31_0	R/W	0h	Channel 1 PSA Signature Low Register. This register contains the value stored at PSASIG1[31:0] register.

Copyright © 2025 Texas Instruments Incorporated

11.8.8.6.6.15 PSA_SIGREGH1 Register (Offset = 64h) [reset = 0h]

PSA_SIGREGH1 is shown in Figure 11-783 and described in Table 11-2013.

Return to the Table 11-1998.

Channel 1 PSA signature high register

Figure 11-783. PSA_SIGREGH1 Register

31	30	29	28	27	26	25	24	23	22	21	20	19	18	17	16	15	14	13	12	11	10	9	8	7	6	5	4	3	2	1	0
PSA_SIG1_63_32																															
R/W-0h																															

Table 11-2013. PSA_SIGREGH1 Register Field Descriptions

Bit	Field	Type	Reset	Description
31-0	PSA_SIG1_63_32	R/W	0h	Channel 1 PSA Signature High Register. This register contains the value stored at PSASIG1[63:32] register.

Copyright © 2025 Texas Instruments Incorporated

11.8.8.6.6.16 CRC_REGL1 Register (Offset = 68h) [reset = 0h]

CRC_REGL1 is shown in Figure 11-784 and described in Table 11-2014.

Return to the Table 11-1998.

Channel 1 CRC value low register

Figure 11-784. CRC_REGL1 Register

31	30	29	28	27	26	25	24	23	22	21	20	19	18	17	16	15	14	13	12	11	10	9	8	7	6	5	4	3	2	1	0
CRC1_31_0																															
R/W-0h																															

Table 11-2014. CRC_REGL1 Register Field Descriptions

Bit	Field	Type	Reset	Description
31-0	CRC1_31_0	R/W	0h	Channel 1 CRC Value Low Register. This register contains the current known good signature value stored at CRC1[31:0] regis- ter.

Copyright © 2025 Texas Instruments Incorporated

11.8.8.6.6.17 CRC_REGH1 Register (Offset = 6Ch) [reset = 0h]

CRC_REGH1 is shown in Figure 11-785 and described in Table 11-2015.

Return to the Table 11-1998.

Channel 1 CRC value high register

Figure 11-785. CRC_REGH1 Register

31	30	29	28	27	26	25	24	23	22	21	20	19	18	17	16	15	14	13	12	11	10	9	8	7	6	5	4	3	2	1	0
CRC1_63_32																															
R/W-0h																															

Table 11-2015. CRC_REGH1 Register Field Descriptions

Bit	Field	Type	Reset	Description
31-0	CRC1_63_32	R/W	0h	Channel 1 CRC Value High Register. This register contains the current known good signature value stored at CRC1[63:32] register.

Copyright © 2025 Texas Instruments Incorporated

11.8.8.6.6.18 PSA_SECSIGREGL1 Register (Offset = 70h) [reset = 0h]

PSA_SECSIGREGL1 is shown in Figure 11-786 and described in Table 11-2016.

Return to the Table 11-1998.

Channel 1 PSA sector signature low regis-ter

Figure 11-786. PSA_SECSIGREGL1 Register

31	30	29	28	27	26	25	24	23	22	21	20	19	18	17	16	15	14	13	12	11	10	9	8	7	6	5	4	3	2	1	0
PSASECSIG1_31_0																															
R-0h																															

Table 11-2016. PSA_SECSIGREGL1 Register Field Descriptions

Bit	Field	Type	Reset	Description
31-0	PSASECSIG1_31_0	R	0h	Channel 1 PSA Sector Signature Low Register. This register contains the value stored at PSASECSIG1[31:0] register.

Copyright © 2025 Texas Instruments Incorporated

11.8.8.6.6.19 PSA_SECSIGREGH1 Register (Offset = 74h) [reset = 0h]

PSA_SECSIGREGH1 is shown in Figure 11-787 and described in Table 11-2017.

Return to the Table 11-1998.

Channel 1 PSA sector signature high regis-ter

Figure 11-787. PSA_SECSIGREGH1 Register

31	30	29	28	27	26	25	24	23	22	21	20	19	18	17	16	15	14	13	12	11	10	9	8	7	6	5	4	3	2	1	0
PSASECSIG1_63_32																															
R-0h																															

Table 11-2017. PSA_SECSIGREGH1 Register Field Descriptions

Bit	Field	Type	Reset	Description
31-0	PSASECSIG1_63_32	R	0h	Channel 1 PSA Sector Signature High Register. This register contains the value stored at PSASECSIG1[63:32] register.

Copyright © 2025 Texas Instruments Incorporated

11.8.8.6.6.20 RAW_DATAREGL1 Register (Offset = 78h) [reset = 0h]

RAW_DATAREGL1 is shown in Figure 11-788 and described in Table 11-2018.

Return to the Table 11-1998.

Channel 1 un-compressed raw data low register

Figure 11-788. RAW_DATAREGL1 Register

31	30	29	28	27	26	25	24	23	22	21	20	19	18	17	16	15	14	13	12	11	10	9	8	7	6	5	4	3	2	1	0
RAW_DATA1_31_0																															
R-0h																															

Table 11-2018. RAW_DATAREGL1 Register Field Descriptions

Bit	Field	Type	Reset	Description
31-0	RAW_DATA1_31_0	R	0h	Channel 1 Raw Data Low Register. This register contains bit 31:0 of the un-compressed raw data.

Copyright © 2025 Texas Instruments Incorporated

11.8.8.6.6.21 RAW_DATAREGH1 Register (Offset = 7Ch) [reset = 0h]

RAW_DATAREGH1 is shown in Figure 11-789 and described in Table 11-2019.

Return to the Table 11-1998.

Channel 1 un-compressed raw data high register

Figure 11-789. RAW_DATAREGH1 Register

31	30	29	28	27	26	25	24	23	22	21	20	19	18	17	16	15	14	13	12	11	10	9	8	7	6	5	4	3	2	1	0
RAW_DATA1_63_32																															
R-0h																															

Table 11-2019. RAW_DATAREGH1 Register Field Descriptions

Bit	Field	Type	Reset	Description
31-0	RAW_DATA1_63_32	R	0h	Channel 1 Raw Data High Register. This register contains bit 63:32 of the un-compressed raw data.

Copyright © 2025 Texas Instruments Incorporated

11.8.8.6.6.22 CRC_PCOUNT_REG2 Register (Offset = 80h) [reset = 0h]

CRC_PCOUNT_REG2 is shown in Figure 11-790 and described in Table 11-2020.

Return to the Table 11-1998.

Channel 2 preload register for the pattern count

Figure 11-790. CRC_PCOUNT_REG2 Register

31	30	29	28	27	26	25	24	23	22	21	20	19	18	17	16	15	14	13	12	11	10	9	8	7	6	5	4	3	2	1	0
RESERVED												CRC_PAT_COUNT2																				
R-0h												R/W-0h																			

Table 11-2020. CRC_PCOUNT_REG2 Register Field Descriptions

Bit	Field	Type	Reset	Description
31-20	RESERVED	R	0h	
19-0	CRC_PAT_COUNT2	R/W	0h	Channel 2 Pattern Counter Preload Register. This register con- tains the number of data patterns in one sector to be compressed before a CRC is performed.

Copyright © 2025 Texas Instruments Incorporated

11.8.8.6.6.23 CRC_SCOUNT_REG2 Register (Offset = 84h) [reset = 0h]

CRC_SCOUNT_REG2 is shown in Figure 11-791 and described in Table 11-2021.

Return to the Table 11-1998.

Channel 2 preload register for the sector count

Figure 11-791. CRC_SCOUNT_REG2 Register

31	30	29	28	27	26	25	24	23	22	21	20	19	18	17	16	15	14	13	12	11	10	9	8	7	6	5	4	3	2	1	0
RESERVED																CRC_SEC_COUNT2															
R-0h																R/W-0h															

Table 11-2021. CRC_SCOUNT_REG2 Register Field Descriptions

Bit	Field	Type	Reset	Description
31-16	RESERVED	R	0h	
15-0	CRC_SEC_COUNT2	R/W	0h	Channel 2 Sector Counter Preload Register. This register con- tains the number of sectors in one block of memory.

Copyright © 2025 Texas Instruments Incorporated

11.8.8.6.6.24 CRC_CURSEC_REG2 Register (Offset = 88h) [reset = 0h]

CRC_CURSEC_REG2 is shown in Figure 11-792 and described in Table 11-2022.

Return to the Table 11-1998.

Channel 2 current sector register contains the sector number which causes CRC fail-ure

Figure 11-792. CRC_CURSEC_REG2 Register

31	30	29	28	27	26	25	24	23	22	21	20	19	18	17	16	15	14	13	12	11	10	9	8	7	6	5	4	3	2	1	0
RESERVED																CRC_CURSEC2															
R-0h																R/W-0h															

Table 11-2022. CRC_CURSEC_REG2 Register Field Descriptions

Bit	Field	Type	Reset	Description
31-16	RESERVED	R	0h	
15-0	CRC_CURSEC2	R/W	0h	Channel 2 Current Sector ID Register. In AUTO mode, this register contains the current sector number of which the signature verification fails. The sector counter is a free running up counter. When a sector fails, the erroneous sector number is logged into current sector ID register and the CRC fail interrupt is generated The sector ID register is frozen until it is read and the CRC fail status bit is cleared by CPU. While it is frozen, it does not capture another erroneous sector number. When this condition happens, an overrun interrupt is generated instead. Once the register is read and the CRC fail interrupt flag is cleared it can capture new erro- neous sector number.

Copyright © 2025 Texas Instruments Incorporated

11.8.8.6.6.25 CRC_WDTOPLD2 Register (Offset = 8Ch) [reset = 0h]

CRC_WDTOPLD2 is shown in Figure 11-793 and described in Table 11-2023.

Return to the Table 11-1998.

Channel 2 timeout pre-load value to check if within a given time DMA initiates a block transfer

Figure 11-793. CRC_WDTOPLD2 Register

31	30	29	28	27	26	25	24	23	22	21	20	19	18	17	16	15	14	13	12	11	10	9	8	7	6	5	4	3	2	1	0
RESERVED								CRC_WDTOPLD2																							
R-0h								R/W-0h																							

Table 11-2023. CRC_WDTOPLD2 Register Field Descriptions

Bit	Field	Type	Reset	Description
31-24	RESERVED	R	0h	
23-0	CRC_WDTOPLD2	R/W	0h	Channel 2 Watchdog Timeout Counter Preload Register. This register contains the number of clock cycles within which the DMA must transfer the next block of data patterns.

Copyright © 2025 Texas Instruments Incorporated

11.8.8.6.6.26 CRC_BCTOPLD2 Register (Offset = 90h) [reset = 0h]

CRC_BCTOPLD2 is shown in Figure 11-794 and described in Table 11-2024.

Return to the Table 11-1998.

Channel 2 timeout pre-load value to check if one block of patterns are compressed with a given time

Figure 11-794. CRC_BCTOPLD2 Register

31	30	29	28	27	26	25	24	23	22	21	20	19	18	17	16	15	14	13	12	11	10	9	8	7	6	5	4	3	2	1	0
RESERVED								CRC_BCTOPLD2																							
R-0h								R/W-0h																							

Table 11-2024. CRC_BCTOPLD2 Register Field Descriptions

Bit	Field	Type	Reset	Description
31-24	RESERVED	R	0h	
23-0	CRC_BCTOPLD2	R/W	0h	Channel 2 Block Complete Timeout Counter Preload Regis- ter. This register contains the number of clock cycles within which the CRC for an entire block needs to complete before a timeout interrupt is generated.

Copyright © 2025 Texas Instruments Incorporated

11.8.8.6.6.27 PSA_SIGREGL2 Register (Offset = A0h) [reset = 0h]

PSA_SIGREGL2 is shown in Figure 11-795 and described in Table 11-2025.

Return to the Table 11-1998.

Channel 2 PSA signature low register

Figure 11-795. PSA_SIGREGL2 Register

31	30	29	28	27	26	25	24	23	22	21	20	19	18	17	16	15	14	13	12	11	10	9	8	7	6	5	4	3	2	1	0
PSASIG2_31_0																															
R/W-0h																															

Table 11-2025. PSA_SIGREGL2 Register Field Descriptions

Bit	Field	Type	Reset	Description
31-0	PSASIG2_31_0	R/W	0h	Channel 2 PSA Signature Low Register. This register contains the value stored at PSASIG2[31:0] register.

Copyright © 2025 Texas Instruments Incorporated

11.8.8.6.6.28 PSA_SIGREGH2 Register (Offset = A4h) [reset = 0h]

PSA_SIGREGH2 is shown in Figure 11-796 and described in Table 11-2026.

Return to the Table 11-1998.

Channel 2 PSA signature high register

Figure 11-796. PSA_SIGREGH2 Register

31	30	29	28	27	26	25	24	23	22	21	20	19	18	17	16	15	14	13	12	11	10	9	8	7	6	5	4	3	2	1	0
PSA_SIG2_63_32																															
R/W-0h																															

Table 11-2026. PSA_SIGREGH2 Register Field Descriptions

Bit	Field	Type	Reset	Description
31-0	PSA_SIG2_63_32	R/W	0h	Channel 2 PSA Signature High Register. This register contains the value stored at PSASIG2[63:32] register.

Copyright © 2025 Texas Instruments Incorporated

11.8.8.6.6.29 CRC_REGL2 Register (Offset = A8h) [reset = 0h]

CRC_REGL2 is shown in Figure 11-797 and described in Table 11-2027.

Return to the Table 11-1998.

Channel 2 CRC value low register

Figure 11-797. CRC_REGL2 Register

31	30	29	28	27	26	25	24	23	22	21	20	19	18	17	16	15	14	13	12	11	10	9	8	7	6	5	4	3	2	1	0
CRC2_31_0																															
R/W-0h																															

Table 11-2027. CRC_REGL2 Register Field Descriptions

Bit	Field	Type	Reset	Description
31-0	CRC2_31_0	R/W	0h	Channel 2 CRC Value Low Register. This register contains the current known good signature value stored at CRC2[31:0] regis- ter.

Copyright © 2025 Texas Instruments Incorporated

11.8.8.6.6.30 CRC_REGH2 Register (Offset = ACh) [reset = 0h]

CRC_REGH2 is shown in Figure 11-798 and described in Table 11-2028.

Return to the Table 11-1998.

Channel 2 CRC value high register

Figure 11-798. CRC_REGH2 Register

31	30	29	28	27	26	25	24	23	22	21	20	19	18	17	16	15	14	13	12	11	10	9	8	7	6	5	4	3	2	1	0
CRC2_63_32																															
R/W-0h																															

Table 11-2028. CRC_REGH2 Register Field Descriptions

Bit	Field	Type	Reset	Description
31-0	CRC2_63_32	R/W	0h	Channel 2 CRC Value High Register. This register contains the current known good signature value stored at CRC2[63:32] register.

Copyright © 2025 Texas Instruments Incorporated

11.8.8.6.6.31 PSA_SECSIGREGL2 Register (Offset = B0h) [reset = 0h]

PSA_SECSIGREGL2 is shown in Figure 11-799 and described in Table 11-2029.

Return to the Table 11-1998.

Channel 2 PSA sector signature low regis-ter

Figure 11-799. PSA_SECSIGREGL2 Register

31	30	29	28	27	26	25	24	23	22	21	20	19	18	17	16	15	14	13	12	11	10	9	8	7	6	5	4	3	2	1	0
PSASECSIG2_31_0																															
R-0h																															

Table 11-2029. PSA_SECSIGREGL2 Register Field Descriptions

Bit	Field	Type	Reset	Description
31-0	PSASECSIG2_31_0	R	0h	Channel 2 PSA Sector Signature Low Register. This register contains the value stored at PSASECSIG2[31:0] register.

Copyright © 2025 Texas Instruments Incorporated

11.8.8.6.6.32 PSA_SECSIGREGH2 Register (Offset = B4h) [reset = 0h]

PSA_SECSIGREGH2 is shown in Figure 11-800 and described in Table 11-2030.

Return to the Table 11-1998.

Channel 2 PSA sector signature high regis-ter

Figure 11-800. PSA_SECSIGREGH2 Register

31	30	29	28	27	26	25	24	23	22	21	20	19	18	17	16	15	14	13	12	11	10	9	8	7	6	5	4	3	2	1	0
PSASECSIG2_63_32																															
R-0h																															

Table 11-2030. PSA_SECSIGREGH2 Register Field Descriptions

Bit	Field	Type	Reset	Description
31-0	PSASECSIG2_63_32	R	0h	Channel 2 PSA Sector Signature High Register. This register contains the value stored at PSASECSIG2[63:32] register.

Copyright © 2025 Texas Instruments Incorporated

11.8.8.6.6.33 RAW_DATAREGL2 Register (Offset = B8h) [reset = 0h]

RAW_DATAREGL2 is shown in Figure 11-801 and described in Table 11-2031.

Return to the Table 11-1998.

Channel 2 un-compressed raw data low register

Figure 11-801. RAW_DATAREGL2 Register

31	30	29	28	27	26	25	24	23	22	21	20	19	18	17	16	15	14	13	12	11	10	9	8	7	6	5	4	3	2	1	0
RAW_DATA2_31_0																															
R-0h																															

Table 11-2031. RAW_DATAREGL2 Register Field Descriptions

Bit	Field	Type	Reset	Description
31-0	RAW_DATA2_31_0	R	0h	Channel 2 Raw Data Low Register. This register contains bit 31:0 of the un-compressed raw data.

Copyright © 2025 Texas Instruments Incorporated

11.8.8.6.6.34 RAW_DATAREGH2 Register (Offset = BCh) [reset = 0h]

RAW_DATAREGH2 is shown in Figure 11-802 and described in Table 11-2032.

Return to the Table 11-1998.

Channel 2 un-compressed raw data high Register

Figure 11-802. RAW_DATAREGH2 Register

31	30	29	28	27	26	25	24	23	22	21	20	19	18	17	16	15	14	13	12	11	10	9	8	7	6	5	4	3	2	1	0
RAW_DATA2_63_32																															
R-0h																															

Table 11-2032. RAW_DATAREGH2 Register Field Descriptions

Bit	Field	Type	Reset	Description
31-0	RAW_DATA2_63_32	R	0h	Channel 2 Raw Data High Register. This register contains bit 63:32 of the un-compressed raw data.

Copyright © 2025 Texas Instruments Incorporated

11.8.8.6.6.35 CRC_PCOUNT_REG3 Register (Offset = C0h) [reset = 0h]

CRC_PCOUNT_REG3 is shown in Figure 11-803 and described in Table 11-2033.

Return to the Table 11-1998.

Channel 3 preload register for the pattern count

Figure 11-803. CRC_PCOUNT_REG3 Register

31	30	29	28	27	26	25	24	23	22	21	20	19	18	17	16	15	14	13	12	11	10	9	8	7	6	5	4	3	2	1	0
RESERVED												NU41																			
R-0h												R-0h																			

Table 11-2033. CRC_PCOUNT_REG3 Register Field Descriptions

Bit	Field	Type	Reset	Description
31-20	RESERVED	R	0h	
19-0	NU41	R	0h	Reserved

Copyright © 2025 Texas Instruments Incorporated

11.8.8.6.6.36 CRC_SCOUNT_REG3 Register (Offset = C4h) [reset = 0h]

CRC_SCOUNT_REG3 is shown in Figure 11-804 and described in Table 11-2034.

Return to the Table 11-1998.

Channel 3 preload register for the sector count

Figure 11-804. CRC_SCOUNT_REG3 Register

31	30	29	28	27	26	25	24	23	22	21	20	19	18	17	16	15	14	13	12	11	10	9	8	7	6	5	4	3	2	1	0
RESERVED																NU42															
R-0h																R-0h															

Table 11-2034. CRC_SCOUNT_REG3 Register Field Descriptions

Bit	Field	Type	Reset	Description
31-16	RESERVED	R	0h	
15-0	NU42	R	0h	Reserved

Copyright © 2025 Texas Instruments Incorporated

11.8.8.6.6.37 CRC_CURSEC_REG3 Register (Offset = C8h) [reset = 0h]

CRC_CURSEC_REG3 is shown in Figure 11-805 and described in Table 11-2035.

Return to the Table 11-1998.

Channel 3 current sector register contains the sector number which causes CRC fail-ure

Figure 11-805. CRC_CURSEC_REG3 Register

31	30	29	28	27	26	25	24	23	22	21	20	19	18	17	16	15	14	13	12	11	10	9	8	7	6	5	4	3	2	1	0
RESERVED																NU43															
R-0h																R-0h															

Table 11-2035. CRC_CURSEC_REG3 Register Field Descriptions

Bit	Field	Type	Reset	Description
31-16	RESERVED	R	0h	
15-0	NU43	R	0h	Reserved

Copyright © 2025 Texas Instruments Incorporated

11.8.8.6.6.38 CRC_WDTOPLD3 Register (Offset = CCh) [reset = 0h]

CRC_WDTOPLD3 is shown in Figure 11-806 and described in Table 11-2036.

Return to the Table 11-1998.

Channel 3 timeout pre-load value to check if within a given time DMA initiates a block transfer

Figure 11-806. CRC_WDTOPLD3 Register

31	30	29	28	27	26	25	24	23	22	21	20	19	18	17	16	15	14	13	12	11	10	9	8	7	6	5	4	3	2	1	0
RESERVED								NU44																							
R-0h								R-0h																							

Table 11-2036. CRC_WDTOPLD3 Register Field Descriptions

Bit	Field	Type	Reset	Description
31-24	RESERVED	R	0h	
23-0	NU44	R	0h	Reserved

Copyright © 2025 Texas Instruments Incorporated

11.8.8.6.6.39 CRC_BCTOPLD3 Register (Offset = D0h) [reset = 0h]

CRC_BCTOPLD3 is shown in Figure 11-807 and described in Table 11-2037.

Return to the Table 11-1998.

Channel 3 timeout pre-load value to check if one block of patterns are compressed with a given time

Figure 11-807. CRC_BCTOPLD3 Register

31	30	29	28	27	26	25	24	23	22	21	20	19	18	17	16	15	14	13	12	11	10	9	8	7	6	5	4	3	2	1	0
RESERVED								NU45																							
R-0h								R-0h																							

Table 11-2037. CRC_BCTOPLD3 Register Field Descriptions

Bit	Field	Type	Reset	Description
31-24	RESERVED	R	0h	
23-0	NU45	R	0h	Reserved

Copyright © 2025 Texas Instruments Incorporated

11.8.8.6.6.40 PSA_SIGREGL3 Register (Offset = E0h) [reset = 0h]

PSA_SIGREGL3 is shown in Figure 11-808 and described in Table 11-2038.

Return to the Table 11-1998.

Channel 3 PSA signature low register

Figure 11-808. PSA_SIGREGL3 Register

31	30	29	28	27	26	25	24	23	22	21	20	19	18	17	16	15	14	13	12	11	10	9	8	7	6	5	4	3	2	1	0
NU46																															
R-0h																															

Table 11-2038. PSA_SIGREGL3 Register Field Descriptions

Bit	Field	Type	Reset	Description
31-0	NU46	R	0h	Reserved

Copyright © 2025 Texas Instruments Incorporated

11.8.8.6.6.41 PSA_SIGREGH3 Register (Offset = E4h) [reset = 0h]

PSA_SIGREGH3 is shown in Figure 11-809 and described in Table 11-2039.

Return to the Table 11-1998.

Channel 3 PSA signature high register

Figure 11-809. PSA_SIGREGH3 Register

31	30	29	28	27	26	25	24	23	22	21	20	19	18	17	16	15	14	13	12	11	10	9	8	7	6	5	4	3	2	1	0
NU47																															
R-0h																															

Table 11-2039. PSA_SIGREGH3 Register Field Descriptions

Bit	Field	Type	Reset	Description
31-0	NU47	R	0h	Reserved

Copyright © 2025 Texas Instruments Incorporated

11.8.8.6.6.42 CRC_REGL3 Register (Offset = E8h) [reset = 0h]

CRC_REGL3 is shown in Figure 11-810 and described in Table 11-2040.

Return to the Table 11-1998.

Channel 3 CRC value low register

Figure 11-810. CRC_REGL3 Register

31	30	29	28	27	26	25	24	23	22	21	20	19	18	17	16	15	14	13	12	11	10	9	8	7	6	5	4	3	2	1	0
NU48																															
R-0h																															

Table 11-2040. CRC_REGL3 Register Field Descriptions

Bit	Field	Type	Reset	Description
31-0	NU48	R	0h	Reserved

Copyright © 2025 Texas Instruments Incorporated

11.8.8.6.6.43 CRC_REGH3 Register (Offset = ECh) [reset = 0h]

CRC_REGH3 is shown in Figure 11-811 and described in Table 11-2041.

Return to the Table 11-1998.

Channel 3 CRC value high register

Figure 11-811. CRC_REGH3 Register

31	30	29	28	27	26	25	24	23	22	21	20	19	18	17	16	15	14	13	12	11	10	9	8	7	6	5	4	3	2	1	0
NU49																															
R-0h																															

Table 11-2041. CRC_REGH3 Register Field Descriptions

Bit	Field	Type	Reset	Description
31-0	NU49	R	0h	Reserved

Copyright © 2025 Texas Instruments Incorporated

11.8.8.6.6.44 PSA_SECSIGREGL3 Register (Offset = F0h) [reset = 0h]

PSA_SECSIGREGL3 is shown in Figure 11-812 and described in Table 11-2042.

Return to the Table 11-1998.

Channel 3 PSA sector signature low regis-ter

Figure 11-812. PSA_SECSIGREGL3 Register

31	30	29	28	27	26	25	24	23	22	21	20	19	18	17	16	15	14	13	12	11	10	9	8	7	6	5	4	3	2	1	0
NU50																															
R-0h																															

Table 11-2042. PSA_SECSIGREGL3 Register Field Descriptions

Bit	Field	Type	Reset	Description
31-0	NU50	R	0h	Reserved

Copyright © 2025 Texas Instruments Incorporated

11.8.8.6.6.45 PSA_SECSIGREGH3 Register (Offset = F4h) [reset = 0h]

PSA_SECSIGREGH3 is shown in Figure 11-813 and described in Table 11-2043.

Return to the Table 11-1998.

Channel 3 PSA sector signature high regis-ter

Figure 11-813. PSA_SECSIGREGH3 Register

31	30	29	28	27	26	25	24	23	22	21	20	19	18	17	16	15	14	13	12	11	10	9	8	7	6	5	4	3	2	1	0
NU51																															
R-0h																															

Table 11-2043. PSA_SECSIGREGH3 Register Field Descriptions

Bit	Field	Type	Reset	Description
31-0	NU51	R	0h	Reserved

Copyright © 2025 Texas Instruments Incorporated

11.8.8.6.6.46 RAW_DATAREGL3 Register (Offset = F8h) [reset = 0h]

RAW_DATAREGL3 is shown in Figure 11-814 and described in Table 11-2044.

Return to the Table 11-1998.

Channel 3 un-compressed raw data low register

Figure 11-814. RAW_DATAREGL3 Register

31	30	29	28	27	26	25	24	23	22	21	20	19	18	17	16	15	14	13	12	11	10	9	8	7	6	5	4	3	2	1	0
NU52																															
R-0h																															

Table 11-2044. RAW_DATAREGL3 Register Field Descriptions

Bit	Field	Type	Reset	Description
31-0	NU52	R	0h	Reserved

Copyright © 2025 Texas Instruments Incorporated

11.8.8.6.6.47 RAW_DATAREGH3 Register (Offset = FCh) [reset = 0h]

RAW_DATAREGH3 is shown in Figure 11-815 and described in Table 11-2045.

Return to the Table 11-1998.

Channel 3 un-compressed raw data high Register

Figure 11-815. RAW_DATAREGH3 Register

31	30	29	28	27	26	25	24	23	22	21	20	19	18	17	16	15	14	13	12	11	10	9	8	7	6	5	4	3	2	1	0
NU53																															
R-0h																															

Table 11-2045. RAW_DATAREGH3 Register Field Descriptions

Bit	Field	Type	Reset	Description
31-0	NU53	R	0h	Reserved

Copyright © 2025 Texas Instruments Incorporated

11.8.8.6.6.48 CRC_PCOUNT_REG4 Register (Offset = 100h) [reset = 0h]

CRC_PCOUNT_REG4 is shown in Figure 11-816 and described in Table 11-2046.

Return to the Table 11-1998.

Channel 4 preload register for the pattern count

Figure 11-816. CRC_PCOUNT_REG4 Register

31	30	29	28	27	26	25	24	23	22	21	20	19	18	17	16	15	14	13	12	11	10	9	8	7	6	5	4	3	2	1	0
RESERVED												NU54																			
R-0h												R-0h																			

Table 11-2046. CRC_PCOUNT_REG4 Register Field Descriptions

Bit	Field	Type	Reset	Description
31-20	RESERVED	R	0h	
19-0	NU54	R	0h	Reserved

Copyright © 2025 Texas Instruments Incorporated

11.8.8.6.6.49 CRC_SCOUNT_REG4 Register (Offset = 104h) [reset = 0h]

CRC_SCOUNT_REG4 is shown in Figure 11-817 and described in Table 11-2047.

Return to the Table 11-1998.

Channel 4 preload register for the sector count

Figure 11-817. CRC_SCOUNT_REG4 Register

31	30	29	28	27	26	25	24	23	22	21	20	19	18	17	16	15	14	13	12	11	10	9	8	7	6	5	4	3	2	1	0
RESERVED																NU55															
R-0h																R-0h															

Table 11-2047. CRC_SCOUNT_REG4 Register Field Descriptions

Bit	Field	Type	Reset	Description
31-16	RESERVED	R	0h	
15-0	NU55	R	0h	Reserved

Copyright © 2025 Texas Instruments Incorporated

11.8.8.6.6.50 CRC_CURSEC_REG4 Register (Offset = 108h) [reset = 0h]

CRC_CURSEC_REG4 is shown in Figure 11-818 and described in Table 11-2048.

Return to the Table 11-1998.

Channel 4 current sector register contains the sector number which causes CRC fail-ure

Figure 11-818. CRC_CURSEC_REG4 Register

31	30	29	28	27	26	25	24	23	22	21	20	19	18	17	16	15	14	13	12	11	10	9	8	7	6	5	4	3	2	1	0
RESERVED																NU56															
R-0h																R-0h															

Table 11-2048. CRC_CURSEC_REG4 Register Field Descriptions

Bit	Field	Type	Reset	Description
31-16	RESERVED	R	0h	
15-0	NU56	R	0h	Reserved

Copyright © 2025 Texas Instruments Incorporated

11.8.8.6.6.51 CRC_WDTOPLD4 Register (Offset = 10Ch) [reset = 0h]

CRC_WDTOPLD4 is shown in Figure 11-819 and described in Table 11-2049.

Return to the Table 11-1998.

Channel 4 timeout pre-load value to check if within a given time DMA initiates a block transfer

Figure 11-819. CRC_WDTOPLD4 Register

31	30	29	28	27	26	25	24	23	22	21	20	19	18	17	16	15	14	13	12	11	10	9	8	7	6	5	4	3	2	1	0
RESERVED								NU57																							
R-0h								R-0h																							

Table 11-2049. CRC_WDTOPLD4 Register Field Descriptions

Bit	Field	Type	Reset	Description
31-24	RESERVED	R	0h	
23-0	NU57	R	0h	Reserved

Copyright © 2025 Texas Instruments Incorporated

11.8.8.6.6.52 CRC_BCTOPLD4 Register (Offset = 110h) [reset = 0h]

CRC_BCTOPLD4 is shown in Figure 11-820 and described in Table 11-2050.

Return to the Table 11-1998.

Channel 4 timeout pre-load value to check if one block of patterns are compressed with a given time

Figure 11-820. CRC_BCTOPLD4 Register

31	30	29	28	27	26	25	24	23	22	21	20	19	18	17	16	15	14	13	12	11	10	9	8	7	6	5	4	3	2	1	0
RESERVED								NU58																							
R-0h								R-0h																							

Table 11-2050. CRC_BCTOPLD4 Register Field Descriptions

Bit	Field	Type	Reset	Description
31-24	RESERVED	R	0h	
23-0	NU58	R	0h	Reserved

Copyright © 2025 Texas Instruments Incorporated

11.8.8.6.6.53 PSA_SIGREGL4 Register (Offset = 120h) [reset = 0h]

PSA_SIGREGL4 is shown in Figure 11-821 and described in Table 11-2051.

Return to the Table 11-1998.

Channel 4 PSA signature low register

Figure 11-821. PSA_SIGREGL4 Register

31	30	29	28	27	26	25	24	23	22	21	20	19	18	17	16	15	14	13	12	11	10	9	8	7	6	5	4	3	2	1	0
NU59																															
R-0h																															

Table 11-2051. PSA_SIGREGL4 Register Field Descriptions

Bit	Field	Type	Reset	Description
31-0	NU59	R	0h	Reserved

Copyright © 2025 Texas Instruments Incorporated

11.8.8.6.6.54 PSA_SIGREGH4 Register (Offset = 124h) [reset = 0h]

PSA_SIGREGH4 is shown in Figure 11-822 and described in Table 11-2052.

Return to the Table 11-1998.

Channel 4 PSA signature high register

Figure 11-822. PSA_SIGREGH4 Register

31	30	29	28	27	26	25	24	23	22	21	20	19	18	17	16	15	14	13	12	11	10	9	8	7	6	5	4	3	2	1	0
NU60																															
R-0h																															

Table 11-2052. PSA_SIGREGH4 Register Field Descriptions

Bit	Field	Type	Reset	Description
31-0	NU60	R	0h	Reserved

Copyright © 2025 Texas Instruments Incorporated

11.8.8.6.6.55 CRC_REGL4 Register (Offset = 128h) [reset = 0h]

CRC_REGL4 is shown in Figure 11-823 and described in Table 11-2053.

Return to the Table 11-1998.

Channel 4 CRC value low register

Figure 11-823. CRC_REGL4 Register

31	30	29	28	27	26	25	24	23	22	21	20	19	18	17	16	15	14	13	12	11	10	9	8	7	6	5	4	3	2	1	0
NU61																															
R-0h																															

Table 11-2053. CRC_REGL4 Register Field Descriptions

Bit	Field	Type	Reset	Description
31-0	NU61	R	0h	Reserved

Copyright © 2025 Texas Instruments Incorporated

11.8.8.6.6.56 CRC_REGH4 Register (Offset = 12Ch) [reset = 0h]

CRC_REGH4 is shown in Figure 11-824 and described in Table 11-2054.

Return to the Table 11-1998.

Channel 4 CRC value high register

Figure 11-824. CRC_REGH4 Register

31	30	29	28	27	26	25	24	23	22	21	20	19	18	17	16	15	14	13	12	11	10	9	8	7	6	5	4	3	2	1	0
NU62																															
R-0h																															

Table 11-2054. CRC_REGH4 Register Field Descriptions

Bit	Field	Type	Reset	Description
31-0	NU62	R	0h	Reserved

Copyright © 2025 Texas Instruments Incorporated

11.8.8.6.6.57 PSA_SECSIGREGL4 Register (Offset = 130h) [reset = 0h]

PSA_SECSIGREGL4 is shown in Figure 11-825 and described in Table 11-2055.

Return to the Table 11-1998.

Channel 4 PSA sector signature low regis-ter

Figure 11-825. PSA_SECSIGREGL4 Register

31	30	29	28	27	26	25	24	23	22	21	20	19	18	17	16	15	14	13	12	11	10	9	8	7	6	5	4	3	2	1	0
NU63																															
R-0h																															

Table 11-2055. PSA_SECSIGREGL4 Register Field Descriptions

Bit	Field	Type	Reset	Description
31-0	NU63	R	0h	Reserved

Copyright © 2025 Texas Instruments Incorporated

11.8.8.6.6.58 PSA_SECSIGREGH4 Register (Offset = 134h) [reset = 0h]

PSA_SECSIGREGH4 is shown in Figure 11-826 and described in Table 11-2056.

Return to the Table 11-1998.

Channel 4 PSA sector signature high regis-ter

Figure 11-826. PSA_SECSIGREGH4 Register

31	30	29	28	27	26	25	24	23	22	21	20	19	18	17	16	15	14	13	12	11	10	9	8	7	6	5	4	3	2	1	0
NU64																															
R-0h																															

Table 11-2056. PSA_SECSIGREGH4 Register Field Descriptions

Bit	Field	Type	Reset	Description
31-0	NU64	R	0h	Reserved

Copyright © 2025 Texas Instruments Incorporated

11.8.8.6.6.59 RAW_DATAREGL4 Register (Offset = 138h) [reset = 0h]

RAW_DATAREGL4 is shown in Figure 11-827 and described in Table 11-2057.

Return to the Table 11-1998.

Channel 4 un-compressed raw data low register

Figure 11-827. RAW_DATAREGL4 Register

31	30	29	28	27	26	25	24	23	22	21	20	19	18	17	16	15	14	13	12	11	10	9	8	7	6	5	4	3	2	1	0
NU65																															
R-0h																															

Table 11-2057. RAW_DATAREGL4 Register Field Descriptions

Bit	Field	Type	Reset	Description
31-0	NU65	R	0h	Reserved

Copyright © 2025 Texas Instruments Incorporated

11.8.8.6.6.60 RAW_DATAREGH4 Register (Offset = 13Ch) [reset = 0h]

RAW_DATAREGH4 is shown in Figure 11-828 and described in Table 11-2058.

Return to the Table 11-1998.

Channel 4 un-compressed raw data high Register

Figure 11-828. RAW_DATAREGH4 Register

31	30	29	28	27	26	25	24	23	22	21	20	19	18	17	16	15	14	13	12	11	10	9	8	7	6	5	4	3	2	1	0
NU66																															
R-0h																															

Table 11-2058. RAW_DATAREGH4 Register Field Descriptions

Bit	Field	Type	Reset	Description
31-0	NU66	R	0h	Reserved

Copyright © 2025 Texas Instruments Incorporated

11.8.8.6.6.61 MCRC_BUS_SEL Register (Offset = 140h) [reset = 7h]

MCRC_BUS_SEL is shown in Figure 11-829 and described in Table 11-2059.

Return to the Table 11-1998.

Disables either or all tracing of data buses

Figure 11-829. MCRC_BUS_SEL Register

31	30	29	28	27	26	25	24
NU67							
R-0h							
23	22	21	20	19	18	17	16
NU67							
R-0h							
15	14	13	12	11	10	9	8
NU67							
R-0h							
7	6	5	4	3	2	1	0
NU67					MEn	DTCMEn	ITCMEn
R-0h					R/W-1h	R/W-1h	R/W-1h

Table 11-2059. MCRC_BUS_SEL Register Field Descriptions

Bit	Field	Type	Reset	Description
31-3	NU67	R	0h	Reserved
2	MEn	R/W	1h	MEn. Enable/disables the tracing of VBUSM 0: Tracing of VBUSM controller bus has been disabled 1: Tracing of VBUSM controller bus has been enabled
1	DTCMEn	R/W	1h	DTCMEn. Enable/disables the tracing of data TCM 0: Tracing of DTCM_ODD and DTCM_EVEN buses have been disabled 1: Tracing of DTCM_ODD and DTCM_EVEN buses have been enabled
0	ITCMEn	R/W	1h	ITCMEn. Enable/disables the tracing of instruction TCM 0: Tracing of ITCM bus has been disabled 1: Tracing of ITCM bus has been enabled

Copyright © 2025 Texas Instruments Incorporated

11.8.8.6.6.62 MCRC_RESERVED Register (Offset = 144h) [reset = 0h]

MCRC_RESERVED is shown in Figure 11-830 and described in Table 11-2060.

Return to the Table 11-1998.

0x144 to 0x1FF is reserved area.

Figure 11-830. MCRC_RESERVED Register

31	30	29	28	27	26	25	24	23	22	21	20	19	18	17	16	15	14	13	12	11	10	9	8	7	6	5	4	3	2	1	0
NU68																															
R-0h																															

Table 11-2060. MCRC_RESERVED Register Field Descriptions

Bit	Field	Type	Reset	Description
31-0	NU68	R	0h	0x144 to 0x1FF is reserved area.

11.8.8.7 Self-Test Controller (STC)

11.8.8.7.1 Integration Spec

11.8.8.7.1.1 STC Memory Map

Table 11-2061. STC Memory Map for AM273x

Name	Start Address	Frame Address (Hex) End	Size	Description
MSS_R5SS_STC	0x02F7 9800	0x02F7 9918	284 Bytes	MSS_STC module configuration registers
DSS_CM4_STC	0x06F7 9400	0x06F7 9518	284 Bytes	DSS_CM4_STC module configuration registers
DSS_DSP_STC	0x06F7 9200	0x06F7 9318	284 Bytes	DSS_STC module configuration registers

11.8.8.7.1.2 Unsupported Features

- Section 11.8.8.7.4.7.1 – Launch-on-last-shift. TR_T =1
- Section 11.8.8.7.4.7.2 – Transition delay fault model. FT =1
- Section 11.8.8.7.4.7.6 – Low-power scan mode. MSS_STC.STCGCR1.LP_SCAN_MODE = 1
- Section 11.8.8.7.4.7.7 and Section 11.8.8.7.4.7.8 – Coverage improvement techniques – MSS_STC.STCGCR1.ROM_ACCESS_INV =1 Mode
- Interval-based testing
- MSS_STC.STC_CLKDIV clock division features

11.8.8.7.2 STC Overview

The enhanced Self-Test Controller (STC) is used to test logic cores based on the On-Product Multiple Input Signature Register (OPMISR) scan compression architecture.

Software-based self-test programs for the cores are available, but offer less test coverage. Due to the complexity of the soft cores, the coverage required can be difficult to achieve and will result in a larger program size.

For these complex cores, on-chip logic BIST support for the self-test is preferred.

The main features of the STC include:

- Implements the OPMISR controller, along with the on-chip self-test controller for the synthesizable module logic, which enables high test coverage.
- The self-test controller facilitates complete isolation of the logical segment under the test from the rest of the system during the self-test run. Configure critical control signals in the initiator and target ports of the logical segment under the test to a safe state.
- The self-tested CPU core initiator bus transaction signals are configured to be in idle mode during the self-test run.

Copyright © 2025 Texas Instruments Incorporated

- Time-out counter for the self-test run as a fail-safe feature.
- Can capture power reduction using dead cycles before and after the capture pulse.
- Coverage improvements technique – ROM inverse access mode. In this, the patterns are read in a reverse order from ROM and applied to the UUT. Pattern randomization due to this approach results in coverage improvement, without an increase in the number of patterns. Corresponding INV_MISR is also stored in the ROM.

A self test segment corresponds to a portion of discreet safety-critical logic which can be tested in isolation from the rest of the system by the self test controller and OPMISR logic.

11.8.8.7.2.1 OPMISR Concept

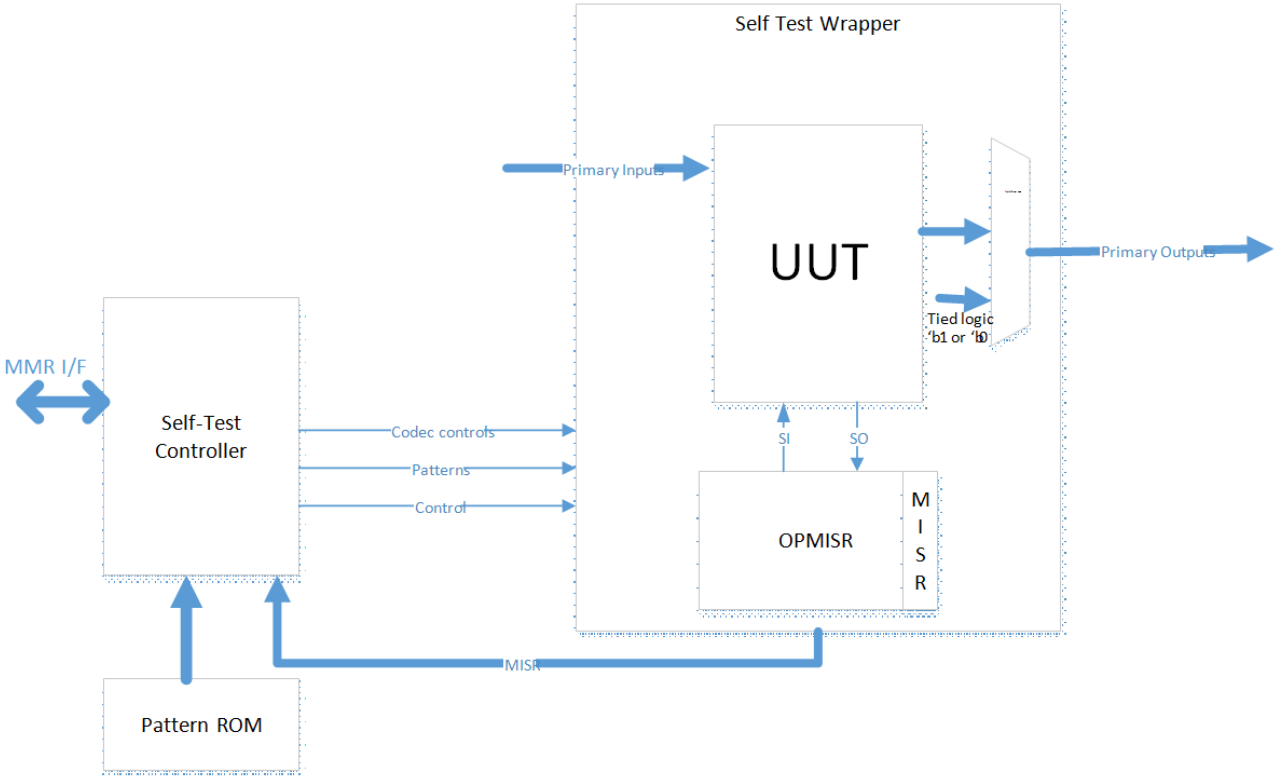

Figure 11-831. OPMISR Conceptual Diagram

The On-Product Multiple-Input Signature Register (OPMISR) is a methodology which moves the test pattern generation on-chip. Logic BIST is implemented on functional partitions (BIST'ed COREs) that are speed-critical and have high gate count. A conceptual diagram of OPMISR implementation is shown in Figure 11-831.

The MISR test structure modifies the typical fullscan scan chain such that each scan data input internally drives many chains. These chains feed to the inserted MISR structure. The chain's values are captured into the MISR during shift, generating a resulting signature that can be shifted out.

A given Unit Under Test (UUT) is scan-inserted, and the scan chains are hooked to the OPMISR logic. The self-test wrapper created around the UUT and the OPMISR logic includes the isolation muxes for the output ports of the core, to ensure that the core and UUT are isolated from the rest of the system during the self-test.

11.8.8.7.3 Block Diagram

The STC module is composed of following blocks:

- ROM interface

Copyright © 2025 Texas Instruments Incorporated

- FSM and sequence control
- Register file
- STC bypass / ATE interface
- Peripheral bus interface (VBUSP interface)

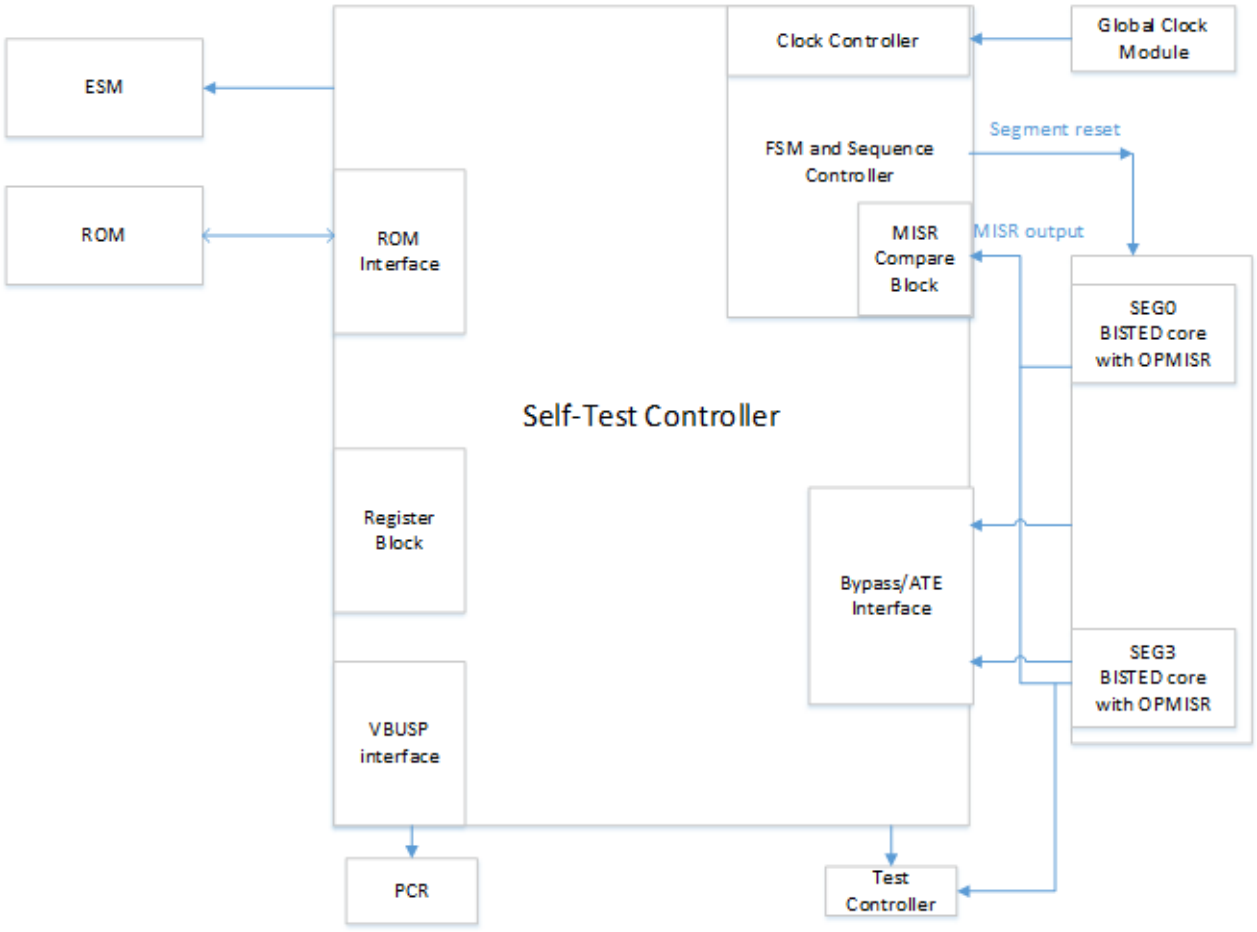

Figure 11-832. Block Diagram for STC With Multiple Segments

11.8.8.7.4 Module Description

11.8.8.7.4.1 ROM Interface

This block handles the ROM address and control signal generation to read the self-test microcode from the ROM. The test microcode, patterns, and golden signature value for each interval is stored in ROM.

Detailed information of the ROM microcode is available at ROM.

11.8.8.7.4.2 FSM and Sequence Control

This block generates the signals and data to OPMISR controller based on the test type and scan chain depth. The sequence of operation per interval is defined in Section 11.8.8.7.4.6.

11.8.8.7.4.2.1 Clock Control

The CLOCK CNTRL sub-block handles the clock selection and clock generation for ROM, OPMISR controller, and BIST'ed CORE clocks.

Copyright © 2025 Texas Instruments Incorporated

11.8.8.7.4.2.2 MISR Compare Block

At the end of the each self-test interval, an 896-bit MISR value from the OPMISR controller is shifted into NSTC. This is compared with the MISR_GOLDEN value, which is copied into a buffered register before the start of the interval. The result is updated into the status registers.

11.8.8.7.4.3 Register Block

This block implements the user-programmable control registers that determine when to start a self test, at what clock frequency the scan test should be performed, which segment to be selected for the test, how many pattern intervals to be completed before stopping, and so forth.

The register block also captures various status information of the self test for the user.

11.8.8.7.4.4 STC Bypass / ATE Interface

This is a production test interface. This section bypasses the self-test FSM. The OPMISR signal interface is brought out directly to the module ports, and these are accessible to the ATE (tester) at the device level using the test controller module. The intent of the block is to provide capability for fault isolation for parts failing the logic self test run.

This block receives two sets of signals; one from the device test controller, and another similar set from the self-test FSM (test sequencer). The bypass indicator signal is used to select one of the two sets of signals to be routed to the OPMISR controller.

11.8.8.7.4.5 VBUSP Interface

The control and the status registers of the STC module can be accessed through the VBUSP interface. During application programming, configuration registers are programmed through the peripheral interface, to enable and run the self-test controller.

Copyright © 2025 Texas Instruments Incorporated

11.8.8.7.4.6 STC Flow

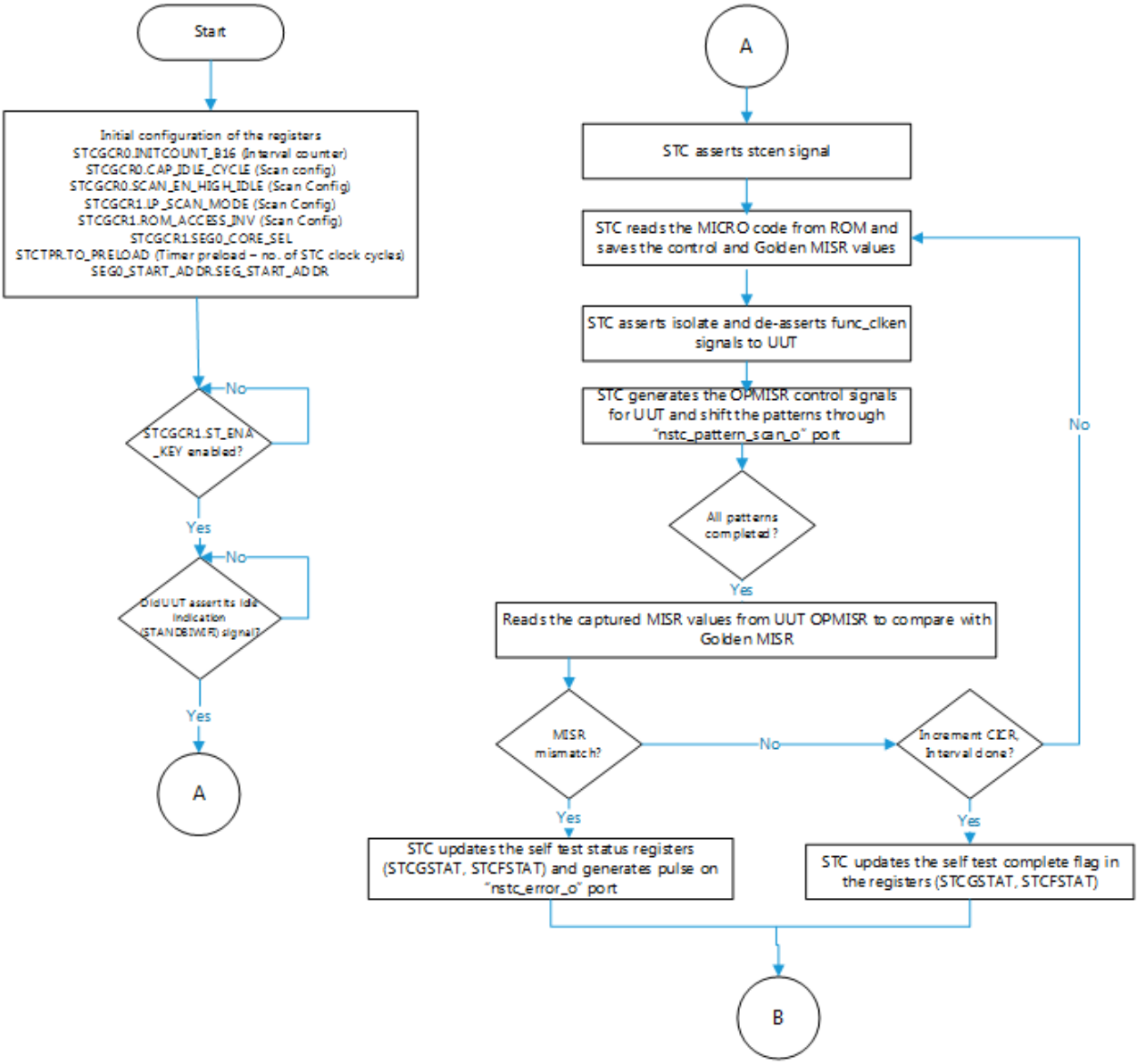

Figure 11-833. STC Flow (1 of 2)

Copyright © 2025 Texas Instruments Incorporated

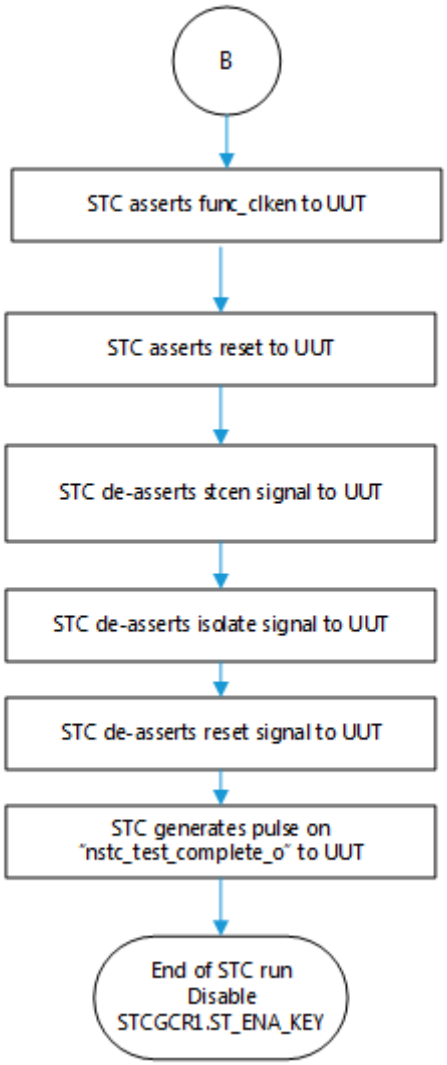

Figure 11-834. STC Flow (2 of 2)

11.8.8.7.4.7 ROM Organization

Table 11-2062. ROM Organization for 2 Intervals

COMMENTS	55:40	41:32	31:16	15:8	7:4	3	2	1	0
INTERVAL 0									
CFG for interval 0, when rom_access_inversion =0	Reserved	pattern_count[9:0]	Reserved	Reserved	Reserved	Seg_ID[1]	Seg_ID[0]	FT	TR_T

Copyright © 2025 Texas Instruments Incorporated

Table 11-2062. ROM Organization for 2 Intervals (continued)

COMMENTS	55:40	41:32	31:16	15:8	7:4	3	2	1	0
MISR for interval 0, when rom_access_inversion =0	MISR_GOLDEN[895:840]								
	MISR_GOLDEN[839:784]								
	MISR_GOLDEN[783:728]								
	MISR_GOLDEN[727:672]								
	MISR_GOLDEN[671:616]								
	MISR_GOLDEN[615:560]								
	MISR_GOLDEN[559:504]								
	MISR_GOLDEN[503:448]								
	MISR_GOLDEN[447:392]								
	MISR_GOLDEN[391:336]								
	MISR_GOLDEN[335:280]								
	MISR_GOLDEN[279:224]								
	MISR_GOLDEN[223:168]								
	MISR_GOLDEN[167:112]								
	MISR_GOLDEN[111:56]								
	MISR_GOLDEN[55:0]								
LP_MISR for interval 0, when rom_access_inversion =0	LP_MISR_GOLDEN[895:840]								
	LP_MISR_GOLDEN[839:784]								
	LP_MISR_GOLDEN[783:728]								
	LP_MISR_GOLDEN[727:672]								
	LP_MISR_GOLDEN[671:616]								
	LP_MISR_GOLDEN[615:560]								
	LP_MISR_GOLDEN[559:504]								
	LP_MISR_GOLDEN[503:448]								
	LP_MISR_GOLDEN[447:392]								
	LP_MISR_GOLDEN[391:336]								
	LP_MISR_GOLDEN[335:280]								
	LP_MISR_GOLDEN[279:224]								
	LP_MISR_GOLDEN[223:168]								
	LP_MISR_GOLDEN[167:112]								
	LP_MISR_GOLDEN[111:56]								
	LP_MISR_GOLDEN[55:0]								
Patterns for interval 0	P1_SD8[6:0]	P1_SD7[6:0]	P1_SD6[6:0]	….	….	…	P1_SD1[6:0]		
		…	…	…	…	…	…	P1_SD9[6:0]	
		…	…	…	…	…	…	…	…

Copyright © 2025 Texas Instruments Incorporated

Table 11-2062. ROM Organization for 2 Intervals (continued)

COMMENTS	55:40	41:32	31:16	15:8	7:4	3	2	1	0
LP_MISR for interval 0, when rom_access_inversion =1	LP_INV_MISR_GOLDEN[55:0]								
	LP_INV_MISR_GOLDEN[111:56]								
	LP_INV_MISR_GOLDEN[167:112]								
	LP_INV_MISR_GOLDEN[223:168]								
	LP_INV_MISR_GOLDEN[279:224]								
	LP_INV_MISR_GOLDEN[335:280]								
	LP_INV_MISR_GOLDEN[391:336]								
	LP_INV_MISR_GOLDEN[447:392]								
	LP_INV_MISR_GOLDEN[503:448]								
	LP_INV_MISR_GOLDEN[559:504]								
	LP_INV_MISR_GOLDEN[615:560]								
	LP_INV_MISR_GOLDEN[671:616]								
	LP_INV_MISR_GOLDEN[727:672]								
	LP_INV_MISR_GOLDEN[783:728]								
	LP_INV_MISR_GOLDEN[839:784]								
	LP_INV_MISR_GOLDEN[895:840]								
MISR for interval 0, when rom_access_inversion =1	INV_MISR_GOLDEN[55:0]								
	INV_MISR_GOLDEN[111:56]								
	INV_MISR_GOLDEN[167:112]								
	INV_MISR_GOLDEN[223:168]								
	INV_MISR_GOLDEN[279:224]								
	INV_MISR_GOLDEN[335:280]								
	INV_MISR_GOLDEN[391:336]								
	INV_MISR_GOLDEN[447:392]								
	INV_MISR_GOLDEN[503:448]								
	INV_MISR_GOLDEN[559:504]								
	INV_MISR_GOLDEN[615:560]								
	INV_MISR_GOLDEN[671:616]								
	INV_MISR_GOLDEN[727:672]								
	INV_MISR_GOLDEN[783:728]								
	INV_MISR_GOLDEN[839:784]								
	INV_MISR_GOLDEN[895:840]								
CFG for interval 0, when rom_access_inversion =1 (same as when_rom_access_inversion =0)	Reserved	pattern_count[9:0]	Reserved	Reserved	Reserved	Seg_ID[1]	Seg_ID[0]	FT	TR_T
INTERVAL 1									
CFG for interval 1, when rom_access_inversion =0	Reserved	pattern_count[9:0]	Reserved	Reserved	Reserved	Seg_ID[1]	Seg_ID[0]	FT	TR_T

Copyright © 2025 Texas Instruments Incorporated

Table 11-2062. ROM Organization for 2 Intervals (continued)

COMMENTS	55:40	41:32	31:16	15:8	7:4	3	2	1	0
MISR for interval 1, when rom_access_inversion =0	MISR_GOLDEN[895:840]								
	MISR_GOLDEN[839:784]								
	MISR_GOLDEN[783:728]								
	MISR_GOLDEN[727:672]								
	MISR_GOLDEN[671:616]								
	MISR_GOLDEN[615:560]								
	MISR_GOLDEN[559:504]								
	MISR_GOLDEN[503:448]								
	MISR_GOLDEN[447:392]								
	MISR_GOLDEN[391:336]								
	MISR_GOLDEN[335:280]								
	MISR_GOLDEN[279:224]								
	MISR_GOLDEN[223:168]								
	MISR_GOLDEN[167:112]								
	MISR_GOLDEN[111:56]								
	MISR_GOLDEN[55:0]								
LP_MISR for interval 1, when rom_access_inversion =0	LP_MISR_GOLDEN[895:840]								
	LP_MISR_GOLDEN[839:784]								
	LP_MISR_GOLDEN[783:728]								
	LP_MISR_GOLDEN[727:672]								
	LP_MISR_GOLDEN[671:616]								
	LP_MISR_GOLDEN[615:560]								
	LP_MISR_GOLDEN[559:504]								
	LP_MISR_GOLDEN[503:448]								
	LP_MISR_GOLDEN[447:392]								
	LP_MISR_GOLDEN[391:336]								
	LP_MISR_GOLDEN[335:280]								
	LP_MISR_GOLDEN[279:224]								
	LP_MISR_GOLDEN[223:168]								
	LP_MISR_GOLDEN[167:112]								
	LP_MISR_GOLDEN[111:56]								
	LP_MISR_GOLDEN[55:0]								
Patterns for interval 1	P1_SD8[6:0]	P1_SD7[6:0]	P1_SD6[6:0]	….	….	…	P1_SD1[6:0]		
		…	…	…	…	…	…	P1_SD9[6:0]	
		…	…	…	…	…	…	…	…

Copyright © 2025 Texas Instruments Incorporated

Table 11-2062. ROM Organization for 2 Intervals (continued)

COMMENTS	55:40	41:32	31:16	15:8	7:4	3	2	1	0
LP_MISR for interval 1, when rom_access_inversion =1	LP_INV_MISR_GOLDEN[55:0]								
	LP_INV_MISR_GOLDEN[111:56]								
	LP_INV_MISR_GOLDEN[167:112]								
	LP_INV_MISR_GOLDEN[223:168]								
	LP_INV_MISR_GOLDEN[279:224]								
	LP_INV_MISR_GOLDEN[335:280]								
	LP_INV_MISR_GOLDEN[391:336]								
	LP_INV_MISR_GOLDEN[447:392]								
	LP_INV_MISR_GOLDEN[503:448]								
	LP_INV_MISR_GOLDEN[559:504]								
	LP_INV_MISR_GOLDEN[615:560]								
	LP_INV_MISR_GOLDEN[671:616]								
	LP_INV_MISR_GOLDEN[727:672]								
	LP_INV_MISR_GOLDEN[783:728]								
	LP_INV_MISR_GOLDEN[839:784]								
	LP_INV_MISR_GOLDEN[895:840]								
MISR for interval 1, when rom_access_inversion =1	INV_MISR_GOLDEN[55:0]								
	INV_MISR_GOLDEN[111:56]								
	INV_MISR_GOLDEN[167:112]								
	INV_MISR_GOLDEN[223:168]								
	INV_MISR_GOLDEN[279:224]								
	INV_MISR_GOLDEN[335:280]								
	INV_MISR_GOLDEN[391:336]								
	INV_MISR_GOLDEN[447:392]								
	INV_MISR_GOLDEN[503:448]								
	INV_MISR_GOLDEN[559:504]								
	INV_MISR_GOLDEN[615:560]								
	INV_MISR_GOLDEN[671:616]								
	INV_MISR_GOLDEN[727:672]								
	INV_MISR_GOLDEN[783:728]								
	INV_MISR_GOLDEN[839:784]								
	INV_MISR_GOLDEN[895:840]								
CFG for interval 1, when rom_access_inversion =1 (same as when_rom_access_inversion =0)	Reserved	pattern_count[9:0]	Reserved	Reserved	Reserved	Seg_ID[1]	Seg_ID[0]	FT	TR_T

The ROM contains the data to be processed by STC for the self-test run. This includes the control fields such as Segment ID, Pattern Count, and Golden MISR value for the STC, and the pattern scan data for the OPMISR controller.

The ROM space is divided into chunks, with each chunk containing the data corresponding to one OPMISR interval. The size required for an interval varies depending on the number patterns packed into the interval and the length of internal scan chains required.

Because each interval requires 64 rows of ROM for storing control and Golden MISR values, minimizing the number of intervals by packing more patterns into each interval provides the best ROM size. This works best if

Copyright © 2025 Texas Instruments Incorporated

the self-test must be run only as a part of the boot-up sequence. However, if the self-test is performed during application IDLE time, the number of patterns that can be packed into each interval will be dictated by the IDLE time available for the self-test, because an interval is the smallest granularity of a self-test run.

Details of the ROM image micro-code fields are given in the following sections.

11.8.8.7.4.7.1 TR_T: Transition Delay Methodology Type

This specifies the transition delay methodology for the current transition delay interval.

0	Launch-on-System-Clock

11.8.8.7.4.7.2 FT: Fault Model for the BIST Run

This specifies the fault model for the current interval of the test.

0	Stuck-at

11.8.8.7.4.7.3 SEG_ID[1:0]

This indicates which logical segment is selected for the associated interval during the self-test run.

SEG_SEL[1:0]	Segment Under Test
00	Segment 0
01	Segment 1
10	Segment 2
11	Segment 3

11.8.8.7.4.7.4 Pattern Count (patt_count[9:0])

This specifies the number of scan data patterns within a self-test interval. The pattern counts can vary from a minimum of 2 to a maximum of 1024.

patt_count[9:0]	Patterns per Interval
00_0000_0000	Not a valid interval [defaults to 2 patterns per interval]
00_0000_0001	2 patterns per interval
00_0000_0010	3 patterns per interval
...	...
11_1111_1110	1023 patterns per interval
11_1111_1111	1024 patterns per interval

11.8.8.7.4.7.5 MISR_GOLDEN[895:0]: Golden Signature Data Bits

This part of ROM contains the golden signature data of the current interval. This value is used to compare with the actual MISR value, when ST_GCR1.ROM_ACCESS_INV=0 and ST_GCR1.LP_SCAN_MODE=0, to generate the pass/fail information of the interval.

Copyright © 2025 Texas Instruments Incorporated

11.8.8.7.4.7.6 LP_MISR_GOLDEN[895:0]: Low Power Mode Golden Signature Data Bits

This part of ROM contains the LP golden signature data of the current interval. This value is used to compare with the actual MISR value, when STCGCR1.ROM_ACCESS_INV=0 and STCGCR1.LP_SCAN_MODE=1, to generate the pass/fail information of the interval.

11.8.8.7.4.7.7 INV_MISR_GOLDEN[895:0]: Inverse Mode Golden Signature Data Bits

This part of ROM contains the inverse mode golden signature data of the current interval. This value is used to compare with the actual MISR value, when STCGCR1.ROM_ACCESS_INV=1 and STCGCR1.LP_SCAN_MODE=0, to generate the pass/fail information of the interval.

11.8.8.7.4.7.8 LP_INV_MISR_GOLDEN[895:0]: Low Power Inverse Mode Golden Signature Data Bits

This part of ROM contains the low-power inverse mode golden signature data of the current interval. This value is used to compare with the actual MISR value, when STCGCR1.ROM_ACCESS_INV=1 and STCGCR1.LP_SCAN_MODE=1, to generate the pass/fail information of the interval.

11.8.8.7.4.7.9 Pn_SDm[7:0] (n - no. of patterns, m - scan chain length): OP-MISR Scan Data

This part of the ROM contains the scan data corresponding to each pattern. Each interval can have n number of scan patterns, as defined in the patt_count field. The number of 7bits of scan data in a pattern is equal to the length of the scan chain formed inside the UUT.

Copyright © 2025 Texas Instruments Incorporated

11.8.8.7.5 STC Registers

Table 11-2063 lists the memory-mapped registers for the STC registers. All register offset addresses not listed in Table 11-2063 should be considered as reserved locations and the register contents should not be modified.

Table 11-2063. STC Registers

Offset	Acronym	Register Name	Section
0h	STCGCR0	Self test Global control Reg0	Go
4h	STCGCR1	Self test Global control Reg1	Go
8h	STCTPR	Time out counter preload register	Go
Ch	STC_CADDR	Current Address register for CORE1	Go
10h	STCCICR	Current Interval count register	Go
14h	STCGSTAT	Global Status Register	Go
18h	STCFSTAT	Fail Status Register	Go
1Ch	STCSCSCR	Signature compare Self Check Register	Go
20h	STC_CADDR2	Current Address register for CORE2	Go
24h	STC_CLKDIV	Clock Divider Register	Go
28h	STC_SEGPLR	Segment 1st interval Preload Register	Go
2Ch	SEG0_START_ADDR	ROM Start address for Segment0	Go
30h	SEG1_START_ADDR	ROM Start address for Segment1	Go
34h	SEG2_START_ADDR	ROM Start address for Segment2	Go
38h	SEG3_START_ADDR	ROM Start address for Segment3	Go
3Ch	CORE1_CURMISR_0	Holds the MISR signature for CORE1	Go
40h	CORE1_CURMISR_1	Holds the MISR signature for CORE1	Go
44h	CORE1_CURMISR_2	Holds the MISR signature for CORE1	Go
48h	CORE1_CURMISR_3	Holds the MISR signature for CORE1	Go
4Ch	CORE1_CURMISR_4	Holds the MISR signature for CORE1	Go
50h	CORE1_CURMISR_5	Holds the MISR signature for CORE1	Go
54h	CORE1_CURMISR_6	Holds the MISR signature for CORE1	Go
58h	CORE1_CURMISR_7	Holds the MISR signature for CORE1	Go
5Ch	CORE1_CURMISR_8	Holds the MISR signature for CORE1	Go
60h	CORE1_CURMISR_9	Holds the MISR signature for CORE1	Go
64h	CORE1_CURMISR_10	Holds the MISR signature for CORE1	Go
68h	CORE1_CURMISR_11	Holds the MISR signature for CORE1	Go
6Ch	CORE1_CURMISR_12	Holds the MISR signature for CORE1	Go
70h	CORE1_CURMISR_13	Holds the MISR signature for CORE1	Go
74h	CORE1_CURMISR_14	Holds the MISR signature for CORE1	Go
78h	CORE1_CURMISR_15	Holds the MISR signature for CORE1	Go
7Ch	CORE1_CURMISR_16	Holds the MISR signature for CORE1	Go
80h	CORE1_CURMISR_17	Holds the MISR signature for CORE1	Go
84h	CORE1_CURMISR_18	Holds the MISR signature for CORE1	Go
88h	CORE1_CURMISR_19	Holds the MISR signature for CORE1	Go
8Ch	CORE1_CURMISR_20	Holds the MISR signature for CORE1	Go
90h	CORE1_CURMISR_21	Holds the MISR signature for CORE1	Go
94h	CORE1_CURMISR_22	Holds the MISR signature for CORE1	Go
98h	CORE1_CURMISR_23	Holds the MISR signature for CORE1	Go
9Ch	CORE1_CURMISR_24	Holds the MISR signature for CORE1	Go
A0h	CORE1_CURMISR_25	Holds the MISR signature for CORE1	Go

Copyright © 2025 Texas Instruments Incorporated

Table 11-2063. STC Registers (continued)

Offset	Acronym	Register Name	Section
A4h	CORE1_CURMISR_26	Holds the MISR signature for CORE1	Go
A8h	CORE1_CURMISR_27	Holds the MISR signature for CORE1	Go
ACh	CORE2_CURMISR_0	Holds the MISR signature for CORE2	Go
B0h	CORE2_CURMISR_1	Holds the MISR signature for CORE2	Go
B4h	CORE2_CURMISR_2	Holds the MISR signature for CORE2	Go
B8h	CORE2_CURMISR_3	Holds the MISR signature for CORE2	Go
BCh	CORE2_CURMISR_4	Holds the MISR signature for CORE2	Go
C0h	CORE2_CURMISR_5	Holds the MISR signature for CORE2	Go
C4h	CORE2_CURMISR_6	Holds the MISR signature for CORE2	Go
C8h	CORE2_CURMISR_7	Holds the MISR signature for CORE2	Go
CCh	CORE2_CURMISR_8	Holds the MISR signature for CORE2	Go
D0h	CORE2_CURMISR_9	Holds the MISR signature for CORE2	Go
D4h	CORE2_CURMISR_10	Holds the MISR signature for CORE2	Go
D8h	CORE2_CURMISR_11	Holds the MISR signature for CORE2	Go
DCh	CORE2_CURMISR_12	Holds the MISR signature for CORE2	Go
E0h	CORE2_CURMISR_13	Holds the MISR signature for CORE2	Go
E4h	CORE2_CURMISR_14	Holds the MISR signature for CORE2	Go
E8h	CORE2_CURMISR_15	Holds the MISR signature for CORE2	Go
ECh	CORE2_CURMISR_16	Holds the MISR signature for CORE2	Go
F0h	CORE2_CURMISR_17	Holds the MISR signature for CORE2	Go
F4h	CORE2_CURMISR_18	Holds the MISR signature for CORE2	Go
F8h	CORE2_CURMISR_19	Holds the MISR signature for CORE2	Go
FCh	CORE2_CURMISR_20	Holds the MISR signature for CORE2	Go
100h	CORE2_CURMISR_21	Holds the MISR signature for CORE2	Go
104h	CORE2_CURMISR_22	Holds the MISR signature for CORE2	Go
108h	CORE2_CURMISR_23	Holds the MISR signature for CORE2	Go
10Ch	CORE2_CURMISR_24	Holds the MISR signature for CORE2	Go
110h	CORE2_CURMISR_25	Holds the MISR signature for CORE2	Go
114h	CORE2_CURMISR_26	Holds the MISR signature for CORE2	Go
118h	CORE2_CURMISR_27	Holds the MISR signature for CORE2	Go

Complex bit access types are encoded to fit into small table cells. Table 11-2064 shows the codes that are used for access types in this section.

Table 11-2064. STC Access Type Codes

Access Type	Code	Description
Read Type		
R	R	Read
Write Type		
W	W	Write
Reset or Default Value		
-n		Value after reset or the default value

Copyright © 2025 Texas Instruments Incorporated

11.8.8.7.5.1 STCGCR0 Register (Offset = 0h) [Reset = 00000000h]

STCGCR0 is shown in Table 11-2065.

Return to the Summary Table.

Self test Global control Reg0. *NOT BYTE ACCESSIBLE

Table 11-2065. STCGCR0 Register Field Descriptions

Bit	Field	Type	Reset	Description
31-16	INTCOUNT_B16	R/W	0h	Number of intervals of the self test run (RWP - Read, Priviledge Mode Write only) Count of intervals that need to be covered for a specific selftest run. The selftest controller sends out “complete” indication once it runs all of the intervals programmed in this field. INTCOUNT_B 16= 0 is an invalid configuration for a selftest.
15-11	NU0	R	0h	Reserved bits
10-8	CAP_IDLE_CYCLE	R/W	0h	Idle cycles before and after capture clock (RWP - Read, Priviledge Mode Write only) Idle Cycles before and after capture clock. This value is used to insert that many idle cycles in the Capture phase. Programmable idle cycles allow implementation flexibility on SCAN_EN signal at chip level based on the size of the UUT and timing requirements.
7-5	SCANEN_HIGH_CAP_IDLE_CYCLE	R/W	0h	Idle cycles before and after capture clock (RWP - Read, Priviledge Mode Write only). *NOT BYTE ACCESSIBLE Idle Cycles between scan_en going high to func_clk_en generation and scan_en going high to misr_log_en generation. This value is used to insert that many idle cycles in the shift clock (scan_en going high to func_clk_en generation) and misr_log_clk (scan_en going high to misr_log_en generation) generation. Programmable idle cycles allow implementation flexibility on SCAN_EN signal at chip level based on the size of the UUT and timing requirements.
4-2	NU1	R	0h	Reserved bits
1-0	RS_CNT_B1	R/W	0h	Restart/Continue or preload (RWP - Read, Priviledge Mode Write only) This bit specifies the selftest controller whether to continue the run from next interval onwards, restart from ROM address 0 or preload from a prescribed interval. This bit gets reset after the completion of selftest run. 00 = Continue NSTC run from previous interval 01 = Restart NSTC run from ROM address 0 1X = Start from segment number specified in STC_SEGPLR register

Copyright © 2025 Texas Instruments Incorporated

11.8.8.7.5.2 STCGCR1 Register (Offset = 4h) [Reset = 00000000h]

STCGCR1 is shown in Table 11-2066.

Return to the Summary Table.

Self test Global control Reg1

Table 11-2066. STCGCR1 Register Field Descriptions

Bit	Field	Type	Reset	Description
31-12	NU2	R	0h	Reserved bits
11-8	SEG0_CORE_SEL	R/W	0h	Selects the Segment 0 CORE for self test (RWP - Read, Priviledge Mode Write only) Select the Segment 0 CORE for Self -Test 0001 = Select CORE for selftest Other = CORE not selected.
7	NU3	R	0h	Reserved bits
6	CODEC_SPREAD_MODE	R/W	0h	Codec Spread Mode control signal (RWP - Read, Priviledge Mode Write only) This bit is used to configure the codec in spread / X-OR mode. 1 = Spread mode 0 = XOR mode
5	LP_SCAN_MODE	R/W	0h	LP scan mode (RWP - Read, Priviledge Mode Write only) This bit is used to decide the scan configuration: 1 = Operates in Low Power Scan Mode. 0 = Operates in Normal Scan Mode.
4	ROM_ACCESS_INV	R/W	0h	Rom access inversion mode (RWP - Read, Priviledge Mode Write only) - NOT SUPPORTED
3-0	ST_ENA_B4	R/W	0h	Self test enable key (RWP - Read, Priviledge Mode Write only) 1010 = Self test run enabled All values other than 1010 = Self test run disabled

Copyright © 2025 Texas Instruments Incorporated

11.8.8.7.5.3 STCTPR Register (Offset = 8h) [Reset = 00000000h]

STCTPR is shown in Table 11-2067.

Return to the Summary Table.

Time out counter preload register

Table 11-2067. STCTPR Register Field Descriptions

Bit	Field	Type	Reset	Description
31-0	TO_PRELOAD	R/W	0h	Self test time out preload (RWP - Read, Priviledge Mode Write only) This register contains the total number of STC clock cycles it will take before a self-test timeout error will be triggered after the initiation of the self-test run. This is a fail safe feature to avoid system hang-up situation on account of any run away self test issues. This register should be loaded with a meaningful count value for this feature to be effective. This register value (preload count value) gets loaded into the self test timeout down counter whenever a self test run is initiated (ST_ENA is enabled). and gets disabled on completion of a self test run.

Copyright © 2025 Texas Instruments Incorporated

11.8.8.7.5.4 STC_CADDR Register (Offset = Ch) [Reset = 00000000h]

STC_CADDR is shown in Table 11-2068.

Return to the Summary Table.

Current Address register for CORE1

Table 11-2068. STC_CADDR Register Field Descriptions

Bit	Field	Type	Reset	Description
31-0	ADDR	R	0h	Current ROM Address for CORE1 This register reflects the current ROM address (for micro code load) accessed during selftest for CORE1 in of case segment0 and all the remaining segmentsn where n = 1 to 3).

Copyright © 2025 Texas Instruments Incorporated

11.8.8.7.5.5 STCCICR Register (Offset = 10h) [Reset = 00000000h]

STCCICR is shown in Table 11-2069.

Return to the Summary Table.

Current Interval count register

Table 11-2069. STCCICR Register Field Descriptions

Bit	Field	Type	Reset	Description
31-16	CORE2_ICOUNT	R	0h	Specifies the last interval number for CORE2 This specifies the Last executed Interval number for CORE2 of Segment0 if self test is being executed for secondary core as well. This field is applicable only for Segment 0.
15-0	CORE1_ICOUNT	R	0h	Specifies the last interval number for CORE1 This specifies the Last executed Interval number of a self-test run.

Copyright © 2025 Texas Instruments Incorporated

11.8.8.7.5.6 STCGSTAT Register (Offset = 14h) [Reset = 00000000h]

STCGSTAT is shown in Table 11-2070.

Return to the Summary Table.

Global Status Register

Table 11-2070. STCGSTAT Register Field Descriptions

Bit	Field	Type	Reset	Description
31-12	NU4	R	0h	Reserved bits
11-8	ST_ACTIVE	R	0h	Tells whether self test is currently active or not. 1010 = Self test is active Others = SelfTest is not active Once the self-test completes and ST_ENA_B 4 key is cleared, this field will reflect the inactive value.
7-2	NU5	R	0h	Reserved bits
1	TEST_FAIL	R	0h	Test_fail flag (RCP - Read, Clear on Writing in Priviledge Mode) 0 = Self test run has not failed 1 = SelfTest run has failed. Write Clear.
0	TEST_DONE	R	0h	Test_done_flag (RCP - Read, Clear on Writing in Priviledge Mode) 0 = Not completed 1 = SelfTest run Completed

Copyright © 2025 Texas Instruments Incorporated

11.8.8.7.5.7 STCFSTAT Register (Offset = 18h) [Reset = 00000000h]

STCFSTAT is shown in Table 11-2071.

Return to the Summary Table.

Fail Status Register

Table 11-2071. STCFSTAT Register Field Descriptions

Bit	Field	Type	Reset	Description
31-5	NU6	R	0h	Reserved bits
4-3	FSEG_ID	R	0h	Failed Segment ID (RCP - Read, Clear on Writing in Priviledge Mode) This field captures the Segment number for which any of the failures like TO_ER_B 1, CPU 1_FAIL_B 1 and CPU 2_FAIL_B 1 occur. 00 = Failure on Segment 0 01 = Failure on Segment 1 10 = Failure on Segment 2 11 = Failure on Segment 3
2	TO_ER_B1	R	0h	Tells whether self test failed because of time out error (RCP - Read, Clear on Writing in Priviledge Mode) 0 = No time out error occurred 1 = SelfTest run failed due to a timeout error
1	CPU2_FAIL_B1	R	0h	Tells whether MISR mismatch happenned in CORE 2 when in Segment 0 mode (RCP - Read, Clear on Writing in Priviledge Mode) 0 = No MISR mismatch for CORE 2 1 = Self test run failed due to MISR mismatch for CORE 2
0	CPU1_FAIL_B1	R	0h	Tells whether MISR mismatch happenned in CORE 1 (RCP - Read, Clear on Writing in Priviledge Mode) Applicable to all segments. 0 = No MISR mismatch for CORE 1 1 = Self test run failed due to MISR mismatch for CORE 1

Copyright © 2025 Texas Instruments Incorporated

11.8.8.7.5.8 STCSCSCR Register (Offset = 1Ch) [Reset = 00000000h]

STCSCSCR is shown in Table 11-2072.

Return to the Summary Table.

Signature compare Self Check Register

Table 11-2072. STCSCSCR Register Field Descriptions

Bit	Field	Type	Reset	Description
31-5	NU7	R	0h	Reserved bits
4	FAULT_INS_B1	R/W	0h	Fault Insertion bit (RWP - Read, Priviledge Mode Write only) 0 = No fault insertion. 1 = Inserts fault in the logic unedr test which will make signature compare fail. This feature is used as diagnostic check of the STC IP.
3-0	SELF_CHECK_KEY_B4	R/W	0h	Signature compare logic self check key enable/disable (RWP - Read, Priviledge Mode Write only) 1010 = Signature compare logic Self Check is enabled All values other than 1010 = Signature compare logic Self Check is disabled

Copyright © 2025 Texas Instruments Incorporated

11.8.8.7.5.9 STC_CADDR2 Register (Offset = 20h) [Reset = 00000000h]

STC_CADDR2 is shown in Table 11-2073.

Return to the Summary Table.

Current Address register for CORE2

Table 11-2073. STC_CADDR2 Register Field Descriptions

Bit	Field	Type	Reset	Description
31-0	ADDR	R	0h	Current ROM Address for CORE2 This register reflects the current ROM address(for micro code load) accessed during selftest for CORE2 in of case segment0.

Copyright © 2025 Texas Instruments Incorporated

11.8.8.7.5.10 STC_CLKDIV Register (Offset = 24h) [Reset = 00000000h]

STC_CLKDIV is shown in Table 11-2074.

Return to the Summary Table.

Clock Divider Register

Table 11-2074. STC_CLKDIV Register Field Descriptions

Bit	Field	Type	Reset	Description
31-27	NU8	R	0h	Reserved bits
26-24	CLKDIV0	R/W	0h	Clock division for Seg0 (RWP - Read, Priviledge Mode Write only) *NOT SUPPORTED X = Division ratio is X+1 for Segment 0
23-19	NU9	R	0h	Reserved bits
18-16	CLKDIV1	R/W	0h	Clock division for Seg1 (RWP - Read, Priviledge Mode Write only) *NOT SUPPORTED X = Division ratio is X+1 for Segment 1
15-11	NU10	R	0h	Reserved bits
10-8	CLKDIV2	R/W	0h	Clock division for Seg2 (RWP - Read, Priviledge Mode Write only) *NOT SUPPORTED X = Division ratio is X+1 for Segment 2
7-3	NU11	R	0h	Reserved bits
2-0	CLKDIV3	R/W	0h	Clock division for Seg3 (RWP - Read, Priviledge Mode Write only) *NOT SUPPORTED X = Division ratio is X+1 for Segment 3

Copyright © 2025 Texas Instruments Incorporated

11.8.8.7.5.11 STC_SEGPLR Register (Offset = 28h) [Reset = 00000000h]

STC_SEGPLR is shown in Table 11-2075.

Return to the Summary Table.

Segment 1st interval Preload Register

Table 11-2075. STC_SEGPLR Register Field Descriptions

Bit	Field	Type	Reset	Description
31-2	NU12	R	0h	Reserved bits
1-0	SEGID_PLOAD	R/W	0h	Segment number for which preload is to be started (RWP - Read, Priviledge Mode Write only) This specifies the segment for which the address of its First interval will be pre-loaded into the NSTC ROM address counter. The 1st address of each segment are defined in SEGx_START_ADDR register.The address of the 1st interval of the selected segment is loaded into the NSTC ROM address counter when the RS_CNT_B 1 bits of STC_GCR 0 are set to 1X 00 = Preload the address of the 1st interval of segment 0. 01 = Preload the address of the 1st interval of segment 1. 10 = Preload the address of the 1st interval of segment 2. 11 = Preload the address of the 1st interval of segment 3.

Copyright © 2025 Texas Instruments Incorporated

11.8.8.7.5.12 SEG0_START_ADDR Register (Offset = 2Ch) [Reset = 00000000h]

SEG0_START_ADDR is shown in Table 11-2076.

Return to the Summary Table.

ROM Start address for Segment0

Table 11-2076. SEG0_START_ADDR Register Field Descriptions

Bit	Field	Type	Reset	Description
31-20	NU13	R	0h	Reserved bits
19-0	SEG_START_ADDR	R/W	0h	Segment 0 Start Address (RWP - Read, Priviledge Mode Write only) This register holds the ROM address for the start of first interval of the segment. When STC_GCR0.RS_CNT_B1 field is set to (1x) “PRELOAD” option, this register is used to determine the ROM start address for the Segment selected in ST_SEGPLR register. Valid number of bits depends on RTL paramerter ADDR

Copyright © 2025 Texas Instruments Incorporated

11.8.8.7.5.13 SEG1_START_ADDR Register (Offset = 30h) [Reset = 00000000h]

SEG1_START_ADDR is shown in Table 11-2077.

Return to the Summary Table.

ROM Start address for Segment1

Table 11-2077. SEG1_START_ADDR Register Field Descriptions

Bit	Field	Type	Reset	Description
31-20	NU14	R	0h	Reserved bits
19-0	SEG_START_ADDR	R/W	0h	Segment 1 Start Address (RWP - Read, Priviledge Mode Write only) This register holds the ROM address for the start of first interval of the segment. When STC_GCR0.RS_CNT_B1 field is set to (1x) “PRELOAD” option, this register is used to determine the ROM start address for the Segment selected in ST_SEGPLR register. Valid number of bits depends on RTL paramerter ADDR. This register is present only when RTL parameter NUM_SEG = 1.

Copyright © 2025 Texas Instruments Incorporated

11.8.8.7.5.14 SEG2_START_ADDR Register (Offset = 34h) [Reset = 00000000h]

SEG2_START_ADDR is shown in Table 11-2078.

Return to the Summary Table.

ROM Start address for Segment2

Table 11-2078. SEG2_START_ADDR Register Field Descriptions

Bit	Field	Type	Reset	Description
31-20	NU15	R	0h	Reserved bits
19-0	SEG_START_ADDR	R/W	0h	Segment 2 Start Address (RWP - Read, Priviledge Mode Write only) This register holds the ROM address for the start of first interval of the segment. When STC_GCR0.RS_CNT_B1 field is set to (1x) “PRELOAD” option, this register is used to determine the ROM start address for the Segment selected in ST_SEGPLR register. Valid number of bits depends on RTL paramerter ADDR. This register is present only when RTL parameter NUM_SEG = 2.

Copyright © 2025 Texas Instruments Incorporated

11.8.8.7.5.15 SEG3_START_ADDR Register (Offset = 38h) [Reset = 00000000h]

SEG3_START_ADDR is shown in Table 11-2079.

Return to the Summary Table.

ROM Start address for Segment3

Table 11-2079. SEG3_START_ADDR Register Field Descriptions

Bit	Field	Type	Reset	Description
31-20	NU16	R	0h	Reserved bits
19-0	SEG_START_ADDR	R/W	0h	Segment 3 Start Address (RWP - Read, Priviledge Mode Write only) This register holds the ROM address for the start of first interval of the segment. When STC_GCR0.RS_CNT_B1 field is set to (1x) “PRELOAD” option, this register is used to determine the ROM start address for the Segment selected in ST_SEGPLR register. Valid number of bits depends on RTL paramerter ADDR. This register is present only when RTL parameter NUM_SEG = 3.

Copyright © 2025 Texas Instruments Incorporated

11.8.8.7.5.16 CORE1_CURMISR_0 Register (Offset = 3Ch) [Reset = 00000000h]

CORE1_CURMISR_0 is shown in Table 11-2080.

Return to the Summary Table.

Holds the MISR signature for CORE1

Table 11-2080. CORE1_CURMISR_0 Register Field Descriptions

Bit	Field	Type	Reset	Description
31-0	C1MISR0	R	0h	MISR Signature for CORE1 This register contains the MISR data of the current interval for CORE1 in the case of segment0 and the remaining Segments 1 to 3. This value will be compared with the GOLDEN MISR value copied from ROM. This register gets reset to its default value with Power on or system reset assertion. The MISR values should be read only after the Self Test is completed.

Copyright © 2025 Texas Instruments Incorporated

11.8.8.7.5.17 CORE1_CURMISR_1 Register (Offset = 40h) [Reset = 00000000h]

CORE1_CURMISR_1 is shown in Table 11-2081.

Return to the Summary Table.

Holds the MISR signature for CORE1

Table 11-2081. CORE1_CURMISR_1 Register Field Descriptions

Bit	Field	Type	Reset	Description
31-0	C1MISR1	R	0h	MISR Signature for CORE1 This register contains the MISR data of the current interval for CORE1 in the case of segment0 and the remaining Segments 1 to 3. This value will be compared with the GOLDEN MISR value copied from ROM. This register gets reset to its default value with Power on or system reset assertion. The MISR values should be read only after the Self Test is completed.

Copyright © 2025 Texas Instruments Incorporated

11.8.8.7.5.18 CORE1_CURMISR_2 Register (Offset = 44h) [Reset = 00000000h]

CORE1_CURMISR_2 is shown in Table 11-2082.

Return to the Summary Table.

Holds the MISR signature for CORE1

Table 11-2082. CORE1_CURMISR_2 Register Field Descriptions

Bit	Field	Type	Reset	Description
31-0	C1MISR2	R	0h	MISR Signature for CORE1 This register contains the MISR data of the current interval for CORE1 in the case of segment0 and the remaining Segments 1 to 3. This value will be compared with the GOLDEN MISR value copied from ROM. This register gets reset to its default value with Power on or system reset assertion. The MISR values should be read only after the Self Test is completed.

Copyright © 2025 Texas Instruments Incorporated

11.8.8.7.5.19 CORE1_CURMISR_3 Register (Offset = 48h) [Reset = 00000000h]

CORE1_CURMISR_3 is shown in Table 11-2083.

Return to the Summary Table.

Holds the MISR signature for CORE1

Table 11-2083. CORE1_CURMISR_3 Register Field Descriptions

Bit	Field	Type	Reset	Description
31-0	C1MISR3	R	0h	MISR Signature for CORE1 This register contains the MISR data of the current interval for CORE1 in the case of segment0 and the remaining Segments 1 to 3. This value will be compared with the GOLDEN MISR value copied from ROM. This register gets reset to its default value with Power on or system reset assertion. The MISR values should be read only after the Self Test is completed.

Copyright © 2025 Texas Instruments Incorporated

11.8.8.7.5.20 CORE1_CURMISR_4 Register (Offset = 4Ch) [Reset = 00000000h]

CORE1_CURMISR_4 is shown in Table 11-2084.

Return to the Summary Table.

Holds the MISR signature for CORE1

Table 11-2084. CORE1_CURMISR_4 Register Field Descriptions

Bit	Field	Type	Reset	Description
31-0	C1MISR4	R	0h	MISR Signature for CORE1 This register contains the MISR data of the current interval for CORE1 in the case of segment0 and the remaining Segments 1 to 3. This value will be compared with the GOLDEN MISR value copied from ROM. This register gets reset to its default value with Power on or system reset assertion. The MISR values should be read only after the Self Test is completed.

Copyright © 2025 Texas Instruments Incorporated

11.8.8.7.5.21 CORE1_CURMISR_5 Register (Offset = 50h) [Reset = 00000000h]

CORE1_CURMISR_5 is shown in Table 11-2085.

Return to the Summary Table.

Holds the MISR signature for CORE1

Table 11-2085. CORE1_CURMISR_5 Register Field Descriptions

Bit	Field	Type	Reset	Description
31-0	C1MISR5	R	0h	MISR Signature for CORE1 This register contains the MISR data of the current interval for CORE1 in the case of segment0 and the remaining Segments 1 to 3. This value will be compared with the GOLDEN MISR value copied from ROM. This register gets reset to its default value with Power on or system reset assertion. The MISR values should be read only after the Self Test is completed.

Copyright © 2025 Texas Instruments Incorporated

11.8.8.7.5.22 CORE1_CURMISR_6 Register (Offset = 54h) [Reset = 00000000h]

CORE1_CURMISR_6 is shown in Table 11-2086.

Return to the Summary Table.

Holds the MISR signature for CORE1

Table 11-2086. CORE1_CURMISR_6 Register Field Descriptions

Bit	Field	Type	Reset	Description
31-0	C1MISR6	R	0h	MISR Signature for CORE1 This register contains the MISR data of the current interval for CORE1 in the case of segment0 and the remaining Segments 1 to 3. This value will be compared with the GOLDEN MISR value copied from ROM. This register gets reset to its default value with Power on or system reset assertion. The MISR values should be read only after the Self Test is completed.

Copyright © 2025 Texas Instruments Incorporated

11.8.8.7.5.23 CORE1_CURMISR_7 Register (Offset = 58h) [Reset = 00000000h]

CORE1_CURMISR_7 is shown in Table 11-2087.

Return to the Summary Table.

Holds the MISR signature for CORE1

Table 11-2087. CORE1_CURMISR_7 Register Field Descriptions

Bit	Field	Type	Reset	Description
31-0	C1MISR7	R	0h	MISR Signature for CORE1 This register contains the MISR data of the current interval for CORE1 in the case of segment0 and the remaining Segments 1 to 3. This value will be compared with the GOLDEN MISR value copied from ROM. This register gets reset to its default value with Power on or system reset assertion. The MISR values should be read only after the Self Test is completed.

Copyright © 2025 Texas Instruments Incorporated

11.8.8.7.5.24 CORE1_CURMISR_8 Register (Offset = 5Ch) [Reset = 00000000h]

CORE1_CURMISR_8 is shown in Table 11-2088.

Return to the Summary Table.

Holds the MISR signature for CORE1

Table 11-2088. CORE1_CURMISR_8 Register Field Descriptions

Bit	Field	Type	Reset	Description
31-0	C1MISR8	R	0h	MISR Signature for CORE1 This register contains the MISR data of the current interval for CORE1 in the case of segment0 and the remaining Segments 1 to 3. This value will be compared with the GOLDEN MISR value copied from ROM. This register gets reset to its default value with Power on or system reset assertion. The MISR values should be read only after the Self Test is completed.

Copyright © 2025 Texas Instruments Incorporated

11.8.8.7.5.25 CORE1_CURMISR_9 Register (Offset = 60h) [Reset = 00000000h]

CORE1_CURMISR_9 is shown in Table 11-2089.

Return to the Summary Table.

Holds the MISR signature for CORE1

Table 11-2089. CORE1_CURMISR_9 Register Field Descriptions

Bit	Field	Type	Reset	Description
31-0	C1MISR9	R	0h	MISR Signature for CORE1 This register contains the MISR data of the current interval for CORE1 in the case of segment0 and the remaining Segments 1 to 3. This value will be compared with the GOLDEN MISR value copied from ROM. This register gets reset to its default value with Power on or system reset assertion. The MISR values should be read only after the Self Test is completed.

Copyright © 2025 Texas Instruments Incorporated

11.8.8.7.5.26 CORE1_CURMISR_10 Register (Offset = 64h) [Reset = 00000000h]

CORE1_CURMISR_10 is shown in Table 11-2090.

Return to the Summary Table.

Holds the MISR signature for CORE1

Table 11-2090. CORE1_CURMISR_10 Register Field Descriptions

Bit	Field	Type	Reset	Description
31-0	C1MISR10	R	0h	MISR Signature for CORE1 This register contains the MISR data of the current interval for CORE1 in the case of segment0 and the remaining Segments 1 to 3. This value will be compared with the GOLDEN MISR value copied from ROM. This register gets reset to its default value with Power on or system reset assertion. The MISR values should be read only after the Self Test is completed.

Copyright © 2025 Texas Instruments Incorporated

11.8.8.7.5.27 CORE1_CURMISR_11 Register (Offset = 68h) [Reset = 00000000h]

CORE1_CURMISR_11 is shown in Table 11-2091.

Return to the Summary Table.

Holds the MISR signature for CORE1

Table 11-2091. CORE1_CURMISR_11 Register Field Descriptions

Bit	Field	Type	Reset	Description
31-0	C1MISR11	R	0h	MISR Signature for CORE1 This register contains the MISR data of the current interval for CORE1 in the case of segment0 and the remaining Segments 1 to 3. This value will be compared with the GOLDEN MISR value copied from ROM. This register gets reset to its default value with Power on or system reset assertion. The MISR values should be read only after the Self Test is completed.

Copyright © 2025 Texas Instruments Incorporated

11.8.8.7.5.28 CORE1_CURMISR_12 Register (Offset = 6Ch) [Reset = 00000000h]

CORE1_CURMISR_12 is shown in Table 11-2092.

Return to the Summary Table.

Holds the MISR signature for CORE1

Table 11-2092. CORE1_CURMISR_12 Register Field Descriptions

Bit	Field	Type	Reset	Description
31-0	C1MISR12	R	0h	MISR Signature for CORE1 This register contains the MISR data of the current interval for CORE1 in the case of segment0 and the remaining Segments 1 to 3. This value will be compared with the GOLDEN MISR value copied from ROM. This register gets reset to its default value with Power on or system reset assertion. The MISR values should be read only after the Self Test is completed.

Copyright © 2025 Texas Instruments Incorporated

11.8.8.7.5.29 CORE1_CURMISR_13 Register (Offset = 70h) [Reset = 00000000h]

CORE1_CURMISR_13 is shown in Table 11-2093.

Return to the Summary Table.

Holds the MISR signature for CORE1

Table 11-2093. CORE1_CURMISR_13 Register Field Descriptions

Bit	Field	Type	Reset	Description
31-0	C1MISR13	R	0h	MISR Signature for CORE1 This register contains the MISR data of the current interval for CORE1 in the case of segment0 and the remaining Segments 1 to 3. This value will be compared with the GOLDEN MISR value copied from ROM. This register gets reset to its default value with Power on or system reset assertion. The MISR values should be read only after the Self Test is completed.

Copyright © 2025 Texas Instruments Incorporated

11.8.8.7.5.30 CORE1_CURMISR_14 Register (Offset = 74h) [Reset = 00000000h]

CORE1_CURMISR_14 is shown in Table 11-2094.

Return to the Summary Table.

Holds the MISR signature for CORE1

Table 11-2094. CORE1_CURMISR_14 Register Field Descriptions

Bit	Field	Type	Reset	Description
31-0	C1MISR14	R	0h	MISR Signature for CORE1 This register contains the MISR data of the current interval for CORE1 in the case of segment0 and the remaining Segments 1 to 3. This value will be compared with the GOLDEN MISR value copied from ROM. This register gets reset to its default value with Power on or system reset assertion. The MISR values should be read only after the Self Test is completed.

Copyright © 2025 Texas Instruments Incorporated

11.8.8.7.5.31 CORE1_CURMISR_15 Register (Offset = 78h) [Reset = 00000000h]

CORE1_CURMISR_15 is shown in Table 11-2095.

Return to the Summary Table.

Holds the MISR signature for CORE1

Table 11-2095. CORE1_CURMISR_15 Register Field Descriptions

Bit	Field	Type	Reset	Description
31-0	C1MISR15	R	0h	MISR Signature for CORE1 This register contains the MISR data of the current interval for CORE1 in the case of segment0 and the remaining Segments 1 to 3. This value will be compared with the GOLDEN MISR value copied from ROM. This register gets reset to its default value with Power on or system reset assertion. The MISR values should be read only after the Self Test is completed.

Copyright © 2025 Texas Instruments Incorporated

11.8.8.7.5.32 CORE1_CURMISR_16 Register (Offset = 7Ch) [Reset = 00000000h]

CORE1_CURMISR_16 is shown in Table 11-2096.

Return to the Summary Table.

Holds the MISR signature for CORE1

Table 11-2096. CORE1_CURMISR_16 Register Field Descriptions

Bit	Field	Type	Reset	Description
31-0	C1MISR16	R	0h	MISR Signature for CORE1 This register contains the MISR data of the current interval for CORE1 in the case of segment0 and the remaining Segments 1 to 3. This value will be compared with the GOLDEN MISR value copied from ROM. This register gets reset to its default value with Power on or system reset assertion. The MISR values should be read only after the Self Test is completed.

Copyright © 2025 Texas Instruments Incorporated

11.8.8.7.5.33 CORE1_CURMISR_17 Register (Offset = 80h) [Reset = 00000000h]

CORE1_CURMISR_17 is shown in Table 11-2097.

Return to the Summary Table.

Holds the MISR signature for CORE1

Table 11-2097. CORE1_CURMISR_17 Register Field Descriptions

Bit	Field	Type	Reset	Description
31-0	C1MISR17	R	0h	MISR Signature for CORE1 This register contains the MISR data of the current interval for CORE1 in the case of segment0 and the remaining Segments 1 to 3. This value will be compared with the GOLDEN MISR value copied from ROM. This register gets reset to its default value with Power on or system reset assertion. The MISR values should be read only after the Self Test is completed.

Copyright © 2025 Texas Instruments Incorporated

11.8.8.7.5.34 CORE1_CURMISR_18 Register (Offset = 84h) [Reset = 00000000h]

CORE1_CURMISR_18 is shown in Table 11-2098.

Return to the Summary Table.

Holds the MISR signature for CORE1

Table 11-2098. CORE1_CURMISR_18 Register Field Descriptions

Bit	Field	Type	Reset	Description
31-0	C1MISR18	R	0h	MISR Signature for CORE1 This register contains the MISR data of the current interval for CORE1 in the case of segment0 and the remaining Segments 1 to 3. This value will be compared with the GOLDEN MISR value copied from ROM. This register gets reset to its default value with Power on or system reset assertion. The MISR values should be read only after the Self Test is completed.

Copyright © 2025 Texas Instruments Incorporated

11.8.8.7.5.35 CORE1_CURMISR_19 Register (Offset = 88h) [Reset = 00000000h]

CORE1_CURMISR_19 is shown in Table 11-2099.

Return to the Summary Table.

Holds the MISR signature for CORE1

Table 11-2099. CORE1_CURMISR_19 Register Field Descriptions

Bit	Field	Type	Reset	Description
31-0	C1MISR19	R	0h	MISR Signature for CORE1 This register contains the MISR data of the current interval for CORE1 in the case of segment0 and the remaining Segments 1 to 3. This value will be compared with the GOLDEN MISR value copied from ROM. This register gets reset to its default value with Power on or system reset assertion. The MISR values should be read only after the Self Test is completed.

Copyright © 2025 Texas Instruments Incorporated

11.8.8.7.5.36 CORE1_CURMISR_20 Register (Offset = 8Ch) [Reset = 00000000h]

CORE1_CURMISR_20 is shown in Table 11-2100.

Return to the Summary Table.

Holds the MISR signature for CORE1

Table 11-2100. CORE1_CURMISR_20 Register Field Descriptions

Bit	Field	Type	Reset	Description
31-0	C1MISR20	R	0h	MISR Signature for CORE1 This register contains the MISR data of the current interval for CORE1 in the case of segment0 and the remaining Segments 1 to 3. This value will be compared with the GOLDEN MISR value copied from ROM. This register gets reset to its default value with Power on or system reset assertion. The MISR values should be read only after the Self Test is completed.

Copyright © 2025 Texas Instruments Incorporated

11.8.8.7.5.37 CORE1_CURMISR_21 Register (Offset = 90h) [Reset = 00000000h]

CORE1_CURMISR_21 is shown in Table 11-2101.

Return to the Summary Table.

Holds the MISR signature for CORE1

Table 11-2101. CORE1_CURMISR_21 Register Field Descriptions

Bit	Field	Type	Reset	Description
31-0	C1MISR21	R	0h	MISR Signature for CORE1 This register contains the MISR data of the current interval for CORE1 in the case of segment0 and the remaining Segments 1 to 3. This value will be compared with the GOLDEN MISR value copied from ROM. This register gets reset to its default value with Power on or system reset assertion. The MISR values should be read only after the Self Test is completed.

Copyright © 2025 Texas Instruments Incorporated

11.8.8.7.5.38 CORE1_CURMISR_22 Register (Offset = 94h) [Reset = 00000000h]

CORE1_CURMISR_22 is shown in Table 11-2102.

Return to the Summary Table.

Holds the MISR signature for CORE1

Table 11-2102. CORE1_CURMISR_22 Register Field Descriptions

Bit	Field	Type	Reset	Description
31-0	C1MISR22	R	0h	MISR Signature for CORE1 This register contains the MISR data of the current interval for CORE1 in the case of segment0 and the remaining Segments 1 to 3. This value will be compared with the GOLDEN MISR value copied from ROM. This register gets reset to its default value with Power on or system reset assertion. The MISR values should be read only after the Self Test is completed.

Copyright © 2025 Texas Instruments Incorporated

11.8.8.7.5.39 CORE1_CURMISR_23 Register (Offset = 98h) [Reset = 00000000h]

CORE1_CURMISR_23 is shown in Table 11-2103.

Return to the Summary Table.

Holds the MISR signature for CORE1

Table 11-2103. CORE1_CURMISR_23 Register Field Descriptions

Bit	Field	Type	Reset	Description
31-0	C1MISR23	R	0h	MISR Signature for CORE1 This register contains the MISR data of the current interval for CORE1 in the case of segment0 and the remaining Segments 1 to 3. This value will be compared with the GOLDEN MISR value copied from ROM. This register gets reset to its default value with Power on or system reset assertion. The MISR values should be read only after the Self Test is completed.

Copyright © 2025 Texas Instruments Incorporated

11.8.8.7.5.40 CORE1_CURMISR_24 Register (Offset = 9Ch) [Reset = 00000000h]

CORE1_CURMISR_24 is shown in Table 11-2104.

Return to the Summary Table.

Holds the MISR signature for CORE1

Table 11-2104. CORE1_CURMISR_24 Register Field Descriptions

Bit	Field	Type	Reset	Description
31-0	C1MISR24	R	0h	MISR Signature for CORE1 This register contains the MISR data of the current interval for CORE1 in the case of segment0 and the remaining Segments 1 to 3. This value will be compared with the GOLDEN MISR value copied from ROM. This register gets reset to its default value with Power on or system reset assertion. The MISR values should be read only after the Self Test is completed.

Copyright © 2025 Texas Instruments Incorporated

11.8.8.7.5.41 CORE1_CURMISR_25 Register (Offset = A0h) [Reset = 00000000h]

CORE1_CURMISR_25 is shown in Table 11-2105.

Return to the Summary Table.

Holds the MISR signature for CORE1

Table 11-2105. CORE1_CURMISR_25 Register Field Descriptions

Bit	Field	Type	Reset	Description
31-0	C1MISR25	R	0h	MISR Signature for CORE1 This register contains the MISR data of the current interval for CORE1 in the case of segment0 and the remaining Segments 1 to 3. This value will be compared with the GOLDEN MISR value copied from ROM. This register gets reset to its default value with Power on or system reset assertion. The MISR values should be read only after the Self Test is completed.

Copyright © 2025 Texas Instruments Incorporated

11.8.8.7.5.42 CORE1_CURMISR_26 Register (Offset = A4h) [Reset = 00000000h]

CORE1_CURMISR_26 is shown in Table 11-2106.

Return to the Summary Table.

Holds the MISR signature for CORE1

Table 11-2106. CORE1_CURMISR_26 Register Field Descriptions

Bit	Field	Type	Reset	Description
31-0	C1MISR26	R	0h	MISR Signature for CORE1 This register contains the MISR data of the current interval for CORE1 in the case of segment0 and the remaining Segments 1 to 3. This value will be compared with the GOLDEN MISR value copied from ROM. This register gets reset to its default value with Power on or system reset assertion. The MISR values should be read only after the Self Test is completed.

Copyright © 2025 Texas Instruments Incorporated

11.8.8.7.5.43 CORE1_CURMISR_27 Register (Offset = A8h) [Reset = 00000000h]

CORE1_CURMISR_27 is shown in Table 11-2107.

Return to the Summary Table.

Holds the MISR signature for CORE1

Table 11-2107. CORE1_CURMISR_27 Register Field Descriptions

Bit	Field	Type	Reset	Description
31-0	C1MISR27	R	0h	MISR Signature for CORE1 This register contains the MISR data of the current interval for CORE1 in the case of segment0 and the remaining Segments 1 to 3. This value will be compared with the GOLDEN MISR value copied from ROM. This register gets reset to its default value with Power on or system reset assertion. The MISR values should be read only after the Self Test is completed.

Copyright © 2025 Texas Instruments Incorporated

11.8.8.7.5.44 CORE2_CURMISR_0 Register (Offset = ACh) [Reset = 00000000h]

CORE2_CURMISR_0 is shown in Table 11-2108.

Return to the Summary Table.

Holds the MISR signature for CORE2

Table 11-2108. CORE2_CURMISR_0 Register Field Descriptions

Bit	Field	Type	Reset	Description
31-0	C2MISR0	R	0h	MISR Signature for CORE2 This register contains the MISR data from the CORE2 for the current interval. This is applicable to Segment 0 alone. This value will be compared with the GOLDEN MISR value copied from ROM. This register gets reset to its default value with Power on or system reset assertion. The MISR values should be read only after the Self Test is completed.

Copyright © 2025 Texas Instruments Incorporated

11.8.8.7.5.45 CORE2_CURMISR_1 Register (Offset = B0h) [Reset = 00000000h]

CORE2_CURMISR_1 is shown in Table 11-2109.

Return to the Summary Table.

Holds the MISR signature for CORE2

Table 11-2109. CORE2_CURMISR_1 Register Field Descriptions

Bit	Field	Type	Reset	Description
31-0	C2MISR1	R	0h	MISR Signature for CORE2 This register contains the MISR data from the CORE2 for the current interval. This is applicable to Segment 0 alone. This value will be compared with the GOLDEN MISR value copied from ROM. This register gets reset to its default value with Power on or system reset assertion. The MISR values should be read only after the Self Test is completed.

Copyright © 2025 Texas Instruments Incorporated

11.8.8.7.5.46 CORE2_CURMISR_2 Register (Offset = B4h) [Reset = 00000000h]

CORE2_CURMISR_2 is shown in Table 11-2110.

Return to the Summary Table.

Holds the MISR signature for CORE2

Table 11-2110. CORE2_CURMISR_2 Register Field Descriptions

Bit	Field	Type	Reset	Description
31-0	C2MISR2	R	0h	MISR Signature for CORE2 This register contains the MISR data from the CORE2 for the current interval. This is applicable to Segment 0 alone. This value will be compared with the GOLDEN MISR value copied from ROM. This register gets reset to its default value with Power on or system reset assertion. The MISR values should be read only after the Self Test is completed.

Copyright © 2025 Texas Instruments Incorporated

11.8.8.7.5.47 CORE2_CURMISR_3 Register (Offset = B8h) [Reset = 00000000h]

CORE2_CURMISR_3 is shown in Table 11-2111.

Return to the Summary Table.

Holds the MISR signature for CORE2

Table 11-2111. CORE2_CURMISR_3 Register Field Descriptions

Bit	Field	Type	Reset	Description
31-0	C2MISR3	R	0h	MISR Signature for CORE2 This register contains the MISR data from the CORE2 for the current interval. This is applicable to Segment 0 alone. This value will be compared with the GOLDEN MISR value copied from ROM. This register gets reset to its default value with Power on or system reset assertion. The MISR values should be read only after the Self Test is completed.

Copyright © 2025 Texas Instruments Incorporated

11.8.8.7.5.48 CORE2_CURMISR_4 Register (Offset = BCh) [Reset = 00000000h]

CORE2_CURMISR_4 is shown in Table 11-2112.

Return to the Summary Table.

Holds the MISR signature for CORE2

Table 11-2112. CORE2_CURMISR_4 Register Field Descriptions

Bit	Field	Type	Reset	Description
31-0	C2MISR4	R	0h	MISR Signature for CORE2 This register contains the MISR data from the CORE2 for the current interval. This is applicable to Segment 0 alone. This value will be compared with the GOLDEN MISR value copied from ROM. This register gets reset to its default value with Power on or system reset assertion. The MISR values should be read only after the Self Test is completed.

Copyright © 2025 Texas Instruments Incorporated

11.8.8.7.5.49 CORE2_CURMISR_5 Register (Offset = C0h) [Reset = 00000000h]

CORE2_CURMISR_5 is shown in Table 11-2113.

Return to the Summary Table.

Holds the MISR signature for CORE2

Table 11-2113. CORE2_CURMISR_5 Register Field Descriptions

Bit	Field	Type	Reset	Description
31-0	C2MISR5	R	0h	MISR Signature for CORE2 This register contains the MISR data from the CORE2 for the current interval. This is applicable to Segment 0 alone. This value will be compared with the GOLDEN MISR value copied from ROM. This register gets reset to its default value with Power on or system reset assertion. The MISR values should be read only after the Self Test is completed.

Copyright © 2025 Texas Instruments Incorporated

11.8.8.7.5.50 CORE2_CURMISR_6 Register (Offset = C4h) [Reset = 00000000h]

CORE2_CURMISR_6 is shown in Table 11-2114.

Return to the Summary Table.

Holds the MISR signature for CORE2

Table 11-2114. CORE2_CURMISR_6 Register Field Descriptions

Bit	Field	Type	Reset	Description
31-0	C2MISR6	R	0h	MISR Signature for CORE2 This register contains the MISR data from the CORE2 for the current interval. This is applicable to Segment 0 alone. This value will be compared with the GOLDEN MISR value copied from ROM. This register gets reset to its default value with Power on or system reset assertion. The MISR values should be read only after the Self Test is completed.

Copyright © 2025 Texas Instruments Incorporated

11.8.8.7.5.51 CORE2_CURMISR_7 Register (Offset = C8h) [Reset = 00000000h]

CORE2_CURMISR_7 is shown in Table 11-2115.

Return to the Summary Table.

Holds the MISR signature for CORE2

Table 11-2115. CORE2_CURMISR_7 Register Field Descriptions

Bit	Field	Type	Reset	Description
31-0	C2MISR7	R	0h	MISR Signature for CORE2 This register contains the MISR data from the CORE2 for the current interval. This is applicable to Segment 0 alone. This value will be compared with the GOLDEN MISR value copied from ROM. This register gets reset to its default value with Power on or system reset assertion. The MISR values should be read only after the Self Test is completed.

Copyright © 2025 Texas Instruments Incorporated

11.8.8.7.5.52 CORE2_CURMISR_8 Register (Offset = CCh) [Reset = 00000000h]

CORE2_CURMISR_8 is shown in Table 11-2116.

Return to the Summary Table.

Holds the MISR signature for CORE2

Table 11-2116. CORE2_CURMISR_8 Register Field Descriptions

Bit	Field	Type	Reset	Description
31-0	C2MISR8	R	0h	MISR Signature for CORE2 This register contains the MISR data from the CORE2 for the current interval. This is applicable to Segment 0 alone. This value will be compared with the GOLDEN MISR value copied from ROM. This register gets reset to its default value with Power on or system reset assertion. The MISR values should be read only after the Self Test is completed.

Copyright © 2025 Texas Instruments Incorporated

11.8.8.7.5.53 CORE2_CURMISR_9 Register (Offset = D0h) [Reset = 00000000h]

CORE2_CURMISR_9 is shown in Table 11-2117.

Return to the Summary Table.

Holds the MISR signature for CORE2

Table 11-2117. CORE2_CURMISR_9 Register Field Descriptions

Bit	Field	Type	Reset	Description
31-0	C2MISR9	R	0h	MISR Signature for CORE2 This register contains the MISR data from the CORE2 for the current interval. This is applicable to Segment 0 alone. This value will be compared with the GOLDEN MISR value copied from ROM. This register gets reset to its default value with Power on or system reset assertion. The MISR values should be read only after the Self Test is completed.

Copyright © 2025 Texas Instruments Incorporated

11.8.8.7.5.54 CORE2_CURMISR_10 Register (Offset = D4h) [Reset = 00000000h]

CORE2_CURMISR_10 is shown in Table 11-2118.

Return to the Summary Table.

Holds the MISR signature for CORE2

Table 11-2118. CORE2_CURMISR_10 Register Field Descriptions

Bit	Field	Type	Reset	Description
31-0	C2MISR10	R	0h	MISR Signature for CORE2 This register contains the MISR data from the CORE2 for the current interval. This is applicable to Segment 0 alone. This value will be compared with the GOLDEN MISR value copied from ROM. This register gets reset to its default value with Power on or system reset assertion. The MISR values should be read only after the Self Test is completed.

Copyright © 2025 Texas Instruments Incorporated

11.8.8.7.5.55 CORE2_CURMISR_11 Register (Offset = D8h) [Reset = 00000000h]

CORE2_CURMISR_11 is shown in Table 11-2119.

Return to the Summary Table.

Holds the MISR signature for CORE2

Table 11-2119. CORE2_CURMISR_11 Register Field Descriptions

Bit	Field	Type	Reset	Description
31-0	C2MISR11	R	0h	MISR Signature for CORE2 This register contains the MISR data from the CORE2 for the current interval. This is applicable to Segment 0 alone. This value will be compared with the GOLDEN MISR value copied from ROM. This register gets reset to its default value with Power on or system reset assertion. The MISR values should be read only after the Self Test is completed.

Copyright © 2025 Texas Instruments Incorporated

11.8.8.7.5.56 CORE2_CURMISR_12 Register (Offset = DCh) [Reset = 00000000h]

CORE2_CURMISR_12 is shown in Table 11-2120.

Return to the Summary Table.

Holds the MISR signature for CORE2

Table 11-2120. CORE2_CURMISR_12 Register Field Descriptions

Bit	Field	Type	Reset	Description
31-0	C2MISR12	R	0h	MISR Signature for CORE2 This register contains the MISR data from the CORE2 for the current interval. This is applicable to Segment 0 alone. This value will be compared with the GOLDEN MISR value copied from ROM. This register gets reset to its default value with Power on or system reset assertion. The MISR values should be read only after the Self Test is completed.

Copyright © 2025 Texas Instruments Incorporated

11.8.8.7.5.57 CORE2_CURMISR_13 Register (Offset = E0h) [Reset = 00000000h]

CORE2_CURMISR_13 is shown in Table 11-2121.

Return to the Summary Table.

Holds the MISR signature for CORE2

Table 11-2121. CORE2_CURMISR_13 Register Field Descriptions

Bit	Field	Type	Reset	Description
31-0	C2MISR13	R	0h	MISR Signature for CORE2 This register contains the MISR data from the CORE2 for the current interval. This is applicable to Segment 0 alone. This value will be compared with the GOLDEN MISR value copied from ROM. This register gets reset to its default value with Power on or system reset assertion. The MISR values should be read only after the Self Test is completed.

Copyright © 2025 Texas Instruments Incorporated

11.8.8.7.5.58 CORE2_CURMISR_14 Register (Offset = E4h) [Reset = 00000000h]

CORE2_CURMISR_14 is shown in Table 11-2122.

Return to the Summary Table.

Holds the MISR signature for CORE2

Table 11-2122. CORE2_CURMISR_14 Register Field Descriptions

Bit	Field	Type	Reset	Description
31-0	C2MISR14	R	0h	MISR Signature for CORE2 This register contains the MISR data from the CORE2 for the current interval. This is applicable to Segment 0 alone. This value will be compared with the GOLDEN MISR value copied from ROM. This register gets reset to its default value with Power on or system reset assertion. The MISR values should be read only after the Self Test is completed.

Copyright © 2025 Texas Instruments Incorporated

11.8.8.7.5.59 CORE2_CURMISR_15 Register (Offset = E8h) [Reset = 00000000h]

CORE2_CURMISR_15 is shown in Table 11-2123.

Return to the Summary Table.

Holds the MISR signature for CORE2

Table 11-2123. CORE2_CURMISR_15 Register Field Descriptions

Bit	Field	Type	Reset	Description
31-0	C2MISR15	R	0h	MISR Signature for CORE2 This register contains the MISR data from the CORE2 for the current interval. This is applicable to Segment 0 alone. This value will be compared with the GOLDEN MISR value copied from ROM. This register gets reset to its default value with Power on or system reset assertion. The MISR values should be read only after the Self Test is completed.

Copyright © 2025 Texas Instruments Incorporated

11.8.8.7.5.60 CORE2_CURMISR_16 Register (Offset = ECh) [Reset = 00000000h]

CORE2_CURMISR_16 is shown in Table 11-2124.

Return to the Summary Table.

Holds the MISR signature for CORE2

Table 11-2124. CORE2_CURMISR_16 Register Field Descriptions

Bit	Field	Type	Reset	Description
31-0	C2MISR16	R	0h	MISR Signature for CORE2 This register contains the MISR data from the CORE2 for the current interval. This is applicable to Segment 0 alone. This value will be compared with the GOLDEN MISR value copied from ROM. This register gets reset to its default value with Power on or system reset assertion. The MISR values should be read only after the Self Test is completed.

Copyright © 2025 Texas Instruments Incorporated

11.8.8.7.5.61 CORE2_CURMISR_17 Register (Offset = F0h) [Reset = 00000000h]

CORE2_CURMISR_17 is shown in Table 11-2125.

Return to the Summary Table.

Holds the MISR signature for CORE2

Table 11-2125. CORE2_CURMISR_17 Register Field Descriptions

Bit	Field	Type	Reset	Description
31-0	C2MISR17	R	0h	MISR Signature for CORE2 This register contains the MISR data from the CORE2 for the current interval. This is applicable to Segment 0 alone. This value will be compared with the GOLDEN MISR value copied from ROM. This register gets reset to its default value with Power on or system reset assertion. The MISR values should be read only after the Self Test is completed.

Copyright © 2025 Texas Instruments Incorporated

11.8.8.7.5.62 CORE2_CURMISR_18 Register (Offset = F4h) [Reset = 00000000h]

CORE2_CURMISR_18 is shown in Table 11-2126.

Return to the Summary Table.

Holds the MISR signature for CORE2

Table 11-2126. CORE2_CURMISR_18 Register Field Descriptions

Bit	Field	Type	Reset	Description
31-0	C2MISR18	R	0h	MISR Signature for CORE2 This register contains the MISR data from the CORE2 for the current interval. This is applicable to Segment 0 alone. This value will be compared with the GOLDEN MISR value copied from ROM. This register gets reset to its default value with Power on or system reset assertion. The MISR values should be read only after the Self Test is completed.

Copyright © 2025 Texas Instruments Incorporated

11.8.8.7.5.63 CORE2_CURMISR_19 Register (Offset = F8h) [Reset = 00000000h]

CORE2_CURMISR_19 is shown in Table 11-2127.

Return to the Summary Table.

Holds the MISR signature for CORE2

Table 11-2127. CORE2_CURMISR_19 Register Field Descriptions

Bit	Field	Type	Reset	Description
31-0	C2MISR19	R	0h	MISR Signature for CORE2 This register contains the MISR data from the CORE2 for the current interval. This is applicable to Segment 0 alone. This value will be compared with the GOLDEN MISR value copied from ROM. This register gets reset to its default value with Power on or system reset assertion. The MISR values should be read only after the Self Test is completed.

Copyright © 2025 Texas Instruments Incorporated

11.8.8.7.5.64 CORE2_CURMISR_20 Register (Offset = FCh) [Reset = 00000000h]

CORE2_CURMISR_20 is shown in Table 11-2128.

Return to the Summary Table.

Holds the MISR signature for CORE2

Table 11-2128. CORE2_CURMISR_20 Register Field Descriptions

Bit	Field	Type	Reset	Description
31-0	C2MISR20	R	0h	MISR Signature for CORE2 This register contains the MISR data from the CORE2 for the current interval. This is applicable to Segment 0 alone. This value will be compared with the GOLDEN MISR value copied from ROM. This register gets reset to its default value with Power on or system reset assertion. The MISR values should be read only after the Self Test is completed.

Copyright © 2025 Texas Instruments Incorporated

11.8.8.7.5.65 CORE2_CURMISR_21 Register (Offset = 100h) [Reset = 00000000h]

CORE2_CURMISR_21 is shown in Table 11-2129.

Return to the Summary Table.

Holds the MISR signature for CORE2

Table 11-2129. CORE2_CURMISR_21 Register Field Descriptions

Bit	Field	Type	Reset	Description
31-0	C2MISR21	R	0h	MISR Signature for CORE2 This register contains the MISR data from the CORE2 for the current interval. This is applicable to Segment 0 alone. This value will be compared with the GOLDEN MISR value copied from ROM. This register gets reset to its default value with Power on or system reset assertion. The MISR values should be read only after the Self Test is completed.

Copyright © 2025 Texas Instruments Incorporated

11.8.8.7.5.66 CORE2_CURMISR_22 Register (Offset = 104h) [Reset = 00000000h]

CORE2_CURMISR_22 is shown in Table 11-2130.

Return to the Summary Table.

Holds the MISR signature for CORE2

Table 11-2130. CORE2_CURMISR_22 Register Field Descriptions

Bit	Field	Type	Reset	Description
31-0	C2MISR22	R	0h	MISR Signature for CORE2 This register contains the MISR data from the CORE2 for the current interval. This is applicable to Segment 0 alone. This value will be compared with the GOLDEN MISR value copied from ROM. This register gets reset to its default value with Power on or system reset assertion. The MISR values should be read only after the Self Test is completed.

Copyright © 2025 Texas Instruments Incorporated

11.8.8.7.5.67 CORE2_CURMISR_23 Register (Offset = 108h) [Reset = 00000000h]

CORE2_CURMISR_23 is shown in Table 11-2131.

Return to the Summary Table.

Holds the MISR signature for CORE2

Table 11-2131. CORE2_CURMISR_23 Register Field Descriptions

Bit	Field	Type	Reset	Description
31-0	C2MISR23	R	0h	MISR Signature for CORE2 This register contains the MISR data from the CORE2 for the current interval. This is applicable to Segment 0 alone. This value will be compared with the GOLDEN MISR value copied from ROM. This register gets reset to its default value with Power on or system reset assertion. The MISR values should be read only after the Self Test is completed.

Copyright © 2025 Texas Instruments Incorporated

11.8.8.7.5.68 CORE2_CURMISR_24 Register (Offset = 10Ch) [Reset = 00000000h]

CORE2_CURMISR_24 is shown in Table 11-2132.

Return to the Summary Table.

Holds the MISR signature for CORE2

Table 11-2132. CORE2_CURMISR_24 Register Field Descriptions

Bit	Field	Type	Reset	Description
31-0	C2MISR24	R	0h	MISR Signature for CORE2 This register contains the MISR data from the CORE2 for the current interval. This is applicable to Segment 0 alone. This value will be compared with the GOLDEN MISR value copied from ROM. This register gets reset to its default value with Power on or system reset assertion. The MISR values should be read only after the Self Test is completed.

Copyright © 2025 Texas Instruments Incorporated

11.8.8.7.5.69 CORE2_CURMISR_25 Register (Offset = 110h) [Reset = 00000000h]

CORE2_CURMISR_25 is shown in Table 11-2133.

Return to the Summary Table.

Holds the MISR signature for CORE2

Table 11-2133. CORE2_CURMISR_25 Register Field Descriptions

Bit	Field	Type	Reset	Description
31-0	C2MISR25	R	0h	MISR Signature for CORE2 This register contains the MISR data from the CORE2 for the current interval. This is applicable to Segment 0 alone. This value will be compared with the GOLDEN MISR value copied from ROM. This register gets reset to its default value with Power on or system reset assertion. The MISR values should be read only after the Self Test is completed.

Copyright © 2025 Texas Instruments Incorporated

11.8.8.7.5.70 CORE2_CURMISR_26 Register (Offset = 114h) [Reset = 00000000h]

CORE2_CURMISR_26 is shown in Table 11-2134.

Return to the Summary Table.

Holds the MISR signature for CORE2

Table 11-2134. CORE2_CURMISR_26 Register Field Descriptions

Bit	Field	Type	Reset	Description
31-0	C2MISR26	R	0h	MISR Signature for CORE2 This register contains the MISR data from the CORE2 for the current interval. This is applicable to Segment 0 alone. This value will be compared with the GOLDEN MISR value copied from ROM. This register gets reset to its default value with Power on or system reset assertion. The MISR values should be read only after the Self Test is completed.

Copyright © 2025 Texas Instruments Incorporated

11.8.8.7.5.71 CORE2_CURMISR_27 Register (Offset = 118h) [Reset = 00000000h]

CORE2_CURMISR_27 is shown in Table 11-2135.

Return to the Summary Table.

Holds the MISR signature for CORE2

Table 11-2135. CORE2_CURMISR_27 Register Field Descriptions

Bit	Field	Type	Reset	Description
31-0	C2MISR27	R	0h	MISR Signature for CORE2 This register contains the MISR data from the CORE2 for the current interval. This is applicable to Segment 0 alone. This value will be compared with the GOLDEN MISR value copied from ROM. This register gets reset to its default value with Power on or system reset assertion. The MISR values should be read only after the Self Test is completed.

11.8.8.8 Programmable Built-In Self-Test (PBIST)

This section describes the programmable built-in self-test (PBIST) controller module used for testing the on-chip memories.

11.8.8.8.1 Overview

The PBIST (Programmable Built-In Self-Test) controller architecture provides a run-time-programmable memory BIST engine for varying levels of coverage across many embedded memory instances.

Name	Frame Address (Hex) Start	Frame Address (Hex) End	Size	Description
TOP_PBIST	0x02F7_9400	0x02F7_95CC	464Bytes	PBIST module configuration registers. This IP covers memory test for all memories excluding DSP L1P, L1D and associated TAG memories
DSS_DSP_PBIST	0x06F7_9000	0x06F7_91CC	464Bytes	PBIST module configuration registers. This IP covers memory test for all memories excluding DSP L1P, L1D and associated TAG memories

11.8.8.8.1.1 PBIST vs. Application Software-Based Testing

The PBIST architecture consists of a small coprocessor with a dedicated instruction set targeted specifically toward testing memories. This coprocessor executes test routines stored in the PBIST ROM and runs them on multiple on-chip memory instances. The on-chip memory configuration information is also stored in the PBIST ROM.

The PBIST Controller architecture offers significant advantages over tests running on the main processor (application software-based testing):

- Embedded CPUs have a long access path to memories outside the tightly-couple memory sub-system, while the PBIST controller has a dedicated path to the memories specifically for the self-test
- Embedded CPUs are designed for their targeted use and are often not easily programmed for memory test algorithms.
- The memory test algorithm code on embedded CPUs is typically significantly larger than that needed for PBIST.
- The embedded CPU is significantly larger than the PBIST controller.

Copyright © 2025 Texas Instruments Incorporated

11.8.8.8.1.2 PBIST Block Diagram

Figure 11-835 illustrates the basic PBIST blocks and its wrapper logic for the device.

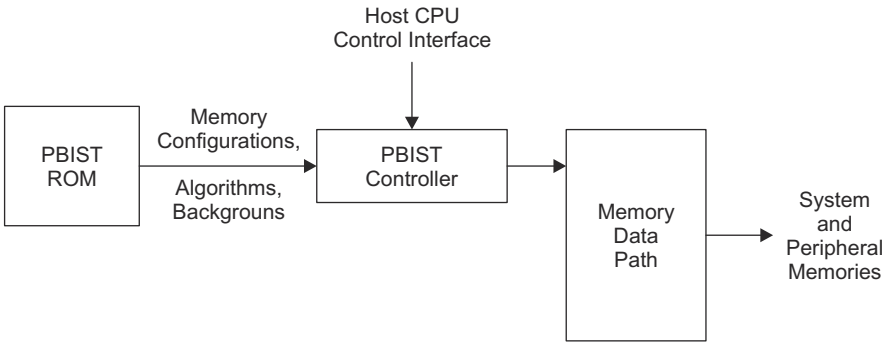

Figure 11-835. PBIST Block Diagram

Copyright © 2025 Texas Instruments Incorporated

11.8.8.8.1.2.1 On-chip ROM

The on-chip ROM contains the information regarding the algorithms and memories to be tested.

11.8.8.8.1.2.2 Host Processor Interface to the PBIST Controller Registers

The CPU can select the algorithm and RAM groups for the memories' self-test from the onchip ROM based on the application requirements. Once the self-test has executed, the CPU can query the PBIST controller registers to identify any memories that failed the self-test and to then take appropriate next steps as required by the application's author.

11.8.8.8.1.2.3 Memory Data Path

This is the read and write data path logic between different system and peripheral memories tightly coupled to the PBIST memory interface. The PBIST controller executes each selected algorithm on each valid memory group sequentially until all the algorithms are executed.

Note

NOTE: Not all algorithms are designed to run on all RAM groups. If an algorithm is selected to run on an incompatible memory, this will result in a failure. Refer to and for RAM grouping and algorithm information.

11.8.8.8.2 RAM/ROM Grouping and Algorithm

11.8.8.8.2.1 RAM Algorithm: March13N

This section provides a brief description for some of the test algorithms used for memory self-test.

•

• **March13N**:

– March13N is the baseline test algorithm for SRAM testing. It provides the highest overall coverage.

The other algorithms provide additional coverage of otherwise missed boundary conditions of the SRAM operation.

– The concept behind the general march algorithm is to indicate:

- The bits around the bit cell do not affect the bit cell.
- The bit cell can be written and read as both a 1 and a 0.

– The basic operation of the march is to initialize the array to a know pattern, then march a different pattern through the memory.

– Type of faults detected by this algorithm:

- Address decoder faults
- Stuck-At faults
- Coupled faults
- State coupling faults
- Parametric faults
- Write recovery faults
- Read/write logic faults

11.8.8.8.2.2 Read/write logic faults

The triple read reads the array, all the way through, three times while summing the reads to compare the sums for all three read formats. The algorithm checks if there is enough margin in both the erasure and programmation to operate at full speed with the CPU. This can be addressed with the XOR Read (Memory Contents XOR Memory Address). An error in the XOR Read indicates that the interaction between adjacent bit cells, being a different polarity, may be causing speed issues when the CPU exercises worstcase instruction sequencing. Each

Copyright © 2025 Texas Instruments Incorporated

read can be performed on any memory block, and an associated checksum is calculated to determine PASS or FAIL.

Type of faults detected by this algorithm:

- Address decoder faults
- Stuck-At faults
- Coupled faults
- State coupling faults
- Parametric faults
- Read logic faults

11.8.8.8.2.3

Note

March13N is the most recommended algorithm for the memory self-test

Copyright © 2025 Texas Instruments Incorporated

Chapter 12

On-chip Debug

The debug subsystem contains one MCUDebugss at its core that allows the JTAG interface access to device components. The debug subsystem is designed to provide the following debug features:

- JTAG debug access to debug resources, mapped through an ARM SWJ-DP and TI ICEPickM scan module
- System memory access without halting the processor
- Trace for C66x DSP
- ETM-based trace for ARM R5F
- Cross trigger to halt and restart MSS and DSP, based on events such as watchdog, timers, DMA, and time-stamp events
- Capability to read the device ID

12.1 AM273x On Chip Debug Architecture 4699

Copyright © 2025 Texas Instruments Incorporated

12.1 AM273x On Chip Debug Architecture

12.1.1 On Chip DebugOverview

On Chip Debug (also known as OneMCU DebugSS) is used in the AM273x platform. An overview of the interconnectivity of the debug ports and trace ports are shown in Figure 12-1.

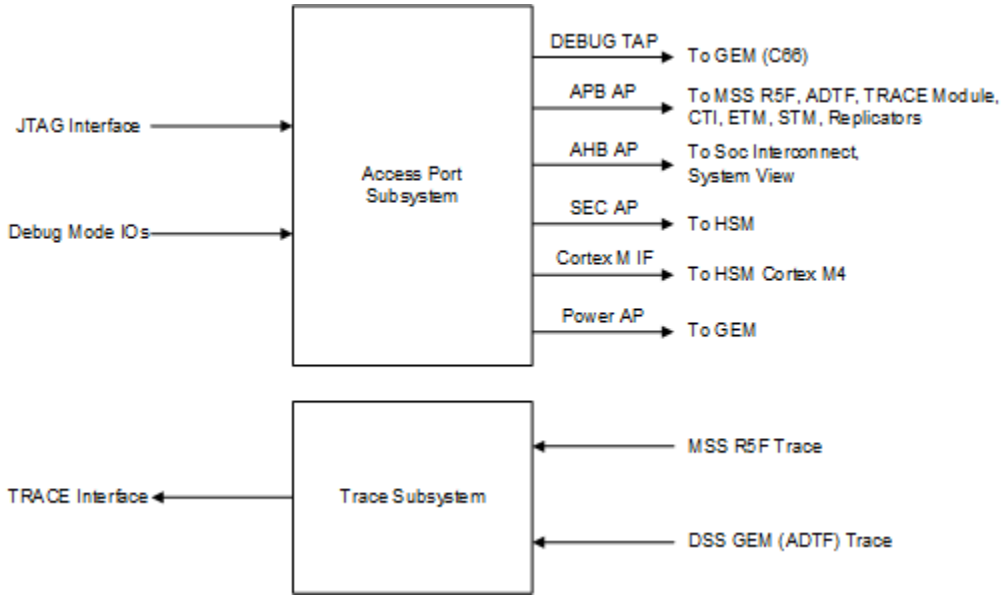

Figure 12-1. Debug SS Overview

12.1.2

The On Chip Debugarchitecture and the connectivity of the various debug components are shown in Figure 12-2.

Copyright © 2025 Texas Instruments Incorporated

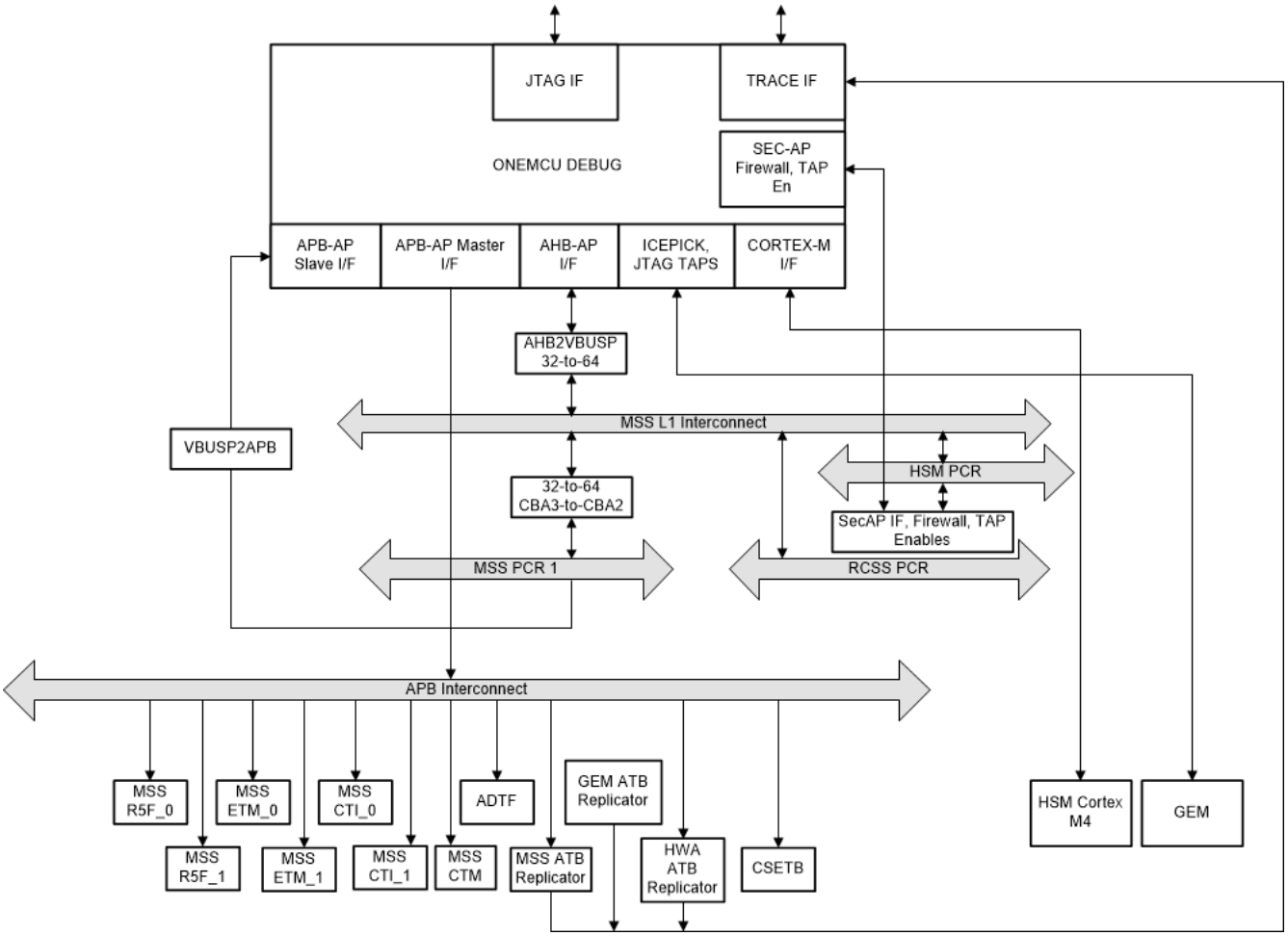

Figure 12-2. AM273x On Chip Debug Architecture

12.1.3 On Chip Debug Subsystem Address Map

The memory map view for RS232 and DAP AHB is the same as MSS CortexR5. Table 12-1 shows the APB Port Address Map for the AM273x.

Table 12-1. Debug Subsystem Address Map

APB Port	Block Name	Start Address Offset	End Address Offset
APB EXTERNAL PORT 0	C66x ADTF	0x00010000	0x00010FFF
APB EXTERNAL PORT 0	C66x ATB REPLICATOR	0x00011000	0x00011FFF
APB EXTERNAL PORT 0	MSS CR5 ATB REPLICATOR	0x00012000	0x00012FFF
APB EXTERNAL PORT 0	CSETB	0x00013000	0x00013FFF
APB EXTERNAL PORT 0	HSM CM4 REPLICATOR	0x00015000	0x00015FFF
APB EXTERNAL PORT 0	MDO INFRA CS-STM	0x00016000	0x00016FFF
APB EXTERNAL PORT 0	MDO INFRA CS-TPIU	0x00017000	0x00017FFF
APB EXTERNAL PORT 0	HSM CM4 CTI	0x00018000	0x00018FFF
APB EXTERNAL PORT 1	MSS CR5 ROM Table	0x00020000	0x00020FFF
APB EXTERNAL PORT 2	MSS CR5 C0	0x00030000	0x00030FFF
APB EXTERNAL PORT 2	MSS CR5 C1	0x00032000	0x00032FFF
APB EXTERNAL PORT 2	MSS CR5 C0 CTI	0x00038000	0x00038FFF
APB EXTERNAL PORT 2	MSS CR5 C1 CTI	0x00039000	0x00039FFF

Copyright © 2025 Texas Instruments Incorporated

Table 12-1. Debug Subsystem Address Map (continued)

APB Port	Block Name	Start Address Offset	End Address Offset
APB EXTERNAL PORT 2	MSS CR5 C0 ETM	0x0003C000	0x0003CFFF
APB EXTERNAL PORT 2	MSS CR5 C1 ETM	0x0003D000	0x0003DFFF

12.1.4 Trace Subsystem

12.1.4.1 Trace Infrastructure

The trace infrastructure is shown in Figure 12-3. Trace data from the MSS CR5 cores, C66x DSP core, and HSM Cortex M4 cores may be routed to the external trace lines over the TPIU-Trace interface. Alternately, there is an 8KB trace memory to store the configured (filtered) trace data onto the memory.

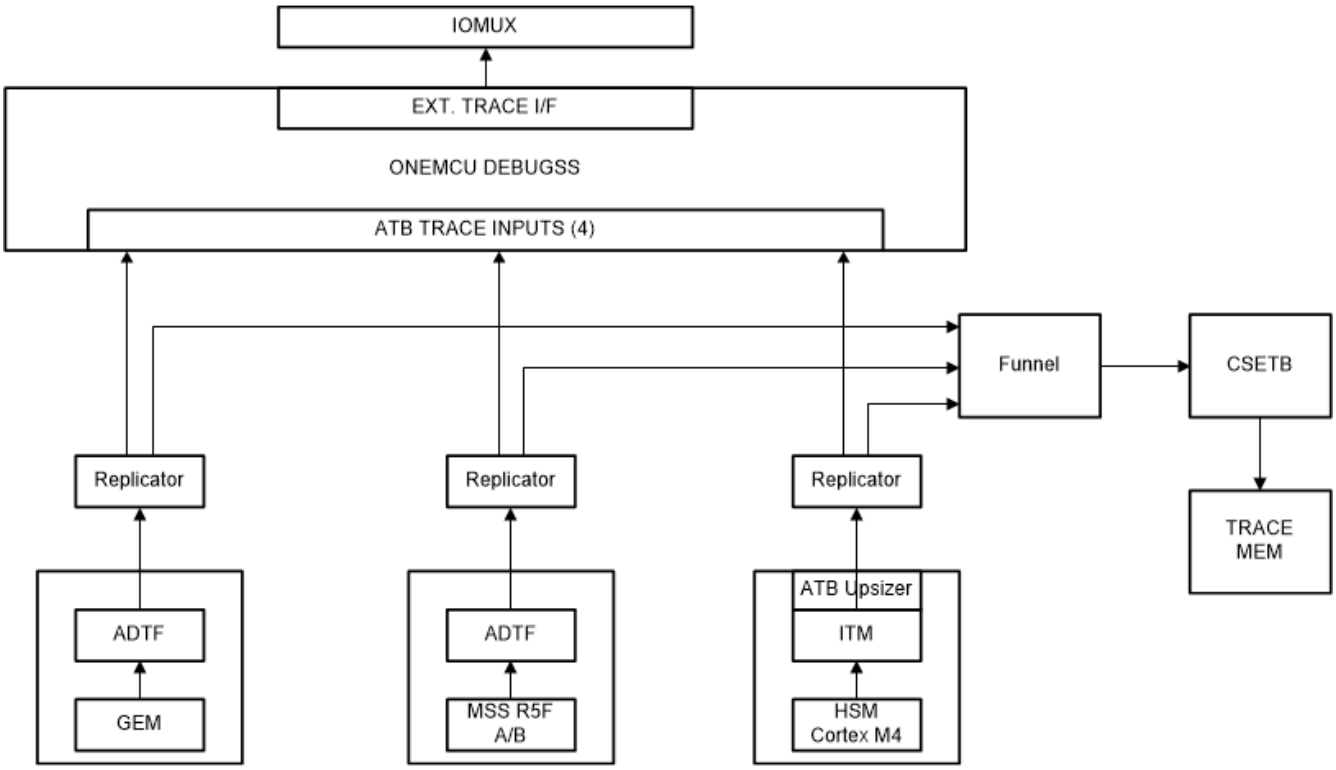

Figure 12-3. Trace Infrastructure

The CortexM4 ITM output requries an 8-bit to 32-bit ATB upsizer in the path to convert the signals to be compatible as input to the upstream layers/modules.

The maximum support frequency for the external interface trace clock is 125 MHz.

12.1.4.2 Cross Triggering

12.1.4.2.1 Cross Triggering Infrastructure

The cross triggering infrastructure is shown in Figure 12-4. The host processors involved in the cross triggering sequence are:

- MSS Cortex R5F cores, ETB
- C66x DSP cores, ADTF
- Host as suspend peripherals
  - HWA Accelerator

Copyright © 2025 Texas Instruments Incorporated

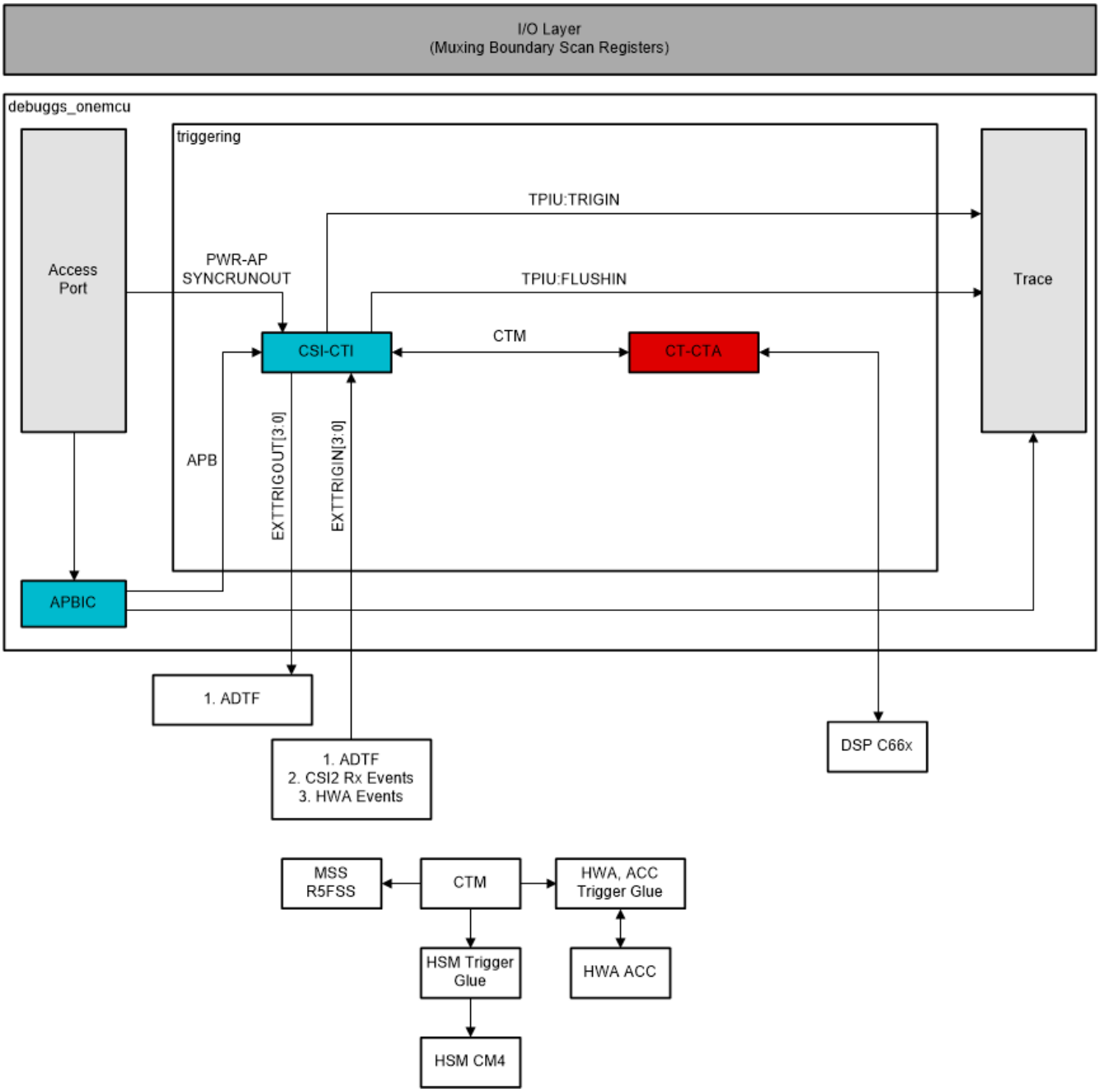

Figure 12-4. Cross Triggering Infrastructure

12.1.4.2.1.1 MSS CR5 CTI Trigger Input Connections

Table 12-2. MSS CR5 CTI Trigger Input Connections

CTI Trigger Input Bit	AM273x Integration	Description
[7]	MSS_INT_MAP	MSS CR5 Interrupt.
[6]	ETMTRIGGER	ETM managed Trigger. Generated internal to Cortex R5 Susbsystem
[5]	COMMTX	Communications channel transmit. Generated internal to Cortex R5 Susbsystem
[4]	COMMRX	Communications channel receive. Generated internal to Cortex R5 Susbsystem

Copyright © 2025 Texas Instruments Incorporated

Table 12-2. MSS CR5 CTI Trigger Input Connections (continued)

CTI Trigger Input Bit	AM273x Integration	Description
[3]	ETMEXTOUT[1]	ETM managed External Output Event 1. Generated internal to Cortex R5 Susbsystem
[2]	ETMEXTOUT[0]	ETM managed External Output Event 0. Generated internal to Cortex R5 Susbsystem
[1]	PMUIRQ	Interrupt request from performance monitoring unit. Generated internal to Cortex R5 Susbsystem
[0]	DBGTRIGGER	CPU is entering the debug state (halted). Generated internal to Cortex R5 Susbsystem

12.1.4.2.1.2 MSS CR5 CTI Trigger Output Connections

Table 12-3. MSS CR5 CTI Trigger Output Connections

CTI Trigger Output Bit	AM273x Integration	Description
[7]	Not Used	
[6]	ETMTRIGACK	ETM
[5]	Not Used	
[4]	DBGRESTART	External restart request
[3]	!nIRQ	CPU Interrupt Request
[2]	EXTIN[1]	ETM External Input 1
[1]	EXTIN[0]	ETM External Input 0
[0]	EDBGRQ	External halt request

12.1.4.2.1.3 Cortex M4 CTI Trigger Input Connections

Table 12-4. Cortex M4 CTI Trigger Input Connections

CTI Trigger Input Bit	AM273x Integration	Description
[7]	NC	
[6]	ETMTRIGGER[2]	ETM managed Trigger 2
[5]	ETMTRIGGER[1]	ETM managed Trigger 1
[4]	ETMTRIGGER[0]	ETM managed Trigger 0
[3]	NC	
[2]	NC	
[1]	NC	
[0]	HALTED	CPU has halted

12.1.4.2.1.4 Coretex M4 CTI Trigger Output Connections

Table 12-5. Coretex M4 CTI Trigger Output Connections

CTI Trigger Output bit	AM273x Integration	Description
[7]	DBGRESTART	External restart request
[6]	NC	
[5]	NC	
[4]	NC	
[3]	INTISR[Y]	NVIC Interrupt. Refer to Processor Interrupt Map for more details.
[2]	INTISR[X]	NVIC Interrupt. Refer to Processor Interrupt Map for more details.
[1]	User defined	-
[0]	EDBGRQ	External halt request

Copyright © 2025 Texas Instruments Incorporated

12.1.4.2.2 On Chip Debug CTI Cross Triggering

12.1.4.2.2.1 On Chip Debug CTI Trigger Input Connections

Table 12-6. On Chip Debug CTI Trigger Input Connections

CTI Trigger Input Bit	AM273x Integration	Source
[7]	MSS_CR5_INT_MAP	Select any of the 256 MSS CR5 Interrupts from Section. Configure the require interrupt as trigger by writing to MSS_CTRL:: MSS_DEBUGSS_CTI_TRIG_SEL: TRIG3
[6]	MSS_CR5_INT_MAP	Select any of the 256 MSS CR5 Interrupts from Section. Configure the require interrupt as trigger by writing to MSS_CTRL:: MSS_DEBUGSS_CTI_TRIG_SEL: TRIG2
[5]	MSS_CR5_INT_MAP	Select any of the 256 MSS CR5 Interrupts from Section. Configure the require interrupt as trigger by writing to MSS_CTRL:: MSS_DEBUGSS_CTI_TRIG_SEL: TRIG1
[4]	DSS_DSP_ATDF	DSS DSP ADTF Trigout
[3]	Reserved	ETM. Generated internal to Cortex R5 Susbsystem
[2]	Reserved	ETM. Generated internal to Cortex R5 Susbsystem
[1]	Reserved	Core. Generated internal to Cortex R5 Susbsystem
[0]	PWR-AP:SYNCRUNOUT	Core. Generated internal to Cortex R5 Susbsystem

12.1.4.2.2.2 On Chip Debug CTI Trigger Output Connections

Table 12-7. On Chip Debug CTI Trigger Output Connections

CTI Trigger Output Bit	AM273x Integration	Destination
[7]	Not Used	
[6]	Not Used	
[5]	Not Used	
[4]	CS-ET:TRIGIN	AM273x Embedded Trace Buffer
[3]	Reserved	
[2]	Reserved	
[1]	TPIU:FLUSHIN	Internal TPIU
[0]	TPIU:TRIGIN	Internal TPIU

12.1.5 Suspend Peripherals

The device supports a suspend feature, which provides a way to stop a "closely coupled" hardware process running on a peripheral-IP when the host processor enters a debug state. The suspend mechanism is important for debug to ensure that peripheral-IPs operate in a lock-step manner with a host controller processor.

Table 12-8. Suspend Peripherals

Subsystems Peripherals	CPU Suspend	Peripherals	Peripheral Control Register
MSS Peripherals	MSS CR5 Cores	MSS_ CPSW	MSS_CTRL:DBG_ACK_CTL0_CPSW
		MSS_MCANA	MSS_CTRL:DBG_ACK_CTL1_DCAN
		MSS_MCANB	MSS_CTRL:DBG_ACK_CTL1_DCAN
		MSS_WDT	MSS_CTRL:DBG_ACK_CTL1_WDT
		MSS_RTIA	MSS_CTRL:DBG_ACK_CTL1_RTI
		MSS_RTIB	MSS_CTRL:DBG_ACK_CTL1_RTI
		MSS_RTIC	MSS_CTRL:DBG_ACK_CTL1_RTI
		MSS_MCRC	MSS_CTRL:DBG_ACK_CTL1_MCRC
		MSS_I2C	MSS_CTRL:DBG_ACK_CTL1_I2C
		MSS_SCIA	MSS_CTRL:DBG_ACK_CTL1_SCIA
		MSS_SCIB	MSS_CTRL:DBG_ACK_CTL1_SCIB

Copyright © 2025 Texas Instruments Incorporated

Table 12-8. Suspend Peripherals (continued)

Subsystems Peripherals	CPU Suspend	Peripherals	Peripheral Control Register
DSS Peripherals	DSP or MSS CR5 based on DSS_CTRL:: DBG_ACK_CPU_CTRL	DSS_ DCCA	DSS_CTRL:DBG_ACK_CTL0_ DSS_ DCCA
		DSS_ DCCB	DSS_CTRL:DBG_ACK_CTL0_ DSS_ DCCB
		DSS_RTIA	DSS_CTRL:DBG_ACK_CTL0_ DSS_RTIA
		DSS_RTIB	DSS_CTRL:DBG_ACK_CTL0_ DSS_RTIB
		DSS_RTIC	DSS_CTRL:DBG_ACK_CTL0_ DSS_RTIC
		DSS_SCIA	DSS_CTRL:DBG_ACK_CTL0_ DSS_SCIA
		DSS_WDT	DSS_CTRL:DBG_ACK_CTL0_ DSS_WDT
		DSS_MCRC	DSS_CTRL:DBG_ACK_CTL1_ DSS_MCRC
		DSS_HWA	DSS_CTRL:DBG_ACK_CTL1_ DSS_HWA
RCSS Peripherals	DSP or MSS CR5 based on RCSS_CTRL:: DBG_ACK_CPU_CTRL	RCSS_I2CA	RCSS_CTRL:: DBG_ACK_CTL0_RCSS_I2CA
		RCSS_I2CB	RCSS_CTRL:: DBG_ACK_CTL0_RCSS_I2CB
		RCSS_ECAP	RCSS_CTRL:: DBG_ACK_CTL0_RCSS_ECAP

Copyright © 2025 Texas Instruments Incorporated

Revision History

NOTE: Page numbers for previous revisions may differ from page numbers in the current version.

Changes from May 20, 2024 to April 1, 2025 (from Revision D (May 2024) to Revision E (April 2025)) Page

- Device Overview: Updated DSP max frequency to 550 MHz....10
- External Clock: Added note about RCSS naming....1277
- HWA: Added image relating to data flow path and DMA....1366
- I2C: Added list of I2C instance names....2160
- GPADC: updated external I/O channel instances and link to to useful software information....2410
- CPSW: Removed mentions of checksum in the chapter....2450
- CPSW: Updated features for 1G Operation....2451
- CPSW: Update unsupported features list to include updated items and additional details. Removed sections related to unsupported XGMII, GMII , checksum, and IET features. 2452
- CPSW: removed reference to non-existent section....2472
- CPSW: Add section about the Big Endian Mode....2486
- CPSW: removed duplicate section on Egress Packets....2486
- CPSW: Removed all references to IET....2496
- CPSW: Added sections on Receive Priority Based Flow Control (PFC)....2501
- CPSW: removed duplicate *Software IDLE* section....2506
- CPSW: Updated definition of Rx Top of FIFO Drop....2531
- CPSW: Removed incomplete sentence in *Deferred Tx Frames* 2536
- CPSW: removed incomplete sentences 2538
- CPSW: Added additional registers (0x80-0x8C, 0xB0-0xBC, and 0xE0-0xE4)....2545
- ECAP: Remove sentence about instance counts....3351
- eCAP: Added note about RCSS naming....3352
- ePWM: Updated ePWM naming in text. Added warning about legacy names used in images 3388

Copyright © 2025 Texas Instruments Incorporated

IMPORTANT NOTICE AND DISCLAIMER

TI PROVIDES TECHNICAL AND RELIABILITY DATA (INCLUDING DATA SHEETS), DESIGN RESOURCES (INCLUDING REFERENCE DESIGNS), APPLICATION OR OTHER DESIGN ADVICE, WEB TOOLS, SAFETY INFORMATION, AND OTHER RESOURCES “AS IS” AND WITH ALL FAULTS, AND DISCLAIMS ALL WARRANTIES, EXPRESS AND IMPLIED, INCLUDING WITHOUT LIMITATION ANY IMPLIED WARRANTIES OF MERCHANTABILITY, FITNESS FOR A PARTICULAR PURPOSE OR NON-INFRINGEMENT OF THIRD PARTY INTELLECTUAL PROPERTY RIGHTS.

These resources are intended for skilled developers designing with TI products. You are solely responsible for (1) selecting the appropriate TI products for your application, (2) designing, validating and testing your application, and (3) ensuring your application meets applicable standards, and any other safety, security, regulatory or other requirements.

These resources are subject to change without notice. TI grants you permission to use these resources only for development of an application that uses the TI products described in the resource. Other reproduction and display of these resources is prohibited. No license is granted to any other TI intellectual property right or to any third party intellectual property right. TI disclaims responsibility for, and you will fully indemnify TI and its representatives against, any claims, damages, costs, losses, and liabilities arising out of your use of these resources.

TI’s products are provided subject to TI’s Terms of Sale or other applicable terms available either on ti.com or provided in conjunction with such TI products. TI’s provision of these resources does not expand or otherwise alter TI’s applicable warranties or warranty disclaimers for TI products.

TI objects to and rejects any additional or different terms you may have proposed.

Mailing Address: Texas Instruments, Post Office Box 655303, Dallas, Texas 75265
Copyright © 2025, Texas Instruments Incorporated