## TAPE AND REEL INFORMATION

**REEL DIMENSIONS**

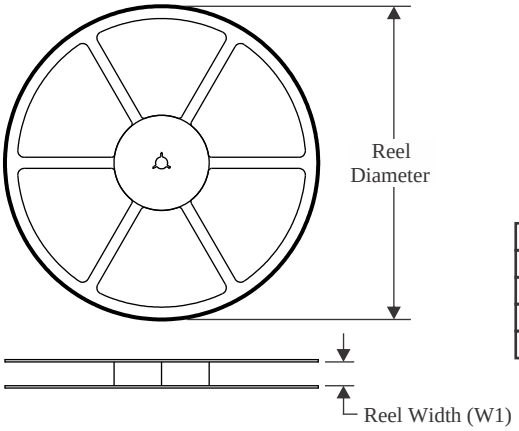


**TAPE DIMENSIONS**

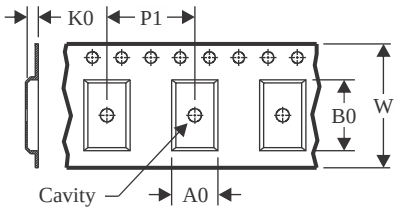


| | |
|---|---|
| A0 | Dimension designed to accommodate the component width |
| B0 | Dimension designed to accommodate the component length |
| K0 | Dimension designed to accommodate the component thickness |
| W | Overall width of the carrier tape |
| P1 | Pitch between successive cavity centers |

**QUADRANT ASSIGNMENTS FOR PIN 1 ORIENTATION IN TAPE**

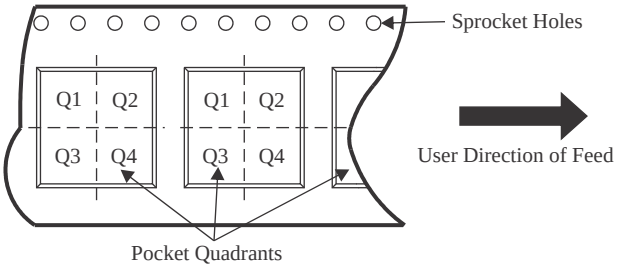


*All dimensions are nominal

| Device | Package Type | Package Drawing | Pins | SPQ | Reel Diameter (mm) | Reel Width W1 (mm) | A0 (mm) | B0 (mm) | K0 (mm) | P1 (mm) | W (mm) | Pin1 Quadrant |
|---|---|---|---|---|---|---|---|---|---|---|---|---|
| ADS131M08IPBSR | TQFP | PBS | 32 | 1000 | 330.0 | 16.4 | 7.2 | 7.2 | 1.5 | 12.0 | 16.0 | Q2 |
| ADS131M08IRSNR | QFN | RSN | 32 | 3000 | 330.0 | 12.4 | 4.25 | 4.25 | 1.15 | 8.0 | 12.0 | Q2 |
| ADS131M08IRSNT | QFN | RSN | 32 | 250 | 180.0 | 12.4 | 4.25 | 4.25 | 1.15 | 8.0 | 12.0 | Q2 |

TAPE AND REEL BOX DIMENSIONS

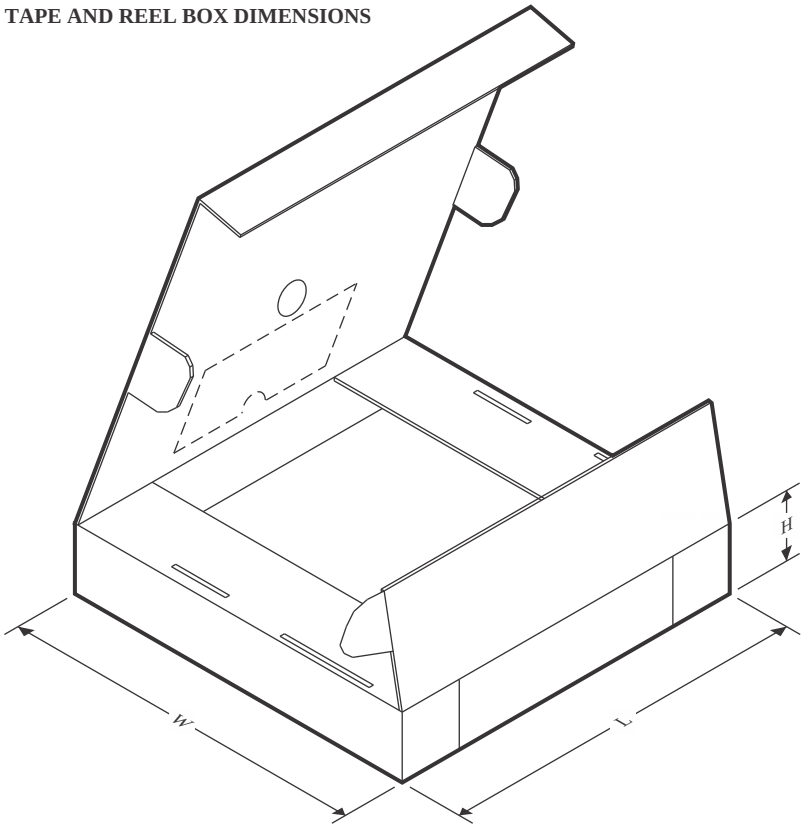


*All dimensions are nominal

| Device | Package Type | Package Drawing | Pins | SPQ | Length (mm) | Width (mm) | Height (mm) |
|---|---|---|---|---|---|---|---|
| ADS131M08IPBSR | TQFP | PBS | 32 | 1000 | 367.0 | 367.0 | 38.0 |
| ADS131M08IRSNR | QFN | RSN | 32 | 3000 | 367.0 | 367.0 | 35.0 |
| ADS131M08IRSNT | QFN | RSN | 32 | 250 | 210.0 | 185.0 | 35.0 |

## TRAY

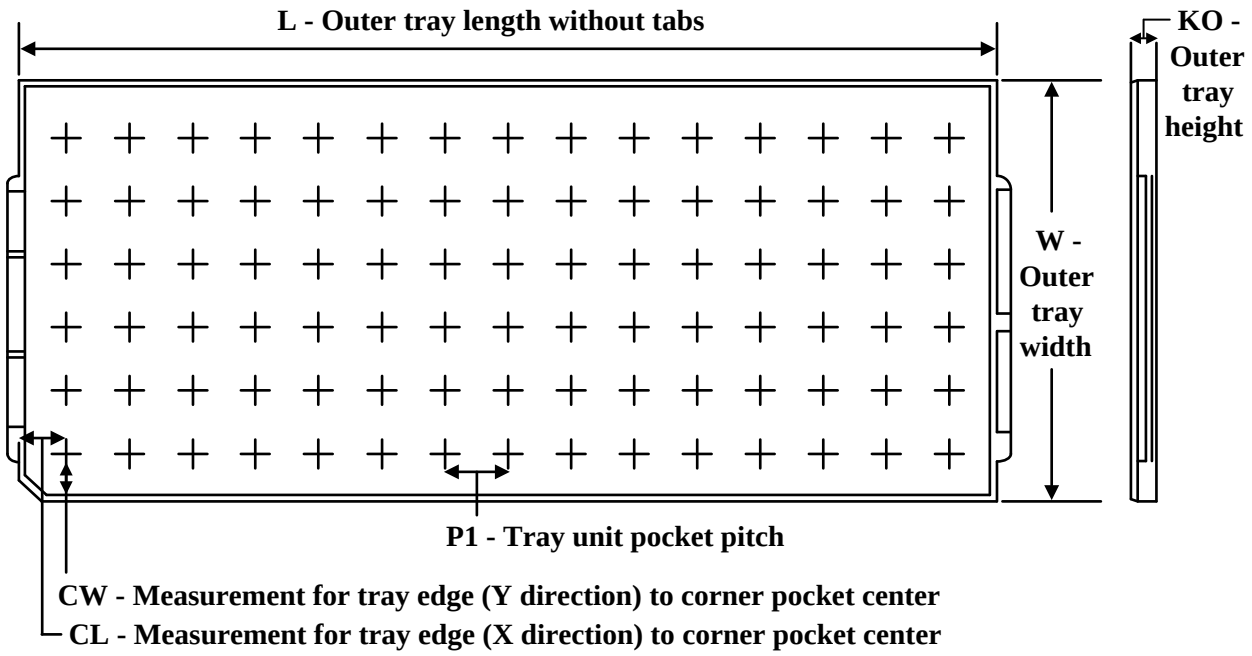


Chamfer on Tray corner indicates Pin 1 orientation of packed units.

*All dimensions are nominal

| Device | Package Name | Package Type | Pins | SPQ | Unit array matrix | Max temperature (°C) | L (mm) | W (mm) | K0 (µm) | P1 (mm) | CL (mm) | CW (mm) |
|---|---|---|---|---|---|---|---|---|---|---|---|---|
| ADS131M08IPBS | PBS | TQFP | 32 | 250 | 10 x 25 | 150 | 315 | 135.9 | 7620 | 12.2 | 11.5 | 11.45 |