TAPE AND REEL INFORMATION

REEL DIMENSIONS

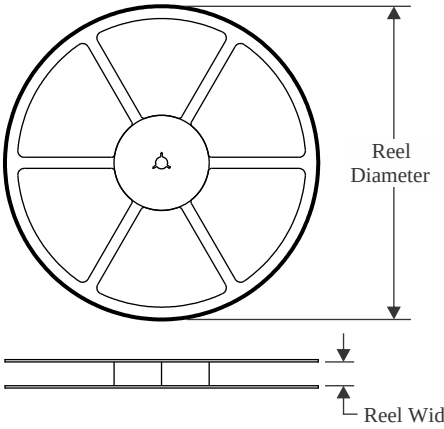

TAPE DIMENSIONS

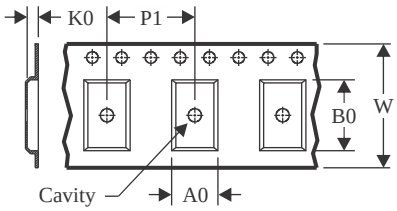

A0	Dimension designed to accommodate the component width
B0	Dimension designed to accommodate the component length
K0	Dimension designed to accommodate the component thickness
W	Overall width of the carrier tape
P1	Pitch between successive cavity centers

QUADRANT ASSIGNMENTS FOR PIN 1 ORIENTATION IN TAPE

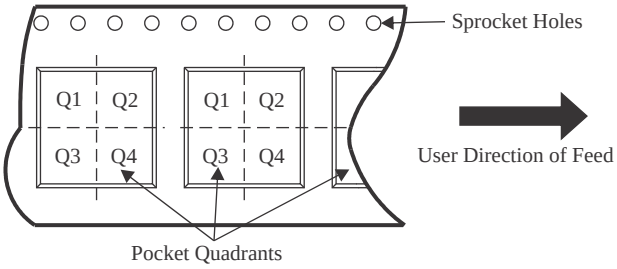

*All dimensions are nominal

Device	Package Type	Package Drawing	Pins	SPQ	Reel Diameter (mm)	Reel Width W1 (mm)	A0 (mm)	B0 (mm)	K0 (mm)	P1 (mm)	W (mm)	Pin1 Quadrant
CC3220RM2ARGKR	VQFN	RGK	64	2500	330.0	16.4	9.3	9.3	1.1	12.0	16.0	Q2
CC3220RM2ARGKT	VQFN	RGK	64	250	180.0	16.4	9.3	9.3	1.1	12.0	16.0	Q2
CC3220SF12ARGKR	VQFN	RGK	64	2500	330.0	16.4	9.3	9.3	1.1	12.0	16.0	Q2
CC3220SF12ARGKT	VQFN	RGK	64	250	180.0	16.4	9.3	9.3	1.1	12.0	16.0	Q2
CC3220SM2ARGKR	VQFN	RGK	64	2500	330.0	16.4	9.3	9.3	1.1	12.0	16.0	Q2
CC3220SM2ARGKT	VQFN	RGK	64	250	180.0	16.4	9.3	9.3	1.1	12.0	16.0	Q2

TAPE AND REEL BOX DIMENSIONS

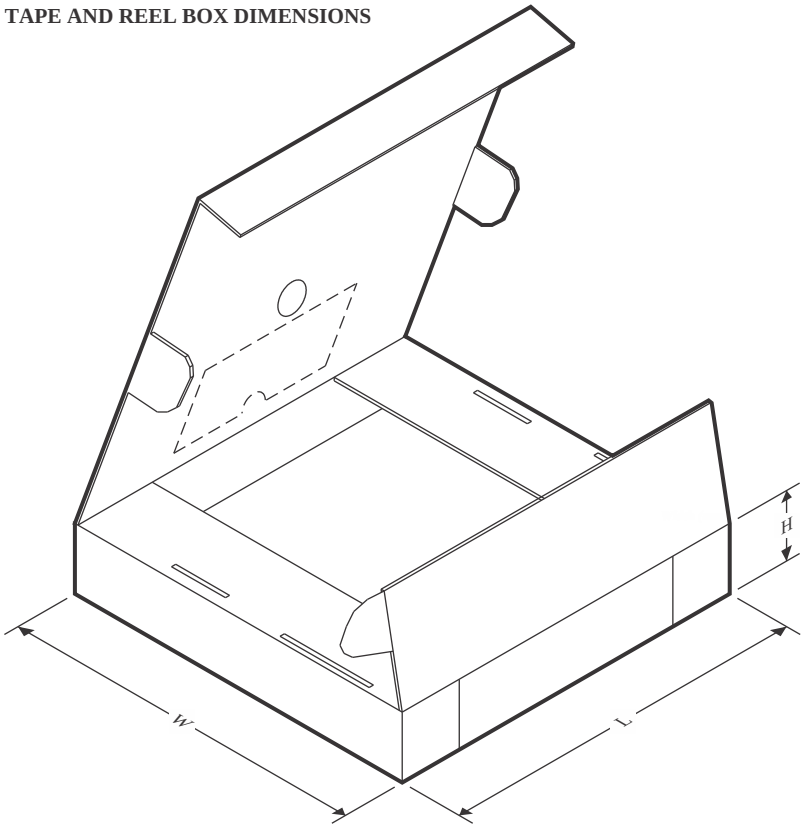

*All dimensions are nominal

Device	Package Type	Package Drawing	Pins	SPQ	Length (mm)	Width (mm)	Height (mm)
CC3220RM2ARGKR	VQFN	RGK	64	2500	367.0	367.0	38.0
CC3220RM2ARGKT	VQFN	RGK	64	250	210.0	185.0	35.0
CC3220SF12ARGKR	VQFN	RGK	64	2500	367.0	367.0	38.0
CC3220SF12ARGKT	VQFN	RGK	64	250	210.0	185.0	35.0
CC3220SM2ARGKR	VQFN	RGK	64	2500	367.0	367.0	38.0
CC3220SM2ARGKT	VQFN	RGK	64	250	210.0	185.0	35.0