TAPE AND REEL INFORMATION

REEL DIMENSIONS

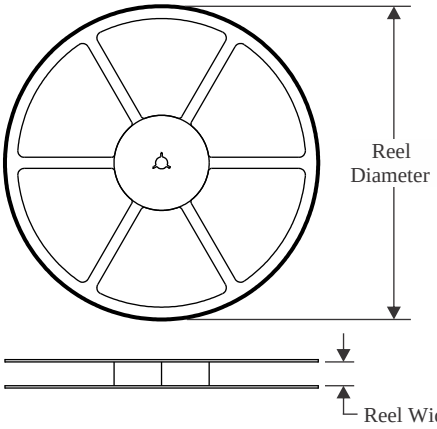

TAPE DIMENSIONS

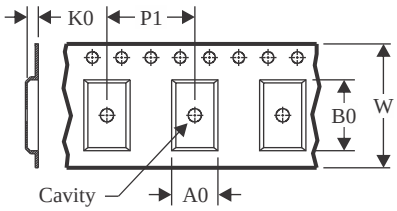

A0	Dimension designed to accommodate the component width
B0	Dimension designed to accommodate the component length
K0	Dimension designed to accommodate the component thickness
W	Overall width of the carrier tape
P1	Pitch between successive cavity centers

QUADRANT ASSIGNMENTS FOR PIN 1 ORIENTATION IN TAPE

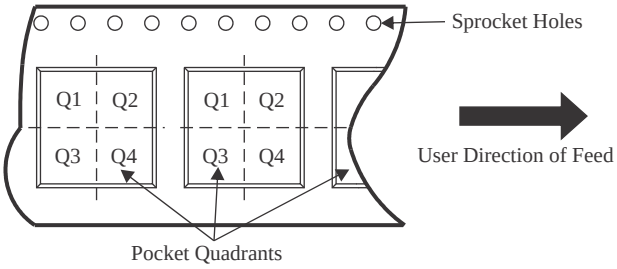

*All dimensions are nominal

Device	Package Type	Package Drawing	Pins	SPQ	Reel Diameter (mm)	Reel Width W1 (mm)	A0 (mm)	B0 (mm)	K0 (mm)	P1 (mm)	W (mm)	Pin1 Quadrant
ISO6760DWR	SOIC	DW	16	2000	330.0	16.4	10.75	10.7	2.7	12.0	16.0	Q1
ISO6760DWR	SOIC	DW	16	2000	330.0	16.4	10.75	10.7	2.7	12.0	16.0	Q1
ISO6760DWR	SOIC	DW	16	2000	330.0	16.4	10.75	10.7	2.7	12.0	16.0	Q1
ISO6760FDWR	SOIC	DW	16	2000	330.0	16.4	10.75	10.7	2.7	12.0	16.0	Q1
ISO6760FDWR	SOIC	DW	16	2000	330.0	16.4	10.75	10.7	2.7	12.0	16.0	Q1
ISO6760FDWR	SOIC	DW	16	2000	330.0	16.4	10.75	10.7	2.7	12.0	16.0	Q1
ISO6761DWR	SOIC	DW	16	2000	330.0	16.4	10.75	10.7	2.7	12.0	16.0	Q1
ISO6761DWR	SOIC	DW	16	2000	330.0	16.4	10.75	10.7	2.7	12.0	16.0	Q1
ISO6761FDWR	SOIC	DW	16	2000	330.0	16.4	10.75	10.7	2.7	12.0	16.0	Q1
ISO6761FDWR	SOIC	DW	16	2000	330.0	16.4	10.75	10.7	2.7	12.0	16.0	Q1
ISO6762DWR	SOIC	DW	16	2000	330.0	16.4	10.75	10.7	2.7	12.0	16.0	Q1
ISO6762DWR	SOIC	DW	16	2000	330.0	16.4	10.75	10.7	2.7	12.0	16.0	Q1
ISO6762FDWR	SOIC	DW	16	2000	330.0	16.4	10.75	10.7	2.7	12.0	16.0	Q1
ISO6762FDWR	SOIC	DW	16	2000	330.0	16.4	10.75	10.7	2.7	12.0	16.0	Q1
ISO6763DWR	SOIC	DW	16	2000	330.0	16.4	10.75	10.7	2.7	12.0	16.0	Q1
ISO6763DWR	SOIC	DW	16	2000	330.0	16.4	10.75	10.7	2.7	12.0	16.0	Q1

Device	Package Type	Package Drawing	Pins	SPQ	Reel Diameter (mm)	Reel Width W1 (mm)	A0 (mm)	B0 (mm)	K0 (mm)	P1 (mm)	W (mm)	Pin1 Quadrant
ISO6763FDWR	SOIC	DW	16	2000	330.0	16.4	10.75	10.7	2.7	12.0	16.0	Q1
ISO6763FDWR	SOIC	DW	16	2000	330.0	16.4	10.75	10.7	2.7	12.0	16.0	Q1

TAPE AND REEL BOX DIMENSIONS

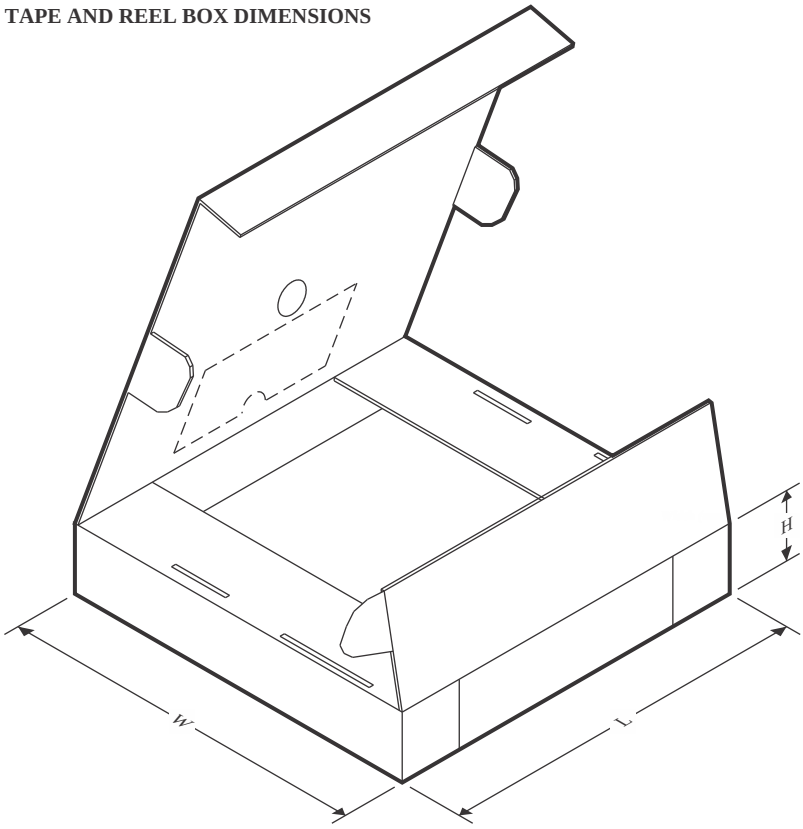

*All dimensions are nominal

Device	Package Type	Package Drawing	Pins	SPQ	Length (mm)	Width (mm)	Height (mm)
ISO6760DWR	SOIC	DW	16	2000	353.0	353.0	32.0
ISO6760DWR	SOIC	DW	16	2000	356.0	356.0	35.0
ISO6760DWR	SOIC	DW	16	2000	353.0	353.0	32.0
ISO6760FDWR	SOIC	DW	16	2000	353.0	353.0	32.0
ISO6760FDWR	SOIC	DW	16	2000	356.0	356.0	35.0
ISO6760FDWR	SOIC	DW	16	2000	353.0	353.0	32.0
ISO6761DWR	SOIC	DW	16	2000	353.0	353.0	32.0
ISO6761DWR	SOIC	DW	16	2000	356.0	356.0	35.0
ISO6761FDWR	SOIC	DW	16	2000	353.0	353.0	32.0
ISO6761FDWR	SOIC	DW	16	2000	356.0	356.0	35.0
ISO6762DWR	SOIC	DW	16	2000	353.0	353.0	32.0
ISO6762DWR	SOIC	DW	16	2000	356.0	356.0	35.0
ISO6762FDWR	SOIC	DW	16	2000	367.0	367.0	45.0
ISO6762FDWR	SOIC	DW	16	2000	353.0	353.0	32.0
ISO6763DWR	SOIC	DW	16	2000	353.0	353.0	32.0
ISO6763DWR	SOIC	DW	16	2000	356.0	356.0	35.0
ISO6763FDWR	SOIC	DW	16	2000	356.0	356.0	35.0
ISO6763FDWR	SOIC	DW	16	2000	353.0	353.0	32.0