TAPE AND REEL INFORMATION

REEL DIMENSIONS

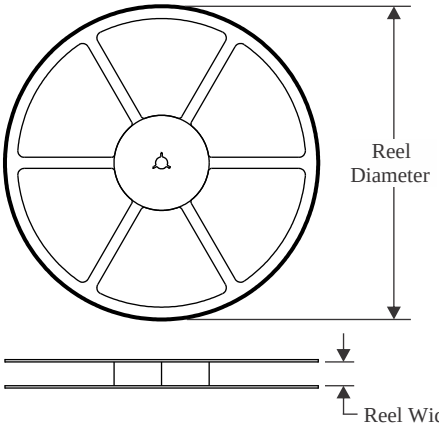

TAPE DIMENSIONS

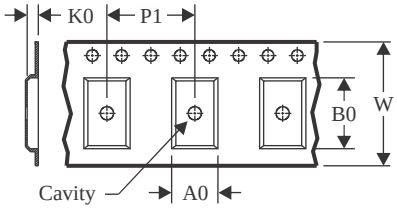

A0	Dimension designed to accommodate the component width
B0	Dimension designed to accommodate the component length
K0	Dimension designed to accommodate the component thickness
W	Overall width of the carrier tape
P1	Pitch between successive cavity centers

QUADRANT ASSIGNMENTS FOR PIN 1 ORIENTATION IN TAPE

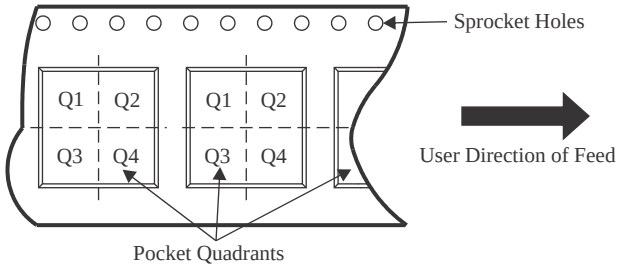

*All dimensions are nominal

Device	Package Type	Package Drawing	Pins	SPQ	Reel Diameter (mm)	Reel Width W1 (mm)	A0 (mm)	B0 (mm)	K0 (mm)	P1 (mm)	W (mm)	Pin1 Quadrant
ISO7842DWR	SOIC	DW	16	2000	330.0	16.4	10.75	10.7	2.7	12.0	16.0	Q1
ISO7842DWWR	SOIC	DWW	16	1000	330.0	24.4	18.0	10.0	3.0	20.0	24.0	Q1
ISO7842FDWR	SOIC	DW	16	2000	330.0	16.4	10.75	10.7	2.7	12.0	16.0	Q1
ISO7842FDWWR	SOIC	DWW	16	1000	330.0	24.4	18.0	10.0	3.0	20.0	24.0	Q1

TAPE AND REEL BOX DIMENSIONS

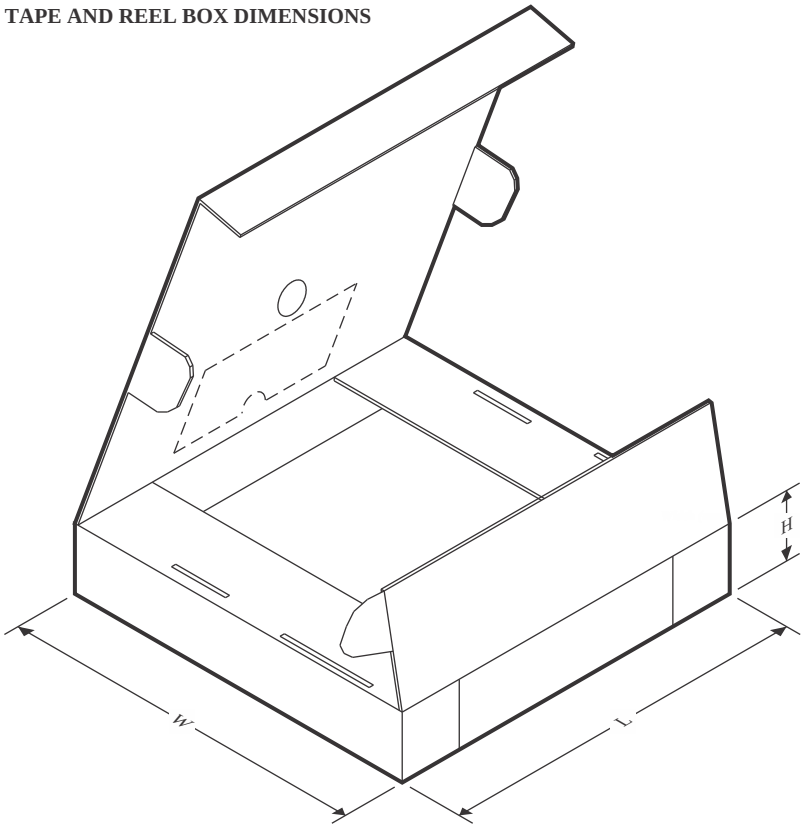

*All dimensions are nominal

Device	Package Type	Package Drawing	Pins	SPQ	Length (mm)	Width (mm)	Height (mm)
ISO7842DWR	SOIC	DW	16	2000	350.0	350.0	43.0
ISO7842DWWR	SOIC	DWW	16	1000	350.0	350.0	43.0
ISO7842FDWR	SOIC	DW	16	2000	350.0	350.0	43.0
ISO7842FDWWR	SOIC	DWW	16	1000	350.0	350.0	43.0

TUBE

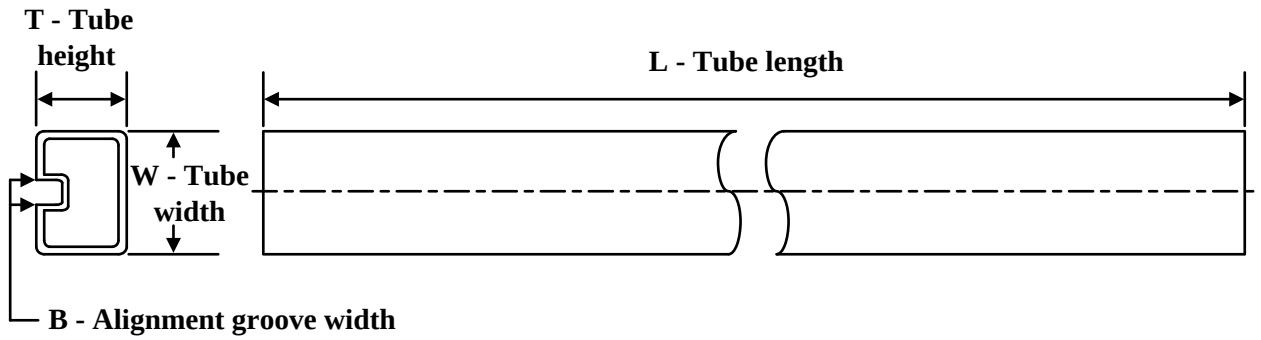

*All dimensions are nominal

Device	Package Name	Package Type	Pins	SPQ	L (mm)	W (mm)	T (µm)	B (mm)
ISO7842DW	DW	SOIC	16	40	506.98	12.7	4826	6.6
ISO7842DWW	DWW	SOIC	16	45	507	20	5000	9
ISO7842FDW	DW	SOIC	16	40	506.98	12.7	4826	6.6
ISO7842FDWW	DWW	SOIC	16	45	507	20	5000	9