TAPE AND REEL INFORMATION

REEL DIMENSIONS

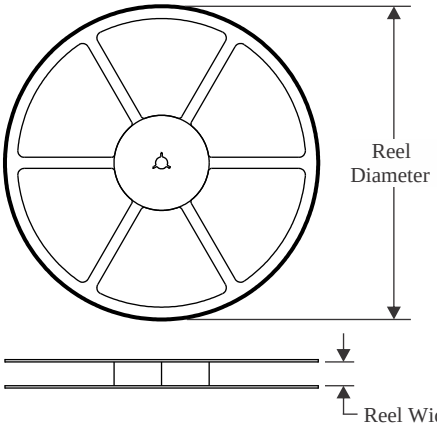

TAPE DIMENSIONS

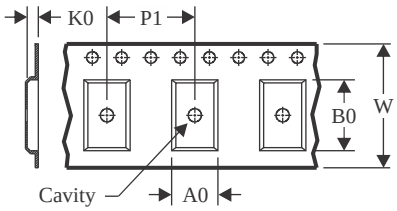

A0	Dimension designed to accommodate the component width
B0	Dimension designed to accommodate the component length
K0	Dimension designed to accommodate the component thickness
W	Overall width of the carrier tape
P1	Pitch between successive cavity centers

QUADRANT ASSIGNMENTS FOR PIN 1 ORIENTATION IN TAPE

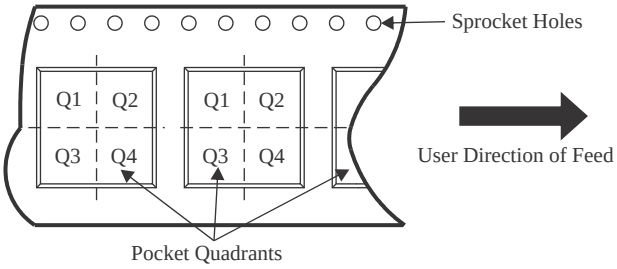

*All dimensions are nominal

Device	Package Type	Package Drawing	Pins	SPQ	Reel Diameter (mm)	Reel Width W1 (mm)	A0 (mm)	B0 (mm)	K0 (mm)	P1 (mm)	W (mm)	Pin1 Quadrant
LMV611MF/NOPB	SOT-23	DBV	5	1000	178.0	8.4	3.2	3.2	1.4	4.0	8.0	Q3
LMV611MFX/NOPB	SOT-23	DBV	5	3000	178.0	8.4	3.2	3.2	1.4	4.0	8.0	Q3
LMV611MG/NOPB	SC70	DCK	5	1000	178.0	8.4	2.25	2.45	1.2	4.0	8.0	Q3
LMV611MGX/NOPB	SC70	DCK	5	3000	178.0	8.4	2.25	2.45	1.2	4.0	8.0	Q3
LMV612MAX/NOPB	SOIC	D	8	2500	330.0	12.4	6.5	5.4	2.0	8.0	12.0	Q1
LMV612MM/NOPB	VSSOP	DGK	8	1000	178.0	12.4	5.3	3.4	1.4	8.0	12.0	Q1
LMV612MMX/NOPB	VSSOP	DGK	8	3500	330.0	12.4	5.3	3.4	1.4	8.0	12.0	Q1
LMV614MAX/NOPB	SOIC	D	14	2500	330.0	16.4	6.5	9.35	2.3	8.0	16.0	Q1
LMV614MTX/NOPB	TSSOP	PW	14	2500	330.0	12.4	6.95	5.6	1.6	8.0	12.0	Q1

TAPE AND REEL BOX DIMENSIONS

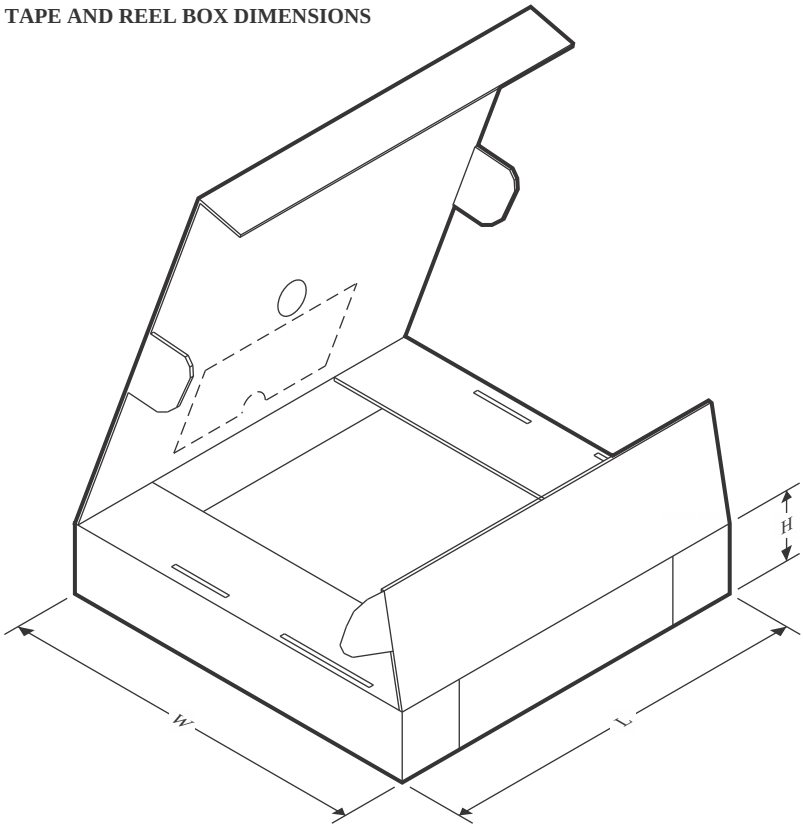

*All dimensions are nominal

Device	Package Type	Package Drawing	Pins	SPQ	Length (mm)	Width (mm)	Height (mm)
LMV611MF/NOPB	SOT-23	DBV	5	1000	208.0	191.0	35.0
LMV611MFX/NOPB	SOT-23	DBV	5	3000	208.0	191.0	35.0
LMV611MG/NOPB	SC70	DCK	5	1000	208.0	191.0	35.0
LMV611MGX/NOPB	SC70	DCK	5	3000	208.0	191.0	35.0
LMV612MAX/NOPB	SOIC	D	8	2500	367.0	367.0	35.0
LMV612MM/NOPB	VSSOP	DGK	8	1000	208.0	191.0	35.0
LMV612MMX/NOPB	VSSOP	DGK	8	3500	367.0	367.0	35.0
LMV614MAX/NOPB	SOIC	D	14	2500	367.0	367.0	35.0
LMV614MTX/NOPB	TSSOP	PW	14	2500	367.0	367.0	35.0

TUBE

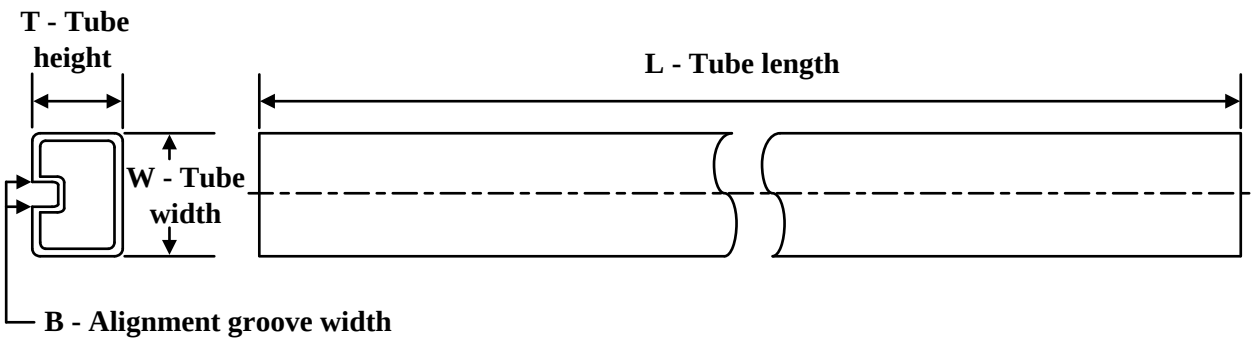

*All dimensions are nominal

Device	Package Name	Package Type	Pins	SPQ	L (mm)	W (mm)	T (µm)	B (mm)
LMV612MA/NOPB	D	SOIC	8	95	495	8	4064	3.05
LMV614MA/NOPB	D	SOIC	14	55	495	8	4064	3.05
LMV614MT/NOPB	PW	TSSOP	14	94	495	8	2514.6	4.06
LMV614MT/NOPB	PW	TSSOP	14	94	530	10.2	3600	3.5