TAPE AND REEL INFORMATION

REEL DIMENSIONS

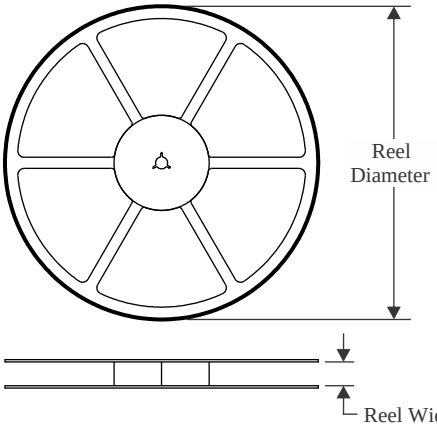

TAPE DIMENSIONS

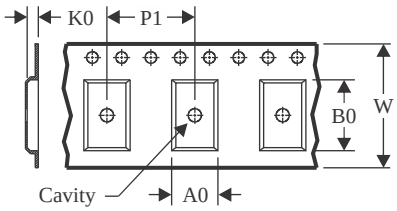

A0	Dimension designed to accommodate the component width
B0	Dimension designed to accommodate the component length
K0	Dimension designed to accommodate the component thickness
W	Overall width of the carrier tape
P1	Pitch between successive cavity centers

QUADRANT ASSIGNMENTS FOR PIN 1 ORIENTATION IN TAPE

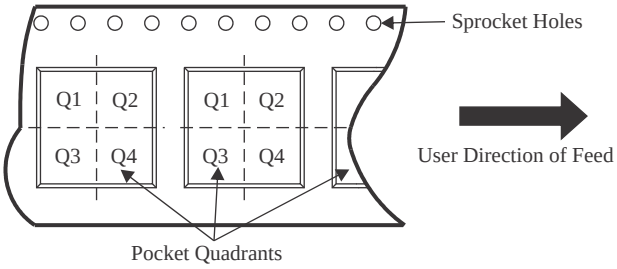

*All dimensions are nominal

Device	Package Type	Package Drawing	Pins	SPQ	Reel Diameter (mm)	Reel Width W1 (mm)	A0 (mm)	B0 (mm)	K0 (mm)	P1 (mm)	W (mm)	Pin1 Quadrant
LMV712LD/NOPB	WSON	NGY	10	1000	178.0	12.4	3.3	3.3	1.0	8.0	12.0	Q1
LMV712LDX/NOPB	WSON	NGY	10	4500	330.0	12.4	3.3	3.3	1.0	8.0	12.0	Q1
LMV712MM	VSSOP	DGS	10	1000	178.0	12.4	5.3	3.4	1.4	8.0	12.0	Q1
LMV712MM/NOPB	VSSOP	DGS	10	1000	178.0	12.4	5.3	3.4	1.4	8.0	12.0	Q1
LMV712MMX/NOPB	VSSOP	DGS	10	3500	330.0	12.4	5.3	3.4	1.4	8.0	12.0	Q1
LMV712Q1MM/NOPB	VSSOP	DGS	10	1000	178.0	12.4	5.3	3.4	1.4	8.0	12.0	Q1
LMV712Q1MMX/NOPB	VSSOP	DGS	10	3500	330.0	12.4	5.3	3.4	1.4	8.0	12.0	Q1
LMV712TL/NOPB	DSBGA	YPA	10	250	178.0	8.4	1.68	2.13	0.76	4.0	8.0	Q1
LMV712TLX/NOPB	DSBGA	YPA	10	3000	178.0	8.4	1.68	2.13	0.76	4.0	8.0	Q1

TAPE AND REEL BOX DIMENSIONS

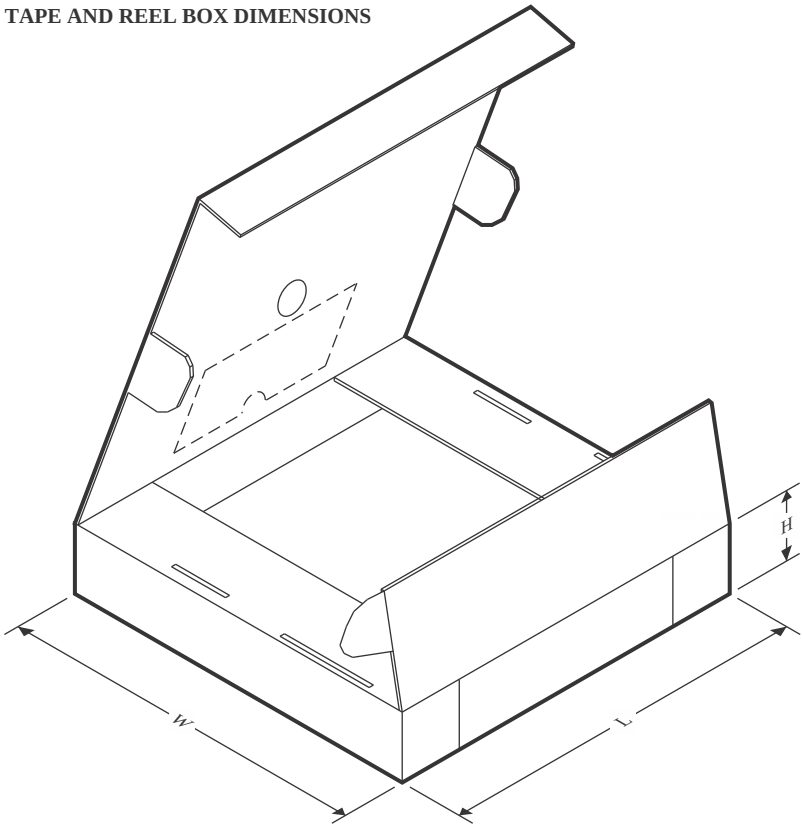

*All dimensions are nominal

Device	Package Type	Package Drawing	Pins	SPQ	Length (mm)	Width (mm)	Height (mm)
LMV712LD/NOPB	WSON	NGY	10	1000	208.0	191.0	35.0
LMV712LDX/NOPB	WSON	NGY	10	4500	356.0	356.0	36.0
LMV712MM	VSSOP	DGS	10	1000	208.0	191.0	35.0
LMV712MM/NOPB	VSSOP	DGS	10	1000	208.0	191.0	35.0
LMV712MMX/NOPB	VSSOP	DGS	10	3500	367.0	367.0	35.0
LMV712Q1MM/NOPB	VSSOP	DGS	10	1000	208.0	191.0	35.0
LMV712Q1MMX/NOPB	VSSOP	DGS	10	3500	367.0	367.0	35.0
LMV712TL/NOPB	DSBGA	YPA	10	250	208.0	191.0	35.0
LMV712TLX/NOPB	DSBGA	YPA	10	3000	208.0	191.0	35.0