TAPE AND REEL INFORMATION

REEL DIMENSIONS

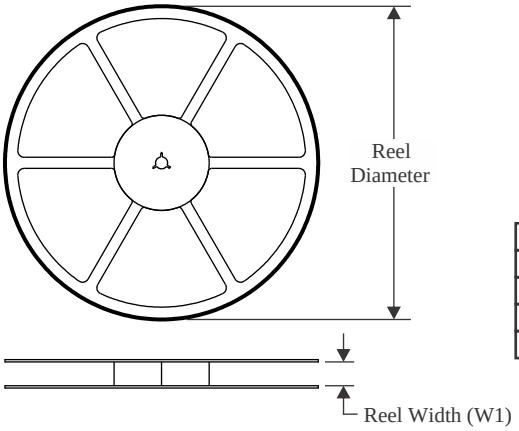

TAPE DIMENSIONS

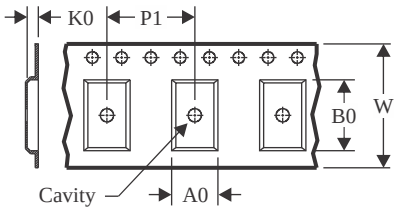

A0	Dimension designed to accommodate the component width
B0	Dimension designed to accommodate the component length
K0	Dimension designed to accommodate the component thickness
W	Overall width of the carrier tape
P1	Pitch between successive cavity centers

QUADRANT ASSIGNMENTS FOR PIN 1 ORIENTATION IN TAPE

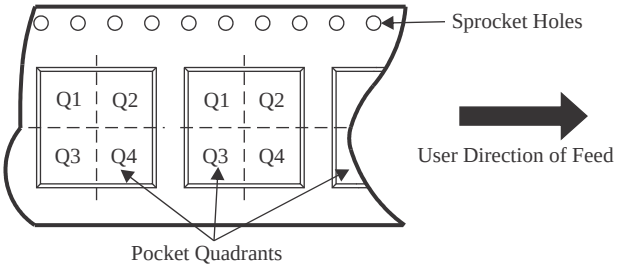

*All dimensions are nominal

Device	Package Type	Package Drawing	Pins	SPQ	Reel Diameter (mm)	Reel Width W1 (mm)	A0 (mm)	B0 (mm)	K0 (mm)	P1 (mm)	W (mm)	Pin1 Quadrant
MC3303DR	SOIC	D	14	2500	330.0	12.4	6.4	5.2	2.1	8.0	12.0	Q1
MC3303PWR	TSSOP	PW	14	2000	330.0	12.4	6.9	5.6	1.6	8.0	12.0	Q1
MC3303PWR	TSSOP	PW	14	2000	330.0	12.4	6.9	5.6	1.6	8.0	12.0	Q1
MC3403DR	SOIC	D	14	2500	330.0	12.4	6.4	5.2	2.1	8.0	12.0	Q1
MC3403DR	SOIC	D	14	2500	330.0	16.4	6.5	9.0	2.1	8.0	16.0	Q1
MC3403NSR	SOP	NS	14	2000	330.0	16.4	8.1	10.4	2.5	12.0	16.0	Q1

TAPE AND REEL BOX DIMENSIONS

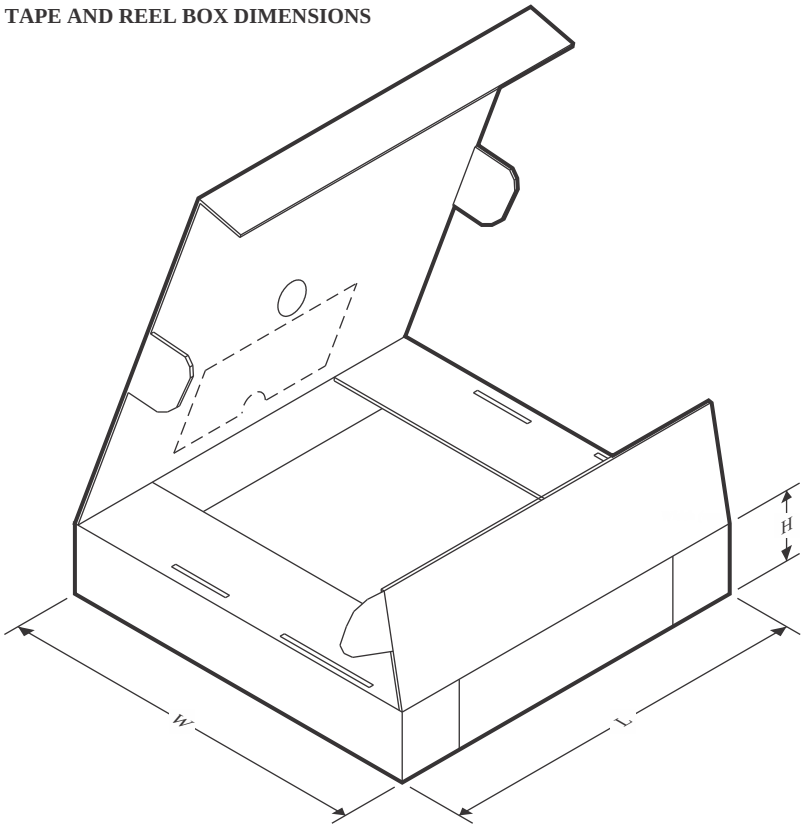

*All dimensions are nominal

Device	Package Type	Package Drawing	Pins	SPQ	Length (mm)	Width (mm)	Height (mm)
MC3303DR	SOIC	D	14	2500	340.5	336.1	25.0
MC3303PWR	TSSOP	PW	14	2000	353.0	353.0	32.0
MC3303PWR	TSSOP	PW	14	2000	353.0	353.0	32.0
MC3403DR	SOIC	D	14	2500	340.5	336.1	25.0
MC3403DR	SOIC	D	14	2500	353.0	353.0	32.0
MC3403NSR	SOP	NS	14	2000	353.0	353.0	32.0

TUBE

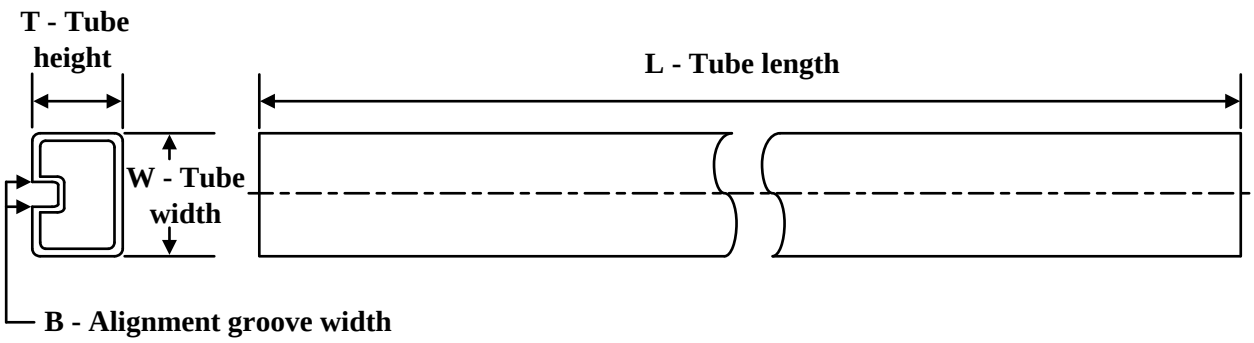

*All dimensions are nominal

Device	Package Name	Package Type	Pins	SPQ	L (mm)	W (mm)	T (µm)	B (mm)
MC3303N	N	PDIP	14	25	506	13.97	11230	4.32
MC3303N	N	PDIP	14	25	506	13.97	11230	4.32
MC3303N.A	N	PDIP	14	25	506	13.97	11230	4.32
MC3303N.A	N	PDIP	14	25	506	13.97	11230	4.32
MC3403N	N	PDIP	14	25	506	13.97	11230	4.32
MC3403N	N	PDIP	14	25	506	13.97	11230	4.32
MC3403N.A	N	PDIP	14	25	506	13.97	11230	4.32
MC3403N.A	N	PDIP	14	25	506	13.97	11230	4.32