TAPE AND REEL INFORMATION

REEL DIMENSIONS

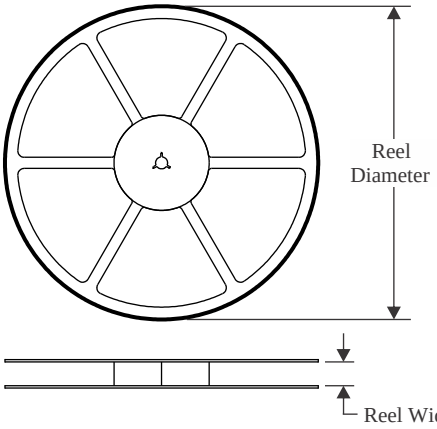

TAPE DIMENSIONS

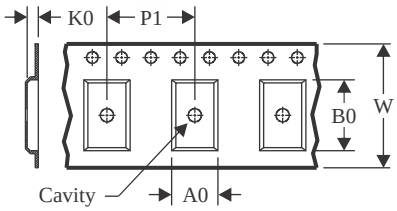

A0	Dimension designed to accommodate the component width
B0	Dimension designed to accommodate the component length
K0	Dimension designed to accommodate the component thickness
W	Overall width of the carrier tape
P1	Pitch between successive cavity centers

QUADRANT ASSIGNMENTS FOR PIN 1 ORIENTATION IN TAPE

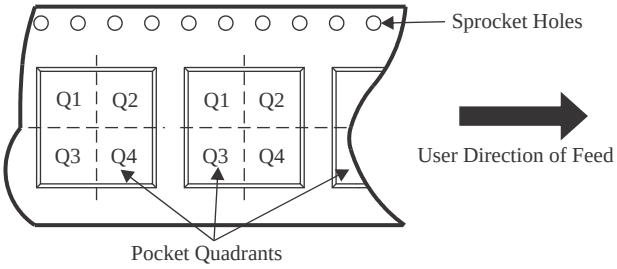

*All dimensions are nominal

Device	Package Type	Package Drawing	Pins	SPQ	Reel Diameter (mm)	Reel Width W1 (mm)	A0 (mm)	B0 (mm)	K0 (mm)	P1 (mm)	W (mm)	Pin1 Quadrant
OPA2354AIDDAR	SO PowerPAD	DDA	8	2500	330.0	12.4	6.4	5.2	2.1	8.0	12.0	Q1
OPA2354AIDGKR	VSSOP	DGK	8	2500	330.0	12.4	5.3	3.4	1.4	8.0	12.0	Q1
OPA2354AIDGKT	VSSOP	DGK	8	250	330.0	12.4	5.3	3.4	1.4	8.0	12.0	Q1
OPA2354AIDGKTG4	VSSOP	DGK	8	250	330.0	12.4	5.3	3.4	1.4	8.0	12.0	Q1
OPA354AIDBVR	SOT-23	DBV	5	3000	178.0	9.0	3.23	3.17	1.37	4.0	8.0	Q3
OPA354AIDBVT	SOT-23	DBV	5	250	178.0	9.0	3.3	3.2	1.4	4.0	8.0	Q3
OPA354AIDDAR	SO PowerPAD	DDA	8	2500	330.0	12.4	6.4	5.2	2.1	8.0	12.0	Q1
OPA4354AIDR	SOIC	D	14	2500	330.0	16.4	6.5	9.0	2.1	8.0	16.0	Q1
OPA4354AIPWR	TSSOP	PW	14	2500	330.0	12.4	6.9	5.6	1.6	8.0	12.0	Q1
OPA4354AIPWT	TSSOP	PW	14	250	180.0	12.4	6.9	5.6	1.6	8.0	12.0	Q1

TAPE AND REEL BOX DIMENSIONS

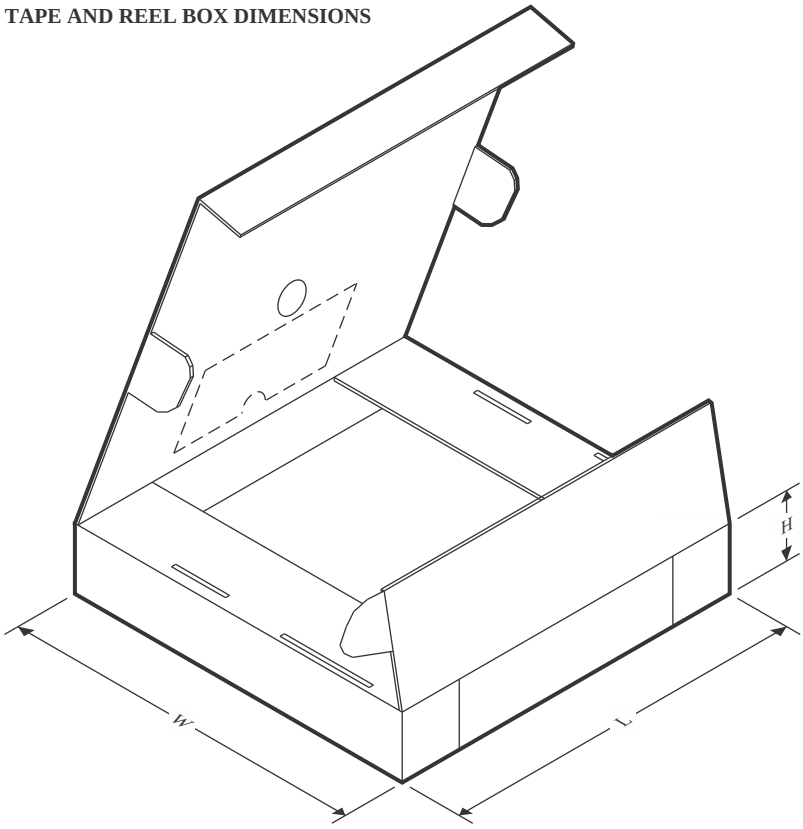

*All dimensions are nominal

Device	Package Type	Package Drawing	Pins	SPQ	Length (mm)	Width (mm)	Height (mm)
OPA2354AIDDAR	SO PowerPAD	DDA	8	2500	356.0	356.0	35.0
OPA2354AIDGKR	VSSOP	DGK	8	2500	366.0	364.0	50.0
OPA2354AIDGKT	VSSOP	DGK	8	250	366.0	364.0	50.0
OPA2354AIDGKTG4	VSSOP	DGK	8	250	366.0	364.0	50.0
OPA354AIDBVR	SOT-23	DBV	5	3000	180.0	180.0	18.0
OPA354AIDBVT	SOT-23	DBV	5	250	180.0	180.0	18.0
OPA354AIDDAR	SO PowerPAD	DDA	8	2500	356.0	356.0	35.0
OPA4354AIDR	SOIC	D	14	2500	356.0	356.0	35.0
OPA4354AIPWR	TSSOP	PW	14	2500	356.0	356.0	35.0
OPA4354AIPWT	TSSOP	PW	14	250	210.0	185.0	35.0

TUBE

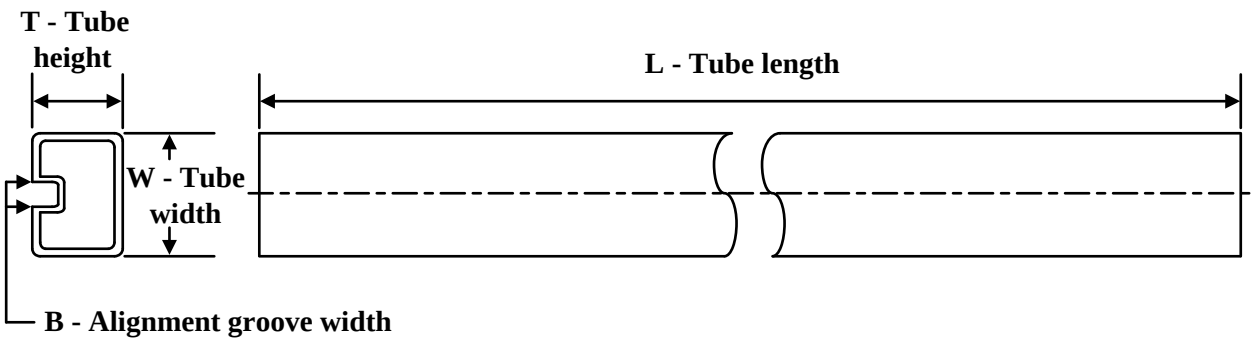

*All dimensions are nominal

Device	Package Name	Package Type	Pins	SPQ	L (mm)	W (mm)	T (µm)	B (mm)
OPA2354AIDDA	DDA	HSOIC	8	75	506.6	8	3940	4.32
OPA2354AIDDAG3	DDA	HSOIC	8	75	506.6	8	3940	4.32
OPA354AIDDA	DDA	HSOIC	8	75	506.6	8	3940	4.32
OPA354AIDDAG3	DDA	HSOIC	8	75	506.6	8	3940	4.32
OPA4354AID	D	SOIC	14	50	506.6	8	3940	4.32