TAPE AND REEL INFORMATION

REEL DIMENSIONS

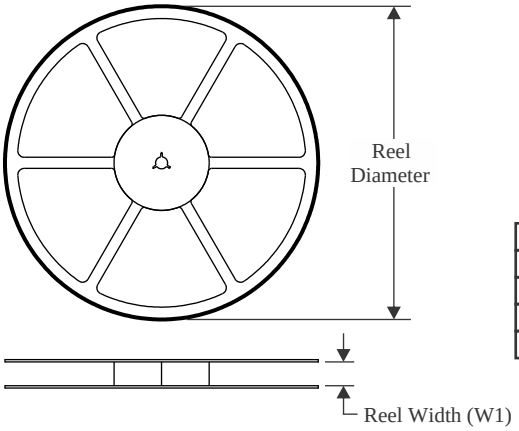

TAPE DIMENSIONS

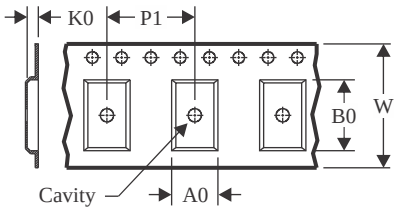

A0	Dimension designed to accommodate the component width
B0	Dimension designed to accommodate the component length
K0	Dimension designed to accommodate the component thickness
W	Overall width of the carrier tape
P1	Pitch between successive cavity centers

QUADRANT ASSIGNMENTS FOR PIN 1 ORIENTATION IN TAPE

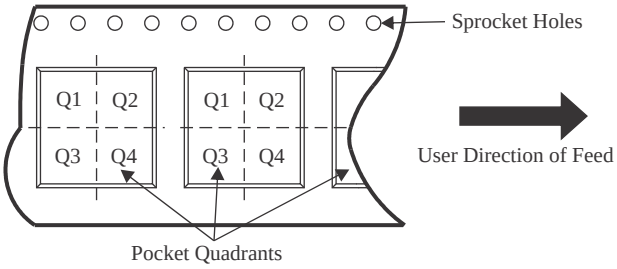

*All dimensions are nominal

Device	Package Type	Package Drawing	Pins	SPQ	Reel Diameter (mm)	Reel Width W1 (mm)	A0 (mm)	B0 (mm)	K0 (mm)	P1 (mm)	W (mm)	Pin1 Quadrant
OPA2365AIDR	SOIC	D	8	2500	330.0	12.4	6.4	5.2	2.1	8.0	12.0	Q1
OPA365AIDBVR	SOT-23	DBV	5	3000	178.0	9.0	3.3	3.2	1.4	4.0	8.0	Q3
OPA365AIDBVT	SOT-23	DBV	5	250	178.0	9.0	3.3	3.2	1.4	4.0	8.0	Q3
OPA365AIDR	SOIC	D	8	2500	330.0	12.4	6.4	5.2	2.1	8.0	12.0	Q1

TAPE AND REEL BOX DIMENSIONS

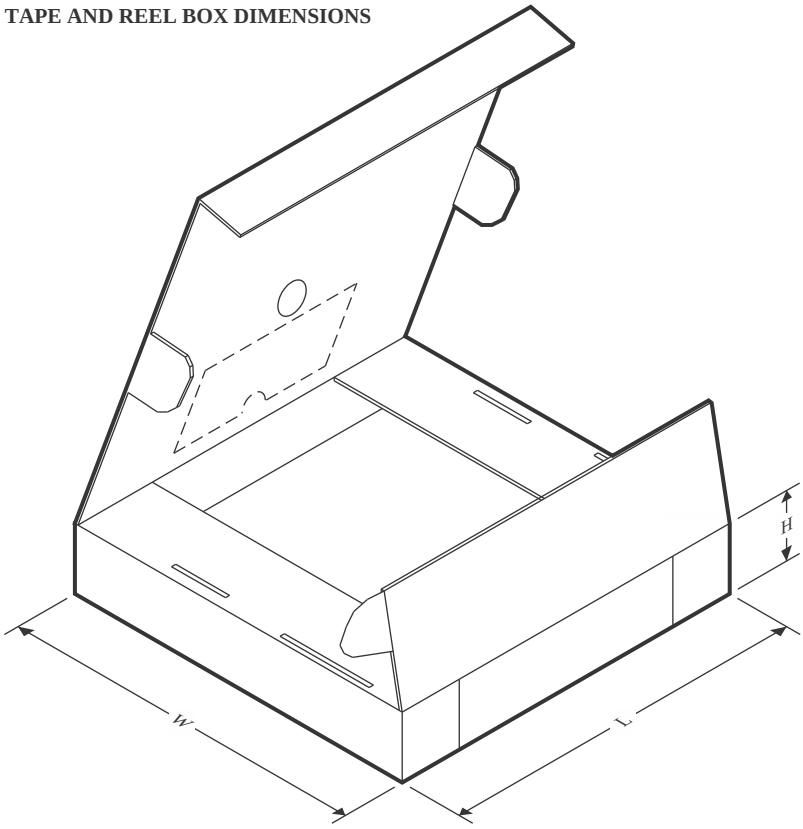

*All dimensions are nominal

Device	Package Type	Package Drawing	Pins	SPQ	Length (mm)	Width (mm)	Height (mm)
OPA2365AIDR	SOIC	D	8	2500	356.0	356.0	35.0
OPA365AIDBVR	SOT-23	DBV	5	3000	180.0	180.0	18.0
OPA365AIDBVT	SOT-23	DBV	5	250	180.0	180.0	18.0
OPA365AIDR	SOIC	D	8	2500	356.0	356.0	35.0

TUBE

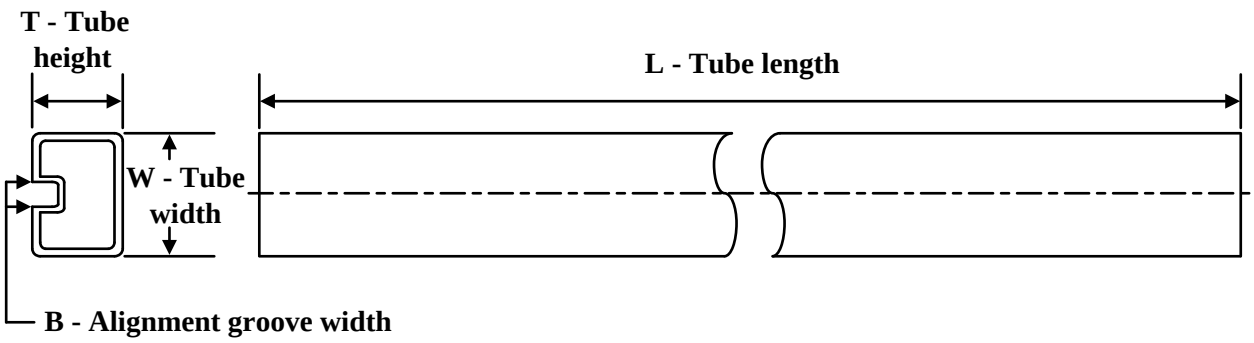

*All dimensions are nominal

Device	Package Name	Package Type	Pins	SPQ	L (mm)	W (mm)	T (µm)	B (mm)
OPA2365AID	D	SOIC	8	75	506.6	8	3940	4.32
OPA2365AIDG4	D	SOIC	8	75	506.6	8	3940	4.32
OPA365AID	D	SOIC	8	75	506.6	8	3940	4.32
OPA365AIDG4	D	SOIC	8	75	506.6	8	3940	4.32