TAPE AND REEL INFORMATION

REEL DIMENSIONS

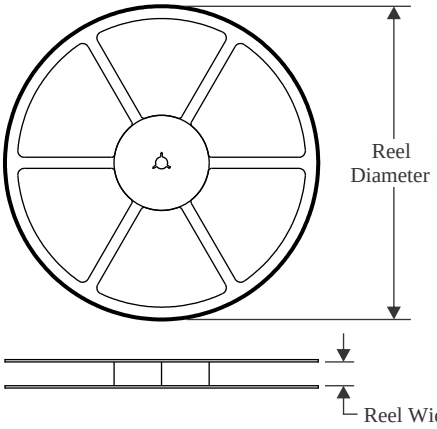

TAPE DIMENSIONS

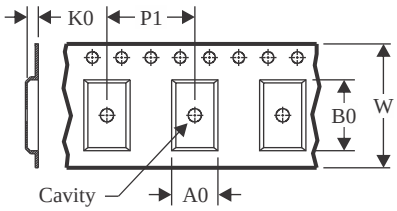

A0	Dimension designed to accommodate the component width
B0	Dimension designed to accommodate the component length
K0	Dimension designed to accommodate the component thickness
W	Overall width of the carrier tape
P1	Pitch between successive cavity centers

QUADRANT ASSIGNMENTS FOR PIN 1 ORIENTATION IN TAPE

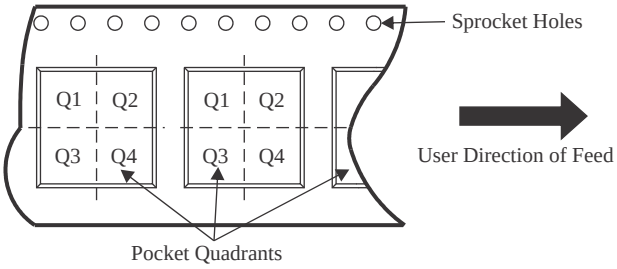

*All dimensions are nominal

Device	Package Type	Package Drawing	Pins	SPQ	Reel Diameter (mm)	Reel Width W1 (mm)	A0 (mm)	B0 (mm)	K0 (mm)	P1 (mm)	W (mm)	Pin1 Quadrant
TLV172IDBVR	SOT-23	DBV	5	3000	180.0	8.4	3.2	3.2	1.4	4.0	8.0	Q3
TLV172IDBVR	SOT-23	DBV	5	3000	180.0	8.4	3.2	3.2	1.4	4.0	8.0	Q3
TLV172IDBVT	SOT-23	DBV	5	250	180.0	8.4	3.2	3.2	1.4	4.0	8.0	Q3
TLV172IDBVT	SOT-23	DBV	5	250	180.0	8.4	3.2	3.2	1.4	4.0	8.0	Q3
TLV172IDCKR	SC70	DCK	5	3000	178.0	9.0	2.4	2.5	1.2	4.0	8.0	Q3
TLV172IDCKT	SC70	DCK	5	250	178.0	9.0	2.4	2.5	1.2	4.0	8.0	Q3
TLV172IDR	SOIC	D	8	2500	330.0	12.4	6.4	5.2	2.1	8.0	12.0	Q1
TLV2172IDGKR	VSSOP	DGK	8	2500	330.0	12.4	5.3	3.4	1.4	8.0	12.0	Q1
TLV2172IDGKT	VSSOP	DGK	8	250	330.0	12.4	5.3	3.4	1.4	8.0	12.0	Q1
TLV2172IDR	SOIC	D	8	2500	330.0	12.4	6.4	5.2	2.1	8.0	12.0	Q1
TLV4172IDR	SOIC	D	14	2500	330.0	16.4	6.5	9.0	2.1	8.0	16.0	Q1
TLV4172IPWR	TSSOP	PW	14	2000	330.0	12.4	6.9	5.6	1.6	8.0	12.0	Q1

TAPE AND REEL BOX DIMENSIONS

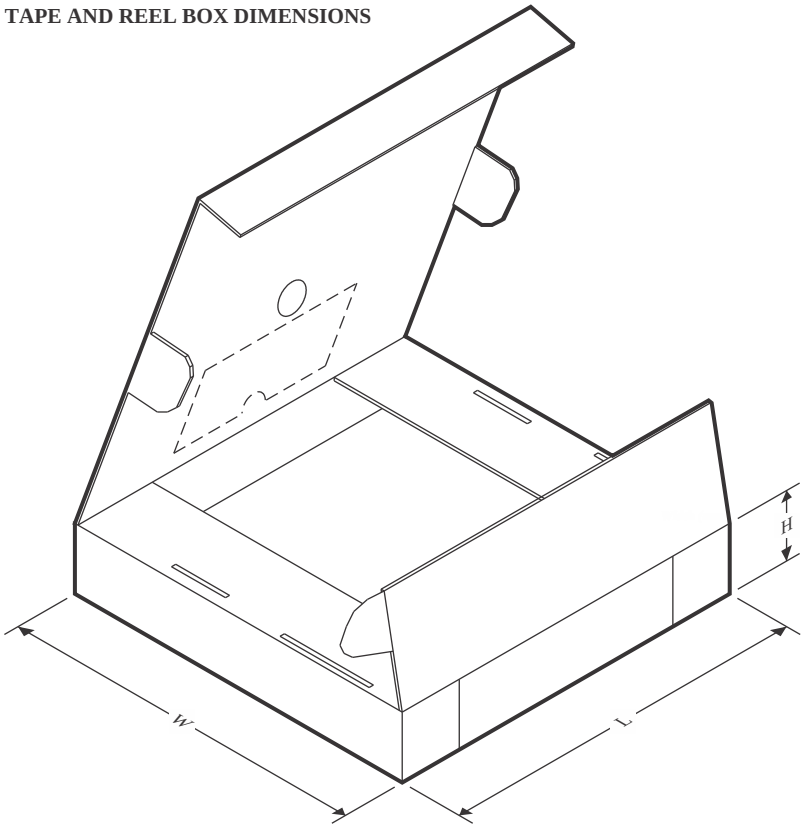

*All dimensions are nominal

Device	Package Type	Package Drawing	Pins	SPQ	Length (mm)	Width (mm)	Height (mm)
TLV172IDBVR	SOT-23	DBV	5	3000	210.0	185.0	35.0
TLV172IDBVR	SOT-23	DBV	5	3000	210.0	185.0	35.0
TLV172IDBVT	SOT-23	DBV	5	250	210.0	185.0	35.0
TLV172IDBVT	SOT-23	DBV	5	250	210.0	185.0	35.0
TLV172IDCKR	SC70	DCK	5	3000	180.0	180.0	18.0
TLV172IDCKT	SC70	DCK	5	250	180.0	180.0	18.0
TLV172IDR	SOIC	D	8	2500	356.0	356.0	35.0
TLV2172IDGKR	VSSOP	DGK	8	2500	356.0	356.0	35.0
TLV2172IDGKT	VSSOP	DGK	8	250	356.0	356.0	35.0
TLV2172IDR	SOIC	D	8	2500	356.0	356.0	35.0
TLV4172IDR	SOIC	D	14	2500	356.0	356.0	35.0
TLV4172IPWR	TSSOP	PW	14	2000	356.0	356.0	35.0