TAPE AND REEL INFORMATION

REEL DIMENSIONS

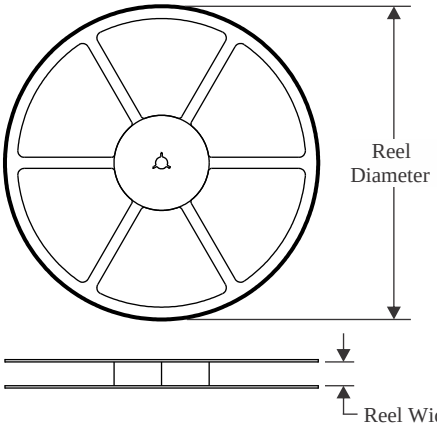

TAPE DIMENSIONS

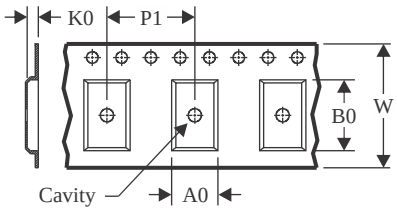

A0	Dimension designed to accommodate the component width
B0	Dimension designed to accommodate the component length
K0	Dimension designed to accommodate the component thickness
W	Overall width of the carrier tape
P1	Pitch between successive cavity centers

QUADRANT ASSIGNMENTS FOR PIN 1 ORIENTATION IN TAPE

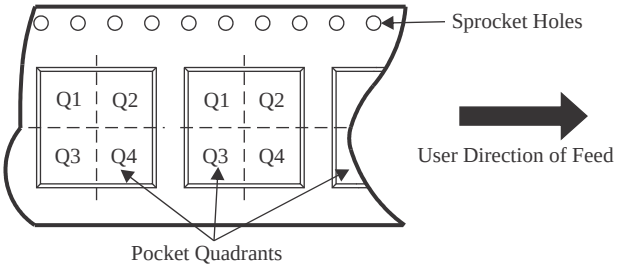

*All dimensions are nominal

Device	Package Type	Package Drawing	Pins	SPQ	Reel Diameter (mm)	Reel Width W1 (mm)	A0 (mm)	B0 (mm)	K0 (mm)	P1 (mm)	W (mm)	Pin1 Quadrant
TLV9020DBVR	SOT-23	DBV	5	3000	180.0	8.4	3.2	3.2	1.4	4.0	8.0	Q3
TLV9020DCKR	SC70	DCK	5	3000	178.0	9.0	2.4	2.5	1.2	4.0	8.0	Q3
TLV9021DBVR	SOT-23	DBV	5	3000	180.0	8.4	3.2	3.2	1.4	4.0	8.0	Q3
TLV9021DCKR	SC70	DCK	5	3000	178.0	9.0	2.4	2.5	1.2	4.0	8.0	Q3
TLV9022DDFR	SOT-23-THIN	DDF	8	3000	180.0	8.4	3.2	3.2	1.4	4.0	8.0	Q3
TLV9022DGKR	VSSOP	DGK	8	2500	330.0	12.4	5.3	3.4	1.4	8.0	12.0	Q1
TLV9022DR	SOIC	D	8	2500	330.0	12.4	6.4	5.2	2.1	8.0	12.0	Q1
TLV9022DSGR	WSON	DSG	8	3000	180.0	8.4	2.3	2.3	1.15	4.0	8.0	Q2
TLV9024DR	SOIC	D	14	3000	330.0	16.4	6.5	9.0	2.1	8.0	16.0	Q1
TLV9024DYYR	SOT-23-THIN	DYY	14	3000	330.0	12.4	4.8	3.6	1.6	8.0	12.0	Q3
TLV9024PWR	TSSOP	PW	14	2000	330.0	12.4	6.9	5.6	1.6	8.0	12.0	Q1
TLV9024PWR	TSSOP	PW	14	2000	330.0	12.4	6.9	5.6	1.6	8.0	12.0	Q1
TLV9024RTER	WQFN	RTE	16	3000	330.0	12.4	3.3	3.3	1.1	8.0	12.0	Q2
TLV9030DBVR	SOT-23	DBV	5	3000	180.0	8.4	3.2	3.2	1.4	4.0	8.0	Q3
TLV9030DCKR	SC70	DCK	5	3000	178.0	9.0	2.4	2.5	1.2	4.0	8.0	Q3

Device	Package Type	Package Drawing	Pins	SPQ	Reel Diameter (mm)	Reel Width W1 (mm)	A0 (mm)	B0 (mm)	K0 (mm)	P1 (mm)	W (mm)	Pin1 Quadrant
TLV9031DBVR	SOT-23	DBV	5	3000	180.0	8.4	3.2	3.2	1.4	4.0	8.0	Q3
TLV9031DCKR	SC70	DCK	5	3000	178.0	9.0	2.4	2.5	1.2	4.0	8.0	Q3
TLV9032DDFR	SOT-23-THIN	DDF	8	3000	180.0	8.4	3.2	3.2	1.4	4.0	8.0	Q3
TLV9032DGKR	VSSOP	DGK	8	2500	330.0	12.4	5.3	3.4	1.4	8.0	12.0	Q1
TLV9032DR	SOIC	D	8	2500	330.0	12.4	6.4	5.2	2.1	8.0	12.0	Q1
TLV9032DSGR	WSON	DSG	8	3000	180.0	8.4	2.3	2.3	1.15	4.0	8.0	Q2
TLV9034DR	SOIC	D	14	3000	330.0	16.4	6.5	9.0	2.1	8.0	16.0	Q1
TLV9034DYYR	SOT-23-THIN	DYY	14	3000	330.0	12.4	4.8	3.6	1.6	8.0	12.0	Q3
TLV9034PWR	TSSOP	PW	14	2000	330.0	12.4	6.9	5.6	1.6	8.0	12.0	Q1
TLV9034RTER	WQFN	RTE	16	3000	330.0	12.4	3.3	3.3	1.1	8.0	12.0	Q2

TAPE AND REEL BOX DIMENSIONS

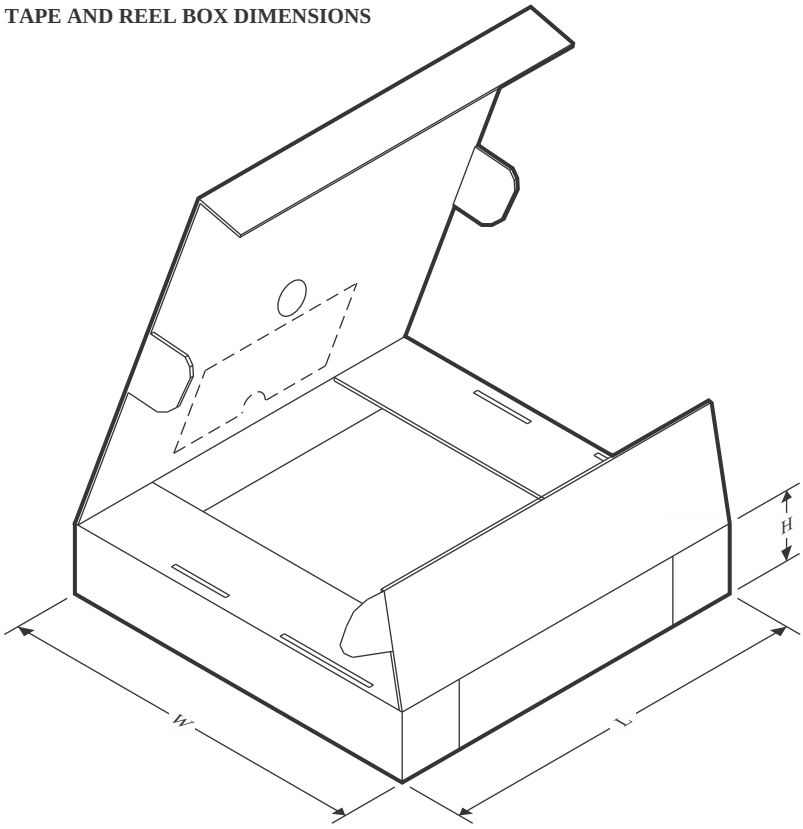

*All dimensions are nominal

Device	Package Type	Package Drawing	Pins	SPQ	Length (mm)	Width (mm)	Height (mm)
TLV9020DBVR	SOT-23	DBV	5	3000	210.0	185.0	35.0
TLV9020DCKR	SC70	DCK	5	3000	180.0	180.0	18.0
TLV9021DBVR	SOT-23	DBV	5	3000	210.0	185.0	35.0
TLV9021DCKR	SC70	DCK	5	3000	180.0	180.0	18.0
TLV9022DDFR	SOT-23-THIN	DDF	8	3000	210.0	185.0	35.0
TLV9022DGKR	VSSOP	DGK	8	2500	366.0	364.0	50.0
TLV9022DR	SOIC	D	8	2500	356.0	356.0	35.0
TLV9022DSGR	WSON	DSG	8	3000	210.0	185.0	35.0
TLV9024DR	SOIC	D	14	3000	356.0	356.0	35.0
TLV9024DYYR	SOT-23-THIN	DYY	14	3000	336.6	336.6	31.8
TLV9024PWR	TSSOP	PW	14	2000	353.0	353.0	32.0
TLV9024PWR	TSSOP	PW	14	2000	356.0	356.0	35.0
TLV9024RTER	WQFN	RTE	16	3000	367.0	367.0	35.0
TLV9030DBVR	SOT-23	DBV	5	3000	210.0	185.0	35.0
TLV9030DCKR	SC70	DCK	5	3000	180.0	180.0	18.0
TLV9031DBVR	SOT-23	DBV	5	3000	210.0	185.0	35.0
TLV9031DCKR	SC70	DCK	5	3000	180.0	180.0	18.0
TLV9032DDFR	SOT-23-THIN	DDF	8	3000	210.0	185.0	35.0

Device	Package Type	Package Drawing	Pins	SPQ	Length (mm)	Width (mm)	Height (mm)
TLV9032DGKR	VSSOP	DGK	8	2500	366.0	364.0	50.0
TLV9032DR	SOIC	D	8	2500	356.0	356.0	35.0
TLV9032DSGR	WSON	DSG	8	3000	210.0	185.0	35.0
TLV9034DR	SOIC	D	14	3000	356.0	356.0	35.0
TLV9034DYYR	SOT-23-THIN	DYY	14	3000	336.6	336.6	31.8
TLV9034PWR	TSSOP	PW	14	2000	356.0	356.0	35.0
TLV9034RTER	WQFN	RTE	16	3000	367.0	367.0	35.0