TAPE AND REEL INFORMATION

REEL DIMENSIONS

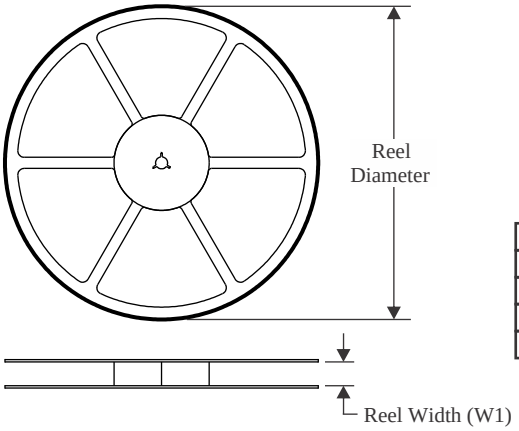

TAPE DIMENSIONS

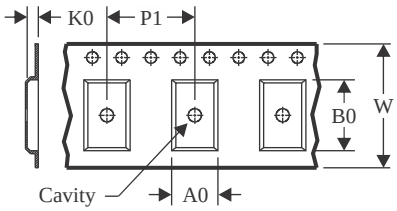

A0	Dimension designed to accommodate the component width
B0	Dimension designed to accommodate the component length
K0	Dimension designed to accommodate the component thickness
W	Overall width of the carrier tape
P1	Pitch between successive cavity centers

QUADRANT ASSIGNMENTS FOR PIN 1 ORIENTATION IN TAPE

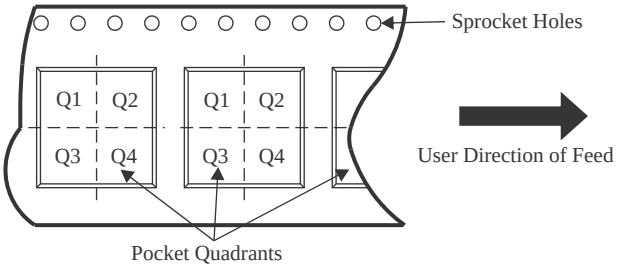

*All dimensions are nominal

Device	Package Type	Package Drawing	Pins	SPQ	Reel Diameter (mm)	Reel Width W1 (mm)	A0 (mm)	B0 (mm)	K0 (mm)	P1 (mm)	W (mm)	Pin1 Quadrant
TMS320F2812GBBAR	NFBGA	GBB	179	1000	330.0	24.4	12.35	12.35	2.3	16.0	24.0	Q1
TMS320F2812ZAYAR	NFBGA	ZAY	179	1000	330.0	24.4	12.35	12.35	2.3	16.0	24.0	Q1

TAPE AND REEL BOX DIMENSIONS

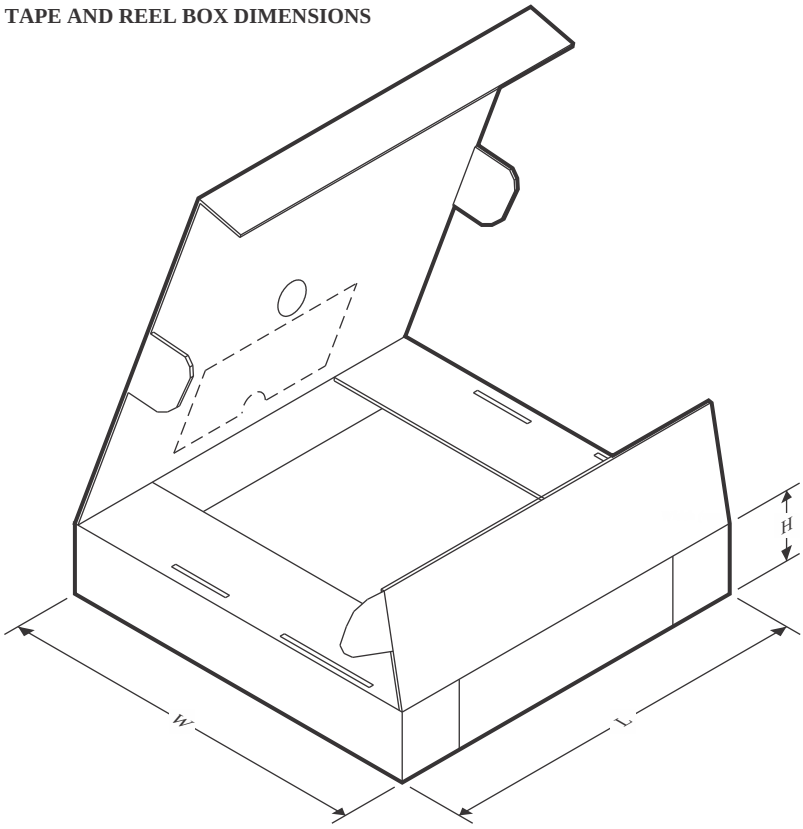

*All dimensions are nominal

Device	Package Type	Package Drawing	Pins	SPQ	Length (mm)	Width (mm)	Height (mm)
TMS320F2812GBBAR	NFBGA	GBB	179	1000	336.6	336.6	41.3
TMS320F2812ZAYAR	NFBGA	ZAY	179	1000	336.6	336.6	41.3

TRAY

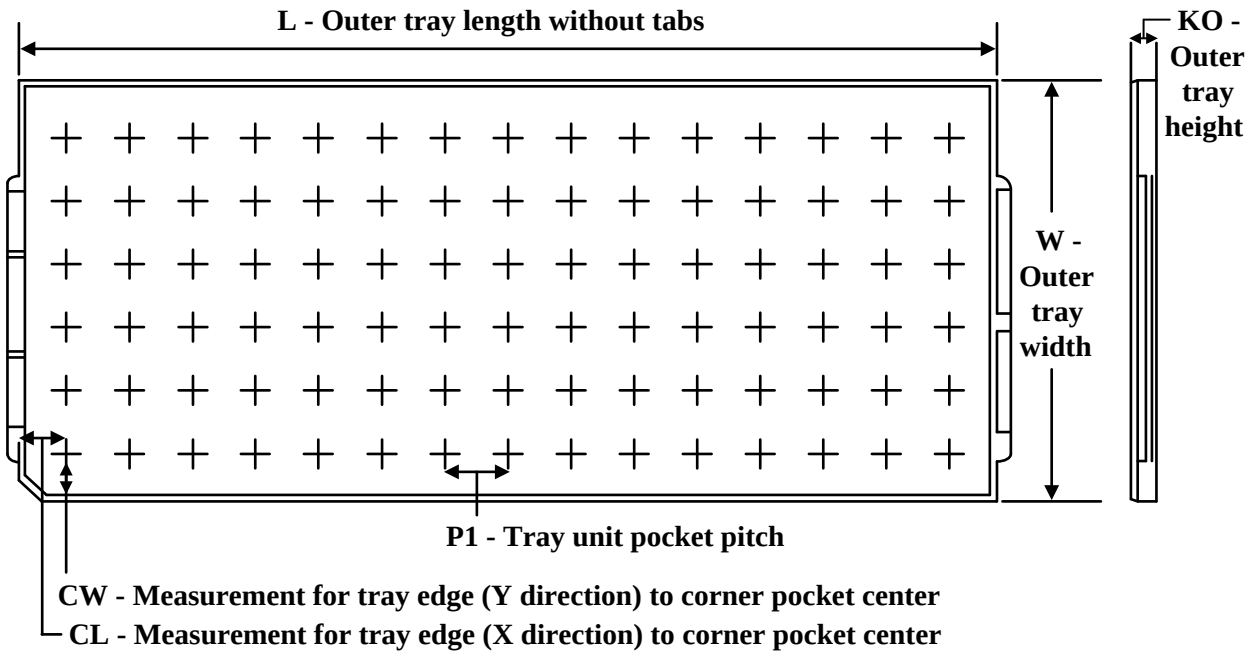

Chamfer on Tray corner indicates Pin 1 orientation of packed units.

*All dimensions are nominal

Device	Package Name	Package Type	Pins	SPQ	Unit array matrix	Max temperature (°C)	L (mm)	W (mm)	K0 (µm)	P1 (mm)	CL (mm)	CW (mm)
TMS320F2810PBKA	PBK	LQFP	128	90	6 x 15	150	315	135.9	7620	20.3	15.4	15.4
TMS320F2810PBKQ	PBK	LQFP	128	90	6 x 15	150	315	135.9	7620	20.3	15.4	15.4
TMS320F2810PBKS	PBK	LQFP	128	90	6 x 15	150	315	135.9	7620	20.3	15.4	15.4
TMS320F2811PBKA	PBK	LQFP	128	90	6 x 15	150	315	135.9	7620	20.3	15.4	15.4
TMS320F2811PBKQ	PBK	LQFP	128	90	6 x 15	150	315	135.9	7620	20.3	15.4	15.4
TMS320F2811PBKS	PBK	LQFP	128	90	6 x 15	150	315	135.9	7620	20.3	15.4	15.4
TMS320F2812GBBA	GBB	NFBGA	179	160	8 x 20	150	315	135.9	7620	15.4	11.2	19.65
TMS320F2812GBBS	GBB	NFBGA	179	160	8 x 20	150	315	135.9	7620	15.4	11.2	19.65
TMS320F2812PGFA	PGF	LQFP	176	40	4x10	150	315	135.9	7620	20.7	30.4	20.7
TMS320F2812PGFAG4	PGF	LQFP	176	40	4x10	150	315	135.9	7620	20.7	30.4	20.7
TMS320F2812PGFQ	PGF	LQFP	176	40	4x10	150	315	135.9	7620	20.7	30.4	20.7
TMS320F2812PGFS	PGF	LQFP	176	40	4x10	150	315	135.9	7620	20.7	30.4	20.7
TMS320F2812ZAYA	ZAY	NFBGA	179	160	8 x 20	150	315	135.9	7620	15.4	11.2	19.65
TMS320F2812ZAYS	ZAY	NFBGA	179	160	8 x 20	150	315	135.9	7620	15.4	11.2	19.65