TAPE AND REEL INFORMATION

REEL DIMENSIONS

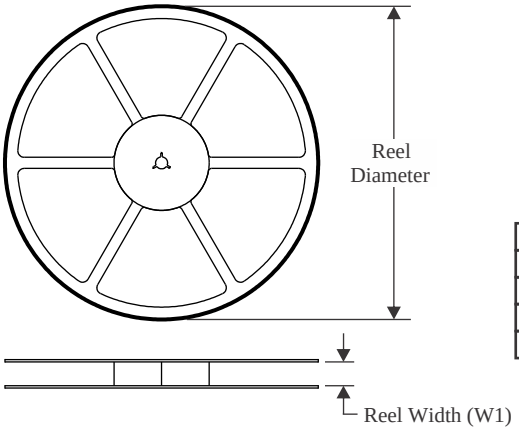

TAPE DIMENSIONS

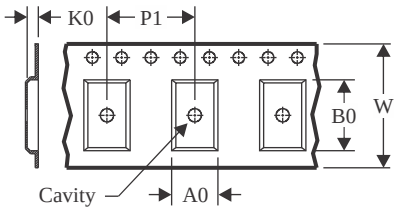

A0	Dimension designed to accommodate the component width
B0	Dimension designed to accommodate the component length
K0	Dimension designed to accommodate the component thickness
W	Overall width of the carrier tape
P1	Pitch between successive cavity centers

QUADRANT ASSIGNMENTS FOR PIN 1 ORIENTATION IN TAPE

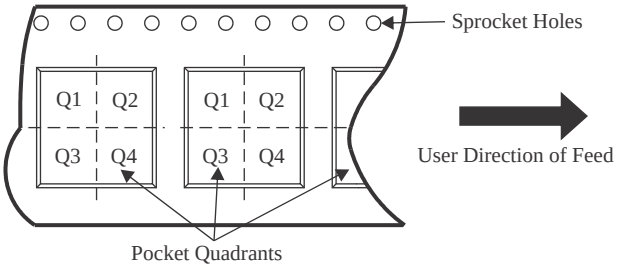

*All dimensions are nominal

Device	Package Type	Package Drawing	Pins	SPQ	Reel Diameter (mm)	Reel Width W1 (mm)	A0 (mm)	B0 (mm)	K0 (mm)	P1 (mm)	W (mm)	Pin1 Quadrant
TPD1E10B06DYARQ1	SOT-5X3	DYA	2	3000	178.0	9.5	0.5	1.94	0.73	2.0	8.0	Q1
TPD1E10B06QDPYRQ1	X1SON	DPY	2	10000	180.0	9.5	0.73	1.13	0.5	2.0	8.0	Q1

TAPE AND REEL BOX DIMENSIONS

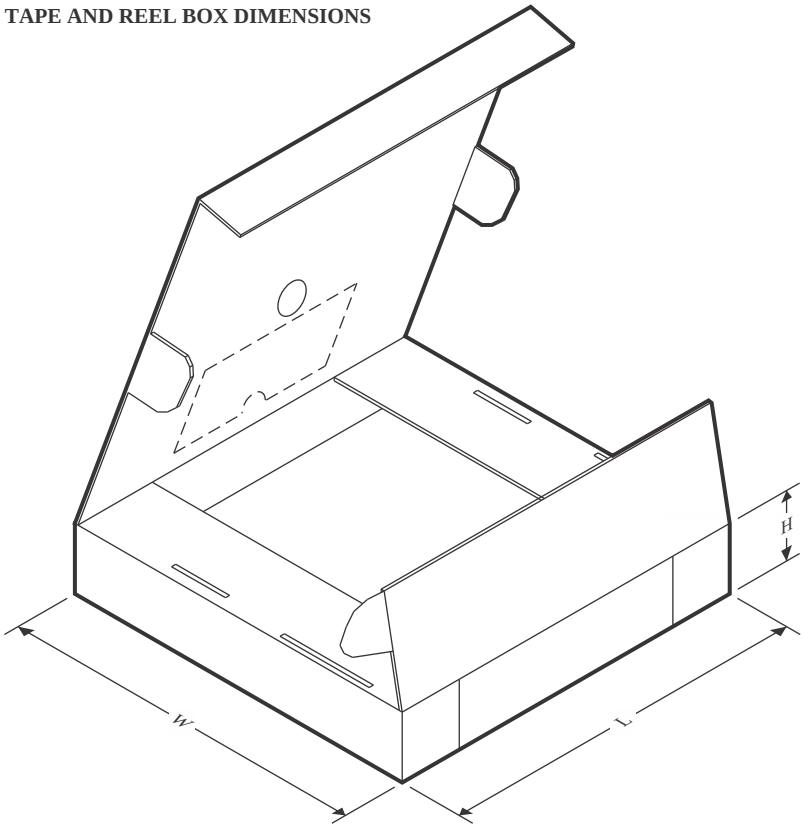

*All dimensions are nominal

Device	Package Type	Package Drawing	Pins	SPQ	Length (mm)	Width (mm)	Height (mm)
TPD1E10B06DYARQ1	SOT-5X3	DYA	2	3000	210.0	200.0	42.0
TPD1E10B06QDPYRQ1	X1SON	DPY	2	10000	189.0	185.0	36.0