TAPE AND REEL INFORMATION

REEL DIMENSIONS

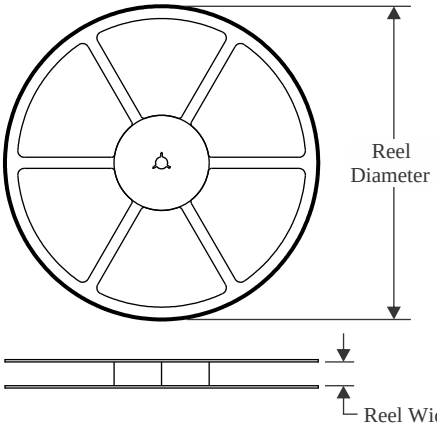

TAPE DIMENSIONS

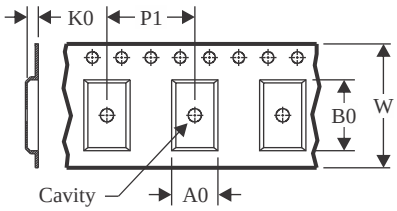

A0	Dimension designed to accommodate the component width
B0	Dimension designed to accommodate the component length
K0	Dimension designed to accommodate the component thickness
W	Overall width of the carrier tape
P1	Pitch between successive cavity centers

QUADRANT ASSIGNMENTS FOR PIN 1 ORIENTATION IN TAPE

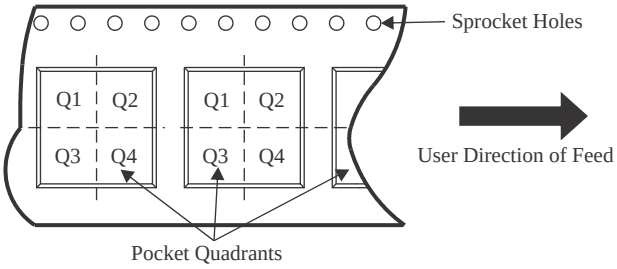

*All dimensions are nominal

Device	Package Type	Package Drawing	Pins	SPQ	Reel Diameter (mm)	Reel Width W1 (mm)	A0 (mm)	B0 (mm)	K0 (mm)	P1 (mm)	W (mm)	Pin1 Quadrant
TPS3820-33DBVR	SOT-23	DBV	5	3000	178.0	9.0	3.3	3.2	1.4	4.0	8.0	Q3
TPS3820-50DBVR	SOT-23	DBV	5	3000	179.0	8.4	3.2	3.2	1.4	4.0	8.0	Q3
TPS3820-50DBVR	SOT-23	DBV	5	3000	178.0	9.0	3.23	3.17	1.37	4.0	8.0	Q3
TPS3823-25DBVR	SOT-23	DBV	5	3000	179.0	8.4	3.2	3.2	1.4	4.0	8.0	Q3
TPS3823-25DBVR	SOT-23	DBV	5	3000	178.0	9.0	3.23	3.17	1.37	4.0	8.0	Q3
TPS3823-30DBVR	SOT-23	DBV	5	3000	178.0	9.0	3.23	3.17	1.37	4.0	8.0	Q3
TPS3823-33DBVR	SOT-23	DBV	5	3000	178.0	9.0	3.23	3.17	1.37	4.0	8.0	Q3
TPS3823-50DBVR	SOT-23	DBV	5	3000	178.0	9.0	3.23	3.17	1.37	4.0	8.0	Q3
TPS3823A-33DBVR	SOT-23	DBV	5	3000	178.0	9.0	3.3	3.2	1.4	4.0	8.0	Q3
TPS3824-25DBVR	SOT-23	DBV	5	3000	178.0	9.0	3.23	3.17	1.37	4.0	8.0	Q3
TPS3824-25DBVR	SOT-23	DBV	5	3000	180.0	8.4	3.2	3.2	1.4	4.0	8.0	Q3
TPS3824-30DBVR	SOT-23	DBV	5	3000	178.0	9.0	3.23	3.17	1.37	4.0	8.0	Q3
TPS3824-30DBVR	SOT-23	DBV	5	3000	180.0	8.4	3.2	3.2	1.4	4.0	8.0	Q3
TPS3824-33DBVR	SOT-23	DBV	5	3000	178.0	9.0	3.23	3.17	1.37	4.0	8.0	Q3
TPS3824-50DBVR	SOT-23	DBV	5	3000	178.0	9.0	3.23	3.17	1.37	4.0	8.0	Q3
TPS3825-33DBVR	SOT-23	DBV	5	3000	178.0	9.0	3.3	3.2	1.4	4.0	8.0	Q3

Device	Package Type	Package Drawing	Pins	SPQ	Reel Diameter (mm)	Reel Width W1 (mm)	A0 (mm)	B0 (mm)	K0 (mm)	P1 (mm)	W (mm)	Pin1 Quadrant
TPS3825-50DBVR	SOT-23	DBV	5	3000	179.0	8.4	3.2	3.2	1.4	4.0	8.0	Q3
TPS3825-50DBVR	SOT-23	DBV	5	3000	178.0	9.0	3.23	3.17	1.37	4.0	8.0	Q3
TPS3828-33DBVR	SOT-23	DBV	5	3000	178.0	9.0	3.23	3.17	1.37	4.0	8.0	Q3
TPS3828-50DBVR	SOT-23	DBV	5	3000	178.0	9.0	3.23	3.17	1.37	4.0	8.0	Q3

TAPE AND REEL BOX DIMENSIONS

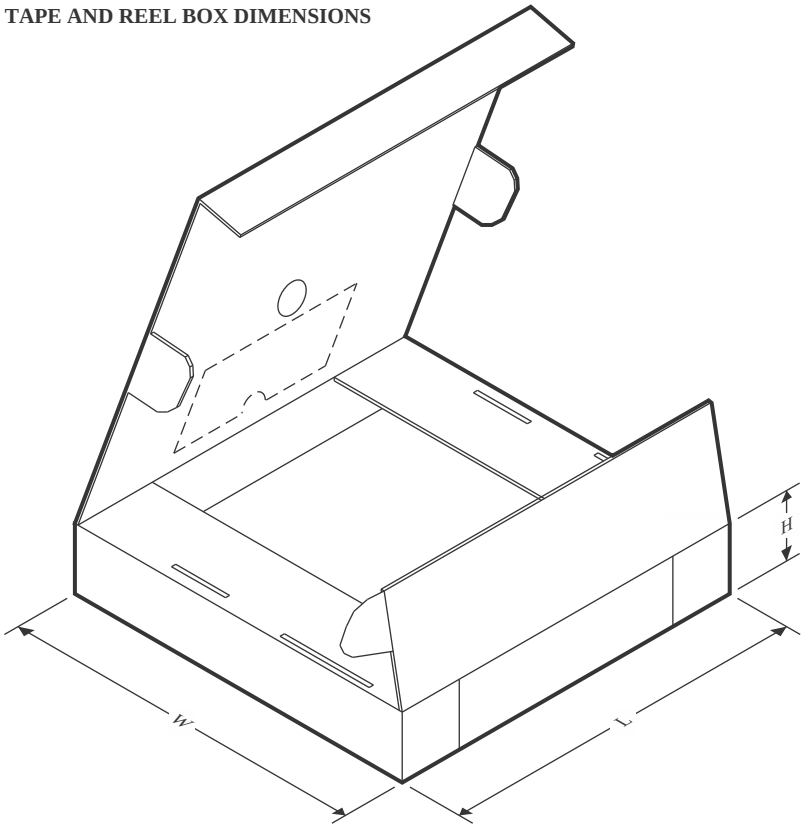

*All dimensions are nominal

Device	Package Type	Package Drawing	Pins	SPQ	Length (mm)	Width (mm)	Height (mm)
TPS3820-33DBVR	SOT-23	DBV	5	3000	180.0	180.0	18.0
TPS3820-50DBVR	SOT-23	DBV	5	3000	200.0	183.0	25.0
TPS3820-50DBVR	SOT-23	DBV	5	3000	180.0	180.0	18.0
TPS3823-25DBVR	SOT-23	DBV	5	3000	203.0	203.0	35.0
TPS3823-25DBVR	SOT-23	DBV	5	3000	180.0	180.0	18.0
TPS3823-30DBVR	SOT-23	DBV	5	3000	180.0	180.0	18.0
TPS3823-33DBVR	SOT-23	DBV	5	3000	180.0	180.0	18.0
TPS3823-50DBVR	SOT-23	DBV	5	3000	180.0	180.0	18.0
TPS3823A-33DBVR	SOT-23	DBV	5	3000	180.0	180.0	18.0
TPS3824-25DBVR	SOT-23	DBV	5	3000	180.0	180.0	18.0
TPS3824-25DBVR	SOT-23	DBV	5	3000	200.0	183.0	25.0
TPS3824-30DBVR	SOT-23	DBV	5	3000	180.0	180.0	18.0
TPS3824-30DBVR	SOT-23	DBV	5	3000	200.0	183.0	25.0
TPS3824-33DBVR	SOT-23	DBV	5	3000	180.0	180.0	18.0
TPS3824-50DBVR	SOT-23	DBV	5	3000	180.0	180.0	18.0
TPS3825-33DBVR	SOT-23	DBV	5	3000	180.0	180.0	18.0
TPS3825-50DBVR	SOT-23	DBV	5	3000	203.0	203.0	35.0
TPS3825-50DBVR	SOT-23	DBV	5	3000	180.0	180.0	18.0

Device	Package Type	Package Drawing	Pins	SPQ	Length (mm)	Width (mm)	Height (mm)
TPS3828-33DBVR	SOT-23	DBV	5	3000	180.0	180.0	18.0
TPS3828-50DBVR	SOT-23	DBV	5	3000	180.0	180.0	18.0