TAPE AND REEL INFORMATION

REEL DIMENSIONS

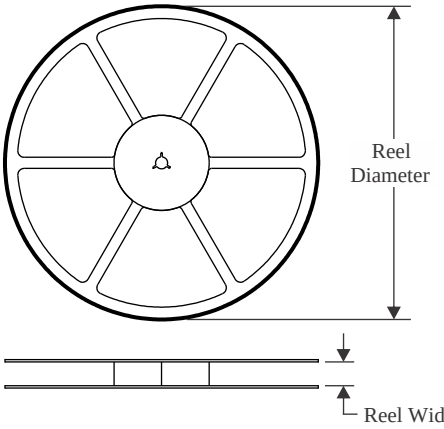

TAPE DIMENSIONS

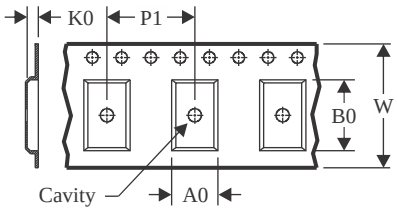

A0	Dimension designed to accommodate the component width
B0	Dimension designed to accommodate the component length
K0	Dimension designed to accommodate the component thickness
W	Overall width of the carrier tape
P1	Pitch between successive cavity centers

QUADRANT ASSIGNMENTS FOR PIN 1 ORIENTATION IN TAPE

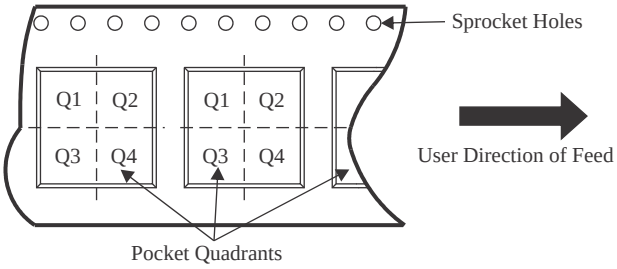

*All dimensions are nominal

Device	Package Type	Package Drawing	Pins	SPQ	Reel Diameter (mm)	Reel Width W1 (mm)	A0 (mm)	B0 (mm)	K0 (mm)	P1 (mm)	W (mm)	Pin1 Quadrant
TPS6208812YFPR	DSBGA	YFP	6	3000	180.0	8.4	0.9	1.3	0.62	4.0	8.0	Q1
TPS6208812YFPT	DSBGA	YFP	6	250	180.0	8.4	0.9	1.3	0.62	4.0	8.0	Q1
TPS6208818YFPR	DSBGA	YFP	6	3000	180.0	8.4	0.9	1.3	0.62	4.0	8.0	Q1
TPS6208818YFPT	DSBGA	YFP	6	250	180.0	8.4	0.9	1.3	0.62	4.0	8.0	Q1
TPS6208833YFPR	DSBGA	YFP	6	3000	180.0	8.4	0.9	1.3	0.62	4.0	8.0	Q1
TPS6208833YFPT	DSBGA	YFP	6	250	180.0	8.4	0.9	1.3	0.62	4.0	8.0	Q1
TPS62088AYFPJ	DSBGA	YFP	6	6000	180.0	8.4	0.89	1.31	0.57	2.0	8.0	Q1
TPS62088AYFPR	DSBGA	YFP	6	3000	180.0	8.4	0.89	1.31	0.57	2.0	8.0	Q1
TPS62088YFPR	DSBGA	YFP	6	3000	180.0	8.4	0.9	1.3	0.62	4.0	8.0	Q1
TPS62088YFPT	DSBGA	YFP	6	250	180.0	8.4	0.9	1.3	0.62	4.0	8.0	Q1
TPS62088YWCR	DSBGA	YWC	6	3000	180.0	8.4	0.95	1.35	0.38	4.0	8.0	Q1
TPS62089AYFPR	DSBGA	YFP	6	3000	180.0	8.4	0.89	1.31	0.57	2.0	8.0	Q1

TAPE AND REEL BOX DIMENSIONS

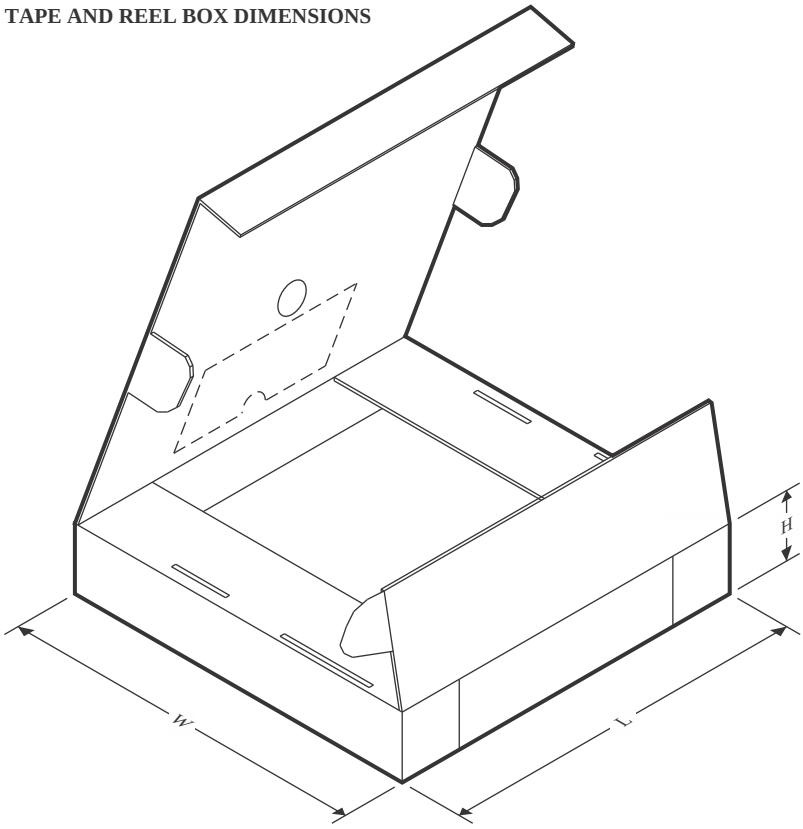

*All dimensions are nominal

Device	Package Type	Package Drawing	Pins	SPQ	Length (mm)	Width (mm)	Height (mm)
TPS6208812YFPR	DSBGA	YFP	6	3000	182.0	182.0	20.0
TPS6208812YFPT	DSBGA	YFP	6	250	182.0	182.0	20.0
TPS6208818YFPR	DSBGA	YFP	6	3000	182.0	182.0	20.0
TPS6208818YFPT	DSBGA	YFP	6	250	182.0	182.0	20.0
TPS6208833YFPR	DSBGA	YFP	6	3000	182.0	182.0	20.0
TPS6208833YFPT	DSBGA	YFP	6	250	182.0	182.0	20.0
TPS62088AYFPJ	DSBGA	YFP	6	6000	182.0	182.0	20.0
TPS62088AYFPR	DSBGA	YFP	6	3000	182.0	182.0	20.0
TPS62088YFPR	DSBGA	YFP	6	3000	182.0	182.0	20.0
TPS62088YFPT	DSBGA	YFP	6	250	182.0	182.0	20.0
TPS62088YWCR	DSBGA	YWC	6	3000	182.0	182.0	20.0
TPS62089AYFPR	DSBGA	YFP	6	3000	182.0	182.0	20.0