TAPE AND REEL INFORMATION

REEL DIMENSIONS

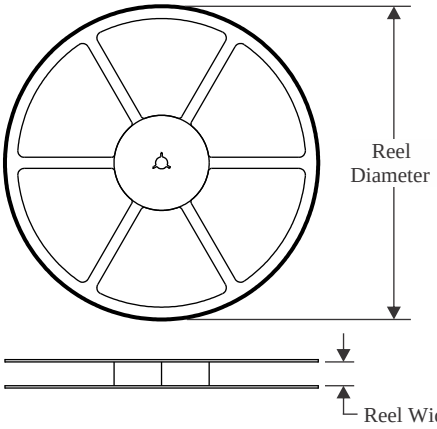

TAPE DIMENSIONS

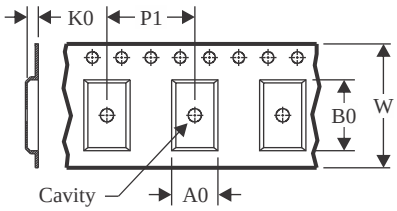

A0	Dimension designed to accommodate the component width
B0	Dimension designed to accommodate the component length
K0	Dimension designed to accommodate the component thickness
W	Overall width of the carrier tape
P1	Pitch between successive cavity centers

QUADRANT ASSIGNMENTS FOR PIN 1 ORIENTATION IN TAPE

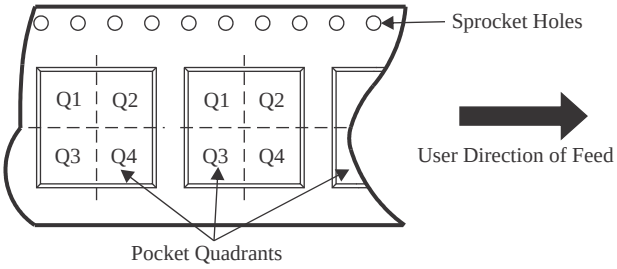

*All dimensions are nominal

Device	Package Type	Package Drawing	Pins	SPQ	Reel Diameter (mm)	Reel Width W1 (mm)	A0 (mm)	B0 (mm)	K0 (mm)	P1 (mm)	W (mm)	Pin1 Quadrant
TPS76901QDBVRG4Q1	SOT-23	DBV	5	3000	180.0	9.0	3.15	3.2	1.4	4.0	8.0	Q3
TPS76901QDBVRM3Q1	SOT-23	DBV	5	3000	180.0	8.4	3.2	3.2	1.4	4.0	8.0	Q3
TPS76901QDBVRQ1	SOT-23	DBV	5	3000	180.0	9.0	3.15	3.2	1.4	4.0	8.0	Q3
TPS76915QDBVRG4Q1	SOT-23	DBV	5	3000	180.0	9.0	3.15	3.2	1.4	4.0	8.0	Q3
TPS76918QDBVRG4Q1	SOT-23	DBV	5	3000	180.0	9.0	3.15	3.2	1.4	4.0	8.0	Q3
TPS76918QDBVRQ1	SOT-23	DBV	5	3000	180.0	9.0	3.15	3.2	1.4	4.0	8.0	Q3
TPS76925QDBVRG4Q1	SOT-23	DBV	5	3000	180.0	9.0	3.15	3.2	1.4	4.0	8.0	Q3
TPS76925QDBVRQ1	SOT-23	DBV	5	3000	180.0	9.0	3.15	3.2	1.4	4.0	8.0	Q3
TPS76927QDBVRG4Q1	SOT-23	DBV	5	3000	180.0	9.0	3.15	3.2	1.4	4.0	8.0	Q3
TPS76928QDBVRG4Q1	SOT-23	DBV	5	3000	180.0	9.0	3.15	3.2	1.4	4.0	8.0	Q3
TPS76930QDBVRG4Q1	SOT-23	DBV	5	3000	180.0	9.0	3.15	3.2	1.4	4.0	8.0	Q3
TPS76930QDBVRQ1	SOT-23	DBV	5	3000	180.0	9.0	3.15	3.2	1.4	4.0	8.0	Q3
TPS76933QDBVRG4Q1	SOT-23	DBV	5	3000	180.0	9.0	3.15	3.2	1.4	4.0	8.0	Q3
TPS76933QDBVRM3Q1	SOT-23	DBV	5	3000	180.0	8.4	3.2	3.2	1.4	4.0	8.0	Q3
TPS76933QDBVRQ1	SOT-23	DBV	5	3000	180.0	9.0	3.15	3.2	1.4	4.0	8.0	Q3
TPS76950QDBVRG4Q1	SOT-23	DBV	5	3000	178.0	9.0	3.3	3.2	1.4	4.0	8.0	Q3

Device	Package Type	Package Drawing	Pins	SPQ	Reel Diameter (mm)	Reel Width W1 (mm)	A0 (mm)	B0 (mm)	K0 (mm)	P1 (mm)	W (mm)	Pin1 Quadrant
TPS76950QDBVRM3Q1	SOT-23	DBV	5	3000	180.0	8.4	3.2	3.2	1.4	4.0	8.0	Q3
TPS76950QDBVRQ1	SOT-23	DBV	5	3000	178.0	9.0	3.3	3.2	1.4	4.0	8.0	Q3

TAPE AND REEL BOX DIMENSIONS

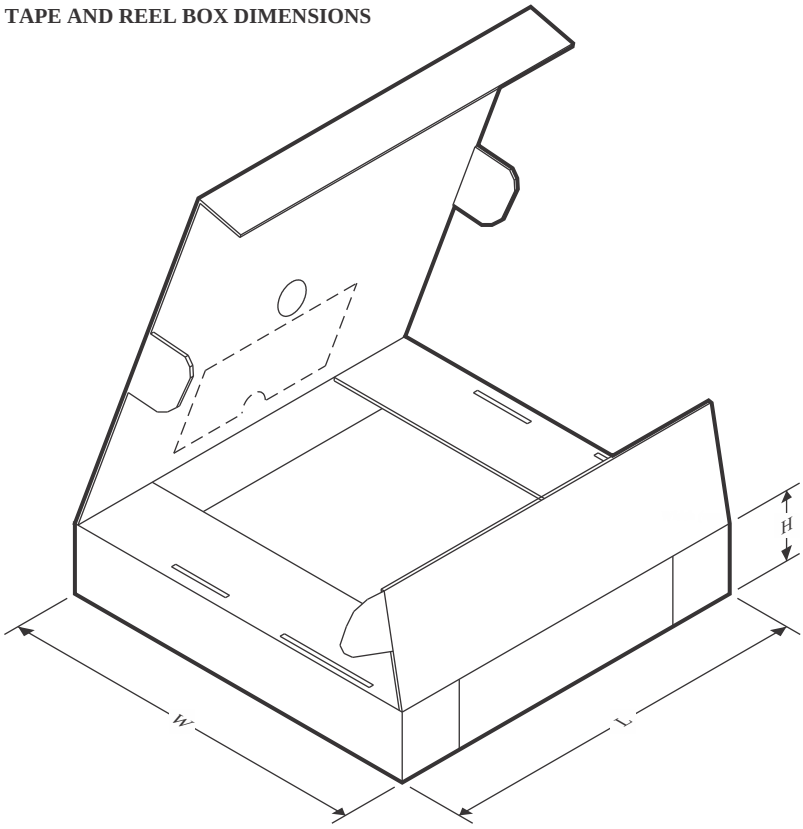

*All dimensions are nominal

Device	Package Type	Package Drawing	Pins	SPQ	Length (mm)	Width (mm)	Height (mm)
TPS76901QDBVRG4Q1	SOT-23	DBV	5	3000	182.0	182.0	20.0
TPS76901QDBVRM3Q1	SOT-23	DBV	5	3000	210.0	185.0	35.0
TPS76901QDBVRQ1	SOT-23	DBV	5	3000	182.0	182.0	20.0
TPS76915QDBVRG4Q1	SOT-23	DBV	5	3000	182.0	182.0	20.0
TPS76918QDBVRG4Q1	SOT-23	DBV	5	3000	182.0	182.0	20.0
TPS76918QDBVRQ1	SOT-23	DBV	5	3000	182.0	182.0	20.0
TPS76925QDBVRG4Q1	SOT-23	DBV	5	3000	182.0	182.0	20.0
TPS76925QDBVRQ1	SOT-23	DBV	5	3000	182.0	182.0	20.0
TPS76927QDBVRG4Q1	SOT-23	DBV	5	3000	182.0	182.0	20.0
TPS76928QDBVRG4Q1	SOT-23	DBV	5	3000	182.0	182.0	20.0
TPS76930QDBVRG4Q1	SOT-23	DBV	5	3000	182.0	182.0	20.0
TPS76930QDBVRQ1	SOT-23	DBV	5	3000	182.0	182.0	20.0
TPS76933QDBVRG4Q1	SOT-23	DBV	5	3000	182.0	182.0	20.0
TPS76933QDBVRM3Q1	SOT-23	DBV	5	3000	210.0	185.0	35.0
TPS76933QDBVRQ1	SOT-23	DBV	5	3000	182.0	182.0	20.0
TPS76950QDBVRG4Q1	SOT-23	DBV	5	3000	180.0	180.0	18.0
TPS76950QDBVRM3Q1	SOT-23	DBV	5	3000	210.0	185.0	35.0
TPS76950QDBVRQ1	SOT-23	DBV	5	3000	180.0	180.0	18.0