TAPE AND REEL INFORMATION

REEL DIMENSIONS

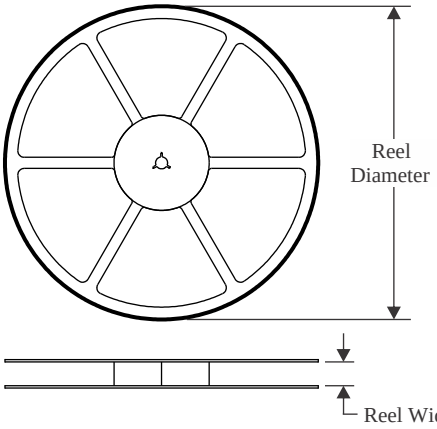

TAPE DIMENSIONS

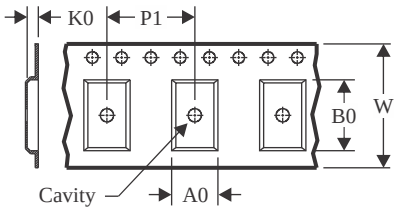

A0	Dimension designed to accommodate the component width
B0	Dimension designed to accommodate the component length
K0	Dimension designed to accommodate the component thickness
W	Overall width of the carrier tape
P1	Pitch between successive cavity centers

QUADRANT ASSIGNMENTS FOR PIN 1 ORIENTATION IN TAPE

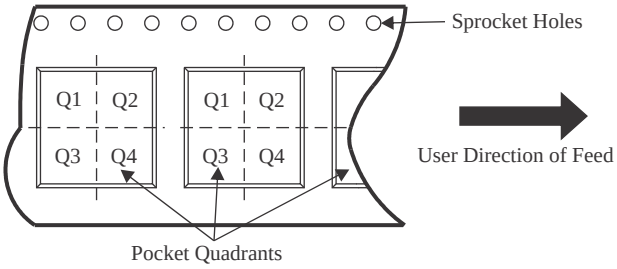

*All dimensions are nominal

Device	Package Type	Package Drawing	Pins	SPQ	Reel Diameter (mm)	Reel Width W1 (mm)	A0 (mm)	B0 (mm)	K0 (mm)	P1 (mm)	W (mm)	Pin1 Quadrant
TPS7A0309PDBVR	SOT-23	DBV	5	3000	180.0	8.4	3.2	3.2	1.4	4.0	8.0	Q3
TPS7A0309PDBVR	SOT-23	DBV	5	3000	180.0	8.4	3.2	3.2	1.4	4.0	8.0	Q3
TPS7A0310PDQNR	X2SON	DQN	4	3000	178.0	8.4	1.13	1.13	0.53	4.0	8.0	Q2
TPS7A0310PDQNR	X2SON	DQN	4	3000	180.0	9.5	1.16	1.16	0.5	4.0	8.0	Q2
TPS7A0312DQNR	X2SON	DQN	4	3000	180.0	8.4	1.16	1.16	0.5	4.0	8.0	Q2
TPS7A0312PDBVR	SOT-23	DBV	5	3000	180.0	8.4	3.2	3.2	1.4	4.0	8.0	Q3
TPS7A0312PDBVR	SOT-23	DBV	5	3000	180.0	8.4	3.2	3.2	1.4	4.0	8.0	Q3
TPS7A0312PDQNR	X2SON	DQN	4	3000	180.0	8.4	1.16	1.16	0.5	4.0	8.0	Q2
TPS7A0312PYCHR	DSBGA	YCH	4	12000	180.0	8.4	0.72	0.72	0.42	2.0	8.0	Q1
TPS7A0313PDBVR	SOT-23	DBV	5	3000	180.0	8.4	3.2	3.2	1.4	4.0	8.0	Q3
TPS7A0313PDBVR	SOT-23	DBV	5	3000	180.0	8.4	3.2	3.2	1.4	4.0	8.0	Q3
TPS7A0315PDBVR	SOT-23	DBV	5	3000	180.0	8.4	3.2	3.2	1.4	4.0	8.0	Q3
TPS7A0315PDBVR	SOT-23	DBV	5	3000	180.0	8.4	3.2	3.2	1.4	4.0	8.0	Q3
TPS7A0315PDQNR	X2SON	DQN	4	3000	178.0	8.4	1.13	1.13	0.53	4.0	8.0	Q2
TPS7A0315PDQNR	X2SON	DQN	4	3000	180.0	9.5	1.16	1.16	0.5	4.0	8.0	Q2
TPS7A0315PDQNR1	X2SON	DQN	4	3000	180.0	8.4	1.16	1.16	0.5	4.0	8.0	Q1

Device	Package Type	Package Drawing	Pins	SPQ	Reel Diameter (mm)	Reel Width W1 (mm)	A0 (mm)	B0 (mm)	K0 (mm)	P1 (mm)	W (mm)	Pin1 Quadrant
TPS7A0315PDQNRM3	X2SON	DQN	4	3000	180.0	8.4	1.16	1.16	0.5	4.0	8.0	Q2
TPS7A03175PYCHR	DSBGA	YCH	4	12000	180.0	8.4	0.72	0.72	0.42	2.0	8.0	Q1
TPS7A03185PDQNR	X2SON	DQN	4	3000	178.0	8.4	1.13	1.13	0.53	4.0	8.0	Q2
TPS7A03185PDQNR	X2SON	DQN	4	3000	180.0	9.5	1.16	1.16	0.5	4.0	8.0	Q2
TPS7A0318DBVR	SOT-23	DBV	5	3000	180.0	8.4	3.2	3.2	1.4	4.0	8.0	Q3
TPS7A0318DQNR	X2SON	DQN	4	3000	180.0	8.4	1.16	1.16	0.5	4.0	8.0	Q2
TPS7A0318PDBVR	SOT-23	DBV	5	3000	180.0	8.4	3.2	3.2	1.4	4.0	8.0	Q3
TPS7A0318PDQNR	X2SON	DQN	4	3000	178.0	8.4	1.13	1.13	0.53	4.0	8.0	Q2
TPS7A0318PDQNR	X2SON	DQN	4	3000	180.0	9.5	1.16	1.16	0.5	4.0	8.0	Q2
TPS7A0318PDQNR1	X2SON	DQN	4	3000	180.0	8.4	1.16	1.16	0.5	4.0	8.0	Q1
TPS7A0318PDQNRM3	X2SON	DQN	4	3000	180.0	8.4	1.16	1.16	0.5	4.0	8.0	Q2
TPS7A0318PYCHR	DSBGA	YCH	4	12000	180.0	8.4	0.72	0.72	0.42	2.0	8.0	Q1
TPS7A0320PDBVR	SOT-23	DBV	5	3000	180.0	8.4	3.2	3.2	1.4	4.0	8.0	Q3
TPS7A0320PDBVR	SOT-23	DBV	5	3000	180.0	8.4	3.2	3.2	1.4	4.0	8.0	Q3
TPS7A0320PDQNR	X2SON	DQN	4	3000	180.0	9.5	1.16	1.16	0.5	4.0	8.0	Q2
TPS7A0320PDQNR	X2SON	DQN	4	3000	178.0	8.4	1.13	1.13	0.53	4.0	8.0	Q2
TPS7A0321PDBVR	SOT-23	DBV	5	3000	180.0	8.4	3.2	3.2	1.4	4.0	8.0	Q3
TPS7A0321PDBVR	SOT-23	DBV	5	3000	180.0	8.4	3.2	3.2	1.4	4.0	8.0	Q3
TPS7A0322DQNR	X2SON	DQN	4	3000	180.0	9.5	1.16	1.16	0.5	4.0	8.0	Q2
TPS7A0322PDBVR	SOT-23	DBV	5	3000	180.0	8.4	3.2	3.2	1.4	4.0	8.0	Q3
TPS7A0322PDBVR	SOT-23	DBV	5	3000	180.0	8.4	3.2	3.2	1.4	4.0	8.0	Q3
TPS7A0322PDQNR	X2SON	DQN	4	3000	180.0	9.5	1.16	1.16	0.5	4.0	8.0	Q2
TPS7A0322PDQNR	X2SON	DQN	4	3000	178.0	8.4	1.13	1.13	0.53	4.0	8.0	Q2
TPS7A0323DBVR	SOT-23	DBV	5	3000	180.0	8.4	3.2	3.2	1.4	4.0	8.0	Q3
TPS7A0323PDBVR	SOT-23	DBV	5	3000	180.0	8.4	3.2	3.2	1.4	4.0	8.0	Q3
TPS7A0323PDBVR	SOT-23	DBV	5	3000	180.0	8.4	3.2	3.2	1.4	4.0	8.0	Q3
TPS7A0323PDQNR	X2SON	DQN	4	3000	180.0	9.5	1.16	1.16	0.5	4.0	8.0	Q2
TPS7A0323PDQNR	X2SON	DQN	4	3000	178.0	8.4	1.13	1.13	0.53	4.0	8.0	Q2
TPS7A0325DQNR	X2SON	DQN	4	3000	180.0	9.5	1.16	1.16	0.5	4.0	8.0	Q2
TPS7A0325DQNR3	X2SON	DQN	4	3000	180.0	9.5	1.16	1.16	0.5	4.0	8.0	Q3
TPS7A0325PDBVR	SOT-23	DBV	5	3000	180.0	8.4	3.2	3.2	1.4	4.0	8.0	Q3
TPS7A0325PDQNR	X2SON	DQN	4	3000	178.0	8.4	1.13	1.13	0.53	4.0	8.0	Q2
TPS7A0325PDQNR	X2SON	DQN	4	3000	180.0	9.5	1.16	1.16	0.5	4.0	8.0	Q2
TPS7A0325PDQNR3	X2SON	DQN	4	3000	180.0	9.5	1.16	1.16	0.5	4.0	8.0	Q3
TPS7A0325PYCHR	DSBGA	YCH	4	12000	180.0	8.4	0.72	0.72	0.42	2.0	8.0	Q1
TPS7A0328DBVR	SOT-23	DBV	5	3000	180.0	8.4	3.2	3.2	1.4	4.0	8.0	Q3
TPS7A0328DQNR	X2SON	DQN	4	3000	180.0	9.5	1.16	1.16	0.5	4.0	8.0	Q2
TPS7A0328PDBVR	SOT-23	DBV	5	3000	180.0	8.4	3.2	3.2	1.4	4.0	8.0	Q3
TPS7A0328PDBVR	SOT-23	DBV	5	3000	180.0	8.4	3.2	3.2	1.4	4.0	8.0	Q3
TPS7A0328PDQNR	X2SON	DQN	4	3000	178.0	8.4	1.13	1.13	0.53	4.0	8.0	Q2
TPS7A0328PDQNR	X2SON	DQN	4	3000	180.0	9.5	1.16	1.16	0.5	4.0	8.0	Q2

Device	Package Type	Package Drawing	Pins	SPQ	Reel Diameter (mm)	Reel Width W1 (mm)	A0 (mm)	B0 (mm)	K0 (mm)	P1 (mm)	W (mm)	Pin1 Quadrant
TPS7A0328PYCHR	DSBGA	YCH	4	12000	180.0	8.4	0.72	0.72	0.42	2.0	8.0	Q1
TPS7A0330PDBVR	SOT-23	DBV	5	3000	180.0	8.4	3.2	3.2	1.4	4.0	8.0	Q3
TPS7A0330PDQNR	X2SON	DQN	4	3000	178.0	8.4	1.13	1.13	0.53	4.0	8.0	Q2
TPS7A0330PDQNR	X2SON	DQN	4	3000	180.0	9.5	1.16	1.16	0.5	4.0	8.0	Q2
TPS7A0330PDQNRM3	X2SON	DQN	4	3000	180.0	8.4	1.16	1.16	0.5	4.0	8.0	Q2
TPS7A0330PYCHR	DSBGA	YCH	4	12000	180.0	8.4	0.72	0.72	0.42	2.0	8.0	Q1
TPS7A0331PDBVR	SOT-23	DBV	5	3000	180.0	8.4	3.2	3.2	1.4	4.0	8.0	Q3
TPS7A0331PDBVR	SOT-23	DBV	5	3000	180.0	8.4	3.2	3.2	1.4	4.0	8.0	Q3
TPS7A0331PDQNR	X2SON	DQN	4	3000	180.0	9.5	1.16	1.16	0.5	4.0	8.0	Q2
TPS7A0331PDQNR	X2SON	DQN	4	3000	178.0	8.4	1.13	1.13	0.53	4.0	8.0	Q2
TPS7A0333DBVR	SOT-23	DBV	5	3000	180.0	8.4	3.2	3.2	1.4	4.0	8.0	Q3
TPS7A0333DQNR	X2SON	DQN	4	3000	180.0	9.5	1.16	1.16	0.5	4.0	8.0	Q2
TPS7A0333PDBVR	SOT-23	DBV	5	3000	180.0	8.4	3.2	3.2	1.4	4.0	8.0	Q3
TPS7A0333PDQNR	X2SON	DQN	4	3000	180.0	9.5	1.16	1.16	0.5	4.0	8.0	Q2
TPS7A0333PDQNR	X2SON	DQN	4	3000	178.0	8.4	1.13	1.13	0.53	4.0	8.0	Q2
TPS7A0333PDQNR3	X2SON	DQN	4	3000	180.0	9.5	1.16	1.16	0.5	4.0	8.0	Q3
TPS7A0333PYCHR	DSBGA	YCH	4	12000	180.0	8.4	0.72	0.72	0.42	2.0	8.0	Q1
TPS7A0336PDBVR	SOT-23	DBV	5	3000	180.0	8.4	3.2	3.2	1.4	4.0	8.0	Q3
TPS7A0350PDBVR	SOT-23	DBV	5	3000	180.0	8.4	3.2	3.2	1.4	4.0	8.0	Q3

TAPE AND REEL BOX DIMENSIONS

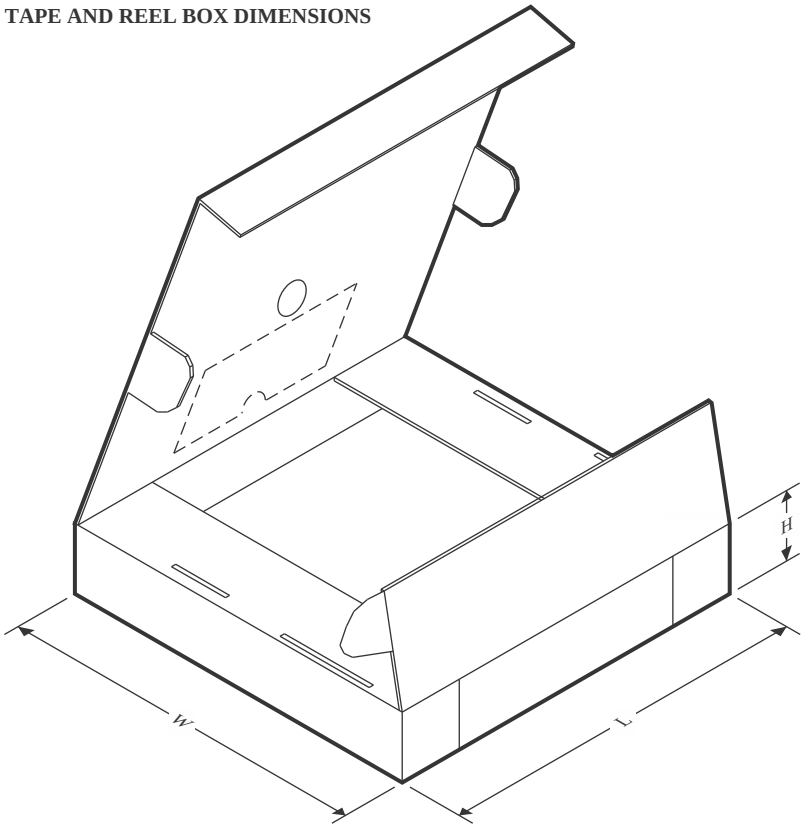

*All dimensions are nominal

Device	Package Type	Package Drawing	Pins	SPQ	Length (mm)	Width (mm)	Height (mm)
TPS7A0309PDBVR	SOT-23	DBV	5	3000	210.0	185.0	35.0
TPS7A0309PDBVR	SOT-23	DBV	5	3000	210.0	185.0	35.0
TPS7A0310PDQNR	X2SON	DQN	4	3000	205.0	200.0	33.0
TPS7A0310PDQNR	X2SON	DQN	4	3000	184.0	184.0	19.0
TPS7A0312DQNR	X2SON	DQN	4	3000	210.0	185.0	35.0
TPS7A0312PDBVR	SOT-23	DBV	5	3000	210.0	185.0	35.0
TPS7A0312PDBVR	SOT-23	DBV	5	3000	210.0	185.0	35.0
TPS7A0312PDQNR	X2SON	DQN	4	3000	210.0	185.0	35.0
TPS7A0312PYCHR	DSBGA	YCH	4	12000	182.0	182.0	20.0
TPS7A0313PDBVR	SOT-23	DBV	5	3000	210.0	185.0	35.0
TPS7A0313PDBVR	SOT-23	DBV	5	3000	210.0	185.0	35.0
TPS7A0315PDBVR	SOT-23	DBV	5	3000	210.0	185.0	35.0
TPS7A0315PDBVR	SOT-23	DBV	5	3000	210.0	185.0	35.0
TPS7A0315PDQNR	X2SON	DQN	4	3000	205.0	200.0	33.0
TPS7A0315PDQNR	X2SON	DQN	4	3000	184.0	184.0	19.0
TPS7A0315PDQNR1	X2SON	DQN	4	3000	210.0	185.0	35.0
TPS7A0315PDQNRM3	X2SON	DQN	4	3000	210.0	185.0	35.0
TPS7A03175PYCHR	DSBGA	YCH	4	12000	182.0	182.0	20.0

Device	Package Type	Package Drawing	Pins	SPQ	Length (mm)	Width (mm)	Height (mm)
TPS7A03185PDQNR	X2SON	DQN	4	3000	205.0	200.0	33.0
TPS7A03185PDQNR	X2SON	DQN	4	3000	184.0	184.0	19.0
TPS7A0318DBVR	SOT-23	DBV	5	3000	210.0	185.0	35.0
TPS7A0318DQNR	X2SON	DQN	4	3000	210.0	185.0	35.0
TPS7A0318PDBVR	SOT-23	DBV	5	3000	210.0	185.0	35.0
TPS7A0318PDQNR	X2SON	DQN	4	3000	205.0	200.0	33.0
TPS7A0318PDQNR	X2SON	DQN	4	3000	184.0	184.0	19.0
TPS7A0318PDQNR1	X2SON	DQN	4	3000	210.0	185.0	35.0
TPS7A0318PDQNRM3	X2SON	DQN	4	3000	210.0	185.0	35.0
TPS7A0318PYCHR	DSBGA	YCH	4	12000	182.0	182.0	20.0
TPS7A0320PDBVR	SOT-23	DBV	5	3000	210.0	185.0	35.0
TPS7A0320PDBVR	SOT-23	DBV	5	3000	210.0	185.0	35.0
TPS7A0320PDQNR	X2SON	DQN	4	3000	184.0	184.0	19.0
TPS7A0320PDQNR	X2SON	DQN	4	3000	205.0	200.0	33.0
TPS7A0321PDBVR	SOT-23	DBV	5	3000	210.0	185.0	35.0
TPS7A0321PDBVR	SOT-23	DBV	5	3000	210.0	185.0	35.0
TPS7A0322DQNR	X2SON	DQN	4	3000	184.0	184.0	19.0
TPS7A0322PDBVR	SOT-23	DBV	5	3000	210.0	185.0	35.0
TPS7A0322PDBVR	SOT-23	DBV	5	3000	210.0	185.0	35.0
TPS7A0322PDQNR	X2SON	DQN	4	3000	184.0	184.0	19.0
TPS7A0322PDQNR	X2SON	DQN	4	3000	205.0	200.0	33.0
TPS7A0323DBVR	SOT-23	DBV	5	3000	210.0	185.0	35.0
TPS7A0323PDBVR	SOT-23	DBV	5	3000	210.0	185.0	35.0
TPS7A0323PDBVR	SOT-23	DBV	5	3000	210.0	185.0	35.0
TPS7A0323PDQNR	X2SON	DQN	4	3000	184.0	184.0	19.0
TPS7A0323PDQNR	X2SON	DQN	4	3000	205.0	200.0	33.0
TPS7A0325DQNR	X2SON	DQN	4	3000	184.0	184.0	19.0
TPS7A0325DQNR3	X2SON	DQN	4	3000	184.0	184.0	19.0
TPS7A0325PDBVR	SOT-23	DBV	5	3000	210.0	185.0	35.0
TPS7A0325PDQNR	X2SON	DQN	4	3000	205.0	200.0	33.0
TPS7A0325PDQNR	X2SON	DQN	4	3000	184.0	184.0	19.0
TPS7A0325PDQNR3	X2SON	DQN	4	3000	184.0	184.0	19.0
TPS7A0325PYCHR	DSBGA	YCH	4	12000	182.0	182.0	20.0
TPS7A0328DBVR	SOT-23	DBV	5	3000	210.0	185.0	35.0
TPS7A0328DQNR	X2SON	DQN	4	3000	184.0	184.0	19.0
TPS7A0328PDBVR	SOT-23	DBV	5	3000	210.0	185.0	35.0
TPS7A0328PDBVR	SOT-23	DBV	5	3000	210.0	185.0	35.0
TPS7A0328PDQNR	X2SON	DQN	4	3000	205.0	200.0	33.0
TPS7A0328PDQNR	X2SON	DQN	4	3000	184.0	184.0	19.0
TPS7A0328PYCHR	DSBGA	YCH	4	12000	182.0	182.0	20.0
TPS7A0330PDBVR	SOT-23	DBV	5	3000	210.0	185.0	35.0
TPS7A0330PDQNR	X2SON	DQN	4	3000	205.0	200.0	33.0
TPS7A0330PDQNR	X2SON	DQN	4	3000	184.0	184.0	19.0

Device	Package Type	Package Drawing	Pins	SPQ	Length (mm)	Width (mm)	Height (mm)
TPS7A0330PDQNRM3	X2SON	DQN	4	3000	210.0	185.0	35.0
TPS7A0330PYCHR	DSBGA	YCH	4	12000	182.0	182.0	20.0
TPS7A0331PDBVR	SOT-23	DBV	5	3000	210.0	185.0	35.0
TPS7A0331PDBVR	SOT-23	DBV	5	3000	210.0	185.0	35.0
TPS7A0331PDQNR	X2SON	DQN	4	3000	184.0	184.0	19.0
TPS7A0331PDQNR	X2SON	DQN	4	3000	205.0	200.0	33.0
TPS7A0333DBVR	SOT-23	DBV	5	3000	210.0	185.0	35.0
TPS7A0333DQNR	X2SON	DQN	4	3000	184.0	184.0	19.0
TPS7A0333PDBVR	SOT-23	DBV	5	3000	210.0	185.0	35.0
TPS7A0333PDQNR	X2SON	DQN	4	3000	184.0	184.0	19.0
TPS7A0333PDQNR	X2SON	DQN	4	3000	205.0	200.0	33.0
TPS7A0333PDQNR3	X2SON	DQN	4	3000	184.0	184.0	19.0
TPS7A0333PYCHR	DSBGA	YCH	4	12000	182.0	182.0	20.0
TPS7A0336PDBVR	SOT-23	DBV	5	3000	210.0	185.0	35.0
TPS7A0350PDBVR	SOT-23	DBV	5	3000	210.0	185.0	35.0