TAPE AND REEL INFORMATION

REEL DIMENSIONS

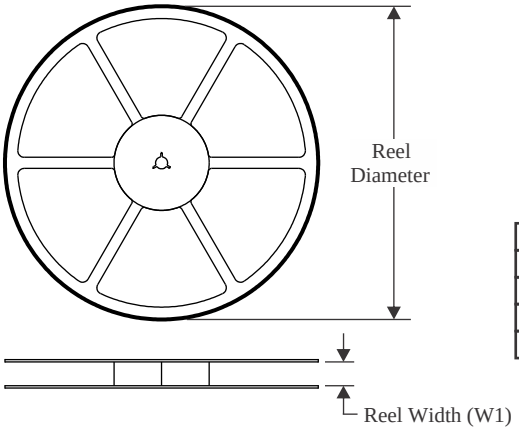

TAPE DIMENSIONS

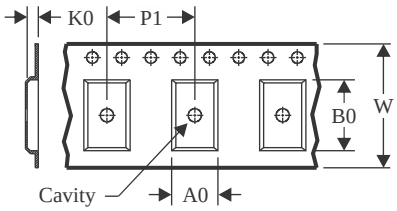

A0	Dimension designed to accommodate the component width
B0	Dimension designed to accommodate the component length
K0	Dimension designed to accommodate the component thickness
W	Overall width of the carrier tape
P1	Pitch between successive cavity centers

QUADRANT ASSIGNMENTS FOR PIN 1 ORIENTATION IN TAPE

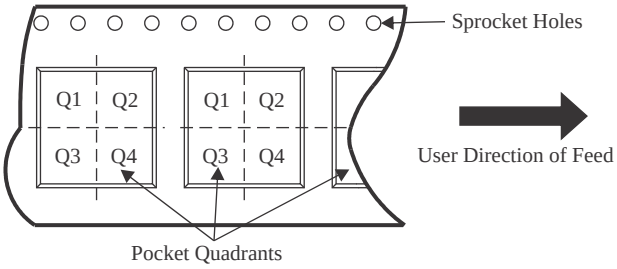

*All dimensions are nominal

Device	Package Type	Package Drawing	Pins	SPQ	Reel Diameter (mm)	Reel Width W1 (mm)	A0 (mm)	B0 (mm)	K0 (mm)	P1 (mm)	W (mm)	Pin1 Quadrant
TPSM82864AA0HRDMR	B0QFN	RDM	23	3000	330.0	17.6	3.8	4.3	2.0	8.0	12.0	Q1
TPSM82864AA0SRDJR	B0QFN	RDJ	23	3000	330.0	17.6	3.8	4.3	2.0	8.0	12.0	Q1
TPSM82866AA0HRDMR	B0QFN	RDM	23	3000	330.0	17.6	3.8	4.3	2.0	8.0	12.0	Q1
TPSM82866AA0SRDJR	B0QFN	RDJ	23	3000	330.0	17.6	3.8	4.3	2.0	8.0	12.0	Q1

TAPE AND REEL BOX DIMENSIONS

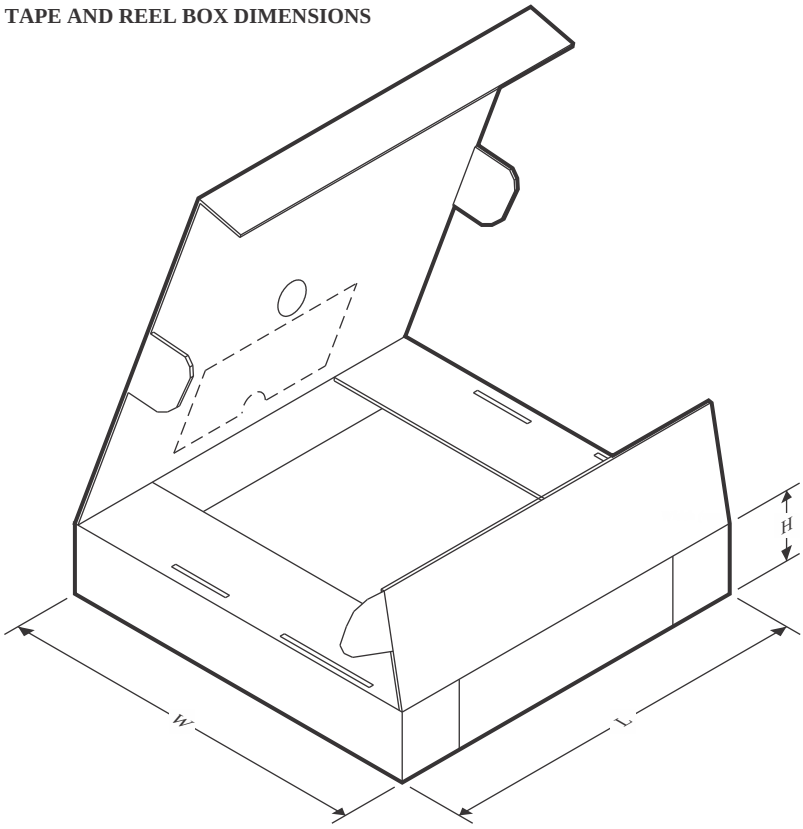

*All dimensions are nominal

Device	Package Type	Package Drawing	Pins	SPQ	Length (mm)	Width (mm)	Height (mm)
TPSM82864AA0HRDMR	B0QFN	RDM	23	3000	336.0	336.0	48.0
TPSM82864AA0SRDJR	B0QFN	RDJ	23	3000	336.0	336.0	48.0
TPSM82866AA0HRDMR	B0QFN	RDM	23	3000	336.0	336.0	48.0
TPSM82866AA0SRDJR	B0QFN	RDJ	23	3000	336.0	336.0	48.0