TAPE AND REEL INFORMATION

REEL DIMENSIONS

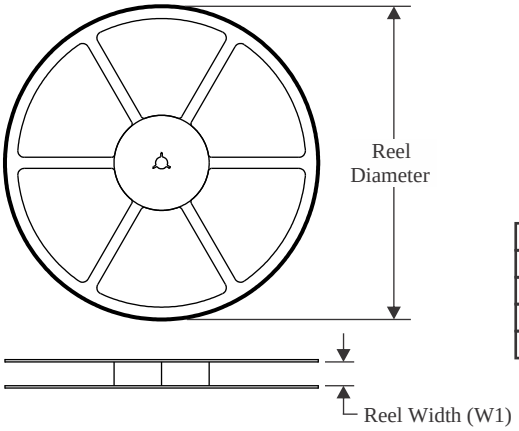

TAPE DIMENSIONS

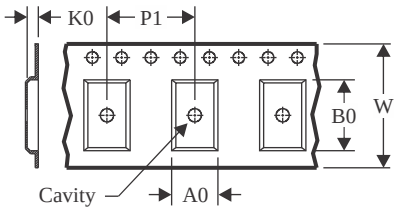

A0	Dimension designed to accommodate the component width
B0	Dimension designed to accommodate the component length
K0	Dimension designed to accommodate the component thickness
W	Overall width of the carrier tape
P1	Pitch between successive cavity centers

QUADRANT ASSIGNMENTS FOR PIN 1 ORIENTATION IN TAPE

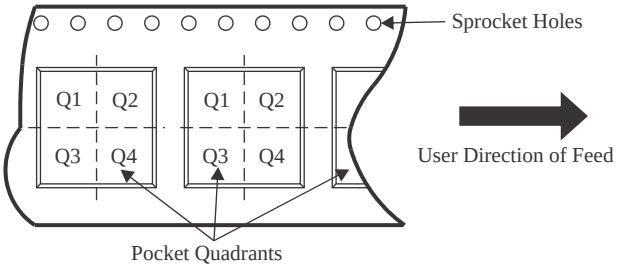

*All dimensions are nominal

Device	Package Type	Package Drawing	Pins	SPQ	Reel Diameter (mm)	Reel Width W1 (mm)	A0 (mm)	B0 (mm)	K0 (mm)	P1 (mm)	W (mm)	Pin1 Quadrant
WL1807MODGIMOCR	QFM	MOC	100	1200	330.0	24.4	13.8	13.8	2.5	20.0	24.0	Q1
WL1807MODGIMOCT	QFM	MOC	100	250	330.0	24.4	13.8	13.8	2.5	20.0	24.0	Q1
WL1837MODGIMOCR	QFM	MOC	100	1200	330.0	24.4	13.8	13.8	2.5	20.0	24.0	Q1
WL1837MODGIMOCT	QFM	MOC	100	250	330.0	24.4	13.8	13.8	2.5	20.0	24.0	Q1

TAPE AND REEL BOX DIMENSIONS

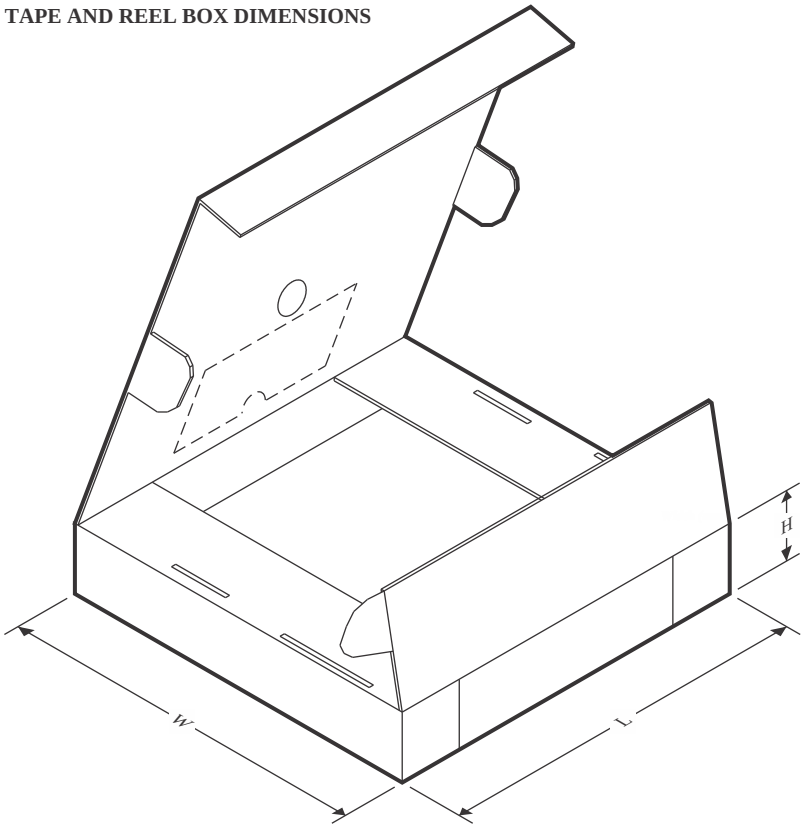

*All dimensions are nominal

Device	Package Type	Package Drawing	Pins	SPQ	Length (mm)	Width (mm)	Height (mm)
WL1807MODGIMOCR	QFM	MOC	100	1200	367.0	367.0	55.0
WL1807MODGIMOCT	QFM	MOC	100	250	367.0	367.0	55.0
WL1837MODGIMOCR	QFM	MOC	100	1200	367.0	367.0	55.0
WL1837MODGIMOCT	QFM	MOC	100	250	367.0	367.0	55.0