Texas Instruments Incorporated

Texas instruments HPA □ 27715 Diehl Road □ Warrenville, IL 60555 □ Tel. 630/393-6901 □ Fax 630/393-6530

Tomahawk (16) DSP Power Design (Initial)

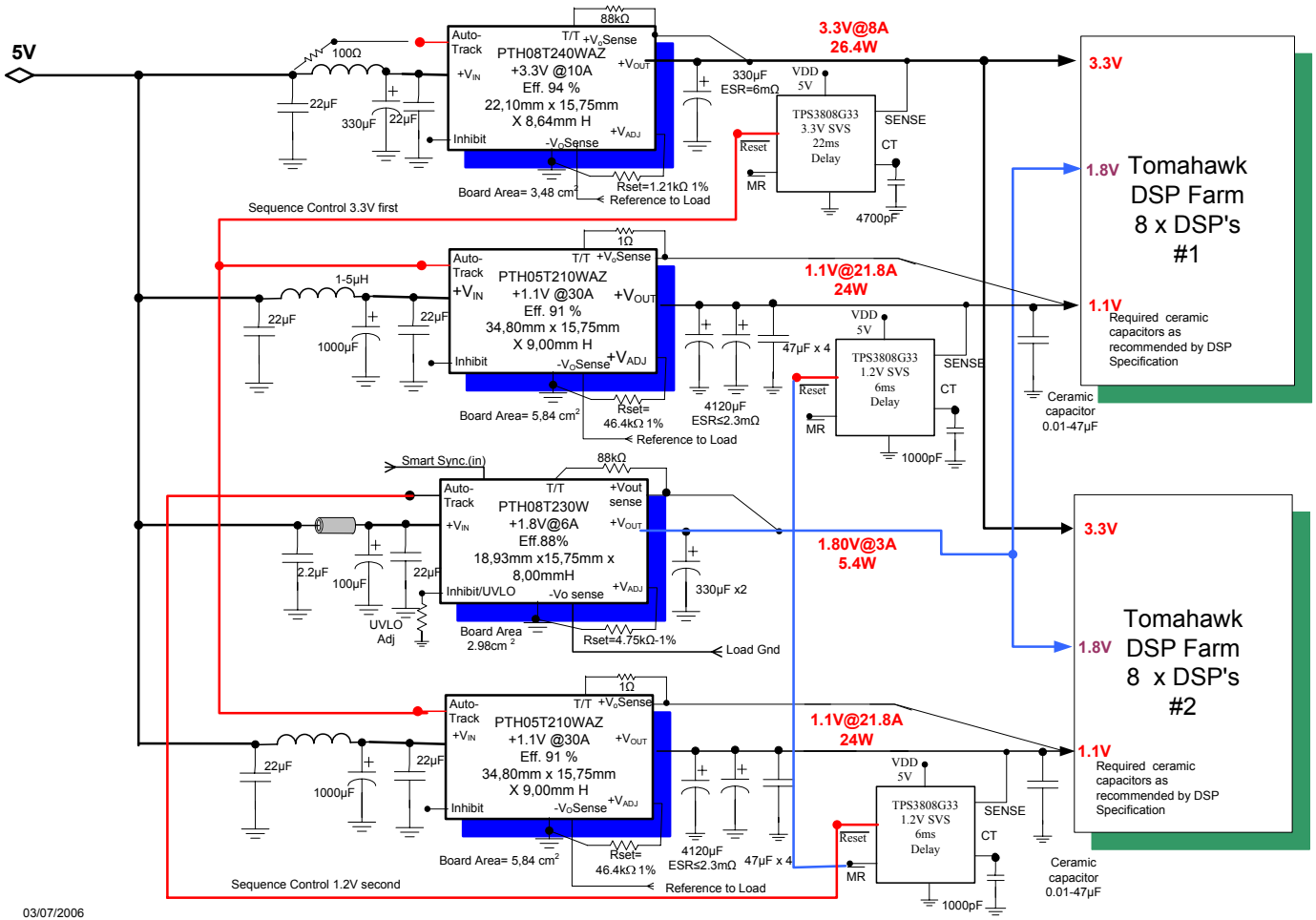

03/07/2006
Texas Instruments
Tom Guerin
Tguerin @ti.com